POOR LEGIBILITY

ONE OR MORE PAGES IN THIS DOCUMENT ARE DIFFICULT TO READ
DUE TO THE QUALITY OF THE ORIGINAL

SFUND RECORDS CTR
2159742

Shell Oil Company's Response to Request for Information Pursuant to CERCLA Section 104(e) Del Amo Facility Superfund Site March 7, 2008

EXHIBIT F

Industrial Waste Treatment and Disposal . . . AT THE GOVERNMENT SYNTHETIC RUBBER PLANTS, LOS ANGELES COUNTY, CALIF.

The government synthetic rubber plants in the Los Angeles area were faced with many difficult waste-disposal problems because of high population density and consequent low tolerance for disposal of liquid, gaseous, and solid wastes. Disposal methods currently in use were evolved during the 10-year period the plants have been in existence. All major waste-disposal problems have been solved through close cooperation between the managements of the four synthetic rubber plants and the regulatory agencies in planning and operating treatment and disposal facilities. Unusual problems involving waste tar, copper solutions, the smokeless incineration of rubber, and subsonic vibrations have also been dealt with successfully.

ARTHUR E. MARTIN[1]

Shell Chemical Corp., Los Angeles, Calif.

ROYAL E. ROSTENBACH[2]

Reconstruction Finance Corp., Washington, D. C.

INDUSTRIAL waste disposal in Los Angeles County is complicated by a high population density, a shortage of underground water supplies, and frequent temperature inversions in the atmosphere. Because of these conditions, the tolerance for disposal of liquid, gaseous, and solid wastes is low. Disposal of liquid wastes in Los Angeles County is related closely to the disposal of solid and gaseous wastes. Numerous restrictions, based on the principle that the disposal method shall not create a hazard or nuisance or cause damage, limit the possibilities for disposal.

During the years of operation of the synthetic rubber plants, process modifications have been made, and, there have been changes in the public pollution-control programs at the local, state, and federal levels. In so far as possible, the problems arising from these changes have been solved by process adjustments or by the installation of additional equipment to serve the unit producing the waste. Otherwise, modifications have been made in industrial waste treatment and disposal to meet the changing conditions. The purpose has been to provide reasonable and practical safeguards against pollution of Dominguez Channel, Los Angeles Harbor, and coastal waters of the Pacific Ocean by liquid wastes originating in the synthetic rubber plants.

The fundamental treatment facilities for industrial wastes of the government synthetic rubber plants (*2, 3*) have remained essentially unchanged. Separable oil and suspended solids are removed by settling basins. Neutralization is accomplished by mixing the various liquid wastes together or adding caustic or acid. A further reduction in oil and suspended solids is gained by filtration of the wastes through hay. Wastes which cannot be rendered nonobjectionable by settling, neutralizing, or filtration through hay can usually be treated more effectively and economically at the source, where the volume is at a minimum and the concentration at a maximum.

The original synthetic rubber plants in Los Angeles County—three butadiene plants, one styrene plant, and two GR-S plants—were placed in operation in June and July 1943. From 1947 to 1949 all except the styrene plant were shut down, but late in 1950 three plants were returned to operation. Table I lists the four plants by types, capacity, and watersheds involved in their operations.

[1] Present address, P.O. Box 211, Torrance, Calif.

[2] Present address, Hanford Atomic Products Operation, General Electric Co., Richland, Wash.

DISCHARGE OF TREATED WASTES

The managements of the group of plants (hereafter called the Los Angeles plants) on Vermont Avenue and Figueroa Street and Knox Street cooperated with authorities in planning and operating their waste-disposal facilities. The waste from the operations was first treated in waste-treatment units at each plant and discharged into a common drain (the Knox Street drain) and hence into the Dominguez Channel at Knox and Main Streets. In 1944 it was decided to install a spills skimming unit and a long concrete outfall pipe to Dominguez Channel (Figure 1). The work was completed in 1945 at a cost of approximately $85,000. The purpose of the skimming unit was an insurance against accidental release of oil and floating material which escapes the primary and secondary treatment units of the plants. The long concrete pipe extending beyond Main Street was installed solely for the purpose of diverting the waste water below an area originally designated as a park, and refuge and lagoon for the protection of wild life. The skimming unit still serves its original purpose. By 1948 the area protected by the pipeline had become a trash and refuse dump as a part of the smog elimination program.

Dominguez Channel is primarily a flood-control channel. In normal times it serves as an industrial waste drain for the area. The course of the channel is generally southeast, flowing from Lagunas de los Dominguez near the Los Angeles rubber plants to Sepulveda Boulevard and Alameda Streets and then in a southerly direction to the East Basin of the Los Angeles Harbor. The course is approximately 6.5 miles. The channel has been used as an industrial waste drain for a number of years.

On November 29, 1945, the County granted a permit to the Los Angeles plants to discharge treated liquid waste into Dominguez Channel. It was stipulated in the permit that the effluent should not create any of the following conditions:

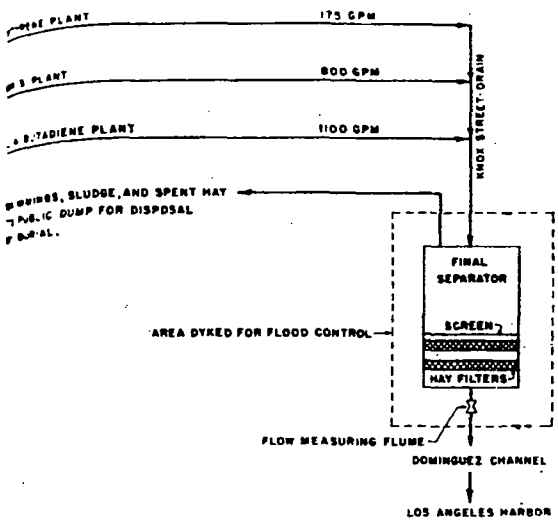

Figure 1. Knox Street Drain and Skimming Unit at Dominguez Channel

objectionable deposits of sludge or other materials in Dominguez Channel.

Concentration of toxic wastes in sufficient quantity to endanger public health, or to affect the use of lands in the vicinity for cattle raising or other agricultural purposes.

Creation of odors to the extent that they are a public nuisance.

Discharge of oil, grease, waxes, and fats in such quantity as to create a nuisance or menace to the public safety.

Pollution of ground water to the extent that its usefulness is impaired.

Damage to public or private structures or property.

Decided coloration.

The following standards were established, with the understanding that they are subject to change in the light of experience.

1. Settleable solids, in general, not to exceed 1.0 ml. per liter.
2. Oil, grease, fats, and waxes, not to exceed 25 mg. per liter.
3. Garbage or domestic sewage, none.
4. Acidity and alkalinity, pH 6.5 to 10.0.
5. Toxic ingredients (cyanides, phenols, metallic salts, etc.), less than toxic concentration.
6. Temperature, not to exceed 140° F.

A standard applied subsequently stipulated that the sulfide content should not exceed 1.0 p.p.m.

Difficulty with suspended solids was experienced up to the joint shutdowns of 1947. The pH of the combined streams from the Los Angeles plants differed sufficiently from the tributary streams to cause aluminum hydroxide and iron hydroxide to precipitate in the Knox Street drain. Consequently, effluent discharged to Dominguez Channel frequently exceeded the specified maximum of 1.0 ml. per liter. Some of the floc precipitated in zones of slow flow in the upper end of the channel, but remained sufficiently fluid to be carried away whenever the flow was increased by higher drainage rates or storm water. At the time the plants were reactivated in 1950, no visible floc deposits remained. Following reactivation, iron salts were eliminated from the effluent as described below. Improved pH control at the plants contributing aluminum salts decreased the quantity of aluminum hydroxide floc formed in the combined stream in the Knox Street drain to the extent that the specified maximum of 1.0 ml. per liter of settleable solids is met at nearly all times.

The oil specification of 25 mg. per liter maximum has been exceeded at times, chiefly because of the characteristics of one waste stream. This stream is produced continuously at a rate of 400 gallons per minute, or approximately 20% of the total flow entering the Knox Street drain. The entire stream enters the treatment unit as a water-oil emulsion, and is passed upward through a sand bed 4 feet thick to coalesce the oil, and thence to a standard API gravity separator. Because of unknown factors, oil removal is not equally effective at all times. Although the search continues, a reasonably economical and effective method for oil removal has not yet been found.

The requirement of no garbage or domestic sewage has been met at all times by the plants, through use of separate sanitary sewer systems as indicated on the flow diagrams. During one brief period in 1946, however, garbage coming from a goose ranch situated on the north side of the open section of the Knox Street drain was found in the Knox Street basin. When it was explained to the rancher that county regulations did not permit

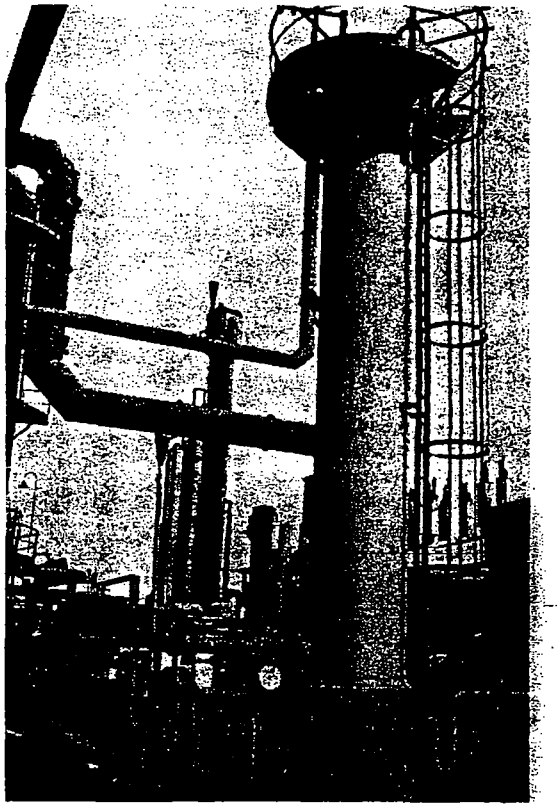

Steam Stripper for Removing Odor from Liquid Waste at El Segundo

Table I. Plants of Government Rubber Program in Los Angeles County

Location of Plant	Plant Operator	Type of Plant	Approx. Prod. Capacity, Short Tons/Year	Water Course at Site	Final Receiving Body of Water
Los Angeles, Calif.	Midland Rubber Corp.	GR-S	81,000 long tons	Dominguez Channel	Los Angeles Harbor (Pacific Ocean)
	Shell Chemical Corp.	Butadiene	56,000[a]	Dominguez Channel	Los Angeles Harbor (Pacific Ocean)
	Dow Chemical Co.	Styrene	57,000	Dominguez Channel	Los Angeles Harbor (Pacific Ocean)
El Segundo	Standard Oil Co. of California	Butadiene	[a]	Pacific Ocean	Pacific Ocean

[a] Combined capacity of Shell Chemical Corp. and Standard Oil Co. of Calif. plants.

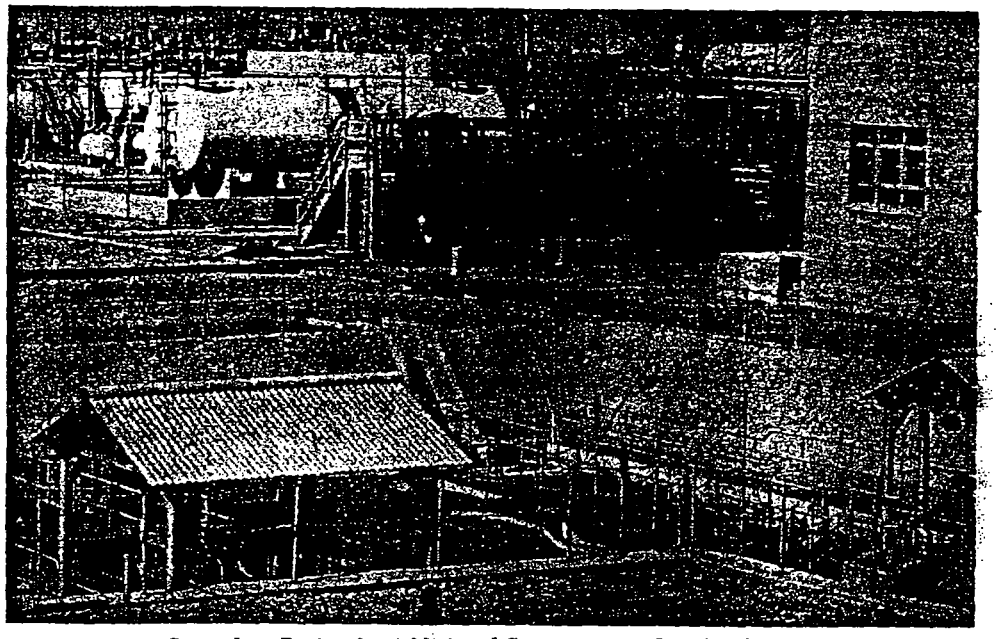

Secondary Basins for Additional Separation within GR-S Plant

garbage, no further unwelcome contributions of household garbage, deceased geese, or goose cleanings were received.

Control of pH of liquid wastes within the specified range is essential to good practice in waste disposal. In general, most of the pH difficulties involve disposal of acidic wastes. Alkaline wastes which do not contain other objectionable components are useful for neutralizing acidity. Excess spent caustic is held in storage for adjusting the effluent pH whenever the need arises in the Los Angeles plants.

In the copolymer plant the hydrogen cycle zeolite softener was changed over to sodium cycle softening and thus eliminated the drainage of acidic regeneration wastes into the sewer. The styrene plant installed a hot-process lime-soda softening to obtain boiler feedwater with a low silica content. This process change resulted in the shutdown of a hydrogen cycle zeolite softener and eliminated the drainage of acidic regeneration wastes into the sewer.

An important part of the pH problem is the treatment and disposal of alkaline copper wastes from the product purification unit of the Los Angeles butadiene plant. The copper was removed originally by acidifying the waste and agitating with air in the presence of scrap iron. While this treatment reduced the copper content to an acceptably low level, the treated wastes were acidic and contained iron salts. On adjusting the pH of the effluent to the desired range of 6.5 to 10.0, iron hydroxide was formed. This contributed to suspended solids content of the effluent, which was considered objectionable. Through the assistance and cooperation of Los Angeles County authorities, an alternative disposal method was developed, which consists of draining untreated alkaline copper-bearing wastes into the sanitary sewer. The quantity of liquid, pH, and copper content are subject to appropriate limitations to prevent any adverse effects in the sewage treatment plant or in the sewers. The tolerance for copper in any sewage treatment plant is low, but the flow of sanitary sewage through this particular treatment plant is so great that a rather large quantity of copper can be accepted without affecting operation of the digesters. Shortly after the alternative disposal method was placed in operation, a definite improvement was noted in the characteristics of remaining wastes, which are drained into Dominguez Channel. The pH fell within the desired range most of the time. Copper was eliminated from the channel and the deposition of insoluble material in the bed of the channel was decreased.

Two toxic ingredients in the Knox Street effluent are chromates and *tert*-butyl catechol. Copper, which was formerly present in concentrations of 1 to 2 p.p.m., was eliminated from the effluent drained to Dominguez Channel in 1951. Chromates are used in treating circulating cooling water, and enter the sewer system as cooling tower blowdown. The concentration is too low (15 to 30 p.p.m. as sodium dichromate) to prevent the growth of algae or bacteria in the circulating cooling water without the addition of

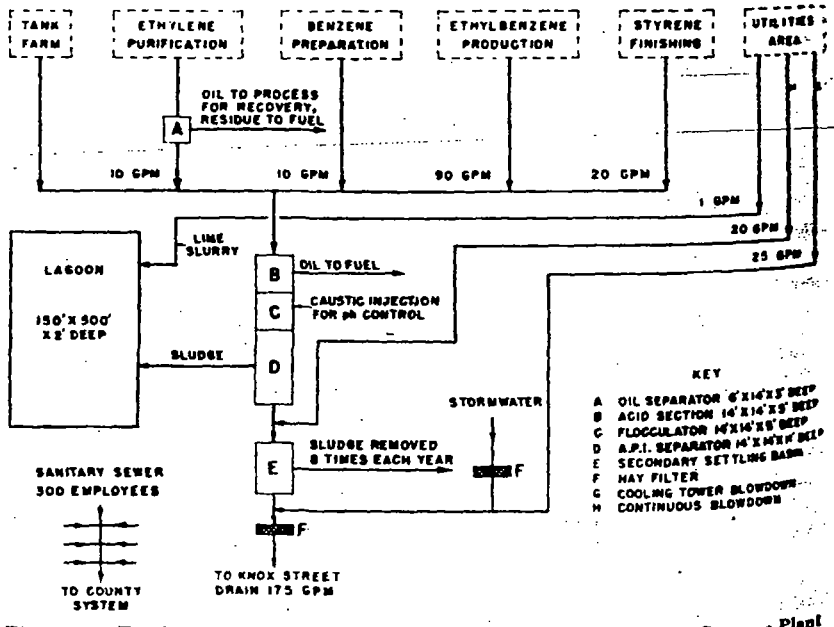

Figure 2. Facilities for Treatment of Liquid Waste at Los Angeles Styrene Plant

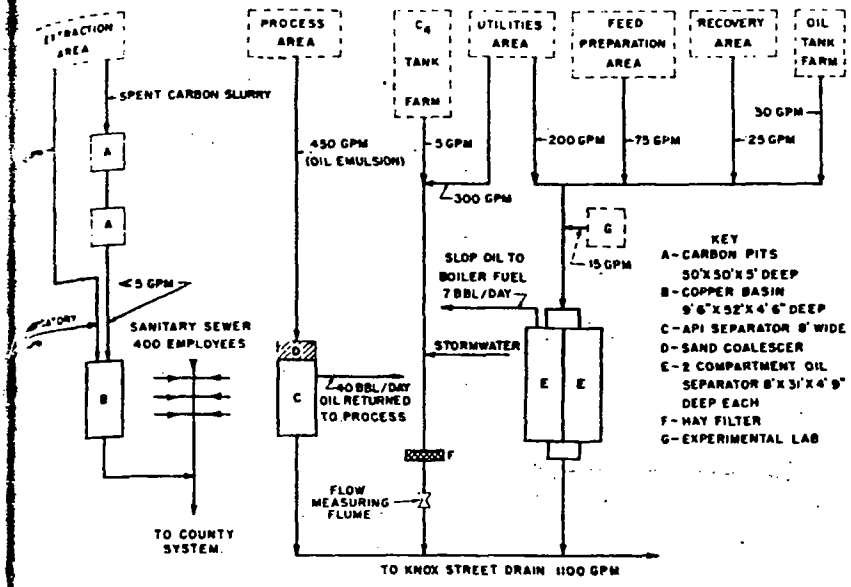

Figure 3. **Facilities for Treatment of Liquid Waste at Los Angeles Butadiene Plant**

...e. According to Ellis (*1*), goldfish tolerated 100 p.p.m. of ...ssium dichromate for 108 hours, but 500 p.p.m. was fatal in ...ers. As the cooling tower blowdown amounts to only 15% ... total effluent, it has been assumed that the hazard of drain... effluent containing less than 10 p.p.m. of chromate (as ...ssium dichromate) is slight. A small amount of *tert*-butyl ...chol is used as an oxidation inhibitor in an intermediate ma... but is removed and discarded prior to subsequent process... The concentration in the total effluent is estimated to be ...ore than 0.013 p.p.m. No data are available regarding the ...ity of *tert*-butyl catechol, but a potency at least 100 times ...possessed by chlorine or phenol would be required to produce ...deleterious effects. It is not probable that *tert*-butyl cate... possesses such a high potency. Other toxic materials which ...be present in the effluent, such as chlorine, bromine, am..., hydrocarbons, and metallic salts, are never present in ... concentrations.

...e temperature standard of ... F. maximum is met at all ... The actual temperature ...rmally not more than 10° ... atmospheric.

...e sulfide content of all ...rials processed is so low that ...ion has never been detected ...e effluent.

...ypical data for effluent enter... Dominguez Channel are:

...ended solids, mL. per liter	0.9
...p.m	23
	8.1
...hold odor	20

STYRENE PLANT

...liquid process wastes of the ... Angeles styrene plant after ...ment and storm water col... on the plant area after ...ge through hay filters are ...rged into the Knox Street ... The sanitary sewage is discharged into sewers of the County Sanitation Districts of Los Angeles County (Figure 2).

Waste waters from ethylene and benzene purification, ethylbenzene production, ethylbenzene cracking, and styrene finishing are discharged into the process sewer terminating at the final separators. These wastes and tar recovered from the styrene finishing and benzene purification have caused complex waste-treatment and disposal problems. The solutions of the two problems are included in this report.

One of the manufacturing operations at the styrene plant resulted in the production of an oily sludge containing salts. The sludge could not be burned because that would have created a serious air-pollution problem. It could not be drained into the sewer system because the oil could not be separated in the settling basin. There were no dumps in Los Angeles County which could take this sludge. It would have been possible to barge the material to sea, but because of multiple handling and distances involved, this method would have been costly. As a temporary measure, the sludge was held in storage pending development of a suitable disposal method. A method was eventually developed that involved separating the sludge into two fractions: an oil that could be used for boiler fuel without creating any new problems, and another fraction, an approximately 30% aqueous solution of aluminum chloride, which was oil-free, relatively odorless, and very effective as a weed killer. A sufficiently large unit was installed to process all sludge held in storage within a reasonable time in addition to processing current production. The excess capacity was useful at a later date when the plant production was increased, and the sludge output became correspondingly

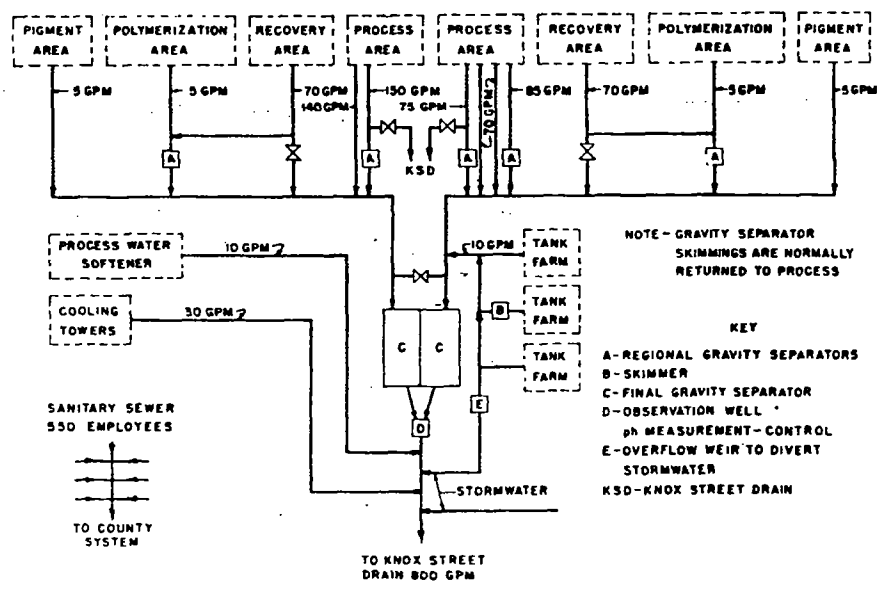

Figure 4. **Facilities for Treatment of Liquid Waste at Los Angeles GR-S Plant**

untreated ... copper-bea... wastes into the ... tary sewer. ... quantity of ... pH, and copper ... tent are subject ... appropriate ... tions to prevent ... adverse effects ... sewage treatment plant or in the ... The tolerance ... copper in any ... treatment plant ... low, but the ... sanitary sewage ... through this ... ular treatment ... is so great ... rather large ... of copper can be ... cepted with ... affecting operation ... of the digester. Shortly after the ... ternative ... method was ... was noted in the ... re drained into Domingu... esired range most of the ... annel and the deposition ... channel was decreased. Street effluent are ... hich was formerly ... eliminated from the ... 951. Chromates are ... d enter the sewer system ... ntration is too low (15 ... vent the growth of ... ater without the addition ...

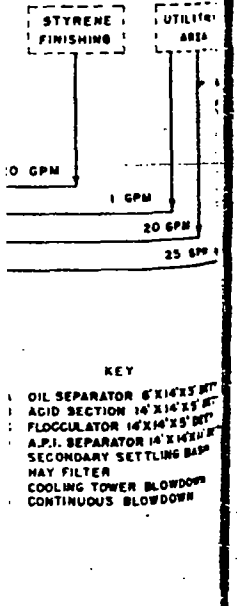

Knox Street Spills Skimming Unit

greater. Although the unit eliminated a difficult waste-disposal problem, it is not considered now to be a part of the waste-disposal facilities. It is deemed an extension of, and integral with, the manufacturing process.

Figure 2 indicates a multiple treatment unit which has achieved a marked reduction in the content of oil and suspended solids of the major liquid waste stream.

Originally, a single settling basin was employed to remove floating oil and aluminum hydroxide precipitate. This simultaneous separation resulted in oily floc of the same density as water in the separator effluent. Stepwise separation was accomplished by the installation of an additional basin. Acidic oily liquid waste is now settled in the first basin, where the oil is skimmed off. The effluent from this basin enters a mixing chamber, is neutralized with waste alkaline sodium aluminate solution, and flows into the second basin. Aluminum hydroxide precipitates in the second basin and is removed. The effluent from the second basin contains practically no turbidity and no visible oil. The sludge from the separators is removed and placed on sludge beds.

The waters from decanters in the ethylbenzene cracking units are subjected to distillation in order to recover volatile materials. The stripped condensate is returned to the steam plant as make-up water. Jet condenser water of the process is returned to the cooling water system.

LOS ANGELES BUTADIENE PLANT

The handling of the copper wastes of the plant is reported above. All other process wastes after treatment are discharged into the Knox Street drain. The copper wastes and sanitary sewage are discharged into the county of Los Angeles sewer system. All storm water runoff by-passes the gravity separators but passes through hay filters before entering the Knox Street drain (Figure 3).

Steam condensate from the dehydrogenation process in the production of crude butadiene is the major plant waste requiring treatment. The stream is a fairly stable emulsion. This waste is passed through a sand coalescer, where intimate contact with particles of sand frees the emulsified oil and enables the separation to be made in the gravity separator which follows the sand coalescer. About 10 barrels of oil per day are separated from this waste and returned to the process. The separator effluent is discharged to the Knox Street drain.

Wastes from the utilities area, together with wastes from the feed purification and gas recovery areas, are discharged into a sewer line that leads to two primary basins in parallel. Sludge accumulating in these basins is trucked away at yearly intervals. About 7 barrels per day of slop oil is skimmed off these basins and sent to the boiler house for use as fuel.

GR-S PLANT

Originally the present (copolymer) plant operated as two plants. These units were shut down in July 1947 and September 1949 and reopened as one plant in December 1950. The plant is designed along typical copolymer lines and is divided into the following principal production areas: pigment, polymerization, recovery, and process. The plant has been modernized to produce cold rubber, oil GR-S masterbatches, and carbon black GR-S masterbatches in addition to the regular types and limited quantities of regular and cold latex.

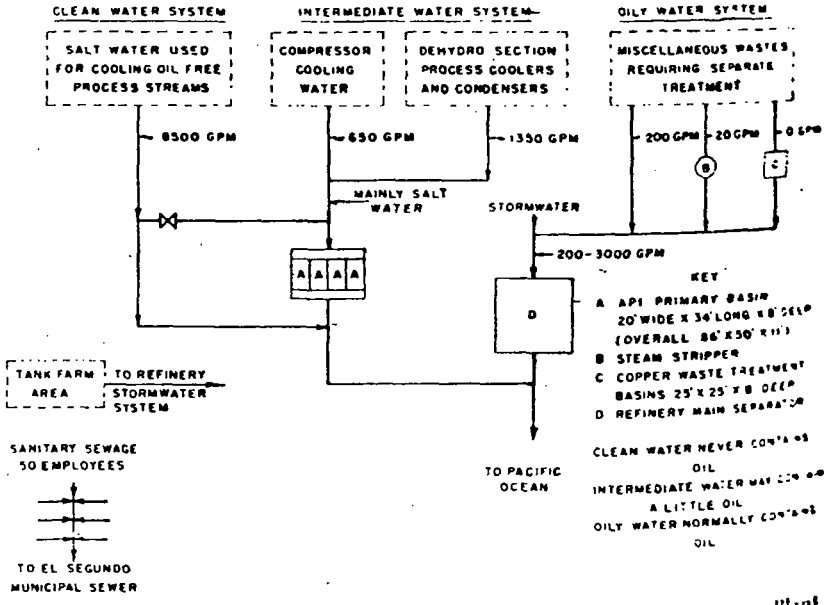

Figure 5. Facilities for Treatment of Liquid Waste at El Segundo Butadiene Plant

y filters before enter
nox Street drain (Figu
Steam condensate from
hydrogenation process
oduction of crude buta
he major plant waste
; treatment. The stream
rly stable emulsion.
ste is passed through a
lescer, where intimate
t with particles of sand
emulsified oil and
separation to be made in
vity separator which
sand coalescer. About
rels of oil per day are
ed from this waste
ned to the process.
arator effluent is discharg
he Knox Street drain.
Vastes from the utili
, together with
n the feed purification
recovery areas, are
rged into a sewer
t leads to two pri
ilating in these basin
About 7 barrels per d
nd sent to the boiler

) plant operated
n July 1947 and Septem
ecember 1950. The
lines and is divided
eas: pigment, polym
it has been modernized
atches, and carbon b
regular types and li

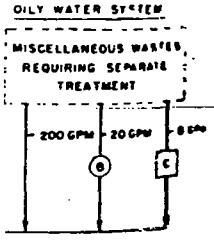

ndo Butadiene Plant

1946 new regional sumps
al separators were pro-
and some of the original
were modified. Upon
ation in 1950 all the
ial waste facilities
placed in operation (Fig-

process wastes, after re-
and final treatment in
separators, are dis-
into the Knox Street
Sanitary wastes are
arged into the sewer sys-
of the county of Los
. Most of the storm
is discharged into the
Street drain, and only a
of it passes through the
separators serving the

ential wastes from the
nt area include soaps,
idants, modifiers, and
ry chemicals. Wastes
this area are discharged
to the final separator.

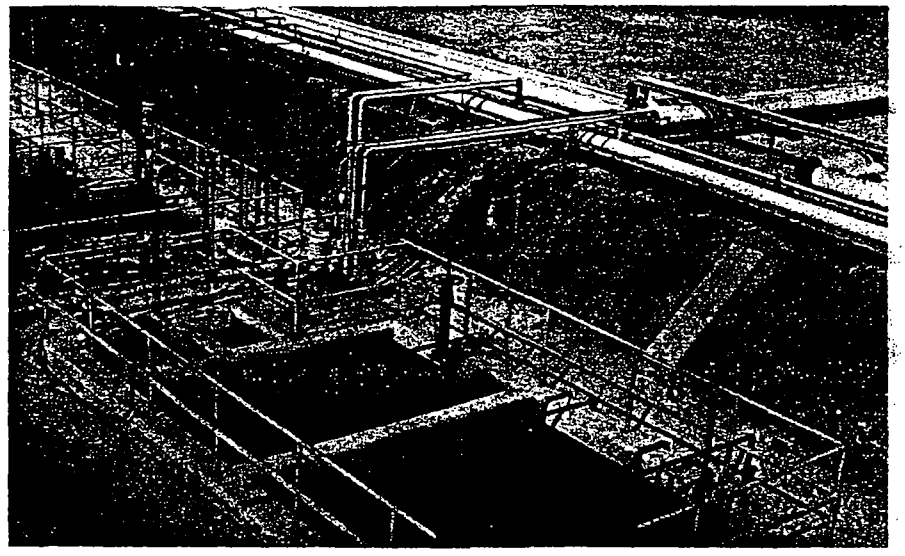

Settling Basin

Oil removal in the basin is followed by neutralization and flocculation to produce a sparkling clear effluent at the styrene plant

ional separators are provided for treating the combined from the polymerization and recovery areas. Waste from these areas may contain latex, polymer, and styrene. latex reaching these separators is coagulated and removed. ing materials are removed from the surface of the impound- uid during normal operations. The effluent is discharged drains leading to the final separator.

ains from the process areas discharge into area separators. er crumbs and latex received by the separators are removed imming. These units also receive the waste coagulants of ated brine. Wash water from the Oliver filters used in sing rubber crumb in production is discharged to the final ators.

re are two final separators, each serving a part of the plant, interconnected so one may be used when the other is being d. Floating materials are removed daily and sludge from bottom is removed twice a year.

ains from the tank farm of the plant receive regional separa- and then are discharged into the final separator. Clarified from this unit are discharged into the Knox Street drain.

1952 an additional process separator was installed for clari- on of liquid waste from carbon black masterbatch coagula- The effluent from this separator is discharged to the final ator.

1952 an incinerator was installed to burn precoagulum from ers and piping without the emission of smoke. Personnel Air Pollution Control District gave assistance and coopera- throughout every phase of the project.

EL SEGUNDO BUTADIENE PLANT

1947 the liquid waste system for the El Segundo butadiene was revised. The present system provides for the separa- of wastes into clean water, intermediate water, oily water, r solutions waste, foul water or quench water, and sanitary e (Figure 5).

h water used for cooling water in clean systems is discharged tly to the main drain to the ocean. The estimated flow is gallons per minute. The main drain also receives the water directly. The intermediate water, which is mainly water and may be contaminated with oil, amounting to ap- imately 2000 gallons per minute, passes through an API separator. The effluent is discharged to the main drain to the ocean. Oily water (including storm water), varying from 200 to 3000 gallons per minute depending on rainfall, is discharged into the main refinery separator adjacent to the butadiene plant.

Under present operations the El Segundo plant sends its crude butadiene to the Los Angeles plant; hence, the copper ammonium acetate process of butadiene purification is not used. The plant has facilities for the collection and purification of copper solution drips and spills. The copper can be removed by steaming. The clear liquid can be discharged to the oily waste sewer. The sludge from the decomposition can be disposed of by burial in locations where the quality of underground waters will not be jeopardized.

Odors emanating from aqueous waste may give rise to various difficulties. In one instance a foul water of about 20 gallons per minute from quench water drains produced a characteristic aroma that was detectable some distance from the point of discharge of the main waste water drain of the plant. This problem was solved by steam stripping the waste and returning the stripper tops to process. The stripper bottoms, which are substantially odor-free, are drained to the main sewer discharging into the ocean. The odor is no longer detectable, even at the point of discharge.

The sanitary sewage is discharged into the municipal system of the city of El Segundo.

This plant also had another problem. It is generally recognized that disturbingly loud noises of a continuous or repetitious nature will in time lead to demands by the public for abatement. Less generally recognized is the fact that subsonic vibrations

TABLE II. INSTALLED VALUE OF SANITARY AND INDUSTRIAL WASTE FACILITIES

Waste Facilities	Value
Liquid	
Sanitary sewerage	$134,000
Pipelines, drains, and ditches	
For industrial wastes	474,000
For surface and storm water	421,000
Waste treatment and disposal facilities	751,000
Solid	62,000
Gas	310,000
Total	$2,152,000

transmitted through the atmosphere may create a nuisance as great as though they were audible.

In one particular instance, three large cycloidal-type positive rotary blowers were used to supply low pressure air for process use. An electrostatic precipitator was used to remove dust and debris from the intake air. The purified air then entered an intake tunnel which served as a suction header for the three blowers, which were driven at a fixed rate by electric motors. Consequently, pulsations in the intake air occurred at a constant frequency. The air column in the intake tunnel was in resonance. The subsonic vibrations thus generated rattled the walls and windows of homes adjacent to the plant. Plate glass windows in stores vibrated audibly within a radius of one mile.

The problem was eliminated by installing a reinforced concrete block building around the air intake, in order to draw the air through a series of baffles. The dimensions and placement of the baffles were designed to damp out pulsations of the same frequency generated by the blowers. Subsonic vibrations in the atmosphere may not be an air pollutant, but public reaction was the same as if they were.

In November 1952 the sanitary and industrial waste facilities installed and in use at the plants were valued at $2,152,000, an increase of $787,000 since March 1946. Table II summarizes data as to liquid, solid, and gaseous facilities.

LITERATURE CITED

(1) Ellis, M. M., U. S. Bur. Fisheries, 48, *Bull.* 22, 375, 381, 385 (1937).

(2) Hebbard, G. M., Powell, S. T., and Rostenbach, R. E., Ind. Eng. Chem., 39, 589 (1947).

(3) Rostenbach, R. E., *Sewage and Ind. Wastes*, 24, 1138-43 (September 1952).

Received for review April 10, 1953. Accepted September 19, 1953

Disposal of California Winery Wastes

The major problems concerned with the disposal of California winery wastes result, in large measure, from the tremendous volume of brandy stillage produced in an intermittent, seasonal operation. The stillage, estimated to average about 200 gallons per ton of grapes crushed, is extremely variable in potential putrescibility. Therefore, land disposal by intermittent irrigation is the best method of disposal at present although complete treatment of the stillage can be effected by a combination of neutralization, anaerobic digestion, and biological oxidation.

REESE H. VAUGHN AND GEORGE L. MARSH

Department of Food Technology, University of California, Davis, Calif.

ADEQUATE disposal of liquid winery wastes has been a continuously perplexing problem since the revival of the industry in California in 1933. In the years immediately following resumption of large scale production, the pollution of streams with concentrated winery wastes was acute (*4*, *9*). When the further discharge of concentrated liquid winery wastes to the rivers was prohibited by the Division of Fish and Game, state of California, use of deep ponds or lagoons became standard practice, even though this gave rise to widespread odor nuisances resulting from anaerobic fermentation of the wastes. Abatement of these odors has become of immediate concern to many California vintners. It is anticipated that odor control and other requirements for sanitary disposal of liquid winery wastes will be magnified with time because of the continual increases in the population of the state.

NATURE OF THE WASTES

Winery wastes may, for convenience, be defined as liquid, semiliquid, and solid residues which are removed from the wine by natural or artificial means during the process of vinification. These residues, for the most part, are natural to the grape. A few arise from other sources. The following kinds are encountered:

Liquid	Semiliquid	Solid
Waste wash water	Lees	Pomace
Brandy distillery wastes	Dessert wine	Cream of tartar deposits (argols or wine stone)
Condenser water	Table wine	
Stillage (still-slop)	Refrigeration	
	Clarification and filtration sediments (bentonite, Filter-Cel, etc.)	

It has always been customary to utilize certain of these wastes in making by-products. The argols are collected and used for manufacture of tartrate or tartaric acid. (During World War II tartrates were recovered from other sources, such as pomace, refrigeration lees, and stillage. This recovery is not economical at present.) The pomace may be used as a soil mulch or dried and used for prepared stock feed. Lees from table or dessert wines generally are used for the recovery of brandy, but their distillation adds to the over-all waste-disposal problem created by the enormous volumes of brandy distillery wastes, together with the other liquid wastes of the wine industry in California.

VOLUME OF BRANDY DISTILLERY WASTES

It is difficult to estimate the total volume of brandy distillery wastes, either for an individual winery or for the whole California industry. The volume of these wastes depends upon a great many variables: the seasonal character of the industry, the tonnage of grapes crushed, the ratio of wine to brandy made from the grapes that are crushed, and variations in winery and distillery operation and practice, particularly those used to produce the wine "distilling material" from which neutral brandy for fortification is derived.

Every effort is made to obtain fortifying spirit from the materials at hand. Brandy distillery wastes, therefore, may originate from distillation of distilling materials produced from pomace and lees, as well as wines. The volume, as well as the chemical composition of the stillage, will vary significantly from time to time, although the majority of the spirit used is derived from distilling material produced from wines rather than the grape residues.

Retain for Relocation of P/L Bridges across Dom. Channel / per Mr. Chamberlin

GENERAL PROVISIONS

A. This permit is valid only for the purpose specified herein. No change of program as outlined in application or drawings submitted with application is permitted except upon written permission of the Chief Engineer.

B. Activities and uses authorized under this permit are subject to any instructions of the Chief Engineer or his representative. ALL INSTRUCTIONS MUST BE STRICTLY OBSERVED.

C. Permittee shall assume entire responsibility for all activities and uses under this permit and shall save the District free and harmless from any and all expense, cost or liability in connection with or resulting from the exercise of this permit including, but not limited to, property damage, personal injury and wrongful death.

D. Any damage caused to Flood Control structures by reason of exercise of this permit shall be repaired at the cost of permittee to the satisfaction of the District. Should permittee neglect to promptly make repairs, District may make repairs or have repairs made and permittee will be billed and shall pay costs.

E. Any structures or portions thereof or plantings placed on District rights of way or which affect District structures must be removed, revised and/or relocated by permittee without cost to the District, or any other public agency the District shall so designate, should future activities or policy so require.

F. This permit is valid only to the extent of District jurisdiction. Permits required by other interested agencies and consent of underlying fee owners of District easement lands are the responsibility of the permittee. NOTHING CONTAINED IN THIS PERMIT SHALL BE CONSTRUED AS A RELINQUISHMENT OF ANY RIGHTS NOW HELD BY THE DISTRICT.

G. This permit is subject to all prior unexpired permits, agreements, easements, privileges or other rights, whether recorded or unrecorded, in the area specified in this permit. Permittee shall make his own arrangements with holders of such prior rights.

H. Unless otherwise specified herein, this permit may be revoked or cancelled at any time by the Chief Engineer when required for flood control or conservation purposes.

I. Upon written notice of cancellation or revocation of this permit for any cause whatsoever, permittee shall restore District right of way and structures to their condition prior to the issuance of the permit and then shall vacate District property. Should permittee neglect to restore the premises or structures to a condition satisfactory to the Chief Engineer, the District may perform such work or have work performed, and permittee agrees to reimburse the District for all costs of the work so performed upon receipt of a statement therefor.

TORRANCE
SP-0012221

APPROVED FOR FILE

1238A 12-54

LOS ANGELES COUNTY FLOOD CONTROL DISTRICT

MAILING ADDRESS:
BOX 2418
TERMINAL ANNEX
LOS ANGELES 54, CALIFORNIA

OFFICE ADDRESS:
2250 ALCAZAR STREET
LOS ANGELES
TELEPHONE: CAPITOL 2-8151

PERMIT

FILE NO. 28

STREAM: Laguna Dominguez Flood Control System-Dominguez Channel

PERMIT NO. 55327-A

PERMITTEE: Shell Chemical Corporation
P. O. Box 211, Torrance, California
Attention: Mr. M. Voogd, Plant Manager

TELEPHONE Davis 9-1141

PURPOSE OF PERMIT

to operate and maintain an outlet structure for a 30-inch pipeline constructed on the Dominguez Channel right of way about 600 feet below Main Street, under Permit No. 45174, issued on December 17, 1945 to the Office of Rubber Reserve, Reconstruction Finance Corporation.

APPLICATION DATED June 10, 1955 PERMIT ISSUED July 27, 1955 EXPIRES Upon 30 days' written notice.

NOTE: PERMITTEE MUST NOTIFY R. H. Ortiz BY TELEPHONE, CApitol 2-8151 STATION 341 AT LEAST 24 HOURS BEFORE STARTING ANY WORK UNDER THIS PERMIT. FAILURE TO SO NOTIFY IS CAUSE FOR REVOCATION OF PERMIT. SHOULD PERMITTEE FAIL TO ACTIVELY AND DILIGENTLY EXERCISE THE PRIVILEGES OF THIS PERMIT WITHIN ~~xxxxx~~ DAYS FROM DATE OF ISSUANCE, THE PERMIT BECOMES NULL AND VOID.

FEES: APPLICATION $5.00 - Paid. Receipt No. 922736N attached
INSPECTION $ none
ANNUAL $ none

BY AUTHORITY OF THE BOARD OF SUPERVISORS DATED March 28, 1950

H. E. HEDGER, CHIEF ENGINEER.

BY Milan W. Ransom Jr.
Milan W. Ransom, Acting Division Engineer

PLEASE MAKE ALL CHECKS PAYABLE TO:
LOS ANGELES COUNTY FLOOD CONTROL DISTRICT.

THIS PERMIT IS SUBJECT TO THE GENERAL PROVISIONS LISTED ON THE REVERSE SIDE HEREOF IN ADDITION TO THE FOLLOWING SPECIFIC PROVISIONS:

1. Permittee shall relieve the District of all expense in connection with the maintenance, repair and operation of the structure and shall assume all liability in connection with or resulting therefrom.

2. This permit is for maintenance and operation of the outlet structure only on the District right of way and is valid only to the extent of this District's jurisdiction. The permit may not be construed to allow the discharge of industrial waste or sewage.

Encl.
CM:rl
cc: Mr. Bittman (2)
Mr. Ransom (1) (King)
Mr. Eiland
General Files

FLOOD CONTROL DISTRICT
RECEIVED

TORRANCE
SP-0012222

EXERCISE OF THIS PERMIT SHALL INDICATE ACCEPTANCE OF ALL PROVISIONS. VIOLATION OF ANY PROVISION SHALL BE CAUSE FOR IMMEDIATE REVOCATION OF PERMIT.

Mr. Hodgkinson (Kin.)

Los Angeles County Flood Control District

REPORT ON REQUEST OF SHELL CHEMICAL CORPORATION FOR PERMIT TO MAINTAIN A WASTE WATER CONNECTION ON DOMINGUEZ CHANNEL DOWNSTREAM FROM MAIN STREET.

Laguna Dominguez Flood Control System-Dominguez Channel - 28
Permit Application No. 55327-A

C. Magness
July 7, 1955

---

1. Source of Request

Letter No. 8411, dated June 10, 1955, from Shell Chemical Corporation, P. O.Box 211, Torrance, California, per Mr. M. Voogd, Plant Manager (Phone: Davis 9-1141).

2. Request and Location

Applicant requests permit for Shell Chemical Corporation to continue to maintain and operate a connection discharging industrial waste into Dominguez Channel about 600 feet downstream from Main Street.

3. Jurisdiction

(a) Constructed by: L.A.C.F.C.D.

(b) Operated and maintained by: L.A.C.F.C.D.

(c) Right of way status: District has easement at this location.

(d) Future proposals: Construction of ultimate channel by this District on a different alignment.

4. Field Inspection and/or Contact

No field inspection was made in connection with the subject request. However, the writer has visited this area previously and observed the existing pipe connection. The channel is unlined at this location, trapezoidal in section, and the outlet structure for the 30-inch industrial waste line is equipped with concrete wing walls and a concrete spillway.

5. Background

On December 17, 1945, the District issued Permit No. 45174 to the Office of Rubber Reserve, Reconstruction Finance Corporation, for

TORRANCE
SP-0012223

constructing and maintaining the subject outlet structure on District right of way in accordance with a drawing submitted at that time (District No. 28-FD 57). The structure was installed in accordance with the plan and has been operated and maintained by the Office of Rubber Reserve since that time. Early in 1955, the plants served by this outfall were sold to the Shell Chemical Corporation, hence the present request for issuance of a permit. The District's original permit covered only construction, operation and maintenance of the structure and did not authorize discharge of industrial waste.

6. Supporting Data and Policy

The District prefers that active permits which designate a certain responsibility to permittees be issued to the owners of property involved or a responsible party interested. It appears that the new permit should be issued for operating and maintaining the outlet structure only, and should contain provisions making the permittee responsible for all costs in connection with such operation. The original permit was set up to expire upon 30 days' written notice. It appears that the same provision should apply to the new permit.

7. Conclusions

It is concluded that the requested permit may be issued without detriment to the District.

8. Recommendations

It is recommended that permit be issued subject to the general and following specific provisions:

1. Permittee shall relieve the District of all expense in connection with the maintenance repair and operation of the structure and shall assume all liability in connection with or resulting therefrom.

2. This permit is for maintenance and operation of the outlet structure only on the District right of way and is valid only to the extent of this District's jurisdiction. The permit may not be construed to allow the discharge of industrial waste or sewage.

File No. 28
Stream: Laguna Dominguez Flood Control System-Dominguez Channel
Date Issued: When typed
Name: Shell Chemical Corporation
P. O. Box 211
Torrance, California
Attention: Mr. M. Voogd
Plant Manager

Permit Application No. 55327-A
Expires: Upon 30 days' written notice
(Starting within: xxxxx)

Phone: Davis 9-1141

TORRANCE
SP-0012224

to operate and maintain an outlet structure for a 30-inch pipeline constructed on the Dominguez Channel right of way about 600 feet below Main Street, under Permit No. 45174, issued on December 17, 1945 to the Office of Rubber Reserve, Reconstruction Finance Corporation.

Application Dated: June 10, 1955
Authority: B/S dated March 28, 1950
Notify: R. H. Ortis, Capitol 2-8151, Station 341
Signed: N. B. Hodgkinson, Division Engineer
Fees: Aplication - $5.00.

9. References

(a) Paragraph 1, this report.

(b) District Map No. 28-FD 57.

(c) Permit No. 45174 dated December 17, 1945 to Office of Rubber Reserve.

10. Carbon Copies

Mr. Bittman (2)
Mr. Hodgkinson (King)

CM:oa

TORRANCE
SP-0012225

June 10, 1955

Los Angeles County Flood Control District
Mr. H. E. Hedger, Chief Engineer
P. O. Box 2418
Terminal Annex
Los Angeles 54, California

Gentlemen:

Pursuant to a report to the Honorable Board of Supervisors of The County of Los Angeles from the Office of County Surveyor and County Engineer, dated November 29, 1945, a permit was granted to the operating agents of the Office of Rubber Reserve to drain waste water into Dominguez Channel. The plants are located between 190th Street and Del Amo, and between Normandie Avenue and Figueroa Street with joint disposal facilities into Dominguez Channel near Main Street. The report was signed by Alfred Jones, H. O. Swartout, H. E. Hedger, and A. M. Rawn.

When the Government owned synthetic rubber plants were sold earlier this year to private industries, the styrene, butadiene and copolymer plants covered by the permit of 1945 were sold to Shell Chemical Corporation. Since April 25, 1955, Shell Chemical Corporation has owned and operated these plants. There was no cessation in operations, and no change in the process involved in the transfer of ownership.

It is our understanding from your Mr. Raye C. King that the original permit to use Dominguez Channel for the drainage of industrial liquid wastes expired with the change in ownership. Mr. King requested that we submit an application for a new permit. The purpose of this letter is to apply for a permit in the name of Shell Chemical Corporation to continue using Dominguez Channel as the receiver of industrial liquid wastes. The wastes are discharged into the channel at a point about 600 feet east of Main Street.

Very truly yours,

SHELL CHEMICAL CORPORATION

ORIGINAL SIGNED BY M. VOOGD

M. Voogd
Plant Manager

Same as 8411

TORRANCE
SP-0012226

April 10, 1943

72
Laguna-Dominguez Flood
Control System
Dominguez Channel
Permit Application No. 43033
Construction of Suspension bridge
Fourth District

Honorable Board of Supervisors
Los Angeles County Flood Control District
501 Hall of Records
Los Angeles, California

Gentlemen:

We recommend that your Honorable Board grant a permit to the Defense Plant Corporation, acting by and through the Shell Chemical Company, to construct a suspension bridge across the Dominguez Channel approximately 2,400 feet above Avalon Boulevard subject to the provisions on the attached form.

The pipe line structure is a part of a war plant which requires a crossing of the Dominguez Channel at this location.

No District interests or functions will be impaired.

Yours truly

PROOF READ
Read by M. A.
Checked by M. F.
Date 8-26-46

M. E. Salsbury, Acting Chief Engineer

ABC:ALF
Encl.

cc: Mrs. Burks (3)
Supervisor McDonough
Supervisor Smith
Supervisor Ford
Supervisor Hauge
Mr. Dowds
Mr. McFadden
Mr. Burnham
Mr. Bittman (2)
Mr. Eiland
Mr. Collins
Mrs. Hurd
Mrs. McGachan

TORRANCE
SP-0012227

Letter No. 978
Copied by MWA August 23, 1946 Permit Application No. 43033

LOS ANGELES COUNTY FLOOD CONTROL DISTRICT
751 South Figueroa Street
Los Angeles 14, California

File No. 72

Stream Dominguez Channel Permit No. 43033

Date Issued After Board of Supervisor's approval Expires Upon 60 days written notice

Defense Plant Corporation (Acting by and through the Shell Chemical Company) is hereby permitted to construct a suspension pipe bridge across the Dominguez Channel approximately 2,400 feet above Avalon Boulevard, as per application dated March 31, 1943 and Drawing No. FD 158 submitted therewith

under the authority of the Board of Supervisors of the Flood Control District dated Board's approval subject to the general conditions listed on the reverse side hereof in addition to the following specific provisions:

1. The bottom of the proposed bridge shall not be constructed below 15 feet U.S.G.S. datum.

2. The construction of the suspension bridge shall be in accordance with the approved construction methods under the District's supervision insofar as the District's right of way is concerned.

COPY

PROOF READ
Read by M. A.
Checked by M. E.
Date 2-26-46

EXERCISE OF PERMIT SHALL INDICATE ACCEPTANCE OF ALL PROVISIONS

H. E. Hedger, Chief Engineer

By _____
N. B. Hodgkinson, Division Engineer

FEES: Application $10 Paid Annual $ None; Supervision & Inspection $ 10.00
Permit becomes valid only upon payment of fees within fifteen (15) days of date of issuance, including any initial prorated annual fee.
Subsequent annual fees shall become due July 1st of each year and must be received at the office of the Flood Control District within thirty (30) days after due date.
Please make checks payable to the Los Angeles County Flood Control District.

IMPORTANT: Under penalty of revocation of permit, no activity is to begin under this permit until permittee has notified Mr. Ray S. Whitehead 751 South Figueroa Street, Los Angeles 14, California, Telephone MU 9211 Station 3251.
Arrangements will then be made relative to supervision and inspection.

ABC:ALF/F

(OVER)

TORRANCE
SP-0012228

STONE & WEBSTER ENGINEERING CORPORATION

P. O. Box 271, Gardena, California

PHONE MENLO 41103

March 31, 1943

72, Dominguez Chance

Los Angeles County Flood Control District
751 South Figueroa Street
Los Angeles, California

Dear Sirs:

Please grant us a permit for a suspension pipe bridge crossing Dominguez Channel as per attached Drawing FD-158. (F.C. number = 28FD35)

COPY

The Pacific Pipe Line Construction Company will take care of the required application fees which are included in their contract with us for the construction work.

Very truly yours.

Defense Plant Corporation
acting by and through the
Shell Chemical Company, by
Stone & Webster Engineering Corp.,
Agent,

/s/ By H. C. La Ville
Superintendent of Construction

Letter No. 978
Copied by MWA August 23, 1946

PROOF READ
Read by M. A.
Checked by M. F.
Date 8-26-46

28FD35
4-1-43
Lindem

Chk FOR $10.00 Received
4-1-43 H.H.
mere

TORRANCE
SP-0012229

Permit Application No. [illegible]

Los Angeles County Flood Control District

REPORT ON REQUEST OF DEFENSE PLANT CORPORATION (ACTING BY AND THROUGH THE SHELL CHEMICAL COMPANY) FOR A PERMIT TO CONSTRUCT A SUSPENSION PIPE BRIDGE ACROSS THE DOMINGUEZ CHANNEL APPROXIMATELY 2,400 FEET ABOVE AVALON BOULEVARD

Permit Application No. 43033

A. B. Collins
April 7, 1943

In a letter dated March 31, 1943, the Stone & Webster Engineering Corporation acting as agent for the Defense Plant Corporation, which is acting by and through the Shell Chemical Company, requested a permit to construct a suspension pipe bridge across the Dominguez Channel at about 2,400 feet above Avalon Boulevard. Their Drawing FD-158 (FC No. = 28 FD 35) was submitted with the application.

Lost - replaced by 28/F 731

The Stone & Webster Engineering Corporation is the contractor for the construction of the pipe line which in turn is to be subcontracted by the Pacific Pipe Line Construction Company. The structure is in connection with a war unit and expedition is required. The application fee of $10.00 was paid on April 1, 1943.

The plan and request was submitted to the District's Design Division for analysis and the following memo resulted:

April 3, 1943

To: W. B. Ream
From: W. H. McMillen

Re: Dominguez Channel near Avalon Blvd. Request to build suspension bridge for pipes. Defense Plant Corporation (The Shell Chemical Co.) by Stone & Webster Engineering Corpn.

With the exception of the following comments, the proposed work shown on the attached drawing No. FD-158 is satisfactory to this department. This bridge conforms with requirements for "Minimum Relief Plans" but not to "Ultimate Plans".

The elevation governing the clearance between the water surface and the bottom of the proposed bridge is not shown on the preliminary print submitted to us by the Stone Webster Company. This elevation shall not be less than 15.0 U.S.G.S. datum.

The District has a 225 foot easement along this section of the channel upon which the recently excavated minimum relief channel has been constructed.

TORRANCE
SP-0012230

PROOF READ
Read by M. Q.
Checked by M. F.
Date 8-26-46

Recommendation:

In accordance with the memo from the Design Division and since no District interests or functions will be jeopardized by the suspension bridge, it is recommended that the Board of Supervisors be requested to grant a permit for the purpose outlined above subject to the general and the following specific provisions:

1. The bottom of the proposed bridge shall not be constructed below 15 feet U.S.G.S. datum.

2. The construction of the suspension bridge shall be in accordance with the approved construction methods under the District's supervision insofar as the District's right of way is concerned.

COPY

File No. 72
Permit No. 43033
Expires: Upon 60 days written notice

Stream: Dominguez Channel
Date issued: After Board of Supervisor's approval
Name: Defense Plant Corporation (Acting by and through the Shell Chemical Company)

Construct a suspension pipe bridge across the Dominguez Channel approximately 2,400 feet above Avalon Boulevard, as per application dated March 31, 1943 and Drawing No. FD 158 submitted therewith

Authority: Date of Board's approval Specific Provisions: See above

By: N. B. Hodgkinson, Division Engineer

Fees: Application $10.00 Paid Annual None. Supervision & Inspection $10.

Notify: Mr. Ray S. Whitehead Station 3251

PROOF READ
Read by M. A.
Checked by M.L.F.
Date 8-26-46

References:

Letter No. 978 dated March 31, 1943, Stone & Webster Engineering Corporation, P. O. Box 271, Gardena, California. (Defense Plant Corporation, acting by and through the Shell Chemical Company, by Stone & Webster Engineering Corp., Agent, By H. C. LaVille, Superintendent of Construction)

FD 158 = Applicant's Dwg. Number
28 FD 35 = Flood Control Filing Number

TORRANCE
SP-0012231

F. C. DIST. FORM 77 25M 4-45

LOS . GELES COUNTY FLOOD CONTROL DIS CT

DEPARTMENTAL MEMORANDUM

April 3, 1943

To: W. B. Ream
From: W. H. McMillen Re: Dominguez Channel near Avalon Blvd.
Request to build suspension bridge for pipes.
Defense Plant Corporation (The Shell Chemical C
by Stone and Webster Engineering Corpn

With the exception of the following comments, the proposed work shown on the attached drawing No. FD-158 is satisfactory to this department. This bridge conforms with requirements for "Minimum Relief Plans" but not to "Ultimate Plans."

The elevation governing the clearance between the water surface and the bottom of the proposed bridge is not shown on the preliminary print submitted to us by the Stone Webster Company. This elevation shall not be less than 15.0.U.S.G.S. datum.

PROOF READ
Read by M. R.
Checked by M. F.
Date 8-26-46

WHMcM GB
cc Gen Files
Design ABC FD 158 = Applicants Dwg number
4/5/43 C 28 FD 35 = FLOOD CONTROL FILING NUMBER

TORRANCE
SP-0012232

Shell Chemical
U.S. Rubber Reserve
Alan Cone R/W

File Title Report Data

GENERAL PROVISIONS

A. This permit is valid only for the purpose specified herein. No change of program as outlined in application or drawings submitted with application is permitted except upon written permission of the Chief Engineer.

B. Activities and uses authorized under this permit are subject to any instructions of the Chief Engineer or his representative. ALL INSTRUCTIONS MUST BE STRICTLY OBSERVED.

C. Permittee shall assume entire responsibility for all activities and uses under this permit and shall save the District free and harmless from any and all expense, cost or liability in connection with or resulting from the exercise of this permit including, but not limited to, property damage, personal injury and wrongful death.

D. Any damage caused to Flood Control structures by reason of exercise of this permit shall be repaired at the cost of permittee to the satisfaction of the District. Should permittee neglect to promptly make repairs, District may make repairs or have repairs made and permittee will be billed and shall pay costs.

E. Any structures or portions thereof or plantings placed on District rights of way or which affect District structures must be removed, revised and/or relocated by permittee without cost to the District, or any other public agency the District shall so designate, should future activities or policy so require.

F. This permit is valid only to the extent of District jurisdiction. Permits required by other interested agencies and consent of underlying fee owners of District easement lands are the responsibility of the permittee. NOTHING CONTAINED IN THIS PERMIT SHALL BE CONSTRUED AS A RELINQUISHMENT OF ANY RIGHTS NOW HELD BY THE DISTRICT.

G. This permit is subject to all prior unexpired permits, agreements, easements, privileges or other rights, whether recorded or unrecorded, in the area specified in this permit. Permittee shall make his own arrangements with holders of such prior rights.

H. Unless otherwise specified herein, this permit may be revoked or cancelled at any time by the Chief Engineer when required for flood control or conservation purposes.

I. Upon written notice of cancellation or revocation of this permit for any cause whatsoever, permittee shall restore District right of way and structures to their condition prior to the issuance of the permit and then shall vacate District property. Should permittee neglect to restore the premises or structures to a condition satisfactory to the Chief Engineer, the District may perform such work or have work performed, and permittee agrees to reimburse the District for all costs of the work so performed upon receipt of a statement therefor.

APPROVED FOR
FILE

TORRANCE
SP-0015647

F238A 12-54

LOS ANGELES COUNTY FLOOD CONTROL DISTRICT

MAILING ADDRESS:
BOX 2418
TERMINAL ANNEX
LOS ANGELES 54, CALIFORNIA

OFFICE ADDRESS:
2250 ALCAZAR STREET
LOS ANGELES
TELEPHONE: CAPITOL 2-8151

PERMIT

FILE NO. 28

STREAM: Laguna Dominguez Flood Control System-Dominguez Channel

PERMIT NO. 55327-A

PERMITTEE: Shell Chemical Corporation
P. O. Box 211, Torrance, California
Attention: Mr. M. Voogd, Plant Manager

TELEPHONE Davis 9-1141

PURPOSE OF PERMIT

to operate and maintain an outlet structure for a 30-inch pipeline constructed on the Dominguez Channel right of way about 600 feet below Main Street, under Permit No. 45174, issued on December 17, 1945 to the Office of Rubber Reserve, Reconstruction Finance Corporation.

APPLICATION DATED June 10, 1955 PERMIT ISSUED July 27, 1955 EXPIRES Upon 30 days' written notice.

NOTE: PERMITTEE MUST NOTIFY R. H. Ortiz BY TELEPHONE CApitol 2-8151 STATION 341 AT LEAST 24 HOURS BEFORE STARTING ANY WORK UNDER THIS PERMIT. FAILURE TO SO NOTIFY IS CAUSE FOR REVOCATION OF PERMIT. SHOULD PERMITTEE FAIL TO ACTIVELY AND DILIGENTLY EXERCISE THE PRIVILEGES OF THIS PERMIT WITHIN XXXXXX DAYS FROM DATE OF ISSUANCE, THE PERMIT BECOMES NULL AND VOID.

FEES: APPLICATION $5.00 - Paid. Receipt No. 922736N attached
INSPECTION $none
ANNUAL $none

BY AUTHORITY OF THE BOARD OF SUPERVISORS DATED March 28, 1950

H. E. HEDGER, CHIEF ENGINEER.

BY Milan W. Ransom Jr.
Milan W. Ransom, Acting Division Engineer

PLEASE MAKE ALL CHECKS PAYABLE TO:
LOS ANGELES COUNTY FLOOD CONTROL DISTRICT.

THIS PERMIT IS SUBJECT TO THE GENERAL PROVISIONS LISTED ON THE REVERSE SIDE HEREOF IN ADDITION TO THE FOLLOWING SPECIFIC PROVISIONS:

1. Permittee shall relieve the District of all expense in connection with the maintenance, repair and operation of the structure and shall assume all liability in connection with or resulting therefrom.

2. This permit is for maintenance and operation of the outlet structure only on the District right of way and is valid only to the extent of this District's jurisdiction. The permit may not be construed to allow the discharge of industrial waste or sewage.

Encl.
CM:rl
cc: Mr. Bittman (2)
Mr. Ransom (1) (King)
Mr. Eiland
General Files

TORRANCE
SP-0015648

EXERCISE OF THIS PERMIT SHALL INDICATE ACCEPTANCE OF ALL PROVISIONS. VIOLATION OF ANY PROVISION SHALL BE CAUSE FOR IMMEDIATE REVOCATION OF PERMIT.

Mr. Hoffman (Kin)

Los Angeles County Flood Control District

REPORT ON REQUEST OF SHELL CHEMICAL CORPORATION FOR PERMIT TO MAINTAIN A WASTE WATER CONNECTION ON DOMINGUEZ CHANNEL DOWNSTREAM FROM MAIN STREET.

Laguna Dominguez Flood Control System-Dominguez Channel - 28
Permit Application No. 55327-A

C. Magness
July 7, 1955

---

1. Source of Request

Letter No. 8411, dated June 10, 1955, from Shell Chemical Corporation, P. O.Box 211, Torrance, California, per Mr. M. Voogd, Plant Manager (Phone: Davis 9-1141).

2. Request and Location

Applicant requests permit for Shell Chemical Corporation to continue to maintain and operate a connection discharging industrial waste into Dominguez Channel about 600 feet downstream from Main Street.

3. Jurisdiction

(a) Constructed by: L.A.C.F.C.D.

(b) Operated and maintained by: L.A.C.F.C.D.

(c) Right of way status: District has easement at this location.

(d) Future proposals: Construction of ultimate channel by this District on a different alignment.

4. Field Inspection and/or Contact

No field inspection was made in connection with the subject request. However, the writer has visited this area previously and observed the existing pipe connection. The channel is unlined at this location, trapezoidal in section, and the outlet structure for the 30-inch industrial waste line is equipped with concrete wing walls and a concrete spillway.

5. Background

On December 17, 1945, the District issued Permit No. 45174 to the Office of Rubber Reserve, Reconstruction Finance Corporation, for

TORRANCE
SP-0015649

constructing and maintaining the subject outlet structure on District right of way in accordance with a drawing submitted at that time (District No. 28-FD 57). The structure was installed in accordance with the plan and has been operated and maintained by the Office of Rubber Reserve since that time. Early in 1955, the plants served by this outfall were sold to the Shell Chemical Corporation, hence the present request for issuance of a permit. The District's original permit covered only construction, operation and maintenance of the structure and did not authorize discharge of industrial waste.

6. Supporting Data and Policy

The District prefers that active permits which designate a certain responsibility to permittees be issued to the owners of property involved or a responsible party interested. It appears that the new permit should be issued for operating and maintaining the outlet structure only, and should contain provisions making the permittee responsible for all costs in connection with such operation. The original permit was set up to expire upon 30 days' written notice. It appears that the same provision should apply to the new permit.

7. Conclusions

It is concluded that the requested permit may be issued without detriment to the District.

8. Recommendations

It is recommended that permit be issued subject to the general and following specific provisions:

1. Permittee shall relieve the District of all expense in connection with the maintenance repair and operation of the structure and shall assume all liability in connection with or resulting therefrom.

2. This permit is for maintenance and operation of the outlet structure only on the District right of way and is valid only to the extent of this District's jurisdiction. The permit may not be construed to allow the discharge of industrial waste or sewage.

File No. 28
Stream: Laguna Dominguez Flood Control System-Dominguez Channel
Date Issued: When typed
Name: Shell Chemical Corporation
P. O. Box 211
Torrance, California
Attention: Mr. M. Voogd
Plant Manager

Permit Application No. 55327-A
Expires: Upon 30 days' written notice
(Starting within: xxxx)

Phone: Davis 9-1141

TORRANCE
SP-0015650

to operate and maintain an outlet structure for a 30-inch pipeline constructed on the Dominguez Channel right of way about 600 feet below Main Street, under Permit No. 45174, issued on December 17, 1945 to the Office of Rubber Reserve, Reconstruction Finance Corporation.

Application Dated: June 10, 1955
Authority: B/S dated March 28, 1950
Notify: R. H. Ortiz, Capitol 2-8151, Station 341
Signed: N. B. Hodgkinson, Division Engineer
Fees: Aplication - $5.00.

9. References

(a) Paragraph 1, this report.

(b) District Map No. 28-FD 57.

(c) Permit No. 45174 dated December 17, 1945 to Office of Rubber Reserve.

10. Carbon Copies

Mr. Bittman (2)
Mr. Hodgkinson (King)

CM:ea

TORRANCE
SF-0015651

June 10, 1955

Los Angeles County Flood Control District
Mr. H. E. Hedger, Chief Engineer
P. O. Box 2418
Terminal Annex
Los Angeles 54, California

Gentlemen:

Pursuant to a report to the Honorable Board of Supervisors of The County of Los Angeles from the Office of County Surveyor and County Engineer, dated November 29, 1945, a permit was granted to the operating agents of the Office of Rubber Reserve to drain waste water into Dominguez Channel. The plants are located between 190th Street and Del Amo, and between Normandie Avenue and Figueroa Street with joint disposal facilities into Dominguez Channel near Main Street. The report was signed by Alfred Jones, H. O. Swartout, H. E. Hedger, and A. M. Rawn.

When the Government owned synthetic rubber plants were sold earlier this year to private industries, the styrene, butadiene and copolymer plants covered by the permit of 1945 were sold to Shell Chemical Corporation. Since April 25, 1955, Shell Chemical Corporation has owned and operated these plants. There was no cessation in operations, and no change in the process involved in the transfer of ownership.

It is our understanding from your Mr. Raye C. King that the original permit to use Dominguez Channel for the drainage of industrial liquid wastes expired with the change in ownership. Mr. King requested that we submit an application for a new permit. The purpose of this letter is to apply for a permit in the name of Shell Chemical Corporation to continue using Dominguez Channel as the receiver of industrial liquid wastes. The wastes are discharged into the channel at a point about 600 feet east of Main Street.

Very truly yours,

SHELL CHEMICAL CORPORATION

ORIGINAL SIGNED BY M. VOOGD

M. Voogd
Plant Manager

Same as 8411

TORRANCE
SP-0015652

~~[illegible]~~ SHELL CHEM TO TORRANCE R/W DOC.

L I C E N S E

SR-705

THIS AGREEMENT, made this 25th day of August, 1954, by and between the FEDERAL FACILITIES CORPORATION, an agency and instrumentality of the United States, successor in interest to the Reconstruction Finance Corporation, Licensor (hereinafter referred to as the "Corporation"), and the DEPARTMENT OF WATER AND POWER OF THE CITY OF LOS ANGELES, Licensee,

WITNESSETH: For a valuable consideration and of the keeping and performance by Licensee of the terms and conditions hereof on its part to be kept or performed, the Corporation hereby gives permission to Licensee to construct and maintain water meter vaults and appurtenances in connection therewith over property owned by the Corporation in the vicinity of Knox Street and Vermont Street in the County of Los Angeles, State of California, as more particularly shown on drawing attached hereto, marked Exhibit "A", made a part hereof and by reference incorporated herein, for use and at the request of the Corporation, described as follows:

Parcel No. 2

The westerly 20 feet of the southerly 20 feet of Lot 21, Tract No. 4671, as per map recorded in Book 56, Pages 30 and 31 of Maps, in the office of the Recorder of Los Angeles County.

Parcel No. 3

The westerly 25 feet of the easterly 45 feet of the southerly 25 feet of Lot 28, Tract No. 4671, as per map recorded in Book 56, Pages 30 and 31 of Maps, in the office of the Recorder of Los Angeles County.

Parcel No. 4

The westerly 30 feet of the easterly 70 feet of the northerly 20 feet of the southerly 85 feet of Lot 43, Tract No. 4671, as per map recorded in Book 56, Pages 30 and 31 of Maps, in the office of the Recorder of Los Angeles County.

Parcel No. 5

The easterly 30 feet of the westerly 95 feet of the southerly 30 feet of the northerly 145 feet of Lot 55, Tract No. 4671, as per map recorded in Book 56, Pages 30 and 31 of Maps, in the office of the Recorder of Los Angeles County.

TORRANCE
SP-0015653

W-20403
R/W 9187

IT IS UNDERSTOOD AND AGREED that the foregoing permission is given upon and subject to the following terms and conditions:

1. No greater right or permission is hereby given than the right which the Corporation has or by these presents can legally give.

2. Licensee hereby acknowledges title of the Corporation in and to the premises above described and agrees never to assail or resist the same, and agrees that Licensee's use and occupancy of said premises shall be referable solely to the permission herein given.

3. In exercising the permission herein given, Licensee shall at all times observe and comply with all laws and lawful regulations applicable in the premises.

4. Licensee hereby undertakes and agrees to release, hold harmless and indemnify the Corporation from and against any and all claims, loss, demands, expense, damage and/or liability whatsoever, for injuries to persons or damage to property, in any manner arising by reason of the exercise or enjoyment by Licensee of any right or permission herein given or by reason of any failure on the part of Licensee to keep or perform any of the terms, conditions or agreement hereof which, on the part of Licensee hereunder, are to be kept or performed.

5. Licensee will pay for all materials placed upon, joined or affixed to said premises by or at the instance of Licensee and will pay in full all persons who perform labor upon said premises at the instance of Licensee, and will not suffer or permit any liens of any kind or nature to be levied against said premises for any work done or materials furnished thereon at the instance or request of Licensee.

6. Licensee will at all times exercise the permission herein given in such manner as will not injure or interfere with the full use of the premises by the Corporation, its successors or assigns.

7. The parties herein shall have the right of assignment to their successors in interest.

8. Regardless of the manner or duration of use or occupancy of said premises by Licensee and regardless of the permanent character of any works or structures constructed or installed therein or thereon by Licensee, this license may be revoked by either parties, their successors or assigns at any time by the giving of ninety days' notice of revocation to the other party, with Licensee's option to remove or abandon the installation.

TORRANCE
SP-0015654

IN WITNESS WHEREOF, the parties hereto have caused this instrument to be executed the day and year first above written.

ATTEST:

Douglas S Sherwin
Secretary

FEDERAL FACILITIES CORPORATION

By E. D. Kelly
E. D. Kelly, Director
Office of Synthetic Rubber

LICENSOR

DEPARTMENT OF WATER AND POWER OF THE CITY OF LOS ANGELES

SAMUEL B. MORRIS
GENERAL MANAGER AND CHIEF ENGINEER

ATTEST:

(Title)

By Burton S. Grant
BURTON S. GRANT
Chief Engineer of Water Works and Assistant Manager

LICENSEE

APPROVED AS TO FORM AND LEGALITY
SEP 2 1954
By Geo. K. Whitworth
GEO. K. Whitworth, Deputy

cgw
(9/3/54 memo)

DESCRIPTION APPROVED | CHECKED
Rcy
C. J. ITTER ENGINEER OF DESIGN
LOS ANGELES WATER SYSTEM

TORRANCE
SP-0015655

Original forwarded to Rick 9/20/48 as attachment to B+20151

Torrance Plant

1948 SEP [illegible] 20

File

L I C E N S E

THIS AGREEMENT, made and [illegible] this 1st day of May, 1948, by and between the DEPARTMENT OF WATER AND POWER OF THE CITY OF LOS ANGELES, hereinafter called the Licensor, and RECONSTRUCTION FINANCE CORPORATION, an instrumentality of the United States Government, hereinafter called the Licensee.

WITNESSETH: That for and in consideration of the sum of Sixty ($60.00) Dollars and other considerations herein mentioned, the Licensor hereby gives permission to the Licensee to use for the respective purposes as shown in red on the map attached hereto and marked Exhibit "A", and by reference incorporated herein, numbered thereon as follows:

NUMBERED	MAP LOCATION	PURPOSE OF USE
1	E. 3+87	Wire Fence
2	E. 4+02	Overhead Wires
3	E. 4+10.50 to 4+60	Roadway
4	E. 4+25	12" Con. Pipe Parallel to Railroad Track
5.	E. 4+45	12" Con. Pipe Parallel to Railroad Track
6	E. 5+50	8" Water Pipe
7	E. 5+80	2" Ammonia Pipe
8	E. 6+46.5	Overhead Wires
9	E. 8+38.25	4" Oil Line
10	E. 8+47.42	Centerline 10" Pipe Trench and 2" Conduit
11	E. 13+70	8" Water Pipe
12	E. 13+78 to 13+87	Number of Small Pipes, Oil & Water
13	E. 14+03.5	10" Oil Sewer
14	E. 14+38.5	10" Sanitary Sewer
15	E. 15+95	Centerline 8 foot roadway
16	E. 16+04.5	Overhead Wires
17	E. 16+19±	Fence

all of which are located upon the Department of Water and Power of The City of Los Angeles' fee simple power transmission line right of way between Vermont Avenue and Figueroa Street, north of James Street in Los Angeles County, California.

IT BEING UNDERSTOOD AND AGREED, that the Licensee will pay the Licensor the additional sum of Sixty ($60.00) Dollars on the 1st day

TORRANCE
SP-0015656

P-11998

of May, 1949, and a like sum annually thereafter during the continuance of this license agreement.

IT BEING FURTHER UNDERSTOOD AND AGREED, that no greater right or permission is hereby granted than the right which the Licensor has or can legally give, and in consideration of such permission being granted by the Licensor to the Licensee, the Licensee hereby promises and agrees as follows:

1. That this license shall be revocable by Licensor at any time upon 6 months' written notice to Licensee at the Office of Rubber Reserve, 811 Vermont Avenue Northwest, Washington, D.C., and Licensee shall remove, and hereby expressly agrees to remove from the above described premises any and all property placed upon said premises by virtue of this license.

2. In case of the failure or refusal of said Licensee to perform any of the agreements on its part to be performed, as herein contained, all the rights and privileges hereby granted shall at the option of the Licensor, cease and terminate, and the Licensor shall have the right to remove all structures, materials, equipment and apparatus from the said premises which shall have been placed thereon by the said Licensee by virtue of this license, and the said Licensee hereby expressly agrees to indemnify and save harmless the Licensor against any expense incurred or liability assumed by the Licensor as a result of the failure or refusal of the Licensee to remove the said equipment from the premises or to perform any of the agreements herein contained.

3. The Licensee agrees to hold harmless and indemnify the Licensor, its successors and assigns, and anyone claiming through the Licensor, from and against any and all loss, damage and/or liability which it or they may sustain or bear or to which it or they may be put, resulting in any manner by reason of the use of said property by the Licensee, its successors or assigns.

4. Said Licensee will further pay for all material placed upon, joined or affixed to said premises, and pay in full all persons who perform labor upon said premises, and will not permit or suffer any liens of any kind or nature to be levied against the said premises for any work done or material furnished thereon at the instance or request of the said Licensee.

5. And the Licensee will at all times exercise the permission hereby given in such manner as will not injure or interfere with the full and complete use of the property by the Licensor.

6. That this license shall also include the right to cross and recross the property of the Licensor included within the fenced enclosure and the Licensee agrees that no inflammable material shall ever be stored upon the Licensor's property shown on the map marked Exhibit "A".

TORRANCE
SP-0015657

7. That the Licensor shall at all times have free and immediate access to its property shown as outlined in yellow as power transmission line right of way owned by the City of Los Angeles in fee simple, and that the two gates entering and leaving said right of way must be maintained by Licensee at all times in good operating condition and the Licensor shall have the right to maintain its locks on these two gates for immediate access to its right of way.

8. All pipe trenches shall be covered and protected by Licensee in such manner as to allow travel of large trucks, automobiles and transmission line repair equipment as Licensor may desire, except only during short periods of construction and then no longer than is absolutely necessary.

IN WITNESS WHEREOF, the parties hereto have caused this instrument to be executed the day and year first above written.

APPROVED AS TO FORM AND LEGALITY
RAY L. CHESEBRO
City Attorney

MAY 6 1948

By _____
GEO. K. WHITWORTH, Deputy

DESCRIPTION APPROVED

_____

AUTHORIZED BY RES. 157
AUG 31 1948

DEPARTMENT OF WATER AND POWER OF THE CITY OF LOS ANGELES BY BOARD OF WATER AND POWER COMMISSIONERS OF THE CITY OF LOS ANGELES

By _____
President

And _____
Secretary

Licensor

RECONSTRUCTION FINANCE CORPORATION
OFFICE OF RUBBER RESERVE

APPROVED:

_____
Chief, Administration Division

RECONSTRUCTION FINANCE CORPORATION
By--SHELL CHEMICAL CORPORATION, AGENT

By _____
Vice President

And _____
Secretary

Licensee

APPROVED H. L. Caldwell
Electrical Engineer
in Charge of Operation

TORRANCE
SF-0015658

#110a

6

L I C E N S E

THIS AGREEMENT, made and entered into this 1st day of May, 1948, by and between the DEPARTMENT OF WATER AND POWER OF THE CITY OF LOS ANGELES, hereinafter called the Licensor, and the RECONSTRUCTION FINANCE CORPORATION, an instrumentality of the United States Government, hereinafter called the Licensee.

WITNESSETH: That for and in consideration of the sum of Fifteen Dollars ($15.00) per year payable annually in advance, and other considerations herein mentioned, the Licensor hereby gives permission to the Licensee to construct a fireproof fence across the property of the Department of Water and Power used as a power transmission line right of way at Vermont and Normandie Avenues connecting the fence of the Licensee on its adjoining property enclosing all Licensee's plant properties north of James Street into one area, and permit the Licensee ingress and egress across said right of way, and also the right to construct and maintain a 2-1/2 inch underground slurry line, a 2 inch liquid propane line and a 20 foot roadway called Avenue "B", but not including in this license the right to store any material thereon without the written permission of Licensor, as more fully appears and is shown in red on the map attached hereto, and marked Exhibit "A", hereby referred to and by reference incorporated herein.

IT BEING UNDERSTOOD AND AGREED that no greater right or permission is hereby granted than the right which the Licensor has or can legally give, and in consideration of such permission being granted by the Licensor to the Licensee, the Licensee hereby promises and agrees as follows:

1. That this license shall be revocable by Licensor at any time upon 6 months' written notice to Licensee at P. O. Box 500, Gardena, California, and Licensee shall remove, and hereby expressly agrees to remove from the above described premises any and all property placed upon said premises by virtue of this license.

P-15540

TORRANCE
SP-0015659

2. In case of the failure or refusal of said Licensee to perform any of the agreements on its part to be performed, as herein contained, all the rights and privileges hereby granted shall at the option of the Licensor, cease and terminate, and the Licensor shall have the right to remove all structures, materials, equipment and apparatus from the said premises which shall have been placed thereon by the said Licensee by virtue of this license, and the said Licensee hereby expressly agrees to indemnify and save harmless the Licensor against any expense incurred or liability assumed by the Licensor as a result of the failure or refusal of the Licensee to remove the said equipment from the premises or to perform any of the agreements herein contained.

3. The Licensee agrees to hold harmless and indemnify the Licensor, its successors and assigns, and anyone claiming through the Licensor, from and against any and all loss, damage and/or liability which it or they may sustain or bear or to which it or they may be put, resulting in any manner by reason of the erection, maintenance or operation of said fence, material and equipment or use by the Licensee, its successors or assigns, over and across the above referred to property.

4. Said Licensee will further pay for all material placed upon, joined or affixed to said premises, and pay in full all persons who perform labor upon said premises, and will not permit or suffer any mechanic's liens of any kind or nature to be levied against the said premises for any work done or material furnished thereon at the instance or request of the said Licensee.

5. And the Licensee will at all times exercise the permission hereby given in such manner as will not injure or interfere with the full and complete use of the property by the Licensor.

6. Licensee agrees to provide access gates at both ends of Licensor's right of way where it is crossed by Licensee's plant fence, and to make provision at each of these gates for two padlocks, one padlock to be provided by Licensor and all keys thereto to be retained by Licensor and one padlock to be furnished by Licensee who will retain all keys to this second lock.

7. Licensee agrees to make no permanent installations within the 100 feet right of way such as buildings, bins, cranes, pumps, etc.

8. Licensee agrees to refrain from creating any fire hazards, or building any fires within said right of way.

9. Licensee agrees that it will not place or store any materials on Licensor's property without the written consent of Licensor, and that Licensor shall at all times have full and complete access to its property through the gates so provided without delay or hindrance.

TORRANCE
SP-0015660

IN WITNESS WHEREOF, the parties hereto have caused this instrument to be executed in their behalf by their officers thereunto authorized the day and year first above written.

APPROVED AS TO FORM AND LEGALITY
RAY L. CHESEBRO
City Attorney

MAY 6 1948

By _____
GEO. K. WHITWORTH, Deputy

AUTHORIZED BY RES. 1511
AUG 3 1 1948

APPROVED _____
Electrical Engineer
in Charge of Operation

DEPARTMENT OF WATER AND POWER OF THE CITY OF LOS ANGELES BY BOARD OF WATER AND POWER COMMISSIONERS OF THE CITY OF LOS ANGELES

By _____
President

And _____
Secretary

LICENSOR

RECONSTRUCTION FINANCE CORPORATION
By--THE DOW CHEMICAL COMPANY, AGENT

By _____ 6-29-48
Manager

And _____
Administrative Assistant

LICENSEE

APPROVED:

RECONSTRUCTION FINANCE CORPORATION

By _____
Asst. Chief, Administration Division
Office of Rubber Reserve

TORRANCE
SP-0015661

TABLE I

Effluent Specifications

Drainage of liquid wastes into Dominguez Channel is covered by Industrial Waste Permit No. 1448, issued by the County of Los Angeles, Department of County Engineer, Industrial Waste Division on July 28, 1955. Special conditions and limitations imposed by the permit pertaining to effluent quality are quoted below:

1. "Wastes discharged into Dominguez Channel shall not cause formation of objectionable deposits of sludge. In general, settleable solids shall not exceed 1.0 cc per liter.

2. "Wastes discharged into Dominguez Channel shall not contain oil in excess of 75 ppm and shall not cause objectionable discoloration of receiving waters in the channel except for brief periods of emergency; and in such event only in the immediate vicinity of the point of discharge.

3. "Effluent discharged shall not cause damage to private or public structures or property. The pH shall be maintained at not less than 6.5.

4. "Discharged effluent shall not contain toxic wastes in concentrations sufficient to endanger public health or affect the use of lands in the vicinity for agricultural purposes.

5. "Wastes discharged shall not cause or create odors to the extent that they are a public nuisance. Dissolved sulphides in such discharges shall not exceed 1.0 ppm.

6. "All solid industrial wastes shall be transported to a legal point of disposal."

TORRANCE
SW-0013150

SFUND RECORDS CTR
2051891

SHELL CHEMICAL CORPORATION

POST OFFICE BOX 211
TORRANCE, CALIFORNIA

June 6, 1958

DUPLICATE DOCUMENT
Do not send to Records Center

HFC	MWS	MMC	DEC
MAC	JUN 9 1958 LAND DEPT.		MRH
JBM			Digest
			Oblig.
RAD	STAMPED IN BY:		Title
R/W	9 A.M.		Fed.
			HAB
Owner-ship	FILE	Return to 607	

Shell Oil Company
1008 West Sixth Street
Los Angeles 54, California

Attention Mr. M. W. Sheppard

Gentlemen:

We have been requested to obtain an industrial waste permit as described completely in the attached letter from the County of Los Angeles, Department of County Engineer, in order to continue dumping on a plot of land owned by Shell Chemical Corporation in the vicinity of the Torrance Plant.

The site referred to by the County Engineer lies between Moneta Avenue and Main Street north of Knox Street. It is identified on the maps as Lot 115. Lot 115 has been used since 1943 as a dump site for concrete, brick, asphalt paving, dirt and similar noncombustible, water insoluble rubbish originating solely from the Torrance Plant. During Government ownership, a portion of the northeast corner of Lot 115 was deeded to the Los Angeles County Flood Control District for future realignment of Dominguez Channel. Since Shell Chemical Corporation purchased the Torrance Plant, including Lot 115, a portion of the southwest corner of the plot was sold to the State of California, Division of Highways, for future freeway construction. The part of Lot 115 that remains consists of more than four acres, but less than five. It is desired to continue using Lot 115 in the same manner it has been utilized in the past; i.e, a Class III private disposal site, not open to the public, with land reclamation the ultimate aim.

It is our understanding that you normally handle problems of this type and we would greatly appreciate your taking the necessary action to obtain the permit. To assist you in the project, we will engineer the plan as outlined on page 5, section (b) of the attached "Procedure for Establishment and Regulations for Operation of Waste Disposal Facilities" and provide you with the required number of prints. Assistance in obtaining the answers to questions which may arise in connection with your work can be obtained directly by telephoning Mr. A. E. Martin - Senior Technologist (FAculty 1-2340) at the Torrance Plant. Art. STYRENE

Ex-568

Yours very truly,

M. Voogd
Plant Manager

Attachment

TORRANCE
SP-0015812

Form 1103—1M Sets—12-57
DEPARTMENT OF PUBLIC WORKS
Bureau of Sanitation
SEWER MAINTENANCE DIVISION
Room 750 City Hall, Los Angeles 12
Michigan 5211, Station 758

CITY OF LOS ANGELES
California

Document #32 (I think) and related ones.

PERMIT W 16725

August 15, 1958

INDUSTRIAL WASTE PERMIT

Revocable permission is hereby granted to

Shell Chemical Corporation (Name of Firm or Individual) P. O. Box 211, Torrance, California (Address)

to discharge the following indicated class or classes of industrial waste liquids ~~xxxx~~ stated to be 7,185 gallons per 24-hour day from:

Process "A" - Polymerization Catalysis;

Process "B" - Lime Soda-Ash Water Softening;

from the premises located at 20021 South Vermont Avenue

into the 12-inch clay pipe sewer in that street

subject to the conditions marked (x) on the reverse side of this sheet and to the further condition that the permittee agrees to take such additional steps in the future as may then be required by the Director or his authorized representative to prevent any damage, danger, or nuisance from the introduction of these waste liquids into the receiving system.

5 7677 0101 3 5 1 25

RECOMMENDED:

STERLING C. BUESCH
Industrial Waste Engineer

APPROVED:

W. A. SCHNEIDER, Director
Bureau of Sanitation

By ALVIN A. APPEL
Sewer Maintenance Superintendent

This permit becomes effective upon receipt of the fee of $10.00

Cancel 9/10 OB 9-25-72 E

Form 1103—1M Sets—12-57
DEPARTMENT OF PUBLIC WORKS
Bureau of Sanitation
SEWER MAINTENANCE DIVISION
Room 750 City Hall, Los Angeles 12
Michigan 5211, Station 758

CITY OF LOS ANGELES
California

PERMIT W 16933

August 18, 1958

INDUSTRIAL WASTE PERMIT

Revocable permission is hereby granted to

Shell Chemical Corporation (Name of Firm or Individual) P. O. Box 211, Torrance, (Address) California

to discharge the following indicated class or classes of industrial waste liquids ~~xxxx~~ stated to be 5,315 gallons per 24-hour day from:

Lime Soda-Ash Water Softening
COPPER AMONIUM ACETATE
SLUDGE FROM SEPARATOR

from the premises located at 19821 ~~South Figueroa Street~~ HAMILTON AVE

into the 15-inch clay pipe sewer in Del Amo Street

subject to the conditions marked (x) on the reverse side of this sheet and to the further condition that the permittee agrees to take such additional steps in the future as may then be required by the Director or his authorized representative to prevent any damage, danger, or nuisance from the introduction of these waste liquids into the receiving system.

~~5~~ 7 73 53 ~~21~~ 02 ~~21~~ 19 3 5 1 ~~25~~ 33

RECOMMENDED:

STERLING C. BUESCH
Industrial Waste Engineer

APPROVED:

W. A. SCHNEIDER, Director
Bureau of Sanitation

By ALVIN A. APPEL
Sewer Maintenance Superintendent

This permit becomes effective upon receipt of the fee of $10.00

Cancel 9/13

11-2-72 CT

M59-0805

SHELL CHEMICAL CORPORATION
TORRANCE PLANT

DEVELOPMENT REPORT
SEPTEMBER 1959

INVESTIGATION NO. T-U-2	EFFLUENT STUDIES
REPORT NO. 3	SMOKELESS FLARING OF ETHYLENE PURIFICATION UNIT GASES
REPORTED BY:	W. C. TOWNER, A. E. MARTIN
REVIEWED BY:	L. E. HANSTEDT, F. T. TYMSTRA
PARTICIPANTS IN WORK:	L. E. HANSTEDT, A. E. MARTIN, W. C. TOWNER, AND J. F. WOICIK

SUMMARY

Incomplete burning of gases from the ethylene purification unit resulted in a program to determine and correct the inadequacies of the flaring system. Through this investigation a flaring system which satisfies the Air Pollution Control District requirements has evolved. The significant features of the system are a variable area orifice for sensing hydrocarbon vapor flow and a steam proportioning control which together cover an unusually wide range of conditions.

INTRODUCTION

When Shell Chemical Corporation purchased the Styrene Plant in April 1955, new Los Angeles County Air Pollution Control District (APCD) permits were required because of the change in ownership. Renewal of the operating permit for the Styrene Plant flare which serves the ethylene purification only, was not granted. The APCD inspectors' disapproval was based on excessive steam at low flaring rates, and insufficient steam to prevent smoke at peak rates. Necessary revisions to achieve proper combustion control were determined and installed. The revised system now has a consistently nonsmoking flame for any gas being released over the entire capacity range of the flare. A description of the controlling conditions, and a comparison of the original and approved flaring systems are discussed. A theoretical presentation of the relationships for vapor flow through a variable rectangular area orifice submerged in water is also presented.

DISCUSSION

Basically, the requirements of the flare system for the ethylene unit are (a) that it have sufficient capacity to burn all the hydrocarbon discharged to it and (b) that sufficient combustion control be possible to produce a clear yellow, luminous flame to meet APCD requirements. Smoke emissions as dark or darker than No. 2 Ringelmann, except for three minutes per hour, is prohibited. APCD personnel object to a colorless flame on the grounds that combustion may be incomplete, and objectionable unburned hydrocarbons may be released to atmosphere. The control of the flame luminescence is accomplished by varying the amount of steam admixed with the burning hydrocarbon.(1) The factors that affect steam flow requirements listed in order of relative importance are:

1. Hydrocarbon Flow Rate: In the subject installation any quantity of hydrocarbon can be flared ranging from the equivalent of a small leak to 360,000 SCFH, or approximately 25,000 lb/hr. A fixed amount of steam is required for each pound of a given fuel burned to produce a flame having the desired characteristics. In order to maintain the proper steam-hydrocarbon ratio throughout the wide flaring range, a sensitive and highly responsive steam control system is necessary.

2. Unsaturation: The amount of unsaturated components, such as ethylene and propylene in the materials discharged to the flare can vary from 2%m to 95%m. The more unsaturated the compound, the more steam is required for proper combustion. The best information available indicates the steam requirement may vary from 0.15 pound per pound of saturated hydrocarbon to 2.75 pounds per pound of 100% unsaturates.

3. Gas Composition: The hydrocarbon stream can vary in composition from one containing 32%m H_2 and 65%m CH_4 to one composed of C_5's and higher. As the number of carbon atoms in the gas molecules increase, the density increases; consequently more air and steam are required per cubic foot of fuel to burn the hydrocarbons completely.

(1) See steam-gas ratio section in Appendix for further discussion.

4. Temperature: At the point of entry into the flare line, the temperature of the hydrocarbon stream can range from below minus 100°C to above 145°C. The temperature affects the density of the gas.

For practical reasons, the ethylene unit flare system is designed to control steam flow on the basis of gas volume flow by sensing pressure differential across a variable orifice. As indicated previously, the steam hydrocarbon ratio needed for proper flame control is dependent on a weight basis. Therefore, as the density of the gas increases, more pounds of material are discharged per cubic foot of gas and more steam is required if proper flame control is to be maintained. More steam per pound of hydrocarbon is also required with increasing unsaturation. A means of controlling each factor affecting steam flow is included in the new control system.

Description of Original Flare System

At the time Shell Chemical purchased the Styrene Plant, proper flame control of flare gases was severely restricted by insufficient supply and inadequate control of the steam.

The existing equipment in April 1955 (Figure 1) consisted of a gas gathering system within the ethylene purification unit, a 12-inch flare header, blowdown vessel, a flame arrestor, and a flare stack. The flare stack is a 16-inch O.D. section 100 feet high, located about 600 feet southwest of the control room. At the top of the stack was a 1.5-inch steam ring fitted with 12 steam injection tips 1/4 inch in diameter and a single pilot burner to ignite the gases. A 2-inch steam line delivered 160 psig steam through a 2-inch motor valve into a 1.5-inch line leading to the top of the flare. The motor valve opened fully if pressure in the flare line exceeded one inch of water pressure. There were two by-passes around the motor valve. The smaller by-pass valve was kept partially open to prevent smoking when gas discharges were too small to actuate the automatic controls. At flare line pressures barely above one inch of water pressure, excess steam caused incomplete combustion and a colorless flame. Above half of the peak flaring rate the steam supply was insufficient and caused a smoky flame. At the peak flaring rate, heavy black smoke was emitted.

The system described was inadequate and presented two primary problems: (a) the provision of a sufficient supply of steam at maximum flaring rate and (b) a means for controlling the steam flow to produce proper combustion at all flaring rates. The system developed to solve this dual problem is described below.

Approved Flare System

After investigating, testing and revising, a flaring system was developed to meet all APCD requirements (Figure 2). The parts retained from the original system consist of: the flare gas gathering system within the ethylene unit, the main flare gas header, blowdown vessel, flame

arrestor and 100-foot stack. Additions and revisions to the fundamental equipment are shown on an attached drawing(2) and photograph. Additions and revisions were:

1. Steam Supply: The steam supply and mode of addition to the hydrocarbon were changed. The 2-inch supply line, control valve, and by-pass were replaced with 3-inch equipment. The 1.5-inch annular ring with the 12 quarter-inch jets was removed from the top of the flare stack (*17). An Esso type flare tip was fabricated and installed in place of the ring. The Esso tip consisted of an open end 3-inch steam line concentric with the flare stack as shown in Figure 2. At first, the steam admission point was 21 inches from the top. The admission point was lowered to 36 inches below the top because smoking occurred at low hydrocarbon discharge rates even with excess steam - seemingly the result of a steam jet effect. No further smoking difficulties have been encountered.

2. Steam Control System: The flare control system consists of two essential portions: hydrocarbon flow measurement facilities and steam valve control units.

Hydrocarbon flow sensing(3) is accomplished by measurement of a pressure differential created as the flare gas passes through a variable orifice(4) sealed with water contained in the water seal vessel (*18). The high pressure tap for the differential is taken from the main flare header, and the low pressure tap opening is positioned horizontally 1.5 inches below the water level inside the water seal vessel. An operating water level of 1.5 inches is maintained above the low pressure tap opening and the top of the variable orifice to provide a reservoir of water to compensate for water losses during high flaring rates. For pressure surges up to 10 psig, the control instruments are protected from water carry-over through the low pressure tap line by a combination of a 20-foot piping loop above the water level, and a natural gas purge through the low pressure tap. Liquid "blocks" in the pressure tap lines are prevented by a continual downward slope of the line to either the sensing point or knockout pots (*7) ahead of the differential pressure cell. The water seal vessel is 4 feet in diameter by 10 feet high. The flare gas enters the side of the vessel near the top, passes down through a pipe containing two orifice slots, and out through a 32-inch diameter York mesh demisting section at the exit from the vessel. The demister prevents fouling of a 10-inch Shand and Jurs flame arrestor (*19) mounted immediately above the water seal vessel in the 10-inch discharge line to the flare stack. A drain is provided at the bottom of the seal vessel and is connected to a Dempster bucket.

---

(2) Drawing YT-8198 is a schematic of the flare system.
Numbers within the report preceded by (*) refer to numbers on drawing YT-8198 enclosed in diamonds.
(3) See Gas Measurement Problem Section in Appendix
(4) See Variable Orifice Calculation in Appendix

A continuous overflow of 1 gpm of cooling water provides a constant water level in the vessel and the zero point for the control instruments. The water overflows to the sewer through a vertical 1.5-inch diameter section of pipe constructed with a 25-foot seal loop (*16) and a vacuum breaker. The seal loop will retain a vessel pressure of more than 10 psig which is greater than the pressure expected during a maximum gas discharge. A 1/8 x 1-inch drain slot has been cut in the overflow pipe 1.5 inches from the normal overflow point at the top of the pipe. This drain slot permits zeroing of instruments when atmospheric pressure exists in the flare header. A 12-inch shield surrounds the overflow pipe and the low pressure tap opening. The purpose of the shield is to minimize liquid surface disturbances around the low pressure sensing point that might cause fluctuating signals to the steam control instruments. The shield is open-ended and extends from 8 inches above the water level to 8 inches above the bottom curvature on the vessel.

The orifice for the flared gas is two rectangular slots cut in a 12-inch diameter, 16-gage, open-end, stainless steel pipe immersed in the seal water. The two slots are 2 inches wide by 30 inches long and are located 180° apart in the immersed portion of the steel pipe. The slots are oriented at 90° to the shielded area. Approximately 20 inches of slot opening is utilized for control. The excess portion of the slots plus an 8-inch skirt act to prevent discontinuous gas flow rates when the 20-inch control range is exceeded. If the gas flow should exceed the full length of the pipe, free flow is permitted through the open bottom. The tops of the slots are immersed 1.5 inches in the seal water and are at the same level as the open end of the low pressure tap and the 1/8 x 1-inch drain slot in the water overflow pipe. Flow through the variable orifice slots begins as the line pressure exceeds 1.5 inches of water. As the flow increases, water is forced down the orifice pipe until sufficient slot area is exposed to provide a balance between the pressure of the gas entering the seal water vessel, the internal pressure of the vessel and the drop in pressure of the gas as it passes through the orifice area.

Twenty inches of water pressure differential is used as the control range for zero to maximum steam flow. The pressure differential is sensed by a Foxboro Type 13A differential pressure unit (*8) installed at the terminus of the high and low pressure taps. From the D/P cell, a pneumatic signal is sent to a Taylor pneumatic receiver-recorder (*5) and then to a Minneapolis-Honeywell pneumatic ratio relay (*4) which controls the air output to a 1-inch Masoneilan single port, linear, parabolic, control valve (*13) with a valve positioner, and a 3-inch Masoneilan single port, linear, parabolic, control valve (*14) with a Bailey valve positioner.

The relay ratio is set manually with a Moore air pressure regulator mounted in the ethylene unit control room. The air output ratio from the ratio relay is variable from 0.5:1 to 1.5:1 over a corresponding range of 3 to 15 psi air pressure signal from the Moore regulator. The normal position of the regulator is at a gage setting of 9 which corresponds to a ratio relay air output/input ratio of 1:1; this setting will proportion steam to burn feed gas properly in the relationship shown in Figure 3. The Moore regulator gage is calibrated to indicate

approximate settings for the common materials discharged to the flare. In any event, the regulator is adjusted as needed until the desired type of flame is produced. This adjustment compensates for gas composition and density and is independent of rate.

The 1-inch and 3-inch steam valves are adjusted to operate from closed to full open for air pressure signals of 3 to 5 and 5 to 15 psig, respectively. The flow characteristics of the small valve meet the steam requirements for low flaring rates. To meet the steam rates for the higher gas flows, the flow characteristics for the large valve are set by a properly machined cam in the Baily positioner.

To achieve proper burning, fast instrument response is necessary. The time constants of the instrument control loop were shortened by close coupling of the instruments and selecting equipment with high supply and exhaust pilot capacities. The Bailey valve positioner required the maximum pilot size of 3/16 inch. Proper burning is aided also by a compensating action of the flare facility which tends to cause the gas and steam flows to arrive simultaneously at the top of the stack. The compensation results from the sharp increase in differential pressure caused by the gas before it actually passes through the orifice. This transient differential pressure causes the steam valves to begin to open immediately and thereby shortens the differential time between the gas and steam flow arrival at the flame area.

Should a failure occur in the automatic steam control system, the control can be quickly switched to manual operation. A by-pass has been installed around the ratio relay so the air signal to the steam valves can be controlled directly from the ethylene unit control room. For this purpose, the ratio relay by-pass effectively converts the Moore air pressure regulator to a steam control valve through direct manual setting of the air pressure to the steam valve.

3. Flare Stack: After the flare gas passes through the flow sensing system and the seal water vessel, it is discharged through a flame arrestor into the flare stack. The gas enters the stack about 25 feet from ground level, travels upward and is mixed with steam about 3 feet from the top where the mixture is ignited. Condensate from the steam is drained from the flare stack through a loop seal to a Dempster bucket.

The gas-steam mixture is ignited by a group of three pilot burners arranged symmetrically around the stack top. The pilot ignitor system (*3) and pilots are standard John Zink Co. units designed to withstand wind velocities of 100 mph. The pilot ignitor system is used only to relight the pilots which normally operate continuously using ethylene unit residue gas at 8 psig for fuel. All controls for the ignitor system are located near the flare base.

Flow of fuel to the pilots is limited by a 1/8-inch restricting orifice in each of the three pilot fuel lines and measured by a gas meter (*2). Normally the pilot flames are colorless, but to permit daylight observation of pilot operation, the air supply to one pilot has been adjusted to produce a visible yellow flame.

4. Auxiliary Equipment: Between the ethylene unit and the flare stack, the gas header crosses two roads, once overhead and once underground. Should excessive accumulations of liquid occur in the line, high back pressures could easily develop, resulting in overpressuring of equipment in the operating unit. To prevent undesirable accumulations, means for removing them are provided at both crossings. At the unit side of the overhead crossing a 25-foot, liquid sealed loop (*1) of 1-inch pipe has been installed to permit continual drainage of any accumulated material. The drained liquids discharge to the oil sewer which flows to the primary skimmer where oily materials can be removed for disposal. Connections to both the condensate recovery and 200 psi steam headers are provided between the drain and the flare header. The condensate is used to test the drain and insure free flow to the sewer; the high pressure steam can be used to remove any drain blockage that may occur. The means for draining the underground road section are peculiar to this particular system because the section is below sewer level and cannot be drained directly. To remove accumulated liquid from this low portion of the line, a water operated Schutte-Koerting 1/2-inch jet (*15) is used intermittently to transfer material to the water seal vessel. The jet uses 3 gpm of seal water for operation and provides a 15-foot lift to the siphoned material. By siphoning to the seal vessel, any gas that is entrained will be separated and burned; while the liquid is discharged to the sewer.

A small auxiliary flare is located approximately 200 feet before the main flare on top of the flare header. It is used when maintenance is necessary on the main flare. Capacity of the auxiliary is comparatively low and, therefore, while it is in use the feed gas rate to the ethylene unit is not permitted to exceed 90% of the available feed gas compressor capacity. The auxiliary flare has a single pilot, which must be lighted with a torch. It is not provided with a flame arrestor, permanent steam connections, or automatic steam flow controls.

CONCLUSIONS

The system described for measurement of flow and control of combustion of gases discharged to the flare has been operated very satisfactorily for several months. On February 18, 1959, personnel from the Los Angeles County Air Pollution Control District inspected the facility and made favorable comments concerning the operation of the flare in comparison with other flares in Los Angeles County. An APCD permit to operate was granted.

Written by: A. E. Martin
A. E. Martin

W. C. Towner
W. C. Towner

Reviewed by: L. E. Hanstedt
L. E. Hanstedt

F. T. Tymstra
F. T. Tymstra

AEM:jc
9/8/59

SCHEMATIC OF FLARE STACK BEFORE REVISIONS

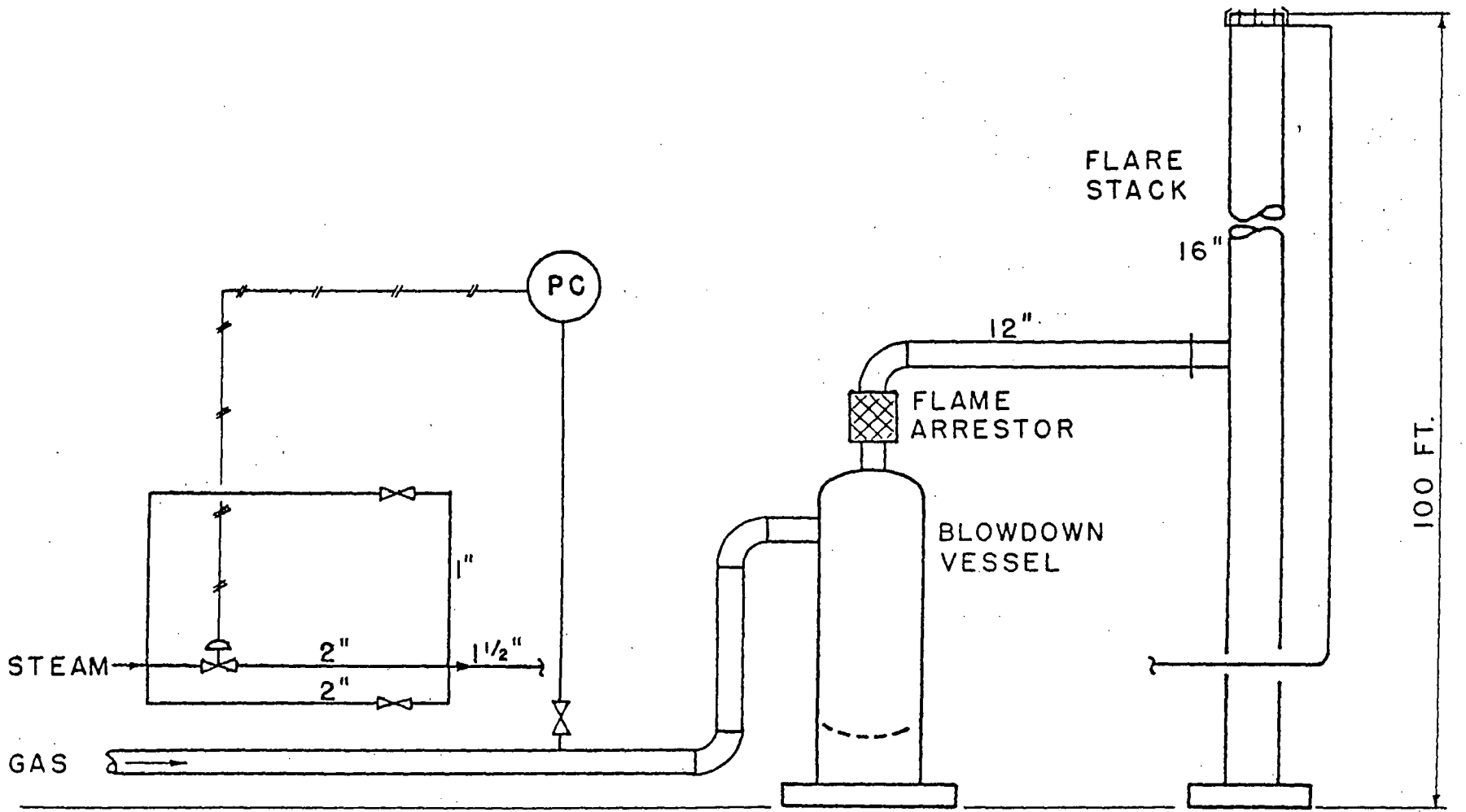

FIGURE 1

SCHEMATIC OF FLARE STACK AFTER REVISIONS

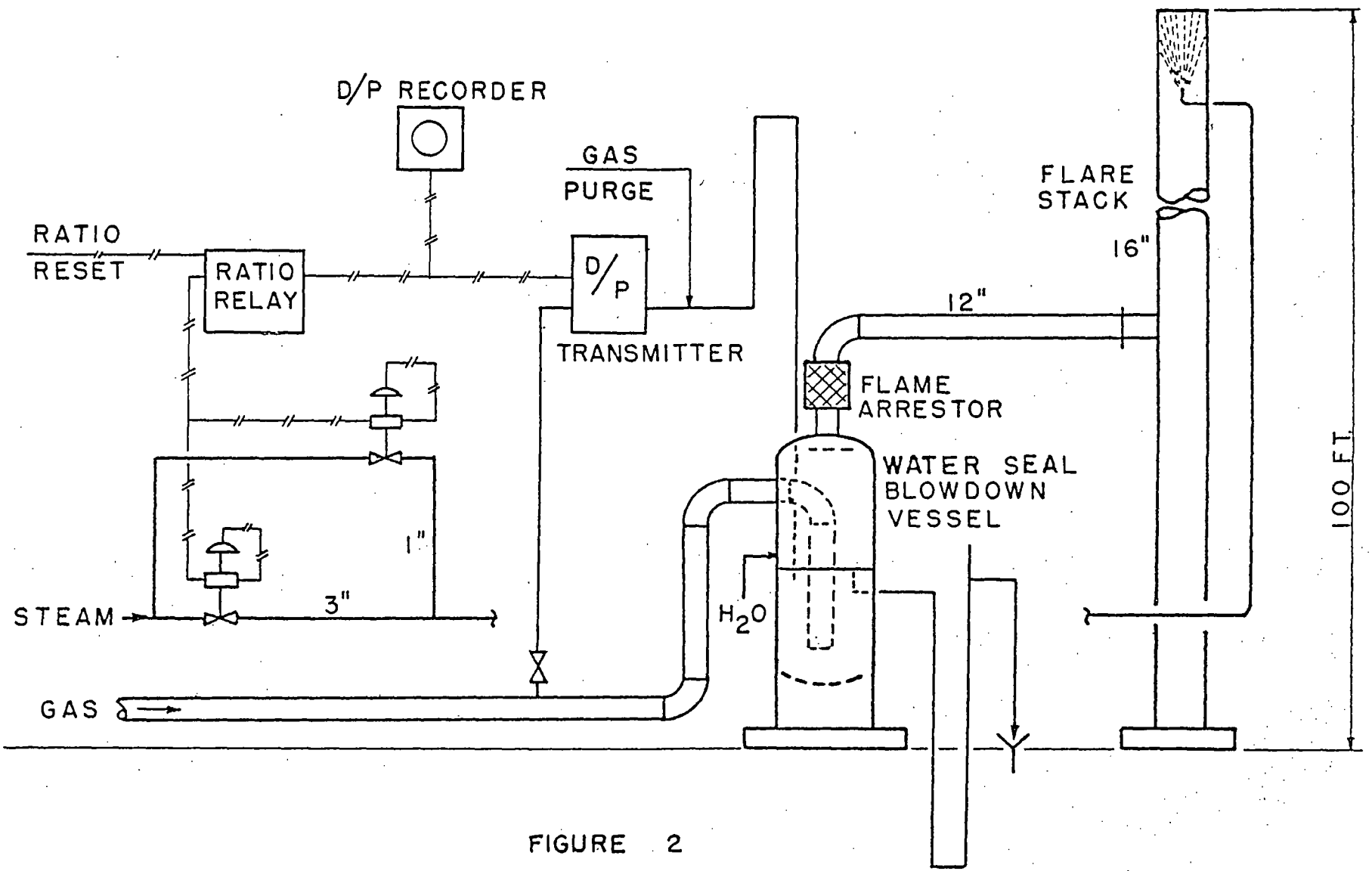

FIGURE 2

RELATIONSHIP OF STEAM TO HYDROCARBON

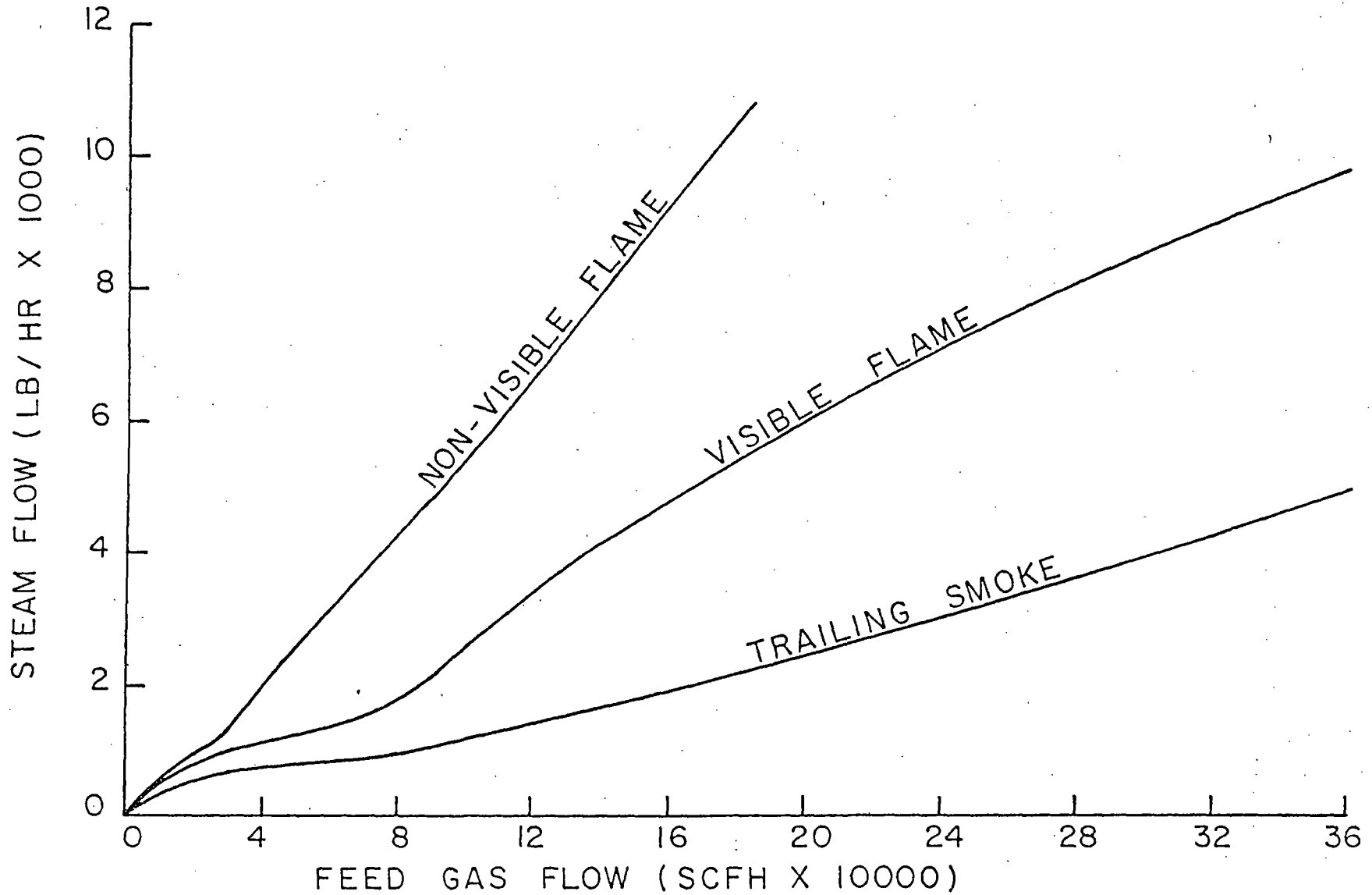

FIGURE 3

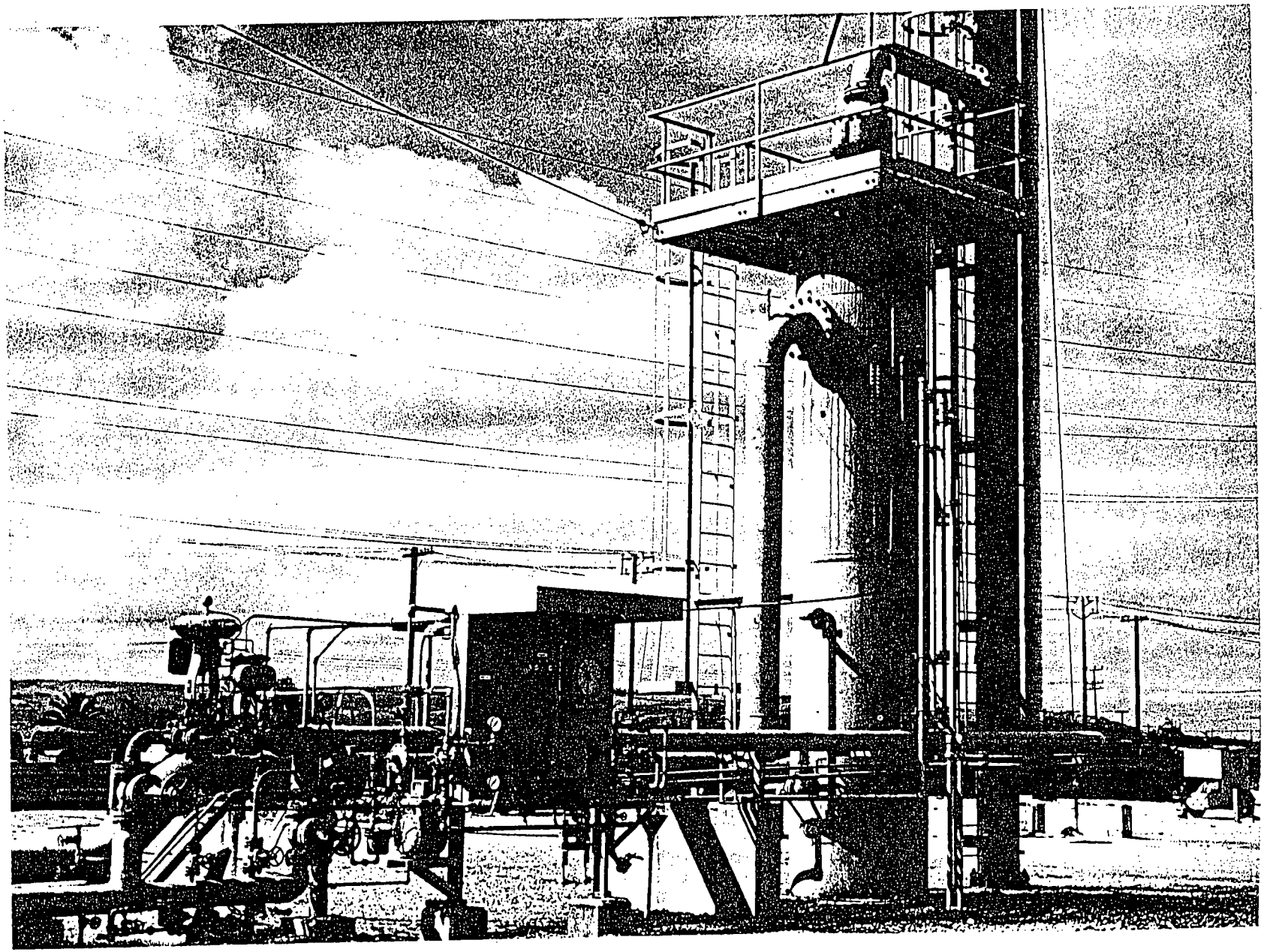

STYRENE PLANT FLARE CONTROL SYSTEM

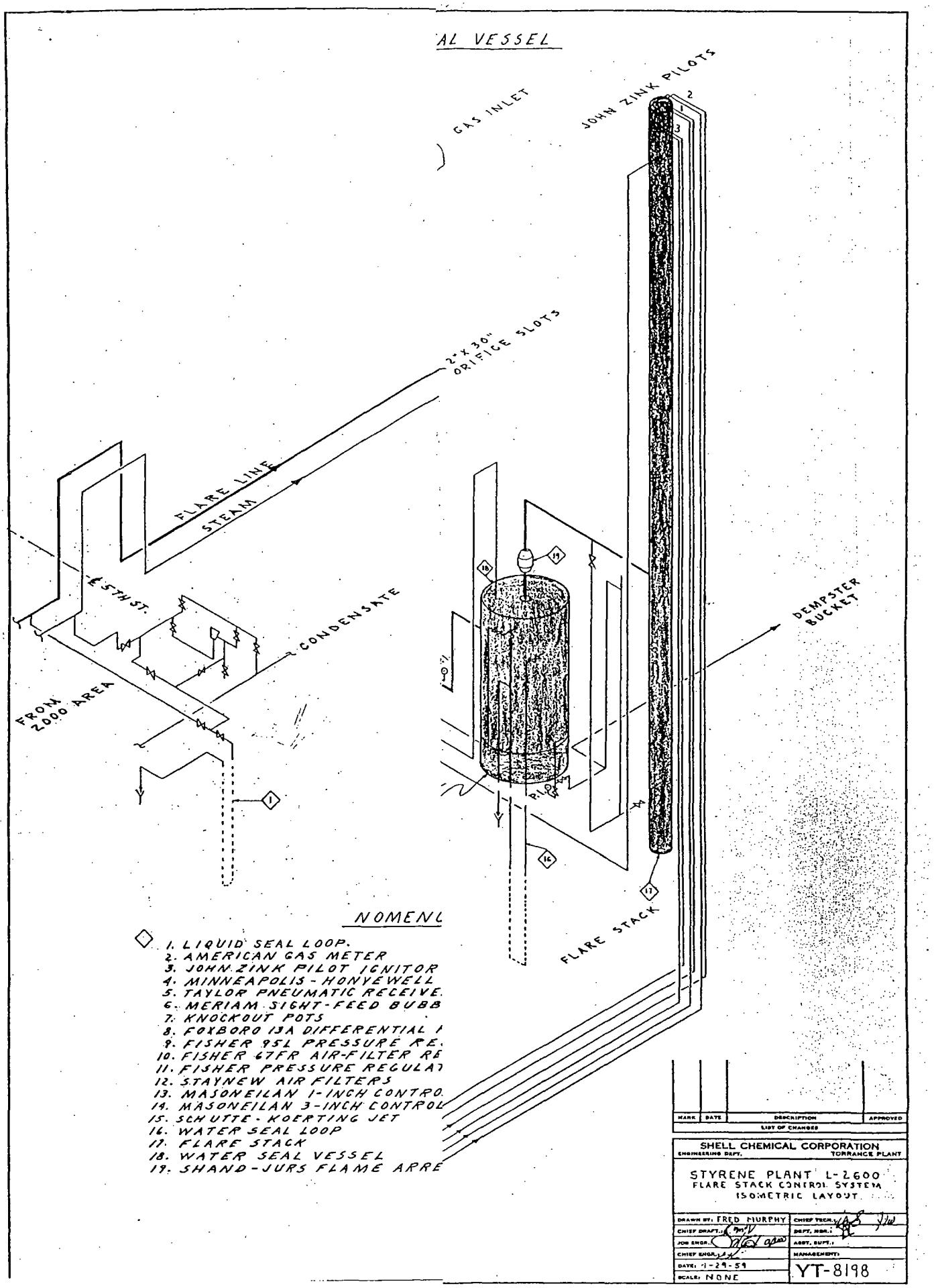
AL VESSEL
GAS INLET
JOHN ZINK PILOTS
2" X 30" ORIFICE SLOTS
FLARE LINE
STEAM
4TH ST.
CONDENSATE
FROM 2000 AREA
DEMPSTER BUCKET
FLARE STACK
NOMENCL
1. LIQUID SEAL LOOP.
2. AMERICAN GAS METER
3. JOHN ZINK PILOT IGNITOR
4. MINNEAPOLIS - HONYEWELL
5. TAYLOR PNEUMATIC RECEIVE.
6. MERIAM SIGHT-FEED BUBB
7. KNOCKOUT POTS
8. FOXBORO 13A DIFFERENTIAL
9. FISHER 95L PRESSURE RE.
10. FISHER 67FR AIR-FILTER RE
11. FISHER PRESSURE REGULA
12. STAYNEW AIR FILTERS
13. MASONEILAN 1-INCH CONTRO.
14. MASONEILAN 3-INCH CONTROL
15. SCHUTTE - KOERTING JET
16. WATER SEAL LOOP
17. FLARE STACK
18. WATER SEAL VESSEL
19. SHAND-JURS FLAME ARRE
MARK
DATE
DESCRIPTION
APPROVED
LIST OF CHANGES
SHELL CHEMICAL CORPORATION
ENGINEERING DEPT.
TORRANCE PLANT
STYRENE PLANT L-2600
FLARE STACK CONTROL SYSTEM
ISOMETRIC LAYOUT
DRAWN BY: FRED MURPHY
CHIEF DRAFT.
JOB ENGR.
CHIEF ENGR.
DATE: 1-29-59
SCALE: NONE
CHIEF TECH.
DEPT. MGR.
ASST. SUPT.
MANAGEMENT
YT-8198

APPENDIX

Steam-Gas Ratio

A published report by Smolen [4] describes the Esso-type flare tip and indicates that for a gas of given unsaturation the ratio of pounds of steam per pound of gas to achieve a chosen flame characteristic is constant for all flaring rates. The type of flame can be modified from a heavy smoke to one invisible by daylight by varying the steam-gas ratio.

For the ethylene plant flare installation the desired type of flame covered the range from orange with no smoke to light yellow. This objective was possible to achieve even though the steam-gas ratio was allowed to vary through a fairly wide range. The nature of the control problem is illustrated in Figure 4. In this diagram it is assumed that a satisfactory flame can be produced if the ratio is maintained within the range of 1.0-1.5 pounds of steam per pound of combustible gas.

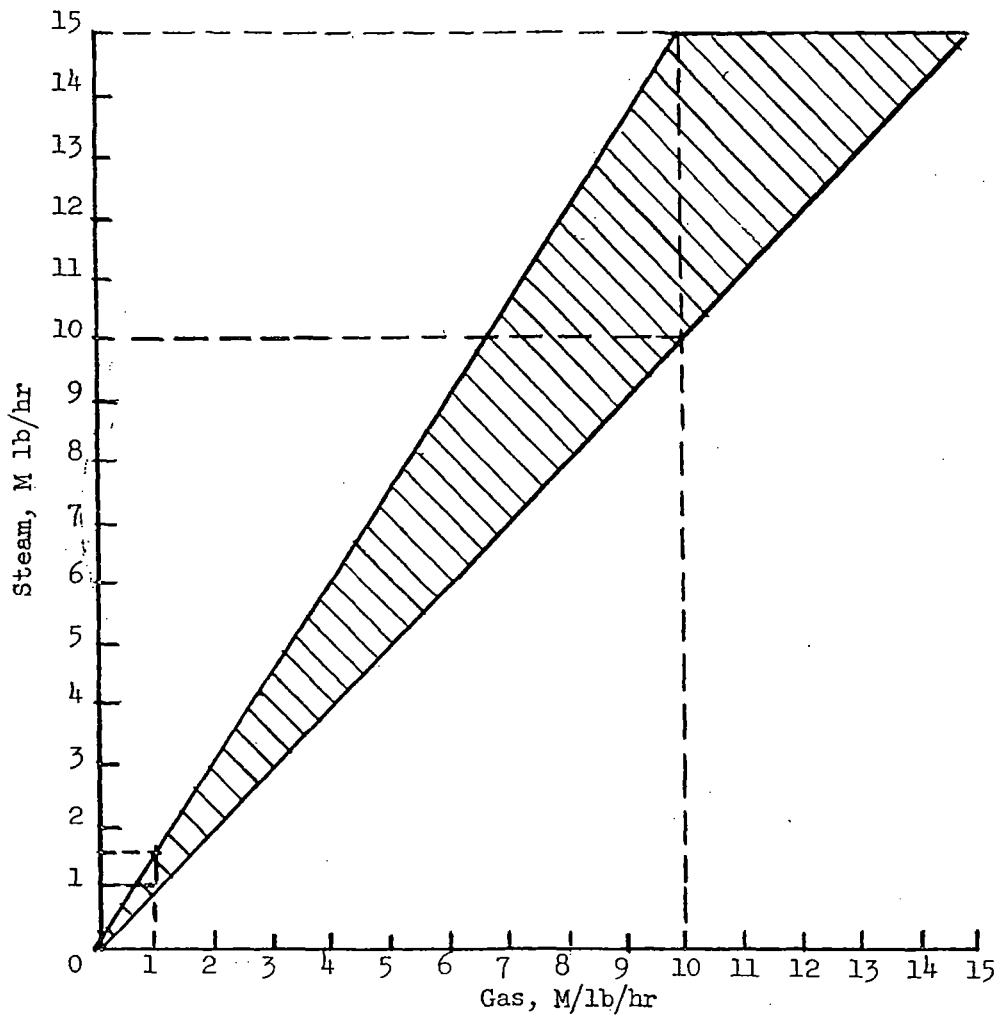

FIGURE 4

(4) Smolen, W. H., "Smokeless Flare Stacks", Petroleum Processing, September 1951, pp 978-982.

Assuming a motor valve having a capacity of 15 M lb/hr will be used to control the quantity of steam injected into the flare, and a burning rate of 10 M lb/hr of gas, a satisfactory flame will be produced as long as the steam injection rate is maintained in the range from 10 to 15 M lb/hr. Since the control range covers one-third of the motor valve capacity, control at this level will be easy. However, at a flaring rate of 1 M lb/hr of gas, steam injection must be held in the range 1.0 to 1.5 M lb/hr. The 500 lb/hr permissible variation in steam rate represents only one-thirtieth of the motor valve capacity; therefore more precise control will be required. At low flaring rates such as 200 lb/hr of gas, steam control will be unsatisfactory. For this reason, a 1-inch motor valve is used at our installation in parallel with a 3-inch motor valve to achieve good control throughout the flaring range. When steam demand exceeds the capacity of the 1-inch motor valve, the 3-inch valve takes over. Adequate control in the low range is important because smoking was encountered from too much steam as well as too little.

Gas Measurement Problem

In order to maintain the desired steam-gas ratio throughout the flaring range, it is necessary to measure the gas flow rate to generate a signal which can be used to actuate the motor valves. Conventional methods of flow measurement, such as the Pitot tube and orifice, depend on generating a differential pressure proportional to the square of the flow rate. For the Pitot tube the differential was too low in magnitude to be useful except at high gas rates. An orifice capable of generating a useful differential at low rates would result in an intolerable back pressure at higher rates. Conversely, an orifice large enough to reduce the back pressure to an acceptable level would be useless in the low range. What was needed was a variable orifice, with a small opening for low flows, and a large opening for high flows. An orifice consisting of a slotted pipe, immersed in water, with gas flowing down the pipe, through the slots, and bubbling up through the water appeared to possess the desired characteristics. Various shapes of slots were considered but to simplify construction and insure a good differential pressure response at low flaring rates as well as at high ones, rectangular slots were chosen. The final design of the slotted pipe is described in the main portion of this report and shown on drawing YT-8198.

Variable Orifice Calculation

The following table of nomenclature defines the symbols which will be used in the subsequent equations:

A = Cross sectional area of orifice in square feet
Cd = Orifice discharge coefficient
g = Acceleration of gravity = 32.2 feet per second per second
h = Head in feet of flowing fluid (gas)
H = Head in feet of water in dip pipe
Hm = Differential pressure in feet of water between high and low pressure taps of variable orifice
K = A constant
N = Number of slots in dip pipe

q = Rate of flow of gas in cubic feet per second
v = Velocity in feet per second
W = Width of single slot in feet
X = Differential pressure across orifice in feet of water
Pg = Weight density of gas in pounds per cubic foot
Pl = Weight density of water in pounds per cubic foot

For a frictionless, incompressible fluid, flow through an orifice is described by the equation,

$$v = (2\ gh)^{1/2} \qquad (1)$$

The rate of flow q may be obtained by multiplying both sides of equation (1) by the area A of the orifice.

Equation (1) may then be rewritten

$$q = A\ (2\ gh)^{1/2} \qquad (2)$$

For the variable orifice diagrammed in Figure 5, the differential pressure X varies from zero at the water level inside the dip pipe to H at the top of the slot. The variable orifice may be compared to a rectangular weir used for water flow measurement where X is at maximum at the bottom lip of the weir, and decreases to zero at the surface. For the variable orifice, the situation is reversed in that the discharge goes up instead of down.

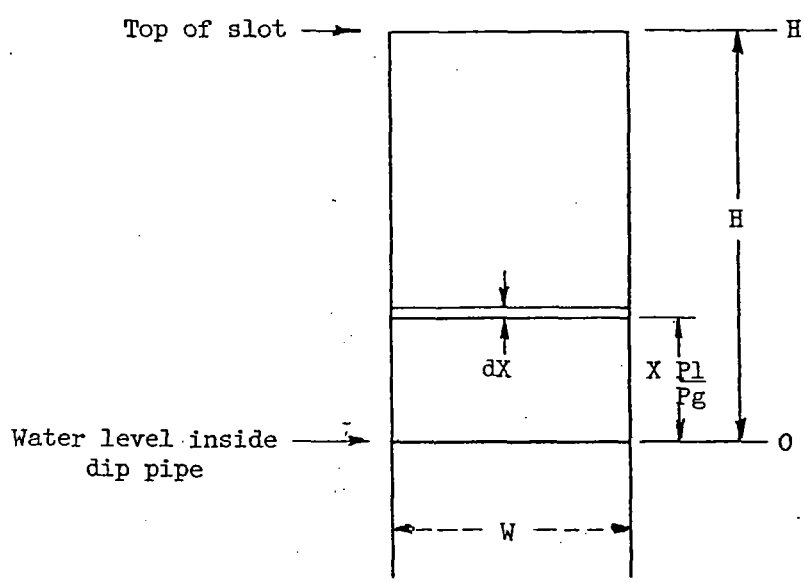

FIGURE 5

In equation (2) the differential pressure h refers to feet of flowing fluid, or gas. The actual measurement, however, is in feet of water, which must be converted to equivalent feet of gas. In the expression of X (Pl/Pg), Pl equals pounds of water per cubic foot, and Pg is pounds of the flowing gas per cubic foot. The differential pressure X across an incremental orifice area W dx, now becomes h Pg/Pl. Consequently, h = X(Pl/Pg). The incremental discharge (dq) through the elemental strip W dx can now be expressed by rewriting equation (2) in differential form:

$$dq = (2\ g\ X\ Pl/Pg)^{1/2}\ W\ dx \qquad (3)$$

Expressing equation (3) in integral form, and imposing the limits 0 to H,

$$dq = W\ (2g\ Pl/Pg)^{1/2} \int_0^H X^{1/2}\ dx$$

After integrating,

$$q = 2/3\ W\ (2\ g\ Pl/Pg)^{1/2}\ H\ 3/2 \qquad (4)$$

Equation (4) is the basic form for flow through a variable orifice, but thus far no provision has been made for friction losses or other modifying factors. Friction loss across the orifice can be accounted for in the conventional manner through use of coefficient of discharge Cd.

One modifying factor usually encountered, but for which no effect was found is velocity of approach. This may have been due to the orifice discharging directly into water, thus dissipating the velocity head. Another modifying factor, expansion of a gas flowing through an orifice was considered, but calculations indicated the effect would be less than 2% and could be ignored. Differential pressure losses caused by line drop, resistance from fittings, and dissipation of velocity head were encountered. Such losses are proportional to the square of the flow. These losses, plus head loss H across the orifice constitute the total differential pressure Hm between the high and low pressure taps. Consequently, the relationship

$$H = Hm - Kq^2 \qquad (5)$$

where K is a constant, provides the type of correction needed.

Substituting for H in equation (4), letting N represent the number of variable orifices in the dip pipe, and introducing a discharge coefficient Cd,

$$q = 2/3\ NW\ Cd\ (2g\ Pl/Pg)^{1/2}\ (Hm - K\ q^2)^{3/2} \qquad (6)$$

Equation (6) may be used for a first approximation in a variable orifice design by substituting the maximum desired values for q and Hm. First, estimate the velocity head, and line losses. Add the two, and then substitute in place of $K\ q^2$. Assume Cd = 0.66. For Pg substitute the weight in pounds for one cubic foot of the flowing gas, and for Pl,

the weight per cubic foot of water. For N substitute the number of slots desired for the dip pipe. Solve for W. This approximation for the width of the slot should be sufficiently accurate for design purposes. Optimum instrument adjustments for the completed installation, future maintenance, and flare performance studies, however, may be facilitated by determined, rather than assumed values for Cd and K.

Determination of Cd and K

Calibration of the Torrance Plant flare was accomplished by venting gas at known rates to obtain differential pressure readings at various points from low to high on the recorder scale. These readings were used in the calculation.

The gas vented was thermally cracked propane, saturated with water vapor, with a molecular weight of 25.5, specific gravity 0.88, and weighed 0.067 pounds per cubic foot.

The flow and differential pressure data are presented in Table I.

TABLE I

Observed		Calculated	
Inches Differential	Flow, CFH	Inches Differential	Flow, CFH
3.2	18,100	3.2	17,900
6.8	56,500	7.1	53,000
11.4	109,900	11.7	105,800
16.0	160,600	16.1	159,700
18.7	189,000	18.6	190,400

By using the observed 3.2 and 6.8 inches differentials, the corresponding flow rates, and assuming K = 0, equation (6) was solved for Cd. The average of the two Cd was 0.66. Equation (6) was then solved for K, using Cd = 0.66, 16.0 and 18.7 inches differential, and the corresponding observed flow rates. The average value for K was found to be 0.00010.

A comparison was then made to determine whether or not a reasonable agreement existed between the observed data and numbers calculated by equation (6) using the values for Cd and K derived in the manner described above. The results are shown in columns 3 and 4 of Table I.

The observed flow rates were used, and equation (6) solved for differential pressure to obtain the numbers reported in column 3. Similarly the observed differential pressures were used to derive column 4. Since the agreement between the calculated and observed data was satisfactory it was concluded that

$$q = 2/3\ HW\ 0.66\ (2\ g\ Pl/Pg)^{1/2}\ (Hm - 0.00010\ q^2)^{3/2} \qquad (7)$$

is a valid equation for the vapor flow through a variable rectangular orifice submerged in water for the Torrance Plant installation.

SHELL CHEMICAL CORPORATION
TORRANCE PLANT

DEVELOPMENT REPORT
SEPTEMBER, 1959

INVESTIGATION NO: T-MISC-4 POLYSTYRENE

REPORT NO: 1

SUBJECT: DEVELOPMENT OF SUPER IMPACT ABS PLASTICS

REPORTED BY: R. O. WHITEHEAD

REVIEWED BY: E. M. LANDO, M. L. SAGENKAHN

PARTICIPANTS IN WORK: R. O. WHITEHEAD

SUMMARY

A successful polymerization recipe was developed on a laboratory scale for the manufacture of a super-impact resistant acrylonitrile, butadiene, styrene (ABS) plastic. The physical properties of this laboratory developed plastic are comparable to those of similar, commercially available, ABS resins. This process employs two sequential stages of emulsion polymerization. In the first stage a cross-linked polybutadiene latex is formed with a modifier-free "peroxamine" polymerization system at 50°C. The second stage consists of adding the necessary amounts of acrylonitrile and styrene together with an emulsifier-catalyst (persulfate) solution to the first stage polybutadiene latex and polymerizing the mixture to 100% monomer conversion at 50°C. The plastic is then recovered from the latex by coagulation with either hot IPA or hot 1% aqueous $CaCl_2$ solution. The temperatures of the finishing system must be maintained above the glass temperature of the plastic if excessive fines are to be avoided. This process is similar to a process described in U.S. Patent 2,820,773 assigned to U. S. Rubber, but is outside of the limiting claims of that patent as judged by the Shell Development Company, Patent Division[1].

INTRODUCTION

In January of 1958 the Market Development Department issued a report summarizing the market aspects of ABS super-impact resistant polymers[2]. The conclusion was reached that ABS plastics would be a worthwhile addition to a line of polystyrene resins. Shortly thereafter the Torrance Plant Laboratory was assigned to develop a super-impact ABS plastic[3]. The preferred technique was that of a simple "one-kettle" process which could be readily adapted to existing equipment or that would minimize capital outlay in the event of new equipment construction. The Torrance Research Laboratory agreed to provide the necessary physical testing and analytical procedures.

A detailed analysis of Marbon Chemical Company's Cycolac resin, a commercially available ABS plastic, was provided by the Shell Development Company[4].

THEORY

The conditions that lead to an increase in impact strength of rubber and resin blends are discussed by Merz, Claver and Baer[5]. The basic assumption is that the rubber exists as a separate, particulate phase dispersed in plastic. With this type of rubber-in-plastic system the conditions that lead to an increase in impact resistance are as follows (Figure I):

1. Increasing the rubber-resin interface adhesion should increase the impact strength until a maximum is reached.

2. With the above condition satisfied i.e., maximum interfacial adhesion, the dispersed rubber phase having the greatest tensile energy absorption to failure should impart the highest impact strength to the rubber-plastic mixture.

3. Increasing the rubber phase concentration should increase the impact strength of the mixture. This is illustrated in Figure III by Torrance Research Laboratory analyses of various grades of Marbon Chemical Company's Cycolac resins.

4. Decreasing the rubber particle size while holding the rubber concentration constant should increase the impact strength. The reason advanced is that a larger number of rubber particles are acting to hold the fracture surfaces together.

5. The rubber phase must have the ability to respond to the applied stress, that is the system must be above the glass temperature of the rubber phase.

The basic problem in making super-impact ABS plastics is increasing the compatibility or phase boundary stability of the rubber in resin system. Direct blending of rubber in resin without resorting to some means of interface adhesion results in a plastic with an impact strength which is less than that of the resin phase alone. The literature mentions several methods of increasing this interface adhesion. These are as follows:

1. The use of grafts of the resin monomers onto the rubber[6]. This is considered analogous to the usual "surfactant" effect.

2. The presence of a common comonomer in each polymer phase[5] employing the principle of compatibility of similar materials.

Of these two methods the grafting method allows polymeric mixtures to be made with low temperature impact resistance. Having a resin monomer copolymerized with the rubber will raise the glass temperature of the rubber restricting the low temperature applications of polymeric mixtures of this type.

PROCEDURE

Equipment

Conventional laboratory and pilot plant emulsion polymerization equipment was used throughout this investigation. The main investigative effort was made employing one-half-gallon Sutherland reactors as the amount of product recovered from this reactor size was convenient for subsequent testing. Larger scale reactors of the five and twenty-gallon size were occasionally employed when larger quantities of plastic were desired for extrusion and injection molding.

Chemicals

The reagents and chemicals employed in this work, other than acrylonitrile, were taken from Torrance Plant SBR polymerization supplies. The monomers used in this investigation are described as follows:

1. Butadiene - Torrance Plant Finished, 98.0%w min.

2. Styrene - Torrance Plant Polymer Grade, 99.6%w min.

3. Acrylonitrile, Monomer-Polymer Corporation, 99.5%w

Recipes

The polymerization recipes used were primarily adaptations of conventional, hot (50°C), SBR type recipes employing 5 phm sodium fatty acid soap chips (NaFS) as emulsifier, and either potassium persulfate or "peroxamine" as initiators. Exceptions to the above soap concentrations are noted in the Tables. Ca 200 ph (plastic) water was used in the recipes, yielding latexes with 30-33%w solids contents.

Technique (Polymerization)

Solution makeup and reactor charging were performed in conventional manner. Monomer conversion was followed by the conventional "pan-solids" technique. With the extremely fast "peroxamine"-butadiene polymerization system (3-4 hrs) it was frequently convenient to follow the course of the reaction through observation of the pressure drop as the reaction progressed to completion.

Technique (Finishing)

The resultant plastic latexes were coagulated conventionally in hot isopropyl alcohol or hot 1% aqueous calcium chloride solution. The precipitated plastic was recovered by decanting and filtering and then dried overnight in a forced air oven at 150°F.

Testing

The impact strength tests determine the relative susceptability of the plastics to fracture by shock. The impact test used in this investigation was the Izod test[7] in which the specimen is held as a cantilever beam and is broken by a blow delivered at a fixed distance from the edge of the specimen clamp. The test requires a notched specimen. The function of the notch is to produce a standard degree and location of stress concentration.

Prior to testing, the dry polymers were milled ten minutes at a temperature of 160-190°C. The samples were compression molded, equilibrated at constant temperature and humidity, and then tested at the Torrance Research Laboratory for impact resistance and hardness (Rockwell M).

Extruded and injection molded samples were tested for impact resistance, hardness, heat distortion temperature, relative flowability, and tensile properties.

RESULTS

Two-Stage Graft Polymerization Method

The two-stage graft polymerization process described below was the most satisfactory process found that yielded super-impact resistant ABS plastics. This process utilizes the "peroxamine" initiator system to form a cross-linked polybutadiene latex to which is added acrylonitrile, styrene, and a NaFS-potassium persulfate soap-catalyst solution. The mixture is polymerized to 100% conversion forming, (1) a graft of resin on polybutadiene, and (2) copolymerized resin of acrylonitrile and styrene. The recommended recipe for this polymerization process is given in Table I.

The physical properties of the plastic formed by this process compare favorably with commercially available ABS plastics of similar composition and impact strength. A comparison of the properties of these plastics is shown in Table II.

This process is similar to a process developed and patented by U. S. Rubber[8]. The patent covering the U. S. Rubber process specifically limits the amount of alkali-metal soap to less than five parts per hundred parts of polybutadiene formed. Attempts to make super-impact plastics by the U. S. Rubber process were successful in that high impact strengths were achieved but the operation was characterized by two severe problems.

These problems are as follows: (1) very slow butadiene polymerization reaction rates were obtained, and (2) the plastic would precipitate in the reactor during the second stage polymerization due to insufficient latex stabilization imposed by the soap restriction.

To surmount these obstacles a hot (50°C) "activated" recipe was chosen as a substitute for the persulfate-n-dodecyl mercaptan system employed for the polymerization of butadiene in the U. S. Rubber method. The "peroxamine" recipe was chosen for (1) its relatively simple nature as compared to other "activated" recipes, and (2) its low iron content which should contribute to the formation of light colored plastic. By the use of this recipe it was possible to achieve (1) increased butadiene polymerization rate, and (2) polymerization of butadiene without the use of n-dodecyl mercaptan which is suspected of inhibiting graft polymerization[9]. Furthermore, the increased butadiene polymerization reaction rate resulted in a larger number of smaller polybutadiene particles than that of the persulfate system, which increased the total particle surface. Therefore using this system it was possible to make super-impact resistant ABS plastics which were nearly independent of the alkali-metal soap concentration. See Table III and Figure II.

Other Methods

Graft-Resin Latex Blends

Partial success in achieving super-impact resistant ABS plastics was accomplished by blending latexes of acrylonitrile-styrene resins with latexes containing acrylonitrile and styrene grafted onto polybutadiene. See Table IV. The grafts used in these experiments were made from polybutadiene polymerized with the potassium persulfate-n-dodecyl mercaptan system. The possible inhibiting effects of the n-dodecyl mercaptan on the grafting reaction may explain the lack of complete success with this method[9]. While no experiments with the "peroxamine" polybutadiene polymerization system were made in this manner, it is believed that this method might prove an important adjunct to the recommended two-stage polymerization process in the manufacture of a number of grades of super-impact ABS resins to cover any desired degree of impact strength.

Rubber-Resin Latex Blend Method

The coagulation product of latex blends of acrylonitrile-butadiene rubbers and acrylonitrile-styrene resins resulted in several polymeric mixtures with super-impact resistance. See Table V. The disadvantages of this method are as follows: (1) the process is comprehensively patented[10], (2) the plastics from this method probably have poor low temperature impact resistance as the inclusion of acrylonitrile in the rubber phase would increase the glass temperature of this phase, and (3) it is a complex system with a large number of rubber-resin combinations yet to be explored.

Graft-Rubber-Resin Latex Triblends

A method of making super-impact ABS plastics by blending graft, rubber, and resin latexes is claimed and patented by Firestone[9]. This process involves making (1) a graft of acrylonitrile and styrene on polybutadiene, or

similar rubber, (2) an acrylonitrile-styrene resin, and (3) a polybutadiene type rubber. These are made by conventional methods. The three latexes are blended in the proper proportions and the mixtures coagulated. Attempts to duplicate this process were only partially successful as only one plastic in five exhibited super-impact strength as shown in Table VI. Further exploratory and development work is needed before this process could be recommended as commercially feasible.

True ABS Terpolymers

True ABS terpolymers, that is the terpolymerization product of the ABS monomers have impact resistance below that necessary to be considered in the super-impact range. See Table VII.

Programmed Butadiene Addition

Programming the addition of butadiene to the latter part of the polymerization reaction of acrylonitrile and styrene failed to appreciably increase the impact strength of the resultant plastic. See Table VIII.

CONCLUSIONS

The two-stage graft polymerization system is recommended as the most practical route to super impact resistant ABS plastics. This system is characterized by relative simplicity, it approaches the ideal "one-kettle" process and it is a consistent process both from process and product considerations. The system should be quite versatile and insensitive to minor recipe ingredient changes. The remaining problems are of a product quality nature and are described in the following FUTURE WORK section.

FUTURE WORK

The problems remaining to be solved prior to commercial production of ABS plastics by the two-stage polymerization process described in this report can be summarized as follows:

1. A technique for producing a variety of grades (impact strengths) of ABS plastics is required. This presumably can be accomplished by varying the polybutadiene content. See Figure III.

2. The color of these plastics has varied from light cream to brown. The coagulating medium has some effect on the color as shown in Table IX. Also, heat and/or pressure involved in extrusion and injection molding has affected the color of molded specimens. The importance of color in these polymers together with the causes should be more extensively investigated.

3. Other finishing methods such as drum drying should also be investigated as the coagulation-forced air drying method used in this investigation may not be the best process for recovery of this type of polymer.

Written by R. O. Whitehead
R. O. Whitehead

Reviewed by E. M. Lando
E. M. Lando

M. L. Sagenkahn
M. L. Sagenkahn

ROW:bs
8-27-59

Attachments

GLOSSARY

The following convenient abbreviations were used in this report:

A	=	Acrylonitrile
B	=	Butadiene
S	=	Styrene
ABS	=	Acrylonitrile, Butadiene, Styrene
A/B/S	=	Weight Ratio of Acrylonitrile, Butadiene and Styrene
A/S→B	=	Weight Ratio of a Graft Polymerization of Acrylonitrile and Styrene on Polybutadiene
NaFS	=	Sodium Fatty Acid Soap Chips or Flakes
Perox	=	"Peroxamine" Butadiene Polymerization Initiation System
Pers.	=	Potassium Persulfate Butadiene Polymerization Initiation System

BIBLIOGRAPHY

1 Bakalar, A. B., (Shell Development Company, Patent Division) Letter to M. Voogd, (Torrance Plant Manager) October 20, 1958. Defines the areas of noninfringement of U. S. Patent 2,820,773.

2 Yabroff, D. L. (Market Development Department, Head Office), "Acrylonitrile/Butadiene/Styrene Polymers", January 2, 1958.

3 Minnich, J. R., Memorandum of Discussion, "Cycolac Project at Torrance Plant", January 21, 1958.

4 Condo, F., (Shell Development Company) Letter to Heiligmann, R. G. (Batelle Memorial Institute), February 15, 1956, Attachment, "Composition of Marbon Cycolac".

5 Merz, E. H., Claver, G. C., and Baer, M., J. Poly. Sci., 22, 325 (1956).

6 Lundstedt, O. W., Bevilacqua, E. M., J. Poly. Sci., 24, 297 (1957).

7 "ASTM D-256".

8 Childer, C. W., Boro, T., and Fisk, C. F. (to U. S. Rubber Company) U. S. Patent 2,820,773 (1958).

9 Hayes, R. A., (to Firestone Tire and Rubber Company) U. S. Patent 2,820,808 (1957).

10 Daly, L. E., (to U. S. Rubber Company), U. S. Patent 2,677,674 (1953), 2,698,313 (1954), 2,439,202 (1948), 2,505,349 (1950), 2,541,748 (1951), and 2,550,139 (1951).

TABLE I

RECOMMENDED POLYMERIZATION RECIPE FOR SUPER IMPACT ABS PLASTICS

First Stage Polymerization

Material	Parts
Butadiene	30.0
Para-Menthane Hydroperoxide	0.045
Water	99.0
Sodium Fatty Acid Soap	0.9
Potassium Chloride	0.09
Ferrous Sulfate Heptahydrate	0.0003
Diethylenetriamine	0.0375

Temperature °C, 50

Reaction Time to 95+ %w Conversion, 4 hrs

Second Stage Polymerization

Material	
Polybutadiene Latex[1]	130.0
Styrene	50.0
Acrylonitrile	20.0
Sulfole	0.3
Water	100.0
Potassium Persulfate	0.2
Sodium Fatty Acid Soap	2.0

Temperature °C, 50

Reaction Time to 95+ %w Conversion, 4 hrs

[1]Polybutadiene latex formed in first stage polymerization already present in reactor. Other materials are added to the reactor containing this latex.

TABLE II

PHYSICAL PROPERTIES OF ABS PLASTICS

Plastic	ABS-1[1]	ABS-1A	Cycolac H[2]	Kralastic J[3]
Properties				
Hardness, Rockwell	-32M	-36M	80-90R	62R
Izod Notched Impact, ft-lbs/in				
Gate (1/4" bar)	7.0	6.6	-	-
Dead (1/4" bar)	5.9	6.6	-	-
Sample Molding Method Unknown	-	-	5-7	6-7
Elongation, %	69	72	40-50	-
Yield Point, psi	4300	4750	-	-
Ultimate Tensile, psi	4250	4450	5000	3000
Heat Distortion Temperature, °F	187	185	185	172
Spiral Flow, inches	11.7	11.4	-	-

1 ABS-1 was made in a Torrance Research 20-gallon reactor according to the recommended recipe. ABS ratio used was 20/30/50. ABS-1A is ABS-1 with 2%w n-butyl stearate plasticizer included.

2 Values from Marbon Chemical Company Cycolac specification brochure.

3 Values from U. S. Rubber brochure, "Kralastic Molding Compounds", p. 14.

TABLE III

COMPARISON OF ABS PLASTICS MADE BY TWO STAGE POLYMERIZATION[1]

Concentration of NaFS					
Initial ph B	Total ph B	Total ph (plastic)	First Stage Initiation	Impact[2] Strength	Hardness Rockwell M
3.0	3.0	0.9	Perox.	6.8	-64
7.5	7.5	2.25	Perox.	7.0	-62
3.0	9.7	2.9[3]	Perox.	6.7	-53
15.0	15.0	4.5	Perox.	4.9	-50
15.0	15.0	4.5	Perox.	6.6	-48
3.0	16.3	4.9[4]	Perox.	5.4	-62
25.0	25.0	7.5[4]	Perox.	5.3	-64
1	1	0.3[4]	Pers.[5]	6.0[6]	-75
4	4	1.2	Pers.[5]	11.3[7]	-74
2	2	0.6[8]	Pers.[5]	9.6[7]	-66
7.5	23.5	5.9[4]	Pers.	1.2[9]	-96
7.5	7.5	2.25	Pers.	0.24	67

1 A/B/S ratio of all runs in this table is 20/30/50 unless otherwise indicated.

2 Izod notched impact, ft-lbs per in.

3 Two ph (plastic) of NaFS added at the beginning of the second stage polymerization.

4 Four ph (plastic) of NaFS added at the beginning of the second stage polymerization.

5 These experiments based on Patent U. S. 2,820,773 assigned to U. S. Rubber. All of these plastics precipitated during second stage reaction. Monomer conversion was unknown but probably varied.

6 A/B/S ratio, 24.3/33.5/42.2.

7 A/B/S ratio, 25/30/45.

8 Five ph (plastic) of Nopco 1525 stabilizer detergent was added at beginning of second polymerization.

9 A/B/S ratio, 15/25/60.

TABLE IV

PROPERTIES OF ABS GRAFT-RESIN BLENDS[1]

Graft Composition A/S → B Weight Ratio	Resin Composition A/S Weight Ratio	Izod Notched Impact, ft-lbs/in	Hardness Rockwell M
8.8/31.2 → 60.0	20/80	2.0	-96
12.0/28.0 → 60.0	30/70	5.8	-72
12.0/28.0 → 60.0	30/70	1.0	-37

[1] 50 Parts of graft to 50 Parts of resin in each case. The NaFS soap content of the graft substrate was 7.5 ph B. The resin contained 2 ph (resin) NaFS.

TABLE V

PROPERTIES OF ABS RUBBER-RESIN BLENDS

Rubber/Resin Weight Ratio	Rubber Composition A/B Weight Ratio	Resin Composition A/S Weight Ratio	Impact[1] Strength	Hardness Rockwell M
21/79	33/67	20/80	0.72	-26
37/63	33/67	20/80	3.83	-92[2]
37.5/62.5	33/67	20/80	5.00	-106[2]
37.5/62.5	33/67	20/80	8.02	-85[2]
37.5/62.5	33/67	20/80	7.09	-87[2]
30/70	0/100	28/72	0.28	-11

[1] Izod notched impact strength, ft-lbs/in.

[2] Insufficient milling of these samples resulted in poor sample specimen cohesiveness and homogeniety. These are probably the reasons for the extremely low hardness values.

TABLE VI

PROPERTIES OF ABS PLASTICS MADE FROM LATEX TRIBLENDS[1]

Graft/Rubber/Resin Weight Ratio	Impact Strength Izod Notched, ft-lbs/in	Hardness Rockwell M
5/15/80[2]	4.41	83
15/15/70[2]	0.74	49
15/10/75[3]	0.68	65
15/10/75[2]	0.54	23
15/10/75[4]	0.24	49

[1] These plastics were made according to the method described in U. S. 2,802,808 to Firestone. The rubber and graft substrate NaFS soap content was 7.5 ph B while the resin contained 2.0 ph (resin) NaFS.

[2] a. Graft composition, A/S→B weight ratio, 8.8/31.2→60.
b. Resin composition, A/S weight ratio, 22/78.
c. Rubber composition, B/S weight ratio, 90/10.

[3] a. Graft composition, same as 2 a.
b. Resin composition, A/S weight ratio, 30/70.
c. Rubber, "peroxamine" activated polybutadiene.

[4] Graft and resin composition same as 2 a. and 2 b. Rubber phase was "peroxamine" polybutadiene.

TABLE VII

PROPERTIES OF ABS TRUE TERPOLYMERS

Monomer Weight Ratio, A/B/S	Izod Notched Impact, ft-lbs/in	Hardness Rockwell M
25/20/55[1]	0.60	15
20/10/70	0.56	15
20/20/60	0.50	17
20/10/70	0.43	15

[1] This composition approximates azeotropic terpolymer composition.

TABLE VIII

PROPERTIES OF PROGRAMMED BUTADIENE[1] ABS TERPOLYMERS

Monomer Weight Ratio, A/B/S	Izod Notched Impact, ft-lbs/in	Hardness Rockwell M
20/10/70	0.51	12
30/10/60	0.27	15
20/30/50	0.75	-69

[1] Butadiene was added to the reacting mixture between 70 and 100%w conversion of the monomers.

TABLE IX

COMPARISON OF COAGULATION METHOD ON PROPERTIES OF ABS PLASTIC MADE BY TWO-STAGE POLYMERIZATION

Property	Coagulation Method[1]	
	Hot Isopropyl Alcohol	Hot $CaCl_2$ (1%w aqueous solution)
Color	Cream	Light Brown
Impact Strength, Izod Notched ft-lbs/in	10.7, 7.2	10.2, 9.6
Hardness, Rockwell M	49	51

1 Two samples from a common latex source were coagulated by each method.

FIGURE I

REPRESENTATION OF RUBBER PARTICLES DISPERSED IN PLASTIC UNDER IMPACT TEST CONDITIONS

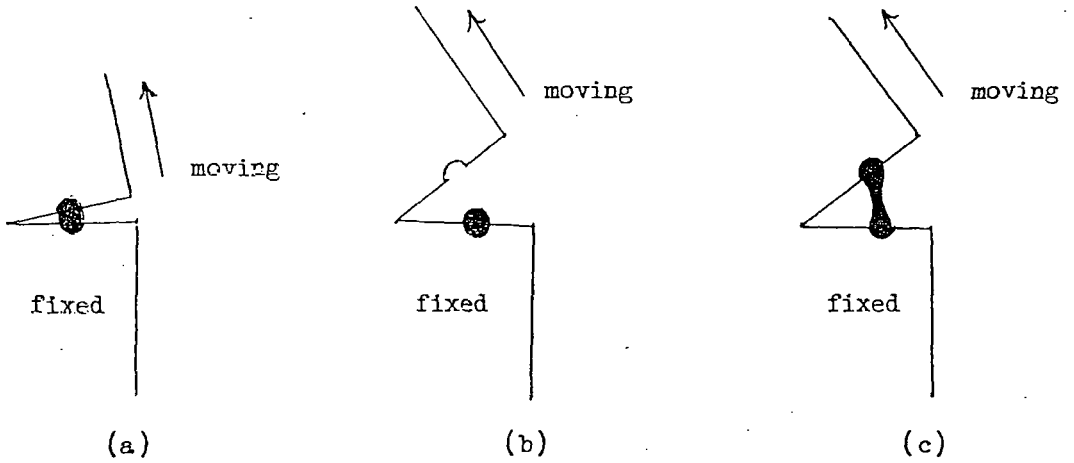

(a) Rubber particle acting to hold fracture surfaces together at beginning of impact.

(b) Rubber particle is abstracted from the fracture surface resulting from poor interface adhesion.

(c) Rubber particle rupturing from tensile stress when interface adhesion is not limiting.

FIGURE II

COMPARISON OF NaFS SOAP CONCENTRATION
VERSUS IMPACT STRENGTH OF ABS PLASTICS

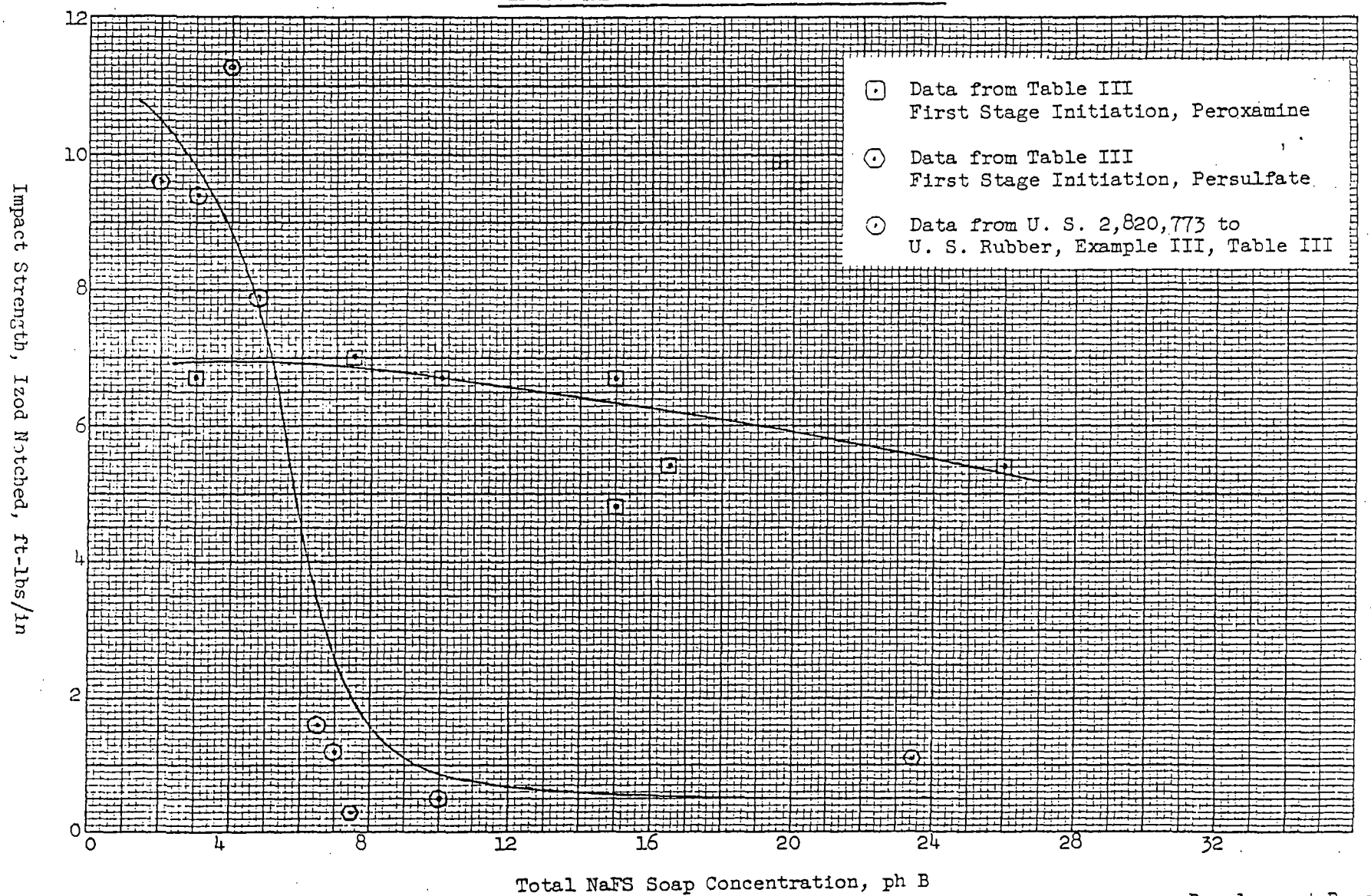

Development Report
ROW/da

FIGURE III

BUTADIENE CONTENT VS IMPACT STRENGTH
OF CYCOLAC* MOLDING RESINS

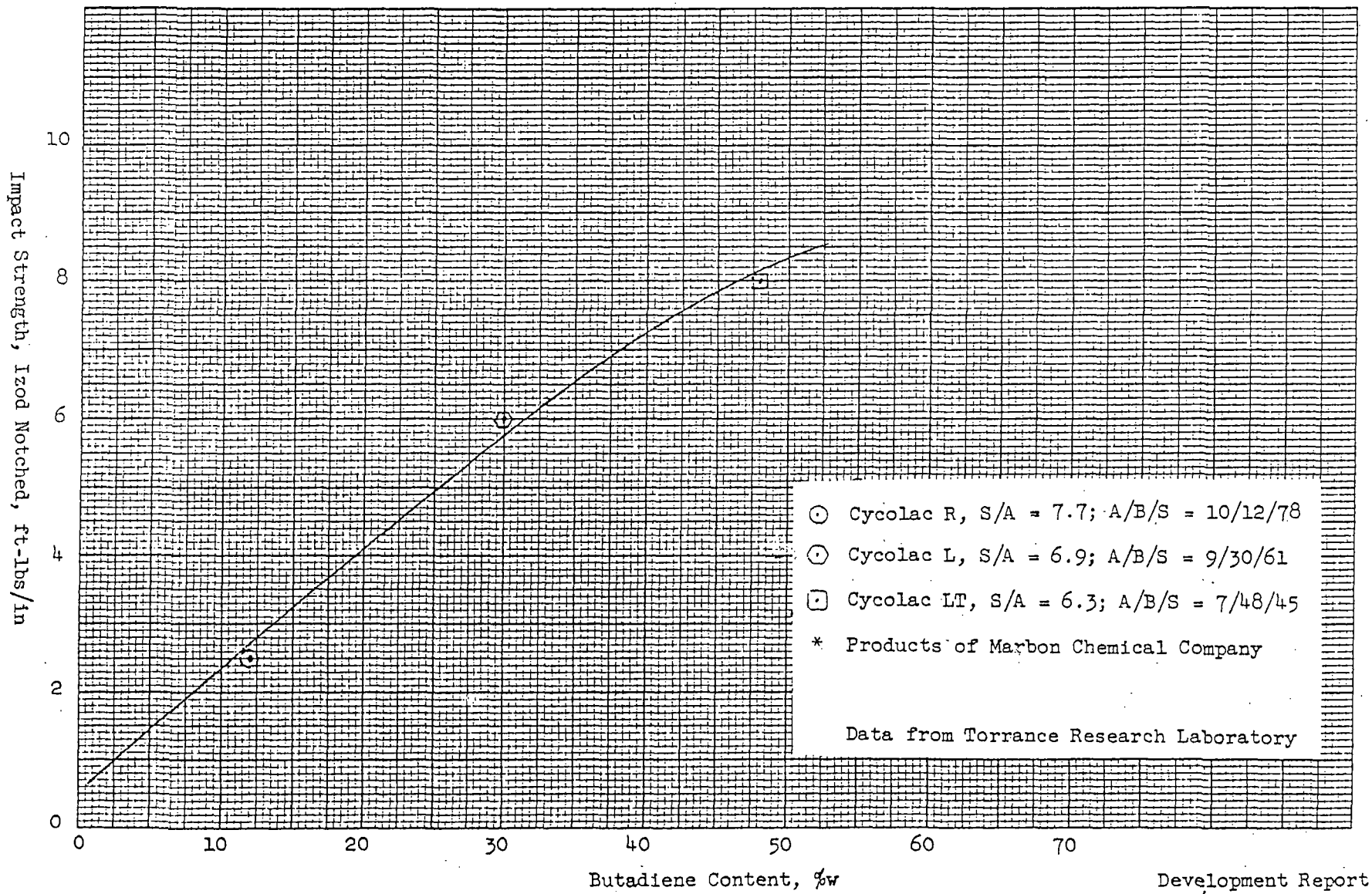

Development Report
ROW/da

JOHN A. LAMBIE
COUNTY ENGINEER

COUNTY OF LOS ANGELES
DEPARTMENT OF COUNTY ENGINEER
108 WEST SECOND STREET
LOS ANGELES 12, CALIFORNIA
MADISON 9-4747

HARVEY T. BRANDT
CHIEF DEPUTY
LLOYD B. KNOX
ASST. CHIEF DEPUTY
WILLIAM H. KRELLE
ASST. CHIEF DEPUTY

November 23, 1959

Honorable Board of Supervisors
County of Los Angeles
California

Gentlemen:

CERTIFICATION - RENEWAL OF BUSINESS LICENSE
SHELL CHEMICAL CORPORATION (I-903)
NOT OPEN TO THE PUBLIC
FOURTH SUPERVISORIAL DISTRICT

Enclosed is a copy of Business License Application No. 42004 as submitted to the County Tax Collector pursuant to provisions of Ordinance No. 5860 (Business License Ordinance) by the Shell Chemical Corporation for renewal of their business license to operate a solid fill disposal facility located at 19500 South Moneta Street, Torrance Area. The Regional Planning Commission has filed a written statement certifying that the continued dumping of solid fill material for which no charge is made, will not violate Ordinance No. 1494 the Zoning Ordinance.

The applicant has stated that the Shell Chemical Company is the sole owner of the premises and has furnished this office with the names and addresses of the directors of the corporation. These statements are on file in the office of the County Engineer

License retained in Plant Treasury

TORRANCE PLT.
DEC 21 1959
MGR.
SUPT.
RES.
ASST.
SUPT. S.O.
TY.
BUTA.
ASST.
SUPT. O.P.
POLY.
FIN.
SHNP.
TREAS.
ENGR.
P.&I.R.
LAB.
PURCH. STORES
TECH.
GEN. F.
PLS. HDL.
DATE ANS.
ANS. BY
FILE NO.

DEC 71 3 32 PM '59
RECEIVED

APPROVED BY
BOARD OF SUPERVISORS

DEC - 8 1959

Gordon T. Nesvig
Clerk of the Board

TORRANCE
SP-0013249

and may be reviewed any time upon request. This facility is operating under the control of Industrial Waste Permit No. 2093 issued by the County Engineer.

As a result of properly conducted disposal methods, a low existing area partly under water during certain portions of the year, will be filled and the resulting land may be put to beneficial use.

Pursuant to the provisions of Section 2231 of said Ordinance No. 5860, the County Engineer submits the following

CERTIFICATION:

a. The applicant is a corporation, and as such, is in the opinion of the County Engineer, a fit person to possess the required license.

b. This is a private disposal facility to be used only by the applicant, and therefore, no price list is required.

c. The applicant has stated that the waste disposal facility is not open to the public.

d. Since the facility is not open to the public, no sign is required.

e. Equipment for maintenance of this facility has been checked by the County Engineer and appears to comply with all applicable laws, ordinances, and regulations.

f. The Director of Planning of the Regional Planning Commission has filed a written statement with the County Engineer certifying that the proposed use will not violate provisions of Ordinance No. 1494 (Zoning Ordinance).

TORRANCE
SP-0013250

g. Representatives of the Office of the County Fire Warden, County Health Officer, and the State Water Pollution Control Board No. 4 have indicated that applicable ordinances or regulations can be met by the applicant, provided the operation is controlled in accordance with the conditions of the above mentioned Industrial Waste Permit.

h. Enforcement of the Business License Ordinance will be facilitated and the project will not menace or endanger the public health and safety provided the licensee conducts all operations pursuant to the conditions and limitations of his Industrial Waste Permit, and further, the applicant has filed Faithful Performance Bond No. 9670544 with your Board in the amount of $5,000 which obligates him to comply with all of the terms and conditions of any permit or license granted.

i. In the opinion of the County Engineer, the operation and maintenance of this disposal facility, pursuant to the conditions and limitations of the Industrial Waste Permit, will not be a menace to or endanger the public health, safety or general welfare.

j. The location is proper, provided the conditions and limitations of the operating permit, issued in accordance with the provisions of Ordinance No. 6130, are established as the minimum operating requirements.

k. The applicant has, under his control, in good mechanical condition, the necessary mechanical equipment and supplies to adequately conduct his business.

m. Since this is limited to a solid fill operation, it is recommended that the license provide that neither garbage nor market refuse may be deposited at this site.

TORRANCE
SP-0013251

The County Engineer

RECOMMENDS

That your Board:

1. Make the findings as required by Section 2234 of Ordinance No. 5860 which are as follows:

   a. That the applicant is a fit person to possess such license.

   b. That the location is proper.

   c. That the applicant owns or has under his control, in good mechanical condition, sufficient equipment and mechanical supplies to adequately conduct his business.

   d. That the equipment and facilities can conform with all applicable laws, ordinances and regulations.

   e. That the Director of Planning of the Regional Planning Commission has filed a written statement with the County Engineer certifying that the proposed use will not violate, in any way, Ordinance No. 1494, the Zoning Ordinance.

   f. That all applicable ordinances and regulations will be met by the applicant.

   g. That the proposed operations will not be a menace to or endanger the public health, safety, or general welfare.

   h. That the required bond has been filed.

2. Notify the applicant of your proposed action and advise the applicant that the Board will take such action, unless within five days after receipt of such notice, the applicant demands in writing a hearing as provided in Section 2233 of Ordinance No. 5860.

TORRANCE
SP-0013252

3. Advise the County Engineer of any special conditions or regulations which, in the opinion of the Board of Supervisors, should be included in the operating permit issued by the County Engineer.

4. Instruct the Tax Collector to issue the required Business License when Certification of the County Engineer, duly approved by the Clerk of the Board, has been filed with the Tax Collector, to be attached to and made a part of the Business License.

Yours respectfully,

Original Signed

John A. Lambie
COUNTY ENGINEER

JAL-CJF:dm

Enc.

cc: 14 Communications Section
5 Supervisors
1 CAO
1 County Counsel

TORRANCE
SP-0013253

POST THIS LICENSE IN A CONSPICUOUS PLACE

COUNTY LICENSE

No. 87753 C

COUNTY OF LOS ANGELES STATE OF CALIFORNIA

THE LICENSEE NAMED HEREON HAS PAID TO THE UNDERSIGNED TAX COLLECTOR THE AMOUNT SHOWN AND IS HEREBY LICENSED UNDER PROVISIONS OF ORDINANCE NO. 5860 FOR THE PERIOD EXPIRING ON THE DATE SHOWN TO CARRY ON THE BUSINESS OR OCCUPATION SPECIFIED AT THE LOCATION SHOWN (IN THE CASE OF A STATIONARY BUSINESS) OR TO OPERATE THE VEHICLE SPECIFIED. THIS LICENSE IS SUBJECT TO ANY SPECIAL CONDITIONS SHOWN AND IS VALID ONLY IN THE UNINCORPORATED TERRITORY OF LOS ANGELES COUNTY.

LICENSEE, LOCATION, BUSINESS, OCCUPATION, OR VEHICLE

DEC 18'59 DATE OF ISSUE

SHELL CHEMICAL CORP. DUMP, PRIVATE
P.O. BOX 211 A-42004
TORRANCE, CALIF. $125.00
19500 S. MONETA ST.

Dec 31'60 EXPIRATION DATE

LICENSE FEE

COUNTY TAX COLLECTOR
AND EX-OFFICIO COUNTY LICENSE COLLECTOR

SPECIAL CONDITIONS

PENALTY COLLECTED Subject to attached certification PLATE NO.

COUNTERSIGNED

COUNTY AUDITOR-CONTROLLER

76L325 4-57

THIS LICENSE IS NOT TRANSFERABLE

Yes original returned to License div. Tax Collector Office to be used as partial payment ($25) on new application

Gov

Gov Dale

TORRANCE
SP-0013248

SC 1003-1 (Rev. 9-57)—Printed in U.S.A.

REFERENCE

SHELL CHEMICAL CORPORATION

DATE DECEMBER 22, 1959

TO LOS ANGELES - AREA LEGAL

FROM MANAGER - TORRANCE PLANT

SUBJECT PRIVATE DUMP AND OVERPASS PERMITS

As requested by Mr. B. G. Warren, we are enclosing the following for your further handling:

1. Business License for the year 1960 with Los Angeles County covering a private dump at 19500 S. Moneta Street.

2. Letter of Certification from the County of Los Angeles regarding Item 1 above.

3. Permit Agreement with the City of Los Angeles, dated November 26, 1956, covering the Vermont Street Overpass Bridge and related data.

Original Signed by N. K. Grover

For G. S. Williamson

Enclosures (3)

APPROVED FOR FILE

TORRANCE
SP-0013260

December 29, 1959

Shell Chemical Co
Private Dump Site

The Honorable Board of Supervisors of the County of Los Angeles
220 N. Broadway
Los Angeles 12, California

Gentlemen:

As you know, Shell Chemical Corporation (the wholly owned subsidiary of the undersigned Shell Oil Company) has been granted a renewal of its business license (No. 87753 C) to operate a solid fill disposal facility located at 19500 South Moneta Street in the Torrance Area of Los Angeles County.

Effective at the close of business on December 31, 1959, Shell Chemical Corporation will be merged with and its business conducted as a division of Shell Oil Company, the parent Company. Operations, facilities and personnel will remain unchanged.

We assume that you will wish to reflect this change in your records, and will be happy to furnish any further particulars you may require.

Yours very truly,

SHELL OIL COMPANY

ORIGINAL SIGNED BY M. W. SHEPPARD, JR.

By_____
Manager, Land Department

BGW:mmb

cc - County Engineer
108 W. Second Street
Los Angeles 12, California

County Tax Collector
1540 S. Hill Street
Los Angeles, California

bcc - Shell Chemical - Torrance
Area Legal

APPROVED FOR FILE

TORRANCE
SP-0013257

December 29, 1959

Shell Chemical Co.
Private Dump Site

The Honorable Board of Supervisors of the County of Los Angeles
220 N. Broadway
Los Angeles 12, California

Gentlemen:

As you know, Shell Chemical Corporation (the wholly owned subsidiary of the undersigned Shell Oil Company) has been granted a renewal of its business license (No. 87753 C) to operate a solid fill disposal facility located at 19500 South Normandie Street in the Torrance Area of Los Angeles County.

Effective at the close of business on December 31, 1959, Shell Chemical Corporation will be merged with and its business conducted as a division of Shell Oil Company, the parent Company. Operations, facilities and personnel will remain unchanged.

We assume that you will wish to reflect this change in your records, and will be happy to furnish any further particulars you may require.

Yours very truly,

SHELL OIL COMPANY

By_____
Manager, Land Department

BOW:mab

cc - County Engineer
108 W. Second Street
Los Angeles 12, California

✓ County Tax Collector
1840 S. Hill Street
Los Angeles, California

bcc - Shell Chemical - Torrance
Area Legal

APPROVED FOR FILE

TORRANCE
SP-0013258

Prop 187

PC . THIS LICENSE IN A CONSPICUOUS LACE

COUNTY LICENSE

No. 18801

COUNTY OF LOS ANGELES - STATE OF CALIFORNIA

THE LICENSEE NAMED HEREON HAS PAID TO THE UNDERSIGNED TAX COLLECTOR THE AMOUNT SHOWN AND IS HEREBY LICENSED, UNDER PROVISIONS OF ORDINANCE No. 5860, FOR THE PERIOD EXPIRING ON THE DATE SHOWN, TO CARRY ON THE BUSINESS OR OCCUPATION SPECIFIED, AT THE LOCATION SHOWN (IN THE CASE OF A STATIONARY BUSINESS), OR TO OPERATE THE VEHICLE SPECIFIED. THIS LICENSE IS SUBJECT TO ANY SPECIAL CONDITIONS SHOWN AND IS VALID ONLY IN THE UNINCORPORATED TERRITORY OF LOS ANGELES COUNTY.

LICENSEE, LOCATION - BUSINESS, OCCUPATION, OR VEHICLE

JAN 13 '60 — DATE OF ISSUE

SHELL OIL COMPANY DUMP PRIVATE
P.O. BOX 211 A-17376
TORRANCE, CALIF. $125.00
KNOX, BETWEEN MATH & MOMETA

DEC 31 '61 — EXPIRATION DATE

LICENSE FEE

COUNTY TAX COLLECTOR
AND EX-OFFICIO COUNTY LICENSE COLLECTOR

SPECIAL CONDITIONS

PENALTY COLLECTED Subject to attached certification. DATE NO.

COUNTERSIGNED

Roscoe Hollinger

COUNTY AUDITOR-CONTROLLER

76L325 - 1-60 © LA

THIS LICENSE IS NOT TRANSFERABLE

APPROVED FOR FILE

TORRANCE
SP-0013239

LICENSE COLLECTOR
COUNTY OF LOS ANGELES
1840 South Hill Street
Los Angeles 15, California

APPLICATION FOR

BUSINESS LICENSE

FA 1-2340

KIND OF BUSINESS Private Industrial Waste Disposal Facility Tel. No. (Torrance)

ADDRESS OF BUSINESS North side of Knox St., between Main and Moneta
NUMBER STREET CITY ZONE

NEAREST CROSS STREET

FULL NAME OF APPLICANT Shell Oil Company
(STATE WHETHER CORPORATION, PARTNERSHIP, INDIVIDUAL OR OTHER STATUS)

DOING BUSINESS AS Shell Chemical Company

IF A CORPORATION, EXACT CORPORATE NAME IS Shell Oil Company

Date of Incorporation Feb. 8, 1922 Incorporated in State of Delaware

NAMES OF OFFICERS	ADDRESSES	TITLES
Applicant's Officers in the County of Los Angeles are:		
S. F. Bowlby	1008 W. 6th St., L. A. 54	Vice-President
H. M. Gullickson	1008 W. 6th St., L. A. 54	Ass't. Secy.

Underline Above Officer Authorized To Accept Service of Legal Process.

IF A PARTNERSHIP, SHOW BELOW THE NAMES OF PARTNERS, ADDRESSES, & INTEREST HELD

NAMES OF PARTNERS	ADDRESSES	% INTEREST HELD

MAILING ADDRESS P. O. Box 211 Torrance, California
STREET CITY ZONE

DATE BUSINESS STARTED Under Applicant: Jan. 1, 1960. Under previous owner: April 25, 1955.

PREVIOUS OWNER'S NAME, (IF KNOWN) Shell Chemical Corporation

THIS IS AN APPLICATION FOR: NEW LICENSE X RENEWAL

APPLICANT MUST WITHIN FIVE DAYS THEREAFTER NOTIFY THIS OFFICE IN WRITING OF ANY CHANGE IN ANY FACTS REQUIRED BY THIS APPLICATION.

The information contained herein is true and correct to the best of my knowledge and belief. As a condition for the issuance of the license applied for, I agree; to submit any additional information that may be required; to conduct all phases of this business in accordance with regulations established for such business and to maintain all trucks or equipment that may be used in connection therewith, in conformance with all applicable laws, ordinances, and regulations.

Date February 24, 1960 Applicant's Signature Shell Oil Company

By M W Shepard
Manager, Land Department, Los Angeles Office

BELOW FOR OFFICE USE ONLY

Bond Insurance Zoning By

76B910A—6/58

TORRANCE
SP-0013246

All applicants for a Dump, Waste Disposal Facility, Hog Ranch, or a Waste Haulers and/or Collectors License must also fill out the following:

If a corporation, give name and address of every stockholder owning not less than 10% of the stock.

NAME	ADDRESS
J. P. Morgan & Co., Incorporated as Trustee under the Indenture dated as of October 1, 1948, made by Shell Caribbean Petroleum Company.	C/O Morgan Guarantee Trust Company, 140 Broadway, New York, New York

List every person having an interest of not less than 10% in the business or activity to be licensed and the amount thereof.

NAME	ADDRESS	% INTEREST HELD
Applicant only		

List every person having any right, title, or interest in the premises, or any part thereof, upon which the business or activity is to be carried on. If any such person is a corporation, give same information as required of a corporate applicant.

NAME	ADDRESS
Applicant only	

TORRANCE
SP-0013247

Give description of trucks and other mechanical equipment owned by or under control of the applicant.

MAKE	CAPACITY	VEHICLE LICENSE NUMBER	PROPOSED USE
1952 Chevrolet	1½ Ton Truck	J 89177	Hauling fill and
1952 Ford	1½ Ton Truck	E 92736	debris from our plant
1955 International	1½ Ton Truck	E 92713	at 19821 So. Figueroa
1953 White	2 Ton Truck	E 92740	to this dump

Description of the waste disposal facility or dump proposed to be provided, including its location and a schedule of charges proposed to be made.

Lot 115 of Tract 4671 - Between Moneta Ave. and Main St., North of Knox St. Dump will be used solely by applicant.

LAM-200 R... 5-58
Printed ... U.S.A.

SHELL OIL COMPANY

CHECK REQUEST

NO. _____

REASURY: PLEASE ISSUE CHECK AND FORWARD TO LAND DEPARTMENT.
AYABLE TO: SECURITY FIRST NATIONAL BANK OF LOS ANGELES
DDRESS
OVERING DRAFT NO. AL 1490 DATED FEBRUARY 25, 1960

CODED

TOTAL AMOUNT OF CHECK $25.00

EQUESTED BY: CKA:MD DATE ... 1960 APPROVED BY: ORIGINAL SIGNED BY J. E. MOHR

ISTRIBUTEES: NAME ADDRESS AMOUNT

C 62B

H. L. Byram, Tax Collecot 1840 So Hill St. L. A., Calif.

EA _____ L.O.R. L.A. OTHER _____ LEASE NAME _____

TION OR ASE DATE _____ TERM OF OPTION _____ LSE. DRLG. TIME _____ ACREAGE: GROSS NET _____

SMT. TE _____ INT: FULL OR WHAT FRACTION _____ RENTAL: PER ACRE _____

	DEPT.	LINE	ITEM	SUB.	ANA.	C	T	DET.	LOCATION	AUTHOR. NO.	CL.	AMOUNT
NTAL PERIOD _____ TO _____	01	76		000	000	1	7	20			00	
NSIDERATION FOR ASSIGNMENT	01	62	22	000	001	0	8					
NSIDERATION FOR OPTION	01	62	22	000	002	0	8					
MMISSIONS, AGENTS FEES AND EXPENSES	01	33	01	000	032	1	2	00			00	
VANCE TO BROKER OR AGENT _____ NAME	01	53	53									
HER: RECORD, FILING, BANKING FEES	01	33	01	000	031	1	2	00			00	
NDRY (DESCRIBE) Shell Chem. Shell Oil Dump Permit	01	55	01	000	010				000000			$25.00

TORRANCE
SP-0013241

16-4
1220

DATED AT Los Angeles, Calif THIS 25th DAY OF February 1960

SHELL OIL COMPANY

1008 WEST SIXTH STREET LOS ANGELES, CALIFORNIA

No. AL 1490

TORRANCE
SP-0013242

WILL PAY TO THE ORDER OF H. L. Byram, Tax Collector $25.00

DUPLICATE—NOT NEGOTIABLE

Twenty Five and no/100 DOLLARS

PAYABLE THROUGH
5TH AND SPRING OFFICE
SECURITY-FIRST NATIONAL
BANK OF LOS ANGELES
FIFTH AND SPRING STREETS
LOS ANGELES, CALIFORNIA
H. O. 20AL (REV.) 5-51 PRINTED IN U.S.A.

ORIGINAL HEREOF RECEIVED AND ACCEPTED AS PAYMENT
IN FULL OF ADVANCE RENTAL UNDER
OIL AND GAS LEASE
Shell Chem - Shell Oil Dump Permit

SHELL OIL COMPANY

BY [signature]
AGENT

AREA

AUTHORITY NO.

PAYEE'S ADDRESS 1840 S. Hill St.

L.A.

OPTION DATE: TERM

LEASE DATE: DRLG. TIME

ASSIGNMENT DATE

ACREAGE: GROSS NET

INTEREST FULL OR WHAT FRACTION

RENTAL $ $ PER ACRE TOTAL $

TO

(PERIOD COVERED)

CONSIDERATION $

COMM./BROKER'S FEES $

ADVANCE TO BROKER (STMT. TO FOLLOW) $

OTHER EXP. (DESCRIBE) $

01-5501-000-010-000000

TORRANCE

SP-0013243

JOHN A. LAMBIE
COUNTY ENGINEER

HARVEY T. BRANDT
CHIEF DEPUTY

COUNTY OF LOS ANGELES
DEPARTMENT OF COUNTY ENGINEER
INDUSTRIAL WASTE DIVISION

619 H. W. HELLMAN BUILDING
354 SOUTH SPRING STREET
LOS ANGELES 13, CALIFORNIA
MADISON 9-4747

ARTHUR PICKETT
DIVISION ENGINEER

JOHN L. PARTIN
ASSISTANT DIVISION ENGINEER

File Shell Chemical Div.
Private Dump Site

February 26, 1960

Shell Oil Company
1008 West 6th Street
Los Angeles 54 California

Attention Mr. M. W. Sheppard, Jr.

Gentlemen:

SHELL OIL COMPANY (I-903)

Effective immediately upon receipt of this letter, Condition No. 1 of Industrial Waste Disposal Permit No. 2093 is amended to read as follows:

1. This Permit is issued to the SHELL OIL COMPANY, doing business as Shell Chemical Corporation for the operation of a solid fill disposal facility located on Moneta Avenue adjacent to the Dominguez Flood Control Channel on approximately 3 acres of land operating under a prior use right consideration by the Regional Planning Commission.

All other Conditions and Limitations of the above permit shall remain in full force and effect.

Very truly yours,

John A. Lambie
COUNTY ENGINEER

Arthur Pickett

Arthur Pickett
Division Engineer
Industrial Waste Division

AGP-JHE:hf

TORRANCE
SF-0013245

SFUND RECORDS CTR
2053529

JOHN A. LAMBIE
COUNTY ENGINEER

HARVEY T. BRANDT
CHIEF DEPUTY

COUNTY OF LOS ANGELES
DEPARTMENT OF COUNTY ENGINEER
INDUSTRIAL WASTE DIVISION

619 H. W. HELLMAN BUILDING
354 SOUTH SPRING STREET
LOS ANGELES 13, CALIFORNIA
MADISON 9-4747

ARTHUR PICKETT
DIVISION ENGINEER

JOHN L. PARTIN
ASSISTANT DIVISION ENGINEER

Sub Shell Chemical Div.
Private Dump Site

February 26, 1960

Shell Oil Company
1008 West 6th Street
Los Angeles 54 California

Attention Mr. M. W. Sheppard, Jr.

Gentlemen:

SHELL OIL COMPANY (I-903)

Effective immediately upon receipt of this letter, Condition No. 1 of Industrial Waste Disposal Permit No. 2093 is amended to read as follows:

1. This Permit is issued to the SHELL OIL COMPANY, doing business as Shell Chemical Corporation for the operation of a solid fill disposal facility located on Moneta Avenue adjacent to the Dominguez Flood Control Channel on approximately 3 acres of land operating under a prior use right consideration by the Regional Planning Commission.

All other Conditions and Limitations of the above permit shall remain in full force and effect.

Very truly yours,

John A. Lambie
COUNTY ENGINEER

Arthur Pickett

Arthur Pickett
Division Engineer
Industrial Waste Division

AGP-JHE:hf

DUPLICATE DOCUMENT
Do not [illegible] Records Center

TORRANCE
SP-0013245

LICENSE COLLECTOR
COUNTY OF LOS ANGELES
1840 South Hill Street
Los Angeles 15, California

SFUND RECORDS CTR
2053530

DUPLICATE DOCUMENT
Do not send to Records Center

APPLICATION FOR
BUSINESS LICENSE

FA 1-2340

KIND OF BUSINESS Private Industrial Waste Disposal Facility Tel. No. (Torrance)

ADDRESS OF BUSINESS North side of Knox St., between Main and Wanata
NUMBER STREET CITY ZONE

NEAREST CROSS STREET

FULL NAME OF APPLICANT Shell Oil Company
(STATE WHETHER CORPORATION, PARTNERSHIP, INDIVIDUAL OR OTHER STATUS)

DOING BUSINESS AS Shell Chemical Company

IF A CORPORATION, EXACT CORPORATE NAME IS Shell Oil Company

Date of Incorporation Feb. 8, 1922 Incorporated in State of Delaware

NAMES OF OFFICERS	ADDRESSES	TITLES
Applicant's Officers in the County of Los Angeles are:		
S. F. Bowlby	1008 W. 6th St., L. A. 54	Vice-President
H. M. Gullickson	1008 W. 6th St., L. A. 54	Ass't. Secy.

Underline Above Officer Authorized To Accept Service of Legal Process.

IF A PARTNERSHIP, SHOW BELOW THE NAMES OF PARTNERS, ADDRESSES, & INTEREST HELD

NAMES OF PARTNERS	ADDRESSES	% INTEREST HELD

MAILING ADDRESS P. O. Box 211 Torrance, California
STREET CITY ZONE

DATE BUSINESS STARTED Under Applicant: Jan. 1, 1960. Under previous owner: April 25, 1955.

PREVIOUS OWNER'S NAME, (IF KNOWN) Shell Chemical Corporation

THIS IS AN APPLICATION FOR: NEW LICENSE X RENEWAL

APPLICANT MUST WITHIN FIVE DAYS THEREAFTER NOTIFY THIS OFFICE IN WRITING OF ANY CHANGE IN ANY FACTS REQUIRED BY THIS APPLICATION.

The information contained herein is true and correct to the best of my knowledge and belief. As a condition for the issuance of the license applied for, I agree; to submit any additional information that may be required; to conduct all phases of this business in accordance with regulations established for such business and to maintain all trucks or equipment that may be used in connection therewith, in conformance with all applicable laws, ordinances, and regulations.

Date February 24, 1960 Applicant's Signature Shell Oil Company

By W. Shepard
Manager, Land Department, Los Angeles Office

BELOW FOR OFFICE USE ONLY

Bond Insurance Zoning By

TORRANCE

76R910A—6/58

SFUND RECORDS CTR
2053531

DUPLICATE DOCUMENT
Do not send to Records Center

POST THIS LICENSE IN A CONSPICUOUS PLACE

COUNTY LICENSE

No. 87753 C

COUNTY OF LOS ANGELES STATE OF CALIFORNIA

DEC 18'59

SHELL CHEMICAL CORP. DUMP, PRIVATE
P.O. BOX 211 A-42004
TORRANCE, CALIF. $125.00
19500 S. MONETA ST.

Dec 31'60

COUNTY TAX COLLECTOR

Subject to attached certification

THIS LICENSE IS NOT TRANSFERABLE

The original returned to license div. Tax Collector Office to be used as partial payment ($2.5) on new application

SFUND RECORDS CTR
2053532

JOHN A. LAMBIE
COUNTY ENGINEER

COUNTY OF LOS ANGELES
DEPARTMENT OF COUNTY ENGINEER

108 WEST SECOND STREET
LOS ANGELES 12, CALIFORNIA
MADISON 9-4747

HARVEY T. BRANDT
CHIEF DEPUTY
LLOYD B. KNOX
ASST. CHIEF DEPUTY
WILLIAM H. KRELLE
ASST. CHIEF DEPUTY

November 23, 1959

DUPLICATE INCOMING
Board of Supervisors

Honorable Board of Supervisors
County of Los Angeles
California

Gentlemen:

TORRANCE PLT.
DEC 21 1959

CERTIFICATION - RENEWAL OF BUSINESS LICENSE
SHELL CHEMICAL CORPORATION (I-903)
NOT OPEN TO THE PUBLIC
FOURTH SUPERVISORIAL DISTRICT

Enclosed is a copy of Business License Application No. 42004 as submitted to the County Tax Collector pursuant to provisions of Ordinance No. 5860 (Business License Ordinance) by the Shell Chemical Corporation for renewal of their business license to operate a solid fill disposal facility located at 19500 South Moneta Street, Torrance Area. The Regional Planning Commission has filed a written statement certifying that the continued dumping of solid fill material for which no charge is made, will not violate Ordinance No. 1494 the Zoning Ordinance.

The applicant has stated that the Shell Chemical Company is the sole owner of the premises and has furnished this office with the names and addresses of the directors of the corporation. These statements are on file in the office of the County Engineer

RECEIVED
DEC 21 3 32 PM '59

APPROVED BY
BOARD OF SUPERVISORS

DEC - 8 1959

Gordon T. Nesvig
Clerk of the Board

TORRANCE
SP-0013249

and may be reviewed any time upon request. This facility is operating under the control of Industrial Waste Permit No. 2093 issued by the County Engineer.

As a result of properly conducted disposal methods, a low existing area partly under water during certain portions of the year, will be filled and the resulting land may be put to beneficial use.

Pursuant to the provisions of Section 2231 of said Ordinance No. 5860, the County Engineer submits the following

CERTIFICATION:

a. The applicant is a corporation, and as such, is in the opinion of the County Engineer, a fit person to possess the required license.

b. This is a private disposal facility to be used only by the applicant, and therefore, no price list is required.

c. The applicant has stated that the waste disposal facility is not open to the public.

d. Since the facility is not open to the public, no sign is required.

e. Equipment for maintenance of this facility has been checked by the County Engineer and appears to comply with all applicable laws, ordinances, and regulations.

f. The Director of Planning of the Regional Planning Commission has filed a written statement with the County Engineer certifying that the proposed use will not violate provisions of Ordinance No. 1494 (Zoning Ordinance).

TORRANCE
SP-0013250

g. Representatives of the Office of the County Fire Warden, County Health Officer, and the State Water Pollution Control Board No. 4 have indicated that applicable ordinances or regulations can be met by the applicant, provided the operation is controlled in accordance with the conditions of the above mentioned Industrial Waste Permit.

h. Enforcement of the Business License Ordinance will be facilitated and the project will not menace or endanger the public health and safety provided the licensee conducts all operations pursuant to the conditions and limitations of his Industrial Waste Permit, and further, the applicant has filed Faithful Performance Bond No. 9670544 with your Board in the amount of $5,000 which obligates him to comply with all of the terms and conditions of any permit or license granted.

i. In the opinion of the County Engineer, the operation and maintenance of this disposal facility, pursuant to the conditions and limitations of the Industrial Waste Permit, will not be a menace to or endanger the public health, safety or general welfare.

j. The location is proper, provided the conditions and limitations of the operating permit, issued in accordance with the provisions of Ordinance No. 6130, are established as the minimum operating requirements.

k. The applicant has, under his control, in good mechanical condition, the necessary mechanical equipment and supplies to adequately conduct his business.

m. Since this is limited to a solid fill operation, it is recommended that the license provide that neither garbage nor market refuse may be deposited at this site

TORRANCE
SP-0013251

The County Engineer

RECOMMENDS

That your Board:

1. Make the findings as required by Section 2234 of Ordinance No. 5860 which are as follows:

   a. That the applicant is a fit person to possess such license.

   b. That the location is proper.

   c. That the applicant owns or has under his control, in good mechanical condition, sufficient equipment and mechanical supplies to adequately conduct his business.

   d. That the equipment and facilities can conform with all applicable laws, ordinances and regulations.

   e. That the Director of Planning of the Regional Planning Commission has filed a written statement with the County Engineer certifying that the proposed use will not violate, in any way, Ordinance No. 1494, the Zoning Ordinance.

   f. That all applicable ordinances and regulations will be met by the applicant.

   g. That the proposed operations will not be a menace to or endanger the public health, safety, or general welfare.

   h. That the required bond has been filed.

2. Notify the applicant of your proposed action and advise the applicant that the Board will take such action, unless within five days after receipt of such notice, the applicant demands in writing a hearing as provided in Section 2233 of Ordinance No. 5860.

TORRANCE
SP-0013252

3. Advise the County Engineer of any special conditions or regulations which, in the opinion of the Board of Supervisors, should be included in the operating permit issued by the County Engineer.

4. Instruct the Tax Collector to issue the required Business License when Certification of the County Engineer, duly approved by the Clerk of the Board, has been filed with the Tax Collector, to be attached to and made a part of the Business License.

Yours respectfully,

John A. Lambie
COUNTY ENGINEER

JAL-CJF:dm

Enc.

cc: 14 Communications Section
5 Supervisors
1 CAO
1 County Counsel

TORRANCE
SP-0013253

SFUND RECORDS CTR
2056227

INDUSTRIAL WASTE PERMITS

PERMIT NUMBER	DATE ISSUED	ANNUAL FEE	CANCELLATION DATE	FOR
W-16933	8-18-58	~~$10.00~~		Lime Soda-Ash Water Softening - BD Plant
W-16725	8-15-58	~~$10.00~~		Polymerization Catalysis and Lime Soda-Ash Water Softening - Styrene Plant
W-16241	6-26-58	~~$10.00~~		Cooling Water from Extruder and Laboratory Waste - BD Plant
W-13767	3-28-57	~~$10.00~~		Experimental and Production Control Laboratory - Copolymer Plant (19201 S. Vermont)
W-13291	3-28-57	~~$10.00~~		Production Control Laboratory - Copolymer Plant (19208 S. Vermont)
W-13107	10- 9-56	~~$10.00~~		Laboratory Wastes - Styrene Plant

DUPLICATE DOCUMENT
Do not send to Records Center

TORRANCE
SO-0013746

PD 324 11-50 PRINTED IN U.S.A.

SFUND RECORDS CTR
2051333

Shell Chemical Torrance, ASSG'D TO R/W File

LOG OF TRANSACTION

MATTER Lot 115 Permit to Dump AREA Shell Chemical Corp Torrance

Mo.	Da.	Yr.		By
8	19	58	Joe Leonard will prepare sketch ~~for~~ showing Dump Site. Quintana says okay for Civil Engineers to go ahead with drawing But if not acceptable to Co, they will require a registered Civil Engineer to draw same.	[illegible]
9	23	58	Martin of Shell chemical called. Says maps are ready.	[illegible]
9	24	58	Maps picked up	[illegible]
9	24	58	Quintana says to make out Business License application at tax collectors office (see Mr. Olson) and to send maps to him. (Quintana.) Also, we will be notified when to file the bond	[illegible]
9	25	58	Took application to Shell Chem - They are preparing same for NY's Signature - and will get ck in amt of $150.00	[illegible]
10	30	58	Permit Signed - taken to tax Collector who advised 1959 pymt due Nov 15th A.E. Martin so advised.	[illegible]
11	12	58	Application and paymt for 1959 sent to tax Collectors office	[illegible]
11	12	58	TOCKA and General Files	[illegible]

TORRANCE
SP-0015758

PD 334 11-50 PRINTED IN U.S.A.

ASSG'D TO

LOG OF TRANSACTION

MATTER Lot 115 - Permit to Dump AREA Shell Chem Torrance

Mo.	Da.	Yr.		By
6	6	58	Memo from Shell Chem forwarding letter from County in regards to our future dumping on Lot 115	R
7	1	58	County Advised that we are contemplating future dumping on this lot	R
7	3	58	Shell Chem Advised as to our position	R
7	3	58	Quintana of L.A. Engineers advised that he's waiting for Regional Planning Comm to decide whether we'll need a new Zoning Permit. We are to await Quintana's phone call before further action required. MU 94747 EXT 386	R
7	8	58	Quintana called and advised that we should make written application pursuant to his letter of 5/5/58.	R
7	10	58	Application sent to L.A. County	R
7	23	58	Quintana of Waste Disposal Division said to get in touch with Bedebenner of Zoning Comm. Office. Phoned Bedebenner (MU 9211 EXT 4509) who said that we should make a "Class 3 application". Quintana will see if revised letter necessary	R
8	14	58	Quintana says for us to go ahead with forms he sent us by his May letter - There will be no charge. - Send map 1" = 50' - show fence line - gate - streets - how high we intend to fill property - contours of land.	

TORRANCE
SP-0015759

Cash ☐ Check ☑ Cashier Check ☐ M. O. ☐ Postal Note ☐ 76L-330M-9-28-P-6-58

H. L. BYRAM—TAX and LICENSE COLLECTOR—Los Angeles, Calif.

TORRANCE
SP-0013237

47376

LICENSE FEE DEPOSIT

Received from Shell Oil Co. $ 125.00

Address No. side Knox between Main & Monroe City

Fee to be deposited in Tax Collector's Trust Fund, pending approval of the application for—

Mail P.O. Box 211 Dump (Private)
(Type of Business)
Instructions for Processing

☐ Apply to — Basic License No. M. McCauley
DEPUTY TAX COLLECTOR

☐ Apply to — Investigation Costs $

APPLICANT'S RECEIPT

Dated 10/28/60

☐ Apply to — Refund to Applicant $

NOTICE: Where application is denied, a portion of the above amount will be retained by the Tax Collector to reimburse the County for the cost of inspection.—The balance is subject to refund to the applicant.

THIS IS NOT A LICENSE and authority to operate a business is NOT granted by this license fee deposit.

SC 1003 (Rev. 1/60)—Printed in U.S.A.

REFERENCE

SHELL CHEMICAL COMPANY

DATE OCTOBER 27, 1960

TO LOS ANGELES - AREA LAND -
MR. C. K. ALBRIGHT

FROM TREASURY MANAGER -
TORRANCE PLANT

SUBJECT PRIVATE DUMP
LICENSE RENEWAL

Attached are the following documents which we will appreciate your handling with the respective Los Angeles County offices:

1. Application for Business License - Private Dump
2. Check No. 49320-1027 in the amount of $125.00
3. Supplemental Information to Application for Business License (two documents)
4. Letter to the County Engineer regarding temporary lack of fencing around our dump

N. T. Grover

For J. D. Morton

Attachments (4)

Item 4 delivered to Mr Peskett, 224 Higgins Bldg & other materials to Tax collector, new adm. Bldg 10/28 HP

TORRANCE
SP-0013240

SC 1003 (Rev. 1/60)—Printed in U.S.A.

SHELL CHEMICAL COMPANY

REFERENCE

SFUND RECORDS CTR
2053527

DATE OCTOBER 27, 1960

TO LOS ANGELES - AREA LAND -
MR. C. K. ALBRIGHT

FROM TREASURY MANAGER -
TORRANCE PLANT

SUBJECT PRIVATE DUMP
LICENSE RENEWAL

Attached are the following documents which we will appreciate your handling with the respective Los Angeles County offices:

1. Application for Business License - Private Dump
2. Check No. 49320-1027 in the amount of $125.00
3. Supplemental Information to Application for Business License (two documents)
4. Letter to the County Engineer regarding temporary lack of fencing around our dump

N. T. Grover

For J. D. Morton

Attachments (4)

Item 4 delivered to Mr Peskitt, 224 Higgins Bldg & other materials to Tax collector, new adm. Bldg 10/28 HP

DUPLICATE DOCUMENT
Do not send to Records Center

TORRANCE
SP-0013240

LAM-200 Rev. 5-58
Printed in U.S.A.

SHELL OIL COMPANY

CHECK REQUEST

SFUND RECORDS CTR
2053528

NO. _____

TREASURY: PLEASE ISSUE CHECK AND FORWARD TO LAND DEPARTMENT.
PAYABLE TO: SECURITY FIRST NATIONAL BANK OF LOS ANGELES
ADDRESS
COVERING DRAFT NO. AL 1490 DATED FEBRUARY 25, 1960

DUPLICATE DOCUMENT
Do not send to Records Center

CODED

TOTAL AMOUNT OF CHECK $25.00

REQUESTED BY: CKA:MD DATE MAR 3 1960 APPROVED BY: ORIGINAL SIGNED BY J. E. MOHR

DISTRIBUTEES: NAME	ADDRESS	AMOUNT
H. L. Byram, Tax Collecot	1840 So Hill St. L. A., Calif.	

C 62B

AREA _____ L.O.R. L.A. OTHER _____ LEASE NAME _____

OPTION OR LEASE DATE _____ TERM OF OPTION _____ LSE. DRLG. TIME _____ ACREAGE: GROSS NET _____

ASSMT. DATE _____ INT: FULL OR WHAT FRACTION _____ RENTAL: PER ACRE _____

	DEPT.	LINE	ITEM	SUB.	ANA.	C	T	DET.	LOCATION	AUTHOR. NO.	CL.	AMOUNT
RENTAL PERIOD _____ TO _____	01	76		000	000	1	7	20			00	
CONSIDERATION FOR ASSIGNMENT	01	62	22	000	001	0	8					
CONSIDERATION FOR OPTION	01	62	22	000	002	0	8					
COMMISSIONS, AGENTS FEES AND EXPENSES	01	33	01	000	032	1	2	00			00	
ADVANCE TO BROKER OR AGENT _____ NAME	01	53	53									
( ): RECORD, FILING, BANKING FEES	01	33	01	000	031	1	2	00			00	
SUNDRY (DESCRIBE) Shell Chem. Shell Oil Dump Permit	01	55	01	000	010				000000			$25.00

TORRANCE
SP-0013241

TORRANCE
SP-0013242

SHELL OIL COMPANY

No AL 1490

WILL PAY TO THE ORDER OF

DUPLICATE NOT NEGOTIABLE

DOLLARS

SHELL OIL COMPANY

SECURITY FIRST NATIONAL BANK OF LOS ANGELES

AGENT

02830 4-66 PTD. IN U.S.A.

TO N. GROVER

For his files.

FROM

Ordinance No. 116,344

An Ordinance amending Sections 39.59 and 39.59.1 of the Los Angeles Municipal Code and adding Section 39.59.2 thereto, so as to provide requirements and regulations to protect the public health from exposure to ionizing radiation from the peaceful use of machines, devices or materials not regulated exclusively by the State of California or by the United States, and to provide for an inspection program in connection therewith, supplemental to and operated in conjunction with the State of California program of registration of radiation sources.

THE PEOPLE OF THE CITY OF LOS ANGELES DO ORDAIN AS FOLLOWS:

Section 1. Section 31.00 of the Los Angeles Municipal Code is hereby amended by adding the following definitions thereto, said new definitions to read:

"Educational, Research or Hospital Radiation Facility" shall mean a facility wherein there may be a number of sources or devices which emit ionizing radiation, and where such facilities are under the continuous supervision of a person qualified to supervise the handling and use of such devices or materials in accordance with the requirements of this Chapter and the Rules and Regulations of the Board.

"Radiation Facility — Diagnostic, Limited" shall mean an office or establishment occupied or used by not more than three licensed practitioners, whose use of ionizing radiation is incidental to other practice, where there are not to exceed two diagnostic radiation machines and where there are not to exceed 200 millicuries of radioactive materials at any one time.

"Radiation Facility — Therapeutic, Limited" shall mean an office or establishment occupied or used by a licensed practitioner, whose use of ionizing radiation is incidental to other practice, where there is not to exceed one therapeutic machine and one diagnostic machine, and where there is not to exceed 200 millicuries of radio-active materials at any one time.

"Radiation Machine" shall mean any device, machine, contrivance or equipment which produces, or which can be operated to produce ionizing radiation. Radiation Machine shall include devices in which there is control of the direction of the radiation emitted and in which there is radioactive material as the source of ionizing radiation.

"Radiation Machine — Industrial" shall mean a radiation machine used for other than medical diagnosis, treatment or research on man or animals.

"Radiation Machine — Therapeutic" shall mean a radiation machine used primarily for therapy and treatment.

"Radioactive Material" shall mean any material or substance that emits ionizing radiation spontaneously, except nuclear materials under the exclusive control of the United States Atomic Energy Commission.

"Radioactive Material — Limited Use" shall mean an office or establishment wherein one radionuclide is used incidentally to the operation of the plant and does not exceed 200 millicuries total quantity of radioactive materials.

"Radiation Supplier" shall mean any person engaged in the business of renting, demonstrating, lending, selling or installing radiation machines or radioactive materials.

Sec. 2. Section 39.59 of the Los Angeles Municipal Code is hereby amended to read:

SEC. 39.59. IONIZING RADIATION - MATERIALS AND DEVICES

(a) No person shall possess, store, use, transport, handle or dispose of radioactive materials, nor use, provide or maintain for use any radiation machine unless used, handled, stored, and maintained, and facilities related to health protection against radiation are constructed, installed, maintained and operated in such a manner as to reasonably protect the health of any person who might be exposed to radiation produced or emitted thereby in accordance with rules and regulations adopted by the Board pursuant to Section 39.59.1.

(b) The provisions of this section and Section 39.59.1 shall not apply to the possession, storage, use, handling, transportation or disposition of any nuclear materials, devices or machines under the exclusive control and regulation of the United States Atomic Energy Commission; nor are said provisions intended to regulate, control or restrict the intentional irradiation of persons or animals for diagnosis, treatment or research performed by or under the direct supervision and control of persons duly licensed to practice the healing arts, including but not limited to duly licensed physicians, dentists and veterinarians.

(c) "Intentional exposure to ionizing radiation" as used herein is the use of ionizing radiation for diagnostic, therapeutic or experimental purposes by a duly licensed practitioner of the healing arts in such manner, amount or intensity as is necessary for the use intended.

(d) "Unintentional exposure to ionizing radiation" as used herein is any exposure to ionizing radiation which is not intentional.

Sec. 3. Section 39.59.1 of the Los Angeles Municipal Code is hereby amended to read:

SEC. 39.59.1 IONIZING RADIATION - RULES AND REGULATIONS

(a) The Board shall establish such rules and regulations as are reasonable and necessary to control health hazards which may result from the use of radioactive materials and radiation machines. Said rules and regulations shall provide for but need not be limited to the following:

1. Procedures, devices, controls, placement, or location of radiation machines and radioactive materials, including modifications of such machines or materials, in accordance with the need for such modification, as may be necessary to minimize unintentional exposure of any person to ionizing radiation.

2. Maximum permissable exposure levels as may be necessary to protect any person from unintentional exposure to ionizing radiation.

3. Maximum permissable exposure levels for emergency conditions as may be necessary to protect any person from unintentional exposure to ionizing radiation.

4. Standards for signs and symbols as may be necessary to identify areas, zones, and places where radiation exposure may take place.

5. Standards and requirements for the storage and disposal of radioactive wastes which are not under the exclusive regulation and control of the United States Atomic Energy Commission.

(b) The Board may adopt such recognized standards on maximum permissable levels of radiation exposure as may be necessary to protect the public health and as are consistent with applicable State and Federal requirements.

Sec. 4. The Los Angeles Municipal Code is hereby amended by adding Section 39.59.2 thereto, said new section to read:

SEC. 39.59.2 IONIZING RADIATION - INSPECTION - FEES

(a) In order to enforce the provisions of Sections 39.59 and 39.59.1, the Department shall inspect every radiation facility and machine, and all places possessing radiation materials which are not under the exclusive regulation and control of the United States Atomic Energy Commission.

(b) Subject to the provisions of this section, the following fees shall be collected for such inspection:

1.	Radiation machine - diagnostic for each such machine	$ 15.00
	Each additional diagnostic machine	5.00
	Maximum for Diagnostic machines	40.00
2.	Radiation facility - diagnostic, limited	15.00
3.	Radiation machine - therapeutic - for one such machine	25.00
	For each additional therapeutic or diagnostic machine	5.00
	Maximum for therapeutic and diagnostic machines	50.00
4.	Radiation facility - therapeutic, limited	25.00
5.	Industrial installation -	
	Fixed installation for one radiation machine	25.00
	For each additional machine	10.00
	Portable installation for one such radiation machine	50.00
	For each additional machine	25.00
6.	Radioactive material—Limited use of a single radioactive material	15.00
	For total of two or more radio-nuclides totaling under one Curie in one room or area	25.00
	For each additional total source of under one Curie in another room or area of the same facility	15.00
	For total source of over one Curie in one room or location	50.00
	For each additional total source of over one Curie in another room or area of the same facility	25.00
	Maximum fee for radionuclides under one registrant at one premise	100.00
7.	Education, research, or hospital radiation facility—unlimited as to number of machines or materials	50.00
8.	Radiation supplier—any individual or company engaged in loaning, renting or installing devices or materials emitting ionizing radiation	50.00
9.	Maximum fee for a single registrant at one location or premise	100.00

(c) Said fees shall be collected by the City Clerk in accordance with the provisions applicable to health permit registration fees as set forth in Section 31.07 and in subsections (a), (d) and (e) of Section 31.12; but shall not become due until the date of the initial inspection of the radiation facility, at which time the Department shall serve a notice that such fee is due and specify in such notice the amount of said fee. Said fee shall thereafter become due annually on the first day of the month during which the initial inspection was made and notice issued.

(d) Said fees, other than the fees established for radiation suppliers, shall not apply to a single machine, or to such quantities or types of materials as may be determined by the Board, which are owned, installed or used by or under the supervision of a radiation supplier, if such machine or material is on or at a premise or location four months or less.

(e) Said fees shall apply to all machines, facilities or installations in any location where they are or may be operated to generate ionizing radiation and to all listed radioactive materials or "materials" which are kept, handled, stored or are available for use within any building or on any premises in the City.

(f) No person shall fail, refuse or neglect to pay said fees. If said fees are not paid on or before the close of business on the last day of the month following the month in which the fee became due, an additional sum equal to 50% of the fee so required shall be imposed and such additional sum shall become a part of the fee required by this Chapter. In no case shall the penalty exceed the sum of $10.00. Where applications for payment are received prior to the date of delinquency but payment of the fee cannot be accepted pending approval by the Department, or supplemented information from the Department must be furnished to the City Clerk, the fee shall not be considered delinquent if paid within 30 days after notification of the amount due is mailed by the City Clerk. The penalty or any part thereof, may be waived by the Board upon recommendation of the Health Officer and with written approval of the City Attorney.

Sec. 5. The City Clerk shall certify to the passage of this ordinance and cause the same to be published in some daily newspaper printed and published in the City of Los Angeles.

I hereby certify that the foregoing ordinance was passed by the Council of the City of Los Angeles, at its meeting of June 3, 1960.

WALTER C. PETERSON, City Clerk,
By M. B. Wilson, Deputy.

Approved June 10, 1960.
NORRIS POULSON, Mayor.

File No. 92658 (B36119) June 27 1t

TORRANCE

SO-0015081

DECEMBER 15, 1960

CHIEF ENGINEER

J. C. GROENEWEGEN

INSPECTION OF RADIATION SOURCES BY REPRESENTATIVES OF THE HEALTH DEPARTMENT OF THE CITY OF LOS ANGELES.

Messrs. Rogers, Miller and Karbus inspected our installations on December 12, 1960. Each installation was checked with monitoring equipment to determine whether there was any excessive radiation. In all cases it was far below the legal tolerance.

The City of Los Angeles has established an inspection fee thru its newly enacted Ordinance, along with rules and regulations on Ionising Radiation. The fee for our installations is $75. This is due on or before December 22, 1960.

(ORIGINAL SIGNED BY J. C. GROENEWEGEN)

JCG:bet

J. C. Groenewegen

cc: E. B. Martin
R. M. Stager
R. G. Dodge
W. H. Probst
J. Anderson
J. Harlan
J. D. Morton ← Copy To
Engr. File 601-SE
Central Files

TORRANCE
SO-0015080

December 19, 1960

Walter C. Peterson, City Clerk
Room 1, City Hall
Los Angeles 12, California

Dear Sir:

Enclosed please find our check No.62560 1217, dated December 16, 1960 in the amount of $75.00 to cover the cost of a Health Permit required for the operation of our Radiation equipment.

Very truly yours,

Original Signed By
J. J. LEONARD

JCG:bet

For - J. Levada, Chief Engineer

cc: Treasury Dept.
J. C. Groenewegen
Engr. File 601-2E
Engr. File 602-1E
Central Files

TORRANCE
SO-0015079

February 8, 1961

File
Prop #189
ord. 77000
City of L.A.

Mr. H. M. Parker
Los Angeles - Area Land

Per your telephone request, attached is a copy of the 1961 Private Dump License for Torrance Plant.

Attachment

APPROVED FOR FILE

TORRANCE
SP-0013238

N. K. GROVER

February 8, 1961

Mr. H. M. Parker
Los Angeles - Area Land

Per your telephone request, attached is a copy of the 1961 Private Dump License for Torrance Plant.

Attachment

APPROVED FOR FILE

TORRANCE
SF-0013238

N. K. GROVER

SFUND RECORDS CTR
2053525

DUPLICATE DOCUMENT
Do not send to Records Center

Cash ☐ Check ☑ Cashier Check ☐ M. O. ☐ Postal Note ☐

76L 330M 9-28-P-6-58

H. L. BYRAM—TAX and LICENSE COLLECTOR—Los Angeles, Calif.

TORRANCE
SP-0013237

47376

LICENSE FEE DEPOSIT

Received from Shell Oil Co. $ 125.00

Address No. side Knox between Main & Monroe City

Fee to be deposited in Tax Collector's Trust Fund, pending approval of the application for—

Mail P.O. Box 211 Dump (Private)
(Type of Business)

Instructions for Processing

☐ Apply to — Basic License No.

M. McCauley
DEPUTY TAX COLLECTOR

☐ Apply to — Investigation Costs $

APPLICANT'S RECEIPT

Dated 10/28/60

☐ Apply to — Refund to Applicant $

NOTICE: Where application is denied, a portion of the above amount will be retained by the Tax Collector to reimburse the County for the cost of inspection.—The balance is subject to refund to the applicant.

THIS IS NOT A LICENSE and authority to operate a business is NOT granted by this license fee deposit.

SFUND RECORDS CTR
2053526

P THIS LICENSE IN A CONSPICUOUS PLACE

COUNTY LICENSE

No. 18801

COUNTY OF LOS ANGELES STATE OF CALIFORNIA

THE LICENSEE NAMED HEREON HAS PAID TO THE UNDERSIGNED TAX COLLECTOR THE AMOUNT SHOWN AND IS HEREBY LICENSED UNDER PROVISIONS OF ORDINANCE NO. 3649 FOR THE PERIOD EXPIRING ON THE DATE SHOWN TO CARRY ON THE BUSINESS OR OCCUPATION SPECIFIED AT THE PLACE OR PLACES OF USE OF A STATIONARY BUSINESS OR TO OPERATE THE VEHICLE SPECIFIED. THIS LICENSE IS SUBJECT TO ANY SPECIAL CONDITIONS SHOWN AND IS VALID ONLY IN THE UNINCORPORATED TERRITORY OF LOS ANGELES COUNTY

LICENSEE LOCATION BUSINESS OCCUPATION OR VEHICLE

JAN 13 '60 DATE OF ISSUE

SHELL OIL COMPANY DUMP PRIVATE
P.O. BOX 211 A-47376
TORRANCE, CALIF. $185.00
KNOX, BETWEEN MAIN & MONETA

DEC 31 '61 EXPIRATION DATE

LICENSE FEE

COUNTY TAX COLLECTOR

SPECIAL CONDITIONS

PENALTY COLLECTED Subject to attached certification.

COUNTERSIGNED

Roscoe Hollinger

COUNTY AUDITOR-CONTROLLER

THIS LICENSE IS NOT TRANSFERABLE

APPROVED FOR FILE

DUPLICATE DOCUMENT
Do not send to Records Center

TORRANCE
SP--0013239

AIR POLLUTION CONTROL DISTRICT - COUNTY OF LOS ANGELES
434 SOUTH SAN PEDRO STREET, LOS ANGELES 13, CALIFORNIA. MADISON 9-4711

J. Levada

APPLICATION

AUTHORITY TO CONSTRUCT AND PERMIT TO OPERATE

INSTRUCTIONS

A. A FILING FEE OF $10.00 MUST ACCOMPANY EACH APPLICATION. CHECKS OR MONEY ORDERS SHOULD BE MADE PAYABLE TO THE AIR POLLUTION CONTROL DISTRICT, COUNTY OF LOS ANGELES.

B. THIS APPLICATION MUST BE FILLED OUT COMPLETELY AND MUST BE FILED IN TRIPLICATE.

C. APPLICATIONS ARE INCOMPLETE UNLESS ACCOMPANIED BY DUPLICATE COPIES OF ALL PLANS, SPECIFICATIONS AND DRAWINGS REQUIRED. DETAILS REQUIRED FOR SPECIFIC EQUIPMENT ARE LISTED ON SEPARATE FORMS WHICH ARE AVAILABLE UPON REQUEST.

D. THIS APPLICATION MUST BE SIGNED BY A RESPONSIBLE MEMBER OF THE ORGANIZATION THAT IS TO OPERATE THE EQUIPMENT FOR WHICH APPLICATION IS MADE. INCOMPLETE APPLICATIONS ARE NOT ACCEPTABLE.

ENGINEERING AND EVALUATION & PLANNING DIVISION
ROBERT L. CHASS
DIRECTOR OF ENGINEERING

ENGINEERING DEPT.
JAN 26 1961
Chief Engr.
Asst. Chief Engr. Office
Asst. Engr. Field
Coll. Engr.
GOVERNMENTAL AGENCY
PLS. HDL.
DATE ANS.
ANS. BY
ENG. FILE

APPLICATION INFORMATION

1. PERMIT TO BE ISSUED TO (BUSINESS LICENSE NAME OF CORPORATION, COMPANY, INDIVIDUAL OWNER OR GOVERNMENTAL AGENCY THAT IS TO OPERATE THE EQUIPMENT): Shell Chemical Company

2. MAILING ADDRESS:
NUMBER P. O. Box 211 STREET Torrance, California CITY OR COMMUNITY ZONE

3. ADDRESS AT WHICH THE EQUIPMENT IS TO BE OPERATED:
NUMBER 20021 So. Vermont STREET Los Angeles, California CITY OR COMMUNITY ZONE

4. TYPE OF ORGANIZATION: CORPORATION [X] PARTNERSHIP [ ] INDIVIDUAL OWNER [ ] GOVERNMENTAL AGENCY [ ]

5. GENERAL NATURE OF BUSINESS:

6. EQUIPMENT DESCRIPTION. PURSUANT TO THE PROVISIONS OF THE STATE HEALTH AND SAFETY CODE AND THE RULES AND REGULATIONS OF THE AIR POLLUTION CONTROL DISTRICT, APPLICATION IS HEREBY MADE FOR AUTHORITY TO CONSTRUCT AND PERMIT TO OPERATE THE FOLLOWING EQUIPMENT:

(1) Sandblasting facilities

(2) Sand handling and storage facilities (one 1-1/2 hp motor)

7. ESTIMATED COST OF EQUIPMENT OR OF ALTERATION: AIR POLLUTION CONTROL EQUIPMENT: $ BASIC EQUIPMENT: $

8. PRESENT STATUS OF EQUIPMENT (CHECK AND COMPLETE APPLICABLE ITEMS):

		ESTIMATE STARTING DATE	ESTIMATE COMPLETION DATE
[ ]	CONSTRUCTION OR INSTALLATION NOT STARTED.		
[ ]	CONSTRUCTION OR INSTALLATION PARTLY COMPLETED.		
[X]	CONSTRUCTION COMPLETED.		1943
[ ]	EQUIPMENT IS TO BE ALTERED.		
[ ]	EQUIPMENT IS PARTLY ALTERED.		
[ ]	EQUIPMENT HAS BEEN ALTERED.		
[ ]	TRANSFER OF OPERATOR, OWNER OR LESSEE.		
[X]	TRANSFER OF LOCATION. (Moved handling & storage facilities)		Jan. 1959

9. IF THIS EQUIPMENT HAD A PREVIOUS WRITTEN PERMIT GIVE NAME OF CORPORATION, COMPANY OR INDIVIDUAL OWNER THAT OPERATED THIS EQUIPMENT AND STATE PREVIOUS AIR POLLUTION CONTROL DISTRICT PERMIT NUMBER, IF KNOWN.

NAME PERMIT NUMBER

10. SIGNATURE OF RESPONSIBLE MEMBER OF FIRM: → Original Signed by E. S. Martin

DATE OF APPLICATION: 1-23-61

11. TYPE OR PRINT NAME AND OFFICIAL TITLE OF PERSON SIGNING THIS APPLICATION.
NAME E. S. MARTIN
TITLE PLANT SUPERINTENDENT
PHONE NUMBER FA 1 2340

A-

VALIDATION (A.P.C.D. USE ONLY)

16-50D5 R9-60-1 Form 400-A

TORRANCE
SH-0007830

DESCRIPTION

The Pangborn sandblast machine, 1000 lb capacity, serial number 1A411-413, hose and nozzle was originally acquired in 1943. It was, and still is, transported to job locations anywhere in the plant to clean fixed equipment. Most of the time, however, it stands in the area marked in red on the plant plot plan where it is used on the order of once or twice a week to clean readily movable items of metal equipment.

In December, 1958, the sand handling and storage facilities were moved from elsewhere in the plant to the present location marked in red on the plant plot plan. The equipment moved consisted of a vertical bucket elevator manufactured by the Snyder Engineering Company, and the steel storage vessels. The elevator is driven by a 1.5 horsepower electric motor. This portion of the equipment is shown on drawings YT-8009-1 and YT-8006-2.

Application for permit is being made at this time because of a Request To Apply For APCD Permit issued January 20, 1961, by Enforcement. Application was not made previously because Rule 10a does not appear to apply and Rule 11a-13 appears to exempt equipment used for sanding metals. The heavy particulate matter originating from the sandblasting operation falls to the ground in the immediate vicinity where the work is being performed. No nuisance or annoyance has ever been caused by our sandblasting operations except to the person performing the sandblasting. Consequently, Section 24243, Chapter 2-Division 20 of the Health and Safety Code of the State of California is believed to be inapplicable. However, your decision as to whether a permit to operate is, or is not, necessary will be respected.

TORRANCE
SH-0007832

J. Levada
(min Jim Hodson – Please attach to J. Levada copy)

REQUEST TO APPLY FOR A.P.C.D. PERMIT

FIRM NAME Shell Chemical Corp TEL. Da. 3-8050

ADDRESS OF PREMISES 20021 So. Vermont Ave CITY Torrance SECTOR 19

DESCRIPTION OF EQUIPMENT Sand handling System consisting of; Pangborn Blast Cleaning Machine, Fixed type, 100 lb Cap Serial 1A411-413, with hose, nozzle, hopper & elevator & storage hopper.

THE AIR POLLUTION CONTROL REGULATIONS AUTHORIZED BY THE STATE OF CALIFORNIA HEALTH AND SAFETY CODE, REQUIRE THAT A PERMIT TO OPERATE EQUIPMENT THAT EMITS AIR CONTAMINANTS OR CONTROLS THE EMISSION OF AIR CONTAMINANTS, BE OBTAINED FROM THE AIR POLLUTION CONTROL OFFICER.

OPERATION OF THIS EQUIPMENT WITHOUT A PERMIT MAY BE A VIOLATION OF THE STATE HEALTH AND SAFETY CODE

YOU ARE HEREBY NOTIFIED TO APPLY FOR A PERMIT. FOR YOUR CONVENIENCE THE FOLLOWING LISTED FORMS ARE LEFT HEREWITH:

SET OF APPLICATIONS, FORM 400A [✓] PERMIT INFORMATION SHEET, FORM 400B [✓] PERMIT INSTRUCTION SHEET FORM 400C [✓]
FORM 400C [ ]

EXCERPTS FROM APCD RULES AND REGULATIONS ARE PRINTED ON BACK OF YELLOW "FILE COPY" OF FORM 400A

MAIL APPLICATION AND SUPPORTING DATA TO ATTENTION OF "ENGINEERING"
TO ARRIVE AT DISTRICT OFFICE BY Jan 30 19 61

AIR POLLUTION CONTROL DISTRICT—LOS ANGELES COUNTY

434 SOUTH SAN PEDRO STREET, LOS ANGELES 13, CALIFORNIA. MADISON 9-4711
L. H. MC EWEN - DIRECTOR OF ENFORCEMENT

THIS REQUEST GIVEN TO Art Martin SERVED BY Dave Cohran BADGE NUMBER 55

TITLE Eng DATE Jan 20 19 61

DATE DUE

TORRANCE
SH-0007833

COUNTY OF LOS ANGELES
TAX AND LICENSE COLLECTOR
HALL OF ADMINISTRATION
225 NORTH HILL STREET
CORNER OF TEMPLE AND HILL STREETS
LOS ANGELES 12, CALIFORNIA

September 29, 1961

OCT 4 2 20 PM '61

Shell Oil Company
P. O. Box 211
Torrance, California

Re: [redacted]

Gentlemen:

Los Angeles County Ordinance Number 5860 provides that anyone wishing to renew an existing dump license must make application to this office for said renewal, a minimum of 45 days prior to the expiration date of their current license.

Our records indicate that your current license, covering the above subject location, expires December 31, 1961. If you are desirous of filing an application for the renewal of this license, please complete the enclosed forms and return them to this office in duplicate together with your remittance in the amount of $125.00 prior to the 15th day of November 1961. Applications received after the 15th day of November 1961, must be, per Ordinance requirements, treated as new applications, therefore, requiring a fee in the amount of $150.00. We would, therefore, suggest a prompt remittance.

Sincerely yours,

H. L. BYRAM
County Tax Collector

C. N. Olsen

C. N. Olsen, Chief
License Division

CNO:jd

Enclosures

cc: County Engineer
Industrial Waste Division

APPROVED FOR FILE

TORRANCE
SP-0013234

LICENSE COLLECTOR
COUNTY OF LOS ANGELES

FEE . . . . . $_____
PENALTY (if any) _____
TOTAL TO REMIT $_____

APPLICATION FOR BUSINESS LICENSE

KIND OF BUSINESS Private - Industrial Waste Disposal Facilities Tel. No. FAculty 1-2340

ADDRESS OF BUSINESS North side of Knox Street between Main and Moneta
NUMBER STREET CITY ZONE

NEAREST CROSS STREET - - -

FULL NAME OF APPLICANT Shell Oil Company
(STATE WHETHER CORPORATION, PARTNERSHIP, INDIVIDUAL OR OTHER STATUS)

DOING BUSINESS AS Shell Chemical Company

IF A CORPORATION, EXACT CORPORATE NAME IS Shell Oil Company

Date of Incorporation February 8, 1922 Incorporated in State of Delaware

NAMES OF OFFICERS	ADDRESSES	TITLES
S. F. Bowlby	1008 W. Sixth St., Los Angeles 54	Vice President
H. M. Gullickson	1008 W. Sixth St., Los Angeles 54	Asst. Secretary

Underline Above Officer Authorized To Accept Service of Legal Process.

IF A PARTNERSHIP, SHOW BELOW THE NAMES OF PARTNERS, ADDRESSES, & INTEREST HELD

NAMES OF PARTNERS	ADDRESSES	% INTEREST HELD
- - -		

MAILING ADDRESS P. O. Box 211 Torrance, California
STREET CITY ZONE

DATE BUSINESS STARTED Under applicant, January 1, 1960; Under previous owner, April 25, 1955

PREVIOUS OWNER'S NAME, (IF KNOWN) Shell Chemical Corporation

THIS IS AN APPLICATION FOR: NEW LICENSE _____ RENEWAL X

APPLICANT MUST WITHIN FIVE DAYS THEREAFTER NOTIFY THIS OFFICE IN WRITING OF ANY CHANGE IN ANY FACTS REQUIRED BY THIS APPLICATION.

The information contained herein is true and correct to the best of my knowledge and belief. As a condition for the issuance of the license applied for, I agree; to submit any additional information that may be required; to conduct all phases of this business in accordance with regulations established for such business and to maintain all trucks or equipment that may be used in connection therewith, in conformance with all applicable laws, ordinances, and regulations.

Date October 9, 1961 Applicant's Signature SHELL CHEMICAL COMPANY, a Division of SHELL OIL COMPANY

By: G. W. Williamson
Plant Manager

BELOW FOR OFFICE USE ONLY

TORRANCE
SP-0013235

Bond _____ Insurance _____ Zoning _____ By _____ APPROVED FOR FILE

All applicants for a Dump, Waste Disposal Facility, Hog Ranch, or a Waste Haulers and/or Collectors license must also fill out the following:

If a corporation, give name and address of every stockholder owning not less than 10% of the stock.

NAME	ADDRESS
J. P. Morgan & Co. Incorporated as Trustee	c/o Morgan Guarantee Trust Co.
under the indenture dated as of	140 Broadway; New York, New York
October 1, 1948, made by Shell Caribbean	
Petroleum Company	

List every person having an interest of not less than 10% in the business or activity to be licensed and the amount thereof.

NAME	ADDRESS	% INTEREST HELD
Applicant only		

List every person having any right, title, or interest in the premises, or any part thereof, upon which the business or activity is to be carried on. If any such person is a corporation, give same information as required of a corporate applicant.

NAME	ADDRESS
Applicant only	

Give description of trucks and other mechanical equipment owned by or under control of the applicant.

MAKE	CAPACITY	VEHICLE LICENSE NUMBER	PROPOSED USE
1955 International	1-1/2 Ton Dump Truck	E-92713	hauling fill and
1953 White Dempster	2 Ton Truck	E-92740	debris from our plant
			at 19821 S. Figueroa
			to this dump.

Description of the waste disposal facility or dump proposed to be provided, including its location and a schedule of charges proposed to be made.

Lot 115 of Tract 4671

Dump will be used solely by applicant.

TORRANCE
SF-0013236

SFUND RECORDS CTR
2053524

TAX COLLECTOR'S OFFICE
HALL OF ADMINISTRATION
320 NORTH HILL STREET
CORNER OF TEMPLE AND HILL STREETS
LOS ANGELES 12, CALIFORNIA

September 29, 1961

Shell Oil Company
P. O. Box 211
Torrance, California

Re: Dump - Knox, between Main and Moneta

Gentlemen:

Los Angeles County Ordinance Number 5860 provides that anyone wishing to renew an existing dump license must make application to this office for said renewal, a minimum of 45 days prior to the expiration date of their current license.

Our records indicate that your current license, covering the above subject location, expires December 31, 1961. If you are desirous of filing an application for the renewal of this license, please complete the enclosed forms and return them to this office in duplicate together with your remittance in the amount of $125.00 prior to the 15th day of November 1961. Applications received after the 15th day of November 1961, must be, per Ordinance requirements, treated as new applications, therefore, requiring a fee in the amount of $150.00. We would, therefore, suggest a prompt remittance.

Sincerely yours,

H. L. BYRAM
County Tax Collector

C. N. Olsen, Chief
License Division

CNO:jd

Enclosures

cc: County Engineer
Industrial Waste Division

DUPLICATE DOCUMENT
Do not send to Records Center

APPROVED FOR FILE

TORRANCE
SF-0013234

SC 1003 (Rev. 1/60)—Printed in U.S.A.

REFERENCE

SHELL CHEMICAL COMPANY

DATE OCTOBER 9, 1961

TO LOS ANGELES - AREA LAND -
MR. C. K. ALBRIGHT

FROM TREASURY MANAGER -
TORRANCE PLANT

SUBJECT PRIVATE DUMP
LICENSE RENEWAL
Shell Chemical Division

Attached are Application for Business License and our check No. 49320 1006 in the amount of $125.00 covering the private dump license renewal for the year 1962, which we shall appreciate your handling with the Los Angeles County office.

J. D. Morton

J. D. Morton

Attachments (2)

APPROVED FOR
FILE

TORRANCE
SP-0013232

SF 1003 (Rev. 1/60)—Printed in U.S.A.

REFERENCE

SHELL CHEMICAL COMPANY

SFUND RECORDS CTR
2053523

DATE OCTOBER 9, 1961

TO LOS ANGELES - AREA LAND -
MR. C. K. ALBRIGHT

FROM TREASURY MANAGER -
TORRANCE PLANT

SUBJECT PRIVATE DUMP
LICENSE RENEWAL
Shell Chemical Division

Attached are Application for Business License and our check No. 49320 1006 in the amount of $125.00 covering the private dump license renewal for the year 1962, which we shall appreciate your handling with the Los Angeles County office.

J. D. Morton

J. D. Morton

Attachments (2)

DUPLICATE DOCUMENT
Do not send to Records Center

APPROVED FOR
FILE

TORRANCE
SF-0013232

FEE $
PENALTY (If any) $
TOTAL TO REMIT $

APPLICATION FOR
BUSINESS LICENSE

KIND OF BUSINESS Private - Industrial Waste Disposal Facilities Tel. No. FAculty 1-2340

ADDRESS OF BUSINESS North side of Knox Street between Main and Moneta
NUMBER STREET CITY ZONE

NEAREST CROSS STREET

FULL NAME OF APPLICANT Shell Oil Company
(STATE WHETHER CORPORATION, PARTNERSHIP, INDIVIDUAL OR OTHER STATUS)

DOING BUSINESS AS Shell Chemical Company

IF A CORPORATION, EXACT CORPORATE NAME IS Shell Oil Company

Date of Incorporation February 8, 1922 Incorporated in State of Delaware

NAMES OF OFFICERS	ADDRESSES	TITLES
S. F. Bowlby	1008 W. Sixth St., Los Angeles 54	Vice President
H. W. Gullickson	1008 W. Sixth St., Los Angeles 54	Asst. Secretary

Underline Above Officer Authorized To Accept Service of Legal Process.

IF A PARTNERSHIP, SHOW BELOW THE NAMES OF PARTNERS, ADDRESSES, & INTEREST HELD

NAMES OF PARTNERS	ADDRESSES	% INTEREST HELD

MAILING ADDRESS P. O. Box 211 Torrance, California
STREET CITY ZONE

DATE BUSINESS STARTED Under applicant, January 1, 1960; Under previous owner, April 25, 1955

PREVIOUS OWNER'S NAME, (IF KNOWN) Shell Chemical Corporation

THIS IS AN APPLICATION FOR: NEW LICENSE RENEWAL X

APPLICANT MUST WITHIN FIVE DAYS THEREAFTER NOTIFY THIS OFFICE IN WRITING OF ANY CHANGE IN ANY FACTS REQUIRED BY THIS APPLICATION.

The information contained herein is true and correct to the best of my knowledge and belief. As a condition for the issuance of the license applied for, I agree; to submit any additional information that may be required; to conduct all phases of this business in accordance with regulations established for such business and to maintain all trucks or equipment that may be used in connection therewith, in conformance with all applicable laws, ordinances, and regulations.

Date October 9, 1961 Applicant's Signature SHELL CHEMICAL COMPANY, a Division of SHELL OIL COMPANY

By: [signature]
Plant Manager

BELOW FOR OFFICE USE ONLY

TORRANCE
SF-0013235

By APPROVED FOR

JDM

OCTOBER 11, 1961

SHELL CHEMICAL DIVISION
TORRANCE PLANT

PACIFIC COAST AREA LAND

SHELL CHEMICAL DIVISION
PRIVATE DUMP SITE

Reference is made to your memorandum dated October 9, 1961 relative to the captioned item.

Attached for your information and file is Los Angeles County Tax Collector's receipt No. 53429 for the $125.00 fee deposited at the time of filing the application for renewal of the Permit on October 10, 1961.

C. A. ALBRIGHT

MMP:FAM

Enclosure

APPROVED FOR FILE

TORRANCE
SP-0013230

Cash [ ] Check [X] Cashier Check [ ] M.O. [ ] Post Note [ ]

H. L. BYRAM—TAX and LICENSE COLLECTOR—Los Angeles, Calif.

53429

LICENSE FEE DEPOSIT

Received from Shell Oil Company $ 125.00

Address Knox Between Main & White City Torrance

Fee to be deposited in Tax Collector's Trust Fund, pending approval of the application for

Type of Bill Dump Date 12/31/62

(Instructions of Processing)

[ ] Apply to — Post License No. [illegible]

[ ] Apply to — Investigation Costs

[ ] Apply to — Refund to Applicant

APPLICANT'S RECEIPT

Date 10-10-61

NOTICE: (Where application is denied, a portion of the above amount will be retained by the Tax Collector to reimburse the County for the cost of inspection. The balance is subject to refund to the applicant.)

THIS IS NOT A LICENSE and authority to operate a business is NOT granted by this license fee deposit.

APPROVED FOR FILE

TORRANCE
SP-0013231

525

March 29, 1962

U. S. Atomic Energy Commission
Division of Licensing and Regulation
Isotopes Branch
1717 "H" Street, N. W.
Washington 25, D.C.

Gentlemen:

Subject: Shell Chemical Byproduct Material
Licenses 4-1880-1 thru 5.

Enclosed are application forms to amend the Shell Chemical-Torrance Plant Byproduct Material License 4-1880-4 (I-64) Amendment No.8. This amendment will permit the Torrance plant to use one additional 1000 millicurie source of Cesium 137 for research purposes. This radioactive material will be contained in an Ohmart Model ASR-25-3 source holder.

In reference to your March 8, 1962 letter concerning your inspection conducted on October 19, 1961 at the Shell Chemical-Torrance plant, we submit the following in regard to Items 2, 3 and 4 in your letter:

a. Item 2 - License Condition No.16

In regard to license condition No.16, we are under the assumption that our Radiation Protection Officer, because of his training and our Byproduct Material License, has the authority to perform new installations, relocate existing units and supervise maintenance (excluding the actual source) of radioactive source holders. In the course of plant operations and alterations, we find it necessary to install and relocate radioactive source holders and perform maintenance on associated equipment other than the actual radiation source itself. Since we are specifically licensed there appears to be a question in regard to our authorization to perform such service. We would appreciate your informing us of the proper interpretation of condition No.16 in our license.

b. Item 3 - Records of Initial Radiation Surveys

Dr. Gordon L. Locher of the Western Radiation Laboratory, Los Angeles will perform a complete survey of all radioactive material sources in the Torrance plant for record purposes on April 9, 1962.

TORRANCE
SN-0014895

c. Item 4 - Posting of Caution Signs, Labels and Signals

At the Torrance plant, all signs and labels are normally masked before adjacent equipment is painted. Cleaning and unmasking some of the signs and labels associated with our radioactive sources were recently overlooked. Last October all signs and labels were restored in accordance with A.E.C. regulations. Our Radiation Protection Officer now makes a monthly inspection of all radioactive signs and labels to see that they are clean and visible.

Please forward us several copies of Form A.E.C. 313 "Application for Byproduct Material License" for future use.

Very truly yours,

Original Signed by G. S. Williamson

G. S. Williamson
Plant Manager

WCT:bet

Attachments

bc: W. C. Towner
Engr. File 602-1E
Engr. File 601-2E
Central Files Copy To

TORRANCE
SN-0014896

Form AEC-313
(5-58)

ATOMIC ENERGY COMMISSION

APPLICATION FOR BYPRODUCT MATERIAL LICENSE

Form approved
Budget Bureau No. 38-R027.4

INSTRUCTIONS.—*Complete Items 1 through 16 if this is an initial application. If application is for renewal of a license, complete only Items 1 through 7 and indicate new information or changes in the program as requested in Items 8 through 15. Use supplemental sheets where necessary. Item 16 must be completed on all applications. Mail three copies to: U. S. Atomic Energy Commission, Washington 25, D. C. Attention: Isotopes Branch, Division of Licensing and Regulation.* Upon approval of this application, the applicant will receive an AEC Byproduct Material License. An AEC Byproduct Material License is issued in accordance with the general requirements contained in Title 10, Code of Federal Regulations, Part 30 and the Licensee is subject to Title 10, Code of Federal Regulations, Part 20.

1. (a) NAME AND STREET ADDRESS OF APPLICANT. *(Institution, firm, hospital, person, etc.)*

Shell Chemical Company
A Division of Shell Oil Company
19621 South Figueroa Street
Torrance, California

(b) STREET ADDRESS(ES) AT WHICH BYPRODUCT MATERIAL WILL BE USED. *(If different from 1 (a).)*

19621 South Figueroa Street
Los Angeles, California

(not for mail)

2. DEPARTMENT TO USE BYPRODUCT MATERIAL

Research Pilot Plant

(not for mail)

3. PREVIOUS LICENSE NUMBER(S). *(If this is an application for renewal of a license, please indicate and give number.)*

4-1800-1 thru 5

4. INDIVIDUAL USER(S). *(Name and title of individual(s) who will use or directly supervise use of byproduct material. Give training and experience in Items 8 and 9.)*

W. C. Towner

Senior Engineer - Instrumentation

5. RADIATION PROTECTION OFFICER *(Name of person designated as radiation protection officer if other than individual user. Attach resume of his training and experience as in Items 8 and 9.)*

W. C. Towner

Resume of training attached.

6. (a) BYPRODUCT MATERIAL. *(Elements and mass number of each.)*

Cesium 137

(b) CHEMICAL AND/OR PHYSICAL FORM AND MAXIMUM NUMBER OF MILLICURIES OF EACH CHEMICAL AND/OR PHYSICAL FORM THAT YOU WILL POSSESS AT ANY ONE TIME. *(If sealed source(s), also state name of manufacturer, model number, number of sources and maximum activity per source.)*

One sealed source 1000 millicuries used in Ohmart Model ASR-25-3 source holder.

7. DESCRIBE PURPOSE FOR WHICH BYPRODUCT MATERIAL WILL BE USED. *(If byproduct material is for "human use," supplement A (Form AEC-313a) must be completed in lieu of this item. If byproduct material is in the form of a sealed source, include the make and model number of the storage container and/or device in which the source will be stored and/or used.)*

Measuring the density of latex and carbon slurry streams flowing in a pipe for research purposes. Source to be used and stored in an Ohmart Model ASR-25-3 source holder.

TORRANCE
SN-0014898

(Continued on reverse side)

Form AEC-313 (5-58) Page Two

TRAINING AND EXPERIENCE OF EACH INDIVIDUAL NAMED IN ITEM 4 *(Use supplemental sheets if necessary)*

8. TYPE OF TRAINING	WHERE TRAINED	DURATION OF TRAINING	ON THE JOB (Circle answer)	FORMAL COURSE (Circle answer)
a. Principles and practices of radiation protection	Course conducted by Dr. Gordon L. Locher of Western Radiation Laboratory, Los Angeles	3 days	(Yes) No	(Yes) No
b. Radioactivity measurement standardization and monitoring techniques and instruments			(Yes) No	(Yes) No
c. Mathematics and calculations basic to the use and measurement of radioactivity	Shell Chemical Company 19621 South Figueroa Street Torrance, California J. P. Marland - Research Dept.	1 day	(Yes) No	(Yes) No
d. Biological effects of radiation			(Yes) No	(Yes) No

9. EXPERIENCE WITH RADIATION. *(Actual use of radioisotopes or equivalent experience.)*

ISOTOPE	MAXIMUM AMOUNT	WHERE EXPERIENCE WAS GAINED	DURATION OF EXPERIENCE	TYPE OF USE
Cs-137	3000 Mc	19201 So. Vermont Avenue	6 months	Density measurement of Latex Stresses

10. RADIATION DETECTION INSTRUMENTS. *(Use supplemental sheets if necessary.)*

TYPE OF INSTRUMENTS (Include make and model number of each)	NUMBER AVAILABLE	RADIATION DETECTED	SENSITIVITY RANGE (mr/hr)	WINDOW THICKNESS (mg/cm²)	USE (Monitoring, surveying, measuring)
TracerLab SU-1H	1	Beta Gamma	0-1500		Monitoring and Surveying

11. METHOD, FREQUENCY, AND STANDARDS USED IN CALIBRATING INSTRUMENTS LISTED ABOVE.

Calibrated and serviced quarterly by R.C.A. Service Company, Van Nuys, California

12. FILM BADGES, DOSIMETERS, AND BIO-ASSAY PROCEDURES USED. *(For film badges, specify method of calibrating and processing, or name of supplier.)*

None required.

INFORMATION TO BE SUBMITTED ON ADDITIONAL SHEETS

13. FACILITIES AND EQUIPMENT. Describe laboratory facilities and remote handling equipment, storage containers, shielding, fume hoods, etc. Explanatory sketch of facility is attached. (Circle answer) Yes (No) See supplemental sheet

14. RADIATION PROTECTION PROGRAM. Describe the radiation protection program including control measures. If application covers sealed sources, submit leak testing procedures where applicable, name, training, and experience of person to perform leak tests, and arrangements for performing initial radiation survey, servicing, maintenance and repair of the source.

See supplemental sheet

15. WASTE DISPOSAL. If a commercial waste disposal service is employed, specify name of company. Otherwise, submit detailed description of methods which will be used for disposing of radioactive wastes and estimates of the type and amount of activity involved.

See supplemental sheet

CERTIFICATE (This item must be completed by applicant)

16. THE APPLICANT AND ANY OFFICIAL EXECUTING THIS CERTIFICATE ON BEHALF OF THE APPLICANT NAMED IN ITEM 1, CERTIFY THAT THIS APPLICATION IS PREPARED IN CONFORMITY WITH TITLE 10, CODE OF FEDERAL REGULATIONS, PART 30, AND THAT ALL INFORMATION CONTAINED HEREIN, INCLUDING ANY SUPPLEMENTS ATTACHED HERETO, IS TRUE AND CORRECT TO THE BEST OF OUR KNOWLEDGE AND BELIEF.

Shell Chemical Company
Applicant named in item 1

Date March 30, 1960

By: Original Signed by G. S. Williamson

TORRANCE
SN-0014897

G. S. Williamson, Plant Manager
Title of certifying official

WARNING.—18 U. S. C., Section 1001; Act of June 25, 1948; 62 Stat. 749; makes it a criminal offense to make a willfully false statement or representation to any department or agency of the United States as to any matter within its jurisdiction.

GPO-87 407 3

UNITED STATES
ATOMIC ENERGY COMMISSION
WASHINGTON 25, D.C.

IN REPLY REFER TO:
LR:RH

APR 30 1962

Shell Chemical Company
A Division of Shell Oil Company
P. O. Box 211
Torrance, California

Attention: Mr. G. S. Williamson, Plant Manager

Gentlemen:

Thank you for your letter of March 29, 1962, informing us of the steps taken by you to correct those deficiencies in your AEC licensed program which we brought to your attention in our letter of March 8, 1962.

Condition No. 16 of License No. 4-1880-4 requires that the installation, relocation, etc. of your Ohmart source holders shall be performed only by Ohmart Corporation or by persons specifically authorized by the Commission. Your company is not specifically licensed to perform this service. If you wish, you may submit an application requesting that your license be amended to include such authorization. Your application should list the names of the individuals who will perform this service, and should fully describe the training and experience of such individuals. We are enclosing several copies of Form AEC-313 for this purpose and as per your request.

The corrective action taken by you regarding the items described in our March 8 letter will be reviewed during the next inspection of your facilities.

Your cooperation with us is appreciated.

Very truly yours,

R E Cunningham

R. E. Cunningham, Chief
Enforcement Branch
Division of Licensing
and Regulation

TORRANCE PLT.
MAY 4 1962
MGR.
SUPT. MGRS.
STA.
RUTS.
POLY.
FIN.
SHIP.
SUPT. TECH.
LAB.
TREAS.
P & IR
Purch-Stores
RES.
CEN F.
PLS. HOL.
DATE ANS.
ANS. BY
FILE NO. 525

* Pls retain all [illegible]

TORRANCE
SN-0014894

MAY 4 12 53 PM '62

Central Files
525

July 6, 1962

U.S. Atomic Energy Commission
Division of Licensing and Regulation
Isotopes Branch
1717 "H" Street, N.W.
Washington 25, D.C.

Gentlemen:

Subject: Shell Chemical By-Product Material Licenses 4-1880-1 through 5.

We wish to advise you of a change in street name which appears on the subject licenses and to amend our licenses 4-1880-2, and 4-1880-4. In addition, one Ohmart Cesium 137 Source is to be returned to the manufacturer for examination, and the large Cobalt-60 unit used for research purposes, License 4-1880-5, is to be relocated.

I. Change in Street Name

As the result of freeway construction, a portion of Figueroa Street has been isolated and renamed Hamilton Street. Consequently, the address shown on the subject licenses should read:

Current address: 19821 Hamilton Street, Los Angeles
Old address: 19821 So. Figueroa Street, Los Angeles

Please note that the correct mailing address which applies to the above licenses is as follows:

Shell Chemical Company
A Division of Shell Oil Company
P. O. Box 211
Torrance, California
Attention: Radiation Safety Officer

II. Changes in List of Persons Authorized to Use or to Supervise Directly the Use of Carbon-14 - License No. 4-1880-2, Amendment No.3.

We request that Condition No.14 of License 4-1880-2, Amendment No.3, dated January 6, 1961, be further amended by adding the following names:

TORRANCE
SN-0014882

(1) James T. Harlan, Jr. - Radiation Laboratory Supervisor
(2) Donald H. Adams - Research Laboratory Assistant
(3) Richard M. Pymm - Chemist, Plant Laboratory

to those authorized to use or to supervise directly the use of the Carbon-14 by-product material covered by the license. The training and experience of these persons is presented in Attachment A.

In addition, the name of D. C. Duke who was listed in the original application should be removed, since he is no longer at the licensed location. The name of Vernon Bruns, shown in Amendment No.3 should remain. All other conditions of License No.4-1880-2, Amendment No.3 will remain in force.

III. Amendment to License No.4-1880-4

Enclosed are application forms requesting that license No.4-1880-4 be amended to specifically authorize our personnel, W. C. Towner and L. J. Notter to specifically perform the installation, relocation, etc. of the Ohmart source holders, as suggested in your April 30, 1962 letter.

IV. Reconditioning of 500 millicurie Cesium 137 Source

We are sending back one Ohmart 500 millicurie Cesium 137 Source to The Ohmart Corporation for examination and reconditioning. This source has shown activities of 0.0035 and 0.0015 microcuries from recent wipe tests. All the handling and shipment of the source will be accomplished by Ohmart personnel.

V. Relocation of Cobalt-60 Unit - License No.4-1880-5

Presently, actions are in progress to permanently transfer our 20,000 curie Cobalt-60 unit to Shell Development Company, Emeryville, California. Shipment is anticipated to occur during the first part of August. Your Region V, Division of Compliance, Berkeley, California has probably already received information from Shell Development Company in regards to this transfer. Upon completion of the transfer our License No.4-1880-5 will undoubtedly be cancelled. We shall continue to correspond with you on this subject as details become more finalized. In the meantime we would appreciate any advice that you may have which would assist us in carrying out the transactions.

Thank you for your assistance on the above subjects. These changes will improve our ability to apply radioisotope techniques and to maintain control of by-product material handling.

Yours very truly,

Original Signed by G. S. Williamson

WCT:bet

G. S. Williamson
Plant Manager

Attachments

TORRANCE
SN-0014883

cc: Director, Region V, Division of Compliance
U.S. Atomic Energy Commission
2111 Bancroft Way
Berkeley 4, California

Copy To

bc: NRL - JTH - JDM - EML - WCT - Engr.602-1E & 601-2E - Central Files

ATTACHMENT A

Personnel Training and Experience

I. James T. Harlan, Jr. - Radiation Laboratory Supervisor

A. General Technical Background
B.S. (Chemical Engineering) California Institute of Technology (1941) plus graduate work at various universities; 21 years experience in petrochemical manufacturing operations.

B. Training Related to Radiation Utilization and Safety
(1) University of California (Extension Division, Berkeley) Nuclear Short Course (9 weeks) July-August 1956.

(2) International School of Nuclear Science and Engineering University of North Carolina, Raleigh, N.C. (4 months) February-May 1957.
Argonne National Laboratory, Lemont, Illinois (5 months) June-November 1957.

(3) Special Scientific Employee, Chemistry Division Argonne National Laboratory, Lemont, Illinois (3 months) November 1957-February 1958.

(4) Course in Health Physics and Radiation Safety (presented by Nuclear Systems in Los Angeles) (2 days, part time) February 1959.

(5) Three-day course in radiation safety presented by Western Radiation Laboratory (see attached letter from Western Radiation Laboratory to Shell Chemical Co., dated November 11, 1961).

C. Actual Experience in Handling Radiation Sources

Source of Radiation	Description	Location	Duration	Use
Cobalt-60 Irrad.Unit	1500 curies	Argonne Natl.Lab.	5 mos.	Experimental
Fission products	Microcuries	" "	2 mos.	Training
Nuclear Reactors	Water Boiler	N.C.State Coll.	1 mo.	Training
	CP-5	Argonne Natl.Lab.	2 mos.	Training
	EBWR	" "	2 days	Training
	Argonaut	" "	1 mo.	Training
Van de Graaff Accelerator	3 Mev	Shell Devel. Co. Emeryville, Calif.	3 yrs.	Experimental
Cobalt-60 Irrad.Unit	18,600 curies	Shell Chem. Co. Torrance, Calif.	3 years	Experimental

TORRANCE
SN-0014884

Attachment A - continued

II. Donald H. Adams - Laboratory Assistant

A. Academic Training: B.S. (Animal Husbandry) Univ.of California (1956) 4 yrs. experience in synthetic rubber research laboratory.

B. Training in Radiation Safety:

(1) Course in Health Physics and Radiation Safety (presented by Nuclear Systems in Los Angeles (2 days) February 10-11, 1959.

(2) On-the-job training in radiation safety during 3 years working with 18,600 Cobalt-60 irradiation unit (Shell Chemical Corp., Torrance, California) under supervision of James T. Harlan, Jr.

(3) Three-day course in radiation safety presented by Western Radiation Laboratory (See item I B-5 above).

C. Actual Experience in Handling Radiation Sources

(1) Routine operation of 18,600 curie Cobalt-60 irradiation facility and responsibility for the safety of such operation under the supervision of James T. Harlan, Jr.(See License No.4-1880-5).

(2) Contact with Research Laboratory unsealed carbon-14 sources as observer.

III. Richard M. Pymm-Chemist - Plant Laboratory

A. General Technical Background

B.A. (Chemistry) Occidental College (1955); 7 years broad experience in laboratories at Shell Chemical Co., Torrance Plant.

B. Training Radiation Safety

(1) On-the-job training (approximately one month) in the use of unsealed Carbon-14 sources under the direction of Donald C. Duke, who was authorized under this license (Amendment No.2) to supervise such work.

(2) Three-day course in radiation safety presented by Western Radiation Laboratory (see item I B-5 above).

C. Actual Experience in Handling Radiation Sources

Millicurie Carbon-14 sources were handled during on-the-job training period in 1958.

TORRANCE
SN-0014885

C O P Y

Richmond 7-8355

WESTERN RADIATION LABORATORY

1107 West 24th Street

Los Angeles 7, California

November 11, 1961

Shell Chemical Company
P. O. Box 211
Torrance, California

Attn: Mr. G. S. Williamson, Plant Manager
Mr. N. R. Legge, Research Director

Subject: Report of completion of lecture course on radiation safety with sealed gamma sources up to 5 curies strength, with special reference to Cesium-137.

Gentlemen:

This letter is to report that seven of your personnel listed below have attended a three-day training course on radiation safety with sealed gamma sources. Each of the men has attended three full-day lectures and has passed a written examination given at the end of the course.

A copy of the outline of the lectures and a written discussion of the use of Cesium-137 sources are attached. The attached discussion represents a small portion of the lecture material. Each man was supplied with material listed at the end of the lecture outline, and with several other NBS handbooks.

A list of questions given each man for study, and from which twenty questions were selected for the examination, is enclosed. This is dated November 8, 1961. Questions used were: 1, 3, 8, 11, 12, 17, 21, 28, 29, 35, 42, 50, 52, 63, 66, 81, 84, 98 and 99, 101. The names of the men attending and their examination grades are as follows:

W. C. Towner	100%
Joe W. Adamic, Jr.	100%
Donald H. Adams	100%
Lawrence J. Notter, Jr.	100%
James T. Harlan, Jr.	100%
Richard M. Pyum	100%
Jack Underwood	85%

It is my understanding that Mr. Towner will be the new inspector for Shell Chemical Torrance Plant. Mr. Harlan attended the lectures, and was very helpful in steering discussions in directions of most use to your company. His assistance was greatly appreciated.

The lectures put a special stress on Cesium-137 sources, such as those now employed. The maximum strength per source was nominally set at 5 curies, on the possibility that you might use stronger sealed sources at some future time.

TORRANCE
SN-0014886

C O P Y

Richmond 7-8355

WESTERN RADIATION LABORATORY

1107 West 24th Street

Los Angeles 7, California

As shown by the high examination grades and by discussions during the lectures, all of these men evinced good understanding of the subject, and ability to read and understand the Code of Federal Regulations and supplementary material supplied.

Very truly yours,

Gordon L. Locher, Ph.D., owner
Western Radiation Laboratory
(Health Physicist, certified).

GLL:mv/bet

Enclosures

TORRANCE
SN-0014887

SAN PETTY

AIR POLLUTION CONTROL DISTRICT, COUNTY OF LOS ANGELES

434 South San Pedro Street Los Angeles 13, California MAdison 9-4711

September 25, 1962

A-15177

S - 01-8 Spec.

Shell Chemical Company
A Division of Shell Oil Company
P.O. Box 211
Torrance, California

Attention: Mr. G.S. Williamson, Plant Manager

Gentlemen:

WATER SCRUBBER SERVING BLOWDOWN SYSTEM OF UNIT 2200 ETHYLBENZENE PRODUCTION FACILITY. TO BE LOCATED AT 20021 SOUTH VERMONT AVENUE, LOS ANGELES, CALIFORNIA.

Please refer to your application for authority to construct and permit to operate the equipment described above.

It is the conclusion of our engineers, based on an evaluation of the plans and specifications submitted, that the proposed installation can be operated in compliance with the existing air pollution control regulations.

You are hereby granted authority to construct the equipment as shown on the approved plans and specifications. This authorization is not a permit to operate and does not guarantee that the operation of the proposed equipment will comply with air pollution control regulations. This authorization expires on SEPTEMBER 25, 1963, and your application will be automatically canceled unless a written request for a six month extension and a renewal fee of $10.00 is filed prior to the expiration date.

You are advised that you are required to familiarize yourself with all laws, ordinances and regulations of any governmental agency applicable to the installation and operation of the equipment for which this authority is issued and to comply therewith.

TORRANCE
SH-0007424

A.P. ANALYSIS • RESEARCH • ENGINEERING • ENFORCEMENT • INFORMATION

You are requested to telephone Mr. J.T. Marco at MAdison 9-4711, to notify this office when construction has been completed. An inspection will then be made to determine if the equipment has been constructed according to the approved plans. At that time the operations will be observed for compliance with the Rules and Regulations of the Air Pollution Control District.

After the final inspection has been made, you will be notified of the approval or denial of your application for permit to operate this equipment.

Very truly yours,

S. Smith Griswold
Air Pollution Control Officer

By R.J. MacKnight

R.J. MacKnight, Principal Engineer
Engineering Division

RJM:ed
Encl.

Shell Chemical Company, A Div.
of Shell Oil Company

September 25, 1962

A-15134

You are requested to telephone Mr. J.T. Nance at MAdison 9-4711, to notify this office when construction has been completed. An inspection will then be made to determine if the equipment has been constructed according to the approved plans. At that time the operations will be observed for compliance with the Rules and Regulations of the Air Pollution Control District.

After the final inspection has been made, you will be notified of the approval or denial of your application for permit to operate this equipment.

Very truly yours,

S. Smith Griswold
Air Pollution Control Officer

By R. J. MacKnight

R.J. MacKnight, Principal Engineer
Engineering Division

RJM:ed
Encl.

TORRANCE
SH-0007427

AIR POLLUTION CONTROL DISTRICT - COUNTY OF LOS ANGELES
434 SOUTH SAN PEDRO STREET, LOS ANGELES 13, CALIFORNIA. MADISON 9-4711

APPLICATION

John Petty

AUTHORITY TO CONSTRUCT AND PERMIT TO OPERATE

INSTRUCTIONS

A. A FILING FEE OF $10.00 MUST ACCOMPANY EACH APPLICATION. CHECKS OR MONEY ORDERS SHOULD BE MADE PAYABLE TO THE AIR POLLUTION CONTROL DISTRICT, COUNTY OF LOS ANGELES.

B. THIS APPLICATION MUST BE FILLED OUT COMPLETELY AND MUST BE FILED IN TRIPLICATE.

C. APPLICATIONS ARE INCOMPLETE UNLESS ACCOMPANIED BY DUPLICATE COPIES OF ALL PLANS, SPECIFICATIONS AND DRAWINGS REQUIRED. DETAILS REQUIRED FOR SPECIFIC EQUIPMENT ARE LISTED ON SEPARATE FORMS WHICH ARE AVAILABLE UPON REQUEST.

D. THIS APPLICATION MUST BE SIGNED BY A RESPONSIBLE MEMBER OF THE ORGANIZATION THAT IS TO OPERATE THE EQUIPMENT FOR WHICH APPLICATION IS MADE. INCOMPLETE APPLICATIONS ARE NOT ACCEPTABLE.

ENGINEERING DIVISION
ROBERT L. CHASS
DIRECTOR OF ENGINEERING

APPLICATION INFORMATION

1. PERMIT TO BE ISSUED TO (BUSINESS LICENSE NAME OF CORPORATION, COMPANY, INDIVIDUAL OWNER OR GOVERNMENTAL AGENCY THAT IS TO OPERATE THE EQUIPMENT): Shell Chemical Co., A Division of Shell Oil Co.

2. MAILING ADDRESS:

NUMBER P.O. Box 211 STREET CITY OR COMMUNITY Torrance, Calif. ZONE

3. ADDRESS AT WHICH THE EQUIPMENT IS TO BE OPERATED:

NUMBER 20021 STREET S. Vermont CITY OR COMMUNITY Los Angeles ZONE

4. TYPE OF ORGANIZATION: CORPORATION [X] PARTNERSHIP [ ] INDIVIDUAL OWNER [ ] GOVERNMENTAL AGENCY [ ]

5. GENERAL NATURE OF BUSINESS: Manufacture of synthetic rubber

6. EQUIPMENT DESCRIPTION. PURSUANT TO THE PROVISIONS OF THE STATE HEALTH AND SAFETY CODE AND THE RULES AND REGULATIONS OF THE AIR POLLUTION CONTROL DISTRICT, APPLICATION IS HEREBY MADE FOR AUTHORITY TO CONSTRUCT AND PERMIT TO OPERATE THE FOLLOWING EQUIPMENT: Alter 2200 Ethylbenzene Production Facilities (as described by Permit 19511) by addition of Water Scrubber serving emergency Blowdown Vessel V-2227.

7. ESTIMATED COST OF EQUIPMENT OR OF ALTERATION: AIR POLLUTION CONTROL EQUIPMENT: $ 4,150 BASIC EQUIPMENT: $

8. PRESENT STATUS OF EQUIPMENT (CHECK AND COMPLETE APPLICABLE ITEMS):

		ESTIMATE STARTING DATE	ESTIMATE COMPLETION DATE
[X]	CONSTRUCTION OR INSTALLATION NOT STARTED.	10-1-62	12-1-62
[ ]	CONSTRUCTION OR INSTALLATION PARTLY COMPLETED.		
[ ]	CONSTRUCTION COMPLETED.		
[ ]	EQUIPMENT IS TO BE ALTERED.		
[ ]	EQUIPMENT IS PARTLY ALTERED.		
[ ]	EQUIPMENT HAS BEEN ALTERED.		
[ ]	TRANSFER OF OPERATOR, OWNER OR LESSEE.		
[ ]	TRANSFER OF LOCATION.		

9. IF THIS EQUIPMENT HAD A PREVIOUS WRITTEN PERMIT GIVE NAME OF CORPORATION, COMPANY OR INDIVIDUAL OWNER THAT OPERATED THIS EQUIPMENT AND STATE PREVIOUS AIR POLLUTION CONTROL DISTRICT PERMIT NUMBER, IF KNOWN.

NAME PERMIT NUMBER 19511

10. SIGNATURE OF RESPONSIBLE MEMBER OF FIRM: →

DATE OF APPLICATION:

11. TYPE OR PRINT NAME AND OFFICIAL TITLE OF PERSON SIGNING THIS APPLICATION.

NAME G. S. Williamson

TITLE Plant Manager

PHONE NUMBER FA 1-2340

ADDENDUM TO PREVIOUS APPLICATION COVERING 1200 AND 2200 AREAS. SEPARATE PERMIT ALTERATIONS REQUIRE SEPARATE APPLICATIONS.

VALIDATION (A.P.C.D. USE ONLY)

16-5005 R9-60-1

TORRANCE
SH-0007428

400-A

AIR POLLUTION CONTROL DISTRICT - COUNTY OF LOS ANGELES
434 SOUTH SAN PEDRO STREET, LOS ANGELES 13, CALIFORNIA. MADISON 9-4711

APPLICATION

JOHN PETTY

AUTHORITY TO CONSTRUCT AND PERMIT TO OPERATE

INSTRUCTIONS

A. A FILING FEE OF $10.00 MUST ACCOMPANY EACH APPLICATION. CHECKS OR MONEY ORDERS SHOULD BE MADE PAYABLE TO THE AIR POLLUTION CONTROL DISTRICT, COUNTY OF LOS ANGELES.

B. THIS APPLICATION MUST BE FILLED OUT COMPLETELY AND MUST BE FILED IN TRIPLICATE.

C. APPLICATIONS ARE INCOMPLETE UNLESS ACCOMPANIED BY DUPLICATE COPIES OF ALL PLANS, SPECIFICATIONS AND DRAWINGS REQUIRED. DETAILS REQUIRED FOR SPECIFIC EQUIPMENT ARE LISTED ON SEPARATE FORMS WHICH ARE AVAILABLE UPON REQUEST.

D. THIS APPLICATION MUST BE SIGNED BY A RESPONSIBLE MEMBER OF THE ORGANIZATION THAT IS TO OPERATE THE EQUIPMENT FOR WHICH APPLICATION IS MADE. INCOMPLETE APPLICATIONS ARE NOT ACCEPTABLE.

ENGINEERING DIVISION
ROBERT L. CHASS
DIRECTOR OF ENGINEERING

APPLICATION INFORMATION

1. PERMIT TO BE ISSUED TO (BUSINESS LICENSE NAME OF CORPORATION, COMPANY, INDIVIDUAL OWNER OR GOVERNMENTAL AGENCY THAT IS TO OPERATE THE EQUIPMENT): Shell Chemical Co., A Division of Shell Oil Co.

2. MAILING ADDRESS:
NUMBER P.O. Box 811 STREET Torrance, Calif. CITY OR COMMUNITY ZONE

3. ADDRESS AT WHICH THE EQUIPMENT IS TO BE OPERATED:
NUMBER 2901 STREET Vermont CITY OR COMMUNITY Los Angeles ZONE

4. TYPE OF ORGANIZATION: CORPORATION [X] PARTNERSHIP [ ] INDIVIDUAL OWNER [ ] GOVERNMENTAL AGENCY [ ]

5. GENERAL NATURE OF BUSINESS: Manufacture of Synthetic Rubber

6. EQUIPMENT DESCRIPTION. PURSUANT TO THE PROVISIONS OF THE STATE HEALTH AND SAFETY CODE AND THE RULES AND REGULATIONS OF THE AIR POLLUTION CONTROL DISTRICT, APPLICATION IS HEREBY MADE FOR AUTHORITY TO CONSTRUCT AND PERMIT TO OPERATE THE FOLLOWING EQUIPMENT: After 1200 and 2000 ethylbenzene production facilities (as described by permits 19510 and 19511) by addition of water scrubbers serving emergency blowdown vessels V-1227 and V-2227.

7. ESTIMATED COST OF EQUIPMENT OR OF ALTERATION: AIR POLLUTION CONTROL EQUIPMENT: $ BASIC EQUIPMENT: $

8. PRESENT STATUS OF EQUIPMENT (CHECK AND COMPLETE APPLICABLE ITEMS):

		ESTIMATE STARTING DATE	ESTIMATE COMPLETION DATE
[X]	CONSTRUCTION OR INSTALLATION NOT STARTED.	10-1-62	12-1-62
[ ]	CONSTRUCTION OR INSTALLATION PARTLY COMPLETED.		
[ ]	CONSTRUCTION COMPLETED.		
[ ]	EQUIPMENT IS TO BE ALTERED.		
[ ]	EQUIPMENT IS PARTLY ALTERED.		
[ ]	EQUIPMENT HAS BEEN ALTERED.		
[ ]	TRANSFER OF OPERATOR, OWNER OR LESSEE.		
[ ]	TRANSFER OF LOCATION.		

9. IF THIS EQUIPMENT HAD A PREVIOUS WRITTEN PERMIT GIVE NAME OF CORPORATION, COMPANY OR INDIVIDUAL OWNER THAT OPERATED THIS EQUIPMENT AND STATE PREVIOUS AIR POLLUTION CONTROL DISTRICT PERMIT NUMBER, IF KNOWN.
NAME PERMIT NUMBER 19510 19511

10. SIGNATURE OF RESPONSIBLE MEMBER OF FIRM: → *Original Signed by G. S. Williamson*
DATE OF APPLICATION:

11. TYPE OR PRINT NAME AND OFFICIAL TITLE OF PERSON SIGNING THIS APPLICATION.
NAME G. S. Williamson
TITLE Plant Manager
PHONE NUMBER PA 1-2540

A-

VALIDATION (A.P.C.D. USE ONLY)

TORRANCE
SH-0007429

16-50D5 R9-60-1 400-A

JOB DESCRIPTION

The ethylbenzene production facilities at the 1200 and 2200 areas will be altered by the installation of water scrubbers on the vents of emergency blowdown vessels V-1227 and V-2227.

Operation of the scrubbers will preclude the emission of hydrochloric acid vapors to the atmosphere in the event of discharge of relief devices to the blowdown vessels under emergency conditions. In addition, the water quench will serve to condense the vapors of higher boiling hydrocarbons discharged to the blowdown vessels under similar conditions.

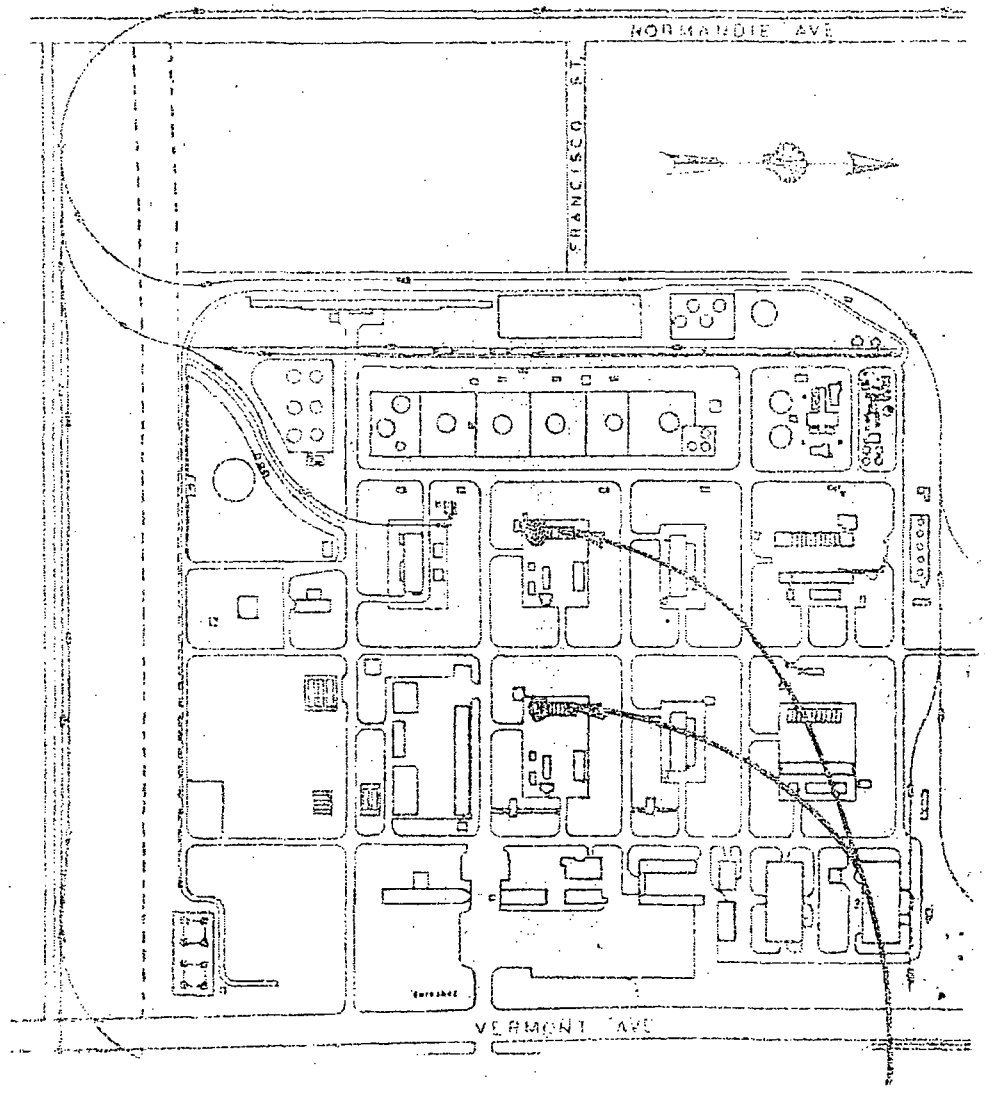

2001 SOUTH VERMONT ST.

LOCATION 36

NEW EQUIPMENT

TORRANCE
SH-0007431

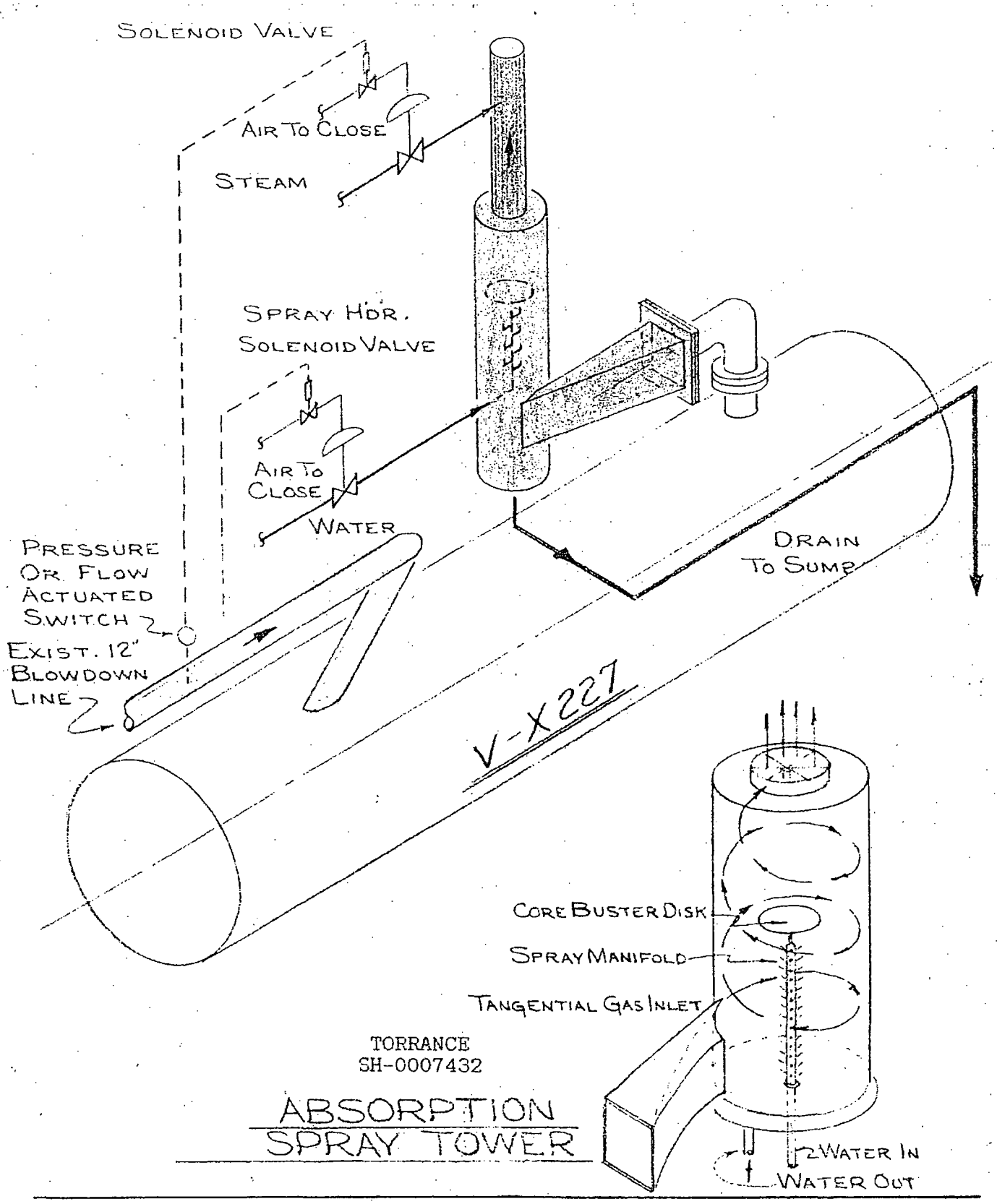

TORRANCE
SH-0007432

ABSORPTION
SPRAY TOWER

STYRENE - X200 SHELL CHEMICAL CORPORATION
TORRANCE PLANT

JOB TITLE SPRAY TOWER ON BLOWDOWN VESSEL VENT.

DATE 5-17-60 DRAWN BY W.P. FLANNERY

JOB NUMBER APPROVED BY SS 60-4528

AIR POLLUTION CONTROL DISTRICT · COUNTY OF LOS ANGELES
434 SOUTH SAN P[illegible]O STREET, LOS ANGELES 13, CALI[illegible]NIA. MADISON 9-4711

APPLICATION

JOHN PETTY

AUTHORITY TO CONSTRUCT AND PERMIT TO OPERATE

INSTRUCTIONS

A. A FILING FEE OF $10.00 MUST ACCOMPANY EACH APPLICATION. CHECKS OR MONEY ORDERS SHOULD BE MADE PAYABLE TO THE AIR POLLUTION CONTROL DISTRICT, COUNTY OF LOS ANGELES.

B. THIS APPLICATION MUST BE FILLED OUT COMPLETELY AND MUST BE FILED IN TRIPLICATE.

C. APPLICATIONS ARE INCOMPLETE UNLESS ACCOMPANIED BY DUPLICATE COPIES OF ALL PLANS, SPECIFICATIONS AND DRAWINGS REQUIRED. DETAILS REQUIRED FOR SPECIFIC EQUIPMENT ARE LISTED ON SEPARATE FORMS WHICH ARE AVAILABLE UPON REQUEST.

D. THIS APPLICATION MUST BE SIGNED BY A RESPONSIBLE MEMBER OF THE ORGANIZATION THAT IS TO OPERATE THE EQUIPMENT FOR WHICH APPLICATION IS MADE. INCOMPLETE APPLICATIONS ARE NOT ACCEPTABLE.

ENGINEERING DIVISION
ROBERT L. CHASS
DIRECTOR OF ENGINEERING

APPLICATION INFORMATION

1. PERMIT TO BE ISSUED TO (BUSINESS LICENSE NAME OF CORPORATION, COMPANY, INDIVIDUAL OWNER OR GOVERNMENTAL AGENCY THAT IS TO OPERATE THE EQUIPMENT): Shell Chemical Co., a Division of Shell Oil Co.

2. MAILING ADDRESS: P.O. Box 211 (STREET) Torrance, Calif. (CITY OR COMMUNITY) (NUMBER) (ZONE)

3. ADDRESS AT WHICH THE EQUIPMENT IS TO BE OPERATED: 20021 So. Vermont (NUMBER, STREET) Los Angeles, Calif. (CITY OR COMMUNITY) (ZONE)

4. TYPE OF ORGANIZATION: CORPORATION [X] PARTNERSHIP [ ] INDIVIDUAL OWNER [ ] GOVERNMENTAL AGENCY [ ]

5. GENERAL NATURE OF BUSINESS: Manufacture of Synthetic Rubber

6. EQUIPMENT DESCRIPTION. PURSUANT TO THE PROVISIONS OF THE STATE HEALTH AND SAFETY CODE AND THE RULES AND REGULATIONS OF THE AIR POLLUTION CONTROL DISTRICT, APPLICATION IS HEREBY MADE FOR AUTHORITY TO CONSTRUCT AND PERMIT TO OPERATE THE FOLLOWING EQUIPMENT: Knockout vessel in ethylene vent system serving ethylbenzene units 1200 and 2200 (Permit 42573). Transfer pump for recovered liquid to 1200 area process (Permit 19510).

7. ESTIMATED COST OF EQUIPMENT OR OF ALTERATION: AIR POLLUTION CONTROL EQUIPMENT: $ -- BASIC EQUIPMENT: $3,500

8. PRESENT STATUS OF EQUIPMENT (CHECK AND COMPLETE APPLICABLE ITEMS):

		ESTIMATE STARTING DATE	ESTIMATE COMPLETION DATE
[X]	CONSTRUCTION OR INSTALLATION NOT STARTED.	10-1-62	12-1-62
[ ]	CONSTRUCTION OR INSTALLATION PARTLY COMPLETED.		
[ ]	CONSTRUCTION COMPLETED.		
[ ]	EQUIPMENT IS TO BE ALTERED.		
[ ]	EQUIPMENT IS PARTLY ALTERED.		
[ ]	EQUIPMENT HAS BEEN ALTERED.		
[ ]	TRANSFER OF OPERATOR, OWNER OR LESSEE.		
[ ]	TRANSFER OF LOCATION.		

9. IF THIS EQUIPMENT HAD A PREVIOUS WRITTEN PERMIT GIVE NAME OF CORPORATION, COMPANY OR INDIVIDUAL OWNER THAT OPERATED THIS EQUIPMENT AND STATE PREVIOUS AIR POLLUTION CONTROL DISTRICT PERMIT NUMBER, IF KNOWN.

NAME PERMIT NUMBER

10. SIGNATURE OF RESPONSIBLE MEMBER OF FIRM: → Original Signed by G. S. Williamson

DATE OF APPLICATION:

11. TYPE OR PRINT NAME AND OFFICIAL TITLE OF PERSON SIGNING THIS APPLICATION.

NAME G. S. Williamson

TITLE Plant Manager

PHONE NUMBER ~~FA 1-2340~~ FA 1-2340

A-

VALIDATION (A.P.C.D. USE ONLY)

TORRANCE
SH-0007433

16-50D5 R9-60-1 400-A

JOB DESCRIPTION

The ethylene vent system from the ethylbenzene units 1200 and 2200 to the steam plant will be altered by the addition of a knockout vessel (to be located in the 1200 area) for the removal of entrained liquid.

A 1/2-hp gear pump with mechanical seal will be installed to transfer recovered liquid to complex settling tanks V-1221A or V-1221B.

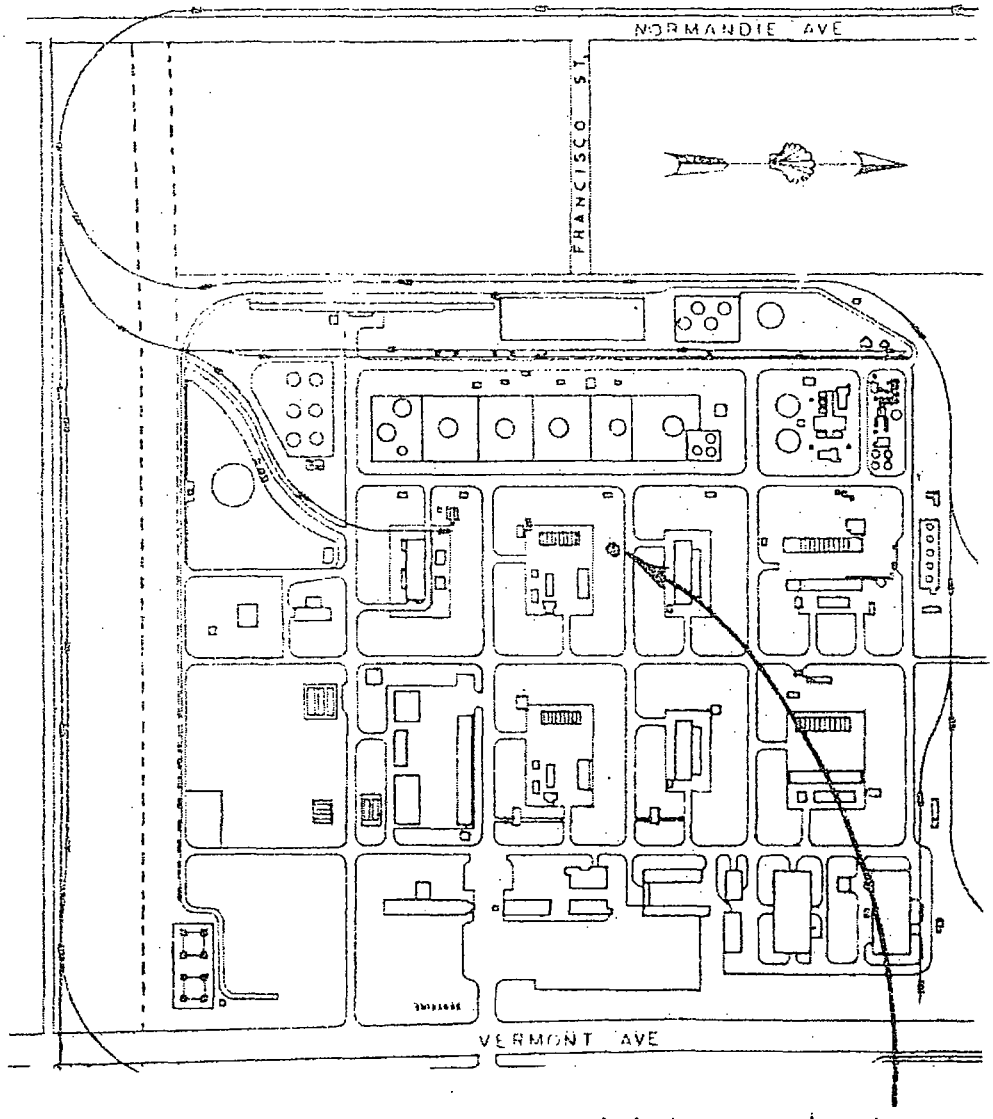

20021 SOUTH VERMONT ST.

LOCATION OF NEW EQUIPMENT

TORRANCE
SH-0007435

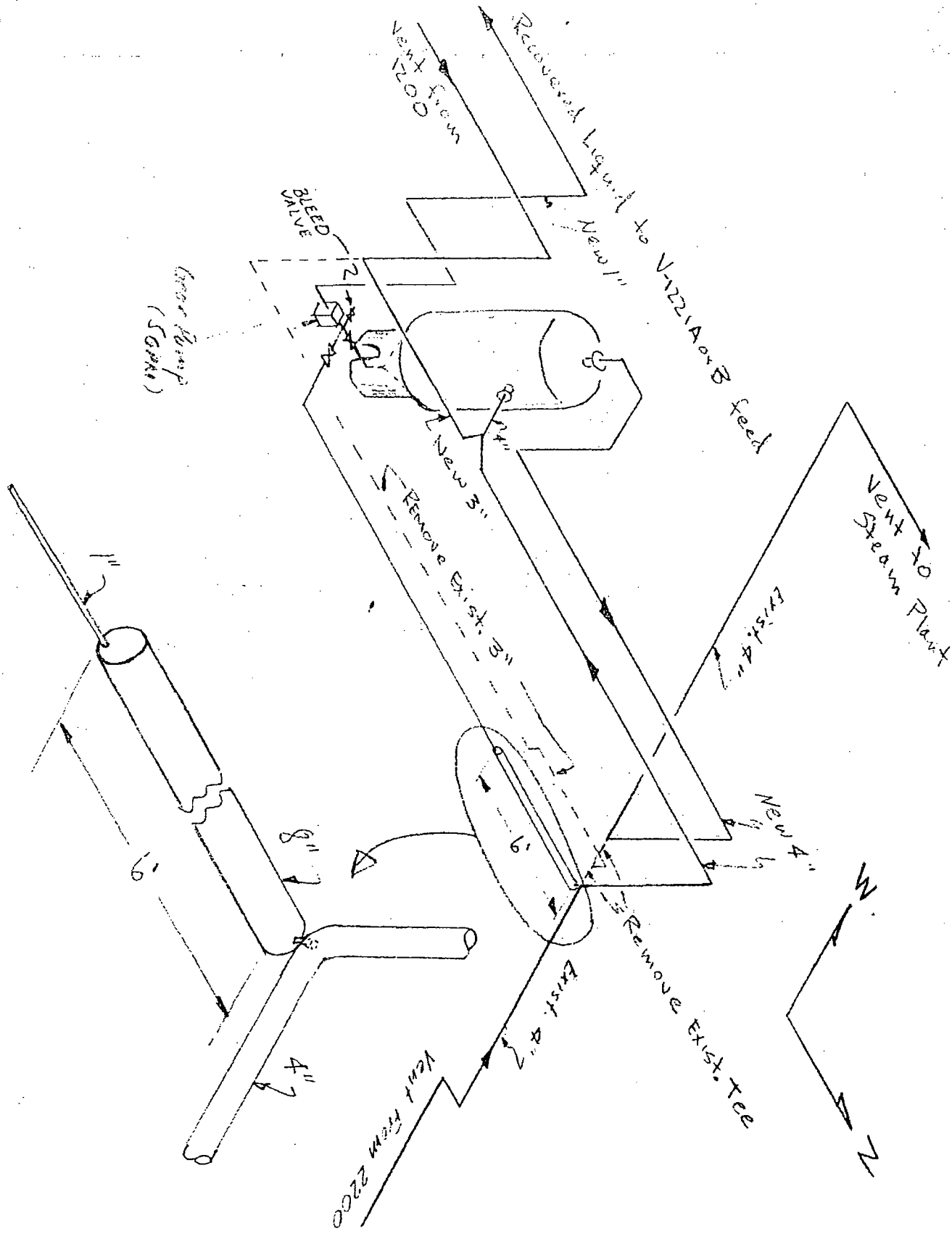

SHELL CHEMICAL CORPORATION
TORRANCE PLANT

JOB TITLE REACTOR VENT KNOCKOUT VESSEL - 1200 AREA - STYRENE

DATE _____ DRAWN BY _____ SS

JOB NUMBER _____ APPROVED BY _____

TORRANCE
SH-0007436

AUGUST 13, 1962

SUPERINTEDENT - TECHNICAL

CHIEF ENGINEER

AIR POLLUTION CONTROL PERMIT
FOR SCRUBBERS FOR GASES DIS-
CHARGED FROM BLOWDOWN VESSELS -
WORK ORDER 6542-00

Enclosed is the following:

1. One pencil copy of APCD Form No.400-A.

2. One copy of brief equipment description.

3. Five (5) copies of each of the following drawings:

   a. Plot plan Styrene Plant.

   b. Plot plan Torrance Plant.

   c. Flow Sheet (SS-60-4528-A).

Original Signed by J. Levada

JLP:bet

J. Levada

cc: L. R. Donkle
Engr. File 602-3E
608-11E (W.O.6542-00) ⇐ Copy To
Central Files

TORRANCE
SH-0007437

BRIEF EQUIPMENT DESCRIPTION

This job consists of the revision and relocation of two existing 2'-6" by 10'-9" vessels. These vessels are to act as scrubbing towers atop the alkylation reactor blowdown vessels.

No existing flare lines are to be revised.

No electrical gear is to be installed.

SC 3073 9-53
PRINTED IN U.S.A.

Bet
[illegible]

ENG
TREA
STAMPES

SHELL CHEMICAL CORPORATION

WORK ORDER

JOB NUMBER [illegible]
ACCOUNT NO. [illegible]
ESTIMATE LABOR
" MATERIAL
" TOTAL [illegible]

654200
A. F. E. NO. [illegible]

DATE [illegible] 19__
A/U 63
SRT 622-4

ORDER EXPLANATION

Scrubbers for Gases Discharged
from Blowdown Chassis

Plant Change WO 835500 $5300 00

9800

ENGINEERING DEPT.
JUN 4 1962
Chief Engr.
Asst. Chief Engr. Office
Asst. Chief Engr. Field
Senior Engr.
J. L. Petty
PLS. HDL.
DATE ANS.
ANS. BY
ENG. FILE

PROPOSED BY

RECOMMENDED

APPROVED

TORRANCE
SH-0007439

SC 3073 9-53
PRINTED IN U.S.A.

ENG.
STORES
TRAN

SHELL CHEMICAL CORPORATION

JOB NUMBER 62-15 [illegible]
ACCOUNT No. 41201- 39/40
ESTIMATE LABOR
" MATERIAL
" TOTAL $[illegible] ⁰⁰

WORK ORDER

835500

DATE 6/1/62 19

A. F. E. NO. [illegible]

ORDER EXPLANATION

Relocate vessel & Reuse existing piping for Scrubber used for Gases Discharged from Blowdown Vessels

4800
5300
4,500

Capital work order 654200 $3000 ⁰⁰

TORRANCE
SH-0007440

PROPOSED BY	RECOMMENDED	APPROVED

J Levada

MEMORANDUM OF JUSTIFICATION
AFE NO. SRT 406
SCRUBBERS FOR GASES DISCHARGED
FROM BLOWDOWN VESSELS
654200 3000 00
835500 5300 00

SUMMARY

The alkylation reactors and fractionating columns in the ethylbenzene production units are provided with rupture discs to prevent excessive pressures within the equipment. When a rupture disc bursts, the resulting hot liquid and vapors, including HCl in the case of a reactor, are thus discharged into a blowdown vessel in each unit, V-1227 and V-2227, with subsequent discharge of the vapors and some entrained liquid to the atmosphere through a short stack. This discharge of HCl, hydrocarbon vapor and entrained liquid hydrocarbons, creates a serious hazard to personnel and equipment and violates APCD regulations.

It is proposed to install scrubbing towers in each of the ethylbenzene production units to reduce the discharge of hydrochloric acid, hydrocarbon vapors and entrained hydrocarbon liquid. The gases and vapors leaving the blowdown vessels are to be water scrubbed prior to discharge to the atmosphere. Existing desuperheaters in retired stock would be converted into water scrubbing towers for this purpose as shown on the attached sketches, SS-60-4528A and SS-62-5227. Addition of water to the scrubber and dispersing steam to the stack would be done automatically by flow actuated valves. No reduction in operating cost or increased production would result. The cost is estimated at $8,300 with 12 weeks for completion.

PRESENT EQUIPMENT

The alkylation reactors and fractionating columns in the ethylbenzene production units are provided with rupture discs to prevent excessive pressures within the equipment. These rupture discs are rated at 20 psig pressure at bursting. After bursting, they discharge liquid and vapors through a 12-inch blowdown header into a vessel in each unit, V-1227 and V-2227. The vessels have 14-inch diameter stacks for discharging gases and vapors to the atmosphere. A steam line is connected to the stack of each vessel to permit addition of steam by a hand-operated valve to increase the dispersion of the vapors.

Hydrochloric acid and benzene vapor are discharged to the atmosphere along with some entrained liquid hydrocarbon whenever a disc ruptures on the alkylation reactors. The amount of hydrochloric acid may be very large if the excessive pressure resulted from the admission of water into the reactor. Benzene vapor will discharge until the contents of the reactor are cooled below the boiling point. As the operating pressure of the alkylation reactors at the present high production rates is 7-8 psig, a considerable amount of flashing occurs with pressure release.

PROPOSED EQUIPMENT

It is proposed to install a scrubber on the vapor stream from each blowdown vessel as shown on the attached sketch. The gases and vapors would be scrubbed with water supplied through a flow actuated valve. Desuperheaters from retired equipment stock would be converted for this installation. These towers are 2'6" in diameter by 10'9" in length and are presently equipped with inlet water ports. Four spray nozzles, each capable of discharging ten gpm of water would be installed in the scrubber. The adequacy of the existing tower was determined by conditions shown in the appendix. The vapor inlet port would be altered to permit a tangential entry of the incoming vapor. The pressure of the existing cooling water return header is sufficient so that no water pump is needed. The water from the scrubber would drain by gravitional flow and accumulate in the existing unit sumps where it would be held until the hydrocarbons could be recovered and the acidic water disposed of by controlled transfer to the cooling water system which normally requires addition of acid. The existing steam line would be rerouted to the gas outlet of the scrubber and will have a control system installed similar to that of the water line. In addition, the existing loop seals in the vent gas system are to be provided with flow actuated block valves to prevent discharges at those points.

ALTERNATIVES

The installation of remotely controlled valves on the outlet stacks of the blowdown vessels may be a possible but risky alternative. Stopping the emission of HCl and hydrocarbon vapors by closing a valve is potentially dangerous as another rupture disc failure, which can be violent, would then be into a closed system.

Installation of relief valves instead of rupture discs would solve the existing problem of a continuing discharge of HCl and hydrocarbon vapors but would be hazardous. The normal operating conditions are such that relief valves would not perform reliably.

The use of caustic instead of water as the scrubbing material is not recommended as previous tests did not disclose a significant improvement over water scrubbing in HCl removal and an additional tank pump would be required to have caustic always available as the scrubbing material.

JUSTIFICATION

Recent experience with rupture disc failures has been good as during the last year no failures have occurred; however, there have been periods when ruptures occurred once every few months. Although future failure frequency is expected to be low, the threat of disc rupture is ever present.

The discharge of hydrochloric acid, hydrocarbon vapors, and entrained liquid from the stack of the blowdown vessel resulting from the bursting of a rupture disc creates a serious hazard to personnel and equipment. This acidic material is discharged from the stack with such force that it blankets the entire unit and surrounding area with a misty vapor. If winds are blowing from the West or North, this vapor is either carried over the Butadiene Plant or the ethylene unit and reacts with the ammonia vapor which is continuously

being emitted from these units forming a visible white cloud of ammonium chloride which has been observed to drift for many miles over the South Bay area. This acidic material has also settled upon the Styrene Plant parking lot causing damage to automobile paint and trim. Under adverse weather conditions (still and foggy) the vapors hang over the units requiring personnel to use gas masks to enter the area. One man was hospitalized two years ago from breathing acidic fumes when a reactor disc failed.

The APCD has not yet forced us to receive all of the relieving devices in gathering systems equipped with flares as we have maintained that the rupture discs seldom fail. However, a period of bad experiences, detected by the white cloud emissions, could allow them to put considerable pressure on us to completely revise our relieving system.

This proposal is expected to eliminate the personnel hazard due to the emitted benzene and HCl vapors and the subsequent formation of white ammonium chloride clouds now occurring during disc failure by the removal of HCl and the condensation of most of the aromatic hydrocarbons by water scrubbing. The uncondensed hydrocarbons (primarily methane and ethane) which would be vented, are not injurious to personnel and will be dispersed by steam to minimize the fire hazard.

CONSTRUCTION SCHEDULE

This installation could be completed by Shell forces in 12 weeks after approval.

DEK/LEH/eln
5/22/62

SC 1003-4 (Rev. 1-60)—Printed in U. .A.

REFERENCE

SHELL CHEMICAL COMPANY

DATE APRIL 19, 1962

TO CHIEF TECHNOLOGIST

FROM CHIEF ENGINEER

SUBJECT CONFIRMING FORWARDING OF "288"

CIRCULATING NUMBER: 764 - Scrubbers for Gases Discharged from Blowdown Vessels

FORWARDED TO: L. E. Hanstedt DEPT. Styrene

LEFT ENGINEERING: 4/19/62

CONFIRMING TELEPHONE CALL TO:

ESTIMATE NUMBER: 62-15

JOB ENGINEER: J. L. Petty

M. K. Wilson
For J. Levada

DES:mkw

cc: Engineering Estimate File
Originator of "288" L. E. Hanseted

TORRANCE
SH-0007445

MEMORANDUM OF JUSTIFICATION
AFE NO.
SCRUBBERS FOR GASES DISCHARGED
FROM BLOWDOWN VESSELS

SUMMARY

The alkylation reactors and fractionating columns in the ethylbenzene production units are provided with rupture discs to prevent excessive pressures within the equipment. When a rupture disc bursts, the resulting liquid and vapors, including HCl in the case of a reactor, is thus discharged into a blowdown vessel in each unit, V-1227 and V-2227, with subsequent discharge of the vapors and some entrained liquid to the atmosphere through a short stack. This discharge of HCl, hydrocarbon vapor and entrained liquid hydrocarbons, creates a hazard to personnel and equipment and ~~the possibility of~~ violations APCD regulations.

It is proposed to install scrubbing towers in each of the ethylbenzene production units to reduce the discharge of hydrochloric acid, hydrocarbon vapors and entrained hydrocarbon liquid. The gases and vapors leaving the blowdown vessels are to be water scrubbed prior to discharge to the atmosphere. Existing desuperheaters in retired stock would be converted into water scrubbing towers for this purpose as shown on the attached sketches SS-60-4528A & SS-62-525. Addition of water to the scrubber and dispersing steam to the stack would be done automatically by flow ~~[illegible]~~-actuated valves. No reduction in operating cost or increased production would result. The cost is estimated at $ 8300 with 12 weeks for completion.

PRESENT EQUIPMENT

The alkylation reactors and fractionating columns in the ethylbenzene production units are provided with rupture discs to prevent excessive pressures within the equipment. These rupture discs are rated at 20 psig pressure [illegible]. After bursting, they discharge liquid and vapors [illegible]

TORRANCE
SH-0007446

blowdown header into a vessel in each unit, V-1227 and V-2227. The vessels have 14-inch diameter stacks for discharging gases and vapors to the atmosphere. A steam line is connected to the stack of each vessel to permit addition of steam by a hand-operated valve to increase the dispersion of the vapors.

Hydrochloric acid and benzene vapor are discharged to the atmosphere along with some entrained liquid hydrocarbon whenever a disc ~~ex~~ ruptures on the alkylation reactors. The amount of hydrochloric acid may be very large if the excessive pressure resulted from the admission of water into the reactor. Benzene vapor will discharge until the contents of the reactor are cooled below the boiling point. As the operating pressure of the alkylation reactors at the present high production rates is 7-8 psig, a considerable amount of flashing occurs with the pressure release.

PROPOSED EQUIPMENT

It is proposed to install a scrubber on the vapor stream from each blowdown vessel as shown on the attached sketch. The gases and vapors would be scrubbed with water supplied through a flow ~~or pressure~~-actuated valve. Desuperheaters from retired equipment stock would be converted for this installation. THESE TOWERS ARE 2'-6" IN DIAMETER BY 10'-9" IN LENGTH AND ARE PRESENTLY EQUIPPED WITH INLET WATER PORTS Four spray nozzles, each capable of discharging ten gal of water per minute, would be installed in the scrubber. THE ADEQUACY OF EXISTING POWER WAS DETERMINED BY [redacted] CONDITIONS [redacted] SHOWN IN THE APPENDIX. The vapor inlet port would be altered to permit a tangential entry of the incoming vapor. The pressure of the existing cooling water return header is sufficient so that no water pump is needed. The water from the scrubber would drain by gravitional flow and accumulate in the existing unit sumps where it would be held until the hydrocarbons could be recovered and the acidic water disposed of by controlled transfer to the cooling water system which normally requires addition of acid. The existing steam line would be rerouted to the gas outlet of the scrubber and will have a control system installed similar to that of the water line. In addition, the existing loop seals in the vent gas system are to be provided with flow ~~[illegible]~~-actuated

TORRANCE
SH-0007447

block valves to prevent discharges at those points.

ALTERNATIVES

The installation of remotely controlled valves on the outlet stacks of the blowdown vessels may be a possible but risky alternative. Stopping the emission of HCl and hydrocarbon vapors by closing a valve is potentially dangerous as another rupture disc failure, which can be violent, would then be into a closed system.

Installation of relief valves instead of rupture discs would solve the existing probelm of a continuing discharge of HCl and hydrocarbon vapors but would be hazardous. The normal operating conditions are such that relief valves would not perform reliably.

The use of caustic instead of water as the scrubbing material is not recommended as previous tests did not disclose a significant improvement over water scrubbing in HCl removal and an additional tank pump would be required to have caustic always available as the scrubbing material.

JUSTIFICATION

The discharge of hydrochloric acid, hydrocarbon vapors and entrained liquid resulting from the bursting of a rupture disc creates a serious hazard to personnel and equipment. In addition, the prevailing wind carries the discharged material into the cooling towers of the Butadiene Plant where the HCl reacts to form a pungent blue cloud which attracts unfavorable notice and comment from the APCD. Acidic material depositing on cars in the Styrene Plant parking lot has damaged paint and trim.

The proposed scrubber will absorb the HCl into the water, will cool the hydrocarbon vapors enough to condense most of the aromatic hydrocarbons and scrub out any entrained liquid hydrocarbons. The hydrocarbons not removed, primarily methane and ethane, are not injurious to personnel and will be dispersed by steam to minimize the fire hazard.

[illegible]

The installation would be completed by [illegible]

TORRANCE
SH-0007448

APPENDIX

The following are the conditions assumed by which the water flow rates were determined.

Maximum Flow Rate ~~[illegible]~~ ~~Hydrocarbon and HCl~~	100,000 ft^3/hr
Maximum HCl content	20%
Temp. of ~~[illegible]~~ gases to scrubber	221° F
Calculated minimum water Flow Rate for 100% absorption of HCl vapor	5.0 gal/min
Proposed Water Flow Rate	40 gal/min
Safety Factor	8.0
Maximum velocity of Hydrocarbon through the 2.5 ft Diameter Vessel	16,300 ft/hr
Maximum allowable vapor velocity through 2.5 ft Diameter Vessel Without Hydrocarbon entrainment using equation from Perry.	18,000 ft/hr

DEK:jy
11-7-60

Paul Konstan

OCTOBER 1, 1962

SUPERINTENDENT - TECHNICAL

CHIEF ENGINEER

APCD PERMIT FOR SOLVENT
HANDLING FACILITIES,
PIP LATEX - W.O.6559-00

The following items are attached for further handling in obtaining the subject permit:

(a) One (1) pencil copy of APCD Form 400-A

(b) One (1) copy of job description

(c) Five (5) copies of sketch SS-62-5436, titled "Polyisoprene Latex Solvent Handling System"

(d) Five (5) copies each of leafax plot plans YT-5053-2 and YT-5069 marked in red to indicate the location of equipment involved.

Original Signed by J. Levada

PK:bet

J. Levada

cc: Engr. File 602-3E
Engr. File 608-21E (W.O.6559-00) ← Copy To
Central Files

TORRANCE
SH-0000619

AIR POLLUTION CONTROL DISTRICT · COUNTY OF LOS ANGELES
434 SOUTH SAN PEDRO STREET, LOS ANGELES 13, CALIFORNIA. MADISON 9-4711

APPLICATION

PAUL KONSTAAL

AUTHORITY TO CONSTRUCT AND PERMIT TO OPERATE

INSTRUCTIONS

A. A FILING FEE OF $10.00 MUST ACCOMPANY EACH APPLICATION. CHECKS OR MONEY ORDERS SHOULD BE MADE PAYABLE TO THE AIR POLLUTION CONTROL DISTRICT, COUNTY OF LOS ANGELES.

B. THIS APPLICATION MUST BE FILLED OUT COMPLETELY AND MUST BE FILED IN TRIPLICATE.

C. APPLICATIONS ARE INCOMPLETE UNLESS ACCOMPANIED BY DUPLICATE COPIES OF ALL PLANS, SPECIFICATIONS AND DRAWINGS REQUIRED. DETAILS REQUIRED FOR SPECIFIC EQUIPMENT ARE LISTED ON SEPARATE FORMS WHICH ARE AVAILABLE UPON REQUEST.

D. THIS APPLICATION MUST BE SIGNED BY A RESPONSIBLE MEMBER OF THE ORGANIZATION THAT IS TO OPERATE THE EQUIPMENT FOR WHICH APPLICATION IS MADE. INCOMPLETE APPLICATIONS ARE NOT ACCEPTABLE.

ENGINEERING DIVISION
ROBERT L. CHASS
DIRECTOR OF ENGINEERING

APPLICATION INFORMATION

1. PERMIT TO BE ISSUED TO (BUSINESS LICENSE NAME OF CORPORATION, COMPANY, INDIVIDUAL OWNER OR GOVERNMENTAL AGENCY THAT IS TO OPERATE THE EQUIPMENT): SHELL CHEMICAL COMPANY, A DIVISION OF SHELL OIL COMPANY

2. MAILING ADDRESS:
NUMBER P. O. Box 211 STREET Torrance CITY OR COMMUNITY ZONE

3. ADDRESS AT WHICH THE EQUIPMENT IS TO BE OPERATED:
NUMBER 19205 S. Vermont STREET Los Angeles CITY OR COMMUNITY ZONE

4. TYPE OF ORGANIZATION: CORPORATION [X] PARTNERSHIP [ ] INDIVIDUAL OWNER [ ] GOVERNMENTAL AGENCY [ ]

5. GENERAL NATURE OF BUSINESS: Manufacture of synthetic rubber

6. EQUIPMENT DESCRIPTION. PURSUANT TO THE PROVISIONS OF THE STATE HEALTH AND SAFETY CODE AND THE RULES AND REGULATIONS OF THE AIR POLLUTION CONTROL DISTRICT, APPLICATION IS HEREBY MADE FOR AUTHORITY TO CONSTRUCT AND PERMIT TO OPERATE THE FOLLOWING EQUIPMENT: W.O. 6559-00

Alteration of the polybutadiene latex unit as described by Permit No. A-13145 by the addition of: (a) V-551, solvent flash vessel; (b) P-556, concentrate pump; (c) E-555, concentrate heater; and (d) E-554, solvent condenser.

7. ESTIMATED COST OF EQUIPMENT OR OF ALTERATION: AIR POLLUTION CONTROL EQUIPMENT: $ BASIC EQUIPMENT: $7,000

8. PRESENT STATUS OF EQUIPMENT (CHECK AND COMPLETE APPLICABLE ITEMS):

		ESTIMATE STARTING DATE	ESTIMATE COMPLETION DATE
X	CONSTRUCTION OR INSTALLATION NOT STARTED.		
	CONSTRUCTION OR INSTALLATION PARTLY COMPLETED.	Oct 1, 1962	Oct 15, 1962
	CONSTRUCTION COMPLETED.		
	EQUIPMENT IS TO BE ALTERED.		
	EQUIPMENT IS PARTLY ALTERED.		
	EQUIPMENT HAS BEEN ALTERED.		
	TRANSFER OF OPERATOR, OWNER OR LESSEE.		
	TRANSFER OF LOCATION.		

9. IF THIS EQUIPMENT HAD A PREVIOUS WRITTEN PERMIT GIVE NAME OF CORPORATION, COMPANY OR INDIVIDUAL OWNER THAT OPERATED THIS EQUIPMENT AND STATE PREVIOUS AIR POLLUTION CONTROL DISTRICT PERMIT NUMBER, IF KNOWN.
NAME Shell Chemical Company PERMIT NUMBER 16094 A06312

10. SIGNATURE OF RESPONSIBLE MEMBER OF FIRM: → Original Signed by M. L. Sagenkahn DATE OF APPLICATION:

11. TYPE OR PRINT NAME AND OFFICIAL TITLE OF PERSON SIGNING THIS APPLICATION.
NAME M. L. Sagenkahn
TITLE Superintendent - Technical
PHONE NUMBER

A-

VALIDATION (A.P.C.D. USE ONLY)

16-5005 R9-60-1 TORRANCE SH-0000616 Form 400-

AIR POLLUTION CONTROL DISTRICT — COUNTY OF LOS ANGELES
434 SOUTH SAN PEDRO STREET, LOS ANGELES 13, CALIFORNIA. MADISON 9-4711

APPLICATION

AUTHORITY TO CONSTRUCT AND PERMIT TO OPERATE

INSTRUCTIONS

A. A FILING FEE OF $10.00 MUST ACCOMPANY EACH APPLICATION. CHECKS OR MONEY ORDERS SHOULD BE MADE PAYABLE TO THE AIR POLLUTION CONTROL DISTRICT, COUNTY OF LOS ANGELES.

B. THIS APPLICATION MUST BE FILLED OUT COMPLETELY AND MUST BE FILED IN TRIPLICATE.

C. APPLICATIONS ARE INCOMPLETE UNLESS ACCOMPANIED BY DUPLICATE COPIES OF ALL PLANS, SPECIFICATIONS AND DRAWINGS REQUIRED. DETAILS REQUIRED FOR SPECIFIC EQUIPMENT ARE LISTED ON SEPARATE FORMS WHICH ARE AVAILABLE UPON REQUEST.

D. THIS APPLICATION MUST BE SIGNED BY A RESPONSIBLE MEMBER OF THE ORGANIZATION THAT IS TO OPERATE THE EQUIPMENT FOR WHICH APPLICATION IS MADE. INCOMPLETE APPLICATIONS ARE NOT ACCEPTABLE.

ENGINEERING AND EVALUATION & PLANNING DIVISION
ROBERT L. CHASS
DIRECTOR OF ENGINEERING

APPLICATION INFORMATION

1. PERMIT TO BE ISSUED TO (BUSINESS LICENSE NAME OF CORPORATION, COMPANY, INDIVIDUAL OWNER OR GOVERNMENTAL AGENCY THAT IS TO OPERATE THE EQUIPMENT): SHELL CHEMICAL CO., DIVISION OF SHELL OIL CO.

2. MAILING ADDRESS: SHELL CHEMICAL CO. P.O. BOX 211, TORRANCE, CALIF.
NUMBER | STREET | CITY OR COMMUNITY | ZONE

3. ADDRESS AT WHICH THE EQUIPMENT IS TO BE OPERATED:
19201 | S. VERMONT | LOS ANGELES
NUMBER | STREET | CITY OR COMMUNITY | ZONE

4. TYPE OF ORGANIZATION: CORPORATION ☒ PARTNERSHIP ☐ INDIVIDUAL OWNER ☐ GOVERNMENTAL AGENCY ☐

5. EQUIPMENT DESCRIPTION. PURSUANT TO THE PROVISIONS OF THE STATE HEALTH AND SAFETY CODE AND THE RULES AND REGULATIONS OF THE AIR POLLUTION CONTROL DISTRICT, APPLICATION IS HEREBY MADE FOR AUTHORITY TO CONSTRUCT AND PERMIT TO OPERATE THE FOLLOWING EQUIPMENT: ALTERATION OF THE POLYISOPRENE LATEX UNIT BY THE ADDITION OF THE FOLLOWING PIECES OF EQUIPMENT: a) V-3311, SOLVENT FLASH VESSEL; b) P-3366, CONCENTRATE PUMP; c) E-3334, CONCENTRATE HEATER; and d) E-3330, SOLVENT CONDENSER.

6. ESTIMATED COST OF EQUIPMENT OR OF ALTERATION: AIR POLLUTION CONTROL EQUIPMENT: $ BASIC EQUIPMENT: $ 7800

7. PRESENT STATUS OF EQUIPMENT (CHECK AND COMPLETE APPLICABLE ITEMS):
- ☐ CONSTRUCTION OR INSTALLATION NOT STARTED. ESTIMATE STARTING DATE OCT. 1, 1962 ESTIMATE COMPLETION DATE OCT. 15, 1962.
- ☐ CONSTRUCTION OR INSTALLATION PARTLY COMPLETED. ESTIMATE COMPLETION DATE
- ☐ CONSTRUCTION COMPLETED. EQUIPMENT HAS NO PREVIOUS PERMIT AT THIS ADDRESS.
- ☐ EQUIPMENT IS TO BE ALTERED. ESTIMATE STARTING DATE
- ☐ EQUIPMENT HAS BEEN ALTERED, ALTERATIONS COMPLETED.
- ☐ EQUIPMENT IS PARTLY ALTERED. ESTIMATE COMPLETION DATE
- ☐ CHANGE OF OPERATOR, OWNER OR LESSEE.
- ☐ CHANGE OF LOCATION.

8. IF THIS EQUIPMENT HAD A PREVIOUS WRITTEN PERMIT GIVE NAME OF CORPORATION, COMPANY OR INDIVIDUAL OWNER THAT OPERATED THIS EQUIPMENT AND STATE PREVIOUS AIR POLLUTION CONTROL DISTRICT PERMIT NUMBER, IF KNOWN.
NAME SHELL CHEMICAL CO PERMIT NUMBER

9. SIGNATURE OF RESPONSIBLE MEMBER OF FIRM: →

10. TYPE OR PRINT NAME AND OFFICIAL TITLE OF PERSON SIGNING THIS APPLICATION.
NAME
TITLE
TORRANCE SH-0000620
TELEPHONE NUMBER

VALIDATION (A.P.C.D. USE ONLY)
APPLICATION NUMBER A-

16-5005 R7-58-9 Form 400-A

POLYISOPRENE LATEX SOLVENT
HANDLING SYSTEM

REF: WORK ORDER NO.6559-00

This process consists essentially of a single stage flash of polymer-containing solvent in order to remove the polymer before purifying the solvent for reuse. Existing vessel V-3311 (with pressure relief valve discharging to the Copolymer flare system) is used as the flash chamber. An existing recirculating pump P-3366, and a steam heated G-fin exchanger provide heat for the flash operation. Solvent vapors are condensed in exchanger E-3330 (existing) and reflux to vessel V-3301 (also existing). The existing solvent transfer pump P-3388 returns the flashed solvent to the purification facilities. The concentrated polymer is transferred to V-3811 by taking a slip-stream off of the recirculating pump discharge.

V-3301 (EXIST.)
SOLVENT SURGE
8'6"x10'0" 3750 GAL
100 °F @ 10 PSIG

E-3330 (EXIST)
SOLVENT CONDENSER
198 FT²

V-3311 (EXIST.)
SOLVENT FLASH
8'6"x10'0" 3750 GAL
120 °F @ 15 PSIG

E-3334
CONCENTRATE HEATI
176 FT² G-FIN

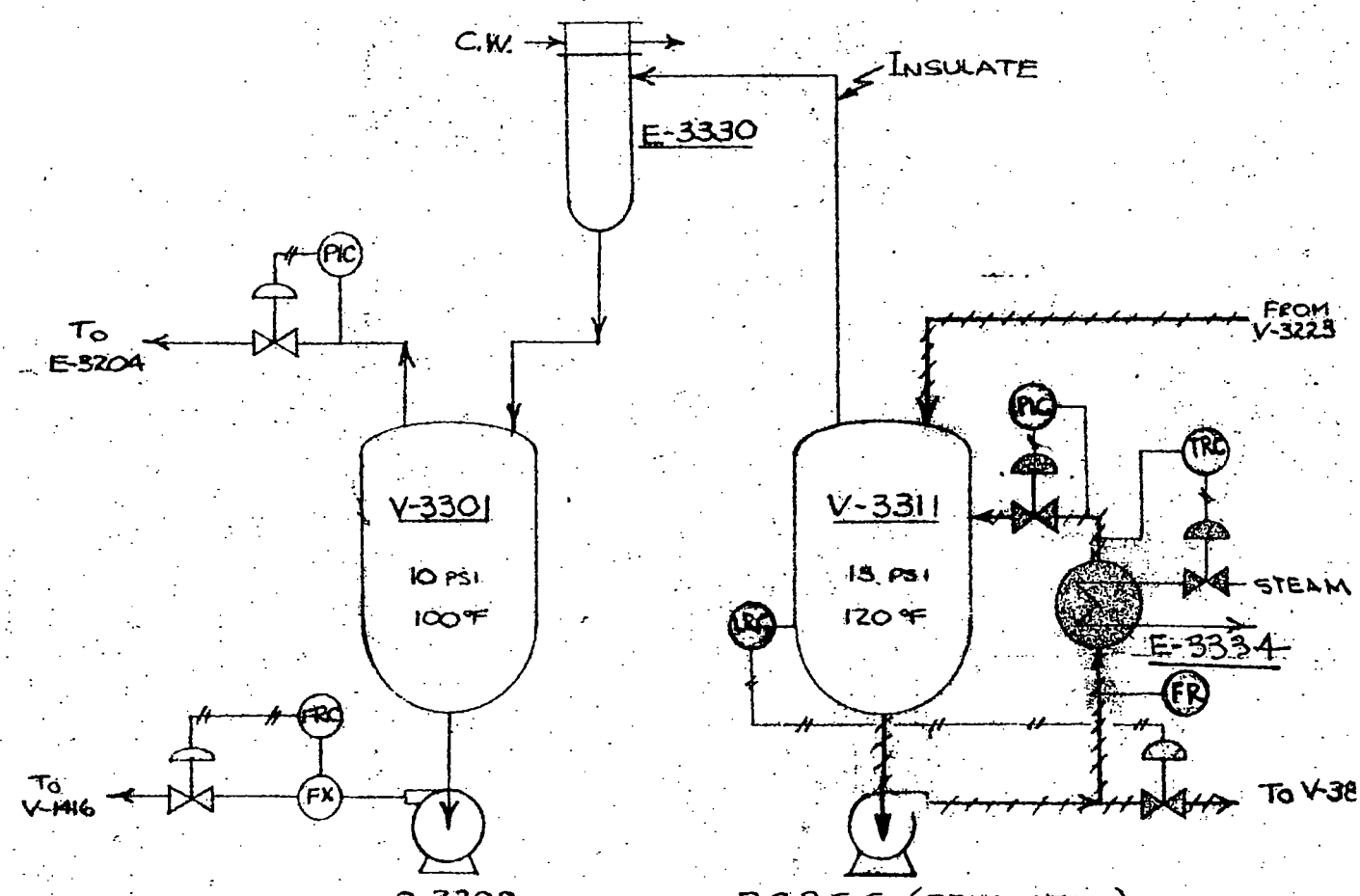

P-3388
SOLVENT TRANSFER PUMP
30 GPM @ 100 °F
7.5 HP
(EXISTING)

P-3366 (RELOCATED)
CONCENTRATE PUMP
120 GPM @ 120 °F
20 H.P.

+++ NEW PIPIN
NEW EQUIPMENT

TORRANCE
SH-0000622

SHELL CHEMICAL CORPORATION
TORRANCE PLANT

JOB TITLE POLYISOPRENE LATEX SOLVENT HANDLING SYSTEM
DATE 9/6/62 DRAWN BY D. A. GAUDIO
JOB NUMBER W.O. 6559-00 APPROVED BY pk WP SS 62-5436

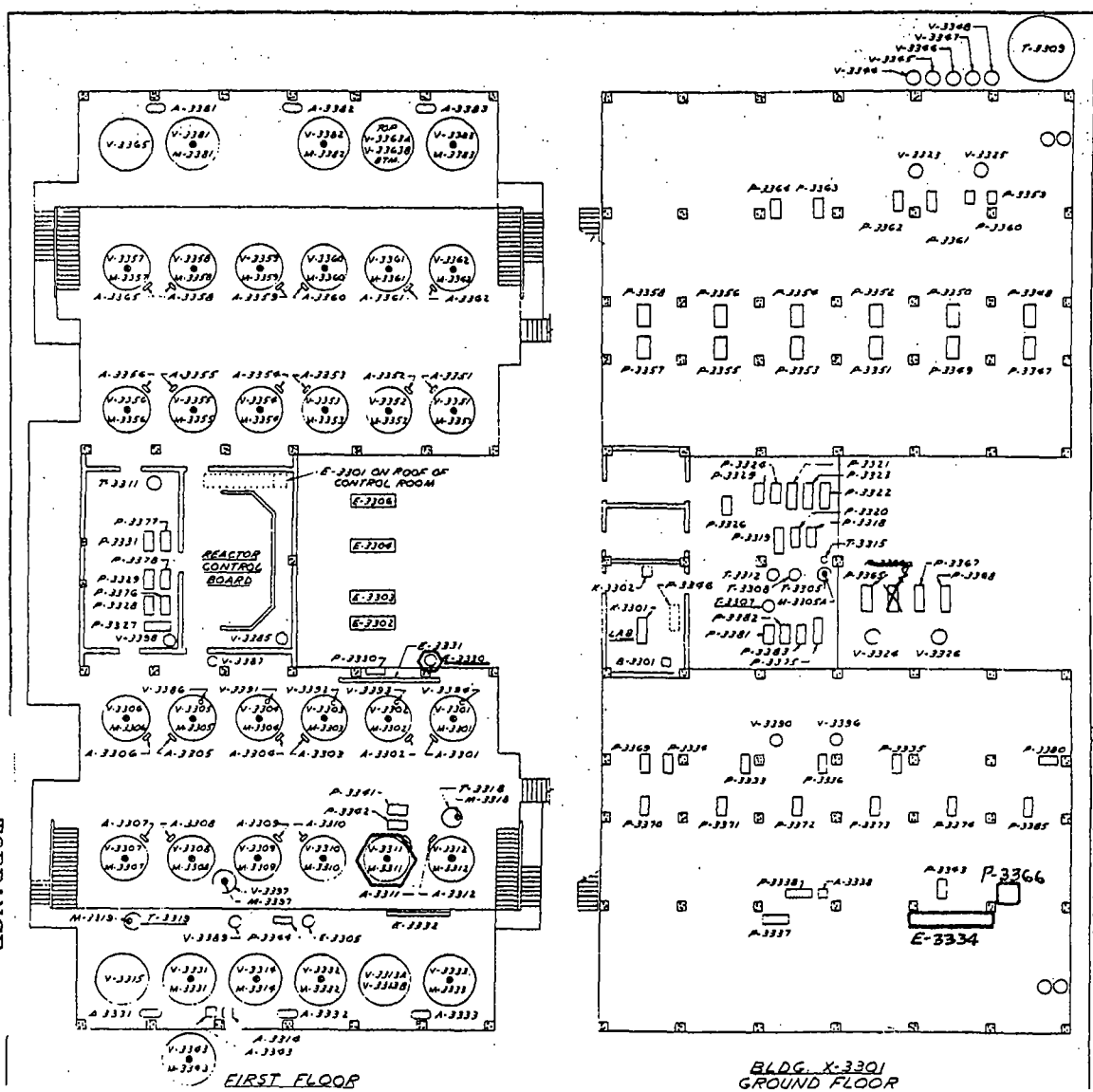

LIST OF EQUIPMENT

VESSELS

V-3301	LM #1 REACTOR
V-3302	LM #2 "
V-3303	LM #3 "
V-3304	LM #4 "
V-3305	LM #5 "
V-3306	LM #6 "
V-3307	LM #7 "
V-3308	LM #8 "
V-3309	LM #9 "
V-3310	LM #10 "
V-3311	LM #11 "
V-3312	LM #12 "
V-3313A	ISOPRENTANE SURGE
V-3313B	LM - STYRENE SURGE
V-3314	POLYISOPRENE CEMENT
V-3315	LM-FOAM KNOCKOUT
V-3316	JK-CONTINUOUS B.D. CAL TANK
V-3317	JK DITTO
V-3318	JK-CONT. STYRENE CAL TANK
V-3319	LM. DITTO
V-3320	POLYISOPRENE CEMENT
V-3321	LM DITTO #2
V-3322	LM DITTO #3
V-3323	POLYISOPRENE CEMENT
V-3324	DISPLACEMENT TURBE JK-LMD
V-3325	DITTO
V-3326	DITTO
V-3327	DITTO
V-3328	DITTO
V-3329	JK #1 REACTOR
V-3330	JK #2 "
V-3331	JK #3 "
V-3332	JK #4 "
V-3333	JK #5 "
V-3334	JK #6 "
V-3335	JK #7 "
V-3336	JK #8 "
V-3337	JK #9 "
V-3338	JK #10 "
V-3339	JK #11 "
V-3340	JK #12 "
V-3363A	JK - B.D. SURGE (TOP)
V-3363B	JK - B.D. SURGE (BTM)
V-3365	JK - FOAM KNOCKOUT
V-3381	JK #1 BLOWDOWN
V-3382	JK #2 "
V-3383	JK #3 "
V-3385	INST. AIR RECEIVER
V-3386	CATALYST ACCUMULATING V.
V-3387	CATALYST SURGE TANK
V-3389	ISOPENTANE VAPORIZER
V-3390	REFLUX ACTUATOR
V-3391	CATALYST MEASURING V
V-3392	" " "
V-3393	" " "
V-3394	" " "
V-3396	REFLUX ACTUATOR
V-3397	A.O. MIX TANK

AUXILIARY EQUIPMENT

A-3301	DURA SEAL UNITS
A-3302	DITTO
A-3303	DITTO
A-3306	DITTO
A-3307	DITTO
A-3308	DITTO
A-3309	DITTO
A-3310	DITTO
A-3311	DITTO
A-3312	DITTO
A-3331	DITTO
A-3332	DITTO
A-3333	DITTO
A-3343	DITTO
A-3351	DITTO
A-3352	DITTO
A-3353	DITTO
A-3354	DITTO
A-3355	DITTO
A-3356	DITTO
A-3357	DITTO
A-3358	DITTO
A-3359	DITTO
A-3360	DITTO
A-3361	DITTO
A-3362	DITTO
A-3381	DITTO
A-3382	DITTO
A-3383	DITTO

BLOWERS

B-3301	WILLIAMS LAB BLOWER

COMPRESSORS

K-3301	WILLIAMS LAB COMP.
K-3302	DITTO

EXCHANGERS

E-3301	REFLUX CONDENSER
E-3302	" "
E-3303	" "
E-3304	" "
E-3305	" "
E-3330	" "
E-3331	FEED PREHEATER
E-3332	" "

MIXERS

M-3301	FOR	V-3301
M-3302	"	V-3302
M-3303	"	V-3303
M-3304	"	V-3304
M-3305	"	V-3305
M-3305A	"	T-3305
M-3306	"	V-3306
M-3307	"	V-3307
M-3308	"	V-3308
M-3309	"	V-3309
M-3310	"	V-3310
M-3311	"	V-3311
M-3312	"	V-3312
M-3313	"	V-3313
M-3331	"	V-3331
M-3332	"	V-3332
M-3333	"	V-3333
M-3343	"	V-3343
M-3351	"	V-3351
M-3352	"	V-3352
M-3353	"	V-3353
M-3354	"	V-3354
M-3355	"	V-3355
M-3356	"	V-3356
M-3357	"	V-3357
M-3358	"	V-3358
M-3359	"	V-3359
M-3360	"	V-3360
M-3361	"	V-3361
M-3362	"	V-3362
M-3381	"	V-3381
M-3382	"	V-3382
M-3383	"	V-3383
M-3387	"	V-3387

PUMPS

P-3301	LM - STYRENE CAT'L P.
P-3302	LM - " " DITTO
P-3303	JK - BD. CHARGE PUMP
P-3304	JK - DITTO
P-3305	BATCH ACT CHARGE P
P-3306	LM - WATER CHARGE P
P-3307	JK - DITTO
P-3308	LM - SOAP CHARGE PUMP
P-3309	JK - DITTO
P-3310	SPARE SOAP CHARGE P.
P-3311	JK - SHORTSTOP
P-3312	JK - DITTO
P-3313	JK - DITTO
P-3314	LM - CATALYST CHARGE P
P-3315	LM - MOD. CHARGE PUMP
P-3316	JK - DITTO
P-3317	REFLUX PUMP
P-3318	POLYISOPRENE PUMP
P-3319	" "
P-3320	REFLUX PUMP A.O. PUMP
P-3321	" "
P-3322	" "

PUMPS (CONT)

P-3338	ISOPRENE COAG. FEED P.
P-3341	POLYISOPRENE SLURRY P.
P-3342	DITTO
P-3343	COAG. TRANSF. PUMP
P-3344	HOT W. FORMING POLYISO.
P-3345	WILLIAMS LAB. VAC. PUMP
P-3347	JK - CIRCULATOR PUMP
P-3348	JK - " DITTO
P-3349	JK - " DITTO
P-3350	JK - " DITTO
P-3351	JK - " DITTO
P-3352	JK - " DITTO
P-3353	JK - " DITTO
P-3354	" DITTO
P-3355	" DITTO
P-3356	" DITTO
P-3357	" DITTO
P-3358	" DITTO
P-3359	JK - STYRENE CHARGE P.
P-3360	JK - " DITTO
P-3361	JK - BD. CHARGE PUMP
P-3362	JK - " DITTO
P-3363	JK - LATEX TRANS. PUMP
P-3364	JK - " " "
P-3365	BD CHARGE PUMP
P-3366	" "
P-3367	STYRENE CHARGE
P-3368	" "
P-3369	CIRCULATOR WATER PUMP
P-3370	DITTO
P-3371	DITTO
P-3372	DITTO
P-3373	DITTO
P-3374	DITTO
P-3375	ACTIVATOR CHARGE PUMP
P-3376	LM - CONT. MODIFIER PUMP
P-3377	INITIATOR PUMP
P-3378	JK - MODIFIER PUMP
P-3380	REFLUX PUMP
P-3381	LM - SHORTSTOP SPARE P.
P-3382	LM - SHORTSTOP CONT. P.
P-3383	LM - SHORTSTOP BATCH P.
P-3385	CIRCULATOR WATER
P-3386	INITIATOR

STRAINERS

S-3301	JK - BLOWDW. LATEX STRAIN
S-3301A	JK - " " - SPARE
S-3302	LM - " " STRAIN.
S-3302A	LM - " " - SPARE

TANKS

T-3302	LM - SOAP VENT TANK
T-3304	JK - " " "
T-3305	ACTIVATOR VENT TANK
T-3306	SHORTSTOP
T-3307	LM - SHORTSTOP VENT T.
T-3308	LM - WATER " "
T-3309	REFRIG. METHANOL SUPPL
T-3311	STYRENE CALIB. TANK
T-3315	JK - ACC. CALIB. " "
T-3316	JK - SHORTSTOP CAL. " "
T-3317	LM - " " " "
T-3318	ISOPRENE WASH
T-3319	PUP SLURRY

1	7-8-64	PRELIMINARY	A.M.G.

SHELL CHEMICAL CORPORATION
NEW YORK PLANT

COPOLYMER PLANT
EQUIPMENT LOCATIONS
3300 AREA

DRAWN BY: FRED WUSTER

TORRANCE
SH-0000623

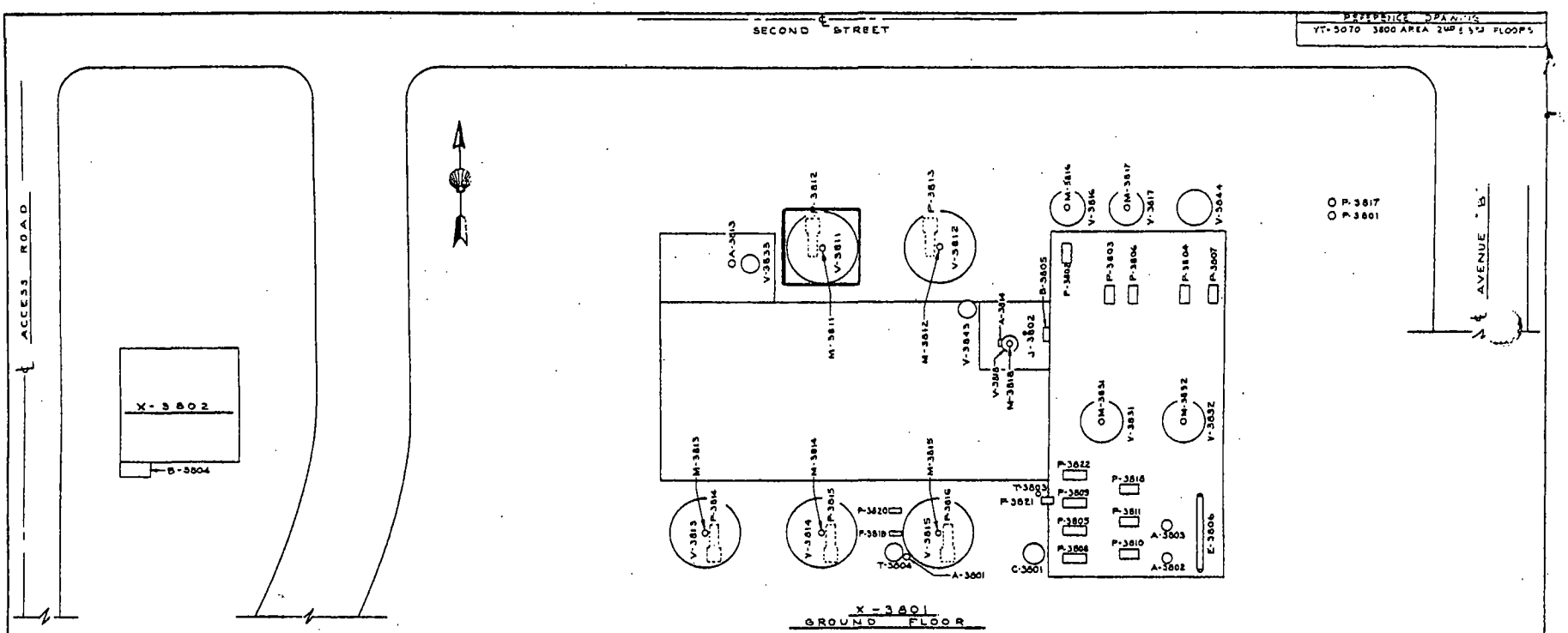

LIST OF EQUIPMENT

VESSELS

V-3811	SOLUTION BLEND
V-3812	" "
V-3813	" "
V-3814	" "
V-3815	" "
V-3816	ADDITIVE DILUTION
V-3817	" "
V-3818	ADDITIVE MAKEUP
V-3831	SLURRY PREP. VESSEL LINE NO. 1
V-3832	SLURRY PREP. VESSEL LINE NO. 2
V-3833	CATALYST STORAGE
V-3843	CATALYST SYSTEM KO DRUM
V-3844	BLOWDOWN DRUM

MIXERS

M-3811	MIXER FOR V-3811
M-3812	MIXER FOR V-3812
M-3813	MIXER FOR V-3813
M-3814	MIXER FOR V-3814
M-3815	MIXER FOR V-3815
M-3816	MIXER FOR V-3816
M-3817	MIXER FOR V-3817
M-3818	MIXER FOR V-3818
M-3831	MIXER FOR V-3831
M-3832	MIXER FOR V-3832

JETS

J-3802	ADDITIVE EVACUATION EJECTOR

COLUMNS

C-3801	SCRUBBER COLUMN

TANKS

T-3803	CAUSTIC MEASURING
T-3804	SEAL OIL

AUXILIARY

A-3801	SEAL OIL FILTER
A-3802	FEED FILTER
A-3803	
A-3815	CATALYST FILTER
A-3816	ADDITIVE SCALE

EXCHANGERS

E-3806	FEED PREHEATER

COMPRESSORS & BLOWERS

B-3804	SWITCH HOUSE PRESSURING FAN
B-3805	ADDATIVE FAN

PUMPS

P-3801	SUMP
P-3802	ADDITIVE
P-3803	HOT WATER SLURRY LINE NO. 1
P-3804	HOT WATER SLURRY LINE NO. 2
P-3805	SPARE P-3800 & P-3809
P-3806	COLD WATER SLURRY LINE NO. 1
P-3807	COLD WATER SLURRY LINE NO. 2
P-3808	CAUSTIC BOTTOM CIRC.
P-3809	CAUSTIC TOP CIRC.
P-3810	SOLVENT TRANSFER
P-3811	SPARE P-3810 & P-3818
P-3812	SOLUTION FEED V-3811
P-3813	SOLUTION FEED V-3812
P-3814	SOLUTION FEED V-3813
P-3815	SOLUTION FEED V-3814
P-3816	SOLUTION FEED V-3815
P-3817	SUMP SPARE
P-3818	DECANTER SOLVENT
P-3819	SEAL OIL
P-3820	SEAL OIL SPARE
P-3821	CAUSTIC CHARGE
P-3822	DECANTER WATER

SHELL CHEMICAL CORPORATION
COPOLYMER PLANT
3800 AREA
EQUIPMENT LOCATIONS
PLAN- GROUND FLOOR

TORRANCE
SH-0000624

PK

W.O. 6559

AIR POLLUTION CONTROL DISTRICT, COUNTY OF LOS ANGELES

434 South San Pedro Street Los Angeles 13, California MAdison 9-4711

October 11, 1962

A-15296

Shell Chemical Company,
A Division of Shell Oil Company
P. O. Box 211
Torrance, California

Attention: Mr. M. L. Sagenkahn, Superintendent - Technical

Gentlemen:

ALTER POLYISOPRENE LATEX UNIT (AS DESCRIBED BY PERMIT NO. A-13145) BY THE ADDITION OF A SOLVENT FLASH SYSTEM; LOCATED AT 19203 SOUTH VERMONT AVENUE, LOS ANGELES, CALIFORNIA.

Please refer to your application for authority to construct and permit to operate the equipment described above.

It is the conclusion of our engineers, based on an evaluation of the plans and specifications submitted, that the proposed installation can be operated in compliance with the existing air pollution control regulations.

You are hereby granted authority to construct the equipment as shown on the approved plans and specifications. This authorization is not a permit to operate and does not guarantee that the operation of the proposed equipment will comply with air pollution control regulations. This authorization expires on October 11, 1963, and your application will be automatically canceled unless a written request for a six month extension and a renewal fee of $10.00 is filed prior to the expiration date.

You are advised that you are required to familiarize yourself with all laws, ordinances and regulations of any governmental agency applicable to the installation and operation of the equipment for which this authority is issued and to comply therewith.

TORRANCE
SH-0000613

You are requested to telephone Mr. Kinsey at MAdison 9-4711, to notify this office when construction has been completed. An inspection will then be made to determine if the equipment has been constructed according to the approved plans. At that time the operations will be observed for compliance with the Rules and Regulations of the Air Pollution Control District.

After the final inspection has been made, you will be notified of the approval or denial of your application for permit to operate this equipment.

Very truly yours,

S. Smith Griswold
Air Pollution Control Officer

By R. J. MacKnight
R. J. MacKnight, Principal Engineer
Engineering Division

RJM:bm

Enclosure

J. R. Morton
NKG

February 8, 1963

Bureau of Radiological Health
State Department of Public Health
2151 Berkeley Way
Berkeley 4, California

Gentlemen:

New California radioactive material license applications which are to supersede Shell Chemical's existing Atomic Energy Commission (A.E.C.) By-product Material Licenses No.4-1880-2 and 4-1880-4 are enclosed for your approval. Termination forms for A.E.C. license No.4-1880-5 are attached also.

Differences in data between the California and A.E.C. licenses are as follows:

A. A.E.C. License No.4-1880-2

The names of Donald H. Adams, and Vernon Bruns who were listed as users in the A.E.C. license No.4-1880-2 have been removed from the State of California application. Mr. Adams is no longer at the licensed location, and presently Mr. Bruns is inactive in work concern radioactive materials.

B. A.E.C. License No.4-1880-4

The radioactive material, Strontium 90, as listed under Items 6c, 7c, and 8c in A.E.C. license No.4-1880-4 was transferred to Shell Development Company, Emeryville, California along with the Cobalt 60 unit, A.E.C. license No.4-1880-5. The Strontium 90 materials are four 3 microcurie sealed sources (U.S. Radium Corporation Model LAB-277) used in Victoreen Model 715 monitors as calibrating sources. The Victoreen monitors are safety units installed in the Cobalt 60 room to detect radiation leakage.

C. A.E.C. License No.4-1880-5

The A.E.C. license No.4-1880-5 is being terminated because the 18,000 curie Cobalt 60 unit has been transferred to Shell Development Company, Emeryville, California. Data related to this transfer was sent to the U.S. Atomic Energy Commission in Shell Development's letter dated June 28, 1962, and in Shell Chemical's letter dated July 6, 1962. The California Department of Public Health was informed about the transfer in Shell Chemical letters dated August 8, and 22, 1962.

TORRANCE
SO-0015110

In event you wish any further information or clarification please contact our Mr. W. C. Towner, Radiation Protection Officer directly.

Yours very truly,

Original Signed by G. S. Williamson

G. S. Williamson
Plant Manager

WCT:bet

cc: J. D. Morton w/attachments Copy T
W. C. Towner " "
J. T. Harlan w/copy of application superseding A.E.C.License 4-1880-2 and termination of A.E.C.License 4-1880-5
N. R. Legge w/o attachments
Engr. File 602-1E w/o attachments
Engr. File 601-2E " "
Central Files " "

TORRANCE
SO-0015111

STATE OF CALIFORNIA
DEPARTMENT OF PUBLIC HEALTH

APPLICATION FOR RADIOACTIVE MATERIAL LICENSE

This application is not to be used by physicians or medical institutions applying for the "human use" of radioactive materials (see instructions).

Before completing this form, familiarize yourself with the detailed instructions, Form RH 2553, and with applicable provisions of State Department of Public Health regulations: Licensing of Radioactive Materials and Standards for Protection against Radiation, California Administrative Code, Title 17, Chapter 5, Subchapter 4, Groups 2 and 3.

Items 1 and 14 must be completed for all applications. Other items must be completed as described in the instructions.

Use supplemental sheets where necessary and include any other supporting documents or information which will aid in evaluation of this application.

Provide complete, clear, and accurate information.

Submit two completed copies of each application and two copies of all supplemental and supporting material to: Bureau of Radiological Health, State Department of Public Health, 2151 Berkeley Way, Berkeley 4, California.

1. (a) NAME AND ADDRESS OF APPLICANT. (Institution, firm, hospital, individual, etc.)

Shell Chemical Company
A Division of Shell Oil Company
19821 Hamilton Street
Los Angeles, California

(b) STREET ADDRESS(ES) AT WHICH RADIOACTIVE MATERIAL WILL BE USED.

19821 Hamilton Street

(c) This is an application for:
1. A new California license [X]
2. Renewal of California Radioactive Material License No. _____
3. Amendment to California Radioactive Material License No. _____

2. DEPARTMENT(S) TO USE RADIOACTIVE MATERIAL AND PREVIOUS LICENSE NUMBER(S). (Indicate issuing agency if other than California)

Research Laboratory A.E.C. License No.4-1880-2

3.

(a) RADIOACTIVE MATERIAL	(b) CHEMICAL AND/OR PHYSICAL FORM	(c) POSSESSION LIMIT* (at any one time)
A. Carbon 14	Various forms as Isoprene, Styrene, Butadiene, Benzoic Acid, etc.	14 millicuries
B. Hydrogen 3	Tritiated polymers, etc.	3 millicuries
C. Sulfur 35	Mercaptans	3 millicuries

TORRANCE
SO-0015112

* Units shall be pounds for source material, grams for special nuclear material, milligrams for radium and curies or millicuries for all others.

4. DESCRIBE THE PROPOSED USE OF THE RADIOACTIVE MATERIAL (by department, when appropriate).
The radioactive materials in Item 3 will be used by the Research Laboratory in tracer techniques applied to various research projects. A typical experiment involves the polymerization of the tagged monomer to produce polymers. The amounts of radioactive material used in any experiment will be in the order of 0.05 millicuries. In all cases well controlled laboratory procedures will be used.

5. (a) INDIVIDUAL USER(S). (Name, title and dept. of individual(s) who will use or directly supervise use of radioactive material)
Richard M. Pymn - Research Chemist - Research Laboratory
James T. Harlan, Jr. - Senior Research Technologist - Research Laboratory

(b) RADIATION PROTECTION OFFICER. (Name of person designated as radiation protection officer)
W. C. Towner - Senior Engineer-Instrumentation - Engineering Department
(See attachment for resume')

TRAINING AND EXPERIENCE OF EACH INDIVIDUAL NAMED IN ITEM 5
(Radiographers should complete Form RH 2554 in addition to Items 6 and 7)

6. TYPE OF TRAINING	Where trained	Duration of Training	On the job (circle ans.)	Formal course (circle ans.)
a. Principles and practices of radiation protection including "Standards for Protection Against Radiation," California Radiation Control Regulations	See Attachment "A" Personnel Training and Experience		(Yes) No	(Yes) No
b. Radioactivity measurement standardization and monitoring techniques and instruments	" "" "		(Yes) No	(Yes) No
c. Mathematics and calculations basic to the use and measurement of radioactivity	" "" "		(Yes) No	(Yes) No
d. Biological effects of radiation	" "" "		(Yes) No	(Yes) No

7. EXPERIENCE WITH RADIOACTIVITY. (Actual use of radioisotopes or equivalent experience)

NAME	ISOTOPE	MAXIMUM AMOUNT	WHERE EXPERIENCE WAS GAINED (License No(s) if any)	DURATION OF EXPERIENCE	TYPE OF USE

See Attachment "A"
Personnel Training and Experience.

TORRANCE
SO-0015113

8. RADIATION DETECTION INSTRUMENTS. (Use supplemental sheets if necessary)

TYPE OF INSTRUMENTS (Include make and model number of each)	NUMBER AVAILABLE	RADIATION DETECTED	SENSITIVITY RANGE (mr/hr or equivalent)	WINDOW THICKNESS (mg/cm^2 where applicable)	USE Monitoring, surveying, measuring)
Tracerlab SU 14	1	Alpha Beta Gamma	0.01 to 25	30	Monitoring Surveying
Tracerlab SU3C	1	Alpha Beta Gamma	10 to 20,000 counts/min.	Less than 4	Monitoring Surveying

9. METHOD, FREQUENCY, AND STANDARDS USED IN CALIBRATING INSTRUMENTS LISTED ABOVE.

Calibrated and serviced quarterly by a qualified outside service firm.

(ex: Electro Fab Company)

10. FILM BADGES, DOSIMETERS, AND BIO-ASSAY PROCEDURES USED. (For film badges, specify method of calibrating and processing, or name of supplier)

None required.

11. FACILITIES AND EQUIPMENT. Describe the facilities and equipment which will be used to protect health and minimize danger to life or property and relate the use of the equipment and facilities to the operations described in Item 4. (Include a sketch or drawing when feasible)

Standard laboratory fume hood and bench facilities are used and are properly posted when in use with radipactive material.

12. RADIATION PROTECTION PROGRAM. Describe the radiation protection program including control measures. Mr. James T. Harlan, Jr., Chairman of the Research Laboratory Safety Committee (resume attached under items 6 and 7) is the designated person responsible for carrying out emergency measures. The State Department of Public Health, Berkeley, Calif. will be notified of any significant incidents. When incidents do occur the area will be isolated, personnel will be excluded and the spreading of contamination will be prevented. Appropriate steps will be taken to remove and dispose of contaminants. A qualified outside authority (ex: Dr. Gordon Locher, Western Radiation Laboratory) will be consulted when necessary.

13. WASTE DISPOSAL. If a commercial waste disposal service is employed, specify name of company. Otherwise, submit detailed description of methods which will be used for disposing of radioactive wastes and estimates of the type and amount of activity involved.

Small amounts of Carbon 14 will be disposed of to the sewer in accordance with the State Department of Public Health regulations. A qualified disposal firm (ex: Dr. Gordon Locher, Western Radiation Laboratory) will be called upon when necessary.

TORRANCE

SO-0015114

CERTIFICATE (This item must be completed by applicant)

14. The applicant and any official executing this certificate on behalf of the applicant named in Item 1, certify that all information contained herein, including any supplements attached hereto, is true and correct to the best of our knowledge and belief. If this is an application for renewal or amendment to an existing California license, and if no information is supplied with regard to any of the items of this form, such information as has been supplied in previous applications concerning such items, remains true and correct to the best of our knowledge and belief.

SHELL CHEMICAL COMPANY - TORRANCE PLANT
Applicant named in Item 1

Date _____ By: _____
G.S.Williamson - Plant Manager
Title of certifying official

TORRANCE
SO-0015115

Form RH 2552

Resume of training of W. C. Towner, Radiation Protection Officer 2/8/63

1. General Technical Background

Graduate mechanical engineer, with 9-1/2 years experience in job and instrumentation engineering. Presently, Senior Engineer with supervision responsibilities over the Instrument Engineering group and Field Instrumentation procedures and standards.

2. Training Related to Radiation Safety

a. Three day course on Radiation Safety with sealed gamma sources up to 5 curies strength with special reference to Cesium 137 conducted by Dr. Gordon L. Locher, Western Radiation Laboratory, Los Angeles, California on October 25, November 1 and 8, 1961.

b. One day in plant instruction on Radiation Safety by J. T. Harlan, Jr. Research Department, who has direct supervision of 25,000 curies of Cobalt 60 on License 4-1880-5 (E-64).

TORRANCE
SO-0015116

ATTACHMENT A

Personnel Training & Experience

James T. Harlan, Jr. - Senior Research Technologist

General Technical Background

B.S. (Chemical Engineering) California Institute of Technology (1941) plus graduate work at various universities; 21 years experience in petrochemical manufacturing operations.

ITEM 6 - A.B.C. & D. - Training Related to Radiation Utilization and Safety

(1) University of California (Extension Division, Berkeley) Nuclear Short Course (9 weeks) July-August 1956.

(2) International School of Nuclear Science and Engineering University of North Carolina, Raleigh, N.C. (4 months) February-May 1957.
Argonne National Laboratory, Lemont, Illinois (5 months) June-November 1957.

(3) Special Scientific Employee, Chemistry Division Argonne National Laboratory, Lemont, Illinois (3 months) November 1957-February 1958.

(4) Course in Health Physics and Radiation Safety (presented by Nuclear Systems in Los Angeles) (2 days, part time) February 1959.

(5) Three-day course in radiation safety presented by Western Radiation Laboratory (see attached letter from Western Radiation Laboratory to Shell Chemical Co., dated November 11,1961).

ITEM 7 - Actual Experience in Handling Radiation Sources

Source of Radiation	Description	Location	Duration	Use
Cobalt-60 Irrad. Unit	1500 curies	Argonne Natl.Lab.	5 mos.	Experimental
Fission products	Microcuries	" "	2 mos.	Training
Nuclear Reactors	Water Boiler	N.C.State Coll.	1 mo.	Training
	CP-5	Argonne Natl.Lab.	2 mos.	Training
	EBWR	" "	2 days	Training
	Argonaut	" "	1 mo.	Training
Van de Graaf Accelerator	3 Mev	Shell Develp. Co. Emeryville, Calif.	3 yrs.	Experimental
Cobalt-60 Irrad. Unit	18,600 curies	Shell Chemical Co. Torrance, Calif.	3 yrs.	Experimental

TORRANCE
SO-0015117

Richard M. Pymm - C. Mist - Research Chemist

General Technical Background

B.A. (Chemistry) Occidental College (1955); 7 years broad experience in laboratories at Shell Chemical Co., Torrance Plant.

ITEM 6 - A.B.C. & D. - Training Radiation Safety

(1) On-the-job training (approximately one month) in the use of unsealed Carbon-14 sources under the direction of Donald C. Duke, who was authorized under this licens (Amendment No.2) to supervise such work.

(2) Three-day course in radiation safety presented by Western Radiation Laboratory (see Item I B-5 above).

ITEM 7 - Actual Experience in Handling Radiation Sources

Millicurie Carbon-14 sources were handled during on-the-job training period in 1958.

STATE OF CALIFORNIA
DEPARTMENT OF PUBLIC HEALTH

APPLICATION FOR RADIOACTIVE MATERIAL LICENSE

This application is not to be used by physicians or medical institutions applying for the "human use" of radioactive materials (see instructions).

Before completing this form, familiarize yourself with the detailed instructions, Form RH 2553, and with applicable provisions of State Department of Public Health regulations: Licensing of Radioactive Materials and Standards for Protection against Radiation, California Administrative Code, Title 17, Chapter 5, Subchapter 4, Groups 2 and 3.

Items 1 and 14 must be completed for all applications. Other items must be completed as described in the instructions.

Use supplemental sheets where necessary and include any other supporting documents or information which will aid in evaluation of this application.

Provide complete, clear, and accurate information.

Submit two completed copies of each application and two copies of all supplemental and supporting material to: Bureau of Radiological Health, State Department of Public Health, 2151 Berkeley Way, Berkeley 4, California.

1. (a) NAME AND ADDRESS OF APPLICANT. (Institution, firm, hospital, individual, etc.)
SHELL CHEMICAL COMPANY
A Division of Shell Oil Company
19821 Hamilton Street
Los Angeles, California - Mailing Address: P.O.Box 211, Torrance, California

(b) STREET ADDRESS(ES) AT WHICH RADIOACTIVE MATERIAL WILL BE USED.
19821 Hamilton Street
19201 South Vermont Avenue

(c) This is an application for:
1. A new California license [X]
2. Renewal of California Radioactive Material License No. _____
3. Amendment to California Radioactive Material License No. _____

2. DEPARTMENT(S) TO USE RADIOACTIVE MATERIAL AND PREVIOUS LICENSE NUMBER(S). (Indicate issuing agency if other than California)
(a) Copolymer Plant A.E.C. License No.4-1880-4 & Calif.State Registration 010831
(b) Research Pilot Plant A.E.C. License No.4-1880-4 & Calif.State Registration 010831

3. (a) RADIOACTIVE MATERIAL (b) CHEMICAL AND/OR PHYSICAL FORM (c) POSSESSION LIMIT* (at any one time)

See Attachment

TORRANCE
SO-0015119

* Units shall be pounds for source material, grams for special nuclear material, milligrams for radium and curies or millicuries for all others.

4. DESCRIBE THE PROPOSED USE OF THE RADIOACTIVE MATERIAL (by department, when appropriate).

See attachment

5. (a) INDIVIDUAL USER(S). (Name, title and dept. of individual(s) who will use or directly supervise use of radioactive material)

W. C. Towner - Senior Engineer - Instrumentation-Engineering Department
L. J. Notter - Engineer - Instrumentation-Engineering Department

(b) RADIATION PROTECTION OFFICER. (Name of person designated as radiation protection officer)

W. C. Towner - Senior Engineer - Instrumentation-Engineering Department
~~(See attachment for Resume.)~~

TRAINING AND EXPERIENCE OF EACH INDIVIDUAL NAMED IN ITEM 5
(Radiographers should complete Form RH 2554 in addition to Items 6 and 7)

6. TYPE OF TRAINING	Where trained	Duration of Training	On the job (circle ans.)	Formal course (circle ans.)
a. Principles and practices of radiation protection including "Standards for Protection Against Radiation," California Radiation Control Regulations	Course conducted by Dr.Gordon L.Locher of Western Radiation Lab. Los Angeles,Calif.	3 days	(yes)	(yes)
	Class conducted by J.T. Harland,Shell Chemical Research Dept.	1 day	(Yes) No	(Yes) No
b. Radioactivity measurement standardization and monitoring techniques and instruments	Ditto	Ditto	Ditto Yes No	Yes No
c. Mathematics and calculations basic to the use and measurement of radioactivity	Ditto	Ditto	Ditto Yes No	Yes No
d. Biological effects of radiation	Ditto	Ditto	Ditto Yes No	Yes No

7. EXPERIENCE WITH RADIOACTIVITY. (Actual use of radioisotopes or equivalent experience)

NAME	ISOTOPE	MAXIMUM AMOUNT	WHERE EXPERIENCE WAS GAINED (License No(s) if any)	DURATION OF EXPERIENCE	TYPE OF USE
Towner	Cesium 137	1000 Millicuries	-Shell Chemical Co. A.E.C.4-1880-4	16 months	density
Notter	"	"	" "	32 months	"

TORRANCE
SO-0015120

8. RADIATION DETECTION INSTRUMENTS. (Use supplemental sheets if necessary)

TYPE OF INSTRUMENTS (Include make and model number of each)	NUMBER AVAILABLE	RADIATION DETECTED	SENSITIVITY RANGE (mr/hr or equivalent)	WINDOW THICKNESS (mg/cm^2 where applicable)	USE Monitoring, surveying, measuring)
Tracerlab SU-1H	**1**	**Beta Gamma**	**0-1500**	**-----**	**Monitoring, and surveying.**

9. METHOD, FREQUENCY, AND STANDARDS USED IN CALIBRATING INSTRUMENTS LISTED ABOVE.

Calibrated and serviced quarterly by an outside service company (ex: Electro Fab Company)

10. FILM BADGES, DOSIMETERS, AND BIO-ASSAY PROCEDURES USED. (For film badges, specify method of calibrating and processing, or name of supplier)

None required.

11. FACILITIES AND EQUIPMENT. Describe the facilities and equipment which will be used to protect health and minimize danger to life or property and relate the use of the equipment and facilities to the operations described in Item 4. (Include a sketch or drawing when feasible)

None involved.

12. RADIATION PROTECTION PROGRAM. Describe the radiation protection program including control measures.

(a) Leak tests are performed at six month intervals (April and October) by a qualified outside service (ex: Western Radiation Laboratory)

(b) Initial surveys are performed by a qualified outside service (ex: Western Radiation Laboratory).

(c) Servicing and repairs to source holders are performed by a qualified outside service. (ex: Ohmart Corporation). (see attachment for balance of No.12)

13. WASTE DISPOSAL. If a commercial waste disposal service is employed, specify name of company. Otherwise, submit detailed description of methods which will be used for disposing of radioactive wastes and estimates of the type and amount of activity involved.

No waste material is involved.

TORRANCE
SO-0015121

Form RH 2552

CERTIFICATE (This item must be completed by applicant)

14. The applicant and any official executing this certificate on behalf of the applicant named in Item 1, certify that all information contained herein, including any supplements attached hereto, is true and correct to the best of our knowledge and belief. If this is an application for renewal or amendment to an existing California license, and if no information is supplied with regard to any of the items of this form, such information as has been supplied in previous applications concerning such items, remains true and correct to the best of our knowledge and belief.

SHELL CHEMICAL COMPANY - TORRANCE PLANT
Applicant named in Item 1

Date _____ By: _____

G. S. Williamson
Plant Manager
Title of certifying official

TORRANCE
SO-0015122

Form RH 2552

3. (a) RADIOACTIVE MATERIAL	(b) CHEMICAL AND/OR PHYSICAL FORM	(c) POSSESSION LIMIT * (At any one time)
Cesium 137	One Sealed Source 1000 Millicuries (U.S. Radium Corp.Model LAB-111D)	1000 Millicuries
(b) Cesium 137	One Sealed Source 500 Millicuries (U.S. Radium Corp.Model LAB-236C1-5A)	500 Millicuries
(c) Cesium 137	One Sealed Source 1200 Millicuries (U.S. Radium Corp.Model LAB-236C1-6)	1200 Millicuries
(d) Cesium 137	Four Sealed Sources 1000 Millicuries each (U.S. Radium Corp.Model LAB-236C1-6)	4000 Millicuries

---

4. Item 3 (a) Copolymer Dept. - used in Ohmart Corporation Model SHRD-2 source holder for measurement of liquid density in tube.

Item 3 (b) Research Pilot Plant - used on a tank for density measurement of contents according to Ohmart Corporation's drawings B-1142 and Shell Chemical Company drawings YT-6099-5 and YT-6109-2.

Item 3 (c) Copolymer Plant - used in Ohmart Corporation Model ASR-4 source holder for determining carbon loading in a slurry of bead carbon and water in a pipe line.

Item 3 (d) 3 Copolymer Plant and 1 Research Pilot Plant - used in Ohmart Corporation Model ASR-3 source holder for measuring density of material flowing in pipes.

---

12. (d) Plant Manager G. S. Williamson and Radiation Protection Officer, W. C. Towner are designated to carry out emergency measures. The Bureau of Radiological Health, State Department of Public Health, Berkeley, California will be notified in the event of an emergency.

(e) Precautions are taken to install source holders in the "closed" position and placed in "open" position after pipe is filled with process material. When source holder is removed from pipe, it will be placed in the closed position before removal.

TORRANCE
SO-0015123

Resume of training of W. C. Towner, Radiation Protection Officer 2/6/63

1. General Technical Background

Graduate mechanical engineer, with 9-1/2 years experience in job and instrumentation engineering. Presently, Senior Engineer with supervision responsibilities over the Instrument Engineering group and Field Instrumentation procedures and standards.

2. Training Related to Radiation Safety

a. Three day course on Radiation Safety with sealed gamma sources up to 5 curries strength with special reference to Cesium 137 conducted by Dr. Gordon L. Locher, Western Radiation Laboratory, Los Angeles, California on October 25, November 1 and 8, 1961.

b. One day in plant instruction on Radiation Safety by J. T. Harlan, Research Department, who has direct supervision of 25000 curies of Cobalt 60 on License 4-1880-5 (E-64).

Resume of training of L. J. Notter, Engineer - Instrumentation

1. General Technical Background

Mr. Notter has a Bachelor of Science in Chemistry and has 7 years experience in the Laboratory, 1-1/2years in the Technological Department, 2 years in the Operation Department and 1-1/2 years as an Instrument Engineer.

2. Training Related to Radiation Safety

a. Three day course on Radiation Safety with sealed gamma sources up to 5 curies strength with special reference to Cesium 137 conducted by Dr. Gordon L. Locher, Western Radiation Laboratory, Los Angeles, California on October 25, November 1 and 8, 1961.

b. One day in plant instruction on Radiation Safety by J. T. Harlan, Research Department, who has direct supervision of 25,000 curies of Cobalt 60 on License 4-1880-5 (E-64)

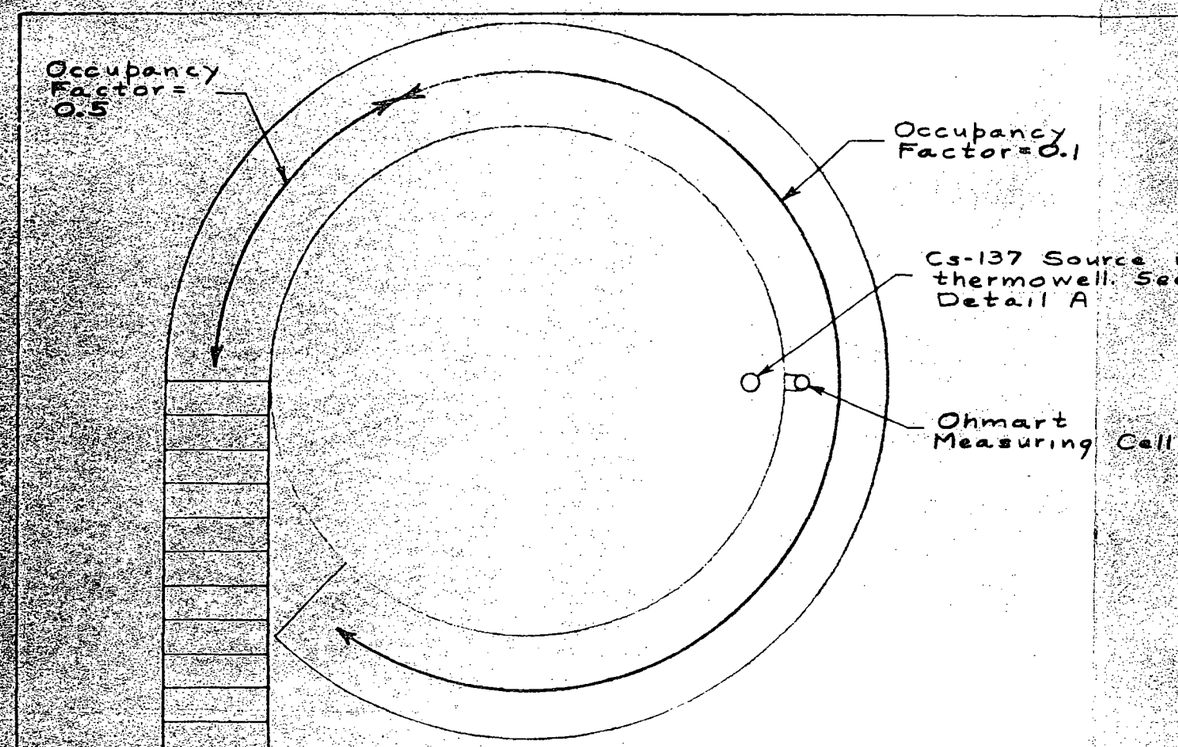

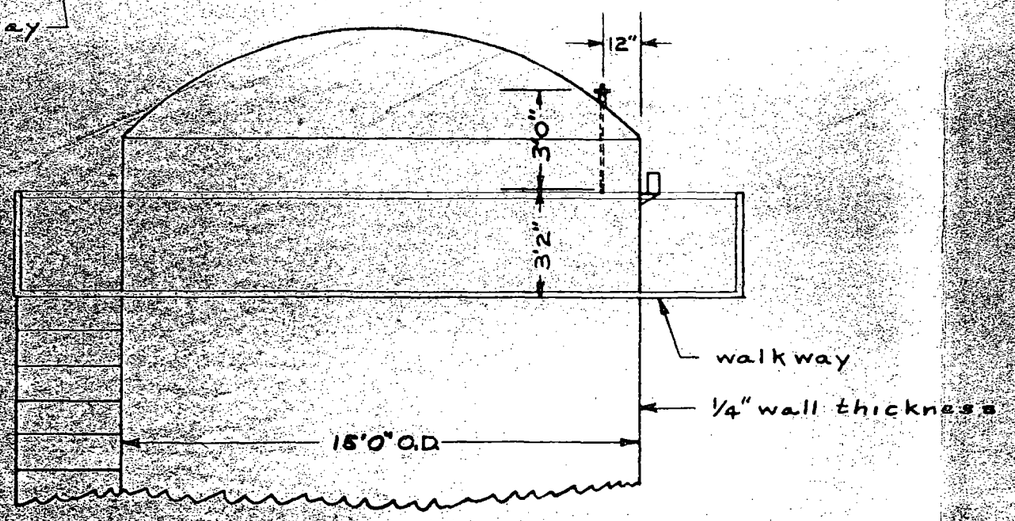

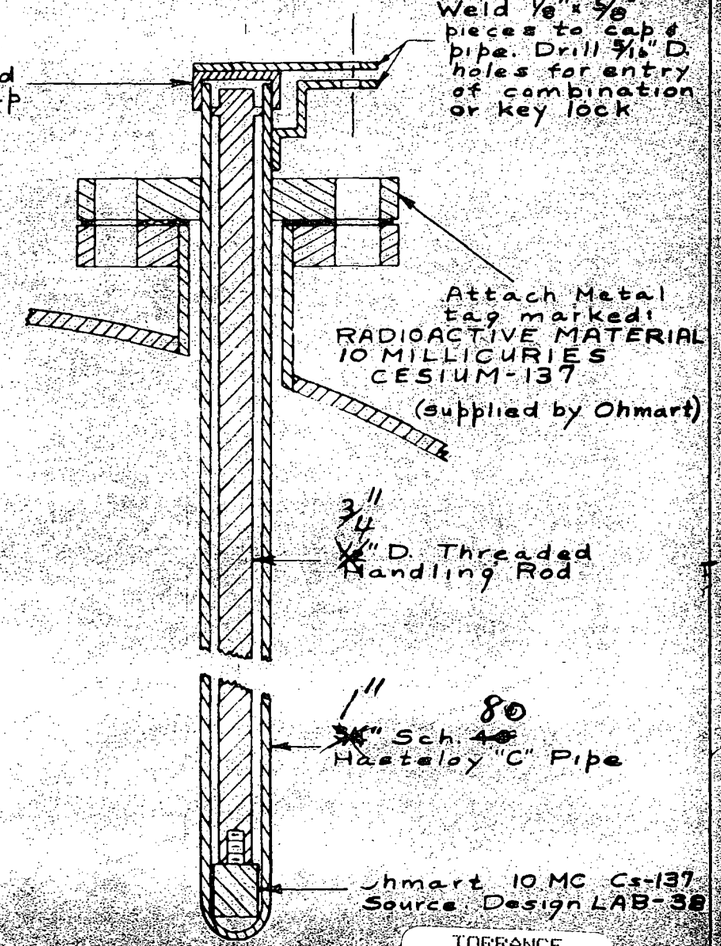

DETAIL A

TORRANCE
SO-0015125

THE OHMART CORPORATION
CINCINNATI, OHIO

Typical Information Required by AEC for Radioisotope License

MODEL		OHMART, S.O.	
DRAWN BY	H.L.C.	CHECKED	
CUSTOMER			
P.O. NO.		SCALE	
DATE	2-21-56	DWG.	B 1142

PARTIALLY SCANNED OVERSIZE ITEM(S)

See document # 2141267
for partially scanned image(s).

EMULSION POLYMERIZATION PILOT PLANT
TORRANCE SO-0015126 to SO-0015127

For complete hardcopy version of the oversize document
contact the Region IX Superfund Records Center at
(415) 536-2000

Record of Payments

6/22/64 420
ca July 65 420
6/23/66 420 acct. 21106-50-00

TORRANCE
SO-0015128

NKG

SHELL CHEMICAL COMPANY

A DIVISION OF SHELL OIL COMPANY
P. O. BOX 211
TORRANCE, CALIFORNIA

May 21, 1963

Licensing Division
Bureau of Radiological Health
State Department of Public Health
2151 Berkeley Way
Berkeley 4, California

Attention: Mr. J. Ward

Gentlemen:

Re: Interim Permission to Possess 100 mc Hydrogen-3

The Research Laboratory located in Shell Chemical Company's Torrance Plant has just received a Packard Instrument Company Tri-Carb 314EX-2 liquid scintillation counting system. This instrument has been installed in a temporary location while planning and construction of a permanent low-level radioactive tracer laboratory is under way.

Our application for a license which would include the possession and use of 5 curies of hydrogen-3 and 100 millicuries of carbon-14 is in preparation at the present time. This application has been discussed with Messrs. Ault and Miller of the Los Angeles City Health Department, Occupational and Radiological Division, who recently visited us.

The Packard Tri-Carb instrument will provide the basis for a research program which we hope will be varied and effective. The first subject to be studied involves the use of hydrogen-3 tagged methanol to prepare tritium-labelled polymer samples. It is on the basis of initial experiments of this sort carried out under the supervision and with the assistance of Dr. B. E. Gordon of Shell Development Company, Emeryville, that our purchase of the Packard instrument has been justified.

To enable us to continue this program during the period when our license application mentioned above is under review by you, we request permission to possess and use 100 millicuries of hydrogen-3 in the form of methanol with a specific activity of about 0.5 mc/ml.

This tagged methanol would be received initially from Shell Development Company, Emeryville, in 20 mc lots. To carry out the experiments, 0.2 mc samples would be measured in a syringe and mixed with 1-pint samples of a pilot plant product (polymer dissolved in a hydrocarbon).

TORRANCE
SO-0015086

One-half of each polymer solution sample would be coagulated by mixing with an excess of untagged methanol and the methanol discarded to the chemical sewer. This sewer system leaves the Torrance Plant with a total flow of 1000 to 2000 gpm. The coagulated polymer would have a negligible amount of tritium chemically bonded to the polymer chain (less than 0.0005 mc per gram). These polymer samples would then be counted for activity using the Packard Tri-Carb unit. The unused polymer solution will ultimately be coagulated in alcohol and the combined alcohol disposed of to the chemical sewer as discussed above. Any insoluble solid or liquid samples containing radioactivity will be properly stored for later disposal.

The Research Laboratory has a Radiation Safety Subcommittee consisting of three members: D. W. Fraga (Chairman), Mrs. M. W. Hansen (Secretary), and J. T. Harlan (Radiation Protection Officer for Unsealed Sources). An outline of the backgrounds of these persons, who would be charged with maintaining radiation safety practices in accordance with California law, is attached.

The actual handling of samples would be done by pilot plant personnel who have been instructed in the radiation safety principles involved. A portion of an existing laboratory has been posted and reserved for handling of the radioactive samples. The original tagged methanol would be locked in a file cabinet when not in use, and the residual active polymer solution samples will be stored in posted cabinets in the posted laboratory until disposal.

We would appreciate receiving at an early date your interim permission to possess and use a maximum of 100 millicuries of hydrogen-3, as outlined above, pending approval of our license for larger amounts. If you should require further information, we will be glad to provide it.

Yours very truly,

Original Signed by G. S. Williamson

G. S. Williamson
Plant Manager

Attachment

cc - Addressee (w/attachment)

bc - N. R. Legge (w/attach)
G. R. Harrington "
J. D. Morton " ← Copy To
R. C. Mobley ~~" ← Copy To~~
W. C. Towner "
J. T. Harlan "
Res. Lab. Radiation Safety Subcommittee (w/attach)
Eng. File 602-1E (w/o attach)
" " 601-2E "
Central Files "

TORRANCE
SD-0015087

May 1963

RESEARCH LABORATORY RADIATION SAFETY SUBCOMMITTEE
BACKGROUND AND TRAINING OF MEMBERS

I. Donald W. Fraga - Chairman

A. General Technical Background

B.S. (Chemistry) University of California at Berkeley (1953); 10 years laboratory experience in analytical chemistry.

B. Training Related to Radiation Utilization and Safety

Physics 128, Measurement of Radiations, University of California 1952.

II. Marion W. Hansen - Secretary

A. General Technical Background

B.S. (Chemistry) University of California at Los Angeles (1955); 6 years laboratory experience specializing in analytical chemistry.

B. Training Related to Radiation Utilization and Safety

1. On-the-job training (approximately 5 months, Sept. 1959 - Feb. 1960) in the use of unsealed radioisotopes under supervision of Health Physics Department at Lawrence Radiation Laboratory and two physicians conducting research at Donner Laboratory (University of California at Berkeley).

2. Four days of instruction in applications and techniques of liquid scintillation counting under supervision of B. E. Gordon at Shell Development Company, Emeryville, California (April 23-26, 1963).

C. Experience with Radioactivity

On-the-job experience (Sept. 1959 - Feb. 1960) at Donner Laboratory-Lawrence Radiation Laboratory in extraction of yttrium from 5 curies of strontium; use of radioisotopes in biological research; measurement of radioisotopes in animal tissue.

TORRANCE
SD-0015088

III. James T. Harlan, Jr. - Radiation Protection Officer (Unsealed Sources)

A. General Technical Background

B.S. (Chemical Engineering) California Institute of Technology (1941) plus graduate work at various universities; 22 years experience in petrochemical manufacturing operations.

B. Training Related to Radiation Utilization and Safety

1. University of California (Extension Division, Berkeley) Nuclear Short Course (9 weeks) July-August 1956.

2. International School of Nuclear Science and Engineering University of North Carolina, Raleigh, N.C. (4 months) February-May 1957.
Argonne National Laboratory, Lemont, Illinois (5 months) June-November 1957.

3. Special Scientific Employee, Chemistry Division Argonne National Laboratory, Lemont, Illinois (3 months) November 1957-February 1958.

4. Course in Health Physics and Radiation Safety (presented by Nuclear Systems in Los Angeles) (2 days, part time) February 1959.

5. Three-day course in radiation safety presented by Western Radiation Laboratory.

C. Experience in Handling Radiation Sources

Source of Radiation	Description	Location	Duration	Use
Cobalt-60 Irrad. Unit	1500 curies	Argonne Natl.Lab.	5 mos.	Experimental
Fission products	microcuries	" "	2 mos	Training
Nuclear Reactors	Water Boiler	N.C.State Coll.	1 mo.	Training
	CP-5	Argonne Natl.Lab.	2 mos.	Training
	EBWR	" "	2 days	Training
	Argonaut	" "	1 mo.	Training
Van de Graaf Accelerator	3 Mev	Shell Develp. Co. Emeryville,Calif.	3 yrs.	Experimental
Cobalt-60 Irrad. Unit	18,600 curies	Shell Chemical Co. Torrance, Calif.	3 yrs.	Experimental

TORRANCE
SO-0015089

NKG

SHELL CHEMICAL COMPANY

A DIVISION OF SHELL OIL COMPANY
P. O. BOX 211
TORRANCE, CALIFORNIA

June 11, 1963

Superseded

Los Angeles City Health Department
Occupational and Radiological Health Division
111 East First Street
Los Angeles 12, California

Gentlemen:

As discussed in a telephone conversation between your Mr. B. A. Ault and our Mr. J. T. Harlan, we are enclosing for your information a copy of our letter dated May 21, 1963 to the Licensing Division, Bureau of Radiological Health, State Department of Public Health, Berkeley, California. This letter requests interim permission to possess and use 100 millicuries of Hydrogen-3.

You will be interested to know that we are in the process of forwarding our formal application to the State for a license to possess and use 5 curies of Hydrogen-3 and 100 millicuries of carbon-14. This license, when approved, will replace the interim authorization requested in the attached letter.

Yours very truly,

Original Signed by G. S. Williamson

G. S. Williamson
Plant Manager

Attachment
JTH/en
bc - (w/o attachment)
N. R. Legge
G. R. Harrington
J. D. Morton ← Copy To
R. C. Mobley
W. C. Towner
J. T. Harlan
Eng. File 602-1E
" " 602-2E
Central Files

TORRANCE
SO-0015077

IMPORTANT NOTICE

Enclosed is your new Health Permit Registration Certificate, which should be displayed at your place of business.

Renewal fees are due and payable on the date shown on the enclosed Certificate. A renewal notice will be mailed when this fee is due.

DO NOT SEND ANY PAYMENT AT THIS TIME

Please call this office if you have any questions concerning the above.

WALTER C. PETERSON, CITY CLERK
Tax and Permit Division

Room One, City Hall
MAdison 6-9271

Form 542.184 (Rev.)

THIS HEALTH REGULATION FEE CERTIFICATE MUST BE DISPLAYED AT PLACE OF BUSINESS

N

H184735	RADIATION FACILITY	11861
ACCOUNT NO.	TYPE OF BUSINESS	DATE ISSUED

HEALTH REGULATION FEE CERTIFICATE

CITY OF LOS ANGELES

BOARD OF HEALTH COMMISSIONERS

THIS CERTIFICATE IS GOOD UNTIL VOIDED OR REVOKED

George M. Uhl, M.D.
HEALTH OFFICER

THIS REGULATION FEE IS DUE AND PAYABLE	DELINQUENT IF NOT PAID ON OR BEFORE
JANUARY 1ST. EACH YEAR	FEBRUARY 28TH. EACH YEAR

BA 19821 S FIGUEROA ST TOR
SHELL CHEMICAL CO /A CORP/
P O BOX 211
TORRANCE

H184735-975
ACCOUNT NUMBER

COUNTERSIGNED BY:
Dan O. Hoye
CONTROLLER

NOTIFY THE CITY CLERK IN WRITING OF ANY CHANGE IN OWNERSHIP OR ADDRESS - ROOM 1, CITY HALL, LOS ANGELES 12 - READ REVERSE SIDE

TORRANCE
SO-0015078

NKG

SHELL CHEMICAL COMPANY

A DIVISION OF SHELL OIL COMPANY

P. O. BOX 211

TORRANCE, CALIFORNIA

June 27, 1963

Licensing Division
Bureau of Radiological Health
State Department of Public Health
2151 Berkeley Way
Berkeley 4, California

Gentlemen:

Re: Application for Radioactive Material License

We are enclosing our application for a California Radioactive Material License. This license will replace and amend our existing U. S. AEC Licenses Nos. 4-1880-2 and 4-1880-4.

This application will also supersede two previous applications, Nos. 0559 and 0560 for the same general coverage which were submitted to you under cover of our letter dated February 8, 1963. Drawings, Ohmart Corporation B-1142, and Shell Chemical Company YT-6099-5 and YT-6109-2, attached to the two original applications are pertinent to the present application but have not been resubmitted. Hence you will wish to refer to this earlier communication.

The present application, which differs somewhat from the previous applications, has been prepared on the basis of suggestions from Messrs. Ault and Miller of the Los Angeles City Health Department, Occupational and Radiological Health Division, who recently visited us. We understand that they have discussed our situation with you and that you are in general agreement with the method of applying for a single license to cover all radioisotope usage at Shell Chemical's Torrance Plant. The reason for combining all of our radioisotope work in one license is to ensure uniform safety practices throughout our plant and to provide adequate administrative control. In particular, we feel that having two Radiation Protection Officers, one for sealed sources and one for unsealed sources, will result in effective control in each of these two basically different areas.

To simplify communication between our installation and yourselves, two copies of all correspondence to us should be addressed:

Shell Chemical Company
P. O. Box 211
Torrance, California
Attention: Mr. G. S. Williamson, Plant Manager

TORRANCE
SO-0015094

We would also like to point out that a new Packard Instrument Company Tri-Carb Liquid Scintillation Counter has been received and installed in the Research Laboratory. This instrument is, of course, the key to our tritium and Carbon-14 research and radiation safety program involving unsealed sources which is outlined in the attached application.

If you should require further information related to our license application, we shall be glad to provide it.

Very truly yours,

GSWilliamson

G. S. Williamson
Plant Manager

Attachment

cc: Addressee (w/attachment)

JTH: jam

bc: N. R. Legge (w/attachment)
M. L. Sagenkahn (w/attachment)
G. R. Harrington (w/attachment)
J. D. Morton (w/attachment) ← Copy To
R. C. Mobley (w/attachment)
W. C. Towner (w/attachment)
J. T. Harlan (w/attachment)
Eng. File 602-1E (w/o attachment)
Eng. File 601-2E (w/o attachment)
Central Files (w/o attachment)

TORRANCE
SO-0015095

STATE OF CALIFORNIA
DEPARTMENT OF PUBLIC HEALTH

APPLICATION FOR RADIOACTIVE MATERIAL LICENSE

This application is not to be used by physicians or medical institutions applying for the "human use" of radioactive materials (see instructions).

Before completing this form, familiarize yourself with the detailed instructions, Form RH 2553, and with applicable provisions of State Department of Public Health regulations: Licensing of Radioactive Materials and Standards for Protection against Radiation, California Administrative Code, Title 17, Chapter 5, Subchapter 4, Groups 2 and 3.

Items 1 and 14 must be completed for all applications. Other items must be completed as described in the instructions.

Use supplemental sheets where necessary and include any other supporting documents or information which will aid in evaluation of this application.

Provide complete, clear, and accurate information.

Submit two completed copies of each application and two copies of all supplemental and supporting material to: Bureau of Radiological Health, State Department of Public Health, 2151 Berkeley Way, Berkeley 4, California.

1. (a) NAME AND ADDRESS OF APPLICANT. (Institution, firm, hospital, individual, etc.)
Shell Chemical Co.
A division of Shell Oil Co.
19821 Hamilton St., Los Angeles, Cal.
(Mailing Address: P.O.Box 211, Torrance, Cal.)

(b) STREET ADDRESS(ES) AT WHICH RADIOACTIVE MATERIAL WILL BE USED.
19821 Hamilton St., Los Angeles, Calif.
(This address represents Shell Chemical Company's entire Torrance plant)

(c) This is an application for:
1. A new California license [X]
2. Renewal of California Radioactive Material License No. _____
3. Amendment to California Radioactive Material License No. _____

2. DEPARTMENT(S) TO USE RADIOACTIVE MATERIAL AND PREVIOUS LICENSE NUMBER(S). (Indicate issuing agency if other than California)
(I) Sealed sources - Engineering Department; USAEC License No. 4-1880-4
(II) Unsealed sources - Research Laboratory; USAEC License No. 4-1880-2

3. (a) RADIOACTIVE MATERIAL (b) CHEMICAL AND/OR PHYSICAL FORM (c) POSSESSION LIMIT* (at any one time)

See Attachment (Item 3)

TORRANCE
SO-0015096

* Units shall be pounds for source material, grams for special nuclear material, milligrams for radium and curies or millicuries for all others.

4. DESCRIBE THE PROPOSED USE OF THE RADIOACTIVE MATERIAL (by department, when appropriate).

See Attachment (Item 4)

5. (a) INDIVIDUAL USER(S). (Name, title and dept. of individual(s) who will use or directly supervise use of radioactive material)

See Attachment (Item 5)

(b) RADIATION PROTECTION OFFICER. (Name of person designated as radiation protection officer)

See Attachment (Item 5)

TRAINING AND EXPERIENCE OF EACH INDIVIDUAL NAMED IN ITEM 5
(Radiographers should complete Form RH 2554 in addition to Items 6 and 7)

6. TYPE OF TRAINING	Where trained	Duration of Training	On the job (circle ans.)	Formal course (circle ans.)
a. Principles and practices of radiation protection including "Standards for Protection Against Radiation," California Radiation Control Regulations	See Attachment (Items 6 and 7 Combined)		Yes No	Yes No
b. Radioactivity measurement standardization and monitoring techniques and instruments	See Attachment (Items 6 and 7 Combined)		Yes No	Yes No
c. Mathematics and calculations basic to the use and measurement of radioactivity	See Attachment (Items 6 and 7 Combined)		Yes No	Yes No
d. Biological effects of radiation	See Attachment (Items 6 and 7 Combined)		Yes No	Yes No

7. EXPERIENCE WITH RADIOACTIVITY. (Actual use of radioisotopes or equivalent experience)

NAME	ISOTOPE	MAXIMUM AMOUNT	WHERE EXPERIENCE WAS GAINED (License No(s) if any)	DURATION OF EXPERIENCE	TYPE OF USE

See Attachment (Items 6 and 7 Combined)

TORRANCE
SO-0015097

8. RADIATION DETECTION INSTRUMENTS. (Use supplemental sheets if necessary)

TYPE OF INSTRUMENTS (Include make and model number of each)	NUMBER AVAILABLE	RADIATION DETECTED	SENSITIVITY RANGE (mr/hr or equivalent)	WINDOW THICKNESS (mg/cm^2 where applicable)	USE Monitoring, surveying, measuring)

See Attachment (Item 8)

9. METHOD, FREQUENCY, AND STANDARDS USED IN CALIBRATING INSTRUMENTS LISTED ABOVE.

See Attachment (Item 9)

10. FILM BADGES, DOSIMETERS, AND BIO-ASSAY PROCEDURES USED. (For film badges, specify method of calibrating and processing, or name of supplier)

None required.

11. FACILITIES AND EQUIPMENT. Describe the facilities and equipment which will be used to protect health and minimize danger to life or property and relate the use of the equipment and facilities to the operations described in Item 4. (Include a sketch or drawing when feasible)

See Attachment (Item 11)

12. RADIATION PROTECTION PROGRAM. Describe the radiation protection program including control measures.

See Attachment (Item 12)

13. WASTE DISPOSAL. If a commercial waste disposal service is employed, specify name of company. Otherwise, submit detailed description of methods which will be used for disposing of radioactive wastes and estimates of the type and amount of activity involved.

See Attachment (Item 13)

TORRANCE

SO-0015098

CERTIFICATE (This item must be completed by applicant)

14. The applicant and any official executing this certificate on behalf of the applicant named in Item 1, certify that all information contained herein, including any supplements attached hereto, is true and correct to the best of our knowledge and belief. If this is an application for renewal or amendment to an existing California license, and if no information is supplied with regard to any of the items of this form, such information as has been supplied in previous applications concerning such items, remains true and correct to the best of our knowledge and belief.

Shell Chemical Company - Torrance Plant
Applicant named in Item 1

Date June 27/63 By: G S Williamson
G. S. Williamson
Plant Manager
Title of certifying official

TORRANCE
SO-0015099

Form RH 2552

June 27, 1963

ATTACHMENTS TO
APPLICATION FOR RADIOACTIVE MATERIAL LICENSE

ITEM 3. RADIOACTIVE MATERIALS

(a) RADIOACTIVE MATERIAL	(b) CHEMICAL AND/OR PHYSICAL FORM	(c) POSSESSION LIMIT* (At any one time)
I. Sealed Sources		
A. Cesium 137	One Sealed Source 1000 Millicuries (U. S. Radium Corp. Model LAB-111-D)	1000 Millicuries
B. Cesium 137	One Sealed Source 500 Millicuries (U. S. Radium Corp. Model LAB-236C1-5A)	500 Millicuries
C. Cesium 137	One Sealed Source 1200 Millicuries (U. S. Radium Corp. Model LAB-236C1-6)	1200 Millicuries
D. Cesium 137	Four Sealed Sources 1000 Millicuries each (U. S. Radium Corp. Model LAB-236C1-6)	4000 Millicuries
II. Unsealed Sources		
A. Hydrogen - 3	Various tritiated organic compounds (e.g., polymers, monomers, catalysts, etc.)	5 Curies
B. Carbon - 14	Various tagged organic compounds (e.g., polymers, monomers, catalysts, etc.)	100 Millicuries

ITEM 4. USE OF RADIOACTIVE MATERIAL

I. Sealed Sources Listed in Item 3

A. Copolymer Department - used in Ohmart Corporation Model SHRD-2 source holder for measurement of liquid density in tube.

B. Research Pilot Plant - used on a tank for density measurement of contents according to Ohmart Corporation's drawings B-1142 and Shell Chemical Company drawings YT-6099-5 and YT-6109-2.

C. Copolymer Plant - used in Ohmart Corporation Model ASR-4 source holder for determining carbon loading in a slurry of bead carbon and water in a pipe line.

TORRANCE
SO-0015100

D. Copolymer Plant (3) and Research Pilot Plant (1) - used in Ohmart Corporation Model ASR-3 source holder for measuring density of material flowing in pipes.

II. Unsealed Sources Listed in Item 3

The tagged compounds will be used in research and development studies (laboratory and pilot plant) of a variety of chemical reactions of interest in the manufacture of synthetic rubber (for example, polymerization, reaction mechanisms, mixing, etc.).

ITEM 5. (a) INDIVIDUAL USERS

I. Sealed Sources

A. W. C. Towner - Senior Engineer - Instrumentation - Engineering Department

B. L. J. Notter - Engineer - Instrumentation - Engineering Department

II. Unsealed Sources

A. Marion W. Hansen - Research Chemist - Research Laboratory

B. Richard M. Pymm - Research Chemist - Research Laboratory

C. James T. Harlan, Jr. - Senior Research Technologist - Research Laboratory

(b) RADIATION PROTECTION OFFICERS

I. Sealed Sources

A. W. C. Towner - Senior Engineer - Instrumentation - Engineering Department

II. Unsealed Sources

B. J. T. Harlan, Jr. - Senior Research Technologist - Research Laboratory

ITEMS 6 AND 7. TYPE OF TRAINING - EXPERIENCE WITH RADIOACTIVITY

I. Sealed Sources

A. W. C. Towner, Radiation Protection Officer (Sealed Sources)

1. General Technical Background

a. Graduate mechanical engineer, with 10-1/2 years experience in job and instrumentation engineering. Presently, Senior

Engineer with supervision responsibilities over the Instrument Engineering group and Field Instrumentation procedures and standards.

2. Training Related to Radiation Utilization and Safety

   a. Three-day course on Radiation Safety with sealed gamma sources up to 5 curies strength with special reference to Cesium 137 conducted by Dr. Gordon L. Locher, Western Radiation Laboratory, Los Angeles, California, on October 25, November 1 and 8, 1961.

   b. One day in-plant instruction on Radiation Safety by J. T. Harlan, Research Department, who had supervision of 18,000 curies of Cobalt 60 on License 4-1880-5 (E-64) for three years.

3. Experience with Radioactivity (Item 7)

   a. Cesium 137 1000 MC Shell Chemical (Torrance) USAEC Lic. 4-1880-4 19 Months Densitometer

B. L. J. Notter

1. General Technical Background

   a. Mr. Notter has a Bachelor of Science in Chemistry and has seven years experience in the Laboratory, 1-1/2 years in the Technological Department, two years in the Operation Department and 1-1/2 years as an Instrument Engineer.

2. Training Related to Radiation Utilization and Safety

   a. Three-day course on Radiation Safety with sealed gamma sources up to 5 curies strength with special reference to Cesium 137 conducted by Dr. Gordon L. Locher, Western Radiation Laboratory, Los Angeles, California, on October 25, November 1 and 8, 1961.

   b. One day in plant instruction on Radiation Safety by J. T. Harlan, Research Department, who had supervision of 18,000 curies of Cobalt 60 on License 4-1880-5 (E-64) for three years.

3. Experience with Radioactivity (Item 7)

   a. Cesium 137 1000 MC Shell Chemical (Torrance), USAEC Lic. 4-1880-4 35 Months Densitometer

TORRANCE
SO-0015102

II. Unsealed Sources

A. Marion W. Hansen - Research Chemist

1. General Technical Background

a. B. S. (Chemistry) University of California at Los Angeles (1955); six years laboratory experience specializing in analytical chemistry.

2. Training Related to Radiation Utilization and Safety

a. On-the-job training (approximately five months, September, 1959 - February, 1960) in use of unsealed radioisotopes under supervision of Health Physics Department at Lawrence Radiation Laboratory and two physicians conducting research at Donner Laboratory (University of California at Berkeley).

b. Four days of instruction in applications and techniques of liquid scintillation counting under supervision of B. E. Gordon at Shell Development Company, Emeryville, California (April 23 - 26, 1963).

3. Experience with Radioactivity (Item 7)

a. On-the-job experience (September, 1959 - February, 1960) at Donner Laboratory - Lawrence Radiation Laboratory in extraction of tritium from 5 curies of strontium; use of radioisotopes in biological research; measurement of radioisotopes in animal tissue.

B. Richard M. Pymm - Research Chemist

1. General Technical Background

a. B. A. (Chemistry) Occidental College (1955); seven years broad experience in laboratories at Shell Chemical Company, Torrance Plant.

2. Training Related to Radiation Utilization and Safety

a. On-the-job training (approximately one month) during 1958 in the use of unsealed Carbon-14 sources under the direction of Donald C. Duke, who was authorized under A.E.C. License No. 4-1880-2 to supervise such work.

b. Three day course on radiation safety with sealed gamma sources up to 5 curries presented by Western Radiation Laboratory, Los Angeles, on October 25, November 1 and 8, 1961.

TORRANCE
SO-0015103

3. Experience with Radioactivity (Item 7)

   a. Carbon-14 sources up to 3 millicuries were handled during the above (2a) on-the-job training period in 1958.

C. James T. Harlan, Jr. - Radiation Protection Officer (Unsealed Sources)

1. General Technical Background

   a. B. S. (Chemical Engineering) California Institute of Technology (1941) plus graduate work at various universities; 22 years experience in petrochemical manufacturing operations.

2. Training Related to Radiation Utilization and Safety

   a. University of California (Extension Division, Berkeley) Nuclear Short Course (nine weeks) July-August, 1956.

   b. International School of Nuclear Science and Engineering, University of North Carolina, Raleigh, North Carolina (four months), February-May, 1957.

      Argonne National Laboratory, Lemont, Illinois (five months), June-November, 1957.

   c. Special Scientific Employee, Chemistry Division, Argonne National Laboratory, Lemont, Illinois (three months), November, 1957-February, 1958.

   d. Course in Health Physics and Radiation Safety (presented by Nuclear Systems in Los Angeles) (two days part time), February, 1959.

   e. Three-day course in radiation safety presented by Western Radiation Laboratory, October 25, November 1 and 8, 1961.

3. Experience in Handling Radiation Sources (Item 7)

Source of Radiation	Description	Location	Duration	Use
Cobalt-60 Irrad.Unit	1500 curies	Argonne Natl.Lab.	5 mos.	Experimental
Fission Products	Microcuries	Argonne Natl.Lab.	2 mos.	Training
Nuclear Reactors	Water Boiler	N.C.State Coll.	1 mo.	Training
	CP-5	Argonne Natl.Lab.	2 mos.	Training
	EBWR	Argonne Natl.Lab.	2 days	Training
	Argonaut	Argonne Natl.Lab.	1 mo.	Training
Van de Graaf Accelerator	3 Mev	Shell Devlp. Co. Emeryville, Calif.	3 yrs.	Experimental
Cobalt-60 Irrad.Unit	18,600 curies	Shell Chemical Co. Torrance, Calif.	3 yrs.	Experimental

TORRANCE
SO-0015104

ITEM 8. RADIATION DETECTION INSTRUMENTS

TYPE	NUMBER AVAILABLE	RADIATION DETECTED	SENSITIVITY RANGE (mr/hr or equivalent)	WINDOW THICKNESS (mg/cm^2 where applicable)	USE (Monitoring, surveying, measuring)
I. For Use with Sealed Sources					
Tracerlab SU-1H	1	Beta Gamma	0-1500	0.85 mg/cm^2	Monitoring, surveying
II. For Use with Unsealed Sources					
Packard Tricarb Liquid Scintillation Counter 314EX-2	1	Alpha, Beta Gamma			Analytical work, assaying, wipe tests
Tracerlab SU-3C	1	Beta, Gamma	10-20,000 cpm	<4 mg/cm^2	Surveying for C^{14} and higher energy radiation

ITEM 9. CALIBRATION OF INSTRUMENTS

I. Sealed Sources

A. Tracerlab SU-1H

1. Serviced quarterly by qualified outside firm (e.g., Electro-Fab Company)

II. Unsealed Sources

A. Packard Tricarb

1. Calibrated daily with standard samples and serviced by Packard Instrument Company.

B. Tracerlab SU-3C

1. Serviced annually by qualified outside firm (e.g., Electro-Fab Company)

ITEM 11. FACILITIES AND EQUIPMENT

I. Sealed Sources

A. The units as produced and installed by the manufacturer require no additional facilities or equipment for normal use. Surveys, testing and servicing (see Item 12) is done by qualified outside organizations who provide all necessary equipment. However,

relocation of sealed sources due to change of service within the plant will be supervised by the Radiation Protection Officer (Sealed Sources).

II. Unsealed Sources

A. Concentrated tagged reagents are currently stored in a locked refrigerator or in a locked file cabinet. Dilute tritiated samples are properly labelled and are stored in cabinets marked "CAUTION -- RADIOACTIVE MATERIALS" near the pilot plant low level radioactivity handling area. Two low level radioactivity handling areas are currently set up near the pilot plant and in the main Research Laboratory. Each is a section of a laboratory plainly marked in accord with Title 17 California Administrative Code.

Ultimately, a separate laboratory area for preparation, counting, and storage of unsealed sources will be used as far as possible for all radioisotope handling work. Currently in the planning stage, it will be equipped with our Packard Tricarb Liquid Scintillation counting unit as well as with adequate standard laboratory equipment.

ITEM 12. RADIATION PROTECTION PROGRAM

Shell Chemical Management has delegated technical responsibility for overall radiation safety in the Torrance Plant to the Radioisotopes Committee. In addition, two Radiation Protection Officers have been appointed, one concerned with Sealed Sources (W. C. Towner) and one concerned with Unsealed Sources (J. T. Harlan, Jr.). The Radioisotopes Committee includes in its membership: (a) both Radiation Protection Officers, (b) the Research Laboratory Radiation Safety Subcommittee, and (c) Head Fire and Safety Inspector. If other groups within the Torrance Plant should undertake use of radioisotopes in the future, they will also be represented on the Radioisotopes Committee. This committee is responsible for coordinating radiation protection programs throughout the Torrance Plant for both sealed and unsealed sources.

I. Sealed Sources

A. Leak tests are performed at six-month intervals (April and October) by a qualified outside service (e.g., Western Radiation Laboratory).

B. Initial surveys are performed by a qualified outside service (e.g., Western Radiation Laboratory).

C. Servicing and repairs to source holders are performed by a qualified outside service (e.g., Ohmart Corporation).

D. Precautions are taken to install source holders in the "closed" position and placed in the "open" position after pipe is filled with process material. When source holder is removed from pipe, it will be placed in the "closed" position before removal.

E. Plant Manager, G. S. Williamson, and Radiation Protection Officer for Sealed Sources, W. C. Towner, are authorized to carry out emergency measures where sealed sources are concerned. The Bureau of Radiological Health, State Department of Public Health, Berkeley, California, will be notified in case of emergency as provided by law.

F. In case contamination should result from an accident, the decontamination would be done by qualified persons from an outside company such as Tracerlab.

II. Unsealed Sources

A. The Research Laboratory Radiation Safety Subcommittee is part of the general safety program in the Research Laboratory which includes several similar subcommittees (e.g., Chemical Safety, Mechanical Safety). The Radiation Safety Subcommittee consists of the Radiation Protection Officer for Unsealed Sources and two experienced professional staff members at least one of whom has been licensed to handle radioactive materials. The Subcommittee reviews all proposed programs involving radioactive tracers, arranges for the adequate instruction of personnel involved in such work, passes on the suitability of facilities and practices, and sees that appropriate written procedures are prepared and followed. The Secretary maintains the log of radioisotope receipts and disposals.

The current membership of the Research Laboratory Radiation Safety Subcommittee is as follows:

Chairman: Donald W. Fraga - Group Leader
Secretary: Marion W. Hansen - Research Chemist
James T. Harlan - Senior Research Technologist and Radiation Protection Officer for Unsealed Sources.

A qualified consultant (Dr. Gordon Locher - Western Radiation Laboratory) is retained for advice and assistance with unusual situations. Dr. Locher has made surveys and wipe tests in connection with the 18,000 curie Cobalt-60 unit owned by the Research Laboratory from 1959-1962 and is very familiar with Shell Chemical facilities and practices Dr. B. E. Gordon of Shell Development Company, Emeryville, California, a well-qualified and highly-experienced authority on radioisotope techniques, assists in planning and initial work when new types of applications are undertaken.

Research Director, N. R. Legge, and Radiation Protection Officer for Unsealed Sources, J. T. Harlan, Jr., are designated to carry out emergency measures where unsealed sources are concerned. The Bureau of Radiological Health, State Department of Public Health, Berkeley, California, will be notified in event of emergency as provided by law.

ITEM 13. WASTE DISPOSAL

I. Sealed Sources

A. Normally there is no waste disposal problem. However, in the event that a Sealed Source should become damaged, the source will be returned to the manufacturer for repair or disposal or disposed of by a qualified outside service.

II. Unsealed Sources

A. Water soluble Hydrogen-3 and Carbon-14 compounds are disposed to the chemical sewer in accord with Section 30287, Title 17. There are two sewer outlets from the Torrance Plant, (a) the sanitary sewer (a small flow which will not be used to dispose of radioactivity), and (b) the chemical, oil and storm sewers which leave the plant through a waste treatment unit. The flow in the latter system varies from 1,000 gpm to 2,000 gpm, averaging 1,500 gpm. Consequently, the concentration of radioactivity based on the total permissible daily amount which can be placed in the sewer will never approach the maximum allowable concentration.

B. Insoluble radioactive waste materials (expected to be very small) will be accumulated in suitable labelled containers and periodically disposed of to a licensed disposal agency (e.g., Tracerlab). Volatile components of such insoluble radioactive wastes will be vented in accord with Section 30269, Article 5.

TORRANCE
SO-0015108

STATE OF CALIFORNIA
DEPARTMENT OF PUBLIC HEALTH
RADIOACTIVE MATERIAL LICENSE
Supplementary Sheet

JUN 17 12 47 PM '63

License Number _____

Amendment No. 1 to
USAEC License No. 4-1880-2

Shell Chemical Company
Division of Shell Oil Company
19821 Hamilton Street
Los Angeles, California

Attention: G. S. Williamson:

In accordance with a letter signed by G. S. Williamson dated May 21, 1963, AEC license numbered 4-1880-2 is amended as follows:

Subitem B of item 8 is amended to read 100 millicuries.

Condition 15 is amended to add:

Letter signed by G. S. Williamson dated May 21, 1963.

TORRANCE PLT.
JUN 17 1963
MGR.
SUPT. OPRS.
MAINT.
STY.
BUTA.
COPOLY
SHIP
SUPT. TECH
TECH
ENGR.
LAB
TREAS.
P & IR
Purch-Stores
CEN. F.
PLS. HDL.
DATE ANS.
ANS. BY
FILE NO.

MRL saw 7/16/63

TORRANCE
SO-0015109

For the State Department of Public Health

Date June 13, 1963 by

John M. Heslep, Chief
Bureau of Radiological Health
2151 Berkeley Way, Berkeley 4, California

3181 Form RH 2551

STATE OF CALIFORNIA—HEALTH AND WELFARE AGENCY

EDMUND G. BROWN, Governor

DEPARTMENT OF PUBLIC HEALTH
BERKELEY

July 15, 1963

To: Shell Chemical Company
A Division of Shell Oil Company
19821 Hamilton Street
Los Angeles, California

Attn: Mr. G. S. Williamson, Plant Mgr.

This is to advise you that a California radioactive material license will be issued to you upon receipt of the license fee.

You should remit the license fee of $ 420.00 as a check or money order payable to the California Department of Public Health. Please return one copy of this form with your remittance.

The number of your license will be 055971 and all relevant correspondence with us should bear this reference.

For the Department of Public Health

John M. Heslop

John M. Heslop, Chief
Bureau of Radiological Health

TORRANCE
SO-0015093

RH 2563
Rev. Oct. 1962

July 19, 1963

Dept. of Bldg. & Safety
Boiler Division, City of Los Angeles
Room 295, City Hall
Los Angeles 12, California

Gentlemen:

We are enclosing installation permit covering the installation of one (1) pressure vessel (V-3847, 12.75" O.D. x 3'-0" long).

Our check No. 48900 0718 dated July 18, 1963 in the amount of $2.00 is enclosed to cover the cost of this permit.

Yours very truly,

Original Signed by G. R. Harrington

G. R. Harrington
Manager Engineering

PK:vmv

Enclosures (2)

bc: D. E. Schramm
Engr. File 602-1E
Engr. File 608-22E (W.O. 8384-00) Copy For
Central Files

TORRANCE
SH-0004013

Application

INSTALLATION PERMIT

for

Boilers & Unfired Pressure Vessels

Date July 19, 1963

DEPARTMENT OF BUILDING AND SAFETY
Boiler Division
City of Los Angeles
Room 295, City Hall
Los Angeles 12, Calif.

Equipment will be ready for inspection on: August 6, 1963

Application is herewith made for permit to install

Styrene Dryer - Shell Equipment No. V-3847
(Type of Equipment)

at 19201 So. Vermont Avenue (Street address and room number) Shell Chemical Company (Name of Establishment)

This equipment will be erected and operated in compliance with the Ordinances of the City of Los Angeles.

Contractor Shell Chemical Co.

Address P.O. Box 211, Torrance, Calif.

Telephone FA 1-2340

Owner Shell Chemical Co.

Address P.O. Box 211, Torrance, Calif.

Telephone FA 1-2340

Permit Fee — $2.00 for each and every piece of equipment as shown in Sec. 54.23 of the Los Angeles Municipal Code, Ordinance No. 77,000.

MAdison 4-5211 Station 2361

INSPECTION FEE TO BE PAID BY: Shell Chemical Co.

TORRANCE
SH-0004014

B&S Form M-23 R3.61

TORRANCE PLT.

JUL 2 8 1963

	MGR.	
	SUPT. OPRS.	
	MAINT.	
	STY.	
	BUTA.	
	COPOLY	
	SHIP	
	SUPT. TECH	
	TECH	
	ENGR.	
	LAB	
	TREAS.	
	P S IR	
	Purch-Stores	
	CEN. F.	
	PLS. HDL.	
	DATE ANS.	
	ANS. BY	
	FILE NO.	

TORRANCE

SO-0015090

State of California
DEPARTMENT OF PUBLIC HEALTH

RADIOACTIVE MATERIAL LICENSE

Pursuant to the California Administrative Code, Title 17, Chapter 5, Subchapter 4, Group 2, Licensing of Radioactive Material, and in reliance on statements and representations heretofore made by the licensee, a license is hereby issued authorizing the licensee to receive, use, possess, transfer or dispose of radioactive material listed below; and to use such radioactive material for the purpose(s) and at the place(s) designated below. This license is subject to all applicable rules, regulations and orders of the Department of Public Health now or hereafter in effect and to any conditions specified in this license.

Licensee	
1. Name: Shell Chemical Company A Division of Shell Oil Company	3. License number: 0559-71
2. Address: 19821 Hamilton Street Los Angeles, California	4. Expiration date: July 25, 1965
	5. Inspection agency: Los Angeles City Health Department

6. Radioactive material (element and mass number)	7. Chemical and/or physical form	8. Maximum quantity of material which licensee may possess at any one time
A. Cesium 137	A. Sealed source (U. S.Radium Corporation Model LAB-111-D).	A. One source of 1 curie.
B. Cesium 137	B. Sealed source (U.S. Radium Corporation Model LAB 236C1-5A).	B. One source of 500 millicuries.
C. Cesium 137 See Page 2	C. Sealed source (U.S. Radium Corporation Model LAB 236C1-6).	C. One source of 1.2 curies.

9. Authorized use

A. To be used in an Ohmart Corporation Model SHRD-2 source holder for the measurement of liquid density in a tube.

B. To be used as a component of a density gauge in accordance with Ohmart Corporation drawing B-1142 and Shell Chemical Company drawings YT-6099-5 and YT-6109-2.

C. To be used in an Ohmart Corporation Model ASR-4 source holder for determining carbon loading in a slurry of bead carbon and water in a pipe line.

CONDITIONS

10. Unless otherwise specified, the authorized place of use is the licensee's address stated in Item 2 above.

11. This license is subject to an annual fee of four hundred twenty (420) dollars due and payable on the anniversary of the date of issue of this license, July 25, 1963.

12. Radioactive material as described in subitems A through D of items 6, 7, 8, and 9 of this license shall be used by, or under the supervision of, W. C. Towner or L. J. Notter.

13. Radioactive material as described in subitems E and F of items 6, 7, 8, and 9 of this license shall be used by, or under the supervision of, Marion W. Hansen, Richard M. Pymm, or James T. Harlan, Jr.

14. Except as specifically provided otherwise by this license, the licensee shall possess and use radioactive material described in Items 6, 7 and 8 of this license in accordance with statements, representations and procedures contained in the following documents:
    (a) two applications dated February 11, 1963.
    (b) application dated June 27, 1963, and supporting material submitted therewith.

15. Radioactive material as sealed sources shall not be opened.

TORRANCE

SO-0015091

STATE OF CALIFORNIA
DEPARTMENT OF PUBLIC HEALTH

RADIOACTIVE MATERIAL LICENSE
Supplementary Sheet

License Number 0559-71

Continued

6. Radioactive material (element and mass number)	7. Chemical and/or physical form	8. Maximum quantity of material which licensee may possess at any one time.
D. Cesium 137	D. Sealed sources (U. S. Radium Corporation Model LAB 236C1-6).	D. 4 sources of 1 curie each.
E. Hydrogen 3	E. Any	E. 5 curies.
F. Carbon 14	F. Any	F. 100 millicuries.

9. Authorized use.

D. To be used in Ohmart Corporation Model ASR-3 source holders as components of density gauges.

E and F. To be used for research and development as defined in section 30175 (n) of the California Radiation Control Regulations.

CONDITIONS

16. Maintenance, repair and initial radiation survey of devices containing radioactive material and leak testing, installation, replacement and disposal of sealed sources containing radioactive material used in devices shall be performed only by the Ohmart Corporation or persons specifically licensed to perform these tasks.

17. Bioassays for tritium shall be performed on individuals using tritium in accordance with the following schedule:
    (a) If the amount of tritium used at any one time is less than 100 millicuries, the bioassays shall be performed occasionally.
    (b) If the amount of tritium used at any one time is 100 millicuries or greater, but less than 8 curies, the bioassays shall be performed weekly.
    (c) If the amount of tritium used at any one time is 8 curies or more, the bioassays shall be performed daily.

TORRANCE
SO-0015092

For the State Department of Public Health

Date July 25, 1963 by John M. Heslep

John M. Heslep, Chief
Bureau of Radiological Health
2151 Berkeley Way, Berkeley 4, California

Form RH 2551

NKG

SHELL CHEMICAL COMPANY

A DIVISION OF SHELL OIL COMPANY

P. O. BOX 211

TORRANCE, CALIFORNIA

August 19, 1963

Licensing Division
Bureau of Radiological Health
State Department of Public Health
2151 Berkely Way
Berkely 4, California

Gentlemen:

Re: Interpretation of Radioactive Materials
License No. 0559-71

In reviewing the above license, we find that there is ambiguity in Item 16 under "Conditions". This item seems to indicate that an Ohmart representative or a licensed person would have to be present if we desire to relocate a sealed source, even though this relocation is purely operational in nature.

It was our intent in our application dated June 27, 1963, on Page 6, Item 11 of the attachment, that our Radiation Protection Officer (Sealed Sources) could supervise the relocation of sealed sources within our authorized place of use when this relocation is operational and does not involve maintenance of the units.

We have two uses for sealed sources: (1) those permanently installed in Ohmart Corporation source holders as specified in A, C, D, under Item 9 of our license, and (2) a source on the end of a threaded handling rod as described in the Ohmart Corporation Drawing B-1142, as specified in B, Item 9, of our license.

For operational convenience we wish to be able to relocate the complete Ohmart units when required and to be able to insert the rod source in a reactor, as described in Shell Chemical Company Drawings YT-6099-5 and YT-6109-2. The rod source is inserted in a protective container when not in the reactor.

Please confirm that Item 16 does not restrict our use of the two types of sources as described above by requiring supervision other than by our own Radiation Protection Officer (Sealed Sources).

TORRANCE

SO-0015084

We also note that our mailing address, Post Office Box 211, Torrance, California, 90509, is not included on our actual license. Delay in mail communications could occur if correspondence is addressed to our location address, Item 2 of our license, rather than to our mailing address.

We would appreciate the use of our mailing address for future correspondence and your clarification of Item 16 of our license.

Very truly yours,
SHELL CHEMICAL COMPANY

Original Signed by G. S. Williamson

G. S. Williamson
Plant Manager

LJN:vmv

cc: N. R. Legge
M. L Sagenkahn
G. R. Harrington
J. D. Morton Copy Porter
R. C. Mobley
W. C. Towner
J. T. Harlen
L. A. City Health Dept., Attn: Jack Rogers
Engr. Files 602-1E
Engr. Files 601-2E
Central Files (2)

TORRANCE
SO-0015085

NKG

SHELL CHEMICAL COMPANY
A DIVISION OF SHELL OIL COMPANY
P. O. BOX 211
TORRANCE, CALIFORNIA

October 23, 1963

Licensing Division
Bureau of Radiological Health
State Department of Public Health
2151 Berkeley Way
Berkeley 4, California

Re: Radioactive Materials License
No. 0359-71 - Bioassay Requirements

The above license requires (Condition 17) that bioassays for tritium shall be performed on individuals using tritium according to a fixed schedule depending on the amount of tritium used at any one time. We wish to propose an amendment which revises the wording to make the performance of bioassays dependent on the judgment of the radiochemist and radiation safety officer involved. Your comments on the subject will be appreciated and will serve as a basis for our submission of a formal amendment application covering this and the items already discussed in our letter of August 19, 1963, and yours of September 5, 1963.

The various divisions of Shell Oil Company have for many years operated under AEC licenses, none of which required bioassays under specified conditions. This was based on the recognition that every responsible radiochemist would perform a bioassay when, in his judgment, one was indicated (e.g., accidental spill, ingestion, etc.). Under these arrangements the Shell laboratories have operated safely and successfully without the restriction of bioassays inflexibly based on amount of radioactive material handled as specified in Condition 17. It has always been Shell policy to take protective safety measures over and above legal requirements where specific hazards make such measures desirable.

It is our opinion that Condition 17, as now worded in the above license, is too rigid in relating the need for bioassays solely to amount of radioisotope handled and does not spell out the primary objective for such examinations. We feel sure that you will agree that the manner in which an isotope is handled rather than the amount is the primary factor which determines probability of contamination. Admittedly, the probability is also greater when very large amounts are actively handled than where trace levels are used. However, we feel that Condition 17 is undesirably restrictive in the general case, in that a rigid schedule of required bioassay frequency for tritium leading to a substantial cost load could discourage the use of tritium as a tracer. This would be unfortunate in view of the fact that tritium is one of the most useful radioisotopes.

TORRANCE
SO-0015082

We therefore propose in lieu of Condition 17 as set forth in our license that a condition reading substantially as follows be substituted:

Amended Condition 17: "If, during the performance of experimental work involving tritium, a condition arises which, in the judgment of the laboratory worker, the supervising radiochemist, or the Radiation Protection Officer for Unsealed Sources, might result in contamination of personnel, bioassays will be performed as often as necessary to establish the existence or non-existence of abnormal body burden. If the amount of tritium actually involved in experimental work at one time exceeds 100 millicuries, bioassays shall be performed on individuals carrying out the work at least once in three months at a period of maximum exposure".

Such wording would, we believe, reflect more realistically the situation as it exists in the modern radiochemical laboratory.

We have already established a regular procedure for obtaining bioassays from a qualified outside firm and several samples are in process at present.

Thank you for your assistance and cooperation in working out these questions regarding our license.

Very truly yours,
SHELL CHEMICAL COMPANY

Original Signed by R. M. Stager

Original Signed by G. S. Williamson

G. S. Williamson
Plant Manager

JTH/en

bc - B. E. Gordon, Shell Development - Emeryville
L. A. City Health Dept., Attn: Mr. Jack Rogers
N. R. Legge
M. L. Sagenkahn
G. R. Harrington
J. D. Morton ← **Copy To**
R. C. Mobley
W. C. Towner/L. J. Notter
J. T. Harlan
Engr. Files 602-1E
" " 602-2E
Central Files

TORRANCE
SO-0015083

AIR POLLUTION CONTROL DISTRICT · COUNTY OF LOS ANGELES
434 SOUTH SAN PEDRO STREET, LOS ANGELES 13, CALIFORNIA. MADISON 9-4711

APPLICATION

W. S. LARSON

AUTHORITY TO CONSTRUCT AND PERMIT TO OPERATE

INSTRUCTIONS

A. A FILING FEE OF $10.00 MUST ACCOMPANY EACH APPLICATION. CHECKS OR MONEY ORDERS SHOULD BE MADE PAYABLE TO THE AIR POLLUTION CONTROL DISTRICT, COUNTY OF LOS ANGELES.

B. THIS APPLICATION MUST BE FILLED OUT COMPLETELY AND MUST BE FILED IN TRIPLICATE.

C. APPLICATIONS ARE INCOMPLETE UNLESS ACCOMPANIED BY DUPLICATE COPIES OF ALL PLANS, SPECIFICATIONS AND DRAWINGS REQUIRED. DETAILS REQUIRED FOR SPECIFIC EQUIPMENT ARE LISTED ON SEPARATE FORMS WHICH ARE AVAILABLE UPON REQUEST.

D. THIS APPLICATION MUST BE SIGNED BY A RESPONSIBLE MEMBER OF THE ORGANIZATION THAT IS TO OPERATE THE EQUIPMENT FOR WHICH APPLICATION IS MADE. INCOMPLETE APPLICATIONS ARE NOT ACCEPTABLE.

ENGINEERING DIVISION
ROBERT L. CHASS
DIRECTOR OF ENGINEERING

APPLICATION INFORMATION

1. PERMIT TO BE ISSUED TO (BUSINESS LICENSE NAME OF CORPORATION, COMPANY, INDIVIDUAL OWNER OR GOVERNMENTAL AGENCY THAT IS TO OPERATE THE EQUIPMENT): Shell Chemical Company, A Division of Shell Oil Company

2. MAILING ADDRESS: P. O. Box 211 Torrance
NUMBER STREET CITY OR COMMUNITY ZONE

3. ADDRESS AT WHICH THE EQUIPMENT IS TO BE OPERATED: 15201 S. Vermont Los Angeles
NUMBER STREET CITY OR COMMUNITY ZONE

4. TYPE OF ORGANIZATION: CORPORATION [X] PARTNERSHIP [ ] INDIVIDUAL OWNER [ ] GOVERNMENTAL AGENCY [ ]

5. GENERAL NATURE OF BUSINESS: Manufacture of Synthetic Rubber

6. EQUIPMENT DESCRIPTION. PURSUANT TO THE PROVISIONS OF THE STATE HEALTH AND SAFETY CODE AND THE RULES AND REGULATIONS OF THE AIR POLLUTION CONTROL DISTRICT, APPLICATION IS HEREBY MADE FOR AUTHORITY TO CONSTRUCT AND PERMIT TO OPERATE THE FOLLOWING EQUIPMENT: Two new reactors, V-5341 and V-5342, and one relocated blowdown vessel V-5349 to be added to S-2105 latex facilities. Enforcement Inspection No. 5.

7. ESTIMATED COST OF EQUIPMENT OR OF ALTERATION: AIR POLLUTION CONTROL EQUIPMENT: $ 1,200 BASIC EQUIPMENT: $ 28,000

8. PRESENT STATUS OF EQUIPMENT (CHECK AND COMPLETE APPLICABLE ITEMS):

		ESTIMATE STARTING DATE	ESTIMATE COMPLETION DATE
[X]	CONSTRUCTION OR INSTALLATION NOT STARTED.	2/15/64	5/1/64
[ ]	CONSTRUCTION OR INSTALLATION PARTLY COMPLETED.		
[ ]	CONSTRUCTION COMPLETED.		
[ ]	EQUIPMENT IS TO BE ALTERED.		
[ ]	EQUIPMENT IS PARTLY ALTERED.		
[ ]	EQUIPMENT HAS BEEN ALTERED.		
[ ]	TRANSFER OF OPERATOR, OWNER OR LESSEE.		
[ ]	TRANSFER OF LOCATION.		

9. IF THIS EQUIPMENT HAD A PREVIOUS WRITTEN PERMIT GIVE NAME OF CORPORATION, COMPANY OR INDIVIDUAL OWNER THAT OPERATED THIS EQUIPMENT AND STATE PREVIOUS AIR POLLUTION CONTROL DISTRICT PERMIT NUMBER, IF KNOWN.

NAME PERMIT NUMBER 16093 32730

10. SIGNATURE OF RESPONSIBLE MEMBER OF FIRM: → *Original Signed by M. L. Sagenkahn*

DATE OF APPLICATION:

11. TYPE OR PRINT NAME AND OFFICIAL TITLE OF PERSON SIGNING THIS APPLICATION.
NAME M. L. Sagenkahn
TITLE Superintendent Technical
PHONE NUMBER PA 1 2340

A-

VALIDATION (A.P.C.D. USE ONLY)

TORRANCE
SH-0006854

16-50D5 R9-60-1 Form 400-A

JOB DESCRIPTION

ADDITION OF TWO REACTORS AND ONE BLOWDOWN VESSEL
TO S-2105 LATEX FACILITIES

W.O. 6643-00

Two new 4,975 gallon reactors which will be numbered V-5341 and V-5342 will be added to the existing S-2105 latex facilities. V-3364 will be relocated from the 3300 area to the 5300 area and will serve as blowdown V-5349. Mixers on the foregoing vessels will have mechanical seals.

TORRANCE
SH-0006855

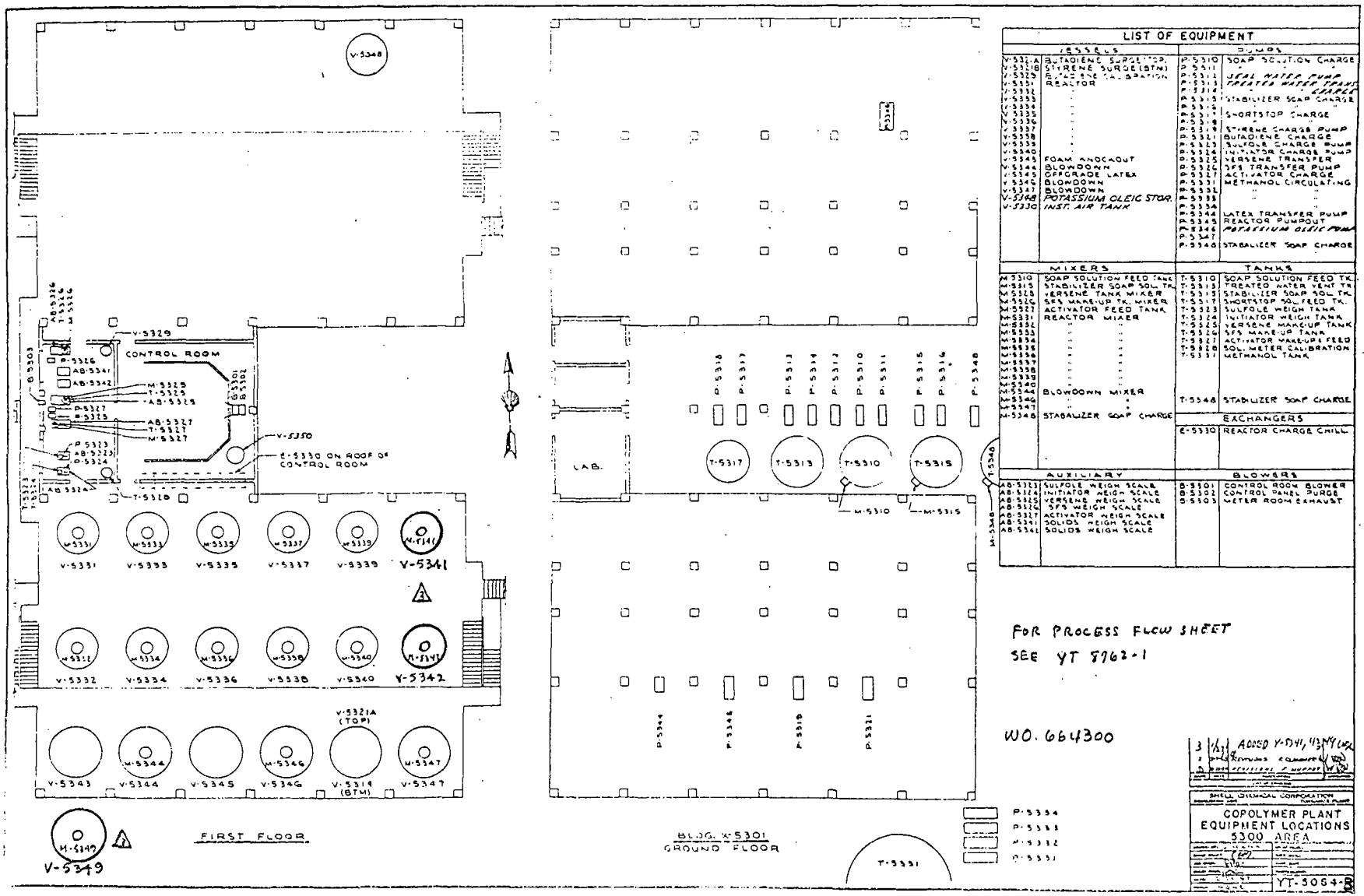

TORRANCE
SH-0006856

PARTIALLY SCANNED OVERSIZE ITEM(S)

See document # 2141267
for partially scanned image(s).

PROCESS FLOW
TORRANCE SH-0006857

For complete hardcopy version of the oversize document contact the Region IX Superfund Records Center at (415) 536-2000

AIR POLLUTION CONTROL DISTRICT • COUNTY OF LOS ANGELES
434 SOUTH SAN PEDRO STREET, LOS ANGELES 13, CALIFORNIA. MADISON 9-4711

APPLICATION W. S. LARSON

AUTHORITY TO CONSTRUCT AND PERMIT TO OPERATE

INSTRUCTIONS

A. A FILING FEE OF $10.00 MUST ACCOMPANY EACH APPLICATION. CHECKS OR MONEY ORDERS SHOULD BE MADE PAYABLE TO THE AIR POLLUTION CONTROL DISTRICT, COUNTY OF LOS ANGELES.

B. THIS APPLICATION MUST BE FILLED OUT COMPLETELY AND MUST BE FILED IN TRIPLICATE.

C. APPLICATIONS ARE INCOMPLETE UNLESS ACCOMPANIED BY DUPLICATE COPIES OF ALL PLANS, SPECIFICATIONS AND DRAWINGS REQUIRED. DETAILS REQUIRED FOR SPECIFIC EQUIPMENT ARE LISTED ON SEPARATE FORMS WHICH ARE AVAILABLE UPON REQUEST.

D. THIS APPLICATION MUST BE SIGNED BY A RESPONSIBLE MEMBER OF THE ORGANIZATION THAT IS TO OPERATE THE EQUIPMENT FOR WHICH APPLICATION IS MADE. INCOMPLETE APPLICATIONS ARE NOT ACCEPTABLE.

ENGINEERING DIVISION
ROBERT L. CHASS
DIRECTOR OF ENGINEERING

APPLICATION INFORMATION

1. PERMIT TO BE ISSUED TO (BUSINESS LICENSE NAME OF CORPORATION, COMPANY, INDIVIDUAL OWNER OR GOVERNMENTAL AGENCY THAT IS TO OPERATE THE EQUIPMENT): Shell Chemical Company, A Division of Shell Oil Company

2. MAILING ADDRESS:
NUMBER P. O. Box 211 STREET — Torrance CITY OR COMMUNITY — ZONE

3. ADDRESS AT WHICH THE EQUIPMENT IS TO BE OPERATED:
NUMBER 19201 — STREET S. Vermont — CITY OR COMMUNITY Los Angeles — ZONE

4. TYPE OF ORGANIZATION: CORPORATION [X] PARTNERSHIP [ ] INDIVIDUAL OWNER [ ] GOVERNMENTAL AGENCY [ ]

5. GENERAL NATURE OF BUSINESS: Manufacture of Synthetic Rubber

6. EQUIPMENT DESCRIPTION. PURSUANT TO THE PROVISIONS OF THE STATE HEALTH AND SAFETY CODE AND THE RULES AND REGULATIONS OF THE AIR POLLUTION CONTROL DISTRICT, APPLICATION IS HEREBY MADE FOR AUTHORITY TO CONSTRUCT AND PERMIT TO OPERATE THE FOLLOWING EQUIPMENT: Alteration of Copolymer flare system by connection of relief valves on reactors V-5341 and V-5342, and blowdown V-5349 through knockout vessel V-5343. Referenced Inspection No. 2.

7. ESTIMATED COST OF EQUIPMENT OR OF ALTERATION: AIR POLLUTION CONTROL EQUIPMENT: $ - BASIC EQUIPMENT: $ -

8. PRESENT STATUS OF EQUIPMENT (CHECK AND COMPLETE APPLICABLE ITEMS):

		Estimate Starting Date	Estimate Completion Date
[X]	CONSTRUCTION OR INSTALLATION NOT STARTED.	2/15/64	5/1/64
[ ]	CONSTRUCTION OR INSTALLATION PARTLY COMPLETED.		
[ ]	CONSTRUCTION COMPLETED.		
[ ]	EQUIPMENT IS TO BE ALTERED.		
[ ]	EQUIPMENT IS PARTLY ALTERED.		
[ ]	EQUIPMENT HAS BEEN ALTERED.		
[ ]	TRANSFER OF OPERATOR, OWNER OR LESSEE.		
[ ]	TRANSFER OF LOCATION.		

9. IF THIS EQUIPMENT HAD A PREVIOUS WRITTEN PERMIT GIVE NAME OF CORPORATION, COMPANY OR INDIVIDUAL OWNER THAT OPERATED THIS EQUIPMENT AND STATE PREVIOUS AIR POLLUTION CONTROL DISTRICT PERMIT NUMBER, IF KNOWN.
NAME — PERMIT NUMBER 21173

10. SIGNATURE OF RESPONSIBLE MEMBER OF FIRM: → *Original Signed by M. L. Sagenkahn* — DATE OF APPLICATION:

11. TYPE OR PRINT NAME AND OFFICIAL TITLE OF PERSON SIGNING THIS APPLICATION.
NAME M. L. Sagenkahn
TITLE Superintendent Technical
PHONE NUMBER PA 1 2340

A-

VALIDATION (A.P.C.D. USE ONLY)

TORRANCE
SH-0006845

16-5005 R9-60-1 Form 400-A

JOB DESCRIPTION

CONNECTION OF V-5341, AND V-5349 TO COPOLYMER FLARE THROUGH KNOCKOUT VESSEL V-5343

W. O. 6643-00

Associated with the installation of new reactors V-5341 and V-5342, and relocation of blowdown vessel V-5349 for the S-2105 latex unit, will be the provision of suitable relief valves and connection to the Copolymer flare system through knockout vessel V-5343.

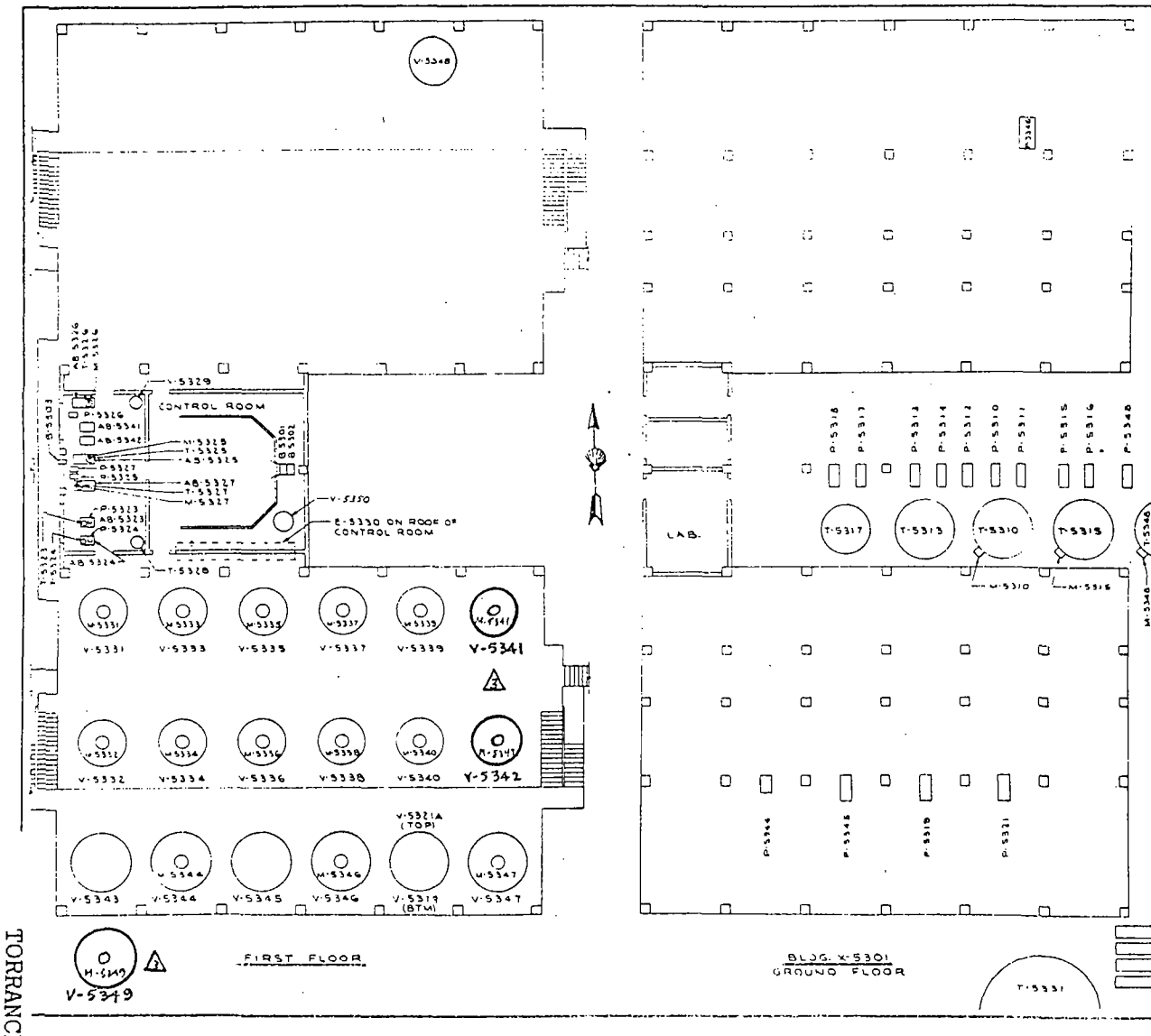

LIST OF EQUIPMENT

VESSELS		PUMPS	
V-5321A	BUTADIENE SURGE (TOP)	P-5310	SOAP SOLUTION CHARGE
V-5321B	STYRENE SURGE (BTM)	P-5311	" "
V-5329	BUTADIENE CALIBRATION	P-5312	SEAL WATER PUMP
V-5331	REACTOR	P-5313	TREATED WATER TRANS
V-5332	"	P-5314	" " CHARGE
V-5333	"	P-5315	STABILIZER SOAP CHARGE
V-5334	"	P-5316	" "
V-5335	"	P-5317	SHORTSTOP CHARGE
V-5336	"	P-5318	" "
V-5337	"	P-5319	STYRENE CHARGE PUMP
V-5338	"	P-5321	BUTADIENE CHARGE
V-5339	"	P-5323	SULFOLE CHARGE PUMP
V-5340	"	P-5324	INITIATOR CHARGE PUMP
V-5343	FOAM KNOCKOUT	P-5325	VERSENE TRANSFER
V-5344	BLOWDOWN	P-5326	SFS TRANSFER PUMP
V-5345	OFFGRADE LATEX	P-5327	ACTIVATOR CHARGE
V-5346	BLOWDOWN	P-5331	METHANOL CIRCULATING
V-5347	BLOWDOWN	P-5332	" "
V-5348	POTASSIUM OLEIC STOR.	P-5333	" "
V-5330	INST. AIR TANK	P-5334	" "
		P-5344	LATEX TRANSFER PUMP
		P-5345	REACTOR PUMPOUT
		P-5346	POTASSIUM OLEIC PUMP
		P-5347	" "
		P-5348	STABILIZER SOAP CHARGE

MIXERS		TANKS	
M-5310	SOAP SOLUTION FEED TANK	T-5310	SOAP SOLUTION FEED TK.
M-5315	STABILIZER SOAP SOL. TK.	T-5313	TREATED WATER VENT TK.
M-5325	VERSENE TANK MIXER	T-5315	STABILIZER SOAP SOL. TK.
M-5326	SFS MAKE-UP TK. MIXER	T-5317	SHORTSTOP SOL. FEED TK.
M-5327	ACTIVATOR FEED TANK	T-5323	SULFOLE WEIGH TANK
M-5331	REACTOR MIXER	T-5324	INITIATOR WEIGH TANK
M-5332	" "	T-5325	VERSENE MAKE-UP TANK
M-5333	" "	T-5326	SFS MAKE-UP TANK
M-5334	" "	T-5327	ACTIVATOR MAKE-UP & FEED
M-5335	" "	T-5328	SOL. METER CALIBRATION
M-5336	" "	T-5331	METHANOL TANK
M-5337	" "		
M-5338	" "		
M-5339	" "		
M-5340	" "		
M-5344	BLOWDOWN MIXER	T-5348	STABILIZER SOAP CHARGE
M-5346	" "		
M-5347	" "		
M-5348	STABALIZER SOAP CHARGE		

		EXCHANGERS	
		E-5330	REACTOR CHARGE CHILL

AUXILIARY		BLOWERS	
AB-5323	SULFOLE WEIGH SCALE	B-5301	CONTROL ROOM BLOWER
AB-5324	INITIATOR WEIGH SCALE	B-5302	CONTROL PANEL PURGE
AB-5325	VERSENE WEIGH SCALE	B-5303	METER ROOM EXHAUST
AB-5326	SFS WEIGH SCALE		
AB-5327	ACTIVATOR WEIGH SCALE		
AB-5341	SOLIDS WEIGH SCALE		
AB-5342	SOLIDS WEIGH SCALE		

FOR PROCESS FLOW SHEET
SEE YT 8762-1

WO. 664300

3	1/2	ADDED V-5341, 43 [illegible]
2	[illegible]	REVISIONS [illegible]
1	[illegible]	REVISIONS [illegible]

SHELL CHEMICAL CORPORATION
TORRANCE PLANT

COPOLYMER PLANT
EQUIPMENT LOCATIONS
5300 AREA

YT-5064-3

TORRANCE
SH-0006847

PARTIALLY SCANNED OVERSIZE ITEM(S)

See document # 2141267
for partially scanned image(s).
PROCESS FLOW
SH - 0006848
For complete hardcopy version of the oversize document contact the Region IX Superfund Records Center at (415) 536-2000

AIR POLLUTION CONTROL DISTRICT - COUNTY OF LOS ANGELES
434 SOUTH SAN PEDRO STREET, LOS ANGELES 13, CALIFORNIA. MADISON 9-4711

APPLICATION

W. S. LARSON

AUTHORITY TO CONSTRUCT AND PERMIT TO OPERATE

INSTRUCTIONS

A. A FILING FEE OF $10.00 MUST ACCOMPANY EACH APPLICATION. CHECKS OR MONEY ORDERS SHOULD BE MADE PAYABLE TO THE AIR POLLUTION CONTROL DISTRICT, COUNTY OF LOS ANGELES.

B. THIS APPLICATION MUST BE FILLED OUT COMPLETELY AND MUST BE FILED IN TRIPLICATE.

C. APPLICATIONS ARE INCOMPLETE UNLESS ACCOMPANIED BY DUPLICATE COPIES OF ALL PLANS, SPECIFICATIONS AND DRAWINGS REQUIRED. DETAILS REQUIRED FOR SPECIFIC EQUIPMENT ARE LISTED ON SEPARATE FORMS WHICH ARE AVAILABLE UPON REQUEST.

D. THIS APPLICATION MUST BE SIGNED BY A RESPONSIBLE MEMBER OF THE ORGANIZATION THAT IS TO OPERATE THE EQUIPMENT FOR WHICH APPLICATION IS MADE. INCOMPLETE APPLICATIONS ARE NOT ACCEPTABLE.

ENGINEERING DIVISION
ROBERT L. CHASS
DIRECTOR OF ENGINEERING

APPLICATION INFORMATION

1. PERMIT TO BE ISSUED TO (BUSINESS LICENSE NAME OF CORPORATION, COMPANY, INDIVIDUAL OWNER OR GOVERNMENTAL AGENCY THAT IS TO OPERATE THE EQUIPMENT): Shell Chemical Company, A Division of Shell Oil Company

2. MAILING ADDRESS:
P. O. Box 211 (NUMBER, STREET) — Torrance (CITY OR COMMUNITY, ZONE)

3. ADDRESS AT WHICH THE EQUIPMENT IS TO BE OPERATED:
19601 S. Vermont (NUMBER, STREET) — Los Angeles (CITY OR COMMUNITY, ZONE)

4. TYPE OF ORGANIZATION: CORPORATION [X] PARTNERSHIP [ ] INDIVIDUAL OWNER [ ] GOVERNMENTAL AGENCY [ ]

5. GENERAL NATURE OF BUSINESS: Manufacture of Synthetic Rubber

6. EQUIPMENT DESCRIPTION. PURSUANT TO THE PROVISIONS OF THE STATE HEALTH AND SAFETY CODE AND THE RULES AND REGULATIONS OF THE AIR POLLUTION CONTROL DISTRICT, APPLICATION IS HEREBY MADE FOR AUTHORITY TO CONSTRUCT AND PERMIT TO OPERATE THE FOLLOWING EQUIPMENT: Installation of new 65,000 gallon S-2105 latex storage tank T-5242. Enforcement Inspection No. 5.

7. ESTIMATED COST OF EQUIPMENT OR OF ALTERATION: AIR POLLUTION CONTROL EQUIPMENT: $ - BASIC EQUIPMENT: $ 16,000

8. PRESENT STATUS OF EQUIPMENT (CHECK AND COMPLETE APPLICABLE ITEMS):

		ESTIMATE STARTING DATE	ESTIMATE COMPLETION DATE
[X]	CONSTRUCTION OR INSTALLATION NOT STARTED.	3/1/64	5/1/64
[ ]	CONSTRUCTION OR INSTALLATION PARTLY COMPLETED.		
[ ]	CONSTRUCTION COMPLETED.		
[ ]	EQUIPMENT IS TO BE ALTERED.		
[ ]	EQUIPMENT IS PARTLY ALTERED.		
[ ]	EQUIPMENT HAS BEEN ALTERED.		
[ ]	TRANSFER OF OPERATOR, OWNER OR LESSEE.		
[ ]	TRANSFER OF LOCATION.		

9. IF THIS EQUIPMENT HAD A PREVIOUS WRITTEN PERMIT GIVE NAME OF CORPORATION, COMPANY OR INDIVIDUAL OWNER THAT OPERATED THIS EQUIPMENT AND STATE PREVIOUS AIR POLLUTION CONTROL DISTRICT PERMIT NUMBER, IF KNOWN.
NAME — PERMIT NUMBER 32738

10. SIGNATURE OF RESPONSIBLE MEMBER OF FIRM: → Original Signed by M. L. Sagenkahn
DATE OF APPLICATION:

11. TYPE OR PRINT NAME AND OFFICIAL TITLE OF PERSON SIGNING THIS APPLICATION.
NAME M. L. Sagenkahn
TITLE Superintendent Technical
PHONE NUMBER FA 1 2340

A-

TORRANCE
SH-0006849

VALIDATION (A.P.C.D. USE ONLY)

16-50D5 R9-60-1 Form 400-A

AIR POLLUTION CONTROL DISTRICT - COUNTY OF LOS ANGELES
434 SOUTH SAN PEDRO STREET, LOS ANGELES 13, CALIFORNIA. MADISON 9-4711

STORAGE TANK SUMMARY

(SEE REVERSE SIDE FOR INSTRUCTIONS)

ONE COPY OF THIS FORM MUST BE FILLED OUT COMPLETELY FOR EACH TANK AND MUST ACCOMPANY THE TRIPLICATE APPLICATION FOR PERMIT (FORM 400-A).

1. BUSINESS LICENSE NAME OF CORPORATION, COMPANY, INDIVIDUAL OWNER OR GOVERNMENTAL AGENCY UNDER WHICH APPLICATION (FORM 400-A) IS SUBMITTED: Shell Chemical Company, A Division of Shell Oil Company

2. TANK LOCATION: Copolymer Plant 5200 Area

3. TANK IDENTIFICATION (NUMBER OR NAME): T-5242

4. TANK CAPACITY: BARRELS 65,000 GALLONS

5. TANK DIMENSIONS: DIAMETER 22' HEIGHT 24' LENGTH ____ WIDTH ____

6. TANK SHAPE: CYLINDRICAL [X] SPHERICAL [ ] OTHER SHAPE [ ] DESCRIBE ____

7. TANK MATERIALS OF CONSTRUCTION: STEEL [X] WOOD [ ] OTHER [ ] SPECIFY ____

8. TANK PAINT: CHALKING WHITE [ ] LIGHT GREY OR BLUE [X] ALUMINUM [ ] DARK COLOR OR NO PAINT [ ]

9. TANK CONDITION: GOOD [X] FAIR [ ] POOR [ ]

10. TANK STATUS: NEW CONSTRUCTION [X] ALTERATION [ ]

11. TYPE OF TANK: (CHECK ALL APPLICABLE) FIXED ROOF [X] PRESSURE [ ] INTERNALLY HEATED [ ] UNDERGROUND [ ]
FLOATING ROOF [ ] OPEN TOP [ ] INSULATED [X] OTHER [ ]

12. IF TANK IS TO HAVE A FLOATING ROOF, SUPPLY THE FOLLOWING INFORMATION:
TYPE OF ROOF: DOUBLE DECK [ ] PONTOON [ ] OTHER [ ] DESCRIBE ____
TYPE OF SEAL: SINGLE [ ] DOUBLE [ ] OTHER [ ] DESCRIBE ____
TYPE OF SHELL CONSTRUCTION: RIVETED [ ] WELDED [ ] OTHER [ ] DESCRIBE ____

13. IF TANK IS TO HAVE ANY OTHER TYPE OF ROOF OR COVER (OR NONE AT ALL), DESCRIBE:

14. VENT VALVE DATA: INDICATE TYPE, NUMBER, SETTINGS AND VAPOR DISPOSAL:

	NUMBER	PRESSURE SETTING	VACUUM SETTING	DISCHARGING TO: (CHECK) ATMOSPHERE	VAPOR CONTROL	FLARE
COMBINATION						
PRESSURE						
VACUUM						
OPEN	1			X		

15. NAME ALL LIQUIDS, VAPORS, GASES OR MIXTURES OF SUCH MATERIALS TO BE STORED IN THIS TANK: Concentrated latex DENSITY: 8.05 LBS/GAL. (OR) ____ °A.P.I.

16. TEMPERATURES AT WHICH THE ABOVE LISTED MATERIALS ARE TO BE STORED IN THIS TANK:
MINIMUM TEMPERATURE ____ °F MAXIMUM TEMPERATURE 110°F

17. IF MATERIAL STORED IS A PETROLEUM PRODUCT OR ANY OTHER TYPE OF ORGANIC MATERIAL, SUPPLY THE FOLLOWING INFORMATION FOR EACH MATERIAL: (ATTACH ADDITIONAL SHEETS, IF NECESSARY).
VAPOR PRESSURE: ____ LBS. REID (OR) ____ LBS. PER SQ. IN. ABSOLUTE AT ____ °F
S-2105 latex is a 65%w emulsion of SBR rubber particles in aqueous soap.
~~INITIAL BOILING POINT:~~ ____ °F
FOR HEAVY PETROLEUM PRODUCTS ONLY: FLASH POINT: ____ °F

18. OPERATIONAL DATA:
MAXIMUM FILLING RATE: ____ BARRELS PER HOUR (OR) 6,000 GALLONS PER HOUR
AVERAGE OUTAGE: (AVERAGE DISTANCE FROM TOP OF TANK SHELL TO LIQUID SURFACE) 12 FT
AVERAGE THROUGHPUT: ____ BARRELS PER DAY (OR) 4,300 GALLONS PER DAY
TANK TURNOVERS PER YEAR: 24

19. IF MATERIAL STORED IS A SOLUTION, SUPPLY THE FOLLOWING INFORMATION:
NAME OF SOLVENT: ____ NAME OF MATERIAL DISSOLVED: ____
CONCENTRATION OF MATERIAL DISSOLVED: ____ % BY WEIGHT (OR) ____ % BY VOLUME (OR ____ LBS./GALLON

20. IF MATERIAL STORED IS A GAS OR A LIQUIFIED GAS WHICH IS NOT A PETROLEUM PRODUCT, SUPPLY THE FOLLOWING INFORMATION:
IDENTIFY THE MATERIAL: ____
PRESSURE AT WHICH MATERIAL IS STORED: ____ LBS. PER SQ. IN. GAGE AT ____ °F

THE ABOVE INFORMATION IS SUBMITTED TO DESCRIBE THE USE OF THE TANK FOR WHICH APPLICATION FOR PERMIT IS BEING MADE ON THE ACCOMPANYING FORM 400-A:
SIGNATURE OF RESPONSIBLE MEMBER OF FIRM: →

TORRANCE
SH-0006850

TYPE OR PRINT NAME AND OFFICIAL TITLE OF PERSON SIGNING THIS DATA FORM.
NAME M. L. Sagenkahn
TITLE Superintendent Technical

JOB DESCRIPTION
ADDITION OF 65,000 GALLON STORAGE TANK
T-5242 TO S-2105 LATEX FACILITIES

W. O. 6643-00

A new 65,000 gallon storage tank T-5242 will be installed for S-2105 latex. As the latex does not contain volatile hydrocarbons, there are no air pollution considerations involved.

TORRANCE
SH-0006851

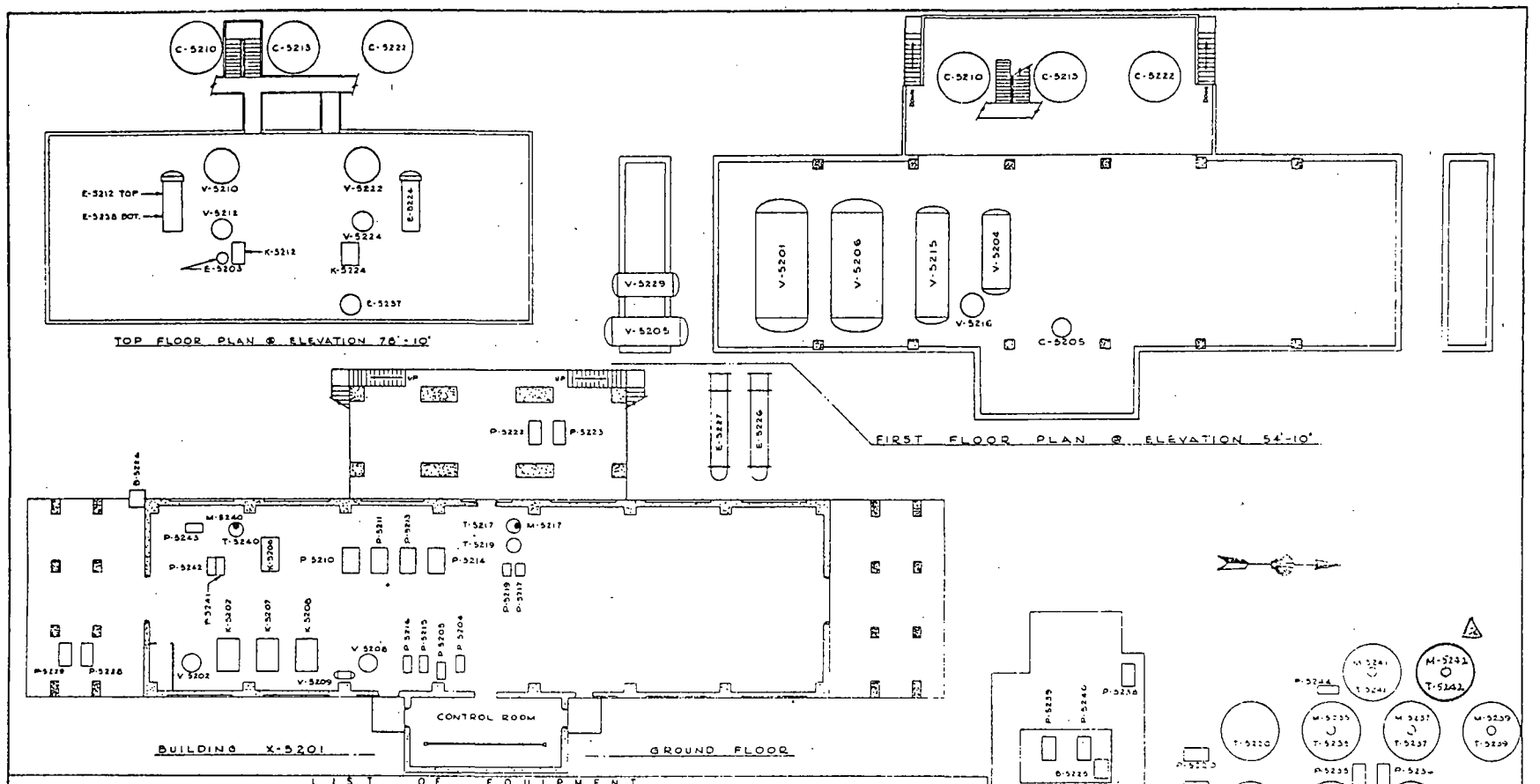

LIST OF EQUIPMENT

VESSELS

V-5201	BD PRESSURE FLASH
V-5202	BD COMPRESSOR K.O DRUM
V-5204	BD RECEIVER
V-5205	BD VENT SEPARATOR
V-5206	BD VACUUM FLASH
V-5208	BD VACUUM K.O DRUM
V-5209	BD VAC K.O. BLOWCASE
V-5210	STYRENE COL. PONDTRAP
V-5212	BOOSTER SUCTION DRUM
V-5215	STYRENE DECANTER
V-5216	WATER OVERFLOW
V-5222	CONCENTRATOR FOAM TRAP
V-5224	CONCENTR BOOTTER SUCT DRUM
V-5229	INHIBITOR FEED

EXCHANGERS

E-5205	BD CONDENSER
E-5212	STYRENE VACUUM COND.
E-5224	CONCENTRATOR COND.
E-5225	CONCENTRATOR LATEX HEATER
E-5227	CONCENTRATOR LATEX HEATER
E-5236	LATEX HEATER
E-5237	STYRENE VENT COND
E-5238	STYRENE STRIPPER COND

COLUMNS

C-5205	BD ABSORBER
C-5210	STYRENE STRIPPING COL
C-5213	DITTO
C-5222	DITTO

TANKS

T-5217	DEFOAMER MAKEUP TANK
T-5219	DEFOAMER FEED TANK
T-5220	STRIPPED LATEX SURGE TANK
T-5221	DITTO
T-5235	CONCENTRATED LATEX STOR TK
T-5236	DITTO
T-5237	DITTO
T-5238	DITTO
T-5239	DITTO
T-5240	TBC MIXING TANK
T-5241	CONCENTRATED LATEX STORAGE

BLOWERS

B-5201	EFFLUENT PIT EXHAUST
B-5202	EXHAUST FAN (X-5201 BLDG)

MIXERS

M-5217	DEFOAMER VACUUM TK MIXER
M-5235	CONCENTRATED LATEX STOR MIXER
M-5236	DITTO
M-5237	DITTO
M-5238	DITTO
M-5239	DITTO
M-5240	TBC TANK MIXER
M-5241	CONC LATEX TANK MIXER

COMPRESSORS

K-5201	BD COMPRESSOR
K-5207	BD COMPRESSOR & VAC PUMP
K-5208	BD VACUUM PUMP
K-5212	STRIP COL BOOSTER VAC PUMP
K-5224	CONCENTRATOR BOOSTER VAC PUMP
K-5206	BD COMP.

PUMPS

P-5204	BD RECEIVER PUMPOUT
P-5205	ABSORBER FEED
P-5210	STRIPPER FEED
P-5211	DITTO
P-5212	STRIPPER PUMPOUT
P-5214	DITTO
P-5215	STYRENE RECYCLE
P-5216	DECANTER WATER PUMPOUT
P-5217	DEFOAMER FEED PUMP
P-5218	DITTO
P-5220	STRIPPED LATEX CIRCULATION
P-5221	CONCENTRATOR FEED
P-5224	CONCENTRATOR CIRCULATION
P-5225	DITTO
P-5228	INHIBITOR MAKEUP PUMP
P-5229	INHIBITOR FEED PUMP
P-5235	SCREEN FEED PUMP
P-5236	PRODUCT LOADING
P-5238	PRODUCT STORAGE PUMP
P-5239	EFFLUENT PUMP
P-5240	DITTO
P-5241	TBC PUMP
P-5242	TBC FEED PUMP
P-5243	DRUM UNLOADING PUMP
P-5244	PRODUCT LOADING PUMP

FOR PROCESS FLOW SHEET SEE YT 8760-2

WO-664300

TORRANCE
SH-0006852

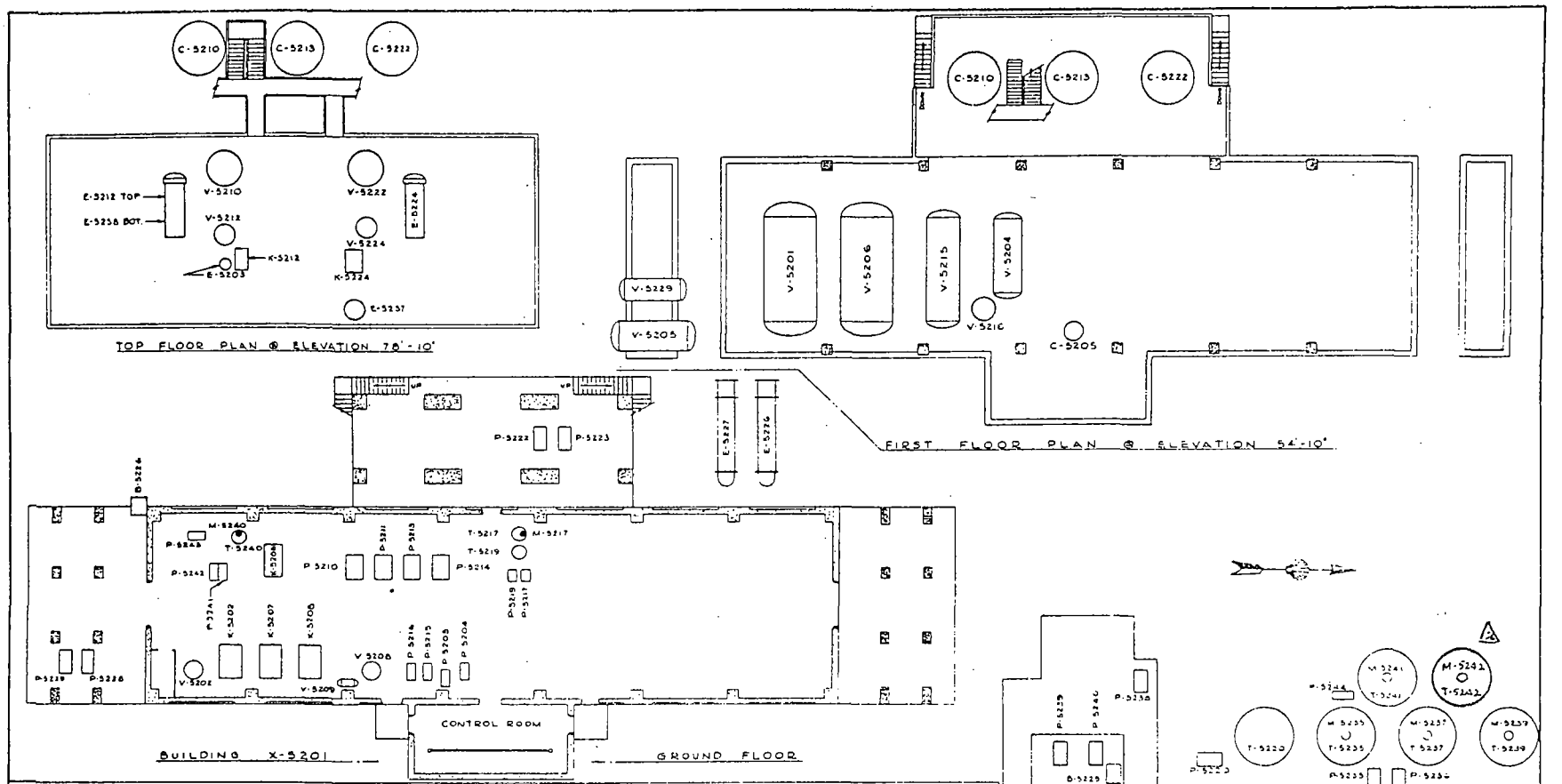

FOR PROCESS FLOW SHEET SEE YT 8760-2

WO-664300

LIST OF EQUIPMENT

VESSELS	
V-5201	BD PRESSURE FLASH
V-5202	BD COMPRESSOR K.O. DRUM
V-5204	BD RECEIVER
V-5205	BD VENT SEPARATOR
V-5206	BD VACUUM FLASH
V-5208	BD VACUUM K.O. DRUM
V-5209	BD VAC. K.O. BLOWCASE
V-5210	STYRENE COL. FOAM TRAP
V-5212	BOOSTER SUCTION DRUM
V-5215	STYRENE DECANTER
V-5216	WATER OVERFLOW
V-5222	CONCENTRATOR FOAM TRAP
V-5224	CONCENT'R BOOSTER SUCT DRUM
V-5229	INHIBITOR FEED
EXCHANGERS	
E-5203	BD CONDENSER
E-5212	STYRENE VACUUM COND.
E-5224	CONCENTRATOR COND.
E-5227	CONCENTRATOR LATEX HTR'R
E-5234	LATEX HEATER
E-5237	STYRENE VENT COND
E-5238	STYRENE STRIPPER COND
COLUMNS	
C-5203	BD ABSORBER
C-5210	STYRENE STRIPPING COL
C-5213	DITTO
C-5222	DITTO
TANKS	
T-5217	DEFOAMER MAKEUP TANK
T-5219	DEFOAMER FEED TANK
T-5220	STRIPPED LATEX SURGE TANK
T-5221	DITTO
T-5235	CONCENTRATED LATEX STORE TK
T-5236	DITTO
T-5237	DITTO
T-5238	DITTO
T-5239	DITTO
T-5240	TBC MIXING TANK
T-5241	CONCENTRATED LATEX STORAGE
BLOWERS	
B-5201	EFFLUENT PIT EXHAUST
B-5202	EXHAUST FAN (= 5201 BLOW)
MIXERS	
M-5217	DEFOAMER MAKEUP TANK MIXER
M-5235	CONCENTRATED LATEX STORE MIXER
M-5236	DITTO
M-5237	DITTO
M-5238	DITTO
M-5239	DITTO
M-5240	TBC TANK MIXER
M-5241	CONC LATEX TANK MIXER
COMPRESSORS	
K-5202	BD COMPRESSOR
K-5207	BD COMPRESSOR & VAC. PUMP
K-5208	BD VACUUM PUMP
K-5212	STRIP COL BOOSTER VAC PUMP
K-5224	CONCENTRATOR BOOSTER VAC. PUMP
K-5206	BD COMP
PUMPS	
P-5204	BD RECEIVER PUMPOUT
P-5209	ABSORBER FEED
P-5210	STRIPPER FEED
P-5211	DITTO
P-5213	STRIPPER PUMPOUT
P-5214	DITTO
P-5215	STYRENE RECYCLE
P-5216	DECANTER WATER PUMPOUT
P-5217	DEFOAMER FEED PUMP
P-5219	DITTO
P-5220	STRIPPED LATEX RECIRCULATION
P-5221	CONCENTRATOR FEED
P-5223	CONCENTRATOR RECIRCULATION
P-5225	DITTO
P-5228	INHIBITOR MAKEUP PUMP
P-5229	INHIBITOR FEED PUMP
P-5235	SCREEN FEED PUMP
P-5236	PRODUCT LOADING
P-5238	PRODUCT STORAGE PUMP
P-5239	EFFLUENT PUMP
P-5240	DITTO
P-5241	TBC PUMP
P-5242	TBC FEED PUMP
P-5243	DRUM UNLOADING PUMP
P-5244	PRODUCT LOADING PUMP

TORRANCE
SH-0006852

PARTIALLY SCANNED OVERSIZE ITEM(S)

See document # 2141267
for partially scanned image(s).
PROCESS FLOW DIAGRAM
SH-0006853
For complete hardcopy version of the oversize document contact the Region IX Superfund Records Center at (415) 536-2000

AIR POLLUTION CONTROL DISTRICT - COUNTY OF LOS ANGELES
434 SOUTH SAN PEDRO STREET, LOS ANGELES 13, CALIFORNIA - MADISON 9-4711

APPLICATION

John Petty

AUTHORITY TO CONSTRUCT AND PERMIT TO OPERATE

INSTRUCTIONS

A. A FILING FEE OF $10.00 MUST ACCOMPANY EACH APPLICATION. CHECKS OR MONEY ORDERS SHOULD BE MADE PAYABLE TO THE AIR POLLUTION CONTROL DISTRICT, COUNTY OF LOS ANGELES.

B. THIS APPLICATION MUST BE FILLED OUT COMPLETELY AND MUST BE FILED IN TRIPLICATE.

C. APPLICATIONS ARE INCOMPLETE UNLESS ACCOMPANIED BY DUPLICATE COPIES OF ALL PLANS, SPECIFICATIONS AND DRAWINGS REQUIRED. DETAILS REQUIRED FOR SPECIFIC EQUIPMENT ARE LISTED ON SEPARATE FORMS WHICH ARE AVAILABLE UPON REQUEST.

D. THIS APPLICATION MUST BE SIGNED BY A RESPONSIBLE MEMBER OF THE ORGANIZATION THAT IS TO OPERATE THE EQUIPMENT FOR WHICH APPLICATION IS MADE. INCOMPLETE APPLICATIONS ARE NOT ACCEPTABLE.

ENGINEERING DIVISION
ROBERT L. CHASS
DIRECTOR OF ENGINEERING

APPLICATION INFORMATION

1. PERMIT TO BE ISSUED TO (BUSINESS LICENSE NAME OF CORPORATION, COMPANY, INDIVIDUAL OWNER OR GOVERNMENTAL AGENCY THAT IS TO OPERATE THE EQUIPMENT): Shell Chemical Company, A Division of Shell Oil Company

2. MAILING ADDRESS:
NUMBER P. O. Box 211 STREET Torrance CITY OR COMMUNITY ZONE

3. ADDRESS AT WHICH THE EQUIPMENT IS TO BE OPERATED:
NUMBER 19001 S. Vermont Avenue STREET Los Angeles CITY OR COMMUNITY ZONE

4. TYPE OF ORGANIZATION: CORPORATION [X] PARTNERSHIP [ ] INDIVIDUAL OWNER [ ] GOVERNMENTAL AGENCY [ ]

5. GENERAL NATURE OF BUSINESS: Synthetic Rubber Manufacture

6. EQUIPMENT DESCRIPTION. PURSUANT TO THE PROVISIONS OF THE STATE HEALTH AND SAFETY CODE AND THE RULES AND REGULATIONS OF THE AIR POLLUTION CONTROL DISTRICT, APPLICATION IS HEREBY MADE FOR AUTHORITY TO CONSTRUCT AND PERMIT TO OPERATE THE FOLLOWING EQUIPMENT: Equipment additions and alterations to [redacted] (W. O. 6636-00)

Reformement Inoculation Copolymer No. 3

7. ESTIMATED COST OF EQUIPMENT OR OF ALTERATION: AIR POLLUTION CONTROL EQUIPMENT: $ - BASIC EQUIPMENT: $50,000

8. PRESENT STATUS OF EQUIPMENT (CHECK AND COMPLETE APPLICABLE ITEMS):

		ESTIMATE STARTING DATE	ESTIMATE COMPLETION DATE
[X]	CONSTRUCTION OR INSTALLATION NOT STARTED.	4-15-64	6-1-64
[ ]	CONSTRUCTION OR INSTALLATION PARTLY COMPLETED.		
[ ]	CONSTRUCTION COMPLETED.		
[ ]	EQUIPMENT IS TO BE ALTERED.		
[ ]	EQUIPMENT IS PARTLY ALTERED.		
[ ]	EQUIPMENT HAS BEEN ALTERED.		
[ ]	TRANSFER OF OPERATOR, OWNER OR LESSEE.		
[ ]	TRANSFER OF LOCATION.		

9. IF THIS EQUIPMENT HAD A PREVIOUS WRITTEN PERMIT GIVE NAME OF CORPORATION, COMPANY OR INDIVIDUAL OWNER THAT OPERATED THIS EQUIPMENT AND STATE PREVIOUS AIR POLLUTION CONTROL DISTRICT PERMIT NUMBER, IF KNOWN.
NAME
PERMIT NUMBER A-13145 A-15335

10. SIGNATURE OF RESPONSIBLE MEMBER OF FIRM: → Original Signed by M. L. Sagenkahn
DATE OF APPLICATION:

11. TYPE OR PRINT NAME AND OFFICIAL TITLE OF PERSON SIGNING THIS APPLICATION.
NAME M. L. Sagenkahn
TITLE Superintendent Technical
PHONE NUMBER PA 1 2340

A-

VALIDATION (A.P.C.D. USE ONLY)

16-50D5 R9-60-1 Form 400-A

TORRANCE
SH-0001490

JOB DESCRIPTION

REVISIONS TO POLYISOPRENE LATEX UNIT

W. O. 6636-00

The following new items will be installed:

1. One 2500 ft^2 serum heater (E-3232).
2. One 750 ft^2 column bottoms heater (E-3231).
3. One serum pump with 60 horsepower driver (P-3242).
4. One column bottoms pump with 30 horsepower driver (P-3244).
5. Two entrainment separation vessels (V-3243, V-3244).
6. One 1750 ft^2 foam condenser E-3230.
7. One 900 gallon first stage decanting vessel V-3245.
8. One coalescer recycle pump with 3 horsepower driver (P-3243).
9. One 189 ft^2 product heater E-5006.

The following relocations or repiping jobs are involved:

1. Relocate 570 ft^2 solvent condenser E-3216 (Permit A-5489) as flashed solvent condenser E-3336.
2. Relocate 750 ft^2 second stage heater E-3223 (Permit A-13145) as column bottoms heater E-3223.
3. Relocate 189 ft^2 pressure flash heater E-3222 (Permit A-13145) as concentrated serum cooler E-3335.
4. Relocate butadiene charge pump P-3365 (Permit 16094) with new 20 horsepower motor as column bottoms pump P-3245.

5. Repipe isopentane accumulator V-3233 (Permit A-5489) as steam generation vessel V-3233.
6. Repipe steam generators E-3227 and E-3228 (Permit A-15335) as column feed heaters
7. Repipe compressor intercooler E-3224 (Permit A-13145) as centrifuge feed cooler.
8. Replace 60 horsepower Warren polymer solution feed pump P-3813 (Permit A-13145) with 30 horsepower Viking gear pump (P-3337 of Permit A-5489).

Note: 35,000 gallon finished product storage tanks T-5235 and T-5236 (Permit A-13145) will be returned to cold high solids latex service (Permits 32970 and 32971). Polyisoprene latex will be stored in A, B and C blend tanks in the 5000 area (Permits 16410, 16411 and 16412) and product transfer pump P-5245 (Permit No. A-13148) will be relocated to the 5000 area.

TORRANCE
SH-0001491

TORRANCE
SH-0001492

H.O. 125 11-49 PRINTED IN U.S.A.

TIME SAVING MEMORANDUM

7/2/69

Rom Grover

Attached for your records is a copy of an Amendment to our License for Radioactivity #0559-71.

HCJ

TORRANCE
SO-0015073

Treasury

STATE OF CALIFORNIA
DEPARTMENT OF PUBLIC HEALTH

RADIOACTIVE MATERIAL LICENSE
Supplementary Sheet

License Number 0559-71

Amendment No. 1

Shell Chemical Company
A Division of Shell Oil Company
19821 Hamilton Street
Los Angeles, California

In response to a telegram from G. S. Williamson dated June 17, 1964, license number 0559-71 is hereby amended as follows:

To read:

14. (b) Application dated June 27, 1963, and supporting material submitted therewith except that all sealed sources of subitem D shall be located in the copolymer plant.

TORRANCE
SO-0015074

For the State Department of Public Health

Date June 18, 1964 by John M. Heslep

John M. Heslep, Chief
Bureau of Radiological Health
2151 Berkeley Way, Berkeley 4, California

Form RH 2551

3992

SHELL CHEMICAL COMPANY
A DIVISION OF SHELL OIL COMPANY
P. O. BOX 211
TORRANCE, CALIFORNIA

July 10, 1964

Licensing Division
Bureau of Radiological Health
State Department of Public Health
1625 Shattuck Avenue
Berkeley 4, California

Gentlemen:

Re: Radioactive Material License No. 0559-71

We are submitting for your approval, amendments to our radioactive material license to cover the addition of unsealed hydrogen-3, iodine-131, and sulfur-35 sources, the relocation of an Ohmart unit, and recent personnel changes. These amendments are outlined on Attachment No. 1. In addition, as requested in your letter of September 5, 1963, we are submitting in Attachments No. 2 and 3 detailed information to support our proposed amendment of Condition 16 of our license. This amendment would authorize our Radiation Protection Officers to relocate radioactive units within the area covered by our license when this becomes necessary because of operational changes. You will note that Attachment No. 1 includes, as Item 4-I-B, the condition that the 0.5 curie cesium-137 source originally intended for use in a tank cannot be removed from its storage container without further amendment of our license. Thus, the authorization to relocate sealed sources would include only manufactured source holder units.

In reference to the letter dated June 5, 1964 from the Los Angeles City Health Department concerning their inspection of our facilities on February 5, 1964, we wish to report the following corrective measures taken on the items mentioned in this letter. We have set up a record system for radiation surveys on each sealed source to show specifically the dates, positions, distances, and intensities of each measurement made. These surveys will be performed every 3 months and following any sealed source relocations. Proposed monitoring and record keeping procedures during the moving or maintenance of sealed sources are covered in the above mentioned Attachments No. 2 and 3.

The inspection report suggests that we amend our license to show separately the 250 millicurie tritium sources located in gas chromatography

TORRANCE
SO-0015062

instruments used in our laboratories. We have shown as Item 3-II-C in Attachment No. 1, eight such units totaling 2 curies as unsealed sources. At present we possess four Aerograph Hy-Fl Gas Chromatographs with hydrogen-3 electron capture detectors and may require as many as four more in the foreseeable future. The construction, operation, and maintenance of the units we now have is discussed in the "Instruction Manual - Electron Capture Detector for Aerograph Hy-Fl Gas Chromatographs", provided by the manufacturer, Wilkens Instrument and Research Inc., Walnut Creek, California. We carefully follow these instructions which provide for infrequent washing of the foil on which tritium is mounted. This operation is carried out in a ventilated laboratory by persons who have received instruction in radioisotope safety. All washings are handled in the same manner as we do our other radioactive wastes even though negligible activity is removed.

We would appreciate receiving your approval or comments on the above.

Yours very truly,
SHELL CHEMICAL COMPANY

Original Signed by G. S. Williamson

G. S. Williamson
Plant Manager

WCT:vmv

Attachments

cc: Los Angeles County Health Dept., Attention: Mr. Jack Rogers

bc: N. R. Legge
M. L. Sagenkahn
G. R. Harrington
N. K. Grover Copy For
R. C. Mobley
J. T. Harlan
D. W. Fraga
M. W. Hansen
W. C. Towner
Engr. File 602-1E
Engr. File 602-2E
Central Files

TORRANCE
SO-0015063

ATTACHMENT NO. 1

AMENDMENTS TO RADIOACTIVE MATERIAL LICENSE NO. 0559-71
ADDITIONAL UNSEALED SOURCES, RELOCATION OF SEALED SOURCE, PERSONNEL CHANGES

NOTE: Please refer to Shell Chemical's "Application for Radioactive License", dated June 27, 1963. The sections below within quotation marks are revisions of that application. Parts not repeated below are unchanged.

* * * * * * * * *

FIRST AMENDMENT - ADDITIONAL RADIOISTOPE SOURCES

It is proposed to make the following additions, with the above application to read in part as follows:

"ITEM 3 - RADIOACTIVE MATERIALS

a. Radioactive Material	b. Chemical and/or Physical Form	c. Possesion Limit (at one time)
II. Unsealed Sources		
C. Hydrogen-3	Titanium tritide as a coating on a metal foil contained in a gas Chromotography Detector.	2 curies(8 sources 250 mc each)
D. Iodine-131	Various inorganic or organic compounds (NaI, C_6H_5I, etc.)	20 mc
E. Sulfur-35	Various organic compounds (e.g., mercaptans)"	10 mc

* * * * * * * * *

SECOND AMENDMENT - RELOCATION OF SEALED SOURCES

In our letter of August 19, 1963, we requested clarification of our license Condition 16. Your letter of September 5, 1963, requested information about procedures for using the rod source in the Research Pilot Plant. The following proposed amendment, Item 4-I-B, will eliminate any question about the use of this source by requiring that it not be removed from its storage shield except for wipe tests. We have attached as supporting information drawings VT-11749 and FP-16521 showing location and shielding. Also enclosed is a report of a radiation survey made by Western Radiation Laboratory.

TORRANCE
SO-0015064

"ITEM 4 USE OF RADIOACTIVE MATERIAL

I. Sealed Sources Listed in Item 3

B. Research Pilot Plant - located in a locked and shielded storage container. Removal of this source from storage for any purpose other than authorized inspection will require a license amendment.

D. Copolymer Plant (4) - Use in Ohmart Corp., Model ASR-3 source holder for measuring density of material flowing in pipes."

* * * * * * * * * * *

THIRD AMENDMENT - PERSONNEL CHANGES

Mr. L. J. Notter has been transferred to another Shell location. Delete references to him in ITEMS 5, 6, and 7, and amend these items to read in part as follows:

"ITEM 5 (a) INDIVIDUAL USERS

I. Sealed Sources

B. J. T. Harlan Jr., - Senior Research Technologist - Research Laboratory.

ITEM 5 (b) RADIATION PROTECTION OFFICERS

I. Sealed Sources

A. W. C. Towner - Senior Engineer - Instrumentation - Engineering.

B. (Alternate) - J. D. Underwood - Fire and Safety Inspector - Fire and Safety Department.

C. (Alternate) - J. T. Harlan Jr. - Senior Research Technologist. Research Laboratory.

II. Unsealed Sources

A. J. T. Harlan Jr. - Senior Research Technologist - Research Laboratory.

B. (Alternate) - Marion W. Hansen - Research Chemist - Research Laboratory.

C. (Alternate) - Richard W. Pymm - Research Chemist - Research Laboratory.

ITEMS 6 AND 7: TYPE OF TRAINING-EXPERIENCE WITH RADIOACTIVITY

I. Sealed Sources

B. J. D. Underwood.

1. General Background.

Mr. Underwood has served for eleven years as Fire and Safety Inspector in the Torrance Plant during which time he was on special assignment in a Shell Chemical plant in New Jersey to set up safety facilities and procedures. He has completed one year of college plus several specialist schools with the U.S. Navy. He currently assists in the supervision of safety, plant security, and fire protection procedures and standards in the Torrance Plant.

2. Training Related to Radiation Utilization and Safety.

a. Three-day course on radiation safety with sealed sources up to 5 curies presented by Western Radiation Laboratory, Los Angeles, October 25, November 1 and 8, 1961, with special reference to cesium-137.

b. In-plant refreshers course (1 hour) with J. T. Harlan, during July, 1964.

3. Experience with Radioactivity (Item 7).

a. Indirect contact with problems concerning the sealed and unsealed sources located in the Torrance Plant as a result of his responsibilities as Fire and Safety Inspector.

C. J. T. Harlan, Jr. (See ITEM 6 and 7, II, C, for details of Mr. Harlan's training)".

TORRANCE
SO-0015066

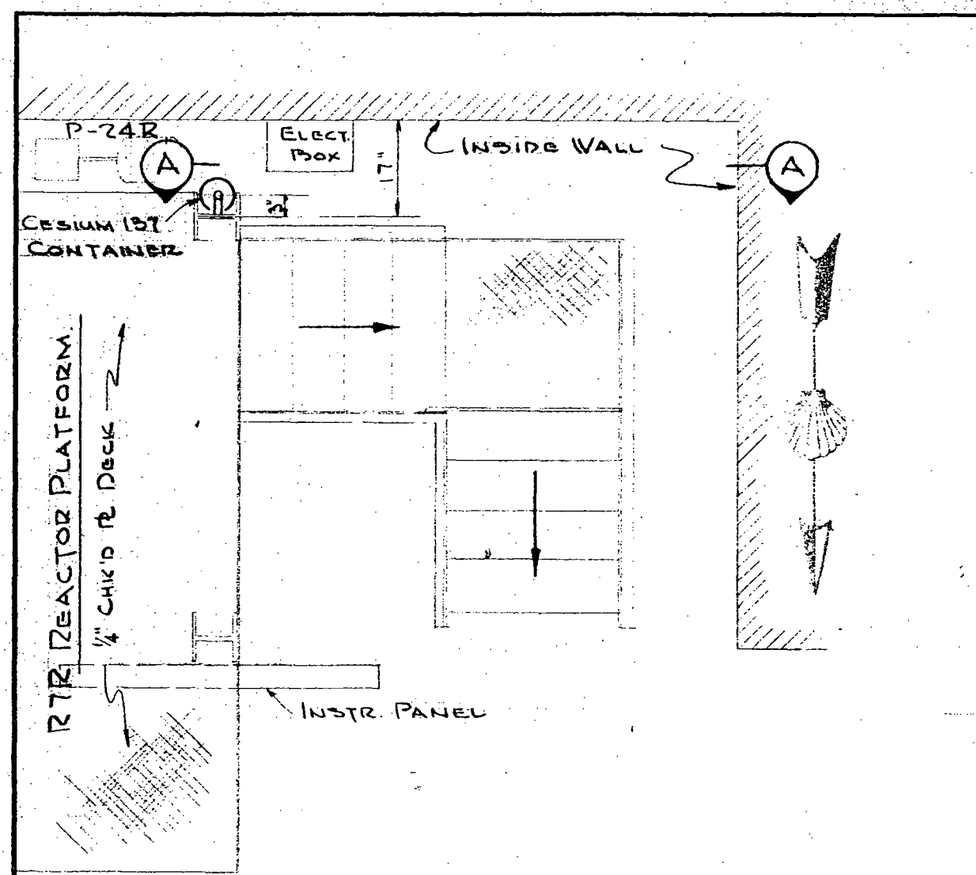

PLAN
1/2" = 1'-0"

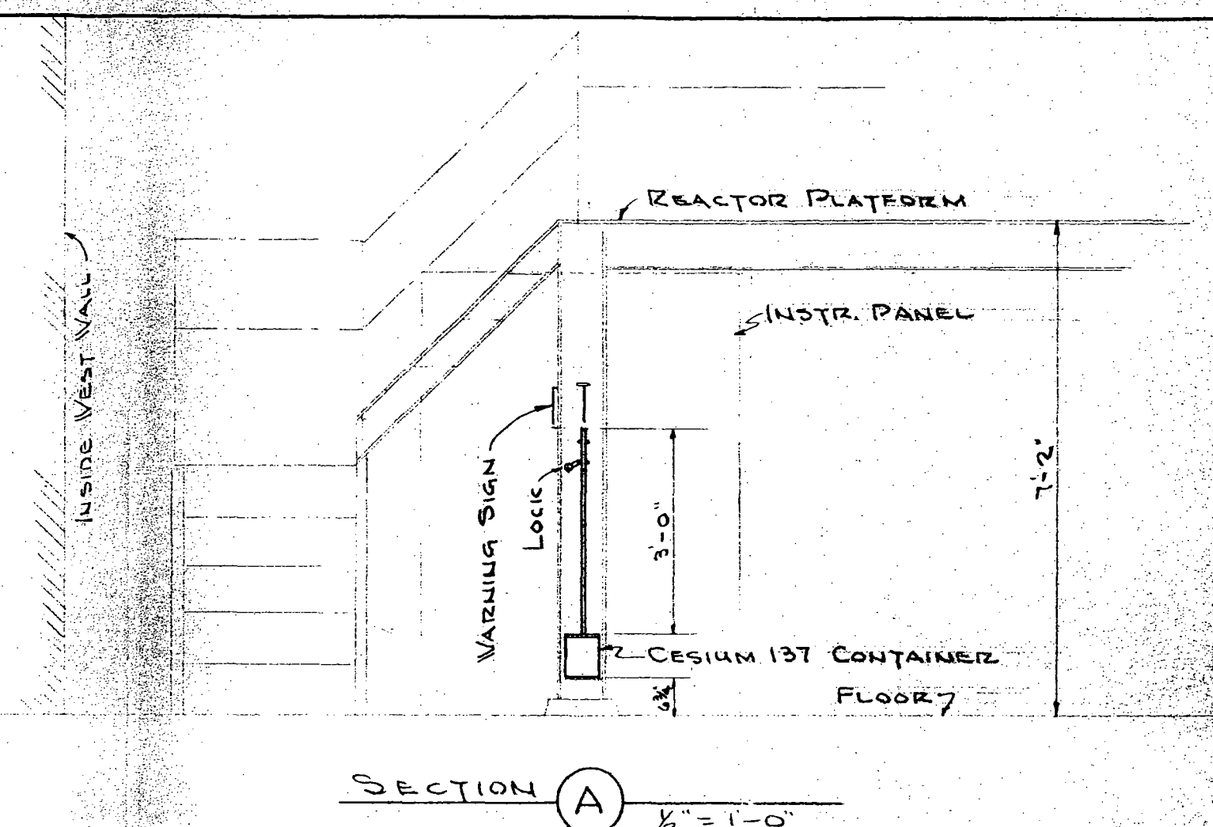

SECTION (A)
1/2" = 1'-0"

REF. FP-16521 STORAGE CONTAINER

		TORRANCE SO-0015067	
MARK	DATE	DESCRIPTION	APPROVED
LIST OF CHANGES			

SHELL CHEMICAL CORPORATION
ENGINEERING DEPT. TORRANCE PLANT

RESEARCH — X-505
PROTECTIVE SHIELD FOR
CESIUM 137
PLAN & SECTION

DRAWN BY: C. RAIDES	CHIEF TECH.:
CHIEF DRAFT.:	DEPT. MGR.:
JOB ENGR.:	ASST. SUPT.:
CHIEF ENGR.: 7/19/63	MANAGEMENT:
DATE: Dec 17, 1963	VT-11749
SCALE: 1/2" = 1'-0"	

FP 16521

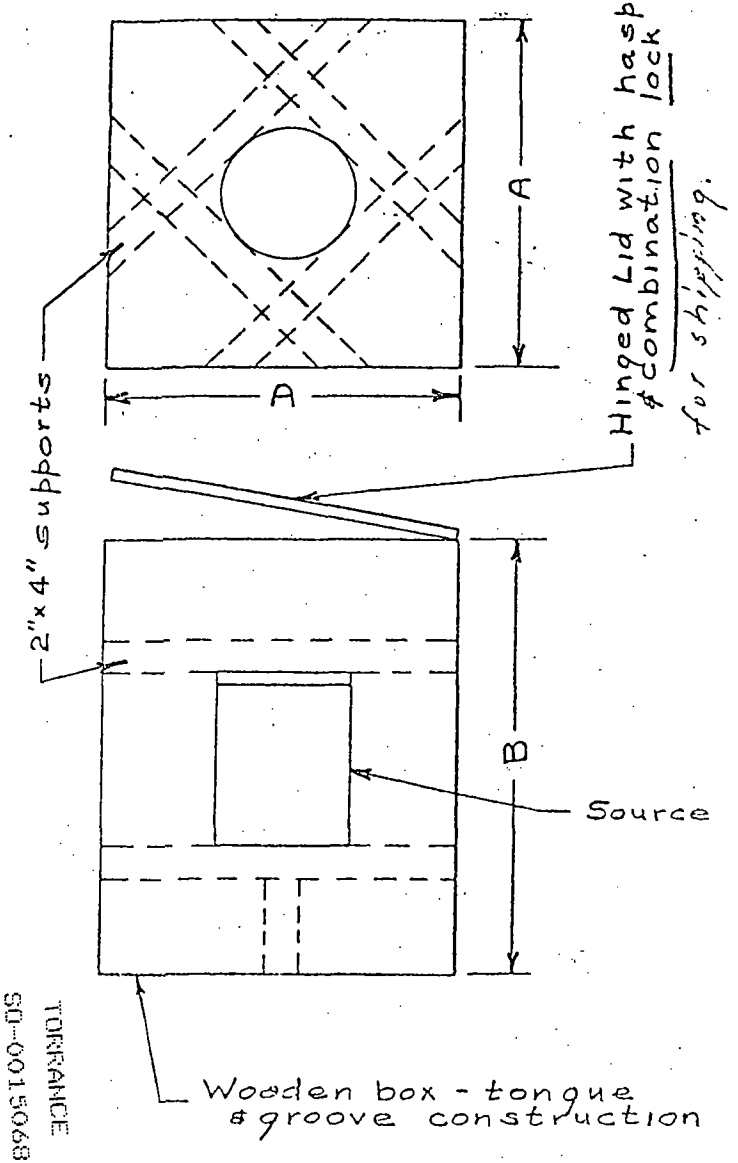

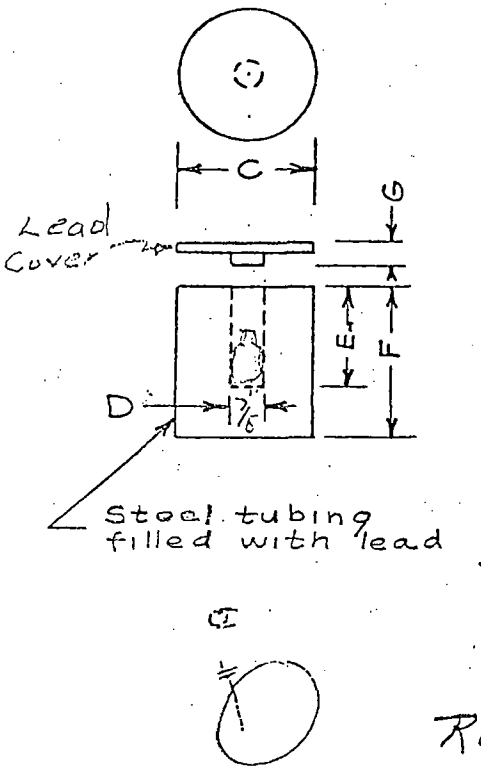

A =
B =
C = 6"
D = 7/8"
E = 2 1/2"
F = 5 1/2"
G = 3"

Handling Rod Length = 36" Long

1/2" Std. Thd.

B-1142

Research pilot plant.

THE OHMART CORPORATION CINCINNATI, OHIO			
Shipping & Storage Container for Radioactive Source			
MODEL		OHMART S. O.	
DRAWN BY	HLC	CHECKED	
CUSTOMER			
P. O. NO.		SCALE	
DATE	2-22-56	DWG. A	1143

TORRANCE 50-0015068

FP 16521 FP 16521

RICHMOND 7-8355

WESTERN RADIATION LABORATORY
1107 WEST 24RT STREET
LOS ANGELES 7, CALIFORNIA

REPORT

October 1, 1963

Shell Chemical Company
Att: Mr. K. Kotter
19012 So. Vermont Avenue
Torrance, California

RADIATION SURVEY AROUND ROD-MOUNTED CESIUM-137 SOURCE FOR PILOT PLANT REACTOR.

This report covers a survey of environmental gamma-ray dose rates around the subject Cs-137 source in the stored condition.

The source is stored vertically in a lead-filled container, with the handling rod upward. The storage container is secured to a large vertical I-beam and the top of the handle padlocked to the I-beam in a manner which prevents unauthorized or accidental removal. An appropriate sign is mounted on the I-beam. Access to the storage area is largely obstructed. So there is no traffic of personnel near the source.

A survey was made on this date, using a Nuclear-Chicago Model 2586 (cutie-pie) survey meter in good calibration.

Results:

West of container: 2. mr/hr at 12" from surface, or 0.22 mr/hr at 3' (by extrapolation).

North of container: 1. mr/hr at 12" from surface, or 0.11 mr/hr at 3' (by extrapolation).

East of container: No access due to heavy permanent equipment adjoining container.

South of container, outside brick wall which is approximately one foot from container: No observable reading (under 0.25 mr/hr).

At hand-position of rod: 1.5 mr/hr.

Remarks:

In view of the location and manner in which this source is stored, it is in my opinion inconceivable that any person in the area could accumulate as much as 125. mrem in any calendar quarter.

Western Radiation Laboratory, by

Gordon L. Locher

Gordon L. Locher

TORRANCE
SO-0015069

ATTACHMENT NO. 2

AMENDMENTS TO RADIOACTIVE MATERIAL LICENSE NO. 0559-71
MODIFICATION OF CONDITION 16, MOVING OF SEALED SOURCES

NOTE: Please refer to Shell Chemical's "Application for Radioactive Material License", dated June 27, 1963. The section below within quotation marks is a revision of that application. Parts not repeated below are unchanged.

"ITEM 12 RADIATION PROTECTION PROGRAM

I. Sealed Sources

A. Leak testing of each sealed cource is performed at six-month intervals (April and October) by a qualified outside service (e.g., Western Radiation Laboratory), who issues a written report of the results for record purposes.

B. Radiation surveys around each sealed source are performed by either the Radiation Protection Officer (Sealed Sources), his alternates, or a qualified outside service (e.g., Western Radiation Laboratory). These surveys are performed after the initial installation of the sealed source, every 3 months (January, April, July, and October), and following the relocation of any sealed source. Records of all surveys are kept to show the date of the survey, the position of the measurements taken, the values of the readings, and the type of monitor used.

C. The repair, opening, modification, and replacement of the actual sealed source are performed by a qualified outside service (e.g., Ohmart Corporation). The servicing and maintenance of the electrical and mechanical parts associated wit the sealed source are performed by Shell personnel under the supervision of the Radiation Protection Officer(Sealed Sources), his alternates, or by a qualified outside service (e.g., Ohmart Corporation).

D. The relocation of a manufactured source holder (for example, Ohmart Model ASR-3) containing a sealed source is performed by Shell personnel under the direct supervision of the Radiation Protection Officer (Sealed Sources), or his alternates. The general procedure approved by the Plant Radioisotope Committee will be used for relocating a source holder within the area covered by the Radioactive Material License No. 0559-71".

TORRANCE
SO-0015070

ATTACHMENT NO. 3

GENERAL PROCEDURE FOR THE RELOCATION OF RADIOISOTOPE-CONTAINING INSTRUMENTS WITHIN THE SHELL CHEMICAL-TORRANCE PLANT

The following procedure has been reviewed and approved by the Torrance Plant Radioisotope Committee. This or subsequent approved revisions of it, will govern the actions of the Radiation Safety Officer (Sealed Sources), or his alternate. This procedure is attached as supporting data for amendment to Condition 16, but is not to become a part of Radioactive Materials License No. 0559-71. It is included for information only.

"The California State Department of Public Health regulations require a definite and safe procedure for the relocation of equipment containing sealed radiation sources. To comply with these regulations, the following procedures must be adhered to within the Shell Chemical Torrance Plant.

1. The Plant Radiation Protection Officer(Sealed Sources), or his alternate, shall be notified in advance when any radiation equipment is to be installed, moved or relocated. (See the General Plant Order B-14 "Radioisotyope Safety" for names and phone numbers of Radiation Protection Officers.)

2. The Plant Radiation Protection Officer(Sealed Sources) shall then coordinate the work to be done and see that the State and Plant regulations are followed. He shall be present at all times when work is being performed.

3. A radiation survey shall be made with the plant survey meter before any work begins and a record kept of the results. Radiation monitors (two or more dosimeters) shall be securely strapped to the equipment before being moved. Extreme care shall be exercised to see that the dosimeters and equipment are not dropped, jarred or damaged in any manner.

4. Precautions shall be taken, depending upon the type of radioisotope-containing equipment, to install the source holder in the closed position or to keep the metal block for the calibration absorber slot firmly in place.

5. Caution signs bearing the radiation symbol shall be attached to the radiation equipment at all times. There shall be two signs, one with the words, "Caution - Radiation Area", and the other with the words, "Caution - Radioactive Material. Other signs bearing additional instructions may be attached where agreed upon by the Plant Radioisotope Committee.

6. Only after the above precautions have been taken can the equipment be worked upon and relocated. When an in-line pipe radiation measuring unit is to be moved, personnel shall be cautioned not to place their hands inside of the pipe at any time. When an in-line unit is removed from the associated piping, blind flanges shall be installed immediately on the open ends of the pipe.

7. Upon arrival at the new location, personnel shall be given the same instructions when an in-line radiation unit is being moved, not to place their hands inside the pipe. The blind flanges shall be removed only when the instrument is ready to be inserted into the pipeline.

8. After the installation is complete, (a) the caution signs under Item 5 shall be properly posted, (b) a final radiation survey shall be made and recorded, and (c) the radiation monitors (dosimeters) shall be removed, read, and recorded.

NOTE: With the adequate shielding provided by the manufacturers of equipment containing radioisotopes, there is normally no hazard connected with a plant operation involving such radioactivity. However, the above precautions are necessary to assure that no radiation exposure occurs due to improper handling or unauthorized disassembly of the shielded source and to establish a record of the fact that no exposure occured".

TORRANCE
SO-0015072

8/10/64

N. K. GROVER - TREASURY

attached is for your files.

TORRANCE
SO-0015060

W. C. TOWNER

STATE OF CALIFORNIA
DEPARTMENT OF PUBLIC HEALTH

RADIOACTIVE MATERIAL LICENSE
Supplementary Sheet

License Number 0559-70

Amendment No. 2

Shell Chemical Company
A Division of Shell Oil Company
19821 Hamilton Street
Los Angeles, California

License numbered 0559-71 is hereby amended as follows:

To read:

3. 0559-70

5. **Los Angeles County Health Department**

TORRANCE
SO-0015061

For the State Department of Public Health

Date July 22, 1964 by John M. Heslep

John M. Heslep, Chief
Bureau of Radiological Health
2151 Berkeley Way, Berkeley 4, California

Form RH 2551

STATE OF CALIFORNIA—HEALTH AND WELFARE AGENCY

EDMUND G. BROWN, Governor

DEPARTMENT OF PUBLIC HEALTH

2151 BERKELEY WAY
BERKELEY 94704

May 5, 1965

Shell Chemical Company
A Division of Shell Oil Company
P. O. Box 211
Torrance, California

Attn: Mr. G. S. Williamson

Dear Mr. Williamson:

Enclosed is Amendment No. 3 to license no. 0559-70. As nearly as I can determine, it will meet your needs; if not, would you please apply for another amendment.

With reference to the third paragraph on page 2 of your letter of April 19, 1965, I do not understand why it should be necessary or desirable for you to release material containing radioactive material in exempt concentrations to normal sales outlets. If you wish to do so, would you please apply for authorization in accordance with Section 30195(g) of California Radiation Control Regulations?

Sincerely yours,

John M. Heslep, Chief
Bureau of Radiological Health

By

D. A. Pickler

D. A. Pickler
Associate Health Physicist

DAP:kg

Enc.

cc: J. C. Rogers

TORRANCE PLT.
MAY 10 1965
1 MGR.
2 SUPT. OPRS.
MAINT.
STY.
BUTA.
COPOLY
SHIP
3 SUPT. TECH
TECH
4 ENGR.
LAB
5
TREAS.
P & R
Purch-Stores
6 CEN. F.
PLS. HDL
DATE ANS.
ANS. BY
FILE NO.

Note: Send master copy to Treasury (Norm Grover) for their files.

TORRANCE
SO-0015052

STATE OF CALIFORNIA
DEPARTMENT OF PUBLIC HEALTH

RADIOACTIVE MATERIAL LICENSE
Supplementary Sheet

License Number 0559-70

Amendment No. 3

Shell Chemical Company
A Division of Shell Oil Company
19821 Hamilton Street
Los Angeles, California

In response to a letter dated April 19, 1965, license numbered 0559-70 is hereby amended as follows:

To add:

6. Radioactive material (element and mass number)	7. Chemical and/or physical form	8. Maximum quantity of material which licensee may possess at any one time
G. Hydrogen 3	G. Titanium tritide foil (U. S. Radium Corp.)	G. 8 sources not to exceed 250 millicuries each
H. Iodine 131	H. Any	H. 20 millicuries
I. Sulfur 35	I. Any	I. 10 millicuries

9. Authorized use

G. To be used as components of Wilkens Instrument & Research, Inc. gas chromatographs.

H and I. To be used for research and development as defined in Section 30175(n) of California Radiation Control Regulations.

TORRANCE

SO-0015053

18. The licensee is authorized to transfer, for burial in public dumps, solid rubbish containing radioactive materials in concentrations not exceeding that in California Administrative Code, Title 17, Section 30237, Schedule C.

19. Radioactive material described in subitems A, C, and D shall be tested for leakage and/or contamination at intervals not to exceed 3 years. Radioactive material described in subitem B shall be tested for leakage and/or contamination at intervals not to exceed 6 months.

20. Records of leak test results shall be kept in units of microcuries and maintained for inspection. Any leak test revealing the presence of 0.005 μc or more of removable radioactive material shall be reported to the State Department of Public Health, Bureau of Radiological Health, 2151 Berkeley Way, Berkeley, California 94704, within 5 days of the test. This report should include a description of the defective source or device, the results of the test and the corrective action taken.

21. The gas chromatographs containing titanium tritide shall not be operated at temperatures exceeding 225 degrees Centigrade.

STATE OF CALIFORNIA
DEPARTMENT OF PUBLIC HEALTH

RADIOACTIVE MATERIAL LICENSE
Supplementary Sheet

License Number 0559-70

To read:

12. Radioactive material described in subitems A-D may be used only by, or under the supervision of, W. C. Towner or J. T. Harlan.

14. Except as specifically provided otherwise by this license, the licensee shall possess and use radioactive material described in Items 6, 7 and 8 of this license in accordance with statements, representations and procedures contained in the following documents:

    a. two applications dated February 11, 1963 signed by G. S. Williamson, and supporting material submitted therewith

    b. application dated June 27, 1963 signed by G. S. Williamson, and supporting material submitted therewith

16. Maintenance and repair of devices containing radioactive material, and leak testing, installation, replacement, and disposal of sealed sources containing radioactive material used in devices shall be performed only by Ohmart Corporation or persons specifically licensed to perform these tasks. The licensee is authorized to relocate each device containing radioactive material described in subitems A, C, and D provided that :

    a. The licensee shall not disassemble the device or remove the source of radioactive material from the device.

    b. The licensee shall notify, in writing, the Los Angeles County Health Department, Radiological Health Division, Old Hall of Records, Room 402, 220 North Broadway, Los Angeles, California 90012 not less than 5 days prior to relocation. The notification shall include the type of device, a description of its location at time of notification, a description of the location to which it is to be moved, and the expected date of relocation.

TORRANCE
SO-0015054

For the State Department of Public Health

Date May 5, 1965

By John M. Heslep

John M. Heslep, Chief
Bureau of Radiological Health
2151 Berkeley Way, Berkeley, Calif. 94704

Form RH 2551

STATE OF CALIFORNIA
DEPARTMENT OF PUBLIC HEALTH

RADIOACTIVE MATERIAL LICENSE
Supplementary Sheet

License Number 0559-70

Amendment No. 3

Shell Chemical Company
A Division of Shell Oil Company
19821 Hamilton Street
Los Angeles, California

In response to a letter dated April 19, 1965, license numbered 0559-70 is hereby amended as follows:

To add:

6. Radioactive material (element and mass number)	7. Chemical and/or physical form	8. Maximum quantity of material which licensee may possess at any one time
G. Hydrogen 3	G. Titanium tritide foil (U. S. Radium Corp.)	G. 8 sources not to exceed 250 millicuries each
H. Iodine 131	H. Any	H. 20 millicuries
I. Sulfur 35	I. Any	I. 10 millicuries

9. Authorized use

G. To be used as components of Wilkens Instrument & Research, Inc. gas chromatographs.

H and I. To be used for research and development as defined in Section 30175(n) of California Radiation Control Regulations.

TORRANCE

SO-0015055

18. The licensee is authorized to transfer, for burial in public dumps, solid rubbish containing radioactive materials in concentrations not exceeding that in California Administrative Code, Title 17, Section 30237, Schedule C.

19. Radioactive material described in subitems A, C, and D shall be tested for leakage and/or contamination at intervals not to exceed 3 years. Radioactive material described in subitem B shall be tested for leakage and/or contamination at intervals not to exceed 6 months.

20. Records of leak test results shall be kept in units of microcuries and maintained for inspection. Any leak test revealing the presence of 0.005 μc or more of removable radioactive material shall be reported to the State Department of Public Health, Bureau of Radiological Health, 2151 Berkeley Way, Berkeley, California 94704, within 5 days of the test. This report should include a description of the defective source or device, the results of the test and the corrective action taken.

21. The gas chromatographs containing titanium tritide shall not be operated at temperatures exceeding 225 degrees Centigrade.

To read:

12. **Radioactive material described in subitems A-D may be used only by, or under the supervision of, W. C. Towner or J. T. Harlan.**

14. **Except as specifically provided otherwise by this license, the licensee shall possess and use radioactive material described in Items 6, 7 and 8 of this license in accordance with statements, representations and procedures contained in the following documents:**

    a. **two applications dated February 11, 1963 signed by G. S. Williamson, and supporting material submitted therewith**

    b. **application dated June 27, 1963 signed by G. S. Williamson, and supporting material submitted therewith**

16. **Maintenance and repair of devices containing radioactive material, and leak testing, installation, replacement, and disposal of sealed sources containing radioactive material used in devices shall be performed only by Ohmart Corporation or persons specifically licensed to perform these tasks. The licensee is authorized to relocate each device containing radioactive material described in subitems A, C, and D provided that :**

    a. **The licensee shall not disassemble the device or remove the source of radioactive material from the device.**

    b. **The licensee shall notify, in writing, the Los Angeles County Health Department, Radiological Health Division, Old Hall of Records, Room 402, 220 North Broadway, Los Angeles, California 90012 not less than 5 days prior to relocation. The notification shall include the type of device, a description of its location at time of notification, a description of the location to which it is to be moved, and the expected date of relocation.**

TORRANCE
SO-0015056

For the State Department of Public Health

Date May 5, 1965

By John M. Heslep

John M. Heslep, Chief
Bureau of Radiological Health
2151 Berkeley Way, Berkeley, Calif. 94704

Form RH 2551

SHELL CHEMICAL COMPANY
A DIVISION OF SHELL OIL COMPANY
P. O. BOX 211
TORRANCE, CALIFORNIA 90509

TELEPHONE 323-3030
321-2340

SYNTHETIC RUBBER DIVISION
TORRANCE PLANT

June 8, 1965

Licensing Division
Bureau of Radiological Health
State Department of Public Health
1625 Shattuck Avenue
Berkeley 4, California

Gentlemen:

RE: Radioactive Material
License No. 0559-70

We are submitting for your approval an application to renew our Radioactive Material License No. 0559-70, in accordance with your May 25, 1965 expiration notice. There are no changes in the information submitted in our previous applications, including amendments.

Very truly yours,

Original Signed by G. S. Williamson

G. S. Williamson
Plant Manager

Attachments

cc: Los Angeles County Health., Attention: Mr. Jack Rogers

bc: N. R. Legge w/attachment
M. L. Sagenkahn w/o attachment
G. R. Harrington " "
N. K. Grover w/attachment Copy For
R. C. Mobley " "
J. T. Harlan " "
D. W. Fraga w/o attachment
M. W. Hansen " "
W. C. Towner w/attachment
Engr. File 602-1E w/o attachment
Engr. File 602-2E " "
Central Files " "

TORRANCE
SD-0015057

STATE OF CALIFORNIA
DEPARTMENT OF PUBLIC HEALTH

APPLICATION FOR RADIOACTIVE MATERIAL LICENSE

This application is not to be used by physicians or medical institutions applying for the "human use" of radioactive materials (see instructions).

Before completing this form, familiarize yourself with the detailed instructions, Form RH 2553, and with applicable provisions of State Department of Public Health regulations: Licensing of Radioactive Materials and Standards for Protection against Radiation, California Administrative Code, Title 17, Chapter 5, Subchapter 4, Groups 2 and 3.

Items 1 and 14 must be completed for all applications. Other items must be completed as described in the instructions.

Use supplemental sheets where necessary and include any other supporting documents or information which will aid in evaluation of this application.

Provide complete, clear, and accurate information.

Submit two completed copies of each application and two copies of all supplemental and supporting material to: Bureau of Radiological Health, State Department of Public Health, 2151 Berkeley Way, Berkeley 4, California.

1. (a) NAME AND ADDRESS OF APPLICANT. (Institution, firm, hospital, individual, etc.)
Shell Chemical Co., a Div. of Shell Oil Co.
19821 Hamilton St., Los Angeles, Calif.
(Mailing Address: P.O. Box 211, Torrance, Cal.

(b) STREET ADDRESS(ES) AT WHICH RADIOACTIVE MATERIAL WILL BE USED.
19821 Hamilton St., Los Angeles, Calif.
(This address represents Shell Chemical Company's entire Torrance Plant)

(c) This is an application for:
1. A new California license ☐
2. Renewal of California Radioactive Material License No. 0559-70
3. Amendment to California Radioactive Material License No. _____

2. DEPARTMENT(S) TO USE RADIOACTIVE MATERIAL AND PREVIOUS LICENSE NUMBER(S). (Indicate issuing agency if other than California.)

3. (a) RADIOACTIVE MATERIAL (b) CHEMICAL AND/OR PHYSICAL FORM (c) POSSESSION LIMIT* (at any one time)

TORRANCE
SO-0015058

*Units shall be pounds for source material, grams for special nuclear material, milligrams for radium and curies or millicuries for all others.

CERTIFICATE (This item must be completed by applicant.)

14. The applicant and any official executing this certificate on behalf of the applicant named in Item 1, certify that all information contained herein, including any supplements attached hereto, is true and correct to the best of our knowledge and belief. If this is an application for renewal or amendment to an existing California license, and if no information is supplied with regard to any of the items of this form, such information as has been supplied in previous applications concerning such items, remains true and correct to the best of our knowledge and belief.

Shell Chemical Company - Torrance Plant

Applicant named in Item 1

Date June 14, 1965 By: Original Signed by G. S. Williamson

G. S. Williamson

Plant Manager

Title of certifying official

TORRANCE

SO-0015059

Form RH 2552

Norm Grover 7/29/65

For your files. Original is being routed.

TORRANCE
SO-0015049

WCT

W. C. TOWNER

TORRANCE PLT.
JUL 27 1965
1 MGR.
SUPT. OPRS.
MAINT.
STY.
BUTA.
COPOLY
SHIP
3 SUPT. TECH 5
TECH
2 MICR.
LAB
cc Rio
TREAS.
Purch-Stores
4 GEN. F.
PER. HDL. ✓
DATE ENS.
FILE NO. 3 ov

Enclosed please find your Amendment No. 4 to California Radioactive Material License No. 0559-70.

We acknowledge receipt of the fee of 420.00 dollars for this amendment for the period ending July 25, 1966.

Bureau of Radiological Health
State Department of Public Health

4166

TORRANCE
SO-0015050

For the State Department of Public Health

Date July 21, 1965

by John M. Heslep

John M. Heslep, Chief
Bureau of Radiological Health
2151 Berkeley Way, Berkeley, California 94704

(REV. 1-65) FORM 2551
30490-450 3-66 SOM OSP

STATE OF CALIFORNIA
DEPARTMENT OF PUBLIC HEALTH

RADIOACTIVE MATERIAL LICENSE

Supplementary Sheet

License Number 0559-70

Amendment No. 4

Shell Chemical Company
A Division of Shell Oil Company
19821 Hamilton Street
Los Angeles, California

License numbered 0559-70 is hereby amended as follows:

To read:

4. Expiration date July 25, 1968.

TORRANCE
SO-0015051

For the State Department of Public Health

Date July 21, 1965

by John M. Heslep

John M. Heslep, Chief
Bureau of Radiological Health
2151 Berkeley Way, Berkeley, California 94704

(REV. 1-65) FORM 2551

SHELL CHEMICAL CO.

REVIEW OF PROPOSED PLANT EFFLUENT TREATMENT SYSTEM

JANUARY 1966

MONTGOMERY RESEARCH INC.
535 EAST WALNUT STREET
PASADENA, CALIFORNIA 91101

TORRANCE
SG-0045623

MONTGOMERY RESEARCH INC.
A DIVISION OF JAMES M. MONTGOMERY, CONSULTING ENGINEERS, INC.
535 EAST WALNUT STREET, PASADENA, CALIFORNIA, 91101
TELEPHONES: (213) 793-7128 AND (213) 681-5619

January 13, 1966

Mr. George Harrington
Manager, Engineering
Shell Chemical Company
P. O. Box 211
Torrance, California

Dear Mr. Harrington:

Transmitted herewith is our report entitled "Review of Proposed Plant Effluent System".

In this report, we have analyzed the waste characteristics and their adaptability to the proposed method of treatment to obtain an effluent meeting requirements of the present Water Quality Control Board.

The proposed plan of treatment is basically sound and is fundamental to any possible future secondary treatment for higher COD removal.

Suggested modifications for the initial installation include deletion of the acid feeding system, addition of a coagulant feeding and flocculation system, and some minor changes in configuration at the inlet and outlet end of the plant.

We have appreciated the opportunity of working with you on this project.

Very truly yours,

MONTGOMERY RESEARCH, INC.

William W. Aultman

W. W. Aultman
President

Richard S. Holmgren Jr.

R. S. Holmgren, Jr.
Project Engineer

TORRANCE
SG-0045624

TABLE OF CONTENTS

	Page
SECTION I - INTRODUCTION	
(a) Background of Report	I-1
(b) Findings and Conclusions	I-2
(c) Recommendations	I-3
SECTION II -QUANTITY AND CHARACTERISTICS OF FLOW	
(a) Volume of Flow	II-1
(b) Separation of Storm Water from Plant Effluent	II-1
(c) Present Treatment	II-1
(d) Laboratory Analyses During Study	II-3
(e) Biochemical Oxygen Demand	II-7
(f) Past pH and Settleable Solids Records	II-8
(g) Continuous pH Recording	II-9
(h) Coagulation Tests	II-10
SECTION III - REVIEW OF PROPOSED TREATMENT PROCESSES	
(a) Required Final Discharge Standards	III-1
(b) Proposed Future Standards	III-2
(c) Unit Processes Required	III-3
(d) Design Criteria	III-4
(e) Review and Suggested Modifications to Proposed Design	III-8
(f) Retention of Existing Facilities	III-9
(g) Reasons for Recommendation to Permit High pH and Present COD in Waste	III-9
(h) Estimated Cost of Plant	III-11
SECTION IV - SECONDARY TREATMENT	
(a) General	IV-1
(b) Trickling Filters	IV-1
(c) Activated Sludge Process	IV-1
(d) Wet Oxidation	IV-2
(e) Space Requirements	IV-3

TORRANCE
SG-0045625

TABLE OF CONTENTS

LIST OF TABLES

No.	Title	Page
II-1	Estimated Effluent Flows (After LRD, 9/17/65)	II-2
II-2	Effluent Separators-Basin Volume	II-3
II-3	Shell Chemical Industrial Waste Sampling Program	II-4
II-4	Biochemical Oxygen Demand (BOD)	II-7
II-5	Routine Analyses of Tri-Plant Effluent	II-8
II-6	Summary of pH Variation (From Chart - Uncalibrated)	II-9
II-7	Coagulation Tests	II-10
III-1	Water Pollution Board Requirements and Indicated Unit Treatment Processes	III-14
Plate	Shell Chemical Company - Proposed Waste Treatment Plant	Back of Report

TORRANCE
SG-0045626

SECTION I - INTRODUCTION

(a) BACKGROUND OF REPORT

For many years, Shell Chemical Company and other dischargers along Dominguez Channel have discharged untreated or partly treated wastes to the Channel. Prior to beginning of construction of the improved Channel, this did not create any particular nuisance conditions. At that time, there was no sea water in most of the Channel and it was believed that the wastes were too strong to sustain any biological activity and hence production of hydrogen sulfide gas.

When it was proposed in the latter 1950's by the Los Angeles County Flood Control District to improve the Channel for a distance of about 8 miles from the Harbor up to Vermont Avenue, concern was raised over the possibility that there might be an odor nuisance condition created in the Channel because the wastes might be diluted enough with sea water in the Channel to permit biological activity to take place. The gradient of the Channel is small enough so that sea water will stand in it for its entire improved length. As a result, the Los Angeles County Flood Control District commissioned Kennedy Engineers to make a study of bio-chemical activity in the Channel This report was submitted to the Flood Control District in 1959.

In 1962, the Los Angeles Regional Water Pollution Control Board No. 4 contracted with James M. Montgomery, Consulting Engineers, Inc., to perform additional studies on Dominguez Channel. Although construction work on the Channel was just getting under way at this time and none of the improved Channel had yet been flooded with sea water, the Board considered it necessary to predict conditions in the ultimate Channel in order that the Board could intelligently begin to prepare requirements for the waste dischargers. It was the intention of the Board that requirements would be established and would be imposed on the dischargers at the time the Channel was finished, or about mid-1966. The Montgomery report was completed and submitted to the Board in December of 1962.

During 1965, staff engineers of Shell Chemical Company, recognizing that some treatment of their discharges was required to meet requirements of the Board, began preparation of design criteria, preliminary drawings, schematics and control procedures for a proposed waste treatment plant.

When these preliminaries were well underway, Shell contracted with Montgomery Research Inc., to review the proposed treatment works in the light of present and possible future Pollution Board requirements for discharges.

TORRANCE
SG-0045627

SECTION I - INTRODUCTION

This review was authorized on November 10, 1965, and the results of the study are the substance of this report.

(b) FINDINGS AND CONCLUSIONS

The various findings and conclusions developed elsewhere in this report can be summarized as follows:

(1) Total waste stream flow from the three plants, exclusive of cooling tower water and storm water, may vary from 700 to 2000 gpm. The maximum future flow for design purposes is 2500 gpm.

(2) Each of the main streams has one or more existing separators which remove gross floating and settleable matter.

(3) A concentrated 4-day sampling program showed the following variations in significant Tri-plant characteristics:

Characteristics	Max.	Min.
pH	10.1	2.0
Settleable Solids (ml/l)	33	$<$ 0.1
Suspended Solids (ppm)	87	1
Turbidity (ppm S_1O_2)	76	20
Floatable oil (ppm)	4	0
COD	640	230
BOD: ppm @ 1:600 dilution	2580	306
ppm @ 1:30 dilution	230	80

(4) Coagulation tests run on a number of Tri-plant samples showed that excellent coagulation and settling could be achieved at the sample pH which varied from 8.9 to 9.4, with alum dosage of 10-20 ppm. The samples settled out almost clear. COD reduction in this process was 30-40 percent.

(5) The major unit processes needed to produce an effluent complying with the Pollution Board requirements at present are:

Automatic chemical addition for pH control
Chemical addition forcoagulation
Settling
Skimming
Sludge removal

TORRANCE
SG-0045628

If reduction in BOD is required in the future, additional biological treatment units will have to be constructed. This may require additional pH correction facilities.

(6) Provisions of acid addition facilities for downward adjustment of pH is not indicated at present.

(7) The proposed treatment plant, with minor modifications, will handle the waste satisfactorily, will produce a stream meeting present requirements of the Pollution Board, and will be required in the future as pretreatment if secondary treatment is required.

(c) RECOMMENDATION

On the basis of this investigation, the lab work and the design investigation, it is recommended that the proposed plant be built as shown, with the following changes:

(1) Modify the inlet structure to combine chemical addition, mixing, and flow measurement in one structure.

(2) Enlarge the 30,000-gallon "blending" section and convert it to a flocculation section.

(3) Add alum feeders and proportional flow equipment.

(4) Modify the skimming weirs at the end of the basin.

(5) Eliminate the sulfuric acid system, but provide space for it in the future.

In addition to the above specific plant recommendations, the following general recommendations should be noted:

(1) The program of separating storm and cooling tower water from waste stream should be rapidly implemented.

(2) The existing API separators on each stream should be retained.

(3) Shell Chemical together with the other Dominguez Channel users, should, on the basis of the December 1965 Montgomery Research

TORRANCE
SG-0045629

SECTION I - INTRODUCTION

"Report on Hydrogen Sulfide Study of Dominguez Channel", seek final determination from the Water Quality Control Board as to the amounts of COD which may be discharged to the Channel, so that appropriate planning can be started.

TORRANCE
SG-0045630

SECTION II - QUANTITY AND CHARACTERISTICS OF WASTE

(a) VOLUME OF FLOW

The three separate plants all operate 24 hours a day 7 days a week, consequently there is very little variation of flow during the day. An estimate was made of the quantities of flow from the various plants based on water demand by the staff of Shell Chemical. This estimate is reproduced on Page II-2 as Table II-1.

This table shows that a total of approximately 1960 gpm is the normal rate of flow. Actual measurements of the total stream, however, have varied from a minimum of about 700 gpm to a maximum of around 2000 gpm.

Any projections of future volume of waste stream are subject to changes in the production process and in possible expansions of the plant. For the purposes of this study, it is assumed that the maximum design capacity of the treatment works should be based on a flow of about 2500 gpm exclusive of storm water flow and flow from the cooling towers.

The design parameters for the treatment works will be based on this figure.

(b) SEPARATION OF STORM WATER FROM PLANT EFFLUENT

We have reviewed the proposed modifications to the drainage system to remove storm water from the effluent treating system. The proposed plan appears to be basically sound and is absolutely essential to proper operation of the waste treatment facility. We recommend that the necessary construction be carried out as rapidly as possible. We also recommend in this connection that the cooling tower water from the styrene and butadiene plants be removed from the process stream and discharged to the storm water system. Removal of this from the process stream should assist in reducing the volume, thus giving a more concentrated and more treatable waste.

(c) PRESENT TREATMENT

At the present time, each of the major plant effluent streams is given superficial skimming and settling treatment in pits or basins located in the discharge from each plant section. The volume of each of these separators is given in Table II-2 on Page II-3.

TORRANCE
SG-0045631

TABLE II-1

ESTIMATED EFFLUENT FLOWS (AFTER LRD, 9/17/65)

BUTADIENE	FLOW (gpm)
Cooling Towers	140
Boilers	60
150 Area	5
400 Area	15
100 Area	50
180 Area	5
490 Area	25
Misc	100
	400
STYRENE	
Cooling Towers	150
Boilers	50
2000 Area	30
1300 - 2300 Areas	30
Misc	40
	300
POLYMER	
Cooling Tower	30
5200, 5300, 5400, 5500	50
4200, 4300, 4400, 4500	50
3200, 3300, 3400, 3500	50
3800	50
3000	400
4000	460
5000	70
4700, 4900, Misc	100
	1260
TOTAL	1960

TORRANCE
SG-0045632

TABLE II-3

SHELL CHEMICAL INDUSTRIAL WASTE SAMPLING PROGRAM

Analysis Effluent Sample	Acidity meq/ml x 10^3	Alkalinity Pheno meq/ml x 10^3	Alkalinity Total Meq/ml x 10^3	pH	Settleable Solids (ml/l)	Suspended Solids (ppm)	Turbidity (ppm SO_2)	Floatable Oil (ppm)	Chlorides (ppm)	Chemical Oxygen Demand (ppm)
12/7/65 9 am										
Butadiene	-	0.78	3.50	8.8	0.2	17	13	3	-	-
Styrene	-	-	-	7.0	0.1	14	6	1	-	-
Polymer	-	-	-	7.4	< 0.1	293	40	5	-	-
Tri-Plant	-	2.52	4.20	9.5	< 0.1	33	58	2	3,230	513
12/7/65 3 pm										
Butadiene	-	0.87	2.80	9.0	< 0.1	23	1	3	-	-
Styrene	0.48	-	-	3.8	< 0.1	2	4	4	-	-
Polymer	-	0.10	2.40	8.0	< 0.1	30	63	1	-	-
Tri-Plant	-	1.90	4.10	9.2	< 0.1	24	60	2	-	-
12/7/65 9 pm										
Butadiene	-	0.78	3.50	9.2	< 0.1	5	12	1	-	-
Styrene	1.48	-	-	3.0	< 0.1	2	4	2	-	-
Polymer	-	0.10	2.10	7.7	0.1	65	38	3	-	-
Tri-Plant	-	1.60	3.40	9.2	< 0.1	24	55	3	4,360	540
12/8/65 3 am										
Butadiene	-	0.49	3.10	8.8	< 0.1	3	11	3	-	-
Styrene	-	-	0.78	6.8	< 0.1	15	4	2	-	-
Polymer	-	0.10	2.10	7.9	0.1	22	55	2	-	-
Tri-Plant	-	0.49	2.60	8.4	< 0.1	30	66	2	-	-
12/8/65 9 am										
Butadiene	-	0.49	3.10	8.5	0.1	1	14	-	-	-
Styrene	-	-	0.04	6.6	0.1	1	5	-	-	-
Polymer	-	-	1.90	7.1	0.1	11	66	2	-	-
Tri-Plant	-	0.87	2.60	8.7	0.1	9	61	1	3,520	640
12/8/65 3 pm										
Butadiene	-	0.78	3.10	8.5	0.1	113	33	1	-	-
Styrene	-	-	-	4.1	0.1	264	275	-	-	-
Polymer	-	-	2.00	7.5	0.1	333	57	-	-	-
Tri-Plant	-	-	0.78	6.8	33	87	55	-	-	-

TORRANCE
SG-0045634

TABLE II-3

SHELL CHEMICAL INDUSTRIAL WASTE SAMPLING PROGRAM
(Continued)

Analysis Effluent Sample	Acidity meq/ml x 10^3	Alkalinity Pheno meq/ml x 10^3	Alkalinity Total meq/ml x 10^3	pH	Settleable Solids (ml/l)	Suspended Solids (ppm)	Turbidity (ppm SO_2)	Floatable Oil (ppm)	Chlorides (ppm)	Chemical Oxygen Demand (ppm)
12/8/65 9 pm										
Butadiene	-	0.68	3.20	8.5	0.1	63	9	-	-	-
Styrene	-	-	0.87	6.7	0.1	36	5	-	-	-
Polymer	-	-	1.80	7.2	0.1	13	128	1	-	-
Tri-Plant	-	3.40	5.20		0.1	65	52	-	2,160	360
12/9/65 3 pm										
Tri-Plant	-	0.58	2.30	8.7	0.1	80	76	-	-	-
12/11/65 9 am										
Butadiene	-	-	2.2	7.4	0.1	1	21	-	-	-
Styrene	-	0.19	0.97	8.9	0.1	1	4	-	-	-
Polymer	-	-	0.97	6.8	7.5	8	31	-	-	-
Tri-Plant	-	2.40	4.50	9.6	4.0	24	44	-	-	-
12/11/65 3 pm										
Tri-Plant	-	1.30	3.00	9.0	0.1	1	20	1	1,320	280
12/11/65 9 pm										
Tri-Plant	-	0.10	1.60	8.4	0.1	1	28	2	-	-
12/12/65 3 am										
Tri-Plant	-	-	1.40	7.9	0.1	8	23	4	975	230
12/12/65 9 am										
Tri-Plant	-	-	1.70	8.0	0.3	52	29	1	-	-
12/12/65 9 pm										

TORRANCE
SG-004563

TABLE II-3

SHELL CHEMICAL INDUSTRIAL WASTE SAMPLING PROGRAM
(Continued)

Analysis Effluent Sample	Acidity meq/ml x 10^3	Alkalinity Pheno meq/ml x 10^3	Alkalinity Total meq/ml x 10^3	pH	Settleable Solids (ml/l)	Suspended Solids (ppm)	Turbidity (ppm SO_2)	Floatable Oil (ppm)	Chlorides (ppm)	Chemical Oxygen Demand (ppm)
Tri-Plant 12/13/65 3 am	-	3.10	4.60	9.6	0.1	7	20	2	-	-
Tri-Plant 12/13/65 9 am	-	2.10	3.80	9.4	0.1	64	31	1	1,465	260
Tri-Plant	-	2.80	4.20	10.1	8.0	69	28	1	1,078	280

Analysis	Reference (or Explanation)
Acidity (Mineral)	Betz Handbook of Industrial Water Conditioning Titration with Na_2CO_3 to methyl orange end point
Alkalinity (Phenopthalein)	TAM VII-1-53, Determination of Alkalinity of Water (Phenopthalein end point)
Alkalinity, Total	TAM VII-1-53, Determination of Alkalinity of Water (Methyl orange end point)
pH	TAM VII-11-53, Determination of pH of Water
Settleable Solids	Determination of Total Settleable Solids in Plant Effluent: Butadiene Plant Operating Order, J-VI-5
Suspended Solids	API-709-53, Solids: Total, Dissolved, Suspended, Settleable Modified by using "center-cut" sample from settleable Solids Test; also Buckner funnels with Whatman No. 5 filter paper were used to trap suspended solids
Turbidity	ASTM D-1889-61T, Turbidity of Industrial Water, Nephelometric method using a Hellige Turbidimeter
Floatable Oil	Method based on three surface extractions with 50 ml of petroleum ether upon a sample that has been standing one hour
Chlorides	TAM VII-2-53, Determination of Chlorides in Water
Chemical Oxygen Demand	TAM VII-40-65, Determination of Chemical Oxygen Demand

TOFRANCE
SG-004563

(e) BIO-CHEMICAL OXYGEN DEMAND

In addition to the samples shown above, separate analyses were also made on the bio-chemical oxygen demand (BOD). These samples were taken at the same time the tri-plant effluent samples were taken and analyzed. The results of these BOD analyses are given in Table II-4.

TABLE II-4

BIOCHEMICAL OXYGEN DEMAND (BOD)
Five-day Incubation at 20°C

Sample No.	Date	Time	BOD Dilution 1:600	1:300	1:150	1:60	1:30
I	12/7	10:03 am	486	657	288	122	91
II	12/8	8:59 am	1572	418	85	125	80
III	12/8	9:06 pm	2580*	162	170	117	111
IV	12/8	9:10 pm	681	180	132	104	88
V	12/11	3:00 pm	420	309	191	151	110
VI	12/12	3:15 am	306	252	169	131	166
VII	12/13	2:57 am	1530	542	518	359	230
VIII	12/13	9:22 am	1038	732	429	302	187

* BOD was same with Dilution Factor of 1:3000 in this sample

TORRANCE
SG-0045637

(f) PAST pH AND SETTLEABLE SOLIDS RECORDS

Prior to the above analyses for the purposes of this report, a summary was made of the pH and settleable solids for the period of March through August, 1965. This table is reproduced as Table II-5.

TABLE II-5

ROUTINE ANALYSES OF TRI-PLANT EFFLUENT
(Analysis Bi-hourly by BD Waste Disposal Operator)

A. pH

Month	Lowest Reported pH	Highest Reported pH	No. of Analyses with pH below 6.5	No. of Analyses with pH above 9.0	Reported Average
3/65	4.5	9.7	13	49	8.3
4/65	1.8	10.0	64	22	7.7
5/65	3.0	10.9	27	46	8.0
6/65	2.9	11.4	20	57	8.2
7/65	2.0	11.3	21	42	
8/65	3.3	11.1	15	22	7.9

B. Settleable Solids

Month	Reported Daily Results (Average of 12 Daily Analyses) - ml/liter		
	No. Days >1.0	Maximum Daily Average	Average for Month
3/65	21	6.0	2.2
4/65	20	27.6	4.3
5/65	19	12.7	2.9
6/65	21	16.9	5.0
7/65			
8/65	11	7.5	1.6

TORRANCE
SG-0045638

(g) CONTINUOUS pH RECORDING

During the period of the concentrated sampling program of December 7 through 12, 1965, a recorder was placed on the tri-plant effluent to give continuous reading of pH. This recorder was kept in operation through December 20, 1965. Although there is some lack of agreement between the schedule sampling analyses for pH and actual pH shown on the recorder, nevertheless, the gross deviation in pH from the normal showed up sufficiently well to give an indication of frequency and degree of variation. The results of this recording are tabulated in Table II-6.

TABLE II-6

SUMMARY OF pH VARIATION (FROM CHART - UNCALIBRATED)

Date - (Dec)	Normal pH	Min pH	Duration of Min	Max pH	Remarks
3	8-9	5.5	1 Hr	9.0	
4	9	6.0	2 Hr	9.2	
		6.5 - 8	6 Hr	9.0	
5	8-9	6-7	3 Hr	9.0	
6	8.6	2.5	45 Min	8.6	
7	8.8	2.0	15 Min	8.8	
		4.0	30 Min		
9-10	8-9	2.0	5 Min	10.4	Rain
11	8-9	5.0	10 Min	9.1	Rain
12	9.0	6.8	--	9.5	
14	8.8	4.0	1 Hr	9.2	
15	6-9	2.0	10 Min	9.5	
16	8-9	2.0	15 Min	9.2	
		2.5	1 Hr	9.2	
17	8.8	3.0	2.5 Hr		
18	8.4	2.5	1 Hr		
			15 Min		
		3.0	5 Min	9.0	
19	8.8	5.5	15 Min	9.8	
20	8.6	2.0	5 Min	9.2	
		2.0	5 Min		
		5.4	45 Min		

TORRANCE
SG-0045639

(h) COAGULATION TESTS

A number of coagulation tests were made to determine if the waste would coagulate easily, and if so, under what pH condition. Results of several typical tests are summarized below in Table II-7.

TABLE II-7

COAGULATION TESTS

Date of Sample	Time of Sample	Initial pH	Final pH	ppm Alum For Good Coagulation	Remarks
Dec 7	10 am	9.3	8.9	10-30	
Dec 7	3 pm	8.9	8.7	10-30	
Dec 11	9 am	9.4	9.3	10-20	
Dec 11	9 am	9.4	9.1	20-30	(Coagulant ferric sulfate)
Dec 7	3 pm	7.5*	--	Poor coagulation	*Adjusted from 8.9
Dec 7	3 pm	8.0*	7.7	10-20 but small floc	*Adjusted from 8.5

TORRANCE
SG-0045640

SECTION III - REVIEW OF PROPOSED TREATMENT PROCESS

(a) REQUIRED FINAL DISCHARGE STANDARDS

The present standards for the waste discharge as contained in Industrial Waste Permit No. 1448, dated July 28, 1955 and issued by the Industrial Waste Division of the Los Angeles County Engineer are reproduced below:

"(1) This permit shall apply to the disposal of all solid and liquid industrial wastes as discharged into the unincorporated portions of Los Angeles County by the Shell Chemical Corporation, Synthetic Rubber Plant, as shown on Map No. YT-3479 as submitted to the County Engineer on May 31, 1955, which is made a part of this permit. The plant is located at 19821 South Figueroa Street, within the City of Los Angeles.

(2) The permittee shall take samples of the effluent discharged into the Dominguez Channel at regular intervals and keep a record of the analyses of these samples for review by the County Engineer, County Health Officer, or other County officials upon request.

(3) Wastes discharged into Dominguez Channel shall not cause formation of objectionable deposits of sludge. In general, settleable solids shall not exceed 1.0 cc per liter.

(4) Wastes discharged into Dominguez Channel shall not contain oil in excess of 75 ppm, and shall not cause objectionable discoloration of receiving waters in the Channel except for brief periods of emergency, and in such event only in the immediate vicinity of the point of discharge.

(5) Effluent discharged shall not cause damage to private or public structures or property. The pH shall be maintained at not less than 6.5.

(6) Discharged effluent shall not contain toxic wastes in concentrations sufficient to endanger public health or affect the use of lands in the vicinity for agricultural purposes.

(7) Waste discharged shall not cause or create odors to the extent that they are a public nuisance. Dissolved sulfides in such discharges shall not exceed 1.0 ppm.

TORRANCE
SG-0045641

(8) All solid industrial wastes shall be transported to a legal point of disposal.

(9) Liquid industrial wastes may be discharged to a sewer having an ocean outfall provided that such discharge is of such character as to be acceptable in such sewers.

(10) Representatives of interested governmental agencies shall be permitted access at any reasonable time to make inspections and take samples as they may consider necessary.

(11) The County Engineer may modify this permit by the addition or elimination of conditions as may be necessary to accomplish the purpose of County Ordinance No. 6130 (Sanitary Sewer and Industrial Waste Ordinance) or to conform with standards for the discharge of industrial wastes into Dominguez Channel as may be established by affected governmental agencies having authority over the disposal of such wastes.

(12) Violation of any of these conditions of this permit shall be cause for immediate suspension and possible revocation of this permit."

(b) PROPOSED FUTURE STANDARDS

The following requirements are now under consideration by the California Regional Water Pollution Control Board No. 4 and will, if adopted, supersede those presently in effect. "The following proposed requirements shall be uniformly applicable to all waste discharges into Dominguez Channel:

(1) Wastes discharged to the Dominguez Flood Control Channel shall contain no substances in concentrations sufficient to cause damage to flood control structures or facilities.

(2) Wastes discharged shall not contain settleable matter in excess of 1.0 ml per liter on a volume basis, nor any other material or substance in concentrations sufficient to cause the formation of objectionable deposits of sludge in the channel.

(3) Wastes discharged shall not contain phenols, mercaptans, or other substances in concentrations that would produce objectionable odors at the surface of the receiving waters.

TORRANCE
SG-0045642

(4) Wastes discharged shall not cause the appearance of grease, oil, or oily slick, or visible solids of waste origin in the receiving waters or upon the channel banks.

(5) Wastes discharged during any single calendar day shall not contain more than 750 pounds (this amount applies only to Shell Chemical) of chemical oxygen demand (COD).

(6) Wastes discharged shall not cause dissolved oxygen concentrations in the receiving waters to fall below 0.5 ppm.

(7) The dumping of garbage, rubbish, or other solid wastes into the waters of Dominguez Channel is prohibited. All wastes of such nature shall be transported to a legal point of disposal.

(8) Wastes discharged shall at no time have a pH less than 6.0.

(9) Wastes discharged shall not cause concentrations of toxic materials in the outer harbor waters of the Los Angeles-Long Beach Harbors which would be detrimental to human, animal, plant, fish, or bird life.

(10) Wastes discharged shall not cause discoloration of the waters of Dominguez Channel to an extent that would constitute a nuisance as defined in Section 13005 of the Water Code of the State of California, or to an extent that would cause discoloration of the waters of the Los Angeles-Long Beach Harbors.

(11) Wastes discharged shall not cause foaming or turbidity in the waters of Dominguez Channel to an extent that would constitute a nuisance, or to an extent that would result in the appearance of foaming or turbidity in the waters of Los Angeles-Long Beach Harbors."

(c) UNIT PROCESSES REQUIRED

In order to meet the present or future standards established by the WPCB, it is necessary that the combined waste be given treatment. A table showing the maximum permitted values of the controlled characteristics, and the unit processes required to bring the wastes into compliance, is shown below as Table III-1.

TORRANCE
SG-0045643

TABLE III-1

WATER POLLUTION BOARD REQUIREMENTS AND INDICATED UNIT TREATMENT PROCESSES

Requirement	Present Limit	Proposed Limit	Unit Process
Settleable solids	1.0	1.0	Settling
Oil	75 ppm		Flotation and skimming
Objectionable coloration	None	None	Coagulation and settling
pH (Minimum value)	6.5	6.0	Caustic addition
Toxic wastes	None	None	Remove from stream
Oil slicks, receiving waters, etc.	None	None	Skimming
COD	--	750 ppd	Coagulation and settling and secondary treatment
DO in channel	--	0.5 ppm	Remove COD by secondary treatment
Discoloration, foaming, and turbidity	--	No nuisance	Coagulation and settling

(d) DESIGN CRITERIA

In the design of the treatment plant, unit processes that must be included are the following:

TORRANCE
SG-0045644

Chemical Addition

Mixing

Flocculation

Coagulation

Sedimentation

Skimming

Sludge Removal

These unit processes will satisfactorily treat the waste stream to meet all requirements except those for reduction of COD beyond the 30-40 percent automatically obtained through the coagulation and settling process. It is not felt necessary at this time to install secondary treatment facilities to produce further COD removals, for reasons which are set forth in Section IV.

On the basis of the laboratory analyses and on the previous investigations done by the Shell staff, the following design parameters and criteria are suitable:

(1) Chemical addition:

Facilities should be included to proportionally feed the following chemicals:

Sodium hydroxide for pH control

Aluminum sulfate solution (alum) for coagulation

It does not appear necessary to add sulfuric acid to the waste since in every case tested, good coagulation occurred at pH as high as 9.4 in the raw sample. This pH is not frequently exceeded in the waste. In addition, as discussed in Subsection (f) of this section, reduction of pH in the final effluent may be actually detrimental to the overall condition of the Channel.

TORRANCE
SG-0045645

TABLE II-2

EFFLUENT SEPARATORS - BASIN VOLUME

Location	Superficial Basin Vol. (gal)
A. POLYMER	
Primary	6,000
Secondary	25,800
Field Pit	43,000
B. STYRENE	
Primary - "Acid Section"	13,200
Primary - "Floc Section"	7,600
Primary - "Settling Section"	62,300
Secondary	47,000
C. BUTADIENE	
Skimmer Basin	18,400

Each of the above separators require draining for removal of accumulated sludge except for the primary settling basin in the styrene plant, which has sludge removal facilities.

In addition to the above settling basins, a number of straw filters are located on the main effluent lines of the various process streams. These straw filters are used to remove oil from the flow before discharging it into the channel. When waste flow is separated from the storm sewer system, these straw filters will remain in place, but will treat only the storm water run-off. It may be possible to remove these from the system at that time.

(d) LABORATORY ANALYSES DURING STUDY

In order to produce a concentrated and correlated program of waste sampling, a four-day sampling program for each of the streams was undertaken. The results of this sampling program are given in Table II-3.

TORRANCE
SG-0045633

pH control can be adequately handled by the system worked out by the Shell staff involving a continuously operating pump and varying dosage depending on amount of variation of pH from the selected value. Alum dosage pump should be capable of dosing 50 ppm (2-1/2 times probable dosage) into a flow of 2500 gpm. This pump should have either stroke or speed adjustment paced to flow transmission from the Parshall flume. Capacity is as follows:

Maximum feed rate	16.5 gpm
Minimum feed rate	1.0 gpm

(Based on 3.8 lb alum/gallon water)

(2) CHEMICAL MIXING AND FLOCCULATION

Mixing of chemicals can logically be divided into three phases. These are (1) flash mixing, (2) short-term contact and neutralization and (3) flocculation. The first two are to be used for pH neutralization and the third for floc formation in connection with the coagulation process. With the configuration proposed, mixing and neutralization will occur simultaneously in the 10 ft by 10 ft by 10 ft tank; however, an additional mixer could be installed later if required. Criteria for mixing and neutralization as proposed by Shell are satisfactory. These are - (at nominal flow of 1900 gpm) - 5 minutes contact; or

5 x 1900 = 9500 gal

Dimensions should be approximately 11-by-11-by-11 water depth, or, if circular, about 12 feet in diameter by 12 feet high. Each of these will give slightly less than 4 minutes detention at maximum flow of 2500 gpm, which will be satisfactory.

Energy to be placed into the mixing process should be 25 to 50 horsepower, as recommended by the Shell computer study. The actual horsepower can be established at the time of design, when actual structure dimensions are established.

TORRANCE
SG-0045646

Flocculation time should be, on the basis of the lab "jar tests", between 20 and 30 minutes. At maximum flow of 2500 gpm, and 20 minutes of flocculation, flocculation volume required is 50,000 gallons.

(3) COAGULATION AND SEDIMENTATION

The unit processes of coagulation and sedimentation are necessary to reduce the suspended solids in the plant waste and to reduce the turbidity; The mechanism of flotation in the same structure will skim the remaining oil from the surface of the waste.

Design criteria for the sedimentation processes should be based on conventional figures used for clarification with alum as a coagulant. These parameters are as follows:

Surface Loading:	900 gallons per day per square foot
Detention Time:	2 hours
Horizontal Velocity:	Less than 3 feet per minute
Effluent Weir Loading:	Less than 20,000 gallons per day per linear foot of weir

The actual criteria for the basin as proposed by the Shell staff with one exception will very closely approximate these design criteria:

Actual surface loading at 2500 gallons per minute will be 900 gallons per day per square foot.

Actual detention time for the same rate of flow, assuming a 10-foot water depth, would be exactly 2 hours.

Horizontal velocity will be less than one foot per minute.

Effluent weir loading is about 90,000 gallons per day per foot, substantially in excess of the recommended amount.

In general, we recommend that the basin configuration be retained as proposed. However, in order to prevent localized increases in velocity near the end of the basin, it would be desirable to provide a substantial increase in the total feet of weir. At the present time, there is only

TORRANCE
SG-0045647

20 feet of collecting weir in each basin. In order to meet the criteria of not more than 20,000 gallons per day per foot, at least 90 feet of weir should be provided in each basin. We recommend that this modification be made in the basin and a tentative arrangement is shown on the attached layout sketch.

The skimming facilities for the basin will be satisfactory, except that it may be desirable to provide a motor-operated, rolling-type skimmer which will more efficiently remove the small amount of floating oil with little water being collected at the same time.

(e) REVIEW AND SUGGESTED MODIFICATIONS TO PROPOSED DESIGN

On the basis of the laboratory investigations and comparison of the proposed plant design with established design criteria, we feel that the basic arrangement and sizing of facilities will operate in a generally satisfactory manner.

There are several modifications, however, which we feel would improve the overall efficiency and flexibility of the plant to handle the expected loadings. These suggested modifications are listed below:

(1) Modify the inlet and neutralizing section of the plant as shown in the accompanying sketch to increase efficiency and decrease overall space requirements.

(2) Eliminate the small mixer shown at the end of the Parshall flume and instead concentrate all of the mixing in the 10-foot square neutralizing section. It is felt that the arrangement of inlet and outlet of this basin plus use of turbine-type mixers rotating as shown will provide efficient blending and neutralization of the flow.

(3) Enlarge the 30,000-gallon blending section and convert it into a flocculation section by installing appropriate equipment.

(4) Add alum feeders and proportional control based on rate of flow of the Parshall flume.

(5) Modify the skimming weirs at the outlet end of the basin to provide approximately 70 additional feet of collecting weir in each basin. This will prevent the resuspension of material that has been settled out near the effluent end of the plant.

TORRANCE
SG-0045648

(6) Eliminate the sulfuric acid storage feeding and control apparatus. The laboratory coagulation tests show that excellent coagulation was obtained at normally high pH's and that there was no necessity for reducing normal pH for this purpose.

If in the future it is necessary to reduce pH at the effluent end of the plant before any secondary treatment, this can be added at a later date.

It should be pointed out at delivery of waste discharges with a high pH will have a beneficial effect on Dominguez Channel. This point is covered in the Montgomery Research Inc., "Report on Hydrogen Sulfide Study of Dominguez Channel", December, 1965. This point is also discussed in Subsection ("f") below.

(7) If it is possible, we recommend that the plant be raised slightly above presently planned elevation. If this is possible, it would enable all structures in the plant to be drained into the existing drain sewer when they are dewatered for cleaning. As it stands now, the structures will have to be pumped dry at these times. This is a point which should be considered when detailed design is started.

(f) RETENTION OF EXISTING FACILITIES

It is recommended that all of the existing separation units on the existing waste lines be retained in operation as they are currently being used. These units are taking a very large percentage of the load, particularly of floating oil and scum, and thereby, will enable the proposed new treating facility to handle it's final share of the waste without difficulty. Should the existing facilities be abandoned, another structure would probably be necessary to substitute for these existing facilities.

(g) REASONS FOR RECOMMENDATION TO PERMIT HIGH pH AND PRESENT COD IN WASTE

Elsewhere in this report, it has been recommended that no facilities be provided for sulfuric acid addition to lower the pH of the waste, and also that no additional facilities be included for further reduction of COD. These recommendations are based on the December 1965 "Report on Hydrogen Sulfide Study of Dominguez Channel" by Montgomery Research, Inc. The results of this study are discussed below.

TORRANCE
SG-0045649

First, however, it should be understood that the original December 1962 Montgomery report did not attempt to predict what would happen if Dominguez Channel should become devoid of dissolved oxygen. Rather, it studied the wastes being discharged to the Channel at that time (1962), estimated the oxygen resources of the Channel, estimated diffusion in the Channel, and attempted to predict what waste loading could be allowed without depressing the dissolved oxygen content of the Channel below 0.5 ppm. This was in accordance with the stipulation of the Water Pollution Board, under which the study was performed. The Board assumed, as many practicing sanitary engineers do, that hydrogen sulfide will be produced whenever bio-degradable organic materials exist for any length of time in an environment devoid of dissolved oxygen.

While this occurs frequently enough to account for such a widespread opinion, it was the belief of the Montgomery engineers that this might not always be the case. Since the findings of the original Montgomery report would have required the dischargers along Dominguez Channel to reduce their BOD output to approximately one-sixth of its 1962 value in order to meet the State Pollution Control Board's dissolved oxygen criteria, it appeared that investigation of alternate methods for accomplishing the objective of the Pollution Control Board should be investigated. Montgomery Research, Inc. proposed such studies to the Refiners' Committee for Waste Disposal, which represented most of the dischargers. The Refiners' Committee subsequently authorized this firm to prepare two reports on the feasibility of introducing oxygen to Dominguez Channel by artificial means and at the same time investigated other possibilities for disposing of the waste, including the feasibility of discharge to the County Sanitation Districts' sewer system. Nothing was done initially on the matter of evaluating the possibility of continuing to discharge waste to the Channel without creating an odor nuisance. This would have been premature at that time (1963), because the Channel was just beginning to undergo improvement and so field measurements would have been so limited as to be virtually meaningless. At the same time, however, it was felt desirable to complete such an investigation as soon as possible in order to allow time for evaluation of the results, negotiations with the Regional Water Pollution Control Board, and design and construction of waste handling or treatment facilities if necessary, before the completion of improvement to the channel and the concomitant imposition of discharge requirements by the Board. Therefore, in June of 1965, the Dominguez Channel Users' Group authorized Montgomery Research, Inc. to proceed with a study of the production of hydrogen sulfide gas in Dominguez Channel.

TORRANCE
SG-0045650

The Dominguez Channel Users' Group, as well as Montgomery Research Inc. were encouraged to undertake the study by the fact that no significant reduction had been made in the 1962 waste discharge flows; that these wastes were entering the Channel which was at that time two-thirds complete, and contained sea water; and that no odor nuisance conditions existed. The Montgomery Research Inc. report, delivered to the Dominguez Channel Users' Group on December 31, 1965, concluded that hydrogen sulfide production would not occur to a significant extent in Dominguez Channel under present conditions of organic loading if the pH could be kept high and if the dissolved oxygen currently entering the Channel from the Los Angeles Harbor continued to be available.

It was concluded that the presence of dissolved oxygen throughout the entire Channel was not necessary for the control of hydrogen sulfide production. For this reason, the proposed WQCB discharge requirements as determined from the 1962 Montgomery report are felt to be too restrictive to serve as a rational basis for waste discharge controls on discharges to Dominguez Channel. On this basis we recommend that initial construction, at least, provides for high pH in the discharge, and for no additional secondary units for reducing the COD.

(h) ESTIMATED COST OF PLANT

We have completed a preliminary estimate of the construction cost of the plant, based on the criteria presented above. This estimate is for the plant and appurtenances only, and does not include the influent or effluent piping to connect the plant into the existing system.

The preliminary estimate is as follows:

Equipment installed	$53,000
Tanks	15,000
Structures and miscellaneous	80,000
TOTAL	$148,000
Overhead and profit @ 20 percent	30,000
	$178,000
Contingencies @ 10 percent	$ 18,000
TOTAL	$196,000

TORRANCE
SG-0045651

SECTION IV - SECONDARY TREATMENT

(a) GENERAL

The unit operations comprising the treatment process recommended for installation by Shell Chemical Company at present fall in the category known as primary treatment. Primary treatment includes chemical or physical processes, such as pH adjustment and sedimentation. Primary treatment usually does little to reduce BOD attributable to dissolved organic matter in a waste stream. The most effective means of reducing dissolved BOD normally is biological treatment, known as secondary treatment.

The two processes most commonly employed for secondary or biological treatment are the trickling filter and the activated sludge process. Both involve contact between the waste water stream and a crop of microorganisms which feed upon organic matter in the stream. In the process, the organisms multiply and grow, converting dissolved organic matter into biological mass. The latter is then removed from the purified waste by secondary sedimentation.

(b) TRICKLING FILTERS

A trickling filter typically consists of a bed of rounded stones from 4 to 8 feet deep and circular in plan. The waste, after primary treatment, is applied to the surface of the stones by a rotary distributor, and trickles down through the stones. A growth of microorganisms forms on the stones and removes BOD from the liquid. The waste is collected by a system of underdrains and passes to a secondary clarifier.

The trickling filter usually has solid concrete walls, but is provided with vents at the bottom so that air can circulate through the filter bed. The process is aerobic; oxygen is required for the microorganisms. Trickling filters are relatively inexpensive, simple to operate, and are resistant to the upsetting effects of pH changes, toxic materials, etc. On the other hand, a trickling filter requires more ground area than an activated sludge installation of like capacity, and imposes a head loss on the waste stream on the order of 10 to 15 feet.

(c) ACTIVATED SLUDGE PROCESS

In the activated sludge process, microorganisms exist in the form of a suspension, or sludge, in the waste being treated. The primary effluent flows into a large contact tank, in which it mixes with the sludge. It is mixed and kept supplied with oxygen by compressed air diffusors located near the bottom

TORRANCE
SG-0045652

of the tank. After contact with the sludge for a period of about 6 hours, the treated waste flows into the secondary clarifier, where the sludge is settled out. Some of the sludge is returned to the process and the excess, which represents the growth due to removal of organic matter from the waste stream, is disposed of (as is waste sludge from a trickling filter), usually together with sludge produced in the primary portion of the treatment plant. The activated sludge process conserves the head of the waste stream and requires less area for installation than does a trickling filter. It generally also gives a somewhat higher degree of BOD removal and a better effluent. However, the activated sludge process is more sensitive to upsets brought about by sudden changes in the character of the waste stream; requires power for compressing air; and requires more manpower for supervision and operation than does a trickling filter.

(d) WET OXIDATION

A third process for BOD removal is known as wet oxidation. Although not a biological process, this is usually considered a secondary process because it follows the normal primary treatment steps in most cases and because its purpose is to remove dissolved BOD which cannot be removed by primary treatment. In the wet oxidation process, which is used for sludge treatment in some domestic sewage treatment plants and for waste treatment of some industrial wastes, the waste stream is pumped into a reactor vessel where the temperature and pressure are very high. The temperature and pressure vary; temperatures are usually on the order of several hundred degrees Centigrade ad pressures are correspondingly high. Compressed air is added to the reactor; the oxygen so introduced will, at these elevated temperatures and pressures, combine chemically with organic material in the water thus stabilizing the waste. This oxidation process generates heat and if the waste is not too dilute, sufficient heat may be generated to make the process self-sustaining from that standpoing and there may even be excess heat for other uses. However, if the waste is too dilute, supplemental heat may be required to sustain the process.

A heat exchanger is employed so that the incoming waste is brought to reaction temperature by the outgoing material which is, of course, cooled in the process.

The wet oxidation process is quite expensive compared to biological treatment, and requires more supervision and operation and perhaps power. On the other hand, it usually requires a minimum of space.

TORRANCE
SG-0045653

The major item of equipment is a cylindrical vertical reactor which occupies only a small ground area. It is virtually immune to upset from changes in the waste stream character.

(e) SPACE REQUIREMENTS

At the present time, secondary treatment does not appear indicated for the waste from the Shell Chemical Company plant at Torrance. This is discussed in Section III. Detailed evaluation and selection of a secondary treatment process, therefore, is not undertaken as part of the present study. However, the possible future inclusion of secondary treatment has been considered in matters of hydraulic and physical layout of the presently proposed treatment facilities. Thus, secondary treatment, if required at a later date, can be added with a minimum of modification to the presently proposed facilities.

In the event it is necessary to provide secondary treatment facilities in the future, some space should be reserved for this purpose now. We recommend that a space of approximately 250 feet by 350 feet be provided. This is based on the required dimensions of a trickling filter and secondary clarifier, and will be ample for any of the other processes that will probably be considered. We recommend that this space be reserved in the open space directly west of the currently proposed facilities.

TORRANCE
SG-0045654

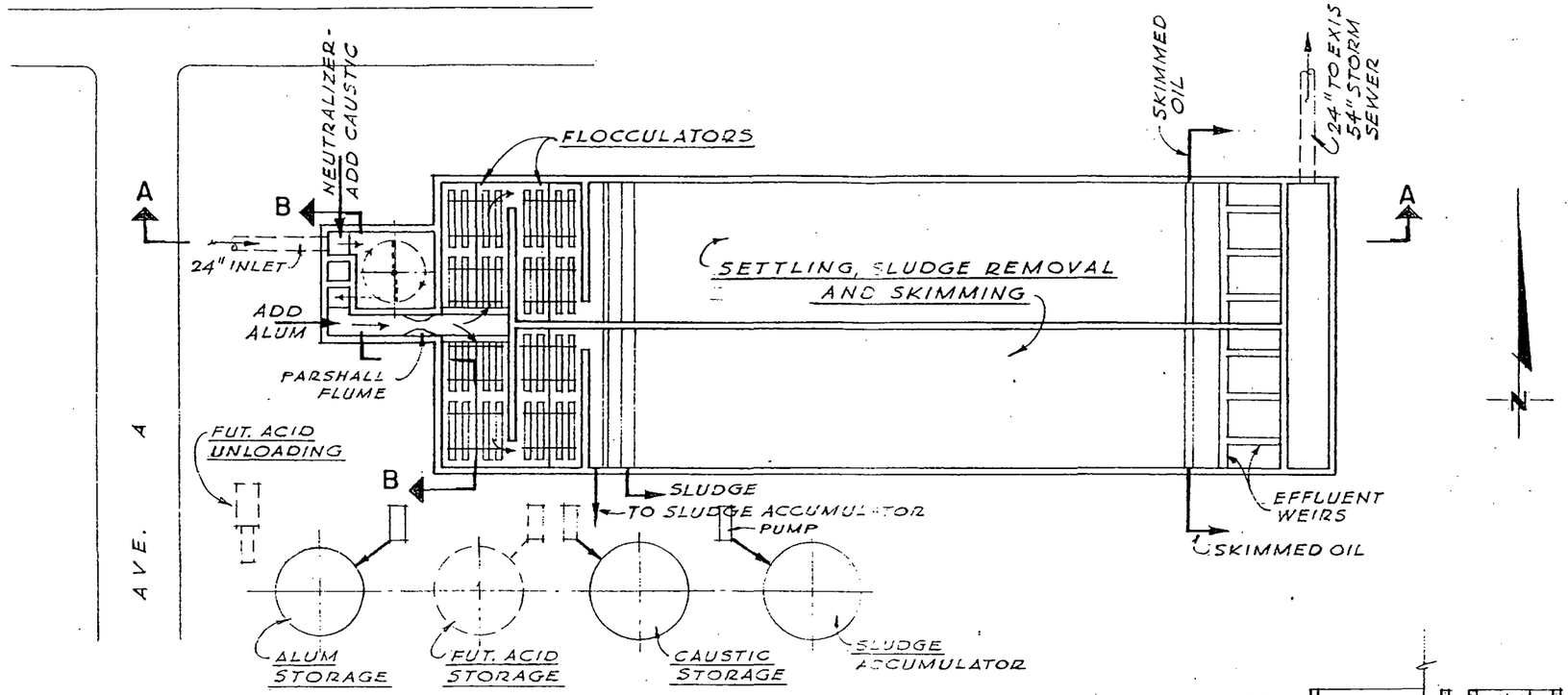

PLAN

SCALE: 1" = 20'

0 20' 40'

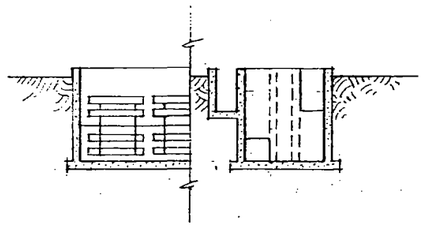

SECTION B–B

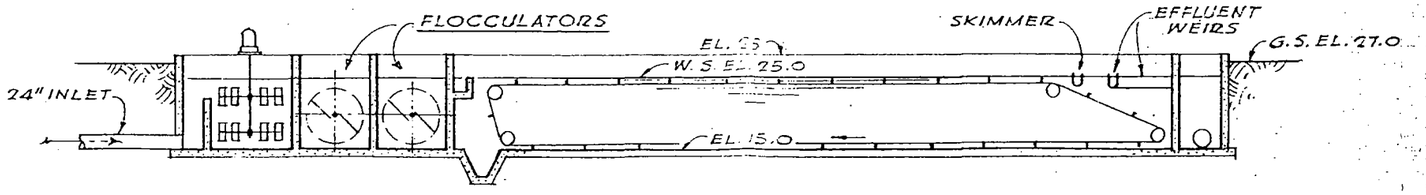

SECTION A–A

TORRANCE
SG-0045655

SHELL CHEMICAL COMPANY
PROPOSED WASTE TREATMENT PLANT

JAMES M. MONTGOMERY CONSULTING ENGINEERS INC.

PARTIALLY SCANNED OVERSIZE ITEM(S)

See document # 2141267
for partially scanned image(s).
COMPOSITE PLOT PLAN

For complete hardcopy version of the oversize document contact the Region IX Superfund Records Center at (415) 536-2000

bc: T. L. Keelen
G. A. Shahan
R. F. Webber

N. K. Grover
J. D. Underwood
J. T. Harlan

Copy For

Engr. File 602-1E
Engr. File 601-2E
Central Files (2)

SHELL CHEMICAL COMPANY

A DIVISION OF SHELL OIL COMPANY

P. O. BOX 211

TORRANCE, CALIFORNIA 90509

TELEPHONE 323-3030
321-2340

SYNTHETIC RUBBER DIVISION
TORRANCE PLANT

December 7, 1966

RE: Radioactive Material
License No. 0559-70

Licensing Division
Bureau of Radiological Health
State Department of Public Health
1625 Shattuck Avenue
Berkeley 4, California

Gentlemen:

We are submitting for your approval amendments to our radioactive material license to cover the following items: A) Deletion of an Ohmart 500 millicurie Cesium-137 sealed source (U.S. Radium Corp. Model LAB-236C1-5A). This source is described under Items 6B, 7B, 8B, and 9B of our License No. 0559-70. We are returning the source to Ohmart Coporation for their disposal. The Time Freight, Inc., Montebello, California will transport the source to the Ohmart factory in Cincinnati, Ohio during or shortly after the week of December 19, 1966. B) Change the name of the certifying official for the Shell Chemical - Torrance Plant. The plant manager, Mr. G. S. Williamson, has been transferred, and his name should be deleted from our license. The name of Mr. O. M. Williams, who has assumed the duties as Plant Manager, is to be added to our license.

Additionally, we wish to advise you that during the week of December 12, 1966, the compensating cell for one of the Ohmart Units listed under Items 6D, 7D, 8D, and 9D of our license is also being shipped by Time Freight to Ohmart for repair and will be returned to us sometime in February, 1967.

Both shipments will be under the supervision of an Ohmart representative.

In event, you wish any further information, please contact us.

Very truly yours,

ORIGINAL SIGNED BY O. M. WILLIAMS

O. M. Williams
Plant Manager

WCT:vmv

cc: Los Angeles County Health Department

TORRANCE
SD-0015076

SHELL CHEMICAL COMPANY
A DIVISION OF SHELL OIL COMPANY
P.O. BOX 211
TORRANCE, CALIFORNIA 90509

TELEPHONE 323-3030
321-2340

SYNTHETIC RUBBER DIVISION
TORRANCE PLANT

February 16, 1967

Re: Radioactive Material
License No. 0559-70

Licensing Division
Bureau of Radiological Health
State Department of Public Health
1625 Shattuck Avenue
Berkeley 4, California

Gentlemen:

On December 7, 1966 we wrote to you stating that we are returning a 500 millicurie Cesium-137 source (U.S. Radium Corp. Model Lab 236C1-5A) to Ohmart Corporation for disposal. The source is described under items 6B, 7B, 8B and 9B of our License No. 0559-70. Time Freight, Inc. was scheduled to transport the source to the Ohmart factor in Cincinnati, Ohio during or shortly after the week of December 19, 1966. Because of a delay in receiving the container from Ohmart and in preparing the source for shipment, we were unable to ship as stated.

We can now advise you that this source was shipped via Time Freight February 14, 1967.

If more information is required, please contact us.

Very truly yours,

ORIGINAL SIGNED BY O. M. WILLIAMS

O. M. Williams
Plant Manager

cc: Los Angeles County Health Department
Attention Mr. Jack Rogers

bc: T. L. Keelen
G. A. Shahan
R. F. Webber
N. K. Grover
J. D. Underwood
J. T. Harlan
Engr. File 602-1E
Engr. File 607-2E
Central Files (2)

TORRANCE
SO-0015075

CITY OF LOS ANGELES, DEPARTMENT OF PUBLIC WORKS

Sanitation / Sewer Maint. 7-22-69

№ 22969

Received of Shell Oil Co the sum of Forty-four Dollars — 44 —

(Address 19821 S. Hamilton Ave.) Fees on I.W. { Permit Office } No. W-34146 B. C. No.

General Fund

DEPARTMENT OF PUBLIC WORKS
City of Los Angeles

By E. Collingson

16-356

TORRANCE
SO-0013752

CITY OF LOS ANGELES
DEPARTMENT OF PUBLIC WORKS
BUREAU OF SANITATION
INDUSTRIAL WASTE CONTROL SECTION

PHONE
624-5211
Ext. 1253

APPLICATION FOR INDUSTRIAL WASTE PERMIT

See Reverse Side for Fee Schedule
(Submit in Duplicate)

W 34146
W-Number

1. Firm Name: Shell Chemical Company, A Division of Shell Oil Company
2. Type of Business: Synthetic Rubber Plant — 321-2340 (PHONE)
3. Installation Address: 19821 S. Hamilton Avenue (NUMBER & STREET) Los Angeles California (ZIP CODE)
4. Mailing Address: P.O. BOX 211 (NUMBER & STREET) Torrance (CITY) California (STATE) 90509 (ZIP CODE)
5. Processes Involved: Butadiene, Styrene, Synthetic Rubber
6. Chemical and physical characteristics of waste discharge: Final combined treated and neutralized effluent.
7. Name of Applicant or Representative of Firm O. M. Williams, Plant Manager (PLEASE PRINT)

   Signature: /s/ O. M. Williams Date 7/11/69

(OVER) DO NOT WRITE BELOW THIS LINE (OVER)

8. Size and location of sewer, S.D. or other: 57" L. A. County San #5 trunk sewer in P.E. r/w w/o Normandie Ave. via Private 14" press asbestos cement latex & rubber & plastic products washing.
9. Waste Processes: (53) ( ) ( ) ( ) ( ) clarification, neutralization chemical precipitation various pri. & sec skimmers
10. Required Treatment: (02) (03) (04) API Sep EFF surge tank auto sampler, pH recorder drop
11. Required Treatment Facility: (19) ( ) ( ) m/h special purpose anaolog computer
12. Additional Information: tailor discharge rates to L. A. County San #5 sewer availability as follows" 10:00 a.m. - 10:00 p.m., 600 gpm; 10:00 p.m. - 10:00 a.m., 2700gpm

TORRANCE
SO-0013750

13. Submitted by Inspector: Norman A. Cotter /s/ Date: 8-8-69
14. Recommended by Senior Inspector: J. C. Engerrer Date: 8-8-69
15. Approved by Principal Inspector: Charles A Thurston Date: 8-26-69

16. APPLICANT: A permit is issued subject to conditions shown hereon and is revocable at any time for non-compliance with the regulating provisions of the Los Angeles Municipal Code or any policy of the Board of Public Works adopted pursuant thereto.

(OVER)

DO NOT WRITE IN THIS SPACE

New	x
Revision	
Change of Ownership	
Sewer	x
S.D.	
Watercourse	
Other	
G. G.	
Seats:	
Grease Trap	
Max. gpm	2700
Total gpd	2,376,000
Sec. 64.30	x
Sec. 64.31	
Class	5
District	5

MAKE CHECK PAYABLE TO:

DEPARTMENT OF PUBLIC WORKS
CITY OF LOS ANGELES

MAIL TO:

INDUSTRIAL WASTE CONTROL SECTION
SEWER MAINTENANCE DIVISION
2335 DORRIS PLACE
LOS ANGELES, CALIFORNIA 90031

I. Section 64.30 — INDUSTRIAL WASTE DISPOSAL — Sewers and/or Storm Drains

1. Application Fee: $44.00 — Note: Submit this fee with application.

2.* Annual Fee:

Class 1	$16.50
Class 2	33.00
Class 3	49.50
Class 4	66.00
Class 5	82.50

*This fee will be billed to the permittee later and in accordance with the dates shown below.

Date of Issuance of Permit	Due Date of Annual Fee
Jan. 1 to March 31, incl.	April 1
Apr. 1 to June 30, incl.	July 1
July 1 to Sept. 30, incl.	Oct. 1
Oct. 1 to Dec. 31, incl.	Jan. 1

II. Section 64.31 — INDUSTRIAL WASTE DISPOSAL INTO WATERCOURSES

1. Application and Fee: The appropriate fee determined from the schedule below must be submitted with this application. The permittee will be billed annually thereafter in accordance with dates set forth above in regard to Section 64.30.

5,000 gals., per day, or less	Class 6	$ 44.00
5,001 - 50,000 gals., per day	Class 7	99.00
50,001 - 500,000 gals., per day	Class 8	198.00
500,001 gals., per day or greater	Class 9	401.50

FURTHER INFORMATION is available at the following District Offices:

Administration: 2335 Dorris Place; PHONE 624-5211, Ext. 1253

North Central Area: 2335 Dorris Place; PHONE 221-3095

Hollywood Area: 6014 Waring Avenue; PHONE 463-4667

Southern Area: 2002 W. Slauson Avenue; PHONE 291-1321

Harbor Area: Rm. 603, San Pedro City Hall; PHONE 831-9211, Ext. 451

San Fernando Valley Area: 14401 Erwin St., Rm. 7; PHONE 782-6125, Ext. 494

West Los Angeles Area: 7166 W. Manchester Ave., Rm. 2; PHONE 670-5016

NOTE: Except for the Administration Office, all District offices are open **from 7:30 a.m. to Noon only.**

TORRANCE
SO-0013751

THIS PERMIT MUST BE DISPLAYED AT PLACE OF BUSINESS

W- 34146 8/69 5 $ 82.50 ← This fee is payable Oct. 1st Each Year

PERMIT NO. ISSUED CLASS ANNUAL FEE

31119

INDUSTRIAL WASTE PERMIT

CITY OF LOS ANGELES

DEPARTMENT OF PUBLIC WORKS

ISSUED TO:

Shell Chemical Company
19821 S. Hamilton Avenue
Los Angeles, California

TORRANCE
SO-0013748

RECOMMENDED BY: James L. Carey
SUPERINTENDENT, SEWER MAINTENANCE

BOARD OF PUBLIC WORKS
BY: Norman B. Hume
DIRECTOR, BUREAU OF SANITATION

THIS PERMIT BECOMES VOID UPON ANY CHANGE OF OWNERSHIP OR LOCATION WHATSOEVER

NOTIFY THE BUREAU OF SANITATION OF ANY CHANGES IN OWNERSHIP OR ADDRESS [redacted] SEE REVERSE SIDE

This permit signifies that the person named on the face hereof has fulfilled the requirements of Section 64.30 L.A.M.C., in making application to the Board of Public Works to discharge Industrial Wastes into the sewerage system; and that said application has been approved to discharge specific industrial wastes into the sewerage system in the manner in which was described therein.

This permit does not in any way authorize the permittee to violate any term or provision of the Municipal Code governing industrial waste disposal or any regulation of the Board of Public Works made pursuant thereto.

The Bureau of Sanitation reserves the right to refuse to re-issue any permit which has been revoked, lost, mutilated, or defaced.

TORRANCE
SO-0013749

LOS ANGELES, CALIFORNIA 90031
Phone MA. 4-5211, Ext. 1253

IBM L14403-0

SR 1869-1 (5 52) Printed in U.S.A.

Department of Public Works

Permit No	Period Covering	Amount	Date Passed for Pymt	Account	
W 16725	10/01/69 – 10/31/70	49.50	10/09/69	24701.33	
W 16933	10/01/69 – 10/31/70	49.50	10/09/69	24701.33	
W 34146	10/01/69 – 10/31/70	82.50	10/09/69	24701.33	
W 34146	10/01/70 10/31/71	82.50	10/2/70	~~7159.00~~ ~~24701.83~~	24701.33

TORRANCE
SO-0013753

M70208
Box 273

SHELL CHEMICAL COMPANY

A DIVISION OF SHELL OIL COMPANY

TORRANCE
SS-0004821

M70208
Box 223

SPILL CONTINGENCY PLAN

POLYMERS DIVISION
TORRANCE PLANT

TORRANCE
SS-0004822

TABLE OF CONTENTS

	Page
Purpose	1
Introduction	1
Responsibilities	1
Types of Potential Spills	3
Containment and Cleanup of Spills in the Plant	3
Containment and Cleanup of Spills into the Dominguez Channel	5
Spills from Vehicles, Off-Site	7
Spills from Shell Pipe Lines, Off-Site	7
Spills at Westoil Terminal	7
Notification Procedure	8
Check List	11
Appendices	
Major Chemical Storage	Appendix A
Plot Plan of Process Effluent System	Appendix B
Plot Plan of Storm Drain Effluent System	Appendix C
Flow Rates of Effluent Streams	Appendix D
Effluent Specifications	Appendix E
Flowsheet of Process Effluent Treatment Facilities	Appendix F
Flowsheet of Storm Drain Effluent Treatment Facilities	Appendix G
Availability of Emergency Equipment	Appendix H
Spill Report Form	Appendix I
Chain of Communication for Reporting Spills	Appendix J

TORRANCE
SS-0004823

GENERAL

TORRANCE
SS-0004824

SPILL CONTINGENCY PLAN

PURPOSE

It is our objective to prevent any spill, no matter how small, from entering the Dominguez Channel or otherwise harming the environment. Therefore, we must be prepared to react promptly and effectively in the event of an accidental spill. This will include shutting units down if necessary to prevent a spill from entering the Dominguez Channel. With alert action, most spills should be contained within the Plant, with minimal effect on the community and environment. In the event a spill escapes Plant cleanup facilities, every effort will be made to minimize its effect on the community through prompt containment and expedient cleanup.

This plan describes the actions to be taken to control, report and clean up spills of Torrance Plant chemicals, hydrocarbons, latex or oil within or outside the Plant boundaries. The available emergency equipment for controlling spills is described, and the telephone numbers of local contractors are given. Spills which escape the Plant will require notification of certain Shell personnel as well as outside regulatory agencies. These notification procedures, including names and telephone numbers of key personnel and agencies, are described.

INTRODUCTION

The layout of the Torrance Plant is such that most spills will enter either the process effluent system or the storm drain system. Effluent facilities in each unit provide means for containment, provided quick action is taken. The tri-plant effluent facilities in the Butadiene Unit provide the final means for containment and treatment of spills within the Plant.

Though remote, the possibility exists of a spill entering the Dominguez Channel, either by penetrating our final effluent facilities or via storm drains in streets adjacent to the Plant. In this event, we are required, by law, to (1) report immediately to Federal authorities and (2) take the necessary steps to remove or neutralize the effects of the spill.

RESPONSIBILITIES

Anyone seeing or hearing of a spill involving the Torrance Plant shall take any emergency action possible and will then notify the supervisor in charge of the affected area. The supervisor will be responsible for reporting the spill to the Department Manager during regular working hours. At all other times he will contact the SBR Finishing Shift Foreman.

The SBR Finishing Shift Foreman will be responsible for:

1. Taking whatever initial steps are indicated to limit the effect of the spill.

2. Notifying the Los Angeles Fire Department, according to Section 2 of the Plant Emergency Manual, if a fire hazard exists.

3. Notifying the Operating Duty Manager.

The Operating Duty Manager will have overall responsibility for executing all aspects of this Plan, including seeing that the proper notifications are carried out as described in the section "Notification Procedure".

IN-PLANT SPILLS

TORRANCE
SS-0004827

TYPES OF POTENTIAL SPILLS

The variety of chemicals used at the Torrance Plant can be classified into five basic types for purposes of describing spill containment and cleanup procedures. These classifications are:

Type I - Volatile, water insoluble organic compounds.

Type II - Nonvolatile, water insoluble organic compounds with a gravity less than 0.95.

Type III - Nonvolatile, water insoluble organic compounds with a gravity greater than 0.95.

Type IV - Water soluble chemicals, other than strong acids and bases.

Type V - Strong, water soluble acids and bases.

Chemicals stored in large quantities at the Torrance Plant are listed according to classification in Appendix A.

CONTAINMENT AND CLEANUP OF SPILLS IN THE PLANT

The immediate response to any spill into the Plant process effluent system or storm drain system is to cut off the supply and isolate the spill. The Effluent Operator (Ext. 485) should always be notified immediately so that he may take additional steps for isolation of the spill in his area. Plot plans (Appendices B and C) show the location of points where the process effluent system and the storm drain system may be blocked off for purposes of isolating a spill. Flow rates of the major streams in each unit which contribute to the process and storm drain systems are listed in Appendix D. This table may be referred to if curtailment of flow rates is necessary for spill containment or if it is necessary to shut down some units to prevent a spill from entering the Dominguez Channel.

Appendices F and G contain simplified flow sheets of the final treatment facilities for the process effluent and for the storm drain effluent.

A. Process Effluent System

Small spills of Type I, II, and III materials into the process effluent system can be trapped in the unit basins. Type I materials should be allowed to weather-off. Type II materials can be either skimmed or picked up by vacuum truck. Type III materials must be picked up by vacuum truck.

A large spill of any of the five material types is cause for curtailing unit water flow rates to keep the material from being spread over the entire effluent system. Trapping and cleanup are similar to that for small spills. Where a fire hazard exists, the Immediate Action called for in Section 2 of the Plant Emergency Manual will be taken by the SBR Finishing Shift Foreman.

Materials which escape containment in the unit may be contained at the effluent facilities. Type I material should be allowed to weather-off. Type II materials can be picked up by vacuum truck and skimmed at the basin outfall. Type III materials and excessive amounts of Type IV and V materials should be isolated in T-581. Water flows into the process effluent system should be curtailed immediately and the discharge from T-581 shut off. After the material is isolated, water from the final separator basins can bypass T-581 temporarily and go directly to the Normadie trunk of the sanitary sewer. The method of disposing of the water in T-581 must be determined on a case by case basis. Some possibilities are: neutralization in T-581, hauling away by vacuum truck, or bleeding slowly to the sanitary sewer. This latter course should be taken after prior arrangement with the Industrial Wastes Division of the Los Angeles County Sanitation Districts (775-3178).

The specifications which the process effluent must meet are shown in Appendix E. Check samples should be sent to the Laboratory if the quality of the water being discharged to the sewer is in question.

B. Storm Drain System

The storm drain system can handle only moderate spills of Type I, II and V materials, as final treatment is limited to neutralization and air flotation. Moderate spills of these materials will be neutralized in the neutralizer tank T-567 or skimmed off at the air flotation unit (A-575) into the Butadiene Unit slop oil basin. Immediate notification of the Effluent Operator will help insure the cleanup is carried out satisfactorily. Check samples should be sent to the Laboratory to insure that water quality standards are being maintained during cleanup operations. These standards are shown in Appendix E.

Spills of Type III and IV materials cannot be treated in the storm drain system. Nor can major spills of Type I, II and V be adequately handled by the system. Spills of this nature should be contained within the units with cleanup procedures being the same as described for spills into the process effluent system.

If a spill of Type III or IV materials enters the treatment facilities at the Effluent Area, the water discharged to the Dominguez Channel can go off-specification due to appearance, oxygen demand, odor, or toxicity if prompt action is not taken. It is imperative that the contaminated waters be diverted to the process basin to avoid polluting the Channel. This may be accomplished by opening the drain on the air flotation unit. Once the material is diverted to the main basin, it

may be discharged to the sanitary sewer, if permissible, or isolated in T-581, with cleanup procedures being the same as outlined for spills into the process effluent system. While contaminated waters are diverted to the process effluent system, storm drain flow rates in all units should be curtailed to avoid overloading the air flotation unit and the process effluent system.

The procedure for handling excessive quantities of Type I, II and V materials at the Effluent Area is the same as outlined for Type III and IV materials.

If appreciable material remains trapped in the storm drain systems after containment of the major portion of the spill, the judicious use of small quantities of water to move the material where it can be better dissipated or removed is indicated.

CONTAINMENT AND CLEANUP OF SPILLS INTO THE DOMINGUEZ CHANNEL

In the event a spill into the Channel can be controlled by booms and vacuum trucks, contact the Dispatcher at William H. Hutchison and Sons Service Company, Inc. (830-1720), to provide equipment and manpower for the necessary cleanup. The Dispatcher is on duty 24 hours per day, 7 days a week. This concern can provide vacuum trucks, booms, floats, skimming equipment, etc., from their own yard as well as from other contractors (see attached equipment inventory, Appendix H). Their personnel are well versed in the techniques employed in dealing with spills of hydrocarbons or other immiscible liquids into bodies of water.

The Watson Refinery of the Atlantic-Richfield Company is located on the Dominguez Channel about three miles below our outfall. Atlantic-Richfield have a boom which they will extend across the Channel. Arrangements have been made for them to extend the boom at our request. Their Refinery Supervisor can be reached at 775-3587.

Because the Dominguez Channel is tidal, knowledge of the flow conditions in the Channel at any time requires reference to tide tables, a copy of which is kept at the SBR Finishing Shift Foreman's office. Because of the tides and the fact that the effects of few of our products would be visible in the Channel at night, considerable survey work may be required to define the boundaries of the spill. For this reason, where water-insoluble liquids are involved it is wise to immediately request extension of the boom at Atlantic-Richfield.

We have a padlock on the gate of the South Dominguez Channel patrol road east of Main Street. The key is kept at the Butadiene guard desk. If emergency access to other gates is required, bolt cutters should be employed.

Following a survey of conditions on the Channel, and the arrival of the manpower and equipment, orderly cleanup of the spill can progress along the following guidelines.

1. Type I Materials

   a. C_4 Hydrocarbons - Containment is not desirable. Rapid evaporation and dispersal is desirable. Local civil defense authorities should be alerted if the quantity of gas constitutes a hazard to residential areas.

   b. C_5 Hydrocarbons - These products may be contained by spill booms until evaporated. The most effective abatement and elimination is by natural evaporation and dissipation of the product. Attempts to retrieve the spill may produce explosive mixtures in vacuum equipment. A blanket of foam reduces the immediate fire hazard, but impedes the natural dissipation of the product.

2. Type II and Type III Materials - These are usually contained by spill booms and retrieved with vacuum equipment. Dispersants are not to be used. Type III materials will probably fractionate, the lighter components floating to the surface. The surface oils should be contained and picked up with vacuum trucks.

3. Type IV and V Materials - Containment is usually impossible. Neutralization may be considered, particularly if dissipation is not rapid and the boundaries of the spill well defined.

4. Due to the rapid tidal movement of the Dominguez Channel, prolonged containment by spill boom may prove difficult. There are, however, several hours of residence time between the Plant and the Harbor during dry weather conditions. During rainfall, any materials escaping the Plant into the Dominguez Channel will very likely enter the Los Angeles Harbor.

OFF-SITE SPILLS

TORRANCE
SS-0004832

SPILLS FROM VEHICLES, OFF-SITE

These are the responsibility of the carrier, and Shell's participation is limited to technical advice covering the hazardous properties of the material spilled. Refer to the Shell STERP manual.

SPILLS FROM SHELL PIPE LINES, OFF-SITE

Shell West Coast Pipe Lines has a Spill Contingency Plan which covers the Torrance Plant off-site pipelines.

In the event any Shell off-site pipelines are involved, the following Shell Pipe Line personnel shall be contacted in their order of listing until one is reached.

		OFFICE	RESIDENCE
J. D. Hall	Pipe Line Supervisor	427-4113	714 539-4450
L. C. McCabe	Pipe Line Foreman	427-2314	421-9534
R. L. Dickson	Pipe Line Foreman	427-2314	865-5554
G. L. Moynier	Field Engineer	427-2969	434-9153
R. E. Carlson	Line Superintendent	427-2969	714 897-8349

SPILLS AT WESTOIL TERMINAL

Westoil have their own Contingency Plan. They may be reached at 830-4650.

NOTIFICATION PROCEDURE

TORRANCE
SS-0004834

NOTIFICATION PROCEDURE

A. Plant Personnel

In the case of (1) a large spill in the plant, (2) any spill which enters the Dominguez Channel, or (3) any spill which is reported to an outside agency, the following people will be notified by the Operating Duty Manager:

NAME		TELEPHONE NO.
E. S. Martin	Plant Manager	832-1526
Alternate:		
R. D. Lundahl	Superintendent Technical	598-2727
A. H. Anderegg	Manager - Environmental Conservation	547-1344
Alternate:		
L. R. Donkle	Staff Engineer - Environmental Conservation	427-6735
J. P. Ruby	Manager Employee Relations	377-1953

B. Regulatory Agencies

A number of public agencies are responsible for, or interested in, water conditions in the Dominguez Channel. Depending on the circumstances, it may be necessary or advisable to inform some or all of these agencies in the event of a spill affecting Channel waters. We are legally* required to report to the U. S. Coast Guard any spill which may harm the Channel or be of concern to the community. The Manager of Environmental Conservation should be consulted as to which other agencies should be called. A spill report must be filled out whenever an outside agency is contacted. A sample report form is shown in Appendix I.

1. Primary Notification of Regulatory Agencies

a. The SBR Finishing Shift Foreman will notify the Air Pollution Control District (629-4711) whenever a spill causes an odor problem.

b. If a spill enters the Channel, the Operating Duty Manager will see that the U. S. Coast Guard is notified. The Regional Water Quality Control Board will also be notified.

* Federal Water Quality Act of 1970

AGENCY	TELEPHONE NO.
Regional Water Quality Control Board	620-4460
Night (Richard Harris)	798-2231
U. S. Coast Guard (Captain of the Port of Long Beach)	590-2321

2. Secondary Notification of Regulatory Agencies

It may also be advisable to notify other agencies shown below. The decision to notify these agencies will be based on specific conditions and after consultation between the Operating Duty Manager and the Plant Manager

AGENCY	TELEPHONE NO.
a. Los Angeles County Engineer - Industrial Waste Division	775-3178
b. Federal Water Quality Administration (Southwest Region)	415-556-4305
c. California Department of Fish and Game	832-7224
d. Los Angeles County Flood Control Agency	629-2451

C. Other Shell Organizations

1. Primary Notification

If a spill might result in adverse publicity, the Operating Duty Manager should notify the Los Angeles Area Public Relations Manager. The chain of communications for reporting spills of hazardous substances within the Shell Oil organization is shown on the flow chart in Appendix J.

NAME	TELEPHONE NO.
C. E. Totten - Public Relations Manager - Los Angeles Areas	482-3131
Residence	652-8698

2. Secondary Notification.

The Manager Environmental Conservation will notify the following personnel of any spills into the Channel. Notification will be made during normal work hours.

NAME	TELEPHONE NO.
B. G. Warren, Attorney - Los Angeles Area	482-3131
Travelers Insurance Representative	482-3131
R. L. Maycock - Manager Environmental Engineering - Houston	713-666-6311
A. H. Hall - Loss Prevention - Houston	713-220-6558
L. P. Haxby - Environmental Conservation - New York	212-262-7448

SPILL ACTION CHECK LIST

TORRANCE
SS-0004838

SPILL ACTION CHECK LIST*

Shown below is a check list which abstracts actions and notifications made by key personnel in the event of a serious spill. The Page Reference heading refers to the page in the text where the action or notification is described.

	ACTION		PAGE REFERENCE
Person who discovers spill	Take immediate action to limit spill.		1
	Call Supervisor or SBR Finishing S.F.		1
SBR Finishing Shift Foreman (S.F.)	Take charge to limit or solve spill.		2
	Fire danger? Call LAFD	384-3131	2
	Notify Effluent Operator	485	3
	Call Duty Manager		2
	Odors? Call APCD	629-4711	8
Effluent Operator	Take appropriate action		3
Operating Duty Manager	Take charge		2
	Notify Plt. Mgr.	832-1526	8
	Notify Mgr. E. C.	547-1344	8
	Notify Mgr. E. R.	377-1953	8
	Contact Hutchison?	830-1720	5
	Contact Atlantic Richfield?	775-3587	5
	Contact S.P.L.?	714-539-4450	7
	Channel spill? Call U.S.C.G.	590-2321	8,9
	With Mgr E.C.		
	Regional Water Qual. Cont. Bd.	620-4460	9
		(798-2231)	9
	With Plt Mgr, notify		
	L. A. County Engr.	775-3178	9
	F.W.Q.A.	415-556-4305	9
	Cal. Dept. Fish-Game	832-7224	9
	L. A. County Flood Control	629-2451	9
	Shell LA Area Public Relations	482-3131	9
		(652-8698)	
Manager Environmental Conservation (E.C.)	Notify B. G. Warren	482-3131	10
	Notify Travelers Insurance	482-3131	10
	Notify R. L. Maycock	713-666-6311	10
	Notify A. H. Hall	713-220-6558	10
	Notify L. P. Haxby	212-262-7448	10

* Other than normal duty hours.

TORRANCE
SS-0004839

APPENDIX A

TORRANCE
SS-0004840

APPENDIX A

MAJOR CHEMICAL STORAGE

BUTADIENE UNIT

TYPE I - C_4 Hydrocarbon
C_5 Hydrocarbon

TYPE II - Absorber Oil
Ethylbenzene Residue
Fuel Oil
"Slop" Oil
TOLU-SOL

TYPE III - None

TYPE IV - Acetic Acid
Acetonitrile
C-104 Bottoms (Hydrocarbon-water emulsion)
Copper Ammonia Acetate Solution ("Blue Solution")

TYPE V - Caustic (NaOH)
Sulfuric Acid
Ammonia

STYRENE UNIT

TYPE I - C_4 Hydrocarbon

TYPE II - Benzene
Catalyst Complex
Ethylbenzene
Ethylbenzene Residue
Fuel Oil
Polyethylbenzene
Slop Oil
Styrene

TYPE III - Sulfur Tar Oil
Oils from the propane crackers

TYPE IV - None

TYPE V - Sulfuric Acid
Caustic

MAJOR CHEMICAL STORAGE (CONTD)

POLYMER UNIT

TYPE I - Butadiene
Isoprene
Isopentane
Catalyst - 607

TYPE II - Ajone Antioxidant
Cyclohexane
DDM Modifier
Catalyst - 118
Kaydol Oil
Oleic Acid
SHELLFLEX 371 Oil
Styrene
Sulfole Modifier
Tallow Fatty Acid

TYPE III - SHELL DUTREX 739 Oil
SHELL DUTREX 766 Oil
SHELL DUTREX 2726 Oil
Flexzone-5L Antioxidant

TYPE IV - Chelon-100
Dresinate 515 Soap
Dresinate 751 Soap
Emulsions of oil, antioxidant
Latex
Methanol
SDD Shortstop
Sodium Polysulfide Shortstop

TYPE V - Caustic (KOH and NaOH)
Sulfuric Acid

APPENDIX B

TORRANCE
SS-0004843

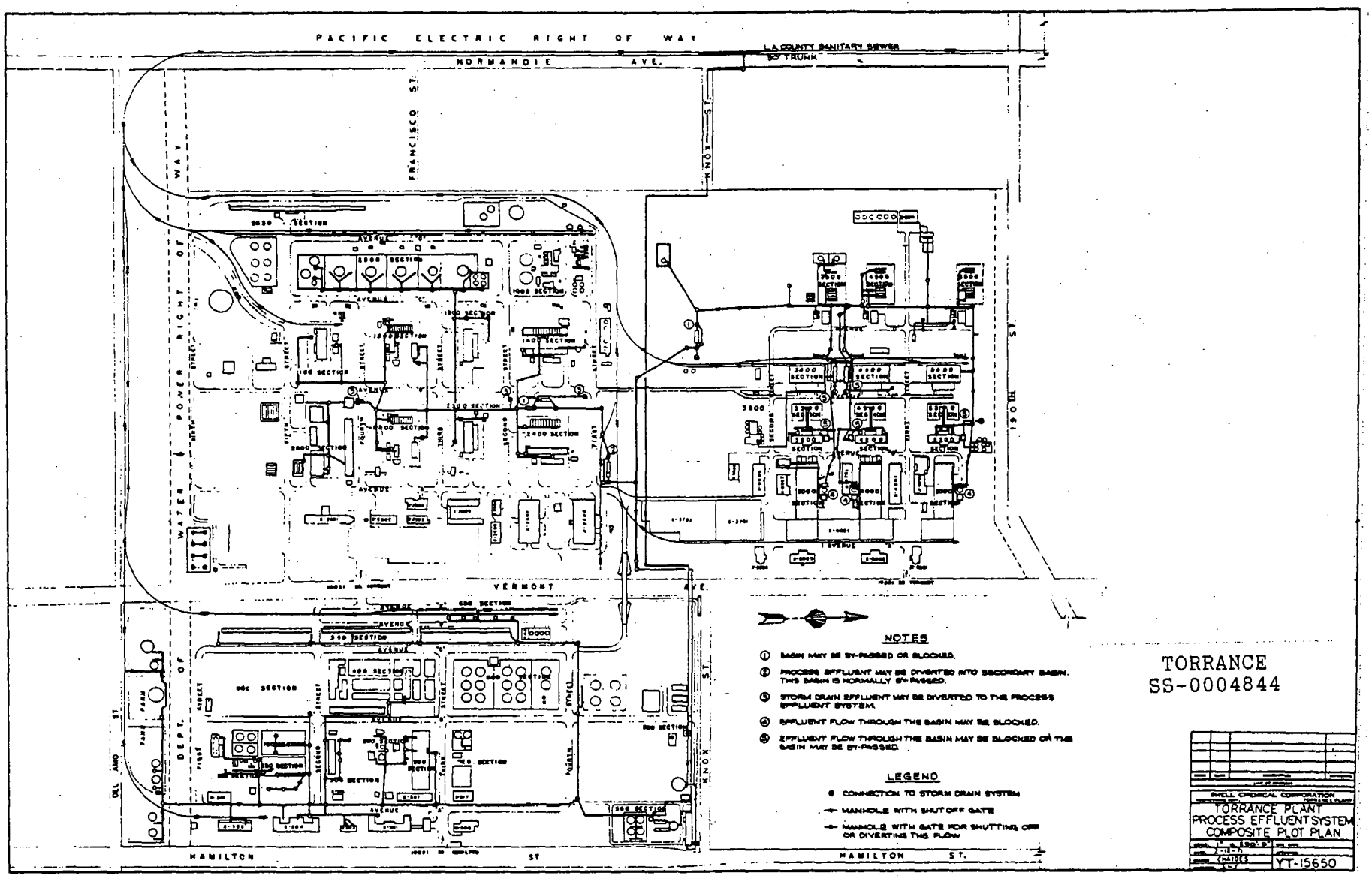
PACIFIC ELECTRIC RIGHT OF WAY
LA COUNTY SANITARY SEWER 15" TRUNK
NORMANDIE AVE.
FRANCISCO ST.
KNOX ST.
WATER & POWER RIGHT OF WAY
VERMONT AVE.
DEPT. OF
DEL AMO ST
HAMILTON ST
HAMILTON ST.
NOTES
① BASIN MAY BE BY-PASSED OR BLOCKED.
② PROCESS EFFLUENT MAY BE DIVERTED INTO SECONDARY BASIN. THIS BASIN IS NORMALLY BY-PASSED.
③ STORM DRAIN EFFLUENT MAY BE DIVERTED TO THE PROCESS EFFLUENT SYSTEM.
④ EFFLUENT FLOW THROUGH THE BASIN MAY BE BLOCKED.
⑤ EFFLUENT FLOW THROUGH THE BASIN MAY BE BLOCKED OR THE BASIN MAY BE BY-PASSED.
LEGEND
CONNECTION TO STORM DRAIN SYSTEM
MANHOLE WITH SHUT OFF GATE
MANHOLE WITH GATE FOR SHUTTING OFF OR DIVERTING THE FLOW
TORRANCE
SS-0004844
SHELL CHEMICAL CORPORATION
TORRANCE PLANT
PROCESS EFFLUENT SYSTEM
COMPOSITE PLOT PLAN
YT-15650

APPENDIX C

TORRANCE
SS-0004845

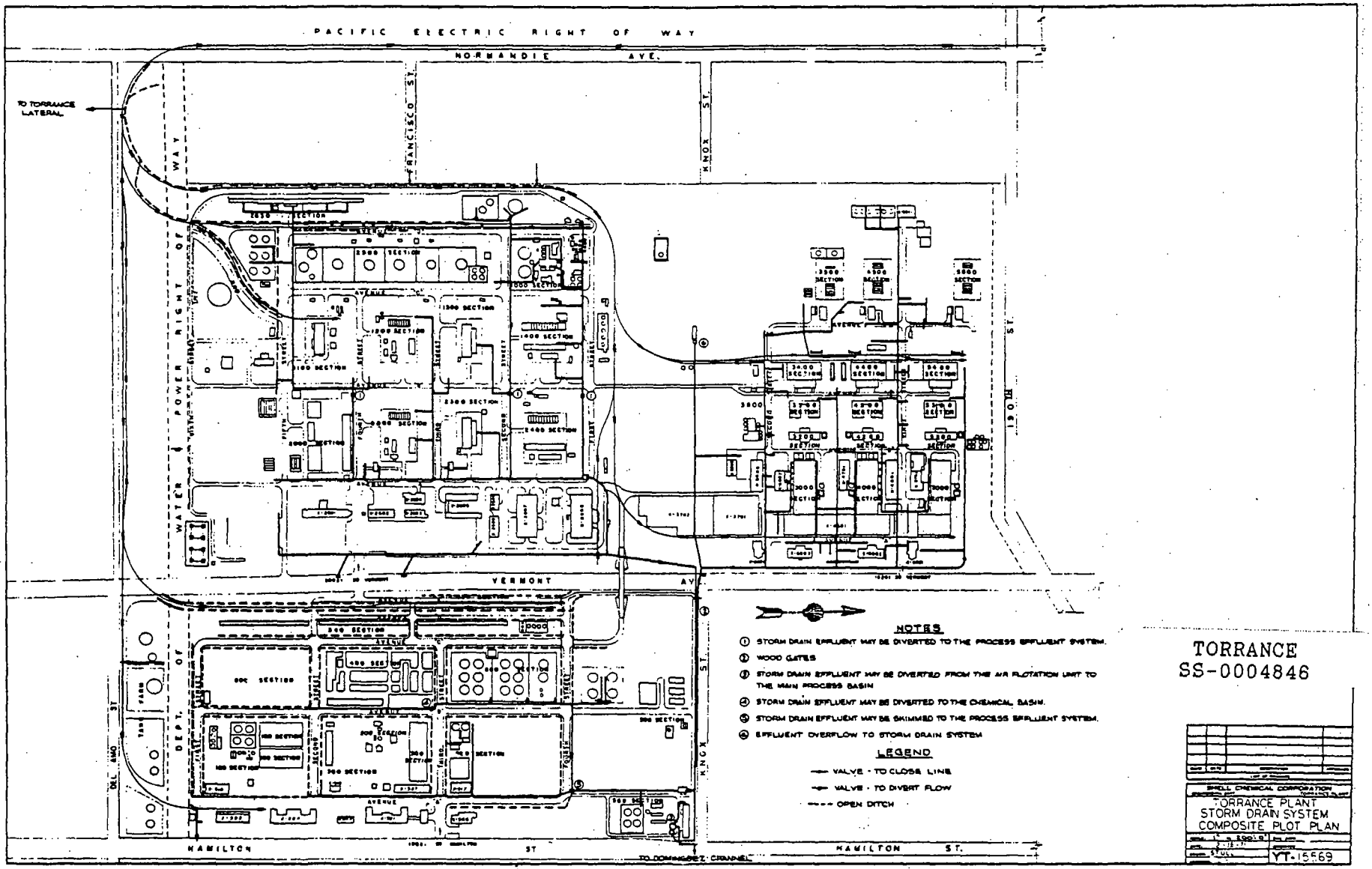
PACIFIC ELECTRIC RIGHT OF WAY
NORMANDIE AVE.
TO TORRANCE LATERAL
WATER & POWER RIGHT OF WAY
FRANCISCO ST.
KNOX ST.
VERMONT AVE.
HAMILTON ST.
TO DOMINGUEZ CHANNEL
DEPT. OF
NOTES
① STORM DRAIN EFFLUENT MAY BE DIVERTED TO THE PROCESS EFFLUENT SYSTEM.
② WOOD GATES
③ STORM DRAIN EFFLUENT MAY BE DIVERTED FROM THE AIR FLOTATION UNIT TO THE MAIN PROCESS BASIN
④ STORM DRAIN EFFLUENT MAY BE DIVERTED TO THE CHEMICAL BASIN.
⑤ STORM DRAIN EFFLUENT MAY BE SKIMMED TO THE PROCESS EFFLUENT SYSTEM.
⑥ EFFLUENT OVERFLOW TO STORM DRAIN SYSTEM
LEGEND
VALVE - TO CLOSE LINE
VALVE - TO DIVERT FLOW
OPEN DITCH
TORRANCE
SS-0004846
SHELL CHEMICAL CORPORATION
TORRANCE PLANT
STORM DRAIN SYSTEM
COMPOSITE PLOT PLAN
YT-15569

APPENDIX D

TORRANCE
SS-0004847

APPENDIX D

FLOW RATES OF EFFLUENT STREAMS

		Typical Flow Rates (GPM)
I.	Process Effluent	
	A. Polymer Unit	700
	Mother liquor ex finishing	360
	Wash water ex finishing	200
	Miscellaneous runoff	50
	Special Products	50
	B. Styrene Unit	400
	Quench system	50
	Miscellaneous runoff	100
	Washdowns and intermittent	0-500
	C. Butadiene Unit	200
	100-150 Area	50
	Miscellaneous runoff	100-400
II.	Storm Drain Effluent	
	A. Polymer Unit	150
	Brine from water softener	100
	Wash water	0-50
	Miscellaneous (including laboratories)	50
	B. Styrene Unit	250
	Boiler blowdown	100
	Cooling tower blowdown	25
	Once-through water	125
	C. Butadiene Unit	270
	Boiler blowdown	150
	Cooling tower blowdown	100
	E-120A	100
	Miscellaneous	20

APPENDIX E

TORRANCE
SS-0004849

APPENDIX E

EFFLUENT SPECIFICATIONS

I. Process Effluent to Sanitary Sewer

Flow	600 gpm 10 a.m. - 10 p.m. 2,700 gpm 10 p.m. - 10 a.m.
pH	>6.0
Oil	<25 ppm
Temperature	< 120°F

Free of strong odors (mercaptan, etc.)
Free of excessive solids (rubber, etc.)

II. Storm Drain to Dominguez Channel*

Flow	No Restriction
pH	6.5 - 11.0
Oil	< 25 ppm
Temperature	< 140°F
Settleable solids	<1.0 ml/1
Chemical Oxygen Demand (Dissolved Organics)	<845 lb/day

No visible oil or solids.
Free of odors.
Satisfactory appearance re color and turbidity.
No toxic material.

---

* Tentative from Industrial Waste Division, Los Angeles County Engineer.

APPENDIX F

TORRANCE
SS-0004851

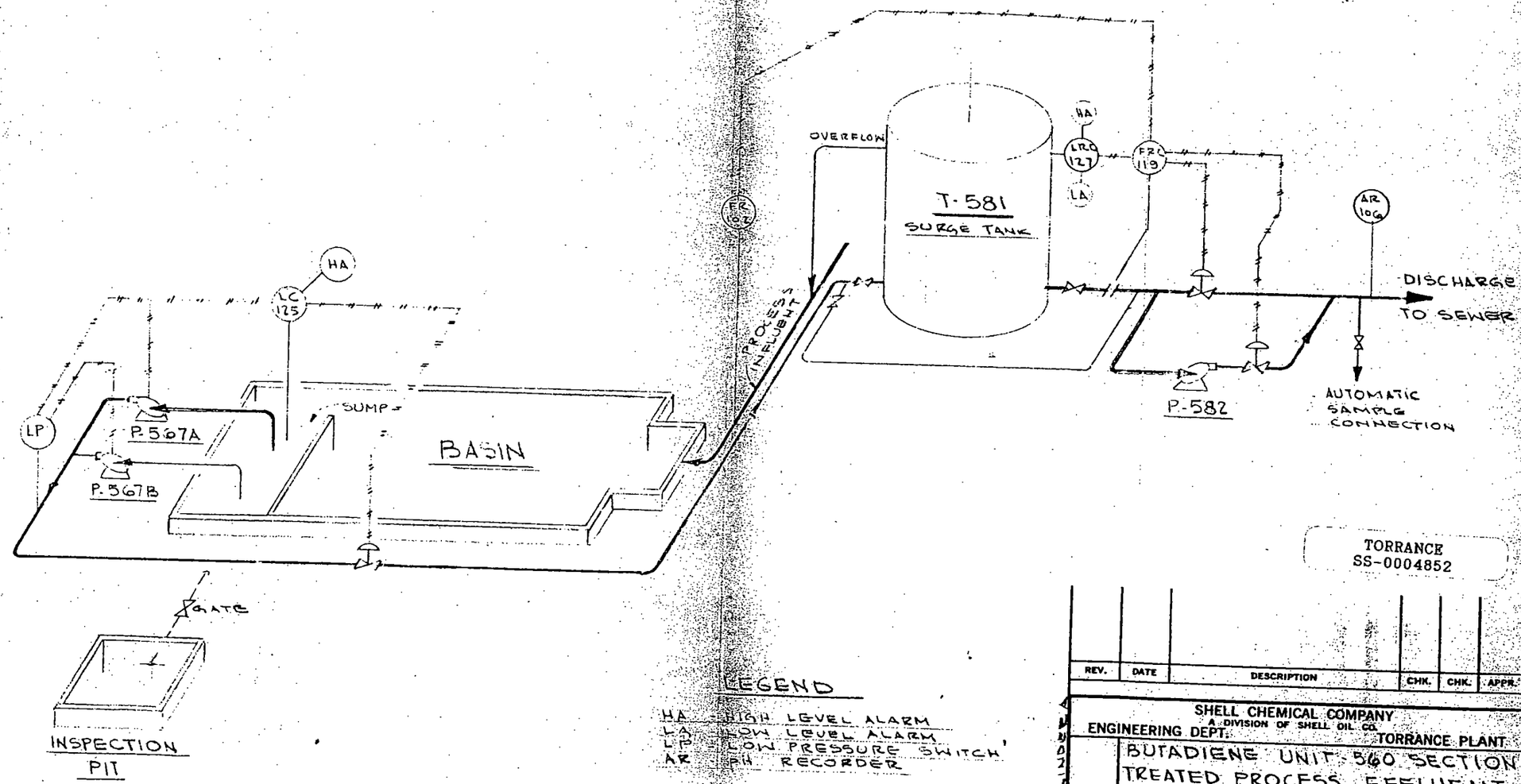

TORRANCE
SS-0004852

LEGEND

HA - HIGH LEVEL ALARM
LA - LOW LEVEL ALARM
LP - LOW PRESSURE SWITCH
AR - PH RECORDER

REV.	DATE	DESCRIPTION	CHK.	CHK.	APPR.

SHELL CHEMICAL COMPANY
A DIVISION OF SHELL OIL CO.
ENGINEERING DEPT. TORRANCE PLANT

BUTADIENE UNIT 560 SECTION
TREATED PROCESS EFFLUENT
SURGE SYSTEM
SIMPLIFIED FLOWSHEET

DATE: 2-16-71	SCALE: —	MGR. OPNS.:
DRAWN BY: HAWES		SUPT. OPNS.:
CHIEF. DRAFT.: W.I.		SUPT. TECH.
JOB ENGR.:		PLANT MGR.:
MGR. ENGR.:		VT-15568
MGR. TECH.:		

WORK ORDER:

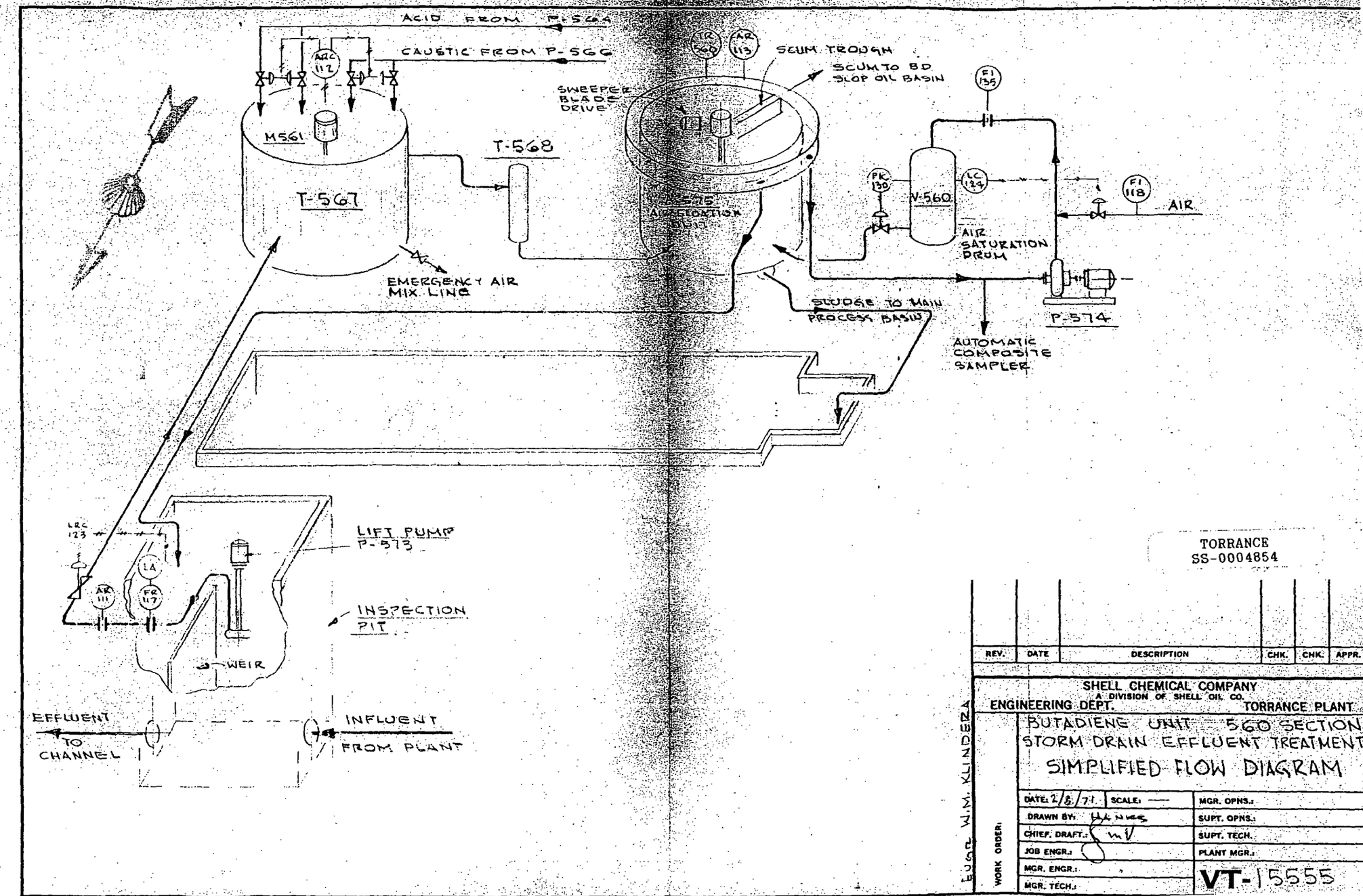

TORRANCE
SS-0004854

REV.	DATE	DESCRIPTION	CHK.	CHK.	APPR.

SHELL CHEMICAL COMPANY
A DIVISION OF SHELL OIL CO.
ENGINEERING DEPT. TORRANCE PLANT

BUTADIENE UNIT 560 SECTION
STORM DRAIN EFFLUENT TREATMENT
SIMPLIFIED FLOW DIAGRAM

DATE: 2/8/71	SCALE: —	MGR. OPNS.:
DRAWN BY:		SUPT. OPNS.:
CHIEF. DRAFT.:		SUPT. TECH.
JOB ENGR.:		PLANT MGR.:
MGR. ENGR.:		
MGR. TECH.:		

WORK ORDER:

VT-15555

EUGE M.M. KLINDERA

APPENDIX H

TORRANCE
SS-0004855

APPENDIX H

AVAILABILITY OF EMERGENCY EQUIPMENT

I. Torrance Plant

Vacuum Truck - 40 bbl capacity kept at Polymer Shop.

Pumps - The following pumps are stored at the Polymer Weld Shop.

(1) 12 "Whirley" air driven pumps.
(2) 2 air driven diaphragm pumps.
(3) 1 gas driven pump.

Sandbags - 100 sandbags are stored at the Polymer Weld Shop.

Straw - Bales of straw are stored at the individual effluent facilities in each unit.

II. Spill Handling Contractors

Chancellor and Ogden Phone: 427-7994
Equipment: Vacuum trucks.

Wm. H. Hutchison and Sons, Inc. 830-1720
Equipment: Booms, skiffs, work boats, punts, oil removal machines, skimmers, pumps, water spray curtain, and vacuum trucks.

APPENDIX I

TORRANCE
SS-0004857

SPILL REPORT

Regulatory Agency Contacted _____

Telephone Number _____

Name of Caller _____ Date and Time _____

Call Received by _____

Nature of Spill _____

_____

Location of Spill _____

Estimated Quantity of Spill _____

Remedial Action Underway and Contemplated _____

_____

Any Specific Request by Agency? _____

_____

Other Comments _____

_____

_____

_____
Signed

Original to Plant Manager

TORRANCE
SS-0004858

APPENDIX J

TORRANCE
SS-0004859

PROCEDURE FOR INITIAL REPORTING OF OIL AND HAZARDOUS SUBSTANCES SPILLS

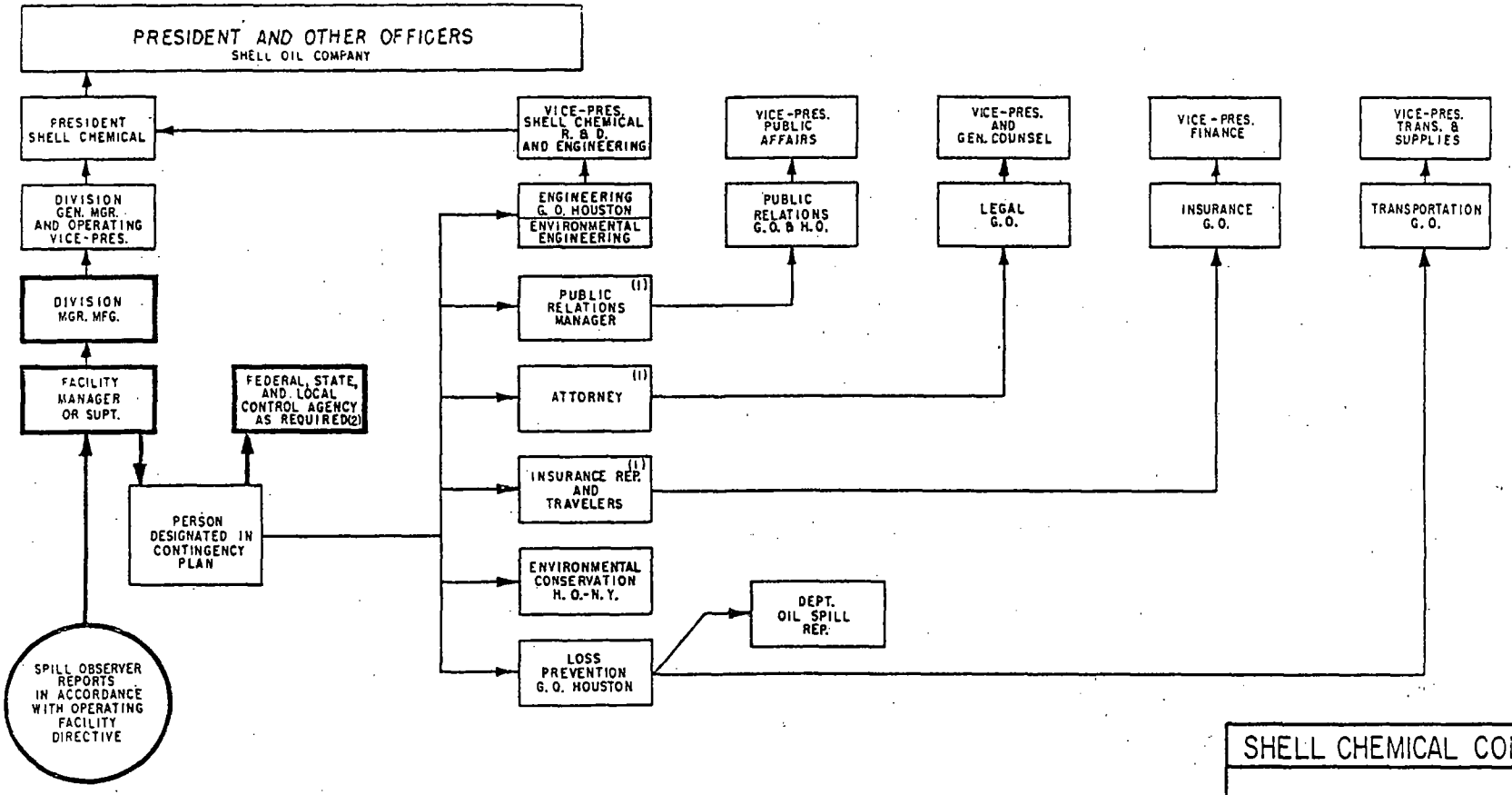

(1) FUNCTION REPRESENTATIVE DESIGNATED FOR LOCATION.

(2) FEDERAL AGENCY DEFINITION STILL PENDING. WILL PROBABLY INVOLVE COAST GUARD, FWQA, AND CORPS OF ENGINEERS.

SHELL CHEMICAL COMPANY

TENTATIVE SHELL CHEMICAL PROCEDURE FOR REPORTING OIL AND HAZARDOUS SUBSTANCES SPILLS

AUG 1970

TORRANCE
SS-0004860

SHELL DEVELOPMENT COMPANY
A DIVISION OF SHELL OIL COMPANY
P. O. BOX 211
TORRANCE, CALIFORNIA 90509

ELASTOMERS
TECHNICAL CENTER

TELEPHONE 323-3
321-2

24-9-3

January 5, 1972

California Regional Water Quality Control Board
Los Angeles Region
107 South Broadway, Suite 9026
Los Angeles, California 90012

Attention Mr. Raymond M. Hertel, Executive Officer

Gentlemen:

We enclose for Shell Chemical Company the Final Report on the Thermal Effect Studies of the Dominguez Channel Receiving Waters prepared by Truesdail Laboratories, Inc.

As you are aware, The Torrance Plant of Shell Chemical is now totally shut down and no industrial water discharge has been made to the Dominguez Channel since the first quarter 1972.

Very truly yours,

A. H. Anderegg
Manager, Services

Enclosure

AHA:eb
bc: (w/enclosure)
Head Office - Environmental Engineering Manager
bcc: (w/enclosure) circulate to: Copy To
T. L. Keelen
A. H. Anderegg
ETC Files

TORRANCE
SS-0007636

SC-1003-1 (Rev 1-60)

REFERENCE

SHELL CHEMICAL COMPANY

DATE APRIL 12, 1972

TO PLANT MANAGER

FROM MANAGER TECHNICAL

SUBJECT SHUTDOWN SCHEDULE FOR PLANT UTILITIES

Together with our utilities suppliers, we have considered the timing and method of discontinuing Plant utilities in accordance with the Torrance Plant Shutdown Schedule. The future requirements of the Elastomers Technical Center (ETC) have also been considered. With your concurrence, we will notify the appropriate utility companies of our plans in writing.

NATURAL GAS

Together with the ETC, we have arranged the following natural gas supply plan with Southern California Gas Company, (Mr. Ralph Owen, phone 679-2241.) Coordination will remain within the Technical Department.

Butadiene Unit

The Southern California Gas Company pressure regulator and metering services will remain to serve the ETC. The main supply is to be switched from exchange gas to an interruptible purchased supply by September 1 and domestic service from the Gas Company will be continued.

Styrene Unit

The Southern California Gas Company pressure reducing and metering facilities will be removed following the boiler shutdown about October 1. (Fuel oil inventories are being reduced to the minimum and storage tank T-2530 flushed with by-product aromatic oil by the Monomer Operations Department preparatory to final cleanout.)

Polymer Unit

The Southern California Gas Company pressure reducing and metering facilities will be removed about August 1, when a supply for the flare pilot will no longer be required.

WATER

Plant water supplies are obtained from both the Dominguez Water Corporation (DWC) and the Los Angeles Department of Water and Power (DWP). Following is a summary of suppliers for the major process areas:

TORRANCE
SO-0017300

Service	Butadiene/ETC	Polymer	Styrene
Domestic	DWP	DWP	DWP
Fire	DWP	DWP	DWP
Process	DWC	DWC	DWC, DWP

We have held preliminary discussions with Mr. Reeves of DWC and Mr. Learned of DWP.

We own backflow prevention devices at the points of supply and at certain internal points protecting our domestic systems. The Maintenance Department has prepared an up-to-date listing and location of these devices. We will advise Maintenance when these can be removed in order to obviate testing and service charges, as well as record-keeping. The custody of residual backflow devices will rest with the ETC Maintenance group.

Water meters are owned by our suppliers and will be removed by them as we advise DWC and DWP of discontinuance of our usage.

Fire protection must be continued to protect all Shell units. Fortunately, the standby charge for this service from DWP is minimal.

Bucadiene Unit

Domestic

The domestic supply to ETC will continue to be received via DWP meters and our backflow preventers.

Fire

The fire supply will continue to be received via DWP meters and our backflow preventers.

Process

Process water will be provided to ETC from DWC meters and our backflow preventers. Alternate process water service from DWP has already been disconnected.

Styrene Unit

To insure supply, both DWC and DWP supplies will remain active until decontamination and boiler operations have been terminated. We will arrange for removal of the DWC meters with Mr. A. L. Reeves at 834-2625. Removal of DWP meters will be handled with their Customer Service Department at 481-5411.

Domestic

The domestic supply (DWP) will be cut off about October 1, when Shell personnel are off the Styrene Plot.

Fire

The fire loop (DWP) will remain in service for the protection of the remaining facilities.

Process

Process service from DWC and DWP will be discontinued about October 1, following decommissioning of the Styrene boilers.

Polymer Unit

Domestic

Domestic service (DWP) will be discontinued about October 1, when Shell personnel are off the site.

Fire

Fire service (DWP) must be continued indefinitely for plant protection.

Process

Process service (DWC) will be required until October 1, for SRDU use. Moreover, washing of equipment contaminated with rubber and latex is expected to continue for an extended period after SBR shutdown.

COMPRESSED AIR

Overall plant service will be provided by electrically driven centrifugal air compressor K-2653 until September 15-October 1. Rentals will provide backup. This will be handled by Monomer Operations. ETC plan to relocate other, smaller existing compressors for their compressed air supply and have a target date of September 1.

EFFLUENT

We expect to formalize agreement soon for the disposal of all Plant waste water to the Los Angeles County Sanitation Districts, by the concurrence of their Industrial Waste Section and the Staff of the Regional Water Quality Board. This presumes no rainfall during the remaining life of the Plant and no upset causing the capacity of our process works to be exceeded. Similar arrangements are being made by ETC for their future waste water discharge. The overall Plant storm drain system will be active only during rainfall.

We will cancel our application to the Army Corps of Engineers for the Plant waste discharge permit in accordance with the 1899 Refuse Act in July. A similar application for rain water run-off by ETC will probably not be required, as it appears EPA has jurisdiction in this area.

We feel strongly that demolition operations on the plant site during Shell ownership should be conducted on a "dry" basis in order to avoid the tangle of permits, inspections, reports and mishaps associated with waste water flow to the Dominguez Channel or the Sanitation Districts. We believe "dry" demolition can be readily planned for. Head Office Engineering has indicated support for this strategy.

ORIGINAL SIGNED D. L. STAHL

LRD:pd

D. L. Stahl

cc: T. L. Keelen
A. D. Bike
R. L. Nauman
K. E. Noland
R. W. White
Central Files

Copy For

1 ~ K

SHELL CHEMICAL COMPANY

A DIVISION OF SHELL OIL COMPANY
P. O. BOX 211
TORRANCE, CALIFORNIA 90509

TELEPHONE 323-3030
321-2340

POLYMERS DIVISION
TORRANCE PLANT

May 16, 1972

SHELL CHEMICAL COMPANY
Elastomers Technical Center
RECEIVED
MAY 17 1972
TLK ✓ JGB ✓ RHM ✓ AHA cc KRA JTB JWC
DWF WRH JC ✓
To be handled by
Date completed
File 24-9

Mr. John D. Parkhurst,
Chief Engineer and General Manager
Sanitation Districts of Los Angeles County
2020 Beverly Boulevard
Los Angeles, California 90057

Attention Mr. J. G. Kremer, Supervisor in Charge,
Industrial Waste Division

Gentlemen:

The permanent shutdown of the Butadiene Section of our Plant has reduced our total waste water flow to approximately the same volume as our former process waste water flow averaging 1450 gpm for April. This has permitted us to generally meet the 1650 gpm discharge schedule to the Normandie JO "D" trunk sewer prescribed in your letter of July 31, 1968, without the discharge of any waste water to the Dominguez Channel. A minor proportion of the present waste water flow to the sanitary sewer is cooling water from open recirculating systems averaging about 5 cycles of concentration, and boiler blowdown of about 15 cycles of concentration, previously directed to the Channel. We foresee this approximate level of operation until July 1, 1972, when the Polymer and Styrene Sections of the Plant will also be shut down permanently. The washing of Plant equipment will provide most of the flow during July and August, with normal treatment, but with greatly reduced total volume. By September 1, we expect an average flow of 70 gpm from a research laboratory on the site to be the only industrial waste water stream remaining for disposal to the sanitary sewers. The laboratory is expected to remain in operation on the site until the first quarter of 1975.

In order to protect the waters of the Dominguez Channel during the unusual conditions which will prevail until September 1, we request your formal permission to continue disposal of all waste waters to the Normandie trunk sewer (excluding rainfall, of course). This will also permit us to immediately cancel our application for a permit to discharge waste water to the Dominguez Channel from the Army Corps of Engineers.

The timing of our Plant shutdown corresponds with the July 1, 1972, effective date of certain new requirements of the Districts for industrial waste water discharge. We request that, in the case of our Plant, these requirements be deferred until September 1, 1972. Prior to July 1, 1972, we will be able to submit for your approval a new process flow diagram, operating procedures and proposed discharge schedule for waste water disposal from the continued operation of research laboratory.

We would appreciate your early concurrence with the foregoing proposed plan of action.

Yours very truly,

ORIGINAL SIGNED BY E. S. MARTIN

LRD:pd

E. S. Martin
Plant Manager

bc: Houston - Polymers Division - Manager Manufacturing

bbc: T. L. Keelen ← Copy For
D. L. Stahl
R. W. White
Central Files
Chron File

RWW
DLS
WHP
TLK
ESM
RLD

SHELL CHEMICAL COMPANY
Elastomers Technical Center
RECEIVED
JUN 1 1972
To be handled by
Date completed
File
24-9

JGB
RAW
AHA
DWF
KRA
JTB

HGH HIS

TCP078 05/31

HGH PD MGR MFG

CC HIS MGR

CC TCP ETC DIRECTOR - T L KEELEN / DLVD/

THE CONCURRENCE OF THE LOW ANGELES COUNTY SANITATION DISTRICTS TO ACCEPT ALL PLANT PROCESS AND DECONTAMINATION WATERS UNTIL SEPTEMBER 1 HAS NOW PERMITTED US TO WITHDRAW OUR APPLICATION FOR DISCHARGE TO PUBLIC WATERS FROM THE ARMY CORPS OF ENGINEERS. MOREOVER, THE DISTRICTS HAVE INDICATED THEIR WILLINGNESS TO ACCEPT FUTURE PROCESS WASTE WATERS FROM THE ELASTOMERS TECHNICAL CENTER UPON OUR PROVISION OF THE NECESSARY TREATMENT FACILITIES / AVAILABLE / AND FORMAL APPLICATION. THIS MEANS THAT WE ARE, HENCEFORTH, NOMINALLY LIMITED TO THE DISCHARGE OF ONLY RAINFALL TO THE DOMINGUEZ CHANNEL.

THE FOREGOING REQUIRES THAT THE DISPOSAL OF ANY WASTE WATER GENERATED DURING PLANT DEMOLITION OPERATIONS BE THE RESPONSIBILITY OF THE CONTRACTOR, AND WASTE WATER IS NOT TO BE DISCHARGED TO EITHER THE SANITARY SEWER OR THE STORM DRAINS., I.E., WATER USAGE MUST BE MINIMIZED, RUNOFF TRAPPED AND TRUCKED TO A LEGAL DISPOSAL SITE. WE BELIEVE THAT THIS REQUIREMENT SHOULD BE CLEARLY SPELLED OUT IN ANY DEMOLITION CONTRACT, TOGETHER WITH THE REQUIREMENT FOR MEETING ALL OTHER APPLICABLE ENVIROMENTAL REGULATIONS.

IF YOU CONCUR, WE SUGGEST THAT H O ENGINEERING BE REQUESTED TO INCORPORATE THESE REQUIREMENTS IN THE DEMOLITION SPECIFICATIONS WHICH THEY ARE CURRENTLY PREPARING.

TORRANCE
SS-0005133

TCP E S MARTIN / LRB/

SC-1003 (Rev. 1-60)

REFERENCE

SHELL CHEMICAL COMPANY

24-9

DATE JUNE 6, 1972

TO ELASTOMERS TECHNICAL CENTER
DIRECTOR

FROM MANAGER TECHNICAL - TORRANCE PLANT

SUBJECT WASTE WATER DISPOSAL

SHELL CHEMICAL COMPANY
Elastomers Technical Center
RECEIVED
JUN 7 1972
CU 7-7
DWF
WRH
JC
To be handled by letter
Date completed 9-13-72
File
attach w/action cy

As agreed, the application for a permit to discharge waste water to the Dominguez Channel under the 1899 Refuse Act has been withdrawn. A copy of the cancellation letter is attached.

The County Sanitation Districts have agreed to accept all Plant waste waters until September 1, and after that date will accept process effluent from the ETC upon submission of a formal application and provision of the required treatment facilities.

The ordinance pertaining to industrial waste disposal to the Sanitation Districts was revised effective April 1, 1972. (A copy of this ordinance and a permit application form are attached.) This ordinance requires reporting information about the composition of waste water discharged in considerably more detail than was previously necessary. The Sanitation Districts have waived these new requirements for the Plant, however. Even though the ETC can continue to dispose of its waste water in the current fashion until September 1 without further authorization, the Sanitation Districts have specified that beginning July 1, this flow is to be measured and controlled. To permit this, temporary modifications have been made to direct the stream through the oil separator basins, a flow recorder, an automatic neutralizer, and an air flotation unit for final clean up and inspection prior to co-mingling with the Plant process effluent. The details of the required reporting should be worked out with the Sanitation Districts. We believe, however, that you should plan to measure and record flow volume, pH, COD and total dispersed solids (daily composite sample), beginning July 1. We further recommend that appropriate steps be taken to insure that rainfall will not enter your process waste water system. A flow sheet utilizing existing equipment showing our recommendations for permanent process waste water facilities is being prepared and will be available for your review shortly.

On a related matter, we understand that the Division has proposed that provisions to impound and remove with a vacuum truck all waters generated in the demolition of the Torrance Plant be included in the demolition contract. It is our understanding that this inclusion in the contract will make control of waste water discharge from the Torrance Plant during demolition the responsibility of the contractor and Head Office Engineering.

TORRANCE
SS-0005023

We will be available to assist you in preparing the formal application for submission to the Sanitation Districts, and developing "working level" contacts.

DLS:LRD:pd

D. L. Stahl

Attachments

cc: Torrance Plant - Manager
Houston - PD - E & A - Manager
Houston - Head Office Engineering - Environmental Engineering - Manager

24-9

SHELL CHEMICAL COMPANY
A DIVISION OF SHELL OIL COMPANY
P. O. BOX 211
TORRANCE, CALIFORNIA 90509

TELEPHONE 323-3030
321-2340

ELASTOMERS
TECHNICAL CENTER

June 13, 1972

Air Pollution Control District
County of Los Angeles
434 South San Pedro Street
Los Angeles, California 90013

Attention: Mr. R. C. Murray

Gentlemen:

Enclosed are eight "Application For Authority To Construct And Permits To Operate" alterations and additions that are part of our Project P/KETC, Isolation and Consolidation of Elastomers Technical Center (formerly Research Laboratory). The applications are listed in Attachment I.

As you know, utility and support services for the Elastomers Technical Center have been supplied by the Torrance Plant. With the closing of the Plant and the shutdown of the production units, it will no longer be economical or physically possible to continue to supply these through existing systems. Hence, they are being modified or where necessary replaced with facilities which can more efficiently supply the much smaller demands of the Elastomers Technical Center which includes the recently completed Polymer Development Facilities. We anticipate this transition to be completed on or about September 1, 1972.

A draft in the amount of $320 covering the eight applications is attached.

Please contact me for any additional information.

Very truly yours,

ORIGINAL SIGNED BY A. H. ANDEREGG

A. H. Anderegg, Supervisor
Administrative Services

Attachments

bc - T. L. Keelan w/o
E. S. Martin w/o
L. R. Donkle w/Attachment I
J. T. Bailey w/Attachment I
H. D. Craft w/Attachment I
H. Hogue w/Attachment I
ETC File 24-9 w/Attachment
Chron. File

TORRANCE
SS-0005117

ATTACHMENT I

LIST OF APPLICATIONS AND ATTACHMENTS

BOILER, F-IR

Boiler and Liquid Heater Information Sheet
Process Description
Excerpts From VA Power Catalog
Flow Diagram YT-15800
Plot Plans YT-15815, YT-15864

BOILER, F-2R

Same as Boiler, F-IR

BOILER, F-3R

Same as Boiler, F-IR

MONOMER STORAGE AND UNLOADING SYSTEM

Storage Tank Summary Sheets T-100R, V-151, V-156
Process Description
Flow Diagram WT-15863
Plot Plan YT-15864

WASTE SOLVENT STORAGE SYSTEM

Storage Tank Summary Sheets V-127, V-128
Process Description
Flow Diagram YT-15805
Plot Plan YT-15864

RECOVERED SOLVENT PURIFICATION SYSTEM

Storage Tank Summary Sheets V-101, V-102, V-109, V-110
Process Description
Flow Diagram YT-15787
Plot Plan YT-15864

VENT, RELIEF, AND FLARE SYSTEM

Storage Tank Summary Sheets V-124, T-301
Process Description
Flow Diagrams YT-15804, YT-15862
Plot Plan YT-15864

SOLVENT STORAGE VESSELS V-123R, V-124R, V-125R

(Alteration - Tie Existing Tanks Into New Vent, Relief, and Flare System).

DO NOT REMOVE CARBONS OR SEPARATE
Three white copies must be submitted.
Yellow copy should be retained by applicant.

AIR POLLUTION CONTROL DISTRICT - COUNTY OF LOS ANGELES
434 SOUTH SAN PEDRO STREET, LOS ANGELES, CALIF. 90013 MADISON 9-4711

APPLICATION FOR AUTHORITY TO CONSTRUCT AND PERMIT TO OPERATE

APPLICATION INSTRUCTIONS

A. USE ONE APPLICATION FORM 400-A FOR EACH PERMIT UNIT OF BASIC EQUIPMENT AND ONE APPLICATION FORM 400-A FOR EACH PERMIT UNIT OF AIR POLLUTION CONTROL EQUIPMENT. CALL MA 9-4711, EXT. 66165 FOR ASSISTANCE.

B. A $40 FILING FEE MUST ACCOMPANY EACH APPLICATION. (A $10 FILING FEE WILL BE ACCEPTED FOR A CHANGE OF OWNERSHIP APPLICATION WHERE NO ALTERATION, ADDITION OR CHANGE OF LOCATION HAS OCCURRED.) THE TOTAL PERMIT FEE, WHICH MAY EXCEED THE $40 FILING FEE, MUST BE PAID BEFORE PERMIT TO OPERATE CAN BE GRANTED. MAKE CHECK OR MONEY ORDER PAYABLE TO: AIR POLLUTION CONTROL DISTRICT, COUNTY OF LOS ANGELES.

C. EACH APPLICATION MUST BE FILLED OUT COMPLETELY AND FILED IN TRIPLICATE. ACCOMPANYING PLANS MUST BE IN DUPLICATE.

D. EACH APPLICATION MUST BE SIGNED BY A RESPONSIBLE MEMBER OF THE ORGANIZATION THAT IS TO OPERATE THE EQUIPMENT.

INCOMPLETE APPLICATIONS NOT ACCEPTABLE

1A. PERMIT TO BE ISSUED TO:
SHELL CHEMICAL COMPANY, A DIVISION OF SHELL OIL COMPANY
BUSINESS LICENSE NAME OF ORGANIZATION THAT IS TO RECEIVE PERMIT

1B.
NAME (OR NAMES) OF OWNER OR PRINCIPAL PARTNERS DOING BUSINESS AS (dba) ABOVE ORGANIZATION

2A. MAILING ADDRESS:
P. O. Box 211 — NUMBER
Torrance, — CITY OR COMMUNITY
California — STATE
2B. 90509 — ZIP CODE

3A. EQUIPMENT LOCATION ADDRESS:
19821 S. Hamilton Street — NUMBER, STREET
Los Angeles — CITY OR COMMUNITY
ZIP CODE
3B. Torrance Blvd. — NEAREST INTERSECTING STREET

4. EQUIPMENT DESCRIPTION.
APPLICATION IS HEREBY MADE FOR AUTHORITY TO CONSTRUCT AND PERMIT TO OPERATE THE FOLLOWING EQUIPMENT:

Boiler F-IR

5. IF THIS EQUIPMENT HAD A PREVIOUS WRITTEN PERMIT, STATE NAME OF CORPORATION, COMPANY, OR INDIVIDUAL OWNER THAT OPERATED THIS EQUIPMENT, AND STATE PREVIOUS AIR POLLUTION CONTROL DISTRICT PERMIT NUMBER.

NAME — PREVIOUS PERMIT NUMBER

6. PERMIT APPLICATION REASON:
16
- NEW CONSTRUCTION [X] 1
- ALTERATION [ ] 2
- CHANGE OF LOCATION [ ] 3
- CHANGE OF OWNERSHIP [ ] 4

7. TYPE OF ORGANIZATION:
17
- CORPORATION [X] 1
- PARTNERSHIP [ ] 2
- INDIVIDUAL OWNER [ ] 3
- GOV'T. AGENCY [ ] 4

8. ESTIMATED COST OF EQUIPMENT OR ALTERATION:
AIR POLLUTION CONTROL EQUIPMENT $ --
BASIC EQUIPMENT $ 50,000

9. FOR THE NEW CONSTRUCTION, ALTERATION, TRANSFER OF OWNERSHIP OR LOCATION, WHAT IS THE
ESTIMATED STARTING DATE? 6-1-72 ESTIMATED COMPLETION DATE? 9-1-72

10. GENERAL NATURE OF BUSINESS:
Research Laboratory

TORRANCE
SS-0005119

11. SIGNATURE OF RESPONSIBLE MEMBER OF ORGANIZATION:
→ A. H. Anderegg

13. OFFICIAL TITLE OF SIGNER:
Supervisor Administrative Services

12. TYPED OR PRINTED NAME OF SIGNER:
A. H. Anderegg

14. DATE:
June 15, 1972

15. PHONE NUMBER:
323-3030

ST. LIST NO. 2-6	I.D. NO.: 7-14	ALPHA LIST: 71-78	TS NO.: 79-80	CLASS: 18 I [ ] II [ ] III [ ] 3
ASSIGNMENT: 19-20	WORK UNITS: 21-24	APPLICATION NO.: 31-36	EQUIP. CAT. NO.: 38-45	TYPE: 46 B OR C
ENGR.	A/C	P/S		

DATION 25-29 (III)

DO NOT REMOVE CARBONS OR SEPARATE
Three white copies must be submitted.
Yellow copy should be retained by applicant.

AIR POLLUTION CONTROL DISTRICT - COUNTY OF LOS ANGELES
434 SOUTH SAN PEDRO STREET, LOS ANGELES, CALIF. 90013 MADISON 9-4711

APPLICATION FOR AUTHORITY TO CONSTRUCT AND PERMIT TO OPERATE

APPLICATION INSTRUCTIONS

A. USE ONE APPLICATION FORM 400-A FOR EACH PERMIT UNIT OF BASIC EQUIPMENT AND ONE APPLICATION FORM 400-A FOR EACH PERMIT UNIT OF AIR POLLUTION CONTROL EQUIPMENT. CALL MA 9-4711, EXT. 66165 FOR ASSISTANCE.

B. A $40 FILING FEE MUST ACCOMPANY EACH APPLICATION. (A $10 FILING FEE WILL BE ACCEPTED FOR A CHANGE OF OWNERSHIP APPLICATION WHERE NO ALTERATION, ADDITION OR CHANGE OF LOCATION HAS OCCURRED.) THE TOTAL PERMIT FEE, WHICH MAY EXCEED THE $40 FILING FEE, MUST BE PAID BEFORE PERMIT TO OPERATE CAN BE GRANTED. MAKE CHECK OR MONEY ORDER PAYABLE TO: AIR POLLUTION CONTROL DISTRICT, COUNTY OF LOS ANGELES.

C. EACH APPLICATION MUST BE FILLED OUT COMPLETELY AND FILED IN TRIPLICATE. ACCOMPANYING PLANS MUST BE IN DUPLICATE.

D. EACH APPLICATION MUST BE SIGNED BY A RESPONSIBLE MEMBER OF THE ORGANIZATION THAT IS TO OPERATE THE EQUIPMENT.

INCOMPLETE APPLICATIONS NOT ACCEPTABLE

1A. PERMIT TO BE ISSUED TO:
SHELL CHEMICAL COMPANY, A DIVISION OF SHELL OIL COMPANY
BUSINESS LICENSE NAME OF ORGANIZATION THAT IS TO RECEIVE PERMIT

1B.
NAME (OR NAMES) OF OWNER OR PRINCIPAL PARTNERS DOING BUSINESS AS (dba) ABOVE ORGANIZATION

2A. MAILING ADDRESS:
P. O. Box 211 — Torrance — California
NUMBER STREET — CITY OR COMMUNITY — STATE

2B. 90509
ZIP CODE

3A. EQUIPMENT LOCATION ADDRESS:
19821 S. Hamilton St. — Los Angeles
NUMBER STREET — CITY OR COMMUNITY — ZIP CODE

3B. Torrance Blvd.
NEAREST INTERSECTING STREET

4. EQUIPMENT DESCRIPTION.
APPLICATION IS HEREBY MADE FOR AUTHORITY TO CONSTRUCT AND PERMIT TO OPERATE THE FOLLOWING EQUIPMENT:

Boiler F-2R

5. IF THIS EQUIPMENT HAD A PREVIOUS WRITTEN PERMIT, STATE NAME OF CORPORATION, COMPANY, OR INDIVIDUAL OWNER THAT OPERATED THIS EQUIPMENT, AND STATE PREVIOUS AIR POLLUTION CONTROL DISTRICT PERMIT NUMBER.
NAME — PREVIOUS PERMIT NUMBER

6. PERMIT APPLICATION REASON:
16 NEW CONSTRUCTION [X] 1
ALTERATION [ ] 2
CHANGE OF LOCATION [ ] 3
CHANGE OF OWNERSHIP [ ] 4

7. TYPE OF ORGANIZATION:
17 CORPORATION [X] 1
PARTNERSHIP [ ] 2
INDIVIDUAL OWNER [ ] 3
GOV'T. AGENCY [ ] 4

8. ESTIMATED COST OF EQUIPMENT OR ALTERATION:
AIR POLLUTION CONTROL EQUIPMENT $ --
BASIC EQUIPMENT $ 50,000

9. FOR THE NEW CONSTRUCTION, ALTERATION, TRANSFER OF OWNERSHIP OR LOCATION, WHAT IS THE ESTIMATED STARTING DATE? 6/1/72 ESTIMATED COMPLETION DATE? 9/1/72

10. GENERAL NATURE OF BUSINESS:
Research Laboratory
TORRANCE
SS-0005120

11. SIGNATURE OF RESPONSIBLE MEMBER OF ORGANIZATION:
→

13. OFFICIAL TITLE OF SIGNER:
Supervisor Administrative Services

12. TYPED OR PRINTED NAME OF SIGNER:
A. H. Anderegg

14. DATE:

15. PHONE NUMBER:
323-3030

USE ONLY

ST. LIST NO. 2-6	I.D. NO.: 7-14	ALPHA LIST: 71-78	TS NO.: 79-80	CLASS: 18 I [ ] 1 III [ ] 3
ASSIGNMENT: 19-20 UNIT SYSTEM	WORK UNITS: 21-24 A/C P/O	APPLICATION NO.: 31-36	EQUIP. CAT. NO.: 38-45	TYPE: 46 B OR C
VALIDATION 25-29 (III)				

DO NOT REMOVE CARBONS OR SEPARATE
Three white copies must be submitted.
Yellow copy should be retained by applicant.

AIR POLLUTION CONTROL DISTRICT - COUNTY OF LOS ANGELES
434 SOUTH SAN PEDRO STREET, LOS ANGELES, CALIF. 90013 MADISON 9-4711

APPLICATION FOR AUTHORITY TO CONSTRUCT AND PERMIT TO OPERATE

APPLICATION INSTRUCTIONS

A. USE ONE APPLICATION FORM 400-A FOR EACH PERMIT UNIT OF BASIC EQUIPMENT AND ONE APPLICATION FORM 400-A FOR EACH PERMIT UNIT OF AIR POLLUTION CONTROL EQUIPMENT. CALL MA 9-4711, EXT. 66165 FOR ASSISTANCE.

B. A $40 FILING FEE MUST ACCOMPANY EACH APPLICATION. (A $10 FILING FEE WILL BE ACCEPTED FOR A CHANGE OF OWNERSHIP APPLICATION WHERE NO ALTERATION, ADDITION OR CHANGE OF LOCATION HAS OCCURRED.) THE TOTAL PERMIT FEE, WHICH MAY EXCEED THE $40 FILING FEE, MUST BE PAID BEFORE PERMIT TO OPERATE CAN BE GRANTED. MAKE CHECK OR MONEY ORDER PAYABLE TO: AIR POLLUTION CONTROL DISTRICT, COUNTY OF LOS ANGELES.

C. EACH APPLICATION MUST BE FILLED OUT COMPLETELY AND FILED IN TRIPLICATE. ACCOMPANYING PLANS MUST BE IN DUPLICATE.

D. EACH APPLICATION MUST BE SIGNED BY A RESPONSIBLE MEMBER OF THE ORGANIZATION THAT IS TO OPERATE THE EQUIPMENT.

INCOMPLETE APPLICATIONS NOT ACCEPTABLE

1A. PERMIT TO BE ISSUED TO:
SHELL CHEMICAL COMPANY, A DIVISION OF SHELL OIL COMPANY
BUSINESS LICENSE NAME OF ORGANIZATION THAT IS TO RECEIVE PERMIT

1B.
NAME (OR NAMES) OF OWNER OR PRINCIPAL PARTNERS DOING BUSINESS AS (dba) ABOVE ORGANIZATION

2A. MAILING ADDRESS:
P. O. Box 211 — NUMBER
Torrance — STREET
California — CITY OR COMMUNITY
2B. 90509 — ZIP CODE

3A. EQUIPMENT LOCATION ADDRESS:
19821 S. Hamilton St. — NUMBER STREET
Los Angeles — CITY OR COMMUNITY ZIP CODE

3B. Torrance Blvd. — NEAREST INTERSECTING STREET

4. EQUIPMENT DESCRIPTION.
APPLICATION IS HEREBY MADE FOR AUTHORITY TO CONSTRUCT AND PERMIT TO OPERATE THE FOLLOWING EQUIPMENT:

Boiler F-3R

5. IF THIS EQUIPMENT HAD A PREVIOUS WRITTEN PERMIT, STATE NAME OF CORPORATION, COMPANY, OR INDIVIDUAL OWNER THAT OPERATED THIS EQUIPMENT, AND STATE PREVIOUS AIR POLLUTION CONTROL DISTRICT PERMIT NUMBER.

NAME — PREVIOUS PERMIT NUMBER

6. PERMIT APPLICATION REASON:
16 NEW CONSTRUCTION [X] 1
ALTERATION [ ] 2
CHANGE OF LOCATION [ ] 3
CHANGE OF OWNERSHIP [ ] 4

7. TYPE OF ORGANIZATION:
17 CORPORATION [X] 1
PARTNERSHIP [ ] 2
INDIVIDUAL OWNER [ ] 3
GOV'T. AGENCY [ ] 4

8. ESTIMATED COST OF EQUIPMENT OR ALTERATION:
AIR POLLUTION CONTROL EQUIPMENT $ --
BASIC EQUIPMENT $ 40,000

9. FOR THE NEW CONSTRUCTION, ALTERATION, TRANSFER OF OWNERSHIP OR LOCATION, WHAT IS THE ESTIMATED STARTING DATE? 6/1/72 ESTIMATED COMPLETION DATE? 9/1/72

10. GENERAL NATURE OF BUSINESS:
Research Laboratory

TORRANCE
SS-0005121

11. SIGNATURE OF RESPONSIBLE MEMBER OF ORGANIZATION:
→ [signature]

13. OFFICIAL TITLE OF SIGNER:
Supervisor Administrative Services

12. TYPED OR PRINTED NAME OF SIGNER:
A. H. Anderegg

14. DATE: June 15, 1972

15. PHONE NUMBER: 323-3030

ST. LIST NO. 2-6	I.D. NO.: 7-14	ALPHA LIST: 71-78	TS NO.: 79-80	CLASS: 18 I. [ ] I III [ ] 3
ASSIGNMENT: 19-20 UNIT ENGR.	WORK UNITS: 21-24 A/C P/O	APPLICATION NO.: 31-36	EQUIP. CAT. NO.: 38-45	TYPE: 46 B OR C

VALIDATION 25-29 (iii)

DO NOT REMOVE CARBONS OR SEPARATE
Three white copies must be submitted.
Yellow copy should be retained by applicant.

AIR POLLUTION CONTROL DISTRICT - COUNTY OF LOS ANGELES
434 SOUTH SAN PEDRO STREET, LOS ANGELES, CALIF. 90013 MADISON 9-4711

APPLICATION FOR AUTHORITY TO CONSTRUCT AND PERMIT TO OPERATE

APPLICATION INSTRUCTIONS

A. USE ONE APPLICATION FORM 400-A FOR EACH PERMIT UNIT OF BASIC EQUIPMENT AND ONE APPLICATION FORM 400-A FOR EACH PERMIT UNIT OF AIR POLLUTION CONTROL EQUIPMENT. CALL MA 9-4711, EXT. 66165 FOR ASSISTANCE.

B. A $40 FILING FEE MUST ACCOMPANY EACH APPLICATION. (A $10 FILING FEE WILL BE ACCEPTED FOR A CHANGE OF OWNERSHIP APPLICATION WHERE NO ALTERATION, ADDITION OR CHANGE OF LOCATION HAS OCCURRED.) THE TOTAL PERMIT FEE, WHICH MAY EXCEED THE $40 FILING FEE, MUST BE PAID BEFORE PERMIT TO OPERATE CAN BE GRANTED. MAKE CHECK OR MONEY ORDER PAYABLE TO: AIR POLLUTION CONTROL DISTRICT, COUNTY OF LOS ANGELES.

C. EACH APPLICATION MUST BE FILLED OUT COMPLETELY AND FILED IN TRIPLICATE. ACCOMPANYING PLANS MUST BE IN DUPLICATE.

D. EACH APPLICATION MUST BE SIGNED BY A RESPONSIBLE MEMBER OF THE ORGANIZATION THAT IS TO OPERATE THE EQUIPMENT.

INCOMPLETE APPLICATIONS NOT ACCEPTABLE

1A. PERMIT TO BE ISSUED TO:
SHELL CHEMICAL COMPANY, A DIVISION OF SHELL OIL COMPANY
BUSINESS LICENSE NAME OF ORGANIZATION THAT IS TO RECEIVE PERMIT

1B.
NAME (OR NAMES) OF OWNER OR PRINCIPAL PARTNERS DOING BUSINESS AS (dba) ABOVE ORGANIZATION

2A. MAILING ADDRESS:
P. O. Box 211 — Torrance, — California
NUMBER STREET — CITY OR COMMUNITY — STATE

2B. 90509
ZIP CODE

3A. EQUIPMENT LOCATION ADDRESS:
19821 Hamilton Street — Los Angeles
NUMBER STREET — CITY OR COMMUNITY — ZIP CODE

3B. Torrance Blvd.
NEAREST INTERSECTING STREET

4. EQUIPMENT DESCRIPTION.
APPLICATION IS HEREBY MADE FOR AUTHORITY TO CONSTRUCT AND PERMIT TO OPERATE THE FOLLOWING EQUIPMENT:

Monomer Storage and Unloading System which includes
Monomer Storage Tank and Vessels T-100R, V-151 and V-156.
Recirculation Pumps P-130R, P-160, and P-167.

5. IF THIS EQUIPMENT HAD A PREVIOUS WRITTEN PERMIT, STATE NAME OF CORPORATION, COMPANY, OR INDIVIDUAL OWNER THAT OPERATED THIS EQUIPMENT, AND STATE PREVIOUS AIR POLLUTION CONTROL DISTRICT PERMIT NUMBER.
NAME — PREVIOUS PERMIT NUMBER

6. PERMIT APPLICATION REASON:
16 NEW CONSTRUCTION [ ] 1
ALTERATION [X] 2
CHANGE OF LOCATION [X] 3
CHANGE OF OWNERSHIP [ ] 4

7. TYPE OF ORGANIZATION:
17 CORPORATION [X] 1
PARTNERSHIP [ ] 2
INDIVIDUAL OWNER [ ] 3
GOV'T. AGENCY [ ] 4

8. ESTIMATED COST OF EQUIPMENT OR ALTERATION:
AIR POLLUTION CONTROL EQUIPMENT $ 2,000
BASIC EQUIPMENT $ 25,000

9. FOR THE NEW CONSTRUCTION, ALTERATION, TRANSFER OF OWNERSHIP OR LOCATION, WHAT IS THE
ESTIMATED STARTING DATE? 6/1/72 ESTIMATED COMPLETION DATE? 9/1/72

10. GENERAL NATURE OF BUSINESS:
Research Laboratory

TORRANCE
SS-0005122

11. SIGNATURE OF RESPONSIBLE MEMBER OF ORGANIZATION:
→ A. H. Anderegg

13. OFFICIAL TITLE OF SIGNER:
Supervisor Administrative Services

12. TYPED OR PRINTED NAME OF SIGNER:
A. H. Anderegg

14. DATE:
June 15, 1972

15. PHONE NUMBER:
323-3030

USE ONLY

ST. LIST NO. 2-6 | I.D. NO.: 7-14 | ALPHA LIST: 71-78 | TS NO.: 79-80 | CLASS: I [ ] II 18 III [ ] 3

ASSIGNMENT: 19-20 (UNIT, ENGR.) | WORK UNITS: 21-24 (A-C, P-E) | APPLICATION NO.: 31-36 | EQUIP. CAT. NO.: 38-45 | TYPE: 46 B OR C

VALIDATION 25-29 (III)

DO NOT REMOVE CARBONS OR SEPARATE
Three white copies must be submitted.
Yellow copy should be retained by applicant.

AIR POLLUTION CONTROL DISTRICT - COUNTY OF LOS ANGELES
434 SOUTH SAN PEDRO STREET, LOS ANGELES, CALIF. 90013 MADISON 9-4711

APPLICATION FOR AUTHORITY TO CONSTRUCT AND PERMIT TO OPERATE

APPLICATION INSTRUCTIONS

A. USE ONE APPLICATION FORM 400-A FOR EACH PERMIT UNIT OF BASIC EQUIPMENT AND ONE APPLICATION FORM 400-A FOR EACH PERMIT UNIT OF AIR POLLUTION CONTROL EQUIPMENT. CALL MA 9-4711, EXT. 66165 FOR ASSISTANCE.

B. A $40 FILING FEE MUST ACCOMPANY EACH APPLICATION. (A $10 FILING FEE WILL BE ACCEPTED FOR A CHANGE OF OWNERSHIP APPLICATION WHERE NO ALTERATION, ADDITION OR CHANGE OF LOCATION HAS OCCURRED.) THE TOTAL PERMIT FEE, WHICH MAY EXCEED THE $40 FILING FEE, MUST BE PAID BEFORE PERMIT TO OPERATE CAN BE GRANTED. MAKE CHECK OR MONEY ORDER PAYABLE TO: AIR POLLUTION CONTROL DISTRICT, COUNTY OF LOS ANGELES.

C. EACH APPLICATION MUST BE FILLED OUT COMPLETELY AND FILED IN TRIPLICATE. ACCOMPANYING PLANS MUST BE IN DUPLICATE.

D. EACH APPLICATION MUST BE SIGNED BY A RESPONSIBLE MEMBER OF THE ORGANIZATION THAT IS TO OPERATE THE EQUIPMENT.

INCOMPLETE APPLICATIONS NOT ACCEPTABLE

1A. PERMIT TO BE ISSUED TO:
SHELL CHEMICAL COMPANY, A DIVISION OF SHELL OIL COMPANY
BUSINESS LICENSE NAME OF ORGANIZATION THAT IS TO RECEIVE PERMIT

1B.
NAME (OR NAMES) OF OWNER OR PRINCIPAL PARTNERS DOING BUSINESS AS (dba) ABOVE ORGANIZATION

2A. MAILING ADDRESS:
P. O. Box 211 — NUMBER STREET
Torrance — CITY OR COMMUNITY
California — STATE
2B. 90509 — ZIP CODE

3A. EQUIPMENT LOCATION ADDRESS:
19821 S. Hamilton St. — NUMBER STREET
Los Angeles — CITY OR COMMUNITY
ZIP CODE
3B. Torrance Blvd. — NEAREST INTERSECTING STREET

4. EQUIPMENT DESCRIPTION.
APPLICATION IS HEREBY MADE FOR AUTHORITY TO CONSTRUCT AND PERMIT TO OPERATE THE FOLLOWING EQUIPMENT:

Waste Solvent Storage System which includes vessels, V-127 and V-128, and solvent feed pump, P-707.

5. IF THIS EQUIPMENT HAD A PREVIOUS WRITTEN PERMIT, STATE NAME OF CORPORATION, COMPANY, OR INDIVIDUAL OWNER THAT OPERATED THIS EQUIPMENT, AND STATE PREVIOUS AIR POLLUTION CONTROL DISTRICT PERMIT NUMBER:
NAME — PREVIOUS PERMIT NUMBER

6. PERMIT APPLICATION REASON:
16
- NEW CONSTRUCTION [ ] 1
- ALTERATION [X] 2
- CHANGE OF LOCATION [ ] 3
- CHANGE OF OWNERSHIP [ ] 4

7. TYPE OF ORGANIZATION:
17
- CORPORATION [X] 1
- PARTNERSHIP [ ] 2
- INDIVIDUAL OWNER [ ] 3
- GOV'T. AGENCY [ ] 4

8. ESTIMATED COST OF EQUIPMENT OR ALTERATION:
AIR POLLUTION CONTROL EQUIPMENT $ ——
BASIC EQUIPMENT $ 10,000

9. FOR THE NEW CONSTRUCTION, ALTERATION, TRANSFER OF OWNERSHIP OR LOCATION, WHAT IS THE
ESTIMATED STARTING DATE? 6/1/72 ESTIMATED COMPLETION DATE? 9/1/72

10. GENERAL NATURE OF BUSINESS:
Research Laboratory

TORRANCE
SS-0005123

11. SIGNATURE OF RESPONSIBLE MEMBER OF ORGANIZATION:
[signature]

13. OFFICIAL TITLE OF SIGNER:
Supervisor Administrative Services

12. TYPED OR PRINTED NAME OF SIGNER:
A. H. Anderegg

14. DATE:
June 15, 1972

15. PHONE NUMBER:
323-3030

ST. LIST NO. 2-6 | I.D. NO.: 7-14 | ALPHA LIST: 71-78 | TS NO.: 79-80 | CLASS: I [ ] II [ ] III [ ] 18

ASSIGNMENT: 19-20 | WORK UNITS: 21-24 | APPLICATION NO.: 31-36 | EQUIP. CAT. NO.: 38-45 | TYPE: 46

UNIT ENGR. A.C P.C | B OR C

VALIDATION 55-99 (III)

ATRO 75

DO NOT REMOVE CARBONS OR SEPARATE
Three white copies must be submitted.
Yellow copy should be retained by applicant.

AIR POLLUTION CONTROL DISTRICT - COUNTY OF LOS ANGELES
434 SOUTH SAN PEDRO STREET, LOS ANGELES, CALIF. 90013 MADISON 9-4711

APPLICATION FOR AUTHORITY TO CONSTRUCT AND PERMIT TO OPERATE

APPLICATION INSTRUCTIONS

A. USE ONE APPLICATION FORM 400-A FOR EACH PERMIT UNIT OF BASIC EQUIPMENT AND ONE APPLICATION FORM 400-A FOR EACH PERMIT UNIT OF AIR POLLUTION CONTROL EQUIPMENT. CALL MA 9-4711, EXT. 66165 FOR ASSISTANCE.

B. A $40 FILING FEE MUST ACCOMPANY EACH APPLICATION. (A $10 FILING FEE WILL BE ACCEPTED FOR A CHANGE OF OWNERSHIP APPLICATION WHERE NO ALTERATION, ADDITION OR CHANGE OF LOCATION HAS OCCURRED.) THE TOTAL PERMIT FEE, WHICH MAY EXCEED THE $40 FILING FEE, MUST BE PAID BEFORE PERMIT TO OPERATE CAN BE GRANTED. MAKE CHECK OR MONEY ORDER PAYABLE TO: AIR POLLUTION CONTROL DISTRICT, COUNTY OF LOS ANGELES.

C. EACH APPLICATION MUST BE FILLED OUT COMPLETELY AND FILED IN TRIPLICATE. ACCOMPANYING PLANS MUST BE IN DUPLICATE.

D. EACH APPLICATION MUST BE SIGNED BY A RESPONSIBLE MEMBER OF THE ORGANIZATION THAT IS TO OPERATE THE EQUIPMENT.

INCOMPLETE APPLICATIONS NOT ACCEPTABLE

1A. PERMIT TO BE ISSUED TO:
SHELL CHEMICAL COMPANY, A DIVISION OF SHELL OIL COMPANY
BUSINESS LICENSE NAME OF ORGANIZATION THAT IS TO RECEIVE PERMIT

1B.
NAME (OR NAMES) OF OWNER OR PRINCIPAL PARTNERS DOING BUSINESS AS (dba) ABOVE ORGANIZATION

2A. MAILING ADDRESS:
P. O. Box 211 — Torrance, California
NUMBER STREET — CITY OR COMMUNITY — STATE

2B. 90509
ZIP CODE

3A. EQUIPMENT LOCATION ADDRESS:
19821 S. Hamilton Street — Los Angeles
NUMBER STREET — CITY OR COMMUNITY — ZIP CODE

3B. Torrance Blvd.
NEAREST INTERSECTING STREET

4. EQUIPMENT DESCRIPTION.
APPLICATION IS HEREBY MADE FOR AUTHORITY TO CONSTRUCT AND PERMIT TO OPERATE THE FOLLOWING EQUIPMENT:

Recovered solvent purification system as described in the attached process flow sheet and job description.

5. IF THIS EQUIPMENT HAD A PREVIOUS WRITTEN PERMIT, STATE NAME OF CORPORATION, COMPANY, OR INDIVIDUAL OWNER THAT OPERATED THIS EQUIPMENT, AND STATE PREVIOUS AIR POLLUTION CONTROL DISTRICT PERMIT NUMBER.

NAME — PREVIOUS PERMIT NUMBER

6. PERMIT APPLICATION REASON:
16
- NEW CONSTRUCTION [ ] 1
- ALTERATION [X] 2
- CHANGE OF LOCATION [ ] 3
- CHANGE OF OWNERSHIP [ ] 4

7. TYPE OF ORGANIZATION:
17
- CORPORATION [X] 1
- PARTNERSHIP [ ] 2
- INDIVIDUAL OWNER [ ] 3
- GOV'T. AGENCY [ ] 4

8. ESTIMATED COST OF EQUIPMENT OR ALTERATION:
AIR POLLUTION CONTROL EQUIPMENT $ 10,000
BASIC EQUIPMENT $ 30,000

9. FOR THE NEW CONSTRUCTION, ALTERATION, TRANSFER OF OWNERSHIP OR LOCATION, WHAT IS THE
ESTIMATED STARTING DATE? 6/1/72 ESTIMATED COMPLETION DATE? 9/1/72

10. GENERAL NATURE OF BUSINESS:
Research Laboratory

TORRANCE
SS-0005124

11. SIGNATURE OF RESPONSIBLE MEMBER OF ORGANIZATION:
→ [signature]

13. OFFICIAL TITLE OF SIGNER:
Supervisor Administrative Services

12. TYPED OR PRINTED NAME OF SIGNER:
A. H. Anderegg

14. DATE:
June 15, 1972

15. PHONE NUMBER:
323-3030

ST. LIST NO. 2-6 | I.D. NO.: 7-14 | ALPHA LIST: 71-78 | TS NO.: 79-80 | CLASS: I [ ] II [ ] III [ ] 18

ASSIGNMENT: 19-20 | WORK UNITS: 21-23 | APPLICATION NO.: 31-36 | EQUIP. CAT. NO.: 38-42 | TYPE: 46 B OR C

COPY

DO NOT REMOVE CARBONS OR SEPARATE
Three white copies must be submitted.
Yellow copy should be retained by applicant.

AIR POLLUTION CONTROL DISTRICT · COUNTY OF LOS ANGELES
434 SOUTH SAN PEDRO STREET, LOS ANGELES, CALIF. 90013 MADISON 9-4711

APPLICATION FOR AUTHORITY TO CONSTRUCT AND PERMIT TO OPERATE

APPLICATION INSTRUCTIONS

A. USE ONE APPLICATION FORM 400-A FOR EACH PERMIT UNIT OF BASIC EQUIPMENT AND ONE APPLICATION FORM 400-A FOR EACH PERMIT UNIT OF AIR POLLUTION CONTROL EQUIPMENT. CALL MA 9-4711, EXT. 66165 FOR ASSISTANCE.

B. A $40 FILING FEE MUST ACCOMPANY EACH APPLICATION. (A $10 FILING FEE WILL BE ACCEPTED FOR A CHANGE OF OWNERSHIP APPLICATION WHERE NO ALTERATION, ADDITION OR CHANGE OF LOCATION HAS OCCURRED.) THE TOTAL PERMIT FEE, WHICH MAY EXCEED THE $40 FILING FEE, MUST BE PAID BEFORE PERMIT TO OPERATE CAN BE GRANTED. MAKE CHECK OR MONEY ORDER PAYABLE TO: AIR POLLUTION CONTROL DISTRICT, COUNTY OF LOS ANGELES.

C. EACH APPLICATION MUST BE FILLED OUT COMPLETELY AND FILED IN TRIPLICATE. ACCOMPANYING PLANS MUST BE IN DUPLICATE.

D. EACH APPLICATION MUST BE SIGNED BY A RESPONSIBLE MEMBER OF THE ORGANIZATION THAT IS TO OPERATE THE EQUIPMENT.

INCOMPLETE APPLICATIONS NOT ACCEPTABLE

1A. PERMIT TO BE ISSUED TO:
SHELL CHEMICAL COMPANY, A DIVISION OF SHELL OIL COMPANY
BUSINESS LICENSE NAME OF ORGANIZATION THAT IS TO RECEIVE PERMIT

1B.
NAME (OR NAMES) OF OWNER OR PRINCIPAL PARTNERS DOING BUSINESS AS (dba) ABOVE ORGANIZATION

2A. MAILING ADDRESS:
P. O. Box 211 — NUMBER STREET
Torrance — CITY OR COMMUNITY
California — STATE
2B. 90509 — ZIP CODE

3A. EQUIPMENT LOCATION ADDRESS:
19821 S. Hamilton St. — NUMBER STREET
Los Angeles — CITY OR COMMUNITY
ZIP CODE
3B. Torrance Blvd. — NEAREST INTERSECTING STREET

4. EQUIPMENT DESCRIPTION.
APPLICATION IS HEREBY MADE FOR AUTHORITY TO CONSTRUCT AND PERMIT TO OPERATE THE FOLLOWING EQUIPMENT:

Vent Relief, and Flare System - to supersede "Gas Recovery and Flare System" and "Vapor Disposal System" discharging to boilers F-502, 3, 5.

Note: V-20R and V-21R covered in alterations A-64790 and A-64791 will now vent to this new system.

5. IF THIS EQUIPMENT HAD A PREVIOUS WRITTEN PERMIT, STATE NAME OF CORPORATION, COMPANY, OR INDIVIDUAL OWNER THAT OPERATED THIS EQUIPMENT, AND STATE PREVIOUS AIR POLLUTION CONTROL DISTRICT PERMIT NUMBER.
Shell — NAME
P-41389 — PREVIOUS PERMIT NUMBER

6. PERMIT APPLICATION REASON:
16
- NEW CONSTRUCTION [ ] 1
- ALTERATION [X] 2
- CHANGE OF LOCATION [ ] 3
- CHANGE OF OWNERSHIP [ ] 4

7. TYPE OF ORGANIZATION:
17
- CORPORATION [X] 1
- PARTNERSHIP [ ] 2
- INDIVIDUAL OWNER [ ] 3
- GOV'T. AGENCY [ ] 4

8. ESTIMATED COST OF EQUIPMENT OR ALTERATION:
AIR POLLUTION CONTROL EQUIPMENT $ 20,000
BASIC EQUIPMENT $ 20,000

9. FOR THE NEW CONSTRUCTION, ALTERATION, TRANSFER OF OWNERSHIP OR LOCATION, WHAT IS THE
ESTIMATED STARTING DATE? 6/1/72 ESTIMATED COMPLETION DATE? 9/1/72

10. GENERAL NATURE OF BUSINESS:
Research Laboratory
TORRANCE
SS-0005125

11. SIGNATURE OF RESPONSIBLE MEMBER OF ORGANIZATION:
[signature]

13. OFFICIAL TITLE OF SIGNER:
Supervisor Administrative Services

12. TYPED OR PRINTED NAME OF SIGNER:
A. H. Anderegg

14. DATE: June 15, 1972

15. PHONE NUMBER: 323-3030

USE ONLY

ST. LIST NO. 3-6	I.D. NO.: 7-14	ALPHA LIST: 71-78	TS NO.: 79-80	CLASS: I [ ] II [ ] III [ ] 18
ASSIGNMENT: 19-20	WORK UNITS: 21-24	APPLICATION NO.: 31-36	EQUIP. CAT. NO.: 38-45	TYPE: 46
UNIT	ENGR.	A/C	P/C	S OR C
VALIDATION 25-29 (III)				

DO NOT REMOVE CARBONS OR SEPARATE
Three white copies must be submitted.
Yellow copy should be retained by applicant.

AIR POLLUTION CONTROL DISTRICT - COUNTY OF LOS ANGELES
434 SOUTH SAN PEDRO STREET, LOS ANGELES, CALIF. 90013 MADISON 9-4711

APPLICATION FOR AUTHORITY TO CONSTRUCT AND PERMIT TO OPERATE

APPLICATION INSTRUCTIONS

A. USE ONE APPLICATION FORM 400-A FOR EACH PERMIT UNIT OF BASIC EQUIPMENT AND ONE APPLICATION FORM 400-A FOR EACH PERMIT UNIT OF AIR POLLUTION CONTROL EQUIPMENT. CALL MA 9-4711, EXT. 66165 FOR ASSISTANCE.

B. A $40 FILING FEE MUST ACCOMPANY EACH APPLICATION. (A $10 FILING FEE WILL BE ACCEPTED FOR A CHANGE OF OWNERSHIP APPLICATION WHERE NO ALTERATION, ADDITION OR CHANGE OF LOCATION HAS OCCURRED.) THE TOTAL PERMIT FEE, WHICH MAY EXCEED THE $40 FILING FEE, MUST BE PAID BEFORE PERMIT TO OPERATE CAN BE GRANTED. MAKE CHECK OR MONEY ORDER PAYABLE TO: AIR POLLUTION CONTROL DISTRICT, COUNTY OF LOS ANGELES.

C. EACH APPLICATION MUST BE FILLED OUT COMPLETELY AND FILED IN TRIPLICATE. ACCOMPANYING PLANS MUST BE IN DUPLICATE.

D. EACH APPLICATION MUST BE SIGNED BY A RESPONSIBLE MEMBER OF THE ORGANIZATION THAT IS TO OPERATE THE EQUIPMENT.

INCOMPLETE APPLICATIONS NOT ACCEPTABLE

1A. PERMIT TO BE ISSUED TO:
SHELL CHEMICAL COMPANY, A DIVISION OF SHELL OIL COMPANY
BUSINESS LICENSE NAME OF ORGANIZATION THAT IS TO RECEIVE PERMIT

1B.
NAME (OR NAMES) OF OWNER OR PRINCIPAL PARTNERS DOING BUSINESS AS (dba) ABOVE ORGANIZATION

2A. MAILING ADDRESS:
P. O. BOX 211 — Torrance — California
NUMBER STREET CITY OR COMMUNITY STATE

2B. 90509
ZIP CODE

3A. EQUIPMENT LOCATION ADDRESS:
19821 S. Hamilton St. — Los Angeles
NUMBER STREET CITY OR COMMUNITY ZIP CODE

3B. Torrance Blvd.
NEAREST INTERSECTING STREET

4. EQUIPMENT DESCRIPTION.
APPLICATION IS HEREBY MADE FOR AUTHORITY TO CONSTRUCT AND PERMIT TO OPERATE THE FOLLOWING EQUIPMENT:

Tie in of vents from solvent storage vessels, V-123R, V-124R and V-125R, to new vent, relief, and flare system.

5. IF THIS EQUIPMENT HAD A PREVIOUS WRITTEN PERMIT, STATE NAME OF CORPORATION, COMPANY, OR INDIVIDUAL OWNER THAT OPERATED THIS EQUIPMENT, AND STATE PREVIOUS AIR POLLUTION CONTROL DISTRICT PERMIT NUMBER.
Refer to Shell Chem. applications nos. A-62973, A-62974, A-62975 and A-62976
NAME PREVIOUS PERMIT NUMBER

6. PERMIT APPLICATION REASON:
16 NEW CONSTRUCTION [ ] 1
ALTERATION [X] 2
CHANGE OF LOCATION [ ] 3
CHANGE OF OWNERSHIP [ ] 4

7. TYPE OF ORGANIZATION:
17 CORPORATION [X] 1
PARTNERSHIP [ ] 2
INDIVIDUAL OWNER [ ] 3
GOV'T. AGENCY [ ] 4

8. ESTIMATED COST OF EQUIPMENT OR ALTERATION:
AIR POLLUTION CONTROL EQUIPMENT $ --
BASIC EQUIPMENT $ --

9. FOR THE NEW CONSTRUCTION, ALTERATION, TRANSFER OF OWNERSHIP OR LOCATION, WHAT IS THE ESTIMATED STARTING DATE? 6/1/72 ESTIMATED COMPLETION DATE? 9/1/72

10. GENERAL NATURE OF BUSINESS:
Research Laboratory
TORRANCE
SS-0005126

11. SIGNATURE OF RESPONSIBLE MEMBER OF ORGANIZATION:
→ [signature]

13. OFFICIAL TITLE OF SIGNER:
Supervisor Administrative Services

12. TYPED OR PRINTED NAME OF SIGNER:
A. H. Anderegg

14. DATE: June 15, 1972

15. PHONE NUMBER: 323-3030

USE ONLY

ST. LIST NO. 2-6	I.D. NO.: 7-14	ALPHA LIST: 71-78	TS NO.: 79-80	CLASS: 18 I [ ] 1 III [ ] 3
ASSIGNMENT: 19-20 UNIT ENGR.	WORK UNITS: 21-24 A/C P/O	APPLICATION NO.: 31-36	EQUIP. CAT. NO.: 38-45	TYPE: 46 B OR C

VALIDATION 25-29 (III)

249

SHELL CHEMICAL COMPANY

A DIVISION OF SHELL OIL COMPANY
P. O. BOX 211
TORRANCE, CALIFORNIA 90509

TELEPHONE 323-3030
321-2340

POLYMERS DIVISION
TORRANCE PLANT

July 18, 1972

Air Pollution Control District
County of Los Angeles
434 South San Pedro Street
Los Angeles, California 90013

Attention Mr. Robert C. Murray

Gentlemen:

With termination of plant operations here we request the cancellation of certain Permits to Operate and the removal and destruction of supporting data from your files. We have placed our Permits into three categories in accordance with our current planning. First, those Permits which can be cancelled August 1. Second, those Permits covering equipment which will be active until September, and which can be cancelled October 1. Third, those Permits covering equipment which will be used by the Elastomers Technical Center (ETC) which will remain active on the site until 1975. Permit lists are attached.

Please direct any questions concerning Plant activities to Mr. L. R. Donkle. ETC liaison with APCD will be handled by Mr. L. E. Hanstedt.

Yours very truly,

ORIGINAL SIGNED BY E. S. MARTIN

E. S. Martin
Plant Manager

LRD:pd

Attachments

bc: w/attachments
T. L. Keelen ← Copy For

SHELL CHEMICAL COMPANY
Elastomers Technical Center
RECEIVED
JUL 24 1972
TLK JGB RHM AHA KRA JTB JWC DWF WRH JC
To be handled by
Date completed
File

Ltr w/attach

TORRANCE
SS-0005063

SHELL CHEMICAL COMPANY
TORRANCE PLANT

APCD PERMITS TO BE CANCELLED
AUGUST 1, 1972

TORRANCE
SS-0005064

ENFORCEMENT INSPECTION

APPLN NO	PERMIT NO	DATE	PERMIT COVERAGE
Butadiene No. 1			
2684	2721	3/21/51	Feed preparation acetone unit for butane removal (150 Area)
21859	27152	11/5/56	150 Area - Acetonitrile extraction unit alteration
13846	27603	11/15/56	Butane pump J-151
22481	35441	5/8/57	Pump P-157
26466	38657	8/2/57	Pumps P-153A and P-154B
25827	43387	5/5/58	Pump P-151A
23730	43570	8/14/58	Pump P-153
A-550	A-3306*	9/12/58	Feed preparation acetonitrile unit - 150 Area
A-2927	A-3501	10/8/58	Pump P-160A
A-5274	A-5649	6/25/59	Alteration - Adds vessel V-164 to 150 Area
A-21287	P-4173	8/12/64	Alteration - Adds storage tank T-120 to 150 Area
A-21286	P-4425	8/25/64	Alteration - Adds pump P-166 to 150 Area
Butadiene No. 2			
2614	2710	3/21/51	Superheater F-201A
2614	2713	3/21/51	Superheater F-201B
2610	2715	3/21/51	Butylene heater F-202A
2610	2716	3/21/51	Butylene heater F-202B
2685	2722	3/21/51	Catalytic dehydrogenation unit for butadiene production 200 Area
21859	27154	11/5/56	Adds butylene lean oil exchangers E-201C and E-201D, alters superheaters F-201A and F-201B
A-1106	A-1915	4/30/58	Adds four fuel gas burners to F-201A
A-1106	A-1916	4/30/58	Adds four fuel gas burners to F-201B
A-11632	A-11225*	9/7/61	Adds knockout drums V-206 and V-207 to 200 Area

* Latest area description

Butadiene No. 3

2689	2725	3/21/51	Catalytic dehydrogenation unit (300 Area)
4074	4784	4/2/52	Compressor K-303E
4074	4788	4/2/52	Compressor K-303F
13844	17049	9/28/55	Pump P-307A
13848	17201	9/28/55	Pump P-309
21859	27155	11/5/56	Expansion - essentially compressor K-303G
21852	33147	3/20/57	Mechanical Seal P-301
21812	33149	3/20/57	Mechanical Seal P-308
22841	35442	5/8/57	Mechanical Seal P-306
25827	43388	5/5/58	Mechanical Seals P-306A, P-307, P-308A
A-1424	A-4713*	2/18/59	Adds propylene compressor K-413
A-7784	A-9805	1/27/61	Adds pumps
A-14100	A-13657	7/25/62	Adds filter-coalescer S-301

Butadiene No. 4

2683	2717	3/21/51	Solvent purification unit (475 Area)
2683	2718	3/21/51	Solvent make-up unit (400 Area)
2683	2719	3/21/51	Butadiene extraction unit (400 Area)
2683	2720	3/21/51	Butane purification unit (490 Area)
21859	27157	11/5/56	Expansion of 400 Area
21812	33150	3/20/57	Mechanical Seal P-419
22841	35443	5/8/57	Mechanical Seal P-401
27308	36703	6/10/57	Pump P-434
25827	43389	5/5/58	Mechanical Seals P-401A, P-419A
23730	43571	8/14/58	Mechanical Seals P-411, P-463, P-490, P-491, P-493
A-3016	A-2120	5/15/58	Removes V-483A, adds P-485, P-487
A-1583 A-3194	A-3624	10/22/58	Adds exchanger E-401A and carbon towers V-465 and V-466

* Latest area description

A-5836	A-5938	8/11/59	Adds pump P-466 and vessel V-431
A-41330	P-28964*	1/31/69	Adds carbon towers V-474A and V-474B

Butadiene No. 5

2436	2132	10/26/50	Boiler F-501
2436	2133	10/26/50	Boiler F-502
2436	2134	10/26/50	Boiler F-503
2436	2135	10/21/50	Boiler F-504
2436	2136	10/26/50	Boiler F-505
2436	2137	10/26/50	Boiler F-506
2436	2138	10/26/50	Boiler F-507
2436	2139	10/26/50	Boiler F-508
7520	10278	2/16/54	Boiler F-509
7520	10279	2/16/54	Boiler F-510
A-7820	A-9207	11/10/60	Boiler F-511
2612	2714	3/21/51	Inert gas generator
T-326 T-327	10971	5/3/54	Vapor control system tanks T-140 and T-141
T-326	10978	5/4/54	Tank T-140
T-327	10979	5/4/54	Tank T-141
23342	36522	5/31/57	Vapor disposal to boilers (adds Research Pilot Plant)
A-1218	A-3839	11/7/58	Vapor disposal to boilers (adds Research Pilot Plant)
A-12684	A-12722	4/18/62	Vapor disposal to boilers (adds Research Pilot Plant)
A-8035	A-7784	6/2/60	Slop oil storage V-702 and V-708

Butadiene No. 7

2688	2723	3/21/51	6,000 barrel spheres V-602 to V-615, inclusive
2688	2724	3/21/51	34,000 gallon propane vessels V-646 and V-648
13847	17050	9/28/55	Mechanical Seal P-605

* Latest area description

TORRANCE
SS-0005067

21859	27158	11/5/56	Adds P-610, P-611, P-636, P-636A
21812	33204	3/20/57	Mechanical Seal P-612
21812	33205	3/20/57	Mechanical Seal P-618
22841	35445	5/8/57	Mechanical Seal P-602
25247	38591	8/2/57	Mechanical Seal P-617
25827	43390	5/5/58	Mechanical Seal P-613
29219	43410	5/12/58	Mechanical Seal P-603
29219	43411	5/12/58	Mechanical Seal P-604
23730	43572	8/14/58	Mechanical Seal P-606
A-346	A-41	9/13/57	Mechanical Seal P-607
A-7794	A-9452	12/12/60	6,000 barrel sphere V-621
A-7875	A-9969	2/17/61	6,000 barrel sphere V-622
A-7876	A-9970	2/17/61	6,000 barrel sphere V-623
28110	42147	11/15/57	Inhibitor drum V-652
A-19791	P-4947	9/21/64	Butadiene loading racks 1 through 5 and pumps P-604 and P-605
A-19791	P-4948	9/21/64	Butadiene loading rack No. 6 and pumps P-604 and P-605
A-19791	P-4949	9/21/64	Butadiene loading rack No. 7 and pumps P-604 and P-605

Butadiene No. 8

18990	36398	5/31/57	Light hydrocarbon riser pilot plant (Research)
21363	35838	5/23/57	Emulsion polymerization pilot plant (Research)
A-698	A-4027	11/25/58	Adds 500 gallon reactor R-7R to emulsion polymerization pilot plant (Research)
A-5755	A-6710	12/14/59	Revisions to emulsion polymerization pilot plant (Research)
A-6032	A-7314	3/23/60	Latex reaction and stripping (Research)
A-14665	A-15240	2/8/63	E-59 vent condenser for R-7R (Research)
A-20413	P-4171	8/12/64	Adds reactor R-11R to emulsion polymerization pilot plant (Research)

A-3651	A-4809	3/3/59	Polystyrene pilot plant (Research)
A-10935	A-10801	6/23/61	Carbon black masterbatch pilot plant (Research)
A-12108	A-12798	4/26/62	Alters carbon black masterbatch pilot plant (Research)
2711	2727	3/21/51	Catalytic dehydrogenation pilot plant (Plant)
3193	3663	9/28/51	Tube bundle furnace F-580
A-8654	A-10474	4/26/61	Afterburner F-582
A-9211	A-10475	4/26/61	Catalyst regenerator F-581

ENFORCEMENT INSPECTION

APPLN NO	PERMIT NO	DATE	PERMIT COVERAGE
Copolymer No. 1			
13104	15987	7/15/55	Butadiene storage 3500, 4500, 5500 Areas
13104	15988	5/15/55	Styrene storage 3500, 4500, 5500 Areas
13104	15989	7/15/55	Modifier storage 4500 Area
13104	15991	7/15/55	Caustic wash systems 3500, 4500, 5500 Areas
13104	15992	7/15/55	Miscellaneous storage 3400 and 4500 Areas
27309	40501	8/29/57	Dresinate tank T-3516
A-11386	A-12719	4/18/62	SDD tank T-4504
A-58685	P-41653	1/8/71	Caustic wash system 4500 Area
13363	16001	7/15/55	Oil emulsion storage T-3038
13598	16097	7/20/55	Oil tank T-3504
13598	16098	7/20/55	Oil tank T-3506
26763	41212	10/15/57	Oil emulsion facilities
26763	41213	10/15/57	Oil emulsion tank T-3038
26763	41214	10/15/57	Oil tank T-3504
26763	41215	10/15/57	Oil tank T-3505
26763	41216	10/15/57	Oil tank T-3512
A-6485	A-6914	1/7/60	Added oil emulsion facilities
A-8324	A-9123	11/1/60	Added oil emulsion facilities
Copolymer No. 2			
13361	15999	7/15/55	Rubber incinerator
13174	15996	7/15/55	Flare system
13364	21173	4/11/56	Flare system alteration
A-5199	A-5490	6/10/59	Flare system alteration
A-6102	A-6313	10/14/59	Flare system alteration

A-8477	A-8710	9/7/60	Flare system alteration
A-7874	A-9312	11/22/60	Flare system alteration
A-8848	A-10374	4/13/61	Flare system alteration
A-10764	A-10516	5/2/61	Flare system alteration
A-11572	A-13027	5/22/62	Flare system alteration
A-14393	A-13896	9/12/62	Flare system alteration
A-20416	P-5552	10/22/64	Flare system alteration
A-21717	P-13144	4/13/66	Flare system alteration
A-27199	P-18145	12/14/66	Flare system alteration
A-34470 A-37976	P-26233	6/14/68	Flare system alteration
A-54780 A-56544	P-38017	4/27/70	Flare system alteration
A-61890	P-48105*	1/4/72	Flare system alteration

Copolymer No. 3

13118	15994	7/15/55	Butadiene and styrene recovery system, 3200 Area
A-7692	A-7538	4/26/60	Alters above
13119	16093	7/20/55	JK reactor system 3300 Area
13119	16094	7/20/55	LM reactor system 3300 Area
13119	16095	7/20/55	Auxiliaries 3300 Area
25119	32335	3/1/57	Paint latex
A-781	A-919	1/15/58	Alters above
A-8380	A-8709	9/7/60	Alters JK reactor system
A-11571	A-13145	6/4/62	Polyisoprene latex
A-15069 A-15070 A-15296 A-16011	A-15335	2/18/63	Alters above
A-21264 A-21509	P-6061	11/19/64	Alters above
13175	15998	7/15/55	Pigment preparation, 3400 Area

* Latest area description

A-11432	A-12873	5/4/62	Alters above

Copolymer No. 4

13118	15993	7/15/55	Butadiene and styrene recovery system 4200 Area
13118	15995	7/15/55	Batch recovery
22321	30646	2/6/57	Alters permit No. 15993
A-5430	A-5846	7/29/59	Alters permit No. 15995
A-6286	A-6486	11/12/59	Alters permit No. 15993
A-7012	A-7051	2/8/60	Alters permit No. 15993
A-7715	A-7539	4/26/60	Alters permit No. 15993
A-43123	P-32629	5/12/69	Alters permit No. 15993
13119	16090	7/20/55	EF reactor system 4300 Area
13119	16091	7/20/55	JK reactor system 4300 Area
13119	16092	7/20/55	Auxiliaries 4300 Area
13843	21174	4/11/56	Butadiene pump P-4346
13843	21175	4/11/56	Butadiene pump P-4304
22592	36704	6/10/57	Modifier pumps P-4370, P-4371
13175	15997	7/15/55	Pigment preparation 4400 Area
13598	16096	7/20/55	Miscellaneous storage 4400 Area
A-11431	A-12872	5/4/62	Alters permit No. 15997

Copolymer No. 5

18991	32738	3/18/57	Original permit S-2105 latex manufacture 5200, 5300, 5400 Areas
18991	32970	3/18/57	Tank T-5235
18991	32971	3/18/57	Tank T-5236
18991	32972	3/18/57	Tank T-5237
18991	32973	3/18/57	Tank T-5238
18991	32974	3/18/57	Tank T-5239
A-8559	A-8922	10/5/60	Tank T-5241
A-8560	A-8923	10/5/60	Alters permit No. 32738

TORRANCE
SS-0005072

A-20417	P-4434	8/25/64	Tank T-5242
A-56545	P-37105*	4/2/70	Adds flash vessel V-5233
18991	32975	3/18/57	Tank T-5331
A-6285	A-6474	11/9/59	Alters permit No. 32738
A-20415	P-4433	8/25/64	Alters permit No. 32738
A-31256	P-13579*	4/20/66	Alters permit No. 32738
18991	32961	3/18/57	Latex loading rack
A-11571	A-13148	6/4/62	Alters permit No. 32961

Copolymer No. 6

13104	15990	7/15/55	Latex storage 3000 Area
13117	16222	7/26/55	JK rubber finishing lines 3000 Area
13117	16224	7/26/55	Pangborn Dusting Machine
A-9839	A-10410	4/19/61	Oil emulsion tank T-3037, Pump P-3023
13117	16221	7/26/55	Dust collection system 3000 Area
13117	16223	7/26/55	LM Rubber finishing lines 3000 Area
13117	16225	3/26/55	Slurry system and bale dryer 3000 Area
13117	16226	7/26/55	Dust collection system 4000 Area
A-12348	A-14674	11/26/62	S-3018 dewatering screw press
A-31257	P-13336	4/5/66	S-3021 dewatering screw press
A-3092	A-3425	9/30/58	Mold release spray system 3000 Area
13117	16215	7/26/55	EF rubber finishing lines 4000 Area
13117	16217	7/26/55	Dusting machine E line
13117	16218	7/26/55	Dusting machine F line
A-7716	A-8117	7/19/60	Alum facilities 4000 Area
A-18938	P-8188	4/7/65	EF dewatering screw presses S-4020, S-4021
13117	16216	7/26/55	GH rubber finishing lines 4000 Area
13117	16219	7/26/55	Dusting machine G line
13117	16220	7/26/55	Dusting machine H line
A-3092	A-11242	9/30/58	Mold release spray system 4000 Area

* Latest area description

A-11127	A-3426	9/30/58	Mold release spray system 4000 Area
14110	16410	8/11/55	Latex blend tank T-5017
14110	16411	8/11/55	Latex blend tank T-5016
14110	16412	8/11/55	Latex blend tank T-5015
14110	16413	8/11/55	Latex blend tank T-5014
14110	16414	8/11/55	Antioxidant tank T-5023

Copolymer No. 7

13103	15986	7/15/55	Inert gas system
13362	16000	7/15/55	Carbon black slurry system
A-4586	A-5072	4/14/59	Carbon black conveyor system
A-4586	A-5073	4/14/59	Carbon black slurry system
A-4586	A-5074	4/14/59	Bin vent filter
A-7076	A-8358	8/5/60	Carbon black reconveyor
A-7920	A-8359	8/5/60	Carbon black disperser A2-3033
26733	41226	10/17/57	Antioxidant BLE-25 system
A-8336	A-10334	4/7/61	Alters above
A-43122	P-33193	7/2/69	Ajone and flexzone antioxidant system
28112	43298	4/9/58	Laboratory latex pilot plant
A-2185	A-3142	8/21/58	Refrigeration system
A-4987	A-4673	2/11/59	Plate coil cleaning facilities
A-4987	A-4674	2/11/59	Tubular exchanger cleaning facilities
A-7293	A-7233	3/10/60	Plate coil cleaning facilities
A-7011	A-7315	3/23/60	Tubular exchanger cleaning facilities
A-62022	P-48642	2/24/72	Waste latex coagulation

TORRANCE
SS-0005074

ENFORCEMENT INSPECTION

APPLN NO	PERMIT NO	DATE	PERMIT COVERAGE
Styrene No. 1			
14626	17793	11/1/55	2300 Area propane cracking
14626	17817	11/1/55	1300 Area propane cracking
16806 21362 22566	41765	10/25/57	2000 Area ethylene purification
As Above	41766	10/25/57	Vessel V-2019A
As Above	41767	10/25/57	Vessel V-2019B
As Above	41768	10/25/57	Vessel V-2019C
14626	43920	10/4/60	Furnace F-1301B
14626	43921	10/4/60	Furnace F-1302A
14626	43922	10/4/60	Furnace F-1302B
14626	43923	10/4/60	Furnace F-2301B
14626	43924	10/4/60	Furnace F-2302A
A-575	A-1672	4/10/58	Alters 1300 Area propane cracking
A-575	A-1673	4/10/58	Alters 2300 Area propane cracking
A-4000	A-4087	12/2/58	Ammonia reflux pump P-2023
A-1424	A-4712	2/18/59	Butadiene pump P-2021
A-8337	A-8809	9/20/60	CO_2 removal system (2000 Area)
A-7010 A-8073 A-8176	A-8967	10/14/60	Ethylene production expansion
A-9498	A-10842	6/28/61	2300 Area quench water revisions
A-9569	A-10843	6/28/61	Furnace F-2303
A-9455	A-11120	8/17/61	Ethylene production expansion
A-16051	A-15337	2/18/63	Propane-Propylene transfer pump P-2032

A-18102	P-2271	3/27/64	Exchangers E-2015E and E-2034
A-39481 A-39671	P-29535	3/10/69	Pump P-2018, exchanger E-2010
A-56093	P-41165*	12/14/70	Quench water revisions

Styrene No. 2

15578	19510	1/24/56	Ethylbenzene Unit 1200 Area
15578	19510	3/20/68	Scrubber C-1207
15578	19511	1/24/56	Ethylbenzene Unit 2200 Area
15578	19511	3/20/68	Scrubber C-2207
A-283	A-1393	3/10/58	Adds E-1268
A-283	A-1394	3/10/58	Adds E-2268
A-5212	A-5075	4/14/59	Adds E-1269 A and B
A-5212	A-5076	4/14/59	Adds E-2269 A and B
A-8175	A-8116	7/19/60	Adds E-1270, E-1271, V-1249
A-7956	A-8439	8/11/60	Complex-oil separation system 1200 Area
A-9918 A-10430	A-10581	5/12/61	Major alteration 1200 Area
A-10277 A-10431	A-10582	5/12/61	Major alteration 2200 Area
A-18100	P-2269	3/27/64	Enlarge E-1254
A-18101	P-2270	3/27/64	Enlarge E-2254
A-15134	P-2272	3/27/64	V-1227, V-1250
A-15177	P-2273	3/27/64	V-2227, V-2250
A-39668 A-45648	P-25195	4/5/68	Alteration C-1205
A-39669 A-45649	P-25196	4/5/68	Alteration C-2205
A-50064	P-33247*	7/2/69	Adds V-1229
A-50065	P-33248*	7/2/69	Adds V-2229
A-3093	A-5023	4/6/59	Styrene Plant flare system

* Latest area description

A-8104 A-8507	A-8661	9/1/60	Adds flare connections
A-9454	A-10984	7/25/61	Adds flare connections
A-16052	A-15241	2/8/63	Adds flare connections
A-10549	A-10114	3/13/61	Sand handling system

Styrene No. 3

14626	17781	11/1/55	Ethylbenzene dehydrogenation 2300 Area
14626	17816	11/1/55	Ethylbenzene dehydrogenation 1300 Area
28109	41699	10/28/57	Alter 2300 Area ethylbenzene dehydrogenation
28109	41700	10/28/57	Alter 1300 Area ethylbenzene dehydrogenation
A-3999	A-5973	8/18/59	Alter 1300 Area ethylbenzene dehydrogenation
A-3999	A-5974	8/18/59	Alter 2300 Area ethylbenzene dehydrogenation
A-7783	A-7608	5/2/60	EB dehydro vent gas recovery system
A-8071	A-8920	10/5/60	Adds K-1381D
A-8072	A-8921	10/5/60	Adds K-2381D
A-9417	A-10839	6/28/61	Alters EB dehydro 1300 Area
A-9417	A-10840	6/28/61	F-1301B steam superheater
A-41115	P-24637	2/20/68	Alters vent gas recovery system
A-39670	P-24941*	3/15/68	EB dehydro 1300 Area
A-39672	P-24942*	3/15/68	EB dehydro 2300 Area
A-63609	P-48409*	1/13/72	Alters vent gas recovery system
14112	17469	10/21/55	Styrene finishing 2400 Area
14112	17813	10/21/55	Styrene finishing 1400 Area
20205	30644	2/6/57	Styrene finishing 1400 Area alteration
20205	30645	2/6/57	Styrene finishing 2400 Area alteration
A-1773	A-1537	3/28/58	Alters styrene finishing 2400 Area
A-15192	A-14256	10/19/62	Adds V-1468
A-15197	A-14258	10/19/62	Alters styrene finishing 1400 Area

* *Latest area description*

A-15198	A-14259	10/19/62	Alters styrene finishing 2400 Area
A-16863	P-124	8/16/63	Alters styrene finishing 2400 Area
A-44218	P-26265*	6/14/68	Alters styrene finishing 2400 Area
A-34471	P-26600*	7/8/68	Alters styrene finishing 1400 Area
A-34471	P-27142	8/8/68	Storage tank T-1425
A-34471	P-27143	8/8/68	Storage tank T-1426
14112	17812	10/31/55	Benzene finishing facilities 1400 Area
14112	17814	10/31/55	Tar processing system 1400 Area

Styrene No. 4

15715	27159	11/5/56	Tank T-1036A
15715	27161	11/5/56	Tank T-1036B
16805	27892	11/23/56	Boiler F-1013
16805	27897	11/23/56	Boiler F-1001
16805	27898	11/23/56	Boiler F-1002
26579	42573	12/9/57	Scrubber C-1001
A-15133	A-15336	2/18/63	Knockout V-1249 and pump P-1268
A-50063	P-33245	7/2/69	Relocate C-1001
A-9418	A-10841	6/28/61	Boiler F-1014
A-16010	A-15330	2/18/63	Styrene tank car loading rack
A-16010	A-15331	2/18/63	Styrene tank truck loading rack
A-16010	A-15332	2/18/63	Styrene tank truck loading rack
A-16010	A-15333	2/18/63	Toluene tank car loading rack
A-16010	A-15334	2/18/63	Toluene tank car loading rack

Styrene No. 5

15715	27079	11/5/56	Tank T-2522
15715	27080	11/5/56	Tank T-2521
15715	27162	11/5/56	Tank T-2520
15715	27163	11/5/56	Tank T-2525A

* Latest area description

15715	27169	11/5/56	Tank T-2537
15715	27172	11/5/56	Tank T-2523
15715	27173	11/5/56	Tank T-2524
15715	27174	11/5/56	Tank T-2525B
15715	27175	11/5/56	Tank T-2525C
15715	27176	11/5/56	Tank T-2526
15715	27177	11/5/56	Tank T-2528A
15715	27178	11/5/56	Tank T-2528B
15715	27179	11/5/56	Tank T-2528C
15715	27180	11/5/56	Tank T-2529A
15715	27181	11/5/56	Tank T-2529B
15715	27182	11/5/56	Tank T-2529C
15715	27183	11/5/56	Tank T-2530
15715	27184	11/5/56	Tank T-2532
15715	27185	11/5/56	Tank T-2531
15715	27186	11/5/56	Tank T-2534A
15715	27188	11/5/56	Tank T-2534B
15715	27189	11/5/56	Tank T-2534C
15715	27190	11/5/56	Tank T-2534D
A-2500	A-2942	7/30/58	Pump P-2598
A-39673	P-24511	2/16/68	Tank T-2525A
A-39674	P-24512	2/16/68	Tank T-2525D
A-38909	P-25369	4/9/68	Tank T-2526

Styrene No. 6

A-7873	A-9453	12/12/60	Solvent purification system, 1400 Area
A-10837	A-10556	5/9/61	Alters above
A-14394	A-14011	9/25/62	Alters above
A-27198	P-18925	12/29/66	Alters above
A-54783	P-37200*	3/18/70	Alters above

* Latest area description

A-8718	A-10453	4/24/61	Recycle styrene purification
A-15193	A-14257	10/19/62	Alters above
A-34472	P-26601*	7/8/68	Alters above

* Latest area description

ENFORCEMENT INSPECTION

APPLN NO	PERMIT NO	DATE	PERMIT COVERAGE
Isoprene No. 1			
4051	3756	10/25/51	Acid unit for isobutylene removal 100 Area
20143	26745	10/26/56	Natural gas knockout pot V-135
20143	26746	10/26/56	Natural gas knockout pot V-592
21812	33145	3/20/57	Mechanical seal P-105
22841	35440	5/8/57	Mechanical seal P-114
28111	43122	2/27/58	Mechanical seal P-103
25287	43386	5/5/58	Mechanical seal P-111A, P-115A
29219	43408	5/12/58	Mechanical seal P-106A, P-114A
A-7793	A-9968	2/17/61	Monomer precursor unit 100 Area
A-11227	A-10802	6/23/61	Alters above
A-21288	P-4427*	8/25/64	Alters above
A-21288	P-4428	8/25/64	Acid loading - unloading
Isoprene No. 2 and 3			
See Butadiene Enforcement Inspections Nos. 2 and 3			
Isoprene No. 4			
A-7784	A-9806	1/27/61	Crude isoprene topping and bottoming 100 Area
Isoprene No. 5			
A-7785	A-9807*	1/27/61	Extractive distillation unit 180 Area
A-21286	P-4426	8/25/64	Pump P-166
Isoprene No. 6			
29219	43409	5/15/58	Mechanical seals P-490A, P-491A, P-493A
A-6779	A-6493	11/13/59	Isoprene hydrogenation unit 490 Area
A-7786 A-8639	A-9809*	1/27/61	Isoprene purification unit 490 Area

* Latest area description

Isoprene No. 7

A-5199	A-5489	6/10/59	Isoprene polymerization 3200, 3300, 3500, 4000 Areas
A-5199	A-5488	6/10/59	Polyisoprene feed preparation unit 3500 Area
A-5997	A-7284	3/17/60	Pump P-3514
A-6102	A-6312	10/14/59	Alters permit A-5489
A-7233	A-6673	12/8/59	Alters permit A-5489 and A-6312
A-7648	A-7478	4/14/60	Alters permit A-5488
A-8325 A-8379	A-8618	8/30/60	Alters permit A-5489
A-7917 A-7918	A-9934	2/14/61	Sphere V-3523
A-7917 A-7918	A-9935	2/14/61	Sphere V-3524
A-7917 A-7918	A-9937	2/14/61	Alters permit A-5488
A-6967	A-7183	3/4/60	Alters permit A-5489 Adds 5000 Area dryer
A-6867	A-7184	3/4/60	Dust collection system 5000 Area
A-7919 A-7937 A-8756	A-10164	3/17/61	Polyisoprene plant 3800 and 5000 Areas
A-10759	A-10754	5/11/61	Alters above
A-11382	A-11243	9/13/61	Alters above
A-27197 A-27200	P-18312	1/6/67	Alters above
A-27201	P-18725	1/25/67	Polyisoprene feed preparation 3500 Area
A-54781	P-37104*	4/2/70	Alters above
A-54779 A-54782 A-59055 A-62845	P-43647*	7/19/71	Alters permit P-18312
A-62846	P-43582	5/12/71	Air pollution control system 5000 Area

* Latest area description

SHELL CHEMICAL COMPANY
TORRANCE PLANT

APCD PERMITS TO BE CANCELLED
OCTOBER 1, 1972

ENFORCEMENT INSPECTION

APPLN NO	PERMIT NO	DATE	PERMIT COVERAGE
Butadiene No. 6			
2613	2709	3/21/51	Gas recovery system
2613	3040	3/21/51	Excess gas flare
A-576	A-428	11/13/57	Adds knockout vessel V-653
A-1616	A-3500	10/8/58	Serves carbon towers V-465 and V-466
A-1219	A-3840	11/7/58	Serves research pilot plants
A-1423	A-4589	1/28/59	Serves vessel V-458F
A-5274	A-5650	6/25/59	Serves vessel V-164
A-6421	A-6217	9/28/59	Serves vessel V-431
A-6790	A-6465	11/3/59	Serves hydrogenation reactor V-490
A-5755	A-6718	12/14/59	Serves research reactor
A-8036	A-7733	5/23/60	Serves V-491, V-702, V-708
A-8640	A-9040	10/24/60	Serves V-490B
A-7819	A-9861	2/2/61	Serves plant expansion
A-11367	A-10771	6/15/61	Serves V-177, V-178
A-12107	A-12720	4/18/62	Serves carbon black pilot plant
A-12683	A-12721	4/18/62	Serves research pilot plant
A-19793	P-6027	11/18/64	Serves drum loading facility
A-41702	P-32507	4/28/69	Serves V-474A and B
A-56756 A-57029	P-41389*	1/28/71	Serves research feed purification
Styrene No. 2			
A-3093	A-5023	4/6/59	Styrene flare system
A-8104 A-8507	A-8661	9/1/60	Alters above
A-9454	A-10984	6/25/61	Alters above

* Latest area description

TORRANCE
SS-0005084

A-16052	A-15241	2/8/63	Alters above
Styrene No. 4			
16805	27893	11/23/56	Boiler F-1015
16805	27894	11/23/56	Boiler F-1004
16805	27895	11/23/56	Boiler F-1006
16805	27896	11/23/56	Boiler F-1008
26579	42574	12/9/57	Alters permit No. 27894
26579	42575	12/9/57	Alters permit No. 27895
26579	42576	12/9/57	Alters permit No. 27896
A-10763	A-10555	5/9/61	Boilers fuel gas system
A-8693	A-8138	7/21/60	Styrene effluent system
A-29817	P-20171	5/15/67	Alters above
A-42507	P-32628	5/12/69	Alters above
15715	27164	11/5/56	Tank T-2670
15715	27165	11/5/56	Tank T-2680A
15715	27166	11/5/56	Tank T-2680B
15715	27167	11/5/56	Tank T-2681
15715	27168	11/5/56	Tank T-2682
Styrene No. 5			
15715	27162	11/5/56	Tank T-2520
Copolymer No. 5			
A-29075	P-17351	10/28/66	Continuous compounding facilities 5400 Area
A-29075	P-17352	10/28/66	Dust collector 5400 Area
A-29076	P-17407	10/28/66	Dust collector 5400 Area
A-29077	P-17408	10/28/66	Dust collector 5400 Area

SHELL CHEMICAL COMPANY
TORRANCE PLANT

ACTIVE APCD PERMITS

ENFORCEMENT INSPECTION

APPLN NO	PERMIT NO	DATE	PERMIT COVERAGE
Butadiene No. 8			
A-4189	A-3741	10/30/58	Isoprene polymerization pilot plant
A-6843 A-7009	A-7660	5/9/60	Alters above
A-12682	A-12799	4/21/62	Polyisoprene latex pilot plant
A-21265	P-4435	8/25/64	Adds V-98R to above
A-56755	P-41390	1/28/71	Pilot plant feed purification system
A-57028	P-42364	3/17/71	Solution polymer research unit
A-6855	A-7017	2/2/60	Pilot plant batch distillation unit
2710	2726	3/21/51	Effluent control area
9143	11333	6/1/54	Roof for API separator basin
A-41328	P-29793	3/14/69	Sludge tank T-564
A-41327	P-29841	3/14/69	Floc-aid tank T-563
A-41349	P-29875	3/14/69	Waste water treatment plant
A-56667	P-40612	11/12/70	Storm drain treatment plant
A-56668	P-46242	10/7/71	Process effluent treatment plant

SHELL CHEMICAL COMPANY
A DIVISION OF SHELL OIL COMPANY
P. O. BOX 211
TORRANCE, CALIFORNIA 90509

TELEPHONE 323-3030
321-2340

ELASTOMERS
TECHNICAL CENTER

September 13, 1972

Mr. John D. Parkhurst
Chief Engineer and General Manager
County Sanitation Districts of Los Angeles County
2020 Beverly Boulevard
Los Angeles, California 90087

Dear Mr. Parkhurst:

In your letter of May 23, 1972, your file 5-00.05-00/72, to Mr. E. S. Martin, Plant Manager of Shell Chemical Company, P. O. Box 211, Torrance, you referred in the next-to-last paragraph to "The research laboratory which you plan to construct-----." We wish to clarify a misunderstanding which apparently exists since the laboratory has existed at this location since 1956 and has been commingling its process effluent with that of the Torrance Plant of Shell Chemical Company under City of Los Angeles, Department of Public Works Permit No. W-16933, issued in August 1958.

Further, it had occurred to us that, since the Shell Chemical Plant would cease operation at this location ca September 1, this year (reference Mr. E. S. Martin's letter of May 16, 1972, to you), our research facility might be expected to obtain a new permit by that date. However, on reviewing Section 215 of the April 1, 1972, ordinance(regulating industrial waste water discharges), we have interpreted that a new permit is to be obtained by November 23, 1972, six months after your notification letter of May 23, 1972.

To clarify our understanding, Mr. A. H. Anderegg of this laboratory contacted Mr. Dryden of your office by telephone on August 30. Mr. Dryden agreed with our understanding and requested that we follow up with a confirming letter.

Accordingly, then, we wish to restate our position and understanding regarding this situation:

1. The research laboratory referred to in your letter of May 23, 1972, is not to be constructed but has been in existence since 1956.

2. Since the industrial flow to the Sanitation District from this location has changed due to the shutdown of the

Torrance Plant, our research laboratory (named Elastomers Technical Center) will furnish the information requested in the next-to-last paragraph of your letter of May 23, 1972. Further, we understand that we must apply for and obtain the new Permit for Industrial Waste Water Discharge by November 23, 1972.

Should there be alternate interpretations of this situation, we presume you will contact us soonest. Feel free to call Mr. Anderegg if you have any questions at telephone 323-3030.

Yours very truly,

T. L. Keelen

T. L. Keelen
Director

AHA:ws

bc: Torrance Plant
L. R. Donkle

ETC
T. L. Keelen ← Copy To
L. E. Handstedt
A. H. Anderegg
ETC Files

SHELL CHEMICAL COMPANY
A DIVISION OF SHELL OIL COMPANY
P. O. BOX 211
TORRANCE, CALIFORNIA 90509

TELEPHONE 323-30:
321-23.

POLYMERS DIVISION
TORRANCE PLANT

September 22, 1972

City of Los Angeles
Department of Public Works
Bureau of Sanitation
638 Beacon Street
San Pedro, California 90731

Attention: Joe C. Engesser

Gentlemen:

Confirming discussions of September 22 between our Mr. L. R. Donkle and Inspector C. L. Tripp, we wish to confirm the following:

1. Industrial waste discharge to the Del Amo (James St.) sanitary sewer from 20021 Vermont Avenue has been terminated.

2. Industrial waste discharge to the Normandie trunk sanitary sewer from 19821 South Hamilton Avenue will be terminated by October 15.

3. Industrial waste discharge to the Del Amo sanitary sewer from 19821 South Hamilton Avenue will be terminated by October 15.

34146

16933

Permits covering the above industrial waste connections should be cancelled.

Yours very truly,

ORIGINAL SIGNED BY J. P. RUBY

J. P. Ruby, Manager
Employee Relations

Copy For

LRD:TJ
bc: T. L. Keelen - ETC

TORRANCE
SO-0013747

SHELL CHEMICAL COMPANY
A DIVISION OF SHELL OIL COMPANY
P. O. BOX 211
TORRANCE, CALIFORNIA 90509

TELEPHONE 323-3030
321-2340

POLYMERS DIVISION
TORRANCE PLANT

October 16, 1972

City of Los Angeles
Bureau of Accounting
Room 300, City Hall South
Los Angeles, California 90012

Gentlemen:

Your invoices covering payment of Annual Industrial Waste Disposal Inspection Fees for Permits W-34146 and 16933 are hereby returned without payment.

The industrial plant at the location covered has stopped operation and is in the process of being sold.

Very truly yours,

ORIGINAL SIGNED BY
K. E. NOLAND

K. E. Noland
Treasury Manager

COPY FOR

NKG:TJ
Attachments

10/16

Second notices returned with cc of this letter

11/14

TORRANCE
SO-0013741

FORM 9015 (REV. 8-71)

CITY OF LOS ANGELES
DEPARTMENT OF PUBLIC WORKS

BUREAU OF ACCOUNTING-ROOM 300, CITY HALL SOUTH

INVOICE FOR ANNUAL INDUSTRIAL WASTE DISPOSAL INSPECTION FEE

PERMIT NO.	CLASS	ISSUED MONTH YR.	ONE YEAR PERIOD BEGINNING	DELINQUENT DATE	FEE
W-16933	3	08/58	10/01/72	11/01/72	$ 55.00

An additional charge of 50% of the billed amount shall be imposed if not paid by last day of the month in which the fee is due.

PAY THIS AMOUNT

BUSINESS ADDRESS:

SHELL CHEMICAL CORP
19821 HAMILTON AVE
TORRANCE CA 90247

IF THERE HAS BEEN A CHANGE OF OWNERSHIP INDICATE ON THE BACK HEREOF AND RETURN WITHOUT MAKING PAYMENT

MAKE CHECKS PAYABLE TO
DEPARTMENT OF PUBLIC WORKS
AND MAIL TO
BUREAU OF ACCOUNTING
ROOM 300, CITY HALL SOUTH
111 EAST FIRST STREET
LOS ANGELES, CALIF. 90012

PERMIT NO.	DUE DATE	FEE
W-16933	10/01/72	55.00

SHELL CHEMICAL CORP
19821 HAMILTON AVE
TORRANCE CA 90247

DETACH AND RETURN
THIS STUB WITH YOUR PAYMENT

FORM 9015 (REV. 8-71)

CITY OF LOS ANGELES
DEPARTMENT OF PUBLIC WORKS

BUREAU OF ACCOUNTING-ROOM 300, CITY HALL SOUTH

INVOICE FOR ANNUAL INDUSTRIAL WASTE DISPOSAL INSPECTION FEE

PERMIT NO.	CLASS	ISSUED MONTH YR.	ONE YEAR PERIOD BEGINNING	DELINQUENT DATE	FEE
W-34146	5	08/69	10/01/72	11/01/72	$ 91.00

An additional charge of 50% of the billed amount shall be imposed if not paid by last day of the month in which the fee is due.

PAY THIS AMOUNT

BUSINESS ADDRESS: 19821 S HAMILTON AVE

SHELL CHEM CO DIV SHELL OIL
PO BOX 211
TORRANCE CA 90509

IF THERE HAS BEEN A CHANGE OF OWNERSHIP INDICATE ON THE BACK HEREOF AND RETURN WITHOUT MAKING PAYMENT

MAKE CHECKS PAYABLE TO
DEPARTMENT OF PUBLIC WORKS
AND MAIL TO
BUREAU OF ACCOUNTING
ROOM 300, CITY HALL SOUTH
111 EAST FIRST STREET
LOS ANGELES, CALIF. 90012

PERMIT NO.	DUE DATE	FEE
W-34146	10/01/72	91.00

19821 S HAMILTON AVE

SHELL CHEM CO DIV SHELL C
PO BOX 211
TORRANCE CA 90509

DETACH AND RETURN
THIS STUB WITH YOUR PAYMENT

TORRANCE
SO-0013742

LICENSE COLLECTOR
COUNTY OF LOS ANGELES

FEE . . . . . $_____
PENALTY (if any) _____
TOTAL TO REMIT $_____

APPLICATION FOR BUSINESS LICENSE

KIND OF BUSINESS _____ Tel. No. _____

ADDRESS OF BUSINESS _____
NUMBER STREET CITY ZONE

NEAREST CROSS STREET _____

FULL NAME OF APPLICANT _____
(STATE WHETHER CORPORATION, PARTNERSHIP, INDIVIDUAL OR OTHER STATUS)

DOING BUSINESS AS _____

IF A CORPORATION, EXACT CORPORATE NAME IS _____

Date of Incorporation _____ Incorporated in State of _____

NAMES OF OFFICERS	ADDRESSES	TITLES

Underline Above Officer Authorized To Accept Service of Legal Process.

IF A PARTNERSHIP, SHOW BELOW THE NAMES OF PARTNERS, ADDRESSES, & INTEREST HELD

NAMES OF PARTNERS	ADDRESSES	% INTEREST HELD

MAILING ADDRESS _____
STREET CITY ZONE

DATE BUSINESS STARTED _____

PREVIOUS OWNER'S NAME, (IF KNOWN) _____

THIS IS AN APPLICATION FOR: NEW LICENSE _____ RENEWAL _____

APPLICANT MUST WITHIN FIVE DAYS THEREAFTER NOTIFY THIS OFFICE IN WRITING OF ANY CHANGE IN ANY FACTS REQUIRED BY THIS APPLICATION.

The information contained herein is true and correct to the best of my knowledge and belief. As a condition for the issuance of the license applied for, I agree; to submit any additional information that may be required; to conduct all phases of this business in accordance with regulations established for such business and to maintain all trucks or equipment that may be used in connection therewith, in conformance with all applicable laws, ordinances, and regulations.

Date _____ Applicant's Signature _____

_____

BELOW FOR OFFICE USE ONLY _____

TORRANCE
SO-0013744

Bond _____ Insurance _____ Zoning _____ By _____

INDUSTRIAL WASTE PERMITS

PERMIT NUMBER	DATE ISSUED	ANNUAL FEE	CANCELLATION DATE	FOR
W-16933	8-18-58	~~$10.00~~		Lime Soda-Ash Water Softening - BD Plant
W-16725	8-15-58	~~$10.00~~		Polymerization Catalysis and Lime Soda-Ash Water Softening - Styrene Plant
W-16241	6-26-58	~~$10.00~~		Cooling Water from Extruder and Laboratory Waste - BD Plant
W-13767	3-28-57	~~$10.00~~		Experimental and Production Control Laboratory - Copolymer Plant (19201 S. Vermont)
W-13291	3-28-57	~~$10.00~~		Production Control Laboratory - Copolymer Plant (19208 S. Vermont)
W-13107	10- 9-56	~~$10.00~~		Laboratory Wastes - Styrene Plant

SHELL CHEMICAL COMPANY
A DIVISION OF SHELL OIL COMPANY
P. O. BOX 211
TORRANCE, CALIFORNIA 90509

TELEPHONE 323-3030
321-2340

POLYMERS DIVISION
TORRANCE PLANT

September 22, 1972

City of Los Angeles
Department of Public Works
Bureau of Sanitation
638 Beacon Street
San Pedro, California 90731

Attention: Joe C. Engesser

Gentlemen:

Confirming discussions of September 22 between our Mr. L. R. Donkle and Inspector C. L. Tripp, we wish to confirm the following:

1. Industrial waste discharge to the Del Amo (James St.) sanitary sewer from 20021 Vermont Avenue has been terminated.

2. Industrial waste discharge to the Normandie trunk sanitary sewer from 19821 South Hamilton Avenue will be terminated by October 15.

34146

3. Industrial waste discharge to the Del Amo sanitary sewer from 19821 South Hamilton Avenue will be terminated by October 15.

16933

Permits covering the above industrial waste connections should be cancelled.

Yours very truly,

ORIGINAL SIGNED BY J. P. RUBY

J. P. Ruby, Manager
Employee Relations

Copy For

LRD:TJ
bc: T. L. Keelen - ETC

TORRANCE
SO-0013747

CITY OF LOS ANGELES, DEPARTMENT OF PUBLIC WORKS

Sanitation Sewer Maint. 7-22-69 № 22969

Received of Shell Oil Co the sum of Forty-four Dollars 44 —

(Address 19821 S. Hamilton Ave.) Fees on I.W. Permit Office No. W-34446 B. C. No.

General Fund

DEPARTMENT OF PUBLIC WORKS
City of Los Angeles
By E. Ellington

16-356

TORRANCE
SO-0013752

RETURN IN 5 DAYS TO

BUREAU OF ACCOUNTING

ROOM 300 - CITY HALL SOUTH

LOS ANGELES, CALIFORNIA 90012

TORRANCE
SO-0013743

THIS PERMIT MUST BE DISPLAYED AT PLACE OF BUSINESS

W- 34146 8/69 5 $ 82.50 ← This fee is payable Oct. 1st Each Year

PERMIT NO. ISSUED CLASS ANNUAL FEE

31119

INDUSTRIAL WASTE PERMIT

CITY OF LOS ANGELES

DEPARTMENT OF PUBLIC WORKS

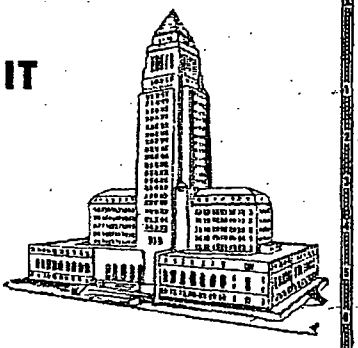

ISSUED TO:

Shell Chemical Company
19821 S. Hamilton Avenue
Los Angeles, California

TORRANCE
SO-0013748

RECOMMENDED BY: James L. Carey
SUPERINTENDENT, SEWER MAINTENANCE

BOARD OF PUBLIC WORKS
BY: Nawaz B. Hume
DIRECTOR, BUREAU OF SANITATION

THIS PERMIT BECOMES VOID UPON ANY CHANGE OF OWNERSHIP OR LOCATION WHATSOEVER

NOTIFY THE BUREAU OF SANITATION OF ANY CHANGES IN OWNERSHIP OR ADDRESS [redacted] SEE REVERSE SIDE

This permit signifies that the person named on the face hereof has fulfilled the requirements of Section 64.30 L.A.M.C., in making application to the Board of Public Works to discharge Industrial Wastes into the sewerage system; and that said application has been approved to discharge specific industrial wastes into the sewerage system in the manner in which was described therein.

This permit does not in any way authorize the permittee to violate any term or provision of the Municipal Code governing industrial waste disposal or any regulation of the Board of Public Works made pursuant thereto.

The Bureau of Sanitation reserves the right to refuse to re-issue any permit which has been revoked, lost, mutilated, or defaced.

TORRANCE
SO-0013749

INDUSTRIAL WASTE CONTROL
ADMINISTRATION BUILDING
2335 DOREIS PLACE
LOS ANGELES, CALIFORNIA 90031
Phone MA. 4-5211, Ext. 1253

IBM L14403-D

m 1101—100 Pads—11-68 (G 39, 40)

CITY OF LOS ANGELES
DEPARTMENT OF PUBLIC WORKS
BUREAU OF SANITATION
INDUSTRIAL WASTE CONTROL SECTION

PHONE
624-5211
Ext. 1253

APPLICATION FOR INDUSTRIAL WASTE PERMIT

See Reverse Side for Fee Schedule
(Submit in Duplicate)

W 34146
W-Number

1. Firm Name: Shell Chemical Company, A Division of Shell Oil Company
2. Type of Business: Synthetic Rubber Plant — 321-2340 (PHONE)
3. Installation Address: 19821 S. Hamilton Avenue (NUMBER & STREET) Los Angeles (CITY) California (ZIP CODE)
4. Mailing Address: P.O. BOX 211 (NUMBER & STREET) Torrance (CITY) California (STATE) 90509 (ZIP CODE)
5. Processes Involved: Butadiene, Styrene, Synthetic Rubber
6. Chemical and physical characteristics of waste discharge: Final combined treated and neutralized effluent.
7. Name of Applicant or Representative of Firm O. M. Williams, Plant Manager (PLEASE PRINT)

Signature: /s/ O. M. Williams Date 7/11/69

(OVER) DO NOT WRITE BELOW THIS LINE (OVER)

8. Size and location of sewer, S.D. or other: 57" L. A. County San #5 trunk sewer in P.E. r/w w/o Normandie Ave. via Private 14" press asbestos cement latex & rubber & plastic products washing.
9. Waste Processes: (53) ( ) ( ) ( ) ( ) clarification, neutralization chemical precipitation various pri. & sec skimmers
10. Required Treatment: (02) (03) (04) API Sep EFF surge tank auto sampler, pH recorder drop
11. Required Treatment Facility: (19) ( ) ( ) m/h special purpose anaolog computer
12. Additional Information: tailor discharge rates to L. A. County San #5 sewer availability as follows" 10:00 a.m. - 10:00 p.m., 600 gpm; 10:00 p.m. - 10:00 a.m., 2700gpm

TORRANCE
SO-0013750

13. Submitted by Inspector: Norman A. Cotter /s/ Date: 8-8-69
14. Recommended by Senior Inspector: J. C. Engerrer Date: 8-8-69
15. Approved by Principal Inspector: Charles A. Shunda Date: 8-26-69

16. APPLICANT: A permit is issued subject to conditions shown hereon and is revocable at any time for non-compliance with the regulating provisions of the Los Angeles Municipal Code or any policy of the Board of Public Works adopted pursuant thereto.

(OVER)

DO NOT WRITE IN THIS SPACE

New	x
Revision	
Change of Ownership	
Sewer	x
S.D.	
Watercourse	
Other	
G. G.	
Seats:	
Grease Trap	
Max. gpm	2700
Total gpd	2,376,000
Sec. 64.30	x
Sec. 64.31	
Class	5
District	5

SCHEDULE OF FEES

MAKE CHECK PAYABLE TO:

DEPARTMENT OF PUBLIC WORKS
CITY OF LOS ANGELES

MAIL TO:

INDUSTRIAL WASTE CONTROL SECTION
SEWER MAINTENANCE DIVISION
2335 DORRIS PLACE
LOS ANGELES, CALIFORNIA 90031

I. Section 64.30 — INDUSTRIAL WASTE DISPOSAL — Sewers and/or Storm Drains

1. Application Fee: $44.00 — Note: Submit this fee with application.

2.* Annual Fee:

Class 1	$16.50
Class 2	33.00
Class 3	49.50
Class 4	66.00
Class 5	82.50

*This fee will be billed to the permittee later and in accordance with the dates shown below.

Date of Issuance of Permit	Due Date of Annual Fee
Jan. 1 to March 31, incl.	April 1
Apr. 1 to June 30, incl.	July 1
July 1 to Sept. 30, incl.	Oct. 1
Oct. 1 to Dec. 31, incl.	Jan. 1

II. Section 64.31 — INDUSTRIAL WASTE DISPOSAL INTO WATERCOURSES

1. Application and Fee: The appropriate fee determined from the schedule below must be submitted with this application. The permittee will be billed annually thereafter in accordance with dates set forth above in regard to Section 64.30.

5,000 gals., per day, or less	Class 6	$ 44.00
5,001 - 50,000 gals., per day	Class 7	99.00
50,001 - 500,000 gals., per day	Class 8	198.00
500,001 gals., per day or greater	Class 9	401.50

FURTHER INFORMATION is available at the following District Offices:

Administration: 2335 Dorris Place; PHONE 624-5211, Ext. 1253

North Central Area: 2335 Dorris Place; PHONE 221-3095

Hollywood Area: 6014 Waring Avenue; PHONE 463-4667

Southern Area: 2002 W. Slauson Avenue; PHONE 291-1321

Harbor Area: Rm. 603, San Pedro City Hall; PHONE 831-9211, Ext. 451

San Fernando Valley Area: 14401 Erwin St., Rm. 7; PHONE 782-6125, Ext. 494

West Los Angeles Area: 7166 W. Manchester Ave., Rm. 2; PHONE 670-5016

NOTE: Except for the Administration Office, all District offices are open **from 7:30 a.m. to Noon only.**

TORRANCE
SO-0013751

SR 1909-1 (5-53) Printed in U.S.A.

Department of Public Works

Permit No	Period Covering	Amount	Date Passed for Pymt	Account	
W 16725	10/01/69 - 10/31/70	49.50	10/09/69	24701.33	
W 16933	10/01/69 - 10/31/70	49.50	10/09/69	24701.33	
W 34146	10/01/69 - 10/31/70	82.50	10/09/69	24701.33	
W 34146	10/01/70 10/31/71	82.50	10/12/70	~~24701.33~~ ~~7453.00~~	24701.33

TORRANCE
SO-0013753

STATE OF CALIFORNIA
DEPARTMENT OF PUBLIC HEALTH

Page 1 of 1 pages

RADIOACTIVE MATERIAL LICENSE

Supplementary Sheet

License Number 0559-70

Amendment Number 11

24-7

Shell Chemical Company
A Division of Shell Oil Company
P. O. Box 211
Torrance, CA 90509

Attention: A. R. Bean
Radiation Safety Officer

In response to a letter dated September 19, 1972 signed by A. R. Bean, License No. 0559-70 is hereby amended in part as follows:

To read:

13. The radiation safety officers in this program shall be A. R. Bean and D. G. Vredenburgh. A. R. Bean shall have primary responsibility for radioactive material described in Subitems D - I of this license with D. G. Vredenburgh as alternate.

SHELL CHEMICAL COMPANY
Elastomers Technical Center
RECEIVED
OCT 19 1972

TLK	✓	✓	DWF
JGB	✓		WRH
RHM	✓	Cc	ARB
AHA			
KRA	✓		
JTB		✓	JC
JWC			

To be handled by
Date completed
File

TORRANCE
SS-0005885

For the State Department of Public Health

Date October 12, 1972

by S. J. Kinsman

Simon Kinsman, Ph.D., Chief
Bureau of Radiological Health

SD 32 (Rev. 4-67)—Printed in U.S.A.

REFERENCE 24-7

SHELL DEVELOPMENT COMPANY

DATE SEPTEMBER 19, 1972

TO ELASTOMERS TECHNICAL CENTER - DIRECTOR

FROM RADIATION SAFETY OFFICER - A. R. BEAN

SUBJECT RESPONSIBILITY FOR RADIOACTIVE MATERIAL

With respect to radioactive material responsibility, D. G. Vredenburgh will replace K. J. Williams, who has been transferred from this location. The radiation safety officers shall be A. R. Bean and D. G. Vredenburgh. A. R. Bean shall continue to have primary responsibility for radioactive material as specified in Item #13, Amendment #10 of License #0559-70. D. G. Vredenburgh will act as alternate. He is an approved user of radioactive materials per Item #12, Amendment #9 of our license.

A R Bean

ARB:ws

A. R. Bean

cc: Simon Kinsman, Ph.D., Chief
Bureau of Radiological Health
2151 Berkeley Way
Berkeley, Calif. 94704

Jack C. Rogers, Director
Bureau of Occupational & Radiation Management
County of Los Angeles Health Department
313 North Figueroa
Los Angeles, Calif. 90012

TORRANCE
SS-0005887

24-7

STATE OF CALIFORNIA—HUMAN RELATIONS AGENCY

RONALD REAGAN, Governor

DEPARTMENT OF PUBLIC HEALTH

2151 BERKELEY WAY
BERKELEY 94704

SHELL CHEMICAL COMPANY
Elastomers Technical Center

FLK			DWF
JGB	action		WRH
RHM		cc	ARB
AHA			
KRA			
JTB			JC
JWC			

RECEIVED
AUG 24 1972
CU 9-25

To be handled by card mailed
Date completed 9-1-72 ARB
File

To persons holding California Licenses for Radioactive Material:

You may have already received a request for exposure data on your employees if you simultaneously hold a radioactive material license and an X-ray machine registration from the State of California. If so, please disregard this letter. We chose to save the time, labor and money entailed in trying to avoid contacting you twice. But if you have only a radioactive materials license, please read on.

About a year ago we agreed to participate with the U.S. Atomic Energy Commission in a pilot program to develop a central repository of certain occupational radiation exposure data. In carrying out our responsibility under the program, we sent letters to selected radioactive material licensees and X-ray machine registrants requesting their participation in providing such data on those employees who terminated employment or work assignment in 1970. We are pleased to report that occupational radiation exposure information was furnished to this office on some 750 employees of selected licensees and registrants.

The information reported has been recorded in the A.E.C.'s centralized occupational radiation exposure records repository, along with similar data on some 75,000 monitored employees of certain A.E.C. contractors and licensees, employees of other state licensees and registrants cooperating in the program, and monitored military and civilian personnel of the U.S. Air Force and Navy.

Considering the potential benefits of such a system to both employers and employees, the Department of Public Health has agreed to continue this program for another year. Hence, we again request your cooperation in sending us the exposure information you currently maintain for each employee who terminated his employment or work assignment with you in 1971. The employment period covered would begin with the employee's date of employment with you, and end with his date of termination in 1971. If an employee had more than one period of employment with you, we would appreciate copies of records for all periods if conveniently available. External exposure data may be submitted in the form of copies of film badge reports or on the enclosed form RH-2365. Please be certain that the records sent include the following information:

1. Employee's name

2. Employee's Social Security number

TORRANCE
SS-0005888

3. Employee's date of birth

4. Beginning and ending dates of employment

5. Exposure data for the employee's complete period of employment

6. Portion of the body for which exposure is recorded

7. Your license number

The exposure data with identification information which you forward to this office will be incorporated into the A.E.C.'s central exposure data repository and can be retrieved by you as well as by the terminated employee or his designee. We are hopeful that you will consider cooperating with us in this joint effort.

Please complete the enclosed stamped, self-addressed postcard and mail it to us at your earliest convenience. Exposure records can be mailed at a later date if they are not immediately available. If you have any questions, do not hesitate to contact us.

Sincerely yours,

Simon Kinsman

Simon Kinsman, Ph.D., Chief
Bureau of Radiological Health

Enclosures

STATE OF CALIFORNIA
DEPARTMENT OF PUBLIC HEALTH

RADIOACTIVE MATERIAL LICENSE

License Number 0559-70

Supplementary Sheet

Amendment Number 10

SHELL CHEMICAL COMPANY
Elastomers Technical Center
RECEIVED
AUG 28 1972
TLK ✓ JGB ✓ RHM AHA ✓ KRA ✓ JTB JWC
DWF WRH cc AHB ✓ JC
To be handled by
Date completed
File

Shell Chemical Company
A Division of Shell Oil Company
P. O. Box 211
Torrance, CA 90509

Attention: A. R. Bean
Radiation Safety Officer

In response to a letter dated July 24, 1972 with attachments signed by T. L. Keelen, License No. 0559-70 is hereby amended in part as follows:

To delete:

Subitems A, B and C are deleted in their entirety.

To read:

11. This license is subject to an annual fee of three hundred twenty (320) dollars due and payable on the anniversary of the date of issue of this license, July 25, 1963.

13. The radiation safety officers in this program shall be A. R. Bean and K. J. Williams. A. R. Bean shall have primary responsibility for radioactive material described in Subitems D-I of this license with K. J. Williams as alternate.

15. Detector cells containing Nickel 63 shall be tested for leakage and/or contamination at intervals not to exceed six months.

TORRANCE
SS-0005893

For the State Department of Public Health

Date August 18, 1972

by C. J. Mitt
for Simon Kinsman, Ph.D., Chief
Bureau of Radiological Health
2151 Berkeley Way, Berkeley, California 94704

(REV. 9-68) FORM 227-2551
26588-450 10-68 10M OSP

24-7

COUNTY OF LOS ANGELES
HEALTH DEPARTMENT
G. A. HEIDBREDER, M.D., M.P.H. • HEALTH OFFICER
313 NORTH FIGUEROA, LOS ANGELES, CALIF. 90012
TELEPHONE 625-3212

July 28, 1972

SHELL CHEMICAL COMPANY
Elastomers Technical Center
RECEIVED
AUG 1 1972
CU 9-1
TLK, JGB, RHM, AHA, KRA, JTB, JWC, DWF, WRH, JC
To be handled by
Date completed
File

Done - prior to receipt

Shell Chemical Company
A Division of Shell Oil Company
P. O. Box 211
Torrance, California 90509

Attention: A. R. Bean
Radiation Safety Officer

Gentlemen:

Subject: California Radioactive Materials License No. 0559-70
Facility Clearance - Gauging Devices

Acting upon your verbal request an inspection was made on July 17, 1972 covering the areas of your plant where nuclear gauging devices were being removed to verify that no radioactive materials or residual contamination were present.

Mr. Bruce A. Ault, Public Health Radiation Physicist for the Los Angeles County Health Department, was present and observed the removal of two of the six gauging devices salvaged by Thomas Gray and Associates, licensed Consulting Service.

Following the removal of the devices check surveys were made at the six gauging sites. It was determined that these facilities were acceptable for release to "Uncontrolled Use" as defined by Section 30258(d) and (y) of the California Radiation Control Regulations. You may consider this communication an official release of those areas of your plant.

As discussed, you should request an amendment in writing from the State Bureau of Radiological Health deleting these gauges (License Conditions 6, 7, 8, A, B, C) from your radioactive materials license. We would appreciate a copy of that letter as well as a copy of the final report from Thomas Gray and Associates for our files.

Your concern and attention in this important matter is appreciated by us. If you have any further questions on this or other items

TORRANCE
SS-0005894

of radiation safety, please call us at 625-3212, extension 281.

Yours very truly,

G. A. HEIDBREDER, M.D., M.P.H.
Health Officer

Jack C. Rogers

JACK C. ROGERS, Director
Bureau of Occupational
and Radiation Management

JCR:BAA:fsb
cc: ST BRH
DIS LA

COUNTY OF LOS ANGELES
HEALTH DEPARTMENT
G. A. HEIDBREDER, M.D., M.P.H. • HEALTH OFFICER
313 NORTH FIGUEROA, LOS ANGELES, CALIF. 90012
TELEPHONE 625-3212

July 27, 1972

24-7

Nuclear Medical Systems, Inc.
(Formerly Astro-Nuclear &
Medical Laboratories, Inc.)
515 Superior Avenue
Newport Beach, California 92660

Attention: Joseph H. Irani
Radiation Safety Officer

Gentlemen:

Subject: California Radioactive Materials License No. 1887-70
Facility Clearance

Upon request from you an inspection was made of your facilities at 19201 S. Vermont Avenue, Torrance, to see if your decontamination efforts had achieved reduction in residual radioactivity to a level acceptable for release to "Uncontrolled Use" as defined by Sections 30258(d) and (y) of the California Radiation Control Regulations.

Our findings confirm that the building and surroundings at the above address can be cleared for "Uncontrolled Use" in accordance with the Regulations. You may consider this communication our official release of these facilities.

Your cooperation in this effort is appreciated.

Yours very truly,

G. A. HEIDBREDER, M.D., M.P.H.
Health Officer

JACK C. ROGERS, Director
Bureau of Occupational
& Radiation Management

JCR:BAA:fsb
cc: ST BRH
Clark Hickman, OCHD
A. R. Bean, Radiation Safety Officer
Shell Chemical Company

SHELL CHEMICAL COMPANY
Elastomers Technical Center
RECEIVED
JUL 28 1972
TLK
JGB
RHM
AHA
RRA
JTB
JWC
DWF
WRH
JC
To be handled by
Date completed
File

TORRANCE
SS-0005896

24-7

COUNTY OF LOS ANGELES
HEALTH DEPARTMENT
G. A. HEIDBREDER, M.D., M.P.H. • HEALTH OFFICER
313 NORTH FIGUEROA, LOS ANGELES, CALIF. 90012
TELEPHONE 625-3212

July 13, 1972

SHELL CHEMICAL COMPANY
Bioassay Technical Center
RECEIVED
JUL 18 1972
To be handled by
Date completed
File

Nuclear Medical Systems, Inc.
(Formerly Astro-Nuclear &
Medical Laboratories, Inc.)
515 Superior Avenue
Newport Beach, California 92660

Attention: Joseph H. Irani
Radiation Safety Officer

Gentlemen:

Subject: California Radioactive Materials License No. 1887-70

On advice from the Shell Chemical Company that the property at 19201 South Vermont Avenue, Torrance, California was being sold, our office contacted you and subsequently visited that facility on July 10 and 12, 1972 to evaluate conditions preparatory to your vacating the premises.

During our discussions and visits, the following items of noncompliance were noted:

1) Radioactive material and equipment had been illegally transferred from 19201 S. Vermont Avenue to 515 Superior Avenue, Newport Beach, California. The Newport Beach location was not authorized as a place of use or storage on your license no. 1887-70. License Condition 10 and Section 30172 of the California Radiation Control Regulations.

   During the visit it was determined that all radioactive materials and a major portion of the laboratory facilities and equipment had been transferred on Sunday, July 9.

2) Written notice of intent to vacate the premises at 19201 South Vermont was not provided in writing 30 days prior to the move. Section 30298 of the Regulations.

The visits on July 10 and 12, 1972 to your facility on Vermont Avenue disclosed levels of radioactive contamination in excess of limits permitted for uncontrolled use.

TORRANCE
SS-0005897

COUNTY OF LOS ANGELES
HEALTH DEPARTMENT

To confirm our verbal orders to you in this matter, please be advised that the premises at 19201 South Vermont Avenue may not be released for "uncontrolled use" as defined by Section 30258(d) and (y) of the Regulations, until this office confirms that the contamination of the installation has been reduced "to a degree consistent with subsequent use as an uncontrolled area". Any wastes accumulated by either this decontamination activity or from previous operations involving radioactive material must be disposed of in accordance with Section 30285, License Condition 13, of the California Radiation Control Regulations. As discussed with you, when you believe the facility has been cleaned to a level suitable for release to uncontrolled use, this office will make a determination as to whether this facility is acceptable for release.

You are requested to advise this office as soon as you consider decontamination complete. Every effort will be made by this office to expedite your vacating the premises as soon as possible.

Yours very truly,

G. A. HEIDBREDER, M.D., M.P.H.
Health Officer

Jack C. Rogers

JACK C. ROGERS, Director
Bureau of Occupational &
Radiation Management

JCR:BAA:fsb
cc: ST BRH
Clark Hickman
Orange County Health Department
Shell Chemical Company
P.O.Box 211
Torrance, California 90509
Attention: Mr. J. T. Harlam

STATE OF CALIFORNIA—HUMAN RELATIONS AGENCY RONALD REAGAN, Governor

DEPARTMENT OF PUBLIC HEALTH
2151 BERKELEY WAY
BERKELEY 94704

SHELL CHEMICAL COMPANY
Elastomers Technical Center
RECEIVED
JUL 6 1972
TLK JGB RHM AHA KRA JTB JWC
DWF WRH ARB JC
To be handled by
Date completed
File
Attach to ARB

June 28, 1972

24-7

NOTICE TO CALIFORNIA LICENSEES

Gentlemen:

In cooperation with the Office of Hazardous Materials (OHM) of the U. S. Department of Transportation (DOT), we are making available to selected licensees a copy of their February Newsletter which is devoted exclusively to the transport of radioactive material. We believe that you will find the attached Newsletter helpful in regard to preparation and transport of packages of radioactive material.

It is estimated that possibly as many as 800,000 packages of radioactive material will be shipped this year in the United States. The safe transport of these packages within the public domain is based largely upon the integrity of the packaging and the proper preparation of the packages for shipment. We recommend that you read carefully the OHM Newsletter and consider how the information presented can be used to assure for your shipments that all packaging requirements are met.

Further, we urge that you review your procedures for radioactive material shipments and receipts to assure particularly that the following important items are fully implemented.

1. Use of the proper packaging for each material to be shipped.

2. Use only of packaging meeting specified quality of design and construction and in unimpaired physical condition.

3. Proper closing, marking and labeling of each package for transport, and provision of any necessary instructions for safely opening the package.

4. Survey of each package for radiation levels and leakage immediately prior to shipment.

5. Prompt survey of each package upon receipt for radiation levels and leakage. Immediate notification of carrier and DOT if abnormality is found.

Sincerely yours,

C. J. Mott

Chester J. Mott, Chief
Radioactive Materials Licensing
Bureau of Radiological Health

CJM
IG:fd
Attachment

TORRANCE
SS-0005899

24-7

RICHARD N. DONELSON
AND ASSOCIATES

RADIATION PHYSICS
HEALTH PHYSICS
NUCLEAR CONSULTING

6825 BIANCA AVENUE
VAN NUYS, CALIF. 91406
(213) 987-2939

SHELL CHEMICAL COMPANY
Chemicals Technical Center
RECEIVED
JUN 5 1972
CU 7-5
To be handled by
Date completed
File

June 2, 1972

Mr. Arthur Bean
Shell Chemical Corporation
P. O. Box 211
Torrance, California 90509

Dear Mr. Bean:

Our quotation for removal of the six 1 Ci Cs-137 sources in the Ohmart density gages, as well as the six smaller sources in the compensating cells, is as follows:

Not to exceed - $485.00 complete.

The quotation is based upon Shell Chemical performing the following:

1. Remove the 5 in-line gages, with sources and shielding intact, placing blank flanges on the ends of the gages, and lowering the gages to ground level where we would have easy access.

2. Rotating the shutter of the 6th gage to the "Off" position, fixing the shutter in this position, and removing and lowering the gage to ground level.

3. Removing the compensating cells from their present location.

The quotation includes:

1. My presence during removal of the gages to monitor the operation for the purpose of radiation safety of your personnel. Film badges would also be provided for your personnel, and you would be provided with the film badge reports subsequently.

2. A radiation survey after removal of the gages to insure that all radioactive material has been removed.

3. Assurance that source containers are properly packaged and labeled to meet applicable transportation regulations.

4. Removal of all radioactive material by California Salvage Company, a licensed waste disposal agency. Receipts for the radioactive material are provided by California Salvage.

The quotation is based on an estimate of 8 hours of my time at $20/hour, and 8 hours of California Salvage time at $10.60 per hour. If the work can be completed in less time, the price to you would be reduced accordingly.

We would appreciate knowing if our bid is accepted about three weeks before the work is to take place. The operation may be covered under our Radioactive Material License or under California Salvage's license, but since the wording is not clear, I would want to confirm this with the Bureau of Radiological Health. A license amendment may be required. While this is no problem, a certain amount of time is usually necessary.

Thank you for the opportunity to be of service.

Very truly yours,

RN Donelson

R. N. Donelson,
Certified Health Physicist

RND:dd

TORRANCE
SS-0005901

Thomas Gray and Associates

215 Lilac Lane
P.O. Box 312
Brea, California 92621
(714) 528-2446

SHELL CHEMICAL COMP...
Customers Technical Center
RECEIVED
MAY 26 1972
CU6-26

TBK	✓		DWF
JG3			WRH
PHM	✓	CC	ARB
AHA			
KRA			
JTB		✓	JC
JWC			

To be handled by
Date completed
File

24-7

Consulting Engineering Services

May 25, 1972

Shell Chemical Company
P.O. Box 211
Torrance, California 90509

Attn: Mr. A.R. Bean
Radiation Safety Officer

Dear Mr. Bean:

With regard to the removal and disposal of radioactive material from your location at 19821 South Hamilton Street, Los Angeles, California, and consisting of 6 Cesium 137 sealed sources of 1 Curie of activity or less, (Note: 1.2 Curie Cesium 137 source is depleted to approximately 925 mCi.) and 6 Radium 226 sealed sources of 0.1 mCi., all contained in Ohmart density gauges, we will provide the following:

1. Paperwork to the state of California which will remove the sources mentioned from your license, and transfer them to our license, for ultimate disposal. Copies of paperwork will be provided to you.

2. Two men for one full day to assist in removal of the complete source-detector units and loading of the units on our truck. One of the men will be licensed and authorized to conduct this removal.

3. A properly placarded truck, closed body, to transport the material.

4. Shielding material, if necessary, for source or source-detector units which may require it for transport.

The total cost to Shell Chemical for the services mentioned will be $938.00. It is understood that the Ra 226 sources will remain in the compensation cells for removal, and the Cs 137 sources in the source detector or source assembly units for removal.

A prompt response to this proposal, to facilitate scheduling and paperwork, will be appreciated. Thanks for your consideration.

Very truly yours,

Thomas A. Gray

TORRANCE
SS-0005902

SC-1003 (Rev. 1-60)

SHELL CHEMICAL COMPANY

REFERENCE 24-17

DATE MAY 11, 1972

TO ELASTOMERS TECHNICAL CENTER - DIRECTOR

FROM MANAGER - TORRANCE PLANT

SUBJECT REMOVAL OF RADIOACTIVE SOURCES FROM TORRANCE PLANT

Your assistance is requested in the disposal of the six radioactive sealed sources in the Polymer plant. Our knowledgeable personnel on radiation safety will be at their new job location prior to the removal of the sealed sources. To maintain continuity of the job we feel it could best be handled by your personnel. Actual removal of the sources should be coordinated with our R. L. Nauman. However, our timing is such that the week of July 3, 1972, would be the optimum disposal time.

D L Stahl

for E. S. Martin

RFP:pd

cc: D. L. Stahl
R. L. Nauman
A. R. Bean
K. J. Williams
L. W. Hooper

SHELL CHEMICAL COMPANY
Elastomers Technical Center
RECEIVED
MAY 12 1972
CU 6-12
TLK JCB RHM AHA FRA JTB JWC DWF WRH cc ARB JC
To be handled by
Date completed
File

Work in progress
Vendor selected

TORRANCE
SS-0005903

SC-1003 (Rev. 1-60)

REFERENCE

SHELL CHEMICAL COMPANY

DATE APRIL 28, 1972 24-7

TO TORRANCE PLANT - MANAGER

FROM DIRECTOR - ELASTOMERS TECHNICAL CENTER

SUBJECT REMOVAL OF RADIOACTIVE SOURCES FROM TORRANCE PLANT

The Torrance Plant has six radioactive sealed sources in the Polymer Plant. The use of the sources is regulated by the State of California Department of Public Health. Procedure for the removal of the sources is defined by the State and described in Section 30298 of Title 17, California Administrative Code. The procedure entails notifying the State no less than 30 days prior as to who will perform the actual removal and under what license they operate and to where the sources will be moved. The operation must be performed by an outside agency because no Shell Torrance personnel are qualified. Certified companies do exist in the Los Angeles area. We suggest asking one or more of them to submit a quotation to remove and dispose of the sources. In addition, the Ohmart Corporation should also be contacted because Ohmart, the supplier of the sources, may purchase them back. During the actual removal operation, a member of the local regulating agency, the Los Angeles County Radiation Health group, should be present.

The timing of the Plant shutdown requires selecting the certified company and writing the State prior to June 1. We are willing to assist you in these matters in whatever capacity that you wish.

T. L. Keelen

ARB:ws

T. L. Keelen

cc: Torrance Plant
D. L. Stahl
E. M. Lando
R. F. Purin
K. J. Williams

ETC
T. L. Keelen ← Copy To
J. G. Balas
R. H. Mann
K. R. Arnold
A. H. Anderegg
A. R. Bean

TORRANCE
SS-0005904

24-7

State of California
Department of Public Health

Bureau of Radiological Health, 2151 Berkeley Way, Berkeley, California 94704

APPLICATION FOR RADIOACTIVE MATERIAL LICENSE

Instructions: 1. Refer to Guide for Applicants, Form RH 3051. 2. Where the space provided on this form is insufficient, attach supplemental sheets referencing the part being expanded. 3. Submit all material in duplicate to the Bureau of Radiological Health at the address given above. 4. Medical applicants should obtain Form RH 3000.

1. a. Name of applicant Shell Development Company, A Division of Shell Oil Company

   b. Mailing address Number and Street P. O. Box 211

   City and State Torrance, Ca Zip 90509

   c. Telephone number Area Code 213 Number 323-3030 Extension 374

2. a. Type of business: ☐ individual ☐ partnership or association ☒ corporation

   b. List all addresses at which radioactive material will be used:

   Street address 19821 South Hamilton St. City Los Angeles Zip 90509

   Street address -- City Zip

   Street address -- City Zip

   c. This is an application for:

   ☐ A new radioactive material license

   ☒ Renewal of radioactive material license No. 0559-70

   ☐ Amendment to radioactive material license No.

3.

a. Nuclide	b. Chemical and/or physical form	c. Possession limit
A. Hydrogen 3	Titanium Tritide Foil (U.S. Radium Corp.)	6 sources not to exceed 250 millicuries each
B. Nickel 63	Foil (nuclear radiation development)	2 sources not to exceed 2 millicuries each
C. Hydrogen 3	Any	5 curies
D. Carbon 14	Any	100 millicuries
E. Sulfur 35	Any	10 millicuries
F. Iodine 131	Any	20 millicuries

*4. **Describe the proposed use of the radioactive material.**

TORRANCE
SS-0005923

RH 3050 8-68

*See attached sheets

Item 4. Proposed Use of Radioactive Materials

3A. To be used as components of Varian Aerograph detector cells incorporated in Varian Aerograph gas chromatograph units.

3B. To be used as components of Hewlett-Packard detector cells incorporated in Hewlett-Packard gas chromatograph units.

3C,D,E,F. To be used to tag compounds used in research and development studies (laboratory and pilot plant) of a variety of chemical reactions of interest in the manufacture of synthetic rubber (for example, polymerization, reaction mechanisms, mixing, etc.). The maximum amount of radioactive material involved in any step of the process at any one time is 1 curie of H^3 or 100 millicuries of C^{14}.

Item 7. Calibration of Instruments

Tracerlab SU-1H - Calibrated and repaired as necessary quarterly by Knight Engineering Service Co., Inglewood.

Packard Tricarb - Serviced by Packard Instrument Company and calibrated with standard samples prior to use.

Item 8. Personnel Monitoring and Bio Assay Procedures

Bio assay analyses performed by Bio-Science Laboratories of Van Nuys. All personnel handling radioisotopes are analyzed on a periodic basis. In addition, sample containers are available for immediate use in case of possible contamination from spillage.

Item 9. Facilities and Equipment

Detector cells containing Nickel 63 are tested for leakage every six months by Knight Engineering Service Co.

Concentrated tagged reagents are stored in a locked fire proof file cabinet. One low level radioactivity handling area is in the main laboratory in Bldg. X-504. The laboratory is marked in accord with Title 17 California Administrative Code.

Item 10. Radiation Safety Program

Shell Development management has delegated technical responsibility for radiation safety to the radiation safety unit of the Company safety committee. The activities of the radiation safety unit are reported monthly for review by management. The chairman of the unit is a radiation safety officer. The unit reviews all proposed programs involving radioactive tracers, arranges for the adequate

instruction of personnel involved in such work, passes on the suitability of facilities and practices, and prepares appropriate written procedures and verifies that they are followed.

Emergency procedures in case of spillage and possible contamination are posted in the designated laboratory area. Emergency clothing is also available. In case of contamination the area is capable of being sealed off.

The sealed sources, Nickel 63 detectors, are checked for leakage every six months by Knight Engineering Co.

Item 11. Waste Disposal

Nonvolatile liquid and solid radioactive waste materials are accumulated in a special, marked cabinet. Disposal is periodically performed by a licensed disposal agency, currently California Salvage Co. of San Pedro. Volatile components are vented in another marked cabinet in accordance with Title 17 California Administrative Code. The quantity of tritium vented is estimated to total less than 1.5 millicuries per year at a maximum rate of 1×10^{-6} microcurie per cubic centimeter of air leaving undiluted.

TORRANCE
SS-0005926

State of California
Department of Public Health

Bureau of Radiological Health, 2151 Berkeley Way, Berkeley, California 94704

STATEMENT OF TRAINING AND EXPERIENCE

Instruction: Every individual proposing to use radioactive material is required to submit a Statement of Training and Experience in duplicate to the address given above. Physicians should request Form RH 3000 when applying for medical isotope authorizations.

1. Name of proposed user: Arthur R. Bean, Jr. Position title: Senior Research Engineer

   Address: 6698 San Francisco Drive City: Buena Park Zip: 90620

   To be included on Lic. No. 0559-70 in name of Shell Development Company

2. Description of proposed use

   Use H^3 and C^{14} in Research and Development Studies.

3. Training:

   a. High School Graduate: Yes x No ____

   b. College or University: Name and location Tufts, Boston & University of So. Calif.

      Years completed 6 Degree M.S. Course of study Chemical Engineering

   c. Education specifically applicable to use of radioactive material

      U.S.P.H.S. Basic Radiological Health Course - May 1-12, 1967, Las Vegas, Nevada

4. Experience:

   a. List experience with radioactivity beginning with most recent

      (1) Dates: From 1967 to Present

      Title and duties: Senior Research Engineer, Supervise handling of H^3 & C^{14} tagged materials in research studies.

      Employer: Shell Development Company Address: 19821 S. Hamilton Ave., Los Angeles

      (2) Dates: From ____ to ____

      Title and duties: ____

      Employer: ____ Address: ____

      (3) Dates: From ____ to ____

      Title and duties: ____

      Employer: ____ Address: ____

RH 3050A 3-72

TORRANCE

State of California
Department of Public Health

Bureau of Radiological Health, 2151 Berkeley Way, Berkeley, California 94704

STATEMENT OF TRAINING AND EXPERIENCE

Instruction: Every individual proposing to use radioactive material is required to submit a Statement of Training and Experience in duplicate to the address given above. Physicians should request Form RH 3000 when applying for medical isotope authorizations.

1. Name of proposed user: David G. Vredenburgh Position title: Tech. Associate

Address: 5970 El Paseo Street City: Long Beach Zip: 90815

To be included on Lic. No. 0559-70 in name of Shell Development Company

2. Description of proposed use

Use tritium and carbon 14 for scintillation counting of radioactive tagged polymeric materials.

3. Training:

a. High School Graduate: Yes X No ____

b. College or University: Name and location Long Beach City College

Years completed 3 Degree AA Course of study Liberal Arts

c. Education specifically applicable to use of radioactive material

No specific education in radioactive materials at an accredited school. Attended a two-day course offered by R. N. Donaldson, CHP, on July 20 and 22, 1971 at Shell Chemical Company, 19821 S. Hamilton Street, Los Angeles, California.

4. Experience:

a. List experience with radioactivity beginning with most recent

(1) Dates: From June 1969 to Present

Title and duties: Technical Associate, preparation of polymeric samples containing tritium for scintillation counting, inventory control and disposal of radioactive material.

Employer: Shell Development Company Address: 19821 S. Hamilton St., Los Angeles

(2) Dates: From ____ to ____

Title and duties: ____

Employer: ____ Address: ____

(3) Dates: From ____ to ____

Title and duties: ____

Employer: ____ Address: ____

TORRANCE
SS-0005929

RH 3050A 3-72

SHELL DEVELOPMENT COMPANY
A DIVISION OF SHELL OIL COMPANY
P. O. BOX 211
TORRANCE, CALIFORNIA 90509

ELASTOMERS
TECHNICAL CENTER

TELEPHONE 323-3030
321-2340

April 11, 1973

24-7

Mr. Bruce Ault
Community Health Services
Bureau of Occupational & Radiation Management
Room 518
313 North Figueroa St.
Los Angeles, Calif. 90012

Dear Mr. Ault:

We intend to vacate our laboratory designated "radioisotope sample preparation area" or Room No. 5 of Bldg. X-505 of the Elastomers Technical Center at 19821 South Hamilton Avenue, Los Angeles. We are decontaminating the area to a degree consistent with subsequent use as an uncontrolled area per Section No. 30298 of Title 17 Code.

We would appreciate your inspection of the area as soon as possible upon telephone request by us.

Very truly yours,

R. H. Mann
for: T. L. Keelen
Director

ARB:ws

bc: T. L. Keelen ← THIS COPY FOR
J. G. Balas
R. H. Mann
K. R. Arnold
J. T. Bailey
D. G. Vredenburgh
A. R. Bean
ETC Files

TORRANCE
SS-0005931

SHELL DEVELOPMENT COMPANY
A DIVISION OF SHELL OIL COMPANY
P. O. BOX 211
TORRANCE, CALIFORNIA 90509

ELASTOMERS
TECHNICAL CENTER

TELEPHONE 323-3030
321-2340

March 27, 1973

License No: 0559-70

2-7

Simon Kinsman, Ph.D., Chief
Bureau of Radiological Health
State of California
Department of Public Health
2151 Berkeley Way
Berkeley, Calif. 94704

Dear Dr. Kinsman:

This is to notify you of the change in the name of our company from "Shell Chemical Company, A Division of Shell Oil Company" to "Shell Development Company". Our location and radiation safety officers, per Amendment Number 11 of October 12, 1972, remain the same.

Very truly yours

T. L. Keelen
Director

cc: Addressee

ARB:ws

bc: T. L. Keelen ← Copy To
A. R. Bean
D. G. Vredenburgh
ETC Files

TORRANCE
SS-0005932

SHELL DEVELOPMENT COMPANY
A DIVISION OF SHELL OIL COMPANY
P. O. BOX 211
TORRANCE, CALIFORNIA 90509

ELASTOMERS
TECHNICAL CENTER

TELEPHONE 323-3030
321-2340

24-9

November 21, 1972

Mr. John D. Parkhurst
Chief Engineer and General Manager
County Sanitation Districts of Los Angeles County
2020 Beverly Boulevard
Los Angeles, California 90087

Dear Mr. Parkhurst:

Enclosed is an application for a "Permit for Industrial Wastewater Discharge" for wastewater discharged from this location. This is being filed in accord with your letter of June 13 and our answer of September 13, 1972.

Flow of industrial wastewater from the Elastomers Technical Center has, until recently, been commingled with that of the Torrance Plant of Shell Chemical Company. The combined stream has been discharged to trunk sewer J.O. "D" on Normandie Avenue. On September 1, 1972 the Plant was permanently shut down. The Technical Center, a research and development organization, will continue to operate at this location until 1975.

On the shutdown of the Plant, the Technical Center continued to discharge its effluent to the Normandie sewer until October 11. On that date the effluent was redirected to the Shell Oil Dominguez Refinery through an existing pipeline and commingled with refinery effluent for treatment prior to discharge to the Sanitary Districts.

Obviously then, Technical Center effluent takes an "indirect" route to the Sanitary Districts. According to Section 401 of the April 1, 1972 Ordinance Regulating Sewer Construction, Sewer Use and Industrial Wastewater Discharges, we have interpreted that Technical Center effluent is "indirect" and thus we are applying for a permit. This matter was discussed between Mr. Anderegg of Shell and Mr. Rose of the Sanitation Districts on November 14, 1972.

We presume that the Technical Center will not be assessed charges for suspended solids and COD since the assessment will be made on Shell Oil based on the flow and composition of the combined stream. Your opinion on this interpretation will be appreciated.

Attached are data required in accord with the instructions for obtaining a Permit for Industrial Waste Discharge furnished by your office. No data have been submitted for Item 4f since the Shell Oil Refinery facilities meet Districts' requirements.

TORRANCE
SS-0004953

In summation, data are submitted to obtain for the Elastomers Technical Center of Shell Development Company a permit to discharge industrial wastewater to the Sanitation Districts. The discharge will be indirect, i.e., through the Shell Oil Dominguez Refinery effluent treatment system. The assumption has been made that all use charges for the Technical Center stream will be assessed to the Shell Oil Refinery.

Please contact Mr. A. H. Anderegg or Mr. L. E. Hanstedt at telephone No. 323-3030 for any additional information.

Yours very truly,

R.H. Mann

for: T. L. Keelen, Director

Attachments

LEH:eb
bc: Shell Oil (w/o attachments)
Dominguez-Wilmington Refinery - Manager
Tax Division - Los Angeles
bbc: L. E. Hanstedt - w/attachment
A. H. Anderegg - w/attachment
ETC Files - w/attachment

(Consecutive) (District Applied)

PERMIT FOR INDUSTRIAL WASTEWATER DISCHARGE
SANITATION DISTRICTS OF LOS ANGELES COUNTY
2020 Beverly Blvd., Los Angeles, Calif. 90057
John D. Parkhurst, Chief Engineer and General Manager

Los Angeles, Calif. November 21, 1972

APPLICATION IS HEREBY MADE BY Shell Development Company
Print (Firm Name)

P. O. Box 211, Torrance, California 90509
(Mailing Address)

Owner of the property located at:
(Owner, Tenant, Etc.)

19821 South Hamilton Avenue, Los Angeles, California
Print (Address of Property Producing Wastewater Discharge)

Through Shell Oil Dominguez Refinery effluent discharge.
Print (Location of Point of Wastewater Discharge to Sewerage System)

for a Permit for Industrial Wastewater Discharge to the sewerage system.

Type of Industry Research and Development, 2821
(General Description) (Federal S.I.C. No.)

Number of Employees (Full Time) 131 (Part Time) 0

Raw Materials Used Butadiene, Styrene, Isoprene
(General Description-Add Additional Sheets as Needed)

Products Produced KRATON® (a synthetic rubber)
(General Description-Add Additional Sheets as Needed)

Wastewater Producing Operations Polymer solution washing and solvent stripping in coagulation operations.

Cooling tower blowdown. Boiler plant blowdown. Laboratory sink drains.
(Full Description - Add Additional Sheets as Needed)

Time of Dischage - 24 hours/day AM to PM, Days Per Week (M)(T)(W)(Th)(F)(Sa)(Su)
(Working Day) (Circle Days)

Constituents of Wastewater Discharge Sodium Citrate - Boiler and Cooling Tower treatment chemicals. Sodium hydroxide.
(General Description-Attach Chemical Analyses Results to This Application)

Person in company responsible for industrial wastewater discharge:

A. H. Anderegg Manager Services Dept. 323-3030
Print (Name) (Position) (Telephone Number)

I affirm that all information furnished is true and correct and that the applicant will comply with the conditions stated on the back of this permit form.

TORRANCE
SS-0004955

Date Nov. 21, 1972

Signature for Applicant A. H. Anderegg Mgr. Services Dept.
(Company Administrative Official)(Name) (Position)

Approved by City or County Engineer

Date NOVEMBER-22-72

For (County Engineer)(City of) Carson

Name Edward L. Thompson

Position Supervising Engr. Inspector

Approved by Sanitation Districts

Date

John D. Parkhurst, Chief Engineer and General Manager

By

Position

NOTE: A permit fee may be required by the local City or County Engineer. This form when properly signed shall be a valid permit unless suspended or revoked.

ATTACHMENTS

SUPPLEMENTAL DATA
FOR
PERMIT FOR INDUSTRIAL WASTEWATER DISCHARGE

Attachment Number	Description of Attachment
1	Critical Parameter Report
2	Schematic Flow Diagram, ETC Water Use SS-72-7156
3	ETC Waste Disposal, Miscellaneous Information
4	Storm Drains System Map YT-15952
5	Process Sewers System Map YT-15953
6	Sanitary Sewers System Map YT-15954

SANITATION DISTRICTS OF LOS ANGELES COUNTY
INDUSTRIAL WASTEWATER
CRITICAL PARAMETER REPORT FORM

ATTACHMENT 1

M 70006
Box 223

IDENT. CODE	PARAMETER 1/	2/	QUANTITY VALUES		IDENT. CODE	PARAMETER 1/	2/	QUANTITY VALUES	
A	Flow (Total)		100M	gals/day	V	Manganese - Total		Absent	mg/l
B	Flow (Peak)		100	gals/min.	W	Mercury - Total	A	< 0.001	mg/l
C	COD	A	508	mg/l	X	Molybdenum - Total		Absent	mg/l
D	SS (Suspended Solids)	A	51.4	mg/l	Y	Nickel - Total	A	3.66	mg/l
E	pH @ 25°C	A	10.35	Units	Z	Selenium - Total		Absent	mg/l
F	Total Dissolved Solids	A	1357	mg/l	AA	Silver - Total		Absent	mg/l
G	Ammonia (N)	A	0.25	mg/l	BB	Sodium - Total	A	410	mg/l
H	Sulfide	A	< 0.01	mg/l	CC	Thallium - Total		Absent	mg/l
I	Cyanide		Absent	mg/l	DD	Tin - Total		Absent	mg/l
J	Fluoride	A	0.09	mg/l	EE	Titanium - Total		Absent	mg/l
K	Aluminum - Total	A	5.07	mg/l	FF	Zinc - Total	A	0.52	mg/l
L	Antimony - Total		Absent	mg/l	GG	Oil & Grease (Hexane Extract)	A	0.4	mg/l
M	Arsenic - Total		Absent	mg/l	HH	Phenols	A	< 0.05	mg/l
N	Beryllium - Total		Absent	mg/l	II	Surfactants (MBAS)	A	0.19	mg/l
O	Boron - Total	A	0.45	mg/l	JJ	Chlorinated Hydrocarbons (except pesticides)	A	Trichloroethylene	0.03
P	Cadmium - Total		Absent	mg/l			A	Chloroform	mg/l 0.019
Q	Chromium - Total	A	1.16	mg/l	KK	Pesticides (Chlor. Hycarb.)		Absent	mg/l
R	Cobalt - Total		Absent	mg/l	LL	Radioactivity (Alpha, Beta & Gamma)		Absent	pCi/l
S	Copper - Total	A	1.53	mg/l	MM	Temperature		90-95	Degrees °F
T	Iron - Total	A	1.64	mg/l	NN	Color	A	27	Units
U	Lead - Total	A	0.17	mg/l	OO	Thiosulfate (S)	A	0.2	mg/l
	NON-CRITICAL PARAMETERS (Report When Available)					OTHER PARAMETERS (Report When Requested)			
PP	Calcium	A	28.0	mg/l	A1				
QQ	Magnesium	A	8.9	mg/l	A2				
RR	Potassium	A	6.0	mg/l	A3				
SS	Barium	A	< 0.1	mg/l	A4				
TT	Nitrate	A	1.9	mg/l	A5				
UU	Chloride	A	136.9	mg/l	A6				
VV	Bromide	A	1.2	mg/l	A7				
WW	Sulfate	A	371.2	mg/l	A8				
XX	Phosphorus-Ortho	A	1.1	mg/l	A9				

TORRANCE
SS-0004957

NOTES:

1/ Report all critical parameters required by the Sanitation Districts and any other critical parameter known to be present in the wastewater. Those parameters required by the Districts but known to be absent from the wastewater may be reported by placing the word absent in the appropriate space.

2/ If values are obtained by measurements or analyses write A in this column. Analysis values must be determined, using representative 24-hour composite samples, by a State Certified or Districts Approved Laboratory. If values are obtained by estimate, write E in this column. Estimated values are acceptable for new plants only.

(Print) Truesdail Laboratories, Inc., 4101 No. Figueroa Street, Los Angeles, Calif. 90065
Name and Address of Laboratory Performing Analyses and Flow Measurements

(Print) Shell Development Company, Elastomers Technical Center — 2821
Name of Company Having Wastewater Discharge — SIC Numbers

(Print) 19821 South Hamilton Street, Los Angeles, California
Address of Wastewater Discharge

(Print) Commingled into and discharged with effluent of Shell Oil Co., Dominguez, Calif.
Additional Location Data (Data above should be for only one discharge point to the sewerage system)

Statement of Accuracy of Data

I hereby affirm that the above data comprise a true and correct representation of the wastewater discharged from the stated discharge point.

Date: 11/21/72 Location: Los Angeles, California

(Signed) Name — Position (Administrative Officer of Company with Wastewater Discharge) Manager Services Department

ATTACHMENT #2

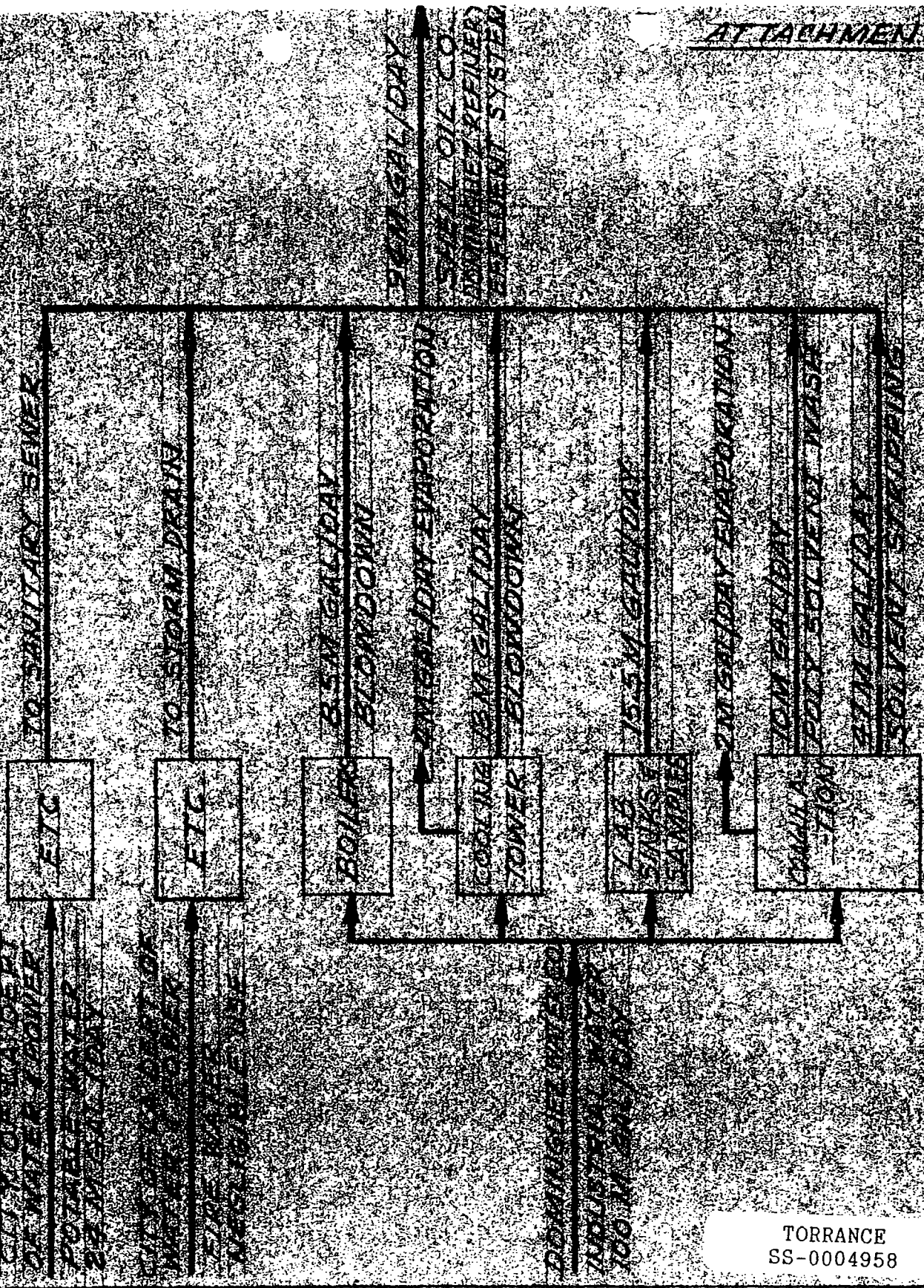

TORRANCE
SS-0004958

SHELL CHEMICAL COMPANY
TORRANCE PLANT

SCHEMATIC FLOW DIAGRAM ETC WATER USE

JOB TITLE SHELL DEVELOPMENT CO.

DATE NOV. 21, 1972 DRAWN BY R.M. OCHOA

JOB NUMBER APPROVED BY 11-21

SS 72-7156

ATTACHMENT 3

SHELL DEVELOPMENT COMPANY

ETC WASTE DISPOSAL
MISCELLANEOUS INFORMATION

Information on Item 4 (i):

Other liquid wastes leaving ETC are:

1) Sanitary Sewer Discharge of 24M gal/day.

2) Cleanup of any spillage that may occur of liquid fuel oil, raw materials, or process materials. We hope this will be zero.

3) Material skimmed from pits, ditches and sewers by vacuum truck. These are solid particles suspended in or floating on water. We anticipate this may amount to 3-5 truckloads annually.

4) No other liquid wastes are discharged.

Information of Item 4 (j):

As shown in the attached maps of the Process and Sanitary Sewer System, the two systems are completely separate.

APPLICATION NO. C110019

NEW CONSTRUCTION
PERMIT FOR INDUSTRIAL WASTEWATER DISCHARGE
SANITATION DISTRICTS OF LOS ANGELES COUNTY
2020 Beverly Blvd., Los Angeles, Calif. 90057
John D. Parkhurst, Chief Engineer and General Manager

PERMIT NO. [illegible]

Los Angeles, Calif.* 11 / 21 / 72 (original) 2 / 23 / 73 (present)
(MO. DAY YR.)

APPLICATION IS HEREBY MADE BY SHELL DEVELOPMENT COMPANY, a Division of Shell Oil Company
(PRINT) (FIRM NAME)

(Mailing Address) P. O. Box 211 (STREET) Torrance (CITY) California (STATE) 90[illegible] (ZIP)

Tenant (OWNER, TENANT, ETC.) of the property located at

(Street) 19821 So. Hamilton Avenue (City) Los Angeles, Calif. (Zip) [illegible]
(PRINT) (ADDRESS OF PROPERTY PRODUCING WASTEWATER DISCHARGE)

Assessors Map Book No. 7331 Page No.* 33 Parcel No.* 1
(LEGAL ADDRESS OF PROPERTY PRODUCING WASTEWATER DISCHARGE)

Through Shell Oil Dominguez Refinery effluent discharge.
(PRINT) (LOCATION OF POINT OF WASTEWATER DISCHARGE TO SEWERAGE SYSTEM)

for a Permit for Industrial Wastewater Discharge to the sewerage system.

Type of Industry* Research & Development, M. 17 2821
(GENERAL DESCRIPTION) (FEDERAL SIC NOS.)

Number of Employees (Full Time)* 129 (Part Time)* 0

Raw Materials Used* Butadiene, Styrene, Isoprene
(GENERAL DESCRIPTION – ADD ADDITIONAL SHEETS AS NEEDED)

Products Produced KRATON (a synthetic rubber)
(GENERAL DESCRIPTION – ADD ADDITIONAL SHEETS AS NEEDED)

Wastewater Producing Operations Polymer solution washing and solvent stripping in coagulation operations. Cooling tower blowdown. Boiler plant blowdown. Laboratory sink drains.
(FULL DESCRIPTION – ADD ADDITIONAL SHEETS AS NEEDED)

Time of Discharge – * 24 hours/day AM/PM to AM/PM, Days per Week* (M) (T) (W) (Th) (F) (Sa) (Su)
(WORKING DAY – CROSS OUT AM OR PM) (CIRCLE DAYS)

Wastewater Flow Rate Critical parameter estimate 100,000 G/d Measured average AA (Gallons Per Day) [illegible],000 gal/day

Constituents of Wastewater Discharge Boiler and cooling tower treatment chemicals. Sodium hydroxide. Sodium Citr.
(GENERAL DESCRIPTION – ATTACH CHEMICAL ANALYSES RESULTS TO THIS APPLICATION)

Person in company responsible for industrial wastewater discharge:

A. H. Anderson (PRINT) (NAME) Manager Services Dept. (POSITION) 323-3030 (TELEPHONE NUMBER)

I affirm that all information furnished is true and correct and that the applicant will comply with the conditions stated on the back of this permit form.

Date February 28, 1973

Signature for Applicant [signature] (COMPANY ADMINISTRATIVE OFFICIAL) (NAME) Manager Services Dept. (POSITION)

Approved by City or County Official

Date April 13 1973

For Dept. of County Engineers ☐

Name of Los Angeles ☐

Name

Position

Approved by Sanitation Districts of Los Angeles County

Date MAR 10 1973

John D. Parkhurst, Chief Engineer and General Manager

by Jay G. Kramer

Position SUPERVISOR IN CHARGE
INDUSTRIAL WASTE SECTION

Note: A permit fee may be required by the local City or County Agency.
This form when properly signed shall be a valid permit unless suspended or revoked.

[signature]

COUNTY ENGINEER'S COPY

76P235M 434 South San Pedro Street **AIR POLLUTION CONTROL DISTRICT** Los Angeles, Calif. 90013

P51749
SL/ TS-88

Operation under this permit must be conducted in compliance with all data and specifications included with the application under which this permit is issued. The equipment must be properly maintained and kept in good operating condition at all times. In accordance with Rule 10(c), this Permit to Operate must be posted or accessible.

LEGAL OWNER OR OPERATOR: SHELL DEVELOPMENT COMPANY, A DIVISION OF SHELL OIL COMPANY

Appl. No. A-74043

EQUIPMENT LOCATED AT: 19821 SOUTH HAMILTON STREET
LOS ANGELES, CALIFORNIA

EQUIPMENT DESCRIPTION AND CONDITIONS: EFFLUENT TRANSFER FACILITY CONSISTING OF:

1. COLLECTION BASIN, 6'-0" W. x 15'-10" L. x 13'-0" H., THREE SECTIONS, WITH A 10 H.P. AGITATOR.
2. EFFLUENT SURGE TANK, CAPACITY 2000 BARRELS, 30'-0" DIA. x 16'-0" H.
3. TRANSFER PUMP, NO. P-750, DURCO CENTRIFUGAL TYPE, WITH MECHANICAL SEAL AND A 25 H.P. MOTOR.
4. TRANSFER PUMP (SPARE), NO. P-751, DURCO CENTRIFUGAL TYPE, WITH PACKED GLAND AND A 20 H.P. MOTOR.
5. FRESH CAUSTIC PUMP, BYRON-JACKSON CENTRIFUGAL TYPE, WITH PACKED GLAND AND A 5 H.P. MOTOR (COMMON WITH THE PDF FACILITY).

(CONDITION ON THE FOLLOWING PAGE)

THIS PERMIT BECOMES VOID UPON ANY CHANGE OF OWNERSHIP OR ADDRESS, OR ANY ALTERATION

This permit does not authorize the emission of air contaminants in excess of those allowed by Division 20, Chapter 2, Article 3, of the Health and Safety Code of the State of California or the Rules and Regulations of the Air Pollution Control District. This permit cannot be considered as permission to violate existing laws, ordinances, regulation or statutes of other governmental agencies.

W11089 FEB 6 73 9 A 26.00
VOID UNLESS VALIDATED

AIR POLLUTION CONTROL OFFICER

BY Nelen Thompson, Permit Section

DATE February 6, 1973

TORRANCE
SS-0007198

AIR POLLUTION CONTROL DISTRICT
COUNTY OF LOS ANGELES

CONTINUATION OF PERMIT NO. P-51749
(MUST BE DISPLAYED WITH PERMIT)

(CONDITION)

THIS EQUIPMENT MUST NOT BE USED TO RECEIVE EFFLUENT WATER CONTAINING 200 GALLONS OR MORE PER DAY OF PETROLEUM PRODUCTS FROM ANY EQUIPMENT WHICH PROCESSES, REFINES, STORES OR HANDLES HYDROCARBONS WITH A REID VAPOR PRESSURE OF 0.5 POUNDS OR GREATER.

Appl. No. A-74043

AIR POLLUTION CONTROL OFFICER
BY Helen Thompson, Permit Section
DATE February 6, 1973

16-500191

TORRANCE
SS-0007199

JLK

SHELL DEVELOPMENT COMPANY
A DIVISION OF SHELL OIL COMPANY
P. O. BOX 211
TORRANCE, CALIFORNIA 90509

ELASTOMERS
TECHNICAL CENTER

TELEPHONE 323-3030
321-2340

December 18, 1972

24-9

Mr. Charles A. Sheridan
Principal Ind. Waste Inspector
City of Los Angeles
Department of Public Works
Sewer Maintenance Division
2335 Dorris Place
Los Angeles, California 90031

Dear Mr. Sheridan:

As discussed on December 13, 1972 between you, Mr. Tripp of your San Pedro office, and Mr. Hanstedt of this location, we understand that we are not to reapply for industrial waste permit No. W-16933. These discussions were initiated by our receiving a notice of revocation dated December 7, 1972.

In the discussions you confirmed our opinion that permit No. W-16933 is unnecessary because our industrial waste water is no longer discharged to the Los Angeles City sewer system. A request for cancellation of the permit, effective November 1, 1972 had been sent to you by Shell Chemical Torrance Plant. We understand that the request for cancellation was not received in time to keep the revocation notice from being mailed.

Yours very truly,

T. L. Keelen

T. L. Keelen

LEH:eb

bc: A. H. Anderegg
L. E. Hanstedt
ETC Files

TORRANCE
SS-0004921

SHELL DEVELOPMENT COMPANY
A DIVISION OF SHELL OIL COMPANY
P. O. BOX 211
TORRANCE, CALIFORNIA 90509

ELASTOMERS
TECHNICAL CENTER

TELEPHONE 323-30:
321-23.

February 1, 1973

Mr. John D. Parkhurst
Chief Engineer and General Manager
County Sanitation Districts of Los Angeles County
2020 Beverly Boulevard
Los Angeles, California 90087

Dear Mr. Parkhurst:

This letter with its attachments is a resubmittal of our application for a Permit for Industrial Wastewater Discharge originally forwarded to your office on November 21, 1972. The application and supporting data were returned to us on December 5, 1972 accompanied by a form letter stating that the plans were not approved because they did not describe adequately the facilities or processes. Revisions and additional information were requested. Your letter indicated also that one copy of the plans was being retained for your files.

On December 13, 1972, Mr. Hanstedt of Shell Development and Mr. Rose of the Sanitation Districts discussed your information request. Mr. Rose said that he was unable to determine the function of the large refinery type equipment included in the Elastomers Technical Center (ETC) area. He also stated that the process descriptions can be generalized. From the discussion, we understand that your primary concern is the discharge resulting from routine and upset conditions of the Product Development Facility (PDF) and of the solvent purification processes. We understand that you are also concerned about the process and storage vessels that have a reasonable possibility of being discharged into the Sanitation Districts sewer system.

To supply the requested information we have attached the following:

a. Five (5) copies of the previously submitted application complete with revised and additional data to support the application.

b. One (1) copy of revised and/or additional data to supplement the original application retained in your office.

All information in the process description (Attachment #5) and in the flow diagrams is considered trade secret.

TORRANCE
SS-0007595

Drawings YT-2657-11 and YT-5047-6 show unused refinery type equipment in the ETC area. The equipment was formerly used by Shell Chemical Company for butadiene manufacture. On shutdown of the butadiene plant the equipment was purged and is now open to the atmosphere.

We trust that the enclosed information will satisfy your requirements. Should you have any questions, please contact Mr. A. H. Anderegg or Mr. L. E. Hanstedt at this location, telephone No. 323-3030.

Yours very truly,

for T. L. Keelen, Director

Attachments

LEH:jh
bc: Shell Oil (w/o attachments)
Dominguez-Wilmington Refinery - Manager
Tax Division - Los Angeles

bbc: L. E. Hanstedt - w/attachment
A. H. Anderegg - w/attachment
ETC Files - w/attachment Copy To

TORRANCE
SS-0007596

LIST OF ATTACHMENTS (Revised)

"Permit for Industrial Wastewater Discharge"

Attachment Number	Description of Attachment
1	Critical Parameter Report
2	Schematic Flow Diagram ETC Water Use SS-72-7156
3	ETC Waste Disposal Miscellaneous Information
4	ETC Process and Storage Tanks Information(1)
5	ETC Process Development Facility (PDF) Process Description(1)(2)
YT-15952-2	ETC Storm Drains System Map(3)
YT-15953-3	ETC Process Sewers System Map(3)
YT-15954-3	ETC Sanitary Sewers System Map(3)
YT-2657-11	Butadiene Unit 150 and 180 Sections Equipment Locations(1)
YT-5047-6	Butadiene Unit 100 Sections Equipment Locations(1)
YT-15977	PDF Feed & Polymerization Process Flow Sheet(1)(2)
YT-15978	PDF Reaction, Catalyst Removal & Blending Simplified Process Flow Sheet(1)(2)
YT-15992	PDF Coagulation & Solvent Recovery Engineering Flow Diagram(1)(
YT-15991	PDF Product Dewatering Engineering Flow Diagram(1)(2)
YT-15994	PDF Drying & Pelletizing Engineering Flow Diagram(1)(2)
YT-15989	PDF Alternate Finishing High Temperature Coagulation Process Flow Sheet(1)(2)
YT-15990	PDF Alternate Finishing Dryer Engineering Flow Diagram(1)(2)
YT-15988	Recovered Solvent Purification for PDF Process Flow Sheet(1)(2)

NOTES:
(1) Additional Material to that submitted on November 21, 1972.
(2) Trade secret material.
(3) Revised material that replaces similar material submitted with application of November 21, 1972.

ATTACHMENT 4

SHELL DEVELOPMENT COMPANY

ETC PROCESS AND STORAGE
TANKS INFORMATION

The following tanks contain material that has a reasonable possibility of being discharged into the Sanitation District Sewer System:

Number	Dimensions	Volume	Chemical Compound	Concentration	Frequency of Disposal
T-120	30' dia. x 16' high	2,000 bbls	Water	100%	Infrequent
T-155	30' dia. x 16' high	2,000 bbls	NaOH	25%	Infrequent
V-101	12' dia. x 45' horizontal	44,700 gal	Solvent & Water	Trace of Solvent	< 1000 gal/w
V-127	7' dia. x 30' horizontal	9,500 gal	Solvent & Water	Trace of Solvent	< 1000 gal/w
V-128	7' dia. x 30' horizontal	9,500 gal	Solvent & Water	Trace of Solvent	< 1000 gal/w
V-112	4' dia. x 14' horizontal	1,430 gal	Solvent & Water	Trace of Solvent	100 gal/w

T-120 is provided to store industrial waste water in the event that the refinery must stop the transfer or to hold in-plant any contaminated waste water which cannot be discharged to the Sanitation District's sewer system.

T-155 supplies the caustic used to adjust the pH of the waste water. An excess of caustic could be discharged to our waste water upon failure of the motor valve or the controller. This should be corrected prior to discharge to the Sanitation District's sewers when our waste water passes through the effluent facilities in the Shell Oil Refinery at Dominguez.

V-101, 127 and 128 store recycle and waste solvent streams for recovery operations. Water frequently phase separates from the solvent phase and is manually drained to the process sewer. V-112 is a distillation column accumulator in which small quantities of water phase separate from the solvent during distillation. Water is drawn off to the process sewer by a controller. An operator error or equipment failure, followed by failure to hold the contaminated waste water in T-120, and then followed by failure to skim the solvent in the oil settling basins of the refinery effluent system could result in solvent being discharged to the Sanitation District's sewer system.

The other process and storage tanks in service at the Elastomers Technical Center could discharge into the Sanitation District's sewer system only upon a series of highly improbable incidents.

LEH/HH/eb

TORRANCE
SS-0007598

ATTACHMENT 5

SHELL DEVELOPMENT COMPANY
ETC PROCESS DEVELOPMENT FACILITY (PDF)
PROCESS DESCRIPTION

The solvents and most of the large volume feeds for PDF are stored in dyked areas to preclude contamination of either surface or process sewer drainage systems in the event of upset or emergency operation. (Note: No such upsets or emergencies have been experienced to date and the probability of such occurrences is slight.)

PDF operations take place in and near Buildings X-514, X-515, and the south part of X-505 as shown on flow diagrams, YT-15977, YT-15978, YT-15992, YT-15991, YT-15994, YT-15989, and YT-15990 which are enclosed. Here, solvents and feeds are treated and then reacted to form rubber polymers in the first step of the process. No waste water is generated during this step under normal operation.

The solution of polymer is next reacted further with addition of a catalyst. This metallic catalyst is subsequently removed by extraction using a dilute acid. The dilute acid extractant is then steam stripped to remove and collect trace quantities of volatile hydrocarbon. Caustic is used to neutralize the acid (pH $\cong$8-9) and the stream is cooled before being discharged to the process sewer. This constitutes one of two direct process streams discharged to the industrial waste water. No abnormal discharges are anticipated during upset or emergency operation of these process steps.

The final steps in the process involve removing the volatile hydrocarbon solvent and subsequent drying of the polymer. Solvent removal is accomplished by direct contact with steam. The vapors are condensed and phase separated. Steam condensate from this operation is stripped to remove any volatile solvent and is discharged to the process sewer. This constitutes the second direct process stream discharged as industrial waste water.

After solvent removal, the polymer is dried in a hot air oven and packaged in bags. No abnormal discharges are anticipated during upset or emergency operation of these process steps.

The solvent from the above operation is purified by distillation as shown on attached process plan sheet, YT-15988, and recycled. The equipment used in this operation is some of the equipment in the 100 section of the former butadiene unit. This is an intermittent operation with a maximum of 2 days running per week. Small amounts (less than 100 gallons per run) of water are manually drained to the process sewer from this operation. No abnormal discharges are anticipated from this process.

If any abnormal discharges were to occur from upsets or emergencies, they can be held in-plant for suitable disposal without contamination of the industrial waste water. In addition, as our effluent is transferred to the waste water treatment facilities of the Shell Oil Company Refinery at Dominguez, clean-up can be done there prior to discharge into the Sanitation Districts sewer system.

BWS/LEH/jh

SHELL DEVELOPMENT COMPANY
A DIVISION OF SHELL OIL COMPANY
P. O. BOX 211
TORRANCE, CALIFORNIA 90509

TELEPHONE 323-3030
321-2340

ELASTOMERS
TECHNICAL CENTER

24-9-2

February 13, 1973

Air Pollution Control District
County of Los Angeles
434 South San Pedro Street
Los Angeles, California 90013

Attention: Helen Thompson, Permit Section

Gentlemen:

Enclosed are two drafts for permits to operate equipment at this location in response to your two requests for fees due letters dated January 26, 1973.

Payment is made as follows:

A. Draft No. 20247, for $400.00 covering applications A-62973-75 (incl) and A-72517-18.

B. Draft No. 20248, for $1,700.00, covering applications A-72522-24 (incl) and A-72678.

Yours very truly,

A. H. Anderegg
Manager, Services

AHA:jh

Attachments

bc: T. L. Keelen Copy To
L. E. Hanstedt
A. H. Anderegg
ETC Files

TORRANCE
SS-0007196

AIR POLLUTION CONTROL DISTRICT
COUNTY OF LOS ANGELES
434 SOUTH SAN PEDRO STREET / LOS ANGELES, CALIFORNIA 90013 / (213) 629-4711

ROBERT L. CHASS
AIR POLLUTION CONTROL OFFICER

February 6, 1973

Sector SL/ TS-88

24-92

Shell Development Company, A Division
of Shell Oil Company
P. O. Box 211
Torrance, California

Attention: Mr. T. L. Keelen
Director of Elastomers
Technical Center

Gentlemen:

Transmitted herewith are the following permits authorizing you to operate the described equipment:

19821 SOUTH HAMILTON STREET, LOS ANGELES, CALIFORNIA

Permit No.	Application No.	Equipment Description
P-51749	A-74043	EFFLUENT TRANSFER FACILITY

SHELL CHEMICAL COMPANY
Elastomers Technical Center
RECEIVED
FEB 8 1973
TLK ✓ JGB AHM ASA KRA JTB JWC
DWF WRH JC
To be handled by
Date completed
File

originals of attachment to ASA.

Rule 10. c. A person who has been granted under Rule 10 a permit to operate any article, machine, equipment, or other contrivance described in Rule 10 (b), shall firmly affix such permit to operate, an approved facsimile, or other approved identification bearing the permit number upon the article, machine, equipment, or other contrivance in such a manner as to be clearly visible and accessible. In the event that the article, machine, equipment, or other contrivance is so constructed or operated that the permit to operate cannot be so placed, the permit to operate shall be mounted so as to be clearly visible in an accessible place within 25 feet of the article, machine, equipment, or other contrivance, or maintained readily available at all times on the operating premises.

These permits are being issued covering your application on file at the Air Pollution Control District.

Very truly yours,

Robert L. Chass
Air Pollution Control Officer

Helen Thompson, Permit Section

RLC:HT:je
Enclosure

TORRANCE

76P235M · 434 South San Pedro Street **AIR POLLUTION CONTROL DISTRICT** Los Angeles, Calif. 90013

PERMIT TO OPERATE

P51749
SL/ TS-88

Operation under this permit must be conducted in compliance with all data and specifications included with the application under which this permit is issued. The equipment must be properly maintained and kept in good operating condition at all times. In accordance with Rule 10(c), this Permit to Operate must be posted or accessible.

Appl. No. A-74043

LEGAL OWNER OR OPERATOR: SHELL DEVELOPMENT COMPANY, A DIVISION OF SHELL OIL COMPANY

EQUIPMENT LOCATED AT: 19821 SOUTH HAMILTON STREET
LOS ANGELES, CALIFORNIA

EQUIPMENT DESCRIPTION AND CONDITIONS: EFFLUENT TRANSFER FACILITY CONSISTING OF:

1. COLLECTION BASIN, 6'-0" W. x 15'-10" L. x 13'-0" H., THREE SECTIONS, WITH A 10 H.P. AGITATOR.
2. EFFLUENT SURGE TANK, CAPACITY 2000 BARRELS, 30'-0" DIA. x 16'-0" H.
3. TRANSFER PUMP, NO. P-750, DURCO CENTRIFUGAL TYPE, WITH MECHANICAL SEAL AND A 25 H.P. MOTOR.
4. TRANSFER PUMP (SPARE), NO. P-751, DURCO CENTRIFUGAL TYPE, WITH PACKED GLAND AND A 20 H.P. MOTOR.
5. FRESH CAUSTIC PUMP, BYRON-JACKSON CENTRIFUGAL TYPE, WITH PACKED GLAND AND A 5 H.P. MOTOR (COMMON WITH THE PDF FACILITY).

(CONDITION ON THE FOLLOWING PAGE)

THIS PERMIT BECOMES VOID UPON ANY CHANGE OF OWNERSHIP OR ADDRESS, OR ANY ALTERATION

This permit does not authorize the emission of air contaminants in excess of those allowed by Division 20, Chapter 2, Article 3, of the Health and Safety Code of the State of California or the Rules and Regulations of the Air Pollution Control District. This permit cannot be considered as permission to violate existing laws, ordinances, regulation or statutes of other governmental agencies.

AIR POLLUTION CONTROL OFFICER

BY Nelen Thompson, Permit Section

DATE February 6, 1973

W1 1 0 8 9 FEB 6 7 3 9 A 26.00

VOID UNLESS VALIDATED

TORRANCE

AIR POLLUTION CONTROL DISTRICT
COUNTY OF LOS ANGELES

CONTINUATION OF PERMIT NO. P-51749
(MUST BE DISPLAYED WITH PERMIT)

(CONDITION)

THIS EQUIPMENT MUST NOT BE USED TO RECEIVE EFFLUENT WATER CONTAINING 200 GALLONS OR MORE PER DAY OF PETROLEUM PRODUCTS FROM ANY EQUIPMENT WHICH PROCESSES, REFINES, STORES OR HANDLES HYDROCARBONS WITH A REID VAPOR PRESSURE OF 0.5 POUNDS OR GREATER.

Appl. No. A-74043

AIR POLLUTION CONTROL OFFICER
BY Helen Thompson
Helen Thompson, Permit Section
DATE February 6, 1973

16-500191

TORRANCE

SHELL DEVELOPMENT COMPANY
A DIVISION OF SHELL OIL COMPANY
P. O. BOX 211
TORRANCE, CALIFORNIA 90509

TELEPHONE 323-3030
321-2340

ELASTOMERS
TECHNICAL CENTER

24-9-2

January 29, 1973

Air Pollution Control District
County of Los Angeles
434 South San Pedro Street
Los Angeles, California 90013

Attention: Helen Thompson, Permit Section

Gentlemen:

Enclosed is draft No. 20230 in the amount of $260.00 covering the fee due on our application No. A-74043, Effluent Transfer Facility.

This is in response to your request for fee due dated January 19, 1973.

Yours very truly,

A. H. Anderegg
Manager, Services

Attachment
LEH: jh
cc: T. L. Keelen ← Copy To
L. E. Hanstedt
ETC Files

TORRANCE
SS-0007200

AIR POLLUTION CONTROL DISTRICT
COUNTY OF LOS ANGELES
434 SOUTH SAN PEDRO STREET / LOS ANGELES, CALIFORNIA 90013 / (213) 629-4711

24-9-2

ROBERT L. CHASS
AIR POLLUTION CONTROL OFFICER

January 19, 1973

SHELL CHEMICAL COMPANY
Elastomers Technical Center
RECEIVED
JAN 22 1973

TLK	✓		DWF
JGB	✓		WRH
RHM	✓		
AHA	acting		
KRA			
JTB			
JWC	CO 2-22-73	✓	JC

To be handled by Chas. Keelen to APCD with
Date completed ..... of 1/29 paid
File .....

Shell Development Company, A Division
of Shell Oil Company
P. O. Box 211
Torrance, California 90509

Attention: Mr. T. L. Keelen
Director of Elastomers
Technical Center

REQUEST FOR FEE DUE

Gentlemen:

Appl. No.	Fee Schedule	Rating	Total Fee	Fee Paid	Fee Due
A-74043	1	40 H.P.	$300.00	$40.00	$260.00

Please refer to your application for permit to operate the equipment described on the attached page(s). This equipment has been inspected and found to be operating satisfactorily. If it has been determined that a conditional permit is necessary (under Rule 21), the conditions are so listed with the description. If not so listed, conditions are not required.

Pursuant to Rule 40 of the Rules and Regulations of the Air Pollution Control District, every applicant for authorization to construct or for permit to operate shall pay a fee based on the energy, power, or capacity associated with the equipment. The fee schedules are listed within Rule 40. The filing fee required at the time of filing each application is deducted from the total fee requirements of the permits to be issued under the one application. The fee due is listed in the last column. Upon receipt of this amount, permit(s) will be issued for the operation of the equipment. NON-PAYMENT OF THE FEE BY FEBRUARY 19, 1973 WILL RESULT IN THE AUTOMATIC CANCELLATION OF THIS APPLICATION AND THE LOSS OF THE FILING FEE.

Very truly yours,

Robert L. Chass
Air Pollution Control Officer

Helen Thompson, je
Helen Thompson, Permit Section

RLC:HT:je
Enclosure

TORRANCE

P51749

[illegible]

Appl. No. A-74043

SHELL DEVELOPMENT COMPANY, A DIVISION
OF SHELL OIL COMPANY

10001 SOUTH HAMILTON STREET
LOS ANGELES, CALIFORNIA

EFFLUENT TRANSFER FACILITY CONSISTING OF:

1. COLLECTION BASIN, 5'-0" W. x 13'-10" L. x 13'-0" H., THREE SECTIONS, WITH A 10 H.P. AERATOR.
2. EFFLUENT SURGE TANK, CAPACITY 2000 BARRELS, 30'-0" DIA. x 16'-0" H.
3. TRANSFER PUMP, NO. P-750, DURCO CENTRIFUGAL TYPE, WITH MECHANICAL SEAL AND A 25 H.P. MOTOR.
4. TRANSFER PUMP (SPARE), NO. P-751, DURCO CENTRIFUGAL TYPE, WITH PACKED GLAND AND A 20 H.P. MOTOR.
5. FRESH CAUSTIC PUMP, DURCO-JACKSON CENTRIFUGAL TYPE, WITH PACKED GLAND AND A 5 H.P. MOTOR (COMMON TO THE PUMP FACILITY).

(CONDITION ON THE FOLLOWING PAGE)

TORRANCE
SS-0007212

P-51749

(CONDITION)

THIS EQUIPMENT MUST NOT BE USED TO RECEIVE EFFLUENT WATER CONTAINING 200 GALLONS OR MORE PER DAY OF PETROLEUM PRODUCTS FROM ANY EQUIPMENT WHICH PROCESSES, REFINES, STORES OR HANDLES HYDROCARBONS WITH A REID VAPOR PRESSURE OF 0.5 POUNDS OR GREATER.

Appl. No. A-74043

TORRANCE
SS-00[illegible]

24-9-2

SHELL DEVELOPMENT COMPANY
A DIVISION OF SHELL OIL COMPANY
P. O. BOX 211
TORRANCE, CALIFORNIA 90509

TELEPHONE 323-3030
321-2340

ELASTOMERS
TECHNICAL CENTER

January 12, 1973

Air Pollution Control District
County of Los Angeles
434 South San Pedro Street
Los Angeles, California 90013

Attention Mr. Robert C. Murray

Gentlemen:

We request the cancellation of the following Permits to Operate and the removal and destruction of supporting data from your files:

APPLN. NO.	PERMIT NO.	DATE	PERMIT COVERAGE
2710	2726	3/21/51	Effluent control area
9143	11333	6/1/54	Roof for API separator basin
A-41328	P-29793	3/14/69	Sludge tank T-564
A-41327	P-29841	3/14/69	Floc-aid tank T-563
A-41349	P-29875	3/14/69	Waste water treatment plant
A-56667	P-40612	11/12/70	Storm drain treatment plant
A-56668	P-46242	10/7/71	Process effluent treatment plant

These Permits cover equipment which was expected to remain active in Elastomers Technical Center (ETC) service when the Shell Chemical Company Torrance Plant prepared permit cancellation lists July 18, 1972. However, plans were subsequently changed and this equipment is no longer owned nor operated by Shell.

Please contact Mr. L. E. Hanstedt at telephone No. 323-3030 if any additional information is required.

Very truly yours,

A. H. Anderegg
Manager Services

LEH:eb

bc: T. L. Keelen
A. H. Anderegg
L. E. Hanstedt
ETC Files

Copy To

TORRANCE
SS-0007214

SHELL DEVELOPMENT COMPANY
A DIVISION OF SHELL OIL COMPANY
P. O. BOX 211
TORRANCE, CALIFORNIA 90509

ELASTOMERS
TECHNICAL CENTER

TELEPHONE 323-3030
321-2340

M70209
Box 274

February 1, 1973

Mr. John D. Parkhurst
Chief Engineer and General Manager
County Sanitation Districts of Los Angeles County
2020 Beverly Boulevard
Los Angeles, California 90087

Dear Mr. Parkhurst:

This letter with its attachments is a resubmittal of our application for a Permit for Industrial Wastewater Discharge originally forwarded to your office on November 21, 1972. The application and supporting data were returned to us on December 5, 1972 accompanied by a form letter stating that the plans were not approved because they did not describe adequately the facilities or processes. Revisions and additional information were requested. Your letter indicated also that one copy of the plans was being retained for your files.

On December 13, 1972, Mr. Hanstedt of Shell Development and Mr. Rose of the Sanitation Districts discussed your information request. Mr. Rose said that he was unable to determine the function of the large refinery type equipment included in the Elastomers Technical Center (ETC) area. He also stated that the process descriptions can be generalized. From the discussion, we understand that your primary concern is the discharge resulting from routine and upset conditions of the Product Development Facility (PDF) and of the solvent purification processes. We understand that you are also concerned about the process and storage vessels that have a reasonable possibility of being discharged into the Sanitation Districts sewer system.

To supply the requested information we have attached the following:

a. Five (5) copies of the previously submitted application complete with revised and additional data to support the application.

b. One (1) copy of revised and/or additional data to supplement the original application retained in your office.

All information in the process description (Attachment #5) and in the flow diagrams is considered trade secret.

M70209

Drawings YT-2657-11 and YT-5047-6 show unused refinery type equipment in the ETC area. The equipment was formerly used by Shell Chemical Company for butadiene manufacture. On shutdown of the butadiene plant the equipment was purged and is now open to the atmosphere.

We trust that the enclosed information will satisfy your requirements. Should you have any questions, please contact Mr. A. H. Anderegg or Mr. L. E. Hanstedt at this location, telephone No. 323-3030.

Yours very truly,

for T. L. Keelen, Director

Attachments

LEH:jh
bc: Shell Oil (w/o attachments)
Dominguez-Wilmington Refinery - Manager
Tax Division - Los Angeles

bbc: L. E. Hanstedt - w/attachment
A. H. Anderegg - w/attachment
ETC Files - w/attachment Copy To

LIST OF ATTACHMENTS (Revised)

"Permit for Industrial Wastewater Discharge"

Attachment Number	Description of Attachment
1	Critical Parameter Report
2	Schematic Flow Diagram ETC Water Use SS-72-7156
3	ETC Waste Disposal Miscellaneous Information
4	ETC Process and Storage Tanks Information(1)
5	ETC Process Development Facility (PDF) Process Description(1)(2)
YT-15952-2	ETC Storm Drains System Map(3)
YT-15953-3	ETC Process Sewers System Map(3)
YT-15954-3	ETC Sanitary Sewers System Map(3)
YT-2657-11	Butadiene Unit 150 and 180 Sections Equipment Locations(1)
YT-5047-6	Butadiene Unit 100 Sections Equipment Locations(1)
YT-15977	PDF Feed & Polymerization Process Flow Sheet(1)(2)
YT-15978	PDF Reaction, Catalyst Removal & Blending Simplified Process Flow Sheet(1)(2)
YT-15992	PDF Coagulation & Solvent Recovery Engineering Flow Diagram(1)(2)
YT-15991	PDF Product Dewatering Engineering Flow Diagram(1)(2)
YT-15994	PDF Drying & Pelletizing Engineering Flow Diagram(1)(2)
YT-15989	PDF Alternate Finishing High Temperature Coagulation Process Flow Sheet(1)(2)
YT-15990	PDF Alternate Finishing Dryer Engineering Flow Diagram(1)(2)
YT-15988	Recovered Solvent Purification for PDF Process Flow Sheet(1)(2)

NOTES:
(1) Additional Material to that submitted on November 21, 1972.
(2) Trade secret material.
(3) Revised material that replaces similar material submitted with application of November 21, 1972.

ATTACHMENT 4

SHELL DEVELOPMENT COMPANY

ETC PROCESS AND STORAGE TANKS INFORMATION

The following tanks contain material that has a reasonable possibility of being discharged into the Sanitation District Sewer System:

Number	Dimensions	Volume	Chemical Compound	Concentration	Frequency of Disposal
T-120	30' dia. x 16' high	2,000 bbls	Water	100%	Infrequent
T-155	30' dia. x 16' high	2,000 bbls	NaOH	25%	Infrequent
V-101	12' dia. x 45' horizontal	44,700 gal	Solvent & Water	Trace of Solvent	< 1000 gal/wk
V-127	7' dia. x 30' horizontal	9,500 gal	Solvent & Water	Trace of Solvent	< 1000 gal/wk
V-128	7' dia. x 30' horizontal	9,500 gal	Solvent & Water	Trace of Solvent	< 1000 gal/wk
V-112	4' dia. x 14' horizontal	1,430 gal	Solvent & Water	Trace of Solvent	100 gal/wk

T-120 is provided to store industrial waste water in the event that the refinery must stop the transfer or to hold in-plant any contaminated waste water which cannot be discharged to the Sanitation District's sewer system.

T-155 supplies the caustic used to adjust the pH of the waste water. An excess of caustic could be discharged to our waste water upon failure of the motor valve or the controller. This should be corrected prior to discharge to the Sanitation District's sewers when our waste water passes through the effluent facilities in the Shell Oil Refinery at Dominguez.

V-101, 127 and 128 store recycle and waste solvent streams for recovery operations. Water frequently phase separates from the solvent phase and is manually drained to the process sewer. V-112 is a distillation column accumulator in which small quantities of water phase separate from the solvent during distillation. Water is drawn off to the process sewer by a controller. An operator error or equipment failure, followed by failure to hold the contaminated waste water in T-120, and then followed by failure to skim the solvent in the oil settling basins of the refinery effluent system could result in solvent being discharged to the Sanitation District's sewer system.

The other process and storage tanks in service at the Elastomers Technical Center could discharge into the Sanitation District's sewer system only upon a series of highly improbable incidents.

LEH/HH/eb

TORRANCE
SS-0007598

ATTACHMENT 5

SHELL DEVELOPMENT COMPANY
ETC PROCESS DEVELOPMENT FACILITY (PDF)
PROCESS DESCRIPTION

The solvents and most of the large volume feeds for PDF are stored in dyked areas to preclude contamination of either surface or process sewer drainage systems in the event of upset or emergency operation. (Note: No such upsets or emergencies have been experienced to date and the probability of such occurrences is slight.)

PDF operations take place in and near Buildings X-514, X-515, and the south part of X-505 as shown on flow diagrams, YT-15977, YT-15978, YT-15992, YT-15991, YT-15994, YT-15989, and YT-15990 which are enclosed. Here, solvents and feeds are treated and then reacted to form rubber polymers in the first step of the process. No waste water is generated during this step under normal operation.

The solution of polymer is next reacted further with addition of a catalyst. This metallic catalyst is subsequently removed by extraction using a dilute acid. The dilute acid extractant is then steam stripped to remove and collect trace quantities of volatile hydrocarbon. Caustic is used to neutralize the acid (pH $\cong$8-9) and the stream is cooled before being discharged to the process sewer. This constitutes one of two direct process streams discharged to the industrial waste water. No abnormal discharges are anticipated during upset or emergency operation of these process steps.

The final steps in the process involve removing the volatile hydrocarbon solvent and subsequent drying of the polymer. Solvent removal is accomplished by direct contact with steam. The vapors are condensed and phase separated. Steam condensate from this operation is stripped to remove any volatile solvent and is discharged to the process sewer. This constitutes the second direct process stream discharged as industrial waste water.

After solvent removal, the polymer is dried in a hot air oven and packaged in bags. No abnormal discharges are anticipated during upset or emergency operation of these process steps.

The solvent from the above operation is purified by distillation as shown on attached process plan sheet, YT-15988, and recycled. The equipment used in this operation is some of the equipment in the 100 section of the former butadiene unit. This is an intermittent operation with a maximum of 2 days running per week. Small amounts (less than 100 gallons per run) of water are manually drained to the process sewer from this operation. No abnormal discharges are anticipated from this process.

If any abnormal discharges were to occur from upsets or emergencies, they can be held in-plant for suitable disposal without contamination of the industrial waste water. In addition, as our effluent is transferred to the waste water treatment facilities of the Shell Oil Company Refinery at Dominguez, clean-up can be done there prior to discharge into the Sanitation Districts sewer system.

BWS/LEH/jh

SHELL DEVELOPMENT COMPANY
A DIVISION OF SHELL OIL COMPANY
P. O. BOX 211
TORRANCE, CALIFORNIA 90509

TELEPHONE 323-3030
321-2340

ELASTOMERS
TECHNICAL CENTER

March 6, 1973

24-9-3

Department of County Engineer
Project Planning & Pollution
Control Division
9150 East Imperial Highway
Downey, California 90242

Attention: Mr. Ruben Garcia

Gentlemen:

The attached application No. C110019 for a permit for industrial wastewater discharge is hereby resubmitted on the form supplied to us by Mr. Rorie in his memorandum of February 17, 1973. Please note that the new form has not been approved by a City or County Engineer. We will appreciate your having the form signed by an appropriate individual.

We presume that our industrial discharge will be incorporated with the discharge of the Shell Oil Dominguez/Wilmington Refinery for determination of an overall surcharge which will be assessed against the refinery. This point was discussed between Mr. Hanstedt of this organization and Mr. Rorie of the Sanitation Districts on March 1, 1973. Please advise if you do not concur.

Yours very truly,

A. H. Anderegg, Manager
Services Department

Attachment

bc: Shell Oil Dominguez/Wilmington Refinery
R. A. O'Hare
Shell Oil Legal Department - West Coast Division
M. V. Koski
J. H. Fields
ETC
T. L. Keelen
A. H. Anderegg
L. E. Hanstedt
ETC Files

COPY TO

TORRANCE
SS-0007582

SM-22-1 (Rev. 9-57)

SHELL OIL COMPANY

REFERENCE

24-9-3

DATE MARCH 5, 1973

TO WCD LAND - B. G. KERR
WILMINGTON - ENVIRONMENTAL CONSERVATION MANAGER
SHELL CHEMICAL COMPANY - ELASTOMERS TECHNICAL CENTER -
A. H. ANDEREGG

FROM LEGAL DEPARTMENT
WEST COAST DIVISION

SUBJECT LOS ANGELES COUNTY SANITATION DISTRICT
INDUSTRIAL WASTE WATER

Reference is made to our February 26, 1973 memorandum concerning the subject surcharge. In order for us to coordinate the efforts in this matter, we request that each by March 20, 1973 of the addresses hereof furnish this office (no later than March 20) with a computation of their respective anticipated surcharges as follows:

B. G. Kerr - Dominguez Oil Field

R. A. O'Hare - Wilmington Refinery) & Dominguez Refinery) Compute separately

A. H. Anderegg - Elastomers Technical Center

In computing this anticipated surcharge, please consider the tax offset as zero.

Upon receipt of all of these computations, M. V. Koski and the writer will make an initial determination as to how and to what extent these surcharges should be combined. We will than request that R. D. Kerick provide us with copies of any rights-of-way, easements or licenses connecting any of the above parcels for which we propose to combine the surcharges. After receiving these instruments, we will all meet to review the feasibility of our approach and make the necessary modifications thereto.

Should you have any questions concerning the foregoing, please contact the writer.

ORIGINAL SIGNED BY
J. H. FIELDS

J. H. Fields

JHF:deh

cc: WCD Production Manager
WC Pipe Lines - Right of Way - R. D. Kerrick
Western Tax Office - M. V. Koski
Wilmington Treasury - R. E. Engler

SHELL CHEMICAL COMPANY
Elastomers Technical Center
RECEIVED
MAR 13 1973
CU 4-13-73
TLK ✓ DWF
JGG WRH
RHM
AHA action
KRA
JTB JC
JWC
To be handled by
Date completed
File

Answered by memo in March

TORRANCE

COUNTY SANITATION DISTRICTS
OF
LOS ANGELES COUNTY

2020 BEVERLY BOULEVARD
LOS ANGELES, CALIFORNIA 90057

JOHN D. PARKHURST
CHIEF ENGINEER AND GENERAL MANAGER

TELEPHONE
(213) 484-1370

24-9-3

March 10, 1973

File: 8-00.05-00/ 73

SHELL CHEMICAL COMPANY
Masterfoods Technical Center
RECEIVED
MAR 20 1973
To be handled by
Date completed
File

Mr. Jack M. Betz
Assistant Director
Bureau of Sanitation
Department of Public Works
Room 948, City Hall
Los Angeles, Ca. 90012

Re: Industrial Wastewater Discharge Permit No. 309
Shell Development Co.
19821 S. Hamilton Ave.
Los Angeles, Ca.

Dear Mr. Betz:

Enclosed are four approved sets of plans for proposed industrial waste discharge from subject company. Plans consist of:

* Shell Development Co. drawings for the facility including drawing #'s YT-15952-2, YT-2657-11, YT-15953-3, YT-15954-3, YT-5047-6, YT-15977, YT-15978, YT-15992, YT-15991, YT-15994, YT-15989, YT-15990, and YT-15988, plus an attached letter explaining the submittal, a list of attachments, an Industrial Waste Permit Application (old form), a revised submittal explanation, a preliminary Critical Parameter Report Form, a Water Use Schematic Diagram, miscellaneous information concerning waste disposal, a description of process and storage tanks, and a process description.

Approval is contingent upon continuing compliance with all applicable Ordinance requirements, /___/ upon corrections shown in red on the drawings, /x/ upon the following specific requirements:

* 1. The enclosed Critical Parameter Report Form #2 shall be filled out and returned to the Sanitation Districts by July 1, 1973, and again on that date every year thereafter. Analyses are to be performed by a state certified laboratory or by a laboratory approved by the Sanitation Districts.

TORRANCE
SS-0007579

2. Discharge of total chromium to the sewer may be restricted to .8 mg/l in the future. Shell Development Company is advised to be prepared for this eventuality.

Very truly yours,

John D. Parkhurst
Chief Engineer and
General Manager

By Jay G. Kremer
Jay G. Kremer
Supervisor in Charge=
Industrial Waste Section

JGK:WER:gb

** cc: Mr. A. H. Anderegg
Shell Development Co.
P. O. Box 211
Torrance, Ca. 90509

Encls. *, **

TORRANCE
SS-0007580

SANITATION DISTRICTS OF LOS ANGELES COUNTY
INDUSTRIAL WASTEWATER
CRITICAL PARAMETER REPORT FORM

#2

Ident. Code	PARAMETER 1/	2/	QUANTITY VALUES	Ident. Code	PARAMETER 1/	2/	QUANTITY VALUES
A	Flow (Total)		gals/day	V	Manganese - Total		mg/l
B	Flow (Peak)		gals/min.	W	Mercury - Total		mg/l
C	COD		mg/l	X	Molybdenum - Total		mg/l
D	SS (Suspended Solids)		mg/l	Y	Nickel - Total		mg/l
E	pH		Units	Z	Selenium - Total		mg/l
F	Total Dissolved Solids		mg/l	AA	Silver - Total		mg/l
G	Ammonia (N)		mg/l	BB	Sodium - Total		mg/l
H	Sulfide		mg/l	CC	Thallium - Total		mg/l
I	Cyanide		mg/l	DD	Tin - Total		mg/l
J	Fluoride		mg/l	EE	Titanium - Total		mg/l
K	Aluminum - Total		mg/l	FF	Zinc - Total		mg/l
L	Antimony - Total		mg/l	GG	Oil & Grease (Hexane Extract)		mg/l
M	Arsenic - Total		mg/l	HH	Phenols		mg/l
N	Beryllium - Total		mg/l	II	Surfactants (MBAS)		mg/l
O	Boron - Total		mg/l	JJ	Chlorinated Hydrocarbons (except pesticides)		mg/l
P	Cadmium - Total		mg/l				
Q	Chromium - Total		mg/l	KK	Pesticides (Chlor. Hycarb.)		mg/l
R	Cobalt - Total		mg/l	LL	Radioactivity (Alpha, Beta & Gamma)		pCi/l
S	Copper - Total		mg/l	MM	Temperature		Degrees °F
T	Iron - Total		mg/l	NN	Color		Units
U	Lead - Total		mg/l	OO	Thiosulfate (S)		mg/l

NON-CRITICAL PARAMETERS (Report When Available)				OTHER PARAMETERS (Report When Requested)			
PP	Calcium		mg/l	A1			
QQ	Magnesium		mg/l	A2			
RR	Potassium		mg/l	A3			
SS	Barium		mg/l	A4			
TT	Nitrate		mg/l	A5			
UU	Chloride		mg/l	A6			
VV	Bromide		mg/l	A7			
WW	Sulfate		mg/l	A8			
XX	Phosphorus-Ortho		mg/l	A9			

TORRANCE
SS-0007581

NOTES:

1/ Report all critical parameters required by the Sanitation Districts and any other critical parameter known to be present in the wastewater. Those parameters required by the Districts but *known to be absent* from the wastewater may be reported by placing the word absent in the appropriate space.

2/ If values are obtained by measurements or analyses write A in this column. Analysis values must be determined, using representative 24-hour composite samples, by a State Certified or Districts Approved Laboratory. If values are obtained by estimate, write E in this column. *Estimated values are acceptable for new plants only.*

(Print) Name and Address of Laboratory Performing Analyses and Flow Measurements

(Print) Name of Company Having Wastewater Discharge SIC Number(s)

(Print) Address of Wastewater Discharge

(Print) Additional Location Data (Data above should be for only *one* discharge point to the sewerage system)

Statement of Accuracy of Data

I hereby affirm that the above data comprise a true and correct representation of the wastewater discharged from the stated discharge point.

Date: _____ Location: _____, California _____

(Signed) Name Position (Administrative Officer of Company with Wastewater Discharge).

APPLICATION NO. C110019

NEW CONSTRUCTION
PERMIT FOR INDUSTRIAL WASTEWATER DISCHARGE
SANITATION DISTRICTS OF LOS ANGELES COUNTY
2020 Beverly Blvd., Los Angeles, Calif. 90057
John D. Parkhurst, Chief Engineer and General Manager

PERMIT NO. [illegible]

01 Los Angeles, Calif.* 11 / 21 / 72 (original) 2 / 21 / 73 (present)
(Q.A.) (MO. DAY YR.)

APPLICATION IS HEREBY MADE BY SHELL DEVELOPMENT COMPANY, a Division of Shell Oil Company
(PRINT) (FIRM NAME)

06 (Mailing Address) P. O. Box 211 (STREET) 005 Torrance (CITY) California (STATE) 90509 (ZIP)

07 Tenant (OWNER, TENANT, ETC.) of the property located at

08 (Street) 19821 So. Hamilton Avenue (PRINT) 111 (City) Los Angeles, Calif. (Zip) 90502
(ADDRESS OF PROPERTY PRODUCING WASTEWATER DISCHARGE)

Assessors Map Book No. 7351 Page No.* 33 Parcel No.* 1
(LEGAL ADDRESS OF PROPERTY PRODUCING WASTEWATER DISCHARGE)

Through Shell Oil Dominguez Refinery effluent discharge.
(PRINT) (LOCATION OF POINT OF WASTEWATER DISCHARGE TO SEWERAGE SYSTEM)

for a Permit for Industrial Wastewater Discharge to the sewerage system.

12 Type of Industry* Research & Development, M. 17 2821
(GENERAL DESCRIPTION) (FEDERAL SIC NOS.)

19 Number of Employees (Full Time)* 129 (Part Time)* 0

21 Raw Materials Used* Butadiene, Styrene, Isoprene
(GENERAL DESCRIPTION – ADD ADDITIONAL SHEETS AS NEEDED)

Products Produced KRATOND (a synthetic rubber)
(GENERAL DESCRIPTION – ADD ADDITIONAL SHEETS AS NEEDED)

Wastewater Producing Operations Polymer solution washing and solvent stripping in coagulation operations. Cooling tower blowdown. Boiler plant blowdown. Laboratory sink drains.
(FULL DESCRIPTION – ADD ADDITIONAL SHEETS AS NEEDED)

31 Time of Discharge – * 24 hours/day AM/PM to AM/PM, Days per Week* (M) (T) (W) (Th) (F) (Sa) (Su)
(WORKING DAY – CROSS OUT AM OR PM) (CIRCLE DAYS)

* Wastewater Flow Rate* Critical parameter estimate 100,000 G/d Measured average AA (Gallons Per Day) 91,000 gal/day

Constituents of Wastewater Discharge Boiler and cooling tower treatment chemicals. Sodium hydroxide. Sodium Citr.
(GENERAL DESCRIPTION – ATTACH CHEMICAL ANALYSES RESULTS TO THIS APPLICATION)

Person in company responsible for industrial wastewater discharge:

01 A. H. Andstegg (PRINT) (NAME) Manager Services Dept. (POSITION) 323-3030 (TELEPHONE NUMBER)

I affirm that all information furnished is true and correct and that the applicant will comply with the conditions stated on the back of this permit form.

Date February 28, 1973

Signature for Applicant [signature] (COMPANY ADMINISTRATIVE OFFICIAL) (NAME) Manager Services Dept. (POSITION)

Approved by City or County Official

Date April 12, 1973

For Dept. of County Engineers ☐

Name of Los Angeles ☐

Name

Position

Approved by Sanitation Districts of Los Angeles County

Date MAR 10 1973

John D. Parkhurst, Chief Engineer and General Manager

by Jay G. Kramer

Position SUPERVISOR IN CHARGE
INDUSTRIAL WASTE SECTION

Note: A permit fee may be required by the local City or County Agency.
This form when properly signed shall be a valid permit unless suspended or revoked.

[signature] Chief Engineer

COUNTY ENGINEER'S COPY

CALIFORNIA COASTAL ZONE CONSERVATION COMMISSION
NORTH CENTRAL COAST REGION
MARIN COUNTY CIVIC CENTER
SAN RAFAEL, 94903
CALIFORNIA

M E M O R A N D U M

April 16, 197

To: North Central Coast Regional Commissioners and others intere

From: Michael L. Fischer, Executive Director.

Subject: Guidelines for the review of permit applications.

TORRANCE
SS-0007541

At the Commission's April 5th meeting, action on most permit applications was held over pending the development of guidelines against which each development could be weighed.

Attached is a proposed set of guidelines to meet this need. The take the form of seven major questions based on the language or intent of various sections of the Coastal Zone Conservation Act. Additional sources (California Environmental Quality Act Guidelines, Interim Review Criteria developed by Sedway/Cooke, and a checklist being prepared by the Select Committee on Coastal Zone Resources) were used in developing sub-questions under each of the seven major questions.

In weighing a development against each guideline, three "overlay questions" should be asked:

1. Is the question applicable to the development?

2. If so, to what extent? Have any mitigating measures be proposed?

3. Is the extent of impact great enough to justify a permi denial or the imposition of conditions upon a permit?

The Commission's staff, using its own resources and information applicants, will answer the first two questions, summarizing the findings in a staff report. During the initial months while sta is being formed the quantitative information needed to answer th second overlay question (on the extent of impact) may of necessi be somewhat sketchy. On major projects, environmental impact st

ments should serve as a source for much of the necessary information. The third overlay question, of course, can be answered only by the Commission.

The proposed guidelines were reviewed at an April 11 meeting of the Permit Procedures Committee, and will be included on the April 19 Commission agenda for discussion (although not necessarily for formal action).

NORTH CENTRAL COAST REGIONAL COMMISSION

PROPOSED GUIDELINES FOR THE REVIEW OF PERMIT APPLICATIONS

QUESTION 1:

Does the development have any substantial adverse environmen or ecological effect?

a. Does it affect the habitat of rare or endangered species'

b. Does it affect the movement of resident or migratory wil life?

c. Does it breach established standards for solid waste or litter control?

d. Does it have a substantial detrimental effect on air or water quality or ambient noise level?

e. Does it result in contamination of water supply or groun water?

f. Does it cause substantial flooding, erosion or siltation'

g. Does it cause a major alteration of natural landform, including watercourses?

QUESTION 2:

Does the development maintain, restore and enhance the overal quality of the coastal zone environment?

a. Does it create substantial interference with or detract from scenic vistas to or along the coast from the state highway nearest the shoreline or any road or outlook generally used by the public?

b. Does it locate structures on promontories, heretofore undeveloped hillcrests, or other natural features of visu prominence?

c. Is it compatible with existing immediately surrounding de velopment?

QUESTION 3:

Does the development constitute an irreversible and irretrievable commitment of coastal zone resources?

a. Does it convert an agricultural area to non-agricultural use?

b. Does it adversely affect commercial or sport fisheries, kelp harvesting or maricultural activities?

c. Does it adversely affect forestry and other major vegetative resources?

d. Does it irreversibly expend or preclude the utilization o limited oil and mineral deposits?

QUESTION 4:

Will the development reduce or impose restrictions on the publ use of coastal resources?

a. Does it provide for access to publicly owned or used beach es, tidal and submerged lands, the mean high tide line (where there is no beach), recreation areas and natural reserves?

b. Does it reduce the size of any beaches or other areas usab for public recreation?

QUESTION 5:

Is the development located in an area susceptible to hazards to life, property or health?

a. Is the area subject to landslides, flood, inundation from seismic sea waves, or earthquake faults?

b. Does the development itself increase the probability of hazardous shoreline erosion, siltation, slope instabili or failure in the event of earthquake, or does it create the foreseeable need for future major alteration to the environment as a protection against hazards to perso or property?

QUESTION 6:

Does the development constitute a commitment to future additional development whose cumulative effect would cause a substantial adverse impact on the coastal environment?

a. Would the cumulative development require undue new support facilities such as roadways; utility transmission lines; water supply, solid waste, fire protection or sewage treatment facilities; schools, commercial centers?

b. Would the cumulative development exceed the designed or known natural capacities of the development site and immediately surrounding areas?

QUESTION 7:

Does the development preserve, protect or restore the resources of the coastal zone for the enjoyment of current and succeeding generations?

a. Does it provide new public access to heretofore inaccessible beaches, trails, or other recreation areas?

b. Does it create opportunities for the enjoyment of the coast by many different segments of the population?

c. Does it provide or protect long-term public benefits of a scientific or educational nature?

d. Does it preclude other uses of a greater public benefit to which the site is especially suited?

SHELL DEVELOPMENT COMPANY
A DIVISION OF SHELL OIL COMPANY
P. O. BOX 211
TORRANCE, CALIFORNIA 90509

ELASTOMERS
TECHNICAL CENTER

TELEPHONE 323-30
321-23

April 27, 1973

City of Los Angeles
Department of Building & Safety
Room 201, City Hall
San Pedro, California 90731

Mr. J. S. Marzullo, Sr. Electrical Inspector

Gentlemen:

Reference City of Los Angeles Electrical Permit SP-04031 and your letter of April 17, 1973, the lengthy time required to act on the non-compliance items of the installation is regretted. Communications have been difficult as the engineering contractor entered bankruptcy and items concerning the project have been routed through Shell's Houston office.

We are now proceeding as rapidly as possible to meet compliance. The manufacturer of our boilers is in the process of rectifying the non-compliance boiler items. Twelve other items have been completed and we are in the process of engineering and contracting for the remainder of the work.

We are including three enclosures, as follows:

1. A "Request for Modification of Building Ordnances" with reference to our Ankerwerk injection molding machine.

2. A copy of Schematic Wiring Diagrams, Drawings P-62809, P-62810 and P-62811. These are by the New Britain Machine Company, American representatives for the Ankerwerk machine. These drawings are per your request No. 23 on Sheet A50637.

3. As required under the conditions of "Request for Modification of Building Ordnances" file No. 671130 two graphic load charts are included.

   a. A chart of the load on the 400 amp feeder to building X-510. This chart covers the representative period of March 19 through March 26, 1973. This shows the loading to be well under the 50% load factor requested. A 5 amp Easterline Angus recording ammeter was

used with a coil to give a multiplier of 80. A full scale reading of 5 would indicate 400 amps.

b. A chart of the total load on 480 volt main supply at the area 180 substation is included. This chart covers the period of March 1 through March 12, 1973. This chart indicates operation well under the 60% load factor requested. The Easterline Angus ammeter was used with a coil to give a multiplier of 240. A full scale reading would indicate 1200 amps.

Yours very truly,

A. H. Anderegg
Manager Services

Attachments (3)

WMM:eb
bc: T. L. Keelen Copy To
W. M. McCulloch
A. H. Anderegg
ETC Files (2)

TORRANCE
SS-0007569

BAAB	
BBSC	
SENT TO	DATE

NOTIFIED

TENTATIVE HEARING

DATE

Department of Building and Safety

REQUEST FO... MODIFICATION OF BUILDIN... ORDINANCES or APPEAL FROM DETERMINATION OF SUPERINTENDENT OF BUILDING

FILE NO.
REFERENCE FILES

AUTHORITY

The Superintendent of Building has authority to grant slight modifications to the Building Ordinances provide... is compliance with the spirit and purpose of the Code. The Board of Building and Safety Commissioners has au... to hear appeals from determinations of the Superintendent of Building regarding the Building Ordinances.

INFORMATION: Please print or type form in quadruplicate.

JOB ADDRESS		LOT	BLOCK	TRACT
19821 S. Hamilton St., Los Angeles				
OWNER'S NAME: Shell Development Co.	TEL. NO. 323-3030		PERMIT NO. P-04030	
OWNER'S MAILING ADDRESS: P. O. Box 211, Torrance, California	ZIP CODE 90509		PLAN CHECK NO.	
PETITIONER'S NAME: Same as above	TEL. NO.		USE OF BUILDING: Laboratory	
PETITIONER'S ADDRESS	ZIP CODE		JOB STATUS	

REQUEST: Submit plans if necessary to illustrate request. Additional sheets or data may be attached.

CODE SEC.	
	See attachment No. 1

JUSTIFICATION: State why it is impractical to comply with ordinance. Additional sheets or data may be attac...

PETITIONER'S SIGNATURE [signature] POSITION [signature] DATE 4-27-73

DEPARTMENT ACTION: (IN ACCORDANCE WITH SECT. 98.0403 L.A.M.C.) 5-7-73

☐ **REQUEST GRANTED** (SEE ATTACHED LETTER).

☐ WRITTEN CONCURRENCE FROM THE FIRE DEPARTMENT IS REQUIRED.

☐ **REQUEST DENIED.** ACTION BY: ______ DEPT. OF BUILDING AND SAFETY DATE

APPEAL

To appeal a determination of the Superintendent of Building the fee indicated below must be paid and the o... must sign this appeal. In addition, the applicant must give reasons why he believes there was an error or abu... discretion by the Superintendent in the matter appealed. Only the items requested on this form will be consid... Address all communications to: Board of Building and Safety Commissioners, Room 412, City Hall, Los Ang... California 90012. Owner will be notified of the hearing date and time.

REASONS FOR APPEAL: Additional sheets or data may be attached.

TORRANCE
SS-0007570

...'s Signature (Must be the real party in interest—Bd. Res. No. 682) (NOTE: Agent's or representative's signature not acc...

[signature] DATE 4-27-73

DEPARTMENT USE ONLY	(CASHIER USE ONLY)
No. of Items	
Fee due	
Fee verified	

Attachment No. 1

The following apply to specific items covered in the "Not Approved" listing A-50636 and A-50637.

The items all concern an Ankerwerk Injection Molding Machine which is in intermittent use approximately 40 hours per month. The unit is only used for experimental tests in our Product Development Laboratory. We anticipate completion of our test program by 1975.

The unit was previously in service at the Shell, Emeryville, Californi Research Center for ca 10 years.

Item 17 Code Section 93.1101, approval of relays, fuse holders etc. by a recognized laboratory.

Justification:

The machine was built in Germany for American use. The control equipment, fuses, etc. have given trouble-free service over the years.

Items 19 & 20 Code Sections 93.6715 and 93.1101. Raceways not of approved type.

Justification:

The extruder is a packaged prewired machine. It contains a square tubular cast iron frame work which is used as a conduit for the control wiring. This protects the wiring from mechanical damage and oil and water contact. See picture No. 1.

Item 21 Code Section 93.3808, Relays less than 8" from the floor.

Justification:

The relays are in a prewired control cabinet, part of the packaged machine. The bottom of the lowest relays is 4" from the bottom of the box which is essentially on the floor level. See pictures 2 and 3.

SM-32-1 (Rev. 9-57)

REFERENCE

SHELL OIL COMPANY

24-9

DATE MAY 2, 1973

TO WESTERN TAX OFFICE

Attention Mr. M. V. Koski

FROM LEGAL DEPARTMENT
WEST COAST DIVISION

SUBJECT LOS ANGELES COUNTY SANITATION DISTRICT INDUSTRIAL WASTE WATER DISCHARGE SURCHARGE

With reference to the subject Surcharge, it is our understanding that you are preparing to furnish the County Sanitation District with a composite surcharge statement covering various Shell facilities. Attached hereto are copies of memoranda indicating the prospective surcharge (without taking the tax offset into consideration) for the current fiscal year applicable to the Wilmington Refinery, Elastomers Technical Center and the Dominguez Oil Field. It is our understanding that you also need similar information for the Signal Hill Oil Field.

By its copy of this memorandum, we are requesting the Land Department to secure appropriate data for the Signal Hill Field and furnish the same directly to you.

Should you have any further questions or need additional information, please contact the writer.

ORIGINAL SIGNED BY
J. H. FIELDS

JHF:DDB

Attachments

cc: West Coast Production Manager
WCD Land - B. G. Kerr
Wilmington Refinery Manager
Shell Development Company -
Elastomers Technical Center
A. H. Anderegg

THIS COPY FOR

SHELL DEVELOPMENT COMPANY
Elastomers Technical Center
RECEIVED
MAY 4 1973
TLK JGB RHM AHA KRA JTB JWC DWF WRK JC
To be handled by
Date completed
File

TORRANCE
SS-0007567

APPLICATION NO. C110019

NEW CONSTRUCTION
PERMIT FOR INDUSTRIAL WASTEWATER DISCHARGE
SANITATION DISTRICTS OF LOS ANGELES COUNTY
2020 Beverly Blvd., Los Angeles, Calif. 90057
John D. Parkhurst, Chief Engineer and General Manager

PERMIT NO. 305

24-9-3

SHELL RECEIVED MAY 9 1973

Los Angeles, Calif.* 11 / 21 / 72 (original) 2 / 28 / 73 (present)
MO. DAY YR.

APPLICATION IS HEREBY MADE BY* SHELL DEVELOPMENT COMPANY, a Division of Shell Oil Company (PRINT) (FIRM NAME) A

03 (Mailing Address) P. O. Box 211 (STREET) 05 Torrance (CITY) California (STATE) 90509 (ZIP) E

07 Tenant (OWNER, TENANT, ETC.) G of the property located at:

09 (Street) 19821 So. Hamilton Avenue (PRINT) 11 (City) Los Angeles, Calif. (Zip) 90502
(ADDRESS OF PROPERTY PRODUCING WASTEWATER DISCHARGE)

Assessors Map Book No. 7351 Page No.* 33 Parcel No.* 1 K
(LEGAL ADDRESS OF PROPERTY PRODUCING WASTEWATER DISCHARGE)

Through Shell Oil Dominguez Refinery effluent discharge.
(PRINT) (LOCATION OF POINT OF WASTEWATER DISCHARGE TO SEWERAGE SYSTEM)

for a Permit for Industrial Wastewater Discharge to the sewerage system.

13 Type of Industry* Research & Development (GENERAL DESCRIPTION) M, 17 2821 (FEDERAL SIC NOS.) Q

19 Number of Employees (Full Time)* 129 (Part Time)* 0 S

21 Raw Materials Used* Butadiene, Styrene, Isoprene U
(GENERAL DESCRIPTION – ADD ADDITIONAL SHEETS AS NEEDED)

Products Produced KRATON® (a synthetic rubber)
(GENERAL DESCRIPTION – ADD ADDITIONAL SHEETS AS NEEDED)

Wastewater Producing Operations Polymer solution washing and solvent stripping in coagulation operations. Cooling tower blowdown. Boiler plant blowdown. Laboratory sink drains.
(FULL DESCRIPTION – ADD ADDITIONAL SHEETS AS NEEDED)

31 Time of Discharge – * 24 hours/day AM/PM to _____ AM/PM, (WORKING DAY – CROSS OUT AM OR PM) Days per Week* (M) (T) (W) (Th) (F) (Sa) (Su) (CIRCLE DAYS)

* Wastewater Flow Rate* Critical parameter estimate 100,000 G/d AA (Gallons Per Day) Measured average 94,000 gal/day

Constituents of Wastewater Discharge Boiler and cooling tower treatment chemicals. Sodium hydroxide. Sodium Citrate.
(GENERAL DESCRIPTION – ATTACH CHEMICAL ANALYSES RESULTS TO THIS APPLICATION)

Person in company responsible for industrial wastewater discharge:

41 A. H. Anderegg (PRINT) (NAME) Manager Services Dept. (POSITION) 323-3030 (TELEPHONE NUMBER) BB

I affirm that all information furnished is true and correct and that the applicant will comply with the conditions stated on the back of this permit form.

Date February 28, 19 73

TORRANCE
SS-0007588

Signature for Applicant [signature] Manager Services Dept.
(COMPANY ADMINISTRATIVE OFFICIAL) (NAME) (POSITION)

Approved by City or County Official

Date April 17, 1973

For Dept. of County Engineers ..... ☐

City of Los Angeles ☑

Name [signature]

Position Sr. Sanitary Engineer

Approved by Sanitation Districts of Los Angeles County

Date MAR 10 1973

John D. Parkhurst, Chief Engineer and General Manager

by [signature]

Position SUPERVISOR IN CHARGE
INDUSTRIAL WASTE SECTION

Note: A permit fee may be required by the local City or County Agency.

... suspended or revoked

1/2/73

Dear Camden:

In going thru my files today I came upon this little treasure.

TORRANCE
SS-0007587

While AHA & I think it appropriate that I keep the original, (back end folder, second drawer from bottom, east file cabinet in my office), it might be desirable for you to have a copy just in case.

You must have a thick file on the efforts it took to get this.

L. E. HANSTEDT

SHELL DEVELOPMENT COMPANY
A DIVISION OF SHELL OIL COMPANY
P. O. BOX 211
TORRANCE, CALIFORNIA 90509

ELASTOMERS
TECHNICAL CENTER

TELEPHONE 323-3030
321-2340

24-9-2

July 13, 1973

Air Pollution Control District
County of Los Angeles
434 South San Pedro Street
Los Angeles, California 90013

Attention Mr. R. C. Murray

Gentlemen:

Enclosed is an "Application for Authority to Construct and Permit to Operate" for the construction of a dry crumb finishing development unit in Shell Development Company's Elastomers Technical Center (ETC) at Torrance.

A list of equipment is included with the process description, flow diagram, and plot plan which supplements the application. This list is provided to assist you in processing the application.

A check in the amount of $40.00 covering the application fee is attached.

Yours very truly,

R. H. Mann
for T. L. Keelen, Director
Elastomers Technical Center

Attachments

LEH:eb
bc: A. H. Anderegg
W. M. McCulloch
J. E. Gorman
L. E. Hanstedt
ETC File 24-9
Chron. File

Copy To

TORRANCE
SS-0007170

SHELL DEVELOPMENT COMPANY
ELASTOMERS TECHNICAL CENTER
TORRANCE, CALIFORNIA

LIST OF EQUIPMENT

Vessels No.	Name	Size	Capacity
V-98R	Cement Make-up Vessel	48" dia. x 86" high	
V-201 (formerly V-178)	Cement Surge Vessel	6' 0" dia. x 12' 0" T-T	2850 gal.
V-202	Solvent Surge Vessel	6' 0" dia. x 12' 0" T-T	2850 gal.
V-203	Coagulation Cyclone	12" dia. x 2' high	
V-204	Degasser	6" dia. x 20" high	
V-205	K. O. Pot	Binks	30 gal.
V-206	Degasser Crumb Cyclone	6" dia. x 20" high	
V-207	Coalescer	10 3/4" dia. x 48" long	
V-208	Water Entrainment Separator		
V-209	Water Entrainment Separator		

Pumps No.	Name	Capacity	Δ P	H.P.
P-201	Cement Circulation	0-10 GPM	50 PSIG	5 H.P.
P-202	Cement Feed	0-5 GPM	450 PSIG	5 H.P.
P-203	Cement Transfer	10-20 GPM	40 PSIG	5 H.P.
P-204	Cement Transfer	10-20 GPM	80 PSIG	5 H.P.

TORRANCE
SS-0007174

SHELL DEVELOPMENT COMPANY
ELASTOMERS TECHNICAL CENTER
TORRANCE, CALIFORNIA

LIST OF EQUIPMENT

Exchangers No.
E-201
E-202
E-203

Miscellaneous No.	Name
A-201	Shaker Screen
A-202	Cement Contactor
A-203	Cement Contactor
A-204	Rotary Lock Valve
A-205	Steam Nozzle Injector
A-206	Rotary Lock Valve
J-1	Primary Jet
J-2	Secondary Jet

SHELL DEVELOPMENT COMPANY
ELASTOMERS TECHNICAL CENTER
TORRANCE, CALIFORNIA

PROCESS DESCRIPTION

DRY CRUMB FINISHING DEVELOPMENT UNIT

This process will start in V-98R which is included in the equipment listed in APCD Permit No. P52543 covering the "Polymer Development Facility". V-98R will continue to be used in its original function but will also be used as proposed herein.

A polymer-solvent cement is prepared in V-98R and pumped to cement surge vessel V-201. Cement is kept warm in V-201 by circulating it through exchanger E-202. Cement is fed from V-201 to contactors A-202 and A-203 via heat exchanger E-201. The cement is then coagulated by contacting it with 500 psig steam in A-202 and A-203. The resultant mixture of solid polymer particles and steam-solvent vapor is separated in the coagulation cyclone V-203 and degasser V-204. The solid polymer is steam conveyed into degasser crumb cyclone V-206 and dropped into shaker screen A-201 where trace amounts of water are removed.

Solvent-steam vapors are removed from V-204 by steam jet J-1 and passed through V-205 where entrained crumb is removed. Both the water and the solvent are condensed in solvent condenser E-203 and dropped into solvent surge vessel V-202. V-202 is used as a surge vessel and a decanter to remove water from the system. The water is discharged to the effluent system. Solvent from V-202 is then passed through a coalescer V-207 to remove trace amounts of water. Solvent is then used to reconstitute the cement feed by blending it in V-98R with dry polymer from A-201.

Vents from V-201, V-202 and V-98R will go to the manual vent header and hence to the flare. A steam-air mixture from jet J-2 will go directly to the atmosphere. The rupture disc on V-203 will discharge to the atmosphere. Relief valve discharge from V-201, V-202, V-207 and V-98R will go to the flare via the emergency vent system.

DO NOT REMOVE CARBONS OR SEPARATE
[illegible] must be submitted.
Yes, a copy should be retained by applicant.

AIR POLLUTION CONTROL DISTRICT - COUNTY OF LOS ANGELES
434 SOUTH SAN PEDRO STREET, LOS ANGELES, CALIF. 90013 MADISON 9-4711

APPLICATION FOR AUTHORITY TO CONSTRUCT AND PERMIT TO OPERATE

APPLICATION INSTRUCTIONS

A. USE ONE APPLICATION FORM 400-A FOR EACH PERMIT UNIT OF BASIC EQUIPMENT AND ONE APPLICATION FORM 400-A FOR EACH PERMIT UNIT OF AIR POLLUTION CONTROL EQUIPMENT. CALL MA [illegible], EXT. [illegible] FOR ASSISTANCE.

B. A [illegible] FILING FEE MUST ACCOMPANY EACH APPLICATION. [illegible] FILING FEE WILL BE ACCEPTED FOR A CHANGE OF OWNERSHIP APPLICATION [illegible] THE TOTAL PERMIT FEE, WHICH MAY EXCEED THE [illegible] PERMIT TO OPERATE CAN BE GRANTED. MAKE CHECK OR MONEY ORDER PAYABLE TO: AIR POLLUTION CONTROL DISTRICT, COUNTY OF LOS ANGELES.

C. EACH APPLICATION MUST BE FILLED OUT COMPLETELY AND FILED IN TRIPLICATE. ACCOMPANYING PLANS MUST BE IN DUPLICATE.

D. EACH APPLICATION MUST BE SIGNED BY A RESPONSIBLE MEMBER OF THE ORGANIZATION THAT IS TO OPERATE THE EQUIPMENT.

INCOMPLETE APPLICATIONS NOT ACCEPTABLE

1A. PERMIT TO BE ISSUED TO:
SHELL DEVELOPMENT COMPANY, A Division of Shell Oil Company

1B.
NAME (OR NAMES) OF OWNER OR PRINCIPAL PARTNERS DOING BUSINESS AS (OR) ABOVE ORGANIZATION

2A. MAILING ADDRESS:
P. O. Box 211 — Torrance — California
NUMBER STREET — CITY OR COMMUNITY — STATE

2B. 90509
ZIP CODE

3A. EQUIPMENT LOCATION ADDRESS:
19821 South Hamilton Street — Los Angeles — 90502
NUMBER STREET — CITY OR COMMUNITY — ZIP CODE

3B. Del Amo Street
NEAREST INTERSECTING STREET

4. EQUIPMENT DESCRIPTION.
APPLICATION IS HEREBY MADE FOR AUTHORITY TO CONSTRUCT AND PERMIT TO OPERATE THE FOLLOWING EQUIPMENT:

"Dry crumb finishing" development unit.

5. IF THIS EQUIPMENT HAD A PREVIOUS WRITTEN PERMIT, STATE NAME OF CORPORATION, COMPANY, OR INDIVIDUAL OWNER THAT OPERATED THIS EQUIPMENT, AND STATE PREVIOUS AIR POLLUTION CONTROL DISTRICT PERMIT NUMBER.

NAME — PREVIOUS PERMIT NUMBER

6. PERMIT APPLICATION REASON:
16 NEW CONSTRUCTION [X] 1
ALTERATION [ ] 2
CHANGE OF LOCATION [ ] 3
CHANGE OF OWNERSHIP [ ] 4

7. TYPE OF ORGANIZATION:
17 CORPORATION [X] 1
PARTNERSHIP [ ] 2
INDIVIDUAL OWNER [ ] 3
GOV'T. AGENCY [ ] 4

8. ESTIMATED COST OF EQUIPMENT OR ALTERATION:
AIR POLLUTION CONTROL EQUIPMENT $ _____
BASIC EQUIPMENT $ _____

9. FOR THE NEW CONSTRUCTION, ALTERATION, TRANSFER OF OWNERSHIP OR LOCATION, WHAT IS THE
ESTIMATED STARTING DATE? July 16, 1973 ESTIMATED COMPLETION DATE? October 15, 1973

10. GENERAL NATURE OF BUSINESS:
Research Laboratory

11. SIGNATURE OF RESPONSIBLE MEMBER OF ORGANIZATION:
[signature]

13. OFFICIAL TITLE OF SIGNER:
Manager Services Department

12. TYPED OR PRINTED NAME OF SIGNER:
A. H. [illegible]

14. DATE:

15. PHONE NUMBER:
323-3030

ST. LIST NO. 2-6	I.D. NO.: 7-14	ALPHA LIST: 71-78	TS NO.: 79-80	CLASS: I [ ] II 18 III [ ]
ASSIGNMENT: 19-20	WORK UNITS: 21-24	APPLICATION NO.: [illegible]	EQUIP. CAT. NO.: [illegible]	TYPE: 46 B OR C

VALIDATION: [illegible]

TORRANCE
SS-0007177

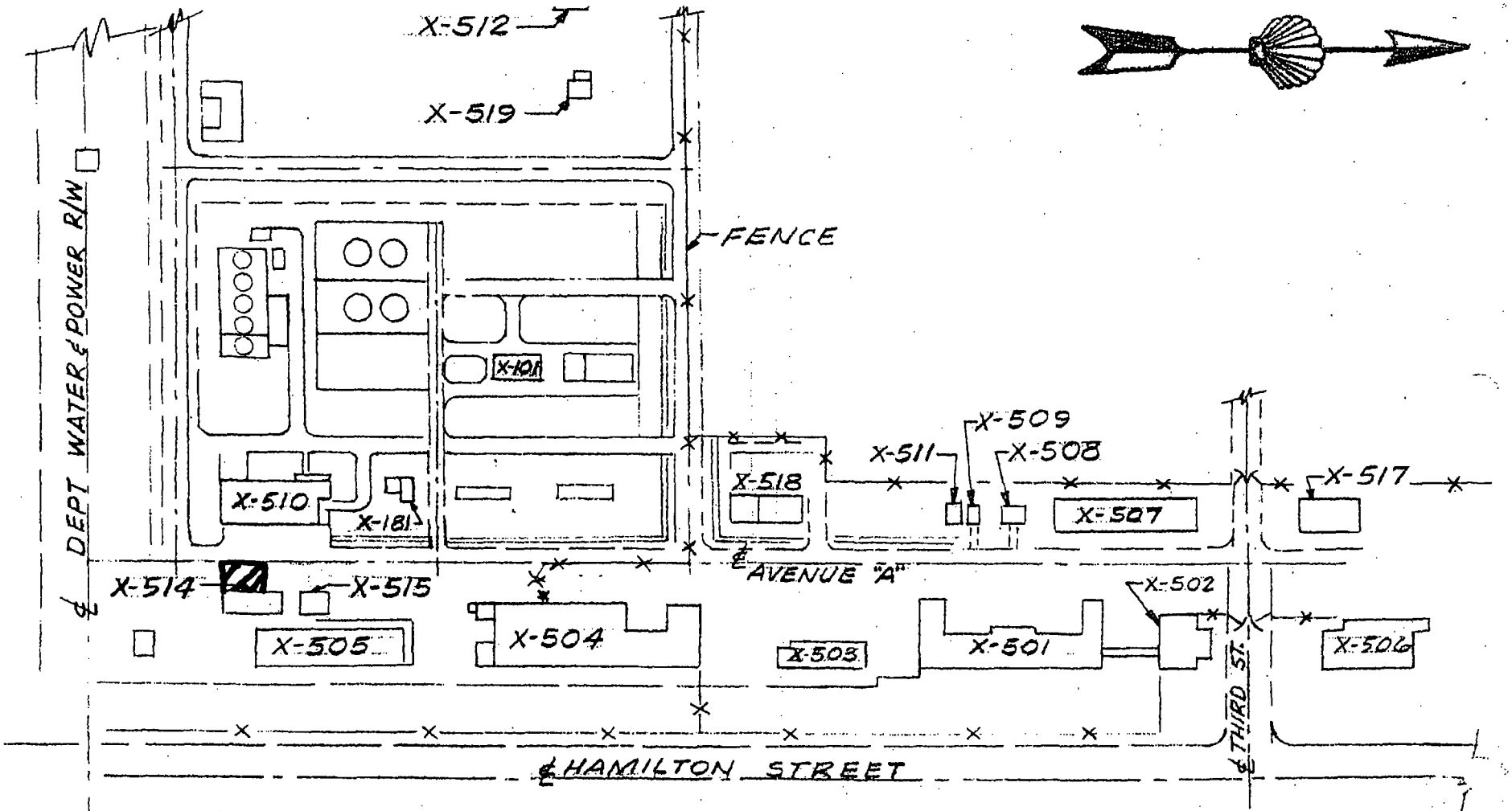

X-501 – ADMINISTRATION BLDG
X-502 – ADMINISTRATION ANNEX
X-503 – APPLICATIONS LABORATORY
X-504 – CENTRAL LABORATORY
X-505 – PILOT PLANT
X-506 – STORES
X-507 – CHANGE HOUSE
X-508 – STORAGE SHED Nº 1
X-509 – VAULT
X-510 – MACHINE HALL

X-511 – STORAGE SHED Nº 2
X-512 – WELDING SHED Nº 1
X-514 – PDF
X-515 – PDF FINISHING
X-517 – MACHINE SHOP
X-518 – INSTRUMENT-ELECTRICAL
X-519 – WELDING SHED Nº 2
X-181 – UTILITY CONTROL
X-101 – DISTILLATION CONTROL

3-7-73

BUILDING PLOT PLAN

SS-73-7159

SHELL DEVELOPMENT COMPANY
A DIVISION OF SHELL OIL COMPANY
P. O. BOX 211
TORRANCE, CALIFORNIA 90509

ELASTOMERS
TECHNICAL CENTER

TELEPHONE 323-3030
321-2340

249

August 10, 1973

Air Pollution Control District
County of Los Angeles
434 South San Pedro Street
Los Angeles, California 90013

Attention: Mr. R. C. Murray

Gentlemen:

Enclosed is an "Application for Authority to Construct and Permit to Operate" for alteration of the Vent Relief and Flare System, APCD Permit #P52545, by connections as described in application #77056 covering a dry crumb finishing development unit in Shell Development Company's Elastomers Technical Center (ETC) at Torrance.

Mr. Willard Ganther of APCD informed Mr. L. Hanstedt of Shell Development Company of the need for this application via telephone on August 9, 1973. The connections under consideration are described in application # A77056 now being processed in your office.

A check in the amount of $40.00 covering the application fee is attached.

Yours very truly,

T. L. Keelen, Director
Elastomers Technical Center

Attachments

LEH/sfb

bc: A. H. Anderegg
W. M. McCulloch
J. E. Gorman
L. E. Hanstedt
ETC File 24-9
Chron. File

TORRANCE
SS-0007169

DO NOT REMOVE CARBONS OR SEPARATE
Three white copies must be submitted
Yellow copy should be retained by applicant.

AIR POLLUTION CONTROL DISTRICT - COUNTY OF LOS ANGELES
434 SOUTH SAN PEDRO STREET, LOS ANGELES, CALIF. 90013 MADISON 9-4711

APPLICATION FOR AUTHORITY TO CONSTRUCT AND PERMIT TO OPERATE

APPLICATION INSTRUCTIONS

A. USE ONE APPLICATION FORM 400-A FOR EACH PERMIT UNIT OF BASIC EQUIPMENT AND ONE APPLICATION FORM 400-A FOR EACH PERMIT UNIT OF AIR POLLUTION CONTROL EQUIPMENT. CALL MA 9-4711, EXT. 66365 FOR ASSISTANCE.

B. A $40 FILING FEE MUST ACCOMPANY EACH APPLICATION. (A $20 FILING FEE WILL BE ACCEPTED FOR A CHANGE OF OWNERSHIP APPLICATION WHERE NO ALTERATION, ADDITION OR CHANGE OF LOCATION HAS OCCURRED.) THE TOTAL PERMIT FEE, WHICH MAY EXCEED THE $40 FILING FEE, MUST BE PAID BEFORE PERMIT TO OPERATE CAN BE GRANTED. MAKE CHECK OR MONEY ORDER PAYABLE TO: AIR POLLUTION CONTROL DISTRICT, COUNTY OF LOS ANGELES.

C. EACH APPLICATION MUST BE FILLED OUT COMPLETELY AND FILED IN TRIPLICATE. ACCOMPANYING PLANS MUST BE IN DUPLICATE.

D. EACH APPLICATION MUST BE SIGNED BY A RESPONSIBLE MEMBER OF THE ORGANIZATION THAT IS TO OPERATE THE EQUIPMENT.

INCOMPLETE APPLICATIONS NOT ACCEPTABLE

1A. PERMIT TO BE ISSUED TO:
SHELL DEVELOPMENT COMPANY, A Division of Shell Oil Company
BUSINESS LICENSE NAME OF ORGANIZATION THAT IS TO RECEIVE PERMIT

1B.
NAME (OR NAMES) OF OWNER OR PRINCIPAL PARTNERS DOING BUSINESS AS (dba) ABOVE ORGANIZATION

2A. MAILING ADDRESS: P. O. Box 211 (NUMBER, STREET, CITY OR COMMUNITY, STATE)
2B. 90509 (ZIP CODE)

3A. EQUIPMENT LOCATION ADDRESS: 19821 South Hamilton Street Los Angeles 90502 (NUMBER, STREET, CITY OR COMMUNITY, ZIP CODE)
3B. Del Amo Street (NEAREST INTERSECTING STREET)

4. EQUIPMENT DESCRIPTION.
APPLICATION IS HEREBY MADE FOR AUTHORITY TO CONSTRUCT AND PERMIT TO OPERATE THE FOLLOWING EQUIPMENT:
Alter Vent Relief and Flare System (APCD Permit # P52545) to provide connections for relief valves of dry crumb finishing development unit (APCD Application #A77056)

5. IF THIS EQUIPMENT HAD A PREVIOUS WRITTEN PERMIT, STATE NAME OF CORPORATION, COMPANY, OR INDIVIDUAL OWNER THAT OPERATED THIS EQUIPMENT, AND STATE PREVIOUS AIR POLLUTION CONTROL DISTRICT PERMIT NUMBER.
SHELL DEVELOPMENT COMPANY (NAME) P52545 (PREVIOUS PERMIT NUMBER)

6. PERMIT APPLICATION REASON:
16
- NEW CONSTRUCTION [ ] 1
- ALTERATION [X] 2
- CHANGE OF LOCATION [ ] 3
- CHANGE OF OWNERSHIP [ ] 4

7. TYPE OF ORGANIZATION:
17
- CORPORATION [X] 1
- PARTNERSHIP [ ] 2
- INDIVIDUAL OWNER [ ] 3
- GOV'T. AGENCY [ ] 4

8. ESTIMATED COST OF EQUIPMENT OR ALTERATION:
AIR POLLUTION CONTROL EQUIPMENT $ 1400.
BASIC EQUIPMENT $ ---

9. FOR THE NEW CONSTRUCTION, ALTERATION, TRANSFER OF OWNERSHIP OR LOCATION, WHAT IS THE
ESTIMATED STARTING DATE? ~~July 16, 1973~~ ESTIMATED COMPLETION DATE? ~~October 15, 1973~~

10. GENERAL NATURE OF BUSINESS:
Research Laboratory

11. SIGNATURE OF RESPONSIBLE MEMBER OF ORGANIZATION: → [signature]
13. OFFICIAL TITLE OF SIGNER: Manager, Services Department

12. TYPED OR PRINTED NAME OF SIGNER: A. H. Anderegg
14. DATE: 8/10/73
15. PHONE NUMBER: 323-3030

APCD USE ONLY

ST. LIST NO. 3-6	I.D. NO.: 7-14	ALPHA LIST: 71-78	IS NO.: 79-80	CLASS: I [ ] II [ ] III [ ] 18
ASSIGNMENT: 19-20 (UNIT, EMPL.)	WORK UNITS: 21-24 (A/C, P.O.)	APPLICATION NO.: 31-36	EQUIP. CAT. NO.: 38-45	TYPE: 46 B OR C

VALIDATION 25-29 (III)

TORRANCE
SS-0007170

STATE OF CALIFORNIA—RESOURCES AGENCY RONALD REAGAN, Governor

CALIFORNIA REGIONAL WATER QUALITY CONTROL BOARD—LOS ANGELES REGION

107 SOUTH BROADWAY, SUITE 4027
LOS ANGELES, CALIFORNIA 90012

This is about Ventura! JHC

SHELL DEVELOPMENT COMPANY
Fleetwood Technical Center
RECEIVED
AUG 22 1973
TLK JGB HM ANA KRA JTB RWC DWF WRK JC
To be handled by
Date completed
File

AUG 14 1973

None seen by me - [illegible] No record in [illegible]

Shell Chemical Company
P. O. Box 211
Torrance, California 90509

RE: Rescission of Waste Discharge Requirements (File 68-8) (CI 5426)

Gentlemen:

Reference is made to our letter dated July 11, 1973, which transmitted a draft of a proposed resolution rescinding requirements for the disposal of wastes from your Torrance facility.

Pursuant to Section 13263 of the California Water Code, this California Regional Water Quality Control Board, at its meeting held on July 26, 1973, considering all factors in the case, adopted Resolution No. 73-18 (copy enclosed) rescinding the requirements for this waste discharge.

If your plans change in the future and you should contemplate disposal of wates other than into a community sewer system, you will have to file a new report of proposed waste discharge with this Regional Board. In addition, you may also have to file for a National Pollutant Discharge Elimination System (NPDES) permit if the proposed discharge is to surface waters.

Very truly yours,

Raymond M. Hertel

RAYMOND M. HERTEL
Executive Officer

cc: Department of Water Resources
Department of Public Health, Bureau of Sanitary Engineering
Department of Fish and Game, Region 5
County Sanitation Districts of Los Angeles County
Los Angeles County Flood Control District
Los Angeles County Department of Health Services
Los Angeles County Engineer, Project Planning and Pollution Control
City of Los Angeles, Bureau of Sanitation
City of Los Angeles, Harbor Department
Central and West Basin Water Replenishment District
Western Oil and Gas Association
Environmental Protection Agency

Enclosure

TORRANCE
SS-0007459

State of California
Resources Agency
CALIFORNIA REGIONAL WATER QUALITY CONTROL BOARD, LOS ANGELES REGION

RESOLUTION NO. 73-18

RESCINDING CEASE AND DESIST ORDER AGAINST SHELL CHEMICAL COMPANY AND VARIOUS REQUIREMENTS FOR WASTE DISPOSAL WITHIN THE LOS ANGELES REGION
(Files 72-23, 51-21, 52-44, 57-198, 58-27, 59-210, 62-80, 63-74, 67-83, 68-8, 68-40, 71-28, 72-58, 56-165, 59-131, 60-123, 67-107, 67-6)

WHEREAS, on May 5, 1971, this Regional Board, in accordance with Section 13301 of the California Water Code, adopted Order No. 71-16, ordering Shell Chemical Company to cease and desist from discharging wastes to Ventura River from the company's Ventura Plant in violation of the requirements prescribed in Resolution No. 70-37; and

WHEREAS, Shell Chemical Company informed this Board on December 31, 1972, that the Ventura Plant would close in January 1973, and subsequent inspections have verified that discharge to Ventura River has ceased; and

WHEREAS, over the period since its formation this Regional Board has prescribed requirements for numerous proposed waste discharges which (1) never materialized; (2) for discharges which no longer occur; (3) for discharges which have since been connected to a community sewer system; or (4) for discharges combined with another discharge under Board requirements; and

WHEREAS, each of the requirements hereinafter listed is no longer pertinent for one or more of these reasons, particularly in the case where technical reports are required from discontinued or sewered discharges, or in the case where receiving water conditions and/or water quality policy have changed for a discharge not yet started; and

WHEREAS, the Board has caused its staff to investigate the requirements for the following and finds them to fall in one of the above categories:

Discharger-reason for rescission	Location-Type	Discharge to:	File No.	Resol. or Order Number
a) City of Long Beach Water Department (3)	Long Beach-filter backwash	Los Cerritos Channel	51-21	072-16
b) Shell Chemical Co. (2)	Ventura-industrial wastes	Ventura River	52-44	R70-37
c) Monterey Oil Co. (now Exxon Co., USA) (2)	Long Beach-oil field wastes	San Gabriel River	56-165	R56-48
d) Potlatch Forests, Inc. (3)	Pomona-paper mill wastes	San Jose Creek	57-198	R58-1
e) Theo. Hamm Brewing Co. (2)	Vernon-brewing plant waste water	East Compton Creek	58-27	R58-11

TORRANCE
SS-0007460

Rescinding Requirements

Discharger-reason for rescission	Location-Type	Discharge to:	File No.	Resol. or Order Number
f) Camarillo Ready-Mix Concrete, Inc. (now Valley Wide Associates) (2)	Camarillo-wash water	Ground	59-210	R60-24
g) Saticoy Lemon Assoc. (3)	Saticoy-citrus packing waste water	Ground	59-131	R60-16
h) Pack Motor Co. (now Frank Elliott Chrysler-Plymouth (2)	Whittier-car washing	Storm drain to Coyote Creek	60-123	R60-58
i) Hasa Products Co., Inc. (now Tint Corp.) (2)	Industry-industrial wastes	Ground	62-80	R62-79
✓ j) Shell Chemical Co. (2)	Ventura-industrial wastes	Ground	63-74	R63-36
k) Anchor Hocking Glass Corp. (3)	Vernon-cooking water	Storm drain to L.A. River	67-6	R67-1
l) Pacific Telephone and Telegraph Company (2)	Saticoy-air conditioner condensate	Ground	67-83	R67-34
m) The Richardson Co. of California (3)	Industry-industrial wastes	San Jose Creek	67-107	R68-1
✓ n) Shell Chemical Co. (2)	Torrance-industrial wastes	Dominguez Channel	68-8	R68-14
o) Getty Oil Co. (4)	Big Mountain Oil Field-oil field brines	Ground	68-40	R69-48
p) Gonzales Potato Co. (now Mattsenson Construction Co.) (3)	Oxnard-potato wash water	Ground	71-28	071-28
q) Athens Disposal Co. (2)	Alhambra-truck washing	San Pasqual Creek	72-23	072-23
r) Crosby and Overton Transportation Co.; G.L. Collins Corp. (1)	Long Beach-oil wastes	Ground	72-58	072-39

TORRANCE
SS-0007461

Rescinding Requirements

WHEREAS, the Board has transmitted a draft of this Resolution to the dischargers and to interested agencies and persons, and has notified them of its intent to rescind the cease and desist order and the other requirements at a public meeting to be held on July 26, 1973; and

WHEREAS, at that public meeting the Board heard and considered comments and correspondence pertaining to this matter;

NOW, THEREFORE, BE IT RESOLVED, that the following Resolutions or Orders, adopted on the dates indicated, are hereby rescinded:

Resolution No. or Order No.	Date Adopted
R 56-48	December 20, 1956
R 58-1	February 6, 1958
R 58-11	April 10, 1958
R 60-16	February 11, 1960
R 60-24	February 11, 1960
R 60-58	October 13, 1960
R 62-79	December 12, 1962
R 63-36	June 19, 1963 Ventura
R 67-1	March 1, 1967
R 67-34	December 13, 1967
R 68-1	February 21, 1968
R 68-14	February 21, 1968 Torrance
R 69-48	December 3, 1969
R 70-37	May 27, 1970 Ventura
O 71-28	July 21, 1971
O 71-16	May 5, 1971
O 72-16	April 19, 1972
O 72-23	May 31, 1972
O 72-39	September 13, 1972

BE IT FURTHER RESOLVED, that in accordance with Section 13260 of the Water Code of the State of California, each of the hereinbefore named dischargers is hereby notified that prior to initiation or resumption of the subject discharge (other than to a community sewer system or at a facility already under requirements) a report of proposed discharge must be filed with, and requirements obtained from, this Regional Board; and

BE IT FURTHER RESOLVED, that the Executive Officer of this Board be authorized, and he is hereby directed, to certify and submit copies of this resolution to each of the hereinbefore named dischargers, and to such individuals and governmental agencies as may have need therefor, or as may request same.

TORRANCE
SS-0007462

I, Raymond M. Hertel, Executive Officer, do hereby certify that the foregoing is a full, true, and correct copy of an order adopted by the California Regional Water Quality Control Board, Los Angeles Region, on July 26, 1973.

Raymond M. Hertel

RAYMOND M. HERTEL, Executive Officer

SC-1003 (Rev. 1-60)

REFERENCE

S ELL CHEMICAL COMPA Y

DATE NOVEMBER 1, 1973

TO LOCATION MANAGERS

FROM MANAGER - ENVIRONMENT AND SAFETY - PLANS & ANALYSIS - MANUFACTURING & DISTRIBUTION

SUBJECT NPDES PERMITS - APPROVED TEST PROCEDURES FOR ANALYSIS OF POLLUTANTS

SHELL DEVELOPMENT COMPANY
Elastomers Technical Center
RECEIVED
NOV 2 1973
CU12-2
TLK JGB RHM AHA KRA JTB JWC DWF WRH JC
To be handled by
Date completed
File

No action per acta
We are not applying for NPDES permit

We enclose copy of the subject publication in the FEDERAL REGISTER for October 16, 1973. The test methods and references specified herein are officially recognized by the Federal EPA when analyzing effluents for the purpose of:

1. Submitting an NPDES permit application.

2. Monitoring pursuant to an NPDES permit, or

3. Securing state certification of an NPDES permit.

Test methods and references are specified for 71 parameters or pollutants. For parameters where two or more references are listed, any one of the reference methods may be used.

If you decide that a test procedure not specified in the guidelines would be more appropriate for your location, a mechanism is set out in the publication for submission of this test procedure to the regulatory agency for approval. The application procedures are detailed in Sections 136.4 and 136.5 of the enclosure. Should your State Agency receive approval to issue NPDES permits, applications for revised test procedures should be submitted to them.

We would suggest that you compare your present test methods with those listed in the guidelines. If any of your test methods are not listed in the guidelines, you should either submit an application for approval of your test method(s) or take steps to implement the EPA approved test method(s). We would appreciate being kept informed of any plans to submit application(s) for alternative methods.

R L Maycock

VWW/gl

R. L. Maycock

Enclosure

cc - without enclosure

Manufacturing Representative - Houston/Norco/Dominguez
Manufacturing Representative - Geismar/Martinez
Manufacturing Representative - Woodbury/Marietta
Manufacturing Representative - Mobile/Denver (San Ramon)
Manufacturing Representative - Princeton (San Ramon)

TORRANCE
SS-0007374

federal register

TUESDAY, OCTOBER 16, 1973
WASHINGTON, D.C.

Volume 38 ■ Number 199

PART II

ENVIRONMENTAL PROTECTION AGENCY

■

WATER PROGRAMS

Guidelines Establishing Test Procedures for Analysis of Pollutants

TORRANCE
SS-0007375

Title 40—Protection of Environment

CHAPTER I—ENVIRONMENTAL PROTECTION AGENCY

SUBCHAPTER D—WATER PROGRAMS

PART 136—GUIDELINES ESTABLISHING TEST PROCEDURES FOR THE ANALYSIS OF POLLUTANTS

Notice was published in the FEDERAL REGISTER issue of June 29, 1973 (38 FR 17318) at 40 CFR 130, that the Environmental Protection Agency (EPA) was giving consideration to the testing procedures required pursuant to section 304(g) of the Federal Water Pollution Control Act Amendments of 1972 (86 Stat. 816, et seq., Pub. L. 92-500 (1972)) hereinafter referred to as the Act. These considerations were given in the form of proposed guidelines establishing test procedures.

Section 304(g) of the Act requires that the Administrator shall promulgate guidelines establishing test procedures for the analysis of pollutants that shall include factors which must be provided in: 1, any certification pursuant to section 401 of the Act, or 2, any permit application pursuant to section 402 of the Act. Such test procedures are to be used by permit applicants to demonstrate that effluent discharges meet applicable pollutant discharge limitations, and by the States and other enforcement activities in routine or random monitoring of effluents to verify effectiveness of pollution control measures.

These guidelines require that discharge measurements, including but not limited to the pollutants and parameters listed in Table I, be performed by the test procedures indicated; or under certain circumstances by other test procedures for analysis that may be more advantageous to use, when such other test procedures have the approval of the Regional Administrator of the Region where such discharge will occur, and when the Director of an approved State National Pollutant Discharge Elimination System (NPDES) Program (hereinafter referred to as the Director) for the State in which such discharge will occur has no objection to such approval.

The list of test procedures in Table I is published herein as final rulemaking and represents major departures from the list of proposed test procedures which was published in 38 FR 17318, dated June 29, 1973. These revisions were made after carefully considering all written comments which were received pertaining to the proposed test procedures. All written comments are on file and available for public review with the Quality Assurance Division, Office of Research and Development, EPA, Washington, D.C.

The principal revisions to the proposed test procedures are as follows:

1. Where several reliable test procedures for analysis are available from the given references for a given pollutant or parameter, each such test procedure has been approved for use for making the measurements required by sections 401 and 402 and related sections of the Act. Approved test procedures have been selected to assure an acceptable level of intercomparability of pollutants discharge data. For several pollutants and parameters it has still been necessary to approve only a single test procedure to assure this level of acceptability. This is a major departure from the proposed test procedures which would have required the use of a single reference method for each pollutant or parameter.

2. Under certain circumstances a test procedure not shown on the approved list may be considered by an applicant to be more advantageous to use. Under guidelines in §§ 136.4 and 136.5 it may be approved by the Regional Administrator of the Region where the discharge will occur, providing the Director has no objections. Inasmuch as there is no longer a single approved reference method against which a comparison can be made, the procedures for establishing such comparisons that were required by the proposed test procedures in § 130.4(b) have been deleted from this final guideline for test procedures for the analysis of pollutants.

3. A mechanism is also provided to assure national uniformity of such approvals of alternate test procedures for the analysis of pollutants. This is achieved through a centralized, internal review within the EPA of all applications for the use of alternate testing procedures. These will be reviewed and approved or disapproved on the basis of submitted information and other available information and laboratory tests which may be required by the Regional Administrator.

As deemed necessary, the Administrator will expand or revise these guidelines to provide the most responsive and appropriate list of test procedures to meet the requirements of sections 304(g), 401 and 402 of the Act, as amended.

These final guidelines establishing test procedures for the analysis of pollutants supersede the interim list of test procedures published in the FEDERAL REGISTER on April 19, 1973 (38 FR 9740) at 40 CFR Part 126 and subsequent procedures published on July 24, 1973 (38 FR 19894) at 40 CFR Part 124. Those regulations established interim test procedures for the submittal of applications under section 402 of the Act. Because of the importance of these guidelines for test procedures for the analysis of pollutants to the National Pollution Discharge Elimination System (NPDES), the Administrator finds good cause to declare that these guidelines shall be effective October 16, 1973.

JOHN QUARLES,
Acting Administrator.

OCTOBER 3, 1973.

PART 136—TEST PROCEDURES FOR THE ANALYSIS OF POLLUTANTS

Sec.
136.1 Applicability.
136.2 Definitions.
136.3 Identification of test procedures.
136.4 Application for alternate test procedures.
136.5 Approval of alternate test procedures.

AUTHORITY: Sec. 304(g) of Federal Water Pollution Control Act Amendments of 1972 86 Stat. 816, et seq., Pub. L. 92-500).

§ 136.1 Applicability.

The procedures prescribed herein shall, except as noted in § 136.5, be used to perform the measurements indicated whenever the waste constituent specified is required to be measured for:

(a) An application submitted to the Administrator, or to a State having an approved NPDES program, for a permit under section 402 of the Federal Water Pollution Control Act as amended (FWPCA), and,

(b) Reports required to be submitted by dischargers under the NPDES established by Parts 124 and 125 of this chapter, and,

(c) Certifications issued by States pursuant to section 401 of the FWPCA, as amended.

§ 136.2 Definitions.

As used in this part, the term:

(a) "Act" means the Federal Water Pollution Control Act, as amended, 33 U.S.C. 1314, et seq.

(b) "Administrator" means the Administrator of the U.S. Environmental Protection Agency.

(c) "Regional Administrator" means one of the EPA Regional Administrators.

(d) "Director" means the Director of the State Agency authorized to carry out an approved National Pollutant Discharge Elimination System Program under section 402 of the Act.

(e) "National Pollutant Discharge Elimination System (NPDES)" means the national system for the issuance of permits under section 402 of the Act and includes any State or interstate program which has been approved by the Administrator, in whole or in part, pursuant to section 402 of the Act.

(f) "Standard Methods" means *Standard Methods for the Examination of Water and Waste Water*, 13th Edition, 1971. This publication is available from the American Public Health Association, 1015 18th St. NW., Washington, D.C. 20036.

(g) "ASTM" means *Annual Book of Standards, Part 23, Water, Atmospheric Analysis, 1972*. This publication is available from the American Society for Testing and Materials, 1916 Race St., Philadelphia, Pennsylvania 19103.

(h) "EPA Methods" means *Methods for Chemical Analysis of Water and Wastes*, 1971, Environmental Protection Agency, Analytical Quality Control Laboratory, Cincinnati, Ohio. This publication is available from the Superintendent of Documents, U.S. Government Printing Office, Washington, D.C. 20402 (Stock Number 5501-0067).

§ 136.3 Identification of test procedures.

Every parameter or pollutant for which an effluent limitation is now specified pursuant to sections 401 and 402 of the Act is named together with test descriptions and references in Table I. The discharge parameter values for which reports are required must be de-

TORRANCE
SS-0007376

termined by one of the standard analytical methods cited and described in Table I, or under certain circumstances by other methods that may be more advantageous to use when such other methods have been previously approved by the Regional Administrator of the Region in which the discharge will occur, and providing that the Director of the State in which such discharge will occur does not object to the use of such alternate test procedures.

Under certain circumstances the Regional Administrator or the Director in the Region or State where the discharge will occur may determine for a particular discharge that additional parameters or pollutants must be reported. Under such circumstances, additional test procedures for analysis of pollutants may be specified by the Regional Administrator or Director upon the recommendation of the Director of the Methods Development and Quality Assurance Research Laboratory.

TABLE I—LIST OF APPROVED TEST PROCEDURES

Parameter and units	Method	References: Standard methods	ASTM	EPA methods
General analytical methods:				
1. Alkalinity as $CaCO_3$ mg $CaCO_3$/liter.	Titration: electrometric, manual or automated method—methyl orange.	p. 370	p. 143	p. 6. p. 8.
2. B.O.D. five day mg/liter.	Modified winkler or probe method	p. 489		
3. Chemical oxygen demand (C.O.D.) mg/liter.	Dichromate reflux	p. 495	p. 219	p. 17.
4. Total solids mg/liter	Gravimetric 103–105° C	p. 535		p. 280.
5. Total dissolved (filterable) solids mg/liter.	Glass fiber filtration 180° C			p. 275.
6. Total suspended (nonfilterable) solids mg/liter.	Glass fiber filtration 103–105° C	p. 537		p. 278.
7. Total volatile solids mg/liter.	Gravimetric 550° C	p. 536		p. 282.
8. Ammonia (as N) mg/liter.	Distillation—nesslarization or titration automated phenolate.			p. 134. p. 141.
9. Kjeldahl nitrogen (as N) mg/liter.	Digestion + distillation—nesslerization or titration utomated digestion phenolate.	p. 459		p. 149. p. 157.
10. Nitrate (as N) mg/liter.	Cadmium reduction; brucine sulfate; automated cadmium or hydrazine reduction.	p. 458 p. 461	p. 124	p. 170. p. 175. p. 185.
11. Total phosphorus (as P) mg/liter.	Persulfate digestion and single reagent (ascorbic acid), or manual digestion, and automated single reagent or stannous chloride.	p. 526 p. 532	p. 42	p. 235. p. 248. p. 359.
12. Acidity mg $CaCO_3$/liter	Electrometric end point or phenolphthalein end point.		p. 148	
13. Total organic carbon (TOC) mg/liter.	Combustion—infrared method [1]	p. 257	p. 702	p. 221.
14. Hardness—total mg $CaCO_3$/liter.	EDTA titration; automated colorimetric atomic absorption.	p. 179	p. 170	p. 78. p. 78.
15. Nitrite (as N) mg/liter.	Manual or automated colorimetric diazotization.			p. 185. p. 196.
Analytical methods for trace metals:				
16. Aluminum—total [2] mg/liter.	Atomic absorption	p. 210		p. 95.
17. Antimony—total [2] mg/liter.	Atomic absorption [4]			
18. Arsenic—total mg/liter.	Digestion plus silver diethyldithiocarbamate; atomic absorption. [3]	p. 65 p. 62		p. 18.
19. Barium—total [2] mg/liter.	Atomic absorption [4]	p. 210		
20. Beryllium—total [2] mg/liter.	Aluminon; atomic absorption	p. 67 p. 210		
21. Boron—total mg/liter	Curcumin	p. 69		
22. Cadmium—total [2] mg/liter.	Atomic absorption; colorimetric	p. 210 p. 422	p. 692	p. 101.
23. Calcium—total [2] mg/liter.	EDTA titration; atomic absorption	p. 84	p. 692	p. 102.
24. Chromium VI mg/liter.	Extraction and atomic absorption; colorimetric.	p. 429		p. 94.
25. Chromium—total [2] mg/liter.	Atomic absorption; colorimetric	p. 210 p. 426	p. 692 p. 403	p. 104.
26. Cobalt—total [2] mg/liter.	Atomic absorption [4]		p. 697	
27. Copper—total [2] mg/liter.	Atomic absorption; colorimetric	p. 210 p. 430	p. 692 p. 410	p. 106.
28. Iron—total [2] mg/liter	do	p. 210 p. 433	p. 692 p. 153	p. 108.
29. Lead—total [2] mg/liter	do	p. 210 p. 436	p. 692	p. 110.
30. Magnesium—total [2] mg/liter.	Atomic absorption; Gravimetric	p. 210 p. 416 p. 201	p. 692	p. 112.
31. Manganese—total [2] mg/liter.	Atomic absorption	p. 210	p. 692	p. 114.
32. Mercury—total mg/liter.	Flameless atomic absorption [5]			
33. Molybdenum—total [2] mg/liter.	Atomic absorption [4]			
34. Nickel—total [2] mg/liter.	Atomic absorption; colorimetric [4]	p. 443	p. 692	
35. Potassium—total [2] mg/liter.	Atomic absorption; colorimetric; flame photometric.	p. 233 p. 236	p. 328	p. 115.
36. Selenium—total mg/liter	Atomic absorption [5]			
37. Silver—total [2]	Atomic absorption [4]	p. 210		
38. Sodium—total [2] mg/liter.	Flame photometric; atomic absorption	p. 317	p. 328	p. 118.
39. Thallium—total [2] mg/liter.	Atomic absorption [4]			
40. Tin—total [2] mg/liter	do			
41. Titanium—total mg/liter.	do			
42. Vanadium—total [2] mg/liter.	Atomic Absorption; [4] Colorimetric	p. 187		
43. Zinc—total [2] mg/liter	Atomic Absorption; Colorimetric	p. 210 p. 444	p. 692	p. 120.
Analytical methods for nutrients, anions, and organics:				
44. Organic nitrogen (as N) mg/liter.	Kjeldahl nitrogen minus ammonia nitrogen.	p. 468		p. 149.
45. Ortho-phosphate (as P) mg/liter.	Direct single reagent; automated single reagent or stannous chloride.	p. 532	p. 42	p. 235. p. 246. p. 259.
46. Sulfate (as SO_4) mg/liter.	Gravimetric; turbidimetric; automated colorimetric—barium chloranilate.	p. 331 p. 334	p. 51 p. 52	p. 286. p. 288.
47. Sulfide (as S) mg/liter	Titrimetric—iodine	p. 551		p. 294.
48. Sulfite (as SO_3) mg/liter.	Titrimetric; iodide-iodate	p. 337	p. 261	
49. Bromide mg/liter	do		p. 216	
50. Chloride mg/liter	Silver nitrate; mercuric nitrate; automated colorimetric-ferricyanide.	p. 96 p. 97	p. 23 p. 21	p. 29. p. 31.
51. Cyanide—total mg/liter.	Distillation—silver nitrate titration or pyridine pyrazolone colorimetric.	p. 397	p. 555	p. 41.
52. Fluoride mg/liter	Distillation—SPADNS	p. 171 p. 174	p. 191	p. 64.
53. Chlorine—total residual mg/liter.	Colorimetric; amperometric titration	p. 382	p. 228	
54. Oil and grease mg/liter.	Liquid-Liquid extraction with trichlorotrifluoroethane.	p. 284		
55. Phenols mg/liter	Colorimetric, 4 AAP	p. 502	p. 445	p. 232.
56. Surfactants mg/liter.	Methylene blue colorimetric	p. 339	p. 619	p. 131.
57. Algicides mg/liter	Gas chromatography [6]			
58. Benzidine mg/liter	Diazotization—colorimetric [4]			
59. Chlorinated organic compounds (except pesticides) mg/liter.	Gas chromatography [6]			
60. Pesticides mg/liter [7]	Gas chromatography [6]			
Analytical methods for physical and biological parameters:				
61. Color platinum-cobalt units or dominant wave-length, hue, luminance, purity.	Colorimetric; spectrophotometric	p. 160 p. 302		p. 38.
62. Specific conductance mho/cm at 25° C.	Wheatstone bridge	p. 323	p. 168	p. 284.
63. Turbidity jackson units.	Turbidimeter	p. 350	p. 467	p. 308.

See Note at end of Table I

TORRANCE
SS-0007377

Parameter and units	Method	References: Standard methods	References: ASTM	References: EPA methods
64. Fecal streptococci bacteria number/100 ml.	MPN; membrane filter; plate count	p. 689 p. 690 p. 691		
65. Coliform bacteria (fecal) number/100 ml.	MPN: Membrane filter	p. 669 p. 684		
66. Coliform bacteria (total) number/100 ml.	do	p. 664 p. 679		
Radiological parameters:				
67. Alpha—total pCi/liter	Proportional counter; scintillation counter	p. 598	p. 509	
68. Alpha—counting error pCi/liter.	do	p. 598	p. 512	
69. Beta—total pCi/liter	Proportional counter	p. 598	p. 478	
70. Beta—counting error pCi/liter.	do	p. 598	p. 478	
71. Radium—total pCi/liter.	Proportional counter; scintillation counter	p. 611 p. 617	p. 674	

[1] A number of such systems manufactured by various companies are considered to be comparable in their performance. In addition, another technique, based on Combustion-Methane Detection, is also acceptable.

[2] For the determination of total metals the sample is not filtered before processing. Choose a volume of sample appropriate for the expected level of metals. If much suspended material is present, as little as 50-100 ml of well-mixed sample will most probably be sufficient. (The sample volume required may also vary proportionally with the number of metals to be determined.)

Transfer a representative aliquot of the well-mixed sample to a Griffin beaker and add 3 ml of concentrated distilled HNO_3. Place the beaker on a hotplate and evaporate to dryness making certain that the sample does not boil. Cool the beaker and add another 3 ml portion of distilled concentrated HNO_3. Cover the beaker with a watch glass and return to the hotplate. Increase the temperature of the hotplate so that a gentle reflux action occurs. Continue heating, adding additional acid as necessary until the digestion is complete, generally indicated by a light colored residue. Add (1:1 with distilled water) distilled concentrated HCl in an amount sufficient to dissolve the residue upon warming. Wash down the beaker walls and the watch glass with distilled water and filter the sample to remove silicates and other insoluble material that could clog the atomizer. Adjust the volume to some predetermined value based on the expected metal concentrations. The sample is now ready for analysis. Concentrations so determined shall be reported as "total".

[3] See D. C. Manning, "Technical Notes", Atomic Absorption Newsletter, Vol. 10, No. 6 p. 123, 1971. Available from Perkin-Elmer Corporation, Main Avenue, Norwalk, Connecticut 06852.

[4] Atomic absorption method available from Methods Development and Quality Assurance Research Laboratory, National Environmental Research Center, USEPA, Cincinnati, Ohio 45268.

[5] For updated method, see: Journal of the American Water Works Association 64, No. 1, pp. 20-26 (Jan. 1972) or ASTM Method D 3223-73, American Society for Testing and Materials Headquarters, 1916 Race St., Philadelphia, Pa. 19103.

[6] Interim procedures for algicides, chlorinated organic compounds, and pesticides can be obtained from the Methods Development and Quality Assurance Research Laboratory, National Environmental Research Center, USEPA, Cincinnati, Ohio 45268.

[7] Benzidine may be estimated by the method of M.A. El-Dib, "Colorimetric Determination of Aniline Derivatives in Natural Waters", El-Dib, M.A., Journal of the Association of Official Analytical Chemists, Vol. 54, No. 6, Nov., 1971, pp. 1383-1387.

[8] As a prescreening measurement.

§ 136.4 Application for alternate test procedures.

(a) Any person may apply to the Regional Administrator in the Region where the discharge occurs for approval of an alternative test procedure.

(b) When the discharge for which an alternative test procedure is proposed occurs within a State having a permit program approved pursuant to section 402 of the Act, the applicant shall submit his application to the Regional Administrator through the Director of the State agency having responsibility for issuance of NPDES permits within such State.

(c) Unless and until printed application forms are made available, an application for an alternate test procedure may be made by letter in triplicate. Any application for an alternate test procedure under this subchapter shall:

(1) Provide the name and address of the responsible person or firm making the discharge (if not the applicant) and the applicable ID number of the existing or pending permit, issuing agency, and type of permit for which the alternate test procedure is requested, and the discharge serial number.

(2) Identify the pollutant or parameter for which approval of an alternate testing procedure is being requested.

(3) Provide justification for using testing procedures other than those specified in Table I.

(4) Provide a detailed description of the proposed alternate test procedure, together with references to published studies of the applicability of the alternate test procedure to the effluents in question.

§ 136.5 Approval of alternate test procedures.

(a) The Regional Administrator of the region in which the discharge will occur has final responsibility for approval of any alternate test procedure.

(b) Within thirty days of receipt of an application, the Director will forward such application, together with his recommendations, to the Regional Administrator. Where the Director recommends rejection of the application for scientific and technical reasons which he provides, the Regional Administrator shall deny the application, and shall forward a copy of the rejected application and his decision to the Director of the State Permit Program and to the Director of the Methods Development and Quality Assurance Research Laboratory.

(c) Before approving any application for an alternate test procedure, the Regional Administrator shall forward a copy of the application to the Director of the Methods Development and Quality Assurance Laboratory for review and recommendation.

(d) Within ninety days of receipt by the Regional Administrator of an application for an alternate test procedure, the Regional Administrator shall notify the applicant and the appropriate State agency of approval or rejection, or shall specify the additional information which is required to determine whether to approve the proposed test procedure. Prior to the expiration of such ninety day period, a recommendation providing the scientific and other technical basis for acceptance or rejection will be forwarded to the Regional Administrator by the Director of the Methods Development and Quality Assurance Research Laboratory. A copy of all approval and rejection notifications will be forwarded to the Director, Methods Development and Quality Assurance Research Laboratory, for the purposes of national coordination.

[FR Doc.73-21466 Filed 10-15-73;8:45 am]

TORRANCE
SS-0007378

SHELL DEVELOPMENT COMPANY
A DIVISION OF SHELL OIL COMPANY
P. O. BOX 211
TORRANCE, CALIFORNIA 90509

ELASTOMERS
TECHNICAL CENTER

TELEPHONE 323-3030
321-2340

November 13, 1973

Air Pollution Control District
County of Los Angeles
434 South San Pedro Street
Los Angeles, California 90013

Attention Mr. John C. Mosher

Gentlemen:

We have completed and enclosed the Hazardous Pollutants survey form which you mailed to Shell Chemical Company at this address on October 30, 1973 along with the letter of transmittal. Please note that Shell Development Company, not Shell Chemical, now resides at this address.

We have listed the materials used in significant amounts in this facility. As we are a research and development organization, we use a large variety of compounds, containing the listed materials, in amounts ranging from less than a gram to several pounds per year. The wastes from this laboratory and pilot plant usage are disposed of in compliance with pertinent regulations.

If you have any questions, please contact Mr. A. H. Anderegg or Mr. L. E. Hanstedt at 323-3030 for additional information.

Yours very truly,

for T. L. Keelen, Director

Enclosures

LEH:eb

bc: J. H. Fields
A. H. Anderegg
L. E. Hanstedt
ETC Files

TORRANCE
SS-0007131

AIR POLLUTION CONTROL DISTRICT

COUNTY OF LOS ANGELES

434 SOUTH SAN PEDRO STREET / LOS ANGELES, CALIFORNIA 90013 MA 9-4711

Hazardous Pollutants Section 974-7581
-7582
-7450

ROBERT G. LUNCHE
ACTING AIR POLLUTION CONTROL OFFICER

Company Name Shell Development Co.
Elastomers Technical Center

Equipment Address 19821 South
Hamilton Avenue, Torrance, Calif.

SURVEY OF HAZARDOUS MATERIAL USE IN LOS ANGELES COUNTY, 1973

PLEASE FILL OUT FORM USING BACK IF NEEDED. FOR NON-USE CHECK HERE __ AND RETURN.

1. MATERIAL (Check even if only compounds or alloys, etc. are used.)

Antimony	Cobalt	Pesticides
Arsenic	Copper	Phosphorus
Asbestos	Fluorides	Radioactives
Barium	Lead	Selenium
Beryllium	*B Lithium	Tin
Boron	Manganese	Vanadium
Cadmium	*C Mercury	Yttrium
Chromium	*D Nickel	Zinc

*A Other triethyl aluminum (TEA)

* For code see attachment

2. FORM AS RECEIVED AND AS FINISHED. See attached

3. PROCESSING USED.

Casting	Grinding
Chemical Milling/Etching	Heating to °F.
Classifying (Size)	Machining
Crushing	Melting
Curing	Mixing (Dry or Wet)
Cutting or Shearing	Plating or Coating
Forming or Molding	Saving
X Other Process reactions for A, B, and D	Welding or Sweating

4. METHOD OF DISPOSAL OF SCRAP.

See attached

5. AVERAGE AMOUNT OF HAZARDOUS MATERIAL HANDLED OR PROCESSED, LB/MONTH

See attached

6. TYPE OF POLLUTION CONTROL?

See attached

TORRANCE
SS-0007132

Nov. 13, 1973 (Date)

(Signature of Responsible Official)

Mgr. Services (Title)

Name and phone no. of person to contact A. H. Anderegg 323-3030

SHELL DEVELOPMENT COMPANY
ELASTOMERS TECHNICAL CENTER
TORRANCE, CALIFORNIA

Response to County of Los Angeles

Hazardous Pollutants Section 974-7581
-7582
-7450

2. A = 15% solution in cyclohexane.

   B = Butyllithium in cyclohexane.

   C = Metallic mercury is stored in sealed containers, covered pots, and confined in switches and/or instruments. Mercuric sulfate is used in analysis at rate of about 1/2 lb/year.

   D = 12%w nickel as nickel octoate in cyclohexane.

4. A, B, and D removed from process as citrates and discharged with industrial waste water. Metallic mercury is reclaimed. Waste mercuric sulfate is disposed of per rules for disposal of hazardous chemicals.

5. A = 250 lb/mo as TEA.

   B = 30 lb/mo as butyllithium.

   C = Est. 5 lb/mo is handled but is reused.

   D = 350/400 lb/mo as nickel octoate.

6. A, B, and D = closed systems from supply containers thru process until discharged as citrates.

24-9-2

SHELL DEVELOPMENT COMPANY
A DIVISION OF SHELL OIL COMPANY
P. O. BOX 211
TORRANCE, CALIFORNIA 90509

TELEPHONE 323-3030
321-2340

ELASTOMERS
TECHNICAL CENTER

September 17, 1973

City of Los Angeles
Department of Water & Power
Principal Sanitary Engineer
P. O. Box 111, Room A-18
Los Angeles, California 90051

Attention Mr. George W. Adrian

Gentlemen:

Attached are certified test reports for two backflow prevention devices, Serial Numbers 711 and 712, on our domestic water system. The tests were made by Mr. J. E. Draper, Certified Tester No. 0320.

The Shell Chemical Company, Torrance Plant has been shut down and the land has been purchased by Cabot, Cabot & Forbes. However, Shell Development Company is continuing to operate an Elastomers Technical Center in the southeast portion of the former plant site. Future communications should be directed to the attention of Mr. William McCulloch, Senior Engineer, at the address below:

Shell Development Company
Elastomers Technical Center
P. O. Box 211
Torrance, California 90509

If there are any questions, please contact Mr. McCulloch or Mr. A. H. Anderegg at phone (213) 323-3030.

Yours very truly,

A. H. Anderegg
Manager Services

Attachments

WMM:eb

bc: T. L. Keelen (w/o attachments) ← Copy To
W. M. McCulloch (w/attachments)
ETC Files (w/attachments)

TORRANCE
SS-0007141

SHELL DEVELOPMENT COMPANY
A DIVISION OF SHELL OIL COMPANY
P. O. BOX 211
TORRANCE, CALIFORNIA 90509

ELASTOMERS
TECHNICAL CENTER

TELEPHONE 323-3030
321-2340

September 26, 1973

Air Pollution Control District
County of Los Angeles
434 South San Pedro Street
Los Angeles, California 90013

Attention Mr. W. C. Bailor

Gentlemen:

As required by Rule 62.1, we attach fuel usage data for the month of August 1973.

Very truly yours,

A. H. Anderegg, Manager
Services Department

LEH:eb

cc: L. E. Hanstedt
ETC Files ← Copy To

TORRANCE
SS-0007139

AIR POLLUTION CONTROL DISTRICT - COUNTY OF LOS ANGELES
434 SOUTH SAN PEDRO STREET, LOS ANGELES, CALIF. 90013

REPORT OF FUELS BURNED IN THE LOS ANGELES BASIN

COMPANY NAME (A) SHELL DEVELOPMENT CO., A DIVISION OF SHELL OIL MONTH OF AUGUST 1973

ADDRESS 19[illegible] SOUTH [illegible] AVE., LOS ANGELES, CALIF. 90502 (ZIP CODE) 322-3030 (TELEPHONE NO.)

TYPE OF COMBUSTION EQUIPMENT BOILERS (BOILER OR OTHER PROCESS HEATING EQUIPMENT)

DAY OF MONTH	SPECIFY TIME WHEN NATURAL GAS AS CURTAILED (B)		TYPE AND AMOUNT OF FUELS BURNED				
			LIQUEFIED PETROLEUM GAS, GALS.		FUEL OIL		
	FROM	TO	PROPANE	BUTANE	GALLONS	GRAVITY °API	SULFUR % BY WT.
1	NONE		NONE	NONE		36.1	< 0.5 ppm
2							
3							
4							
5							
6							
7							
8							
9							
10							
11							
12							
13							
14							
15							
16							
17							
18							
19							
20							
21							
22							
23							
24							
25							
26							
27							
28							
29							
30							
31							

TORRANCE
SS-0007140

TOTAL MONTHLY FUEL USE SUMMARY

[illegible]	[illegible]	BUTANE, GALS.	FUEL OIL, GALS.	NATURAL GAS, [illegible]
[illegible]	[illegible]	[illegible]	[illegible]	10,400

(A) SUBMIT SEPARATE FORM FOR EACH [illegible] LOCATION. (B) IF NO CURTAILMENT, INDICATE [illegible]

(FOR INFORMATION, CALL JULIAN [illegible], MADISON 9-4711)

SIGNATURE OF COMPANY REPRESENTATIVE [illegible] TITLE Manager Services

SHELL DEVELOPMENT COMPANY
A DIVISION OF SHELL OIL COMPANY
P. O. BOX 211
TORRANCE, CALIFORNIA 90509

ELASTOMERS
TECHNICAL CENTER

TELEPHONE 323-3030
321-2340

2-11-9-2

October 26, 1973

Air Pollution Control District
County of Los Angeles
434 South San Pedro Street
Los Angeles, California 90013

Attention Mr. W. C. Bailor

Gentlemen:

As required by Rule 62.1, we attach fuel usage data for the month of September 1973.

Very truly yours,

A. H. Anderegg, Manager
Services Department

Attachment

LEH:eb

cc: L. E. Hanstedt
ETC Files

Copy To

TORRANCE
SS-0007137

AIR POLLUTION CONTROL DISTRICT - COUNTY OF LOS ANGELES
434 SOUTH SAN PEDRO STREET, LOS ANGELES CALIF. 90013

REPORT OF FUELS BURNED IN THE LOS ANGELES BASIN

COMPANY NAME (A) SHELL DEVELOPMENT CO., A DIVISION OF SHELL OIL MONTH OF SEPTEMBER 19 73

ADDRESS 19821 SOUTH HAMILTON AVE., LOS ANGELES, CALIF. 90502 (ZIP CODE) 323-3030 (TELEPHONE NUMBER)

TYPE OF COMBUSTION EQUIPMENT BOILERS (BOILER OR OTHER PROCESS HEATING EQUIPMENT)

DAY OF MONTH	SPECIFY TIME WHEN NATURAL GAS WAS CURTAILED (B)		TYPE AND AMOUNT OF FUELS BURNED				
			LIQUEFIED PETROLEUM GAS, GALS.		FUEL OIL		
	FROM	TO	PROPANE	BUTANE	GALLONS	GRAVITY °API	SULFUR % BY WT.
1	NONE		NONE			36.1	< 0.5 ppm
2							
3							
4							
5							
6							
7							
8							
9							
10							
11							
12							
13							
14							
15							
16							
17							
18							
19							
20							
21							
22							
23							
24							
25							
26							
27							
28							
29							
30							
31							

TORRANCE
SS-0007138

TOTAL MONTHLY FUEL USE SUMMARY

FUEL TYPE	PROPANE, GALS.	BUTANE, GALS.	FUEL OIL, GALS.	NATURAL GAS, MCF
MONTHLY TOTAL	None	None	None	11,883

(A) SUBMIT SEPARATE FORM FOR EACH PLANT LOCATION. (B) IF NO CURTAILMENT, INDICATE "NONE".

(FOR INFORMATION, CALL JULIAN DORSEY, MADISON 9-4711)

SIGNATURE OF COMPANY REPRESENTATIVE A. H. Anderson TITLE Manager Services

Department of Water and Power the City of Los Angeles

TOM BRADLEY
Mayor

Commission
HENRY G. BODKIN, JR., *President*
KATHERINE B. DUNLAP
BURTON J. GINDLER
MICHAEL GLAZER
HERBERT C. WARD
MARY J. BORN, *Secretary*

ROBERT V. PHILLIPS, *General Manager and Chief Engineer*
PAUL H. LANE, *Chief Engineer of Water Works and Assistant Manager*
JAMES L. MULLOY, *Chief Electrical Engineer and Assistant Manager*
WILLIAM D. SACHAU, *Chief Financial Officer*

24-9-2

November 12, 1973

SHELL DEVELOPMENT COMPANY
Elastomers Technical Center
RECEIVED
NOV 14 1973
TLK, JGB, RHM, AHA, KRA, JTB, JWC, DWF, WRH, JC
To be handled by
Date completed
File

cc to Wilmington Treasury
they have one

Shell Chemical Corporation
Treasury Department
P. O. Box 211
Torrance, California 90507

Gentlemen:

This is to inform you that the fuel adjustment rate per kilowatt-hour for electric energy recorded from November 1 to November 3, 1973, inclusive, is an increment of $0.00319. The rate per kilowatt-hour from November 4 to November 29, 1973, inclusive, will be an increment of $0.00337.

The purchased water overriding unit adjustment per hundred cubic feet of water sold to all customers and billed from November 1 to December 31, 1973, inclusive, will be nil. This information is submitted in lieu of the usual notification mailed to you on a postal card. We will continue to advise you of the fuel and purchased water adjustment factors applicable to your future billings as we have in the past.

New electric rates effective November 4, 1973, will result in an increase in your future electric bills, including an increase in the fuel adjustment. Since 1957, all bills have been subject to the application of a fuel adjustment clause. Because in recent years fuel costs have been escalating rapidly, the Department, like other utilities, has had to revise the method of adjustment in order to recover those fuel costs which are not provided for in the regular rates. An electric rate ordinance is attached which describes in detail the A-1 rate which is applicable to your billing and which also describes the revised method of computing the adjustment for fuel costs on a monthly basis. The new water rate ordinance is also attached.

TORRANCE
SS-0007126

111 North Hope Street, Los Angeles, California ☐ *Mailing address:* Box 111, Los Angeles 90051
Telephone: (213) 481-4211 *Cable address:* DEWAPOLA

A combination of factors have contributed to the increase you will note in your future electric bills. We hope that a brief summary of these factors may help you understand why the increase is urgently required to provide electric service for existing customers and to plan and build new facilities for new electrical loads that will be required in the future to keep the economy strong, alleviate pollution, and continue to improve the living standards in this community.

The Department faces the same inflationary costs that concern you and all businessmen in our community. In addition, we face problems that are unique to the electric utility industry. In the past we could anticipate the unprecedented electrical growth in Los Angeles and locate conventional steam generation plants to meet that demand. As the efficiency of generation units improved and the size increased, we could, and did, hold down the price of electricity despite inflation.

Today the situation is drastically changed. Because of air pollution control standards, we cannot build additional plants in the Los Angeles Basin and have been forced to depend upon power generation sources hundreds of miles away. In addition, the high cost of air pollution control devices, even in remote desert areas, has contributed to the need for higher electric rates. At the same time that construction costs are skyrocketing, the price of fuel for generation in the Los Angeles Basin has increased at an even higher rate. A few years ago, natural gas supplied 75 percent of the Department's fuel requirement for steam generation. Now this energy source will decrease each year and no gas will be available for the Department's fuel needs by 1976. In the Los Angeles Basin, we are forced to use low-sulfur oil as a substitute fuel. At the same time, the price of this oil has increased during the last few years from less than $3 per barrel to $9 per barrel. In addition, the use of oil as a primary source of fuel involves the cost of marine terminals, pipelines, and storage facilities which formerly required relatively small investments. Other factors have also contributed to the increase in the cost of electricity, including higher interest cost on borrowed money, the cash flow involved in buying oil many months in advance of the return on the investment, and the increased cost of research and development which are mandatory to develop new sources of electrical energy not dependent upon fossil fuels.

While it may be of no comfort to you personally, the cost pressures that are resulting in increases in both the cost of electricity and water in Los Angeles are also resulting in rate increases throughout the nation and may be expected to continue to do so for some time. We at the Department will do everything possible to keep rates at the lowest possible level while adequately providing all the electric energy and water requirements of the City. We hope this brief summary will result in a better understanding of some of the reasons why your electric bills and, to a lesser degree your water bills, will increase.

If you have any further questions, please call our Rate Applications Unit, telephone 481-5901.

Sincerely,

Glenn J. Halverson

Glenn J. Halverson
Industrial Power Services Manager

GJH:cc

Enclosures

SHELL DEVELOPMENT COMPANY
A DIVISION OF SHELL OIL COMPANY
P. O. BOX 211
TORRANCE, CALIFORNIA 90509

ELASTOMERS
TECHNICAL CENTER

TELEPHONE 323-3030
321-2340

24-9-2

November 26, 1973

Air Pollution Control District
County of Los Angeles
434 South San Pedro Street
Los Angeles, California 90013

Attention Mr. W. C. Bailor

Gentlemen:

As required by Rule 62.1, we attach fuel usage data for the month of October 1973.

Very truly yours,

A. H. Anderegg, Manager
Services Department

Attachment

LEH:eb

bc: L. E. Hanstedt
ETC Files Copy 1

TORRANCE
SS-0007118

AIR POLLUTION NTROL DISTRICT - COUNTY O LOS ANGELES
434 SOUTH SAN PEDRO STREET. LOS ANGELES. LIF. 90013

REPORT OF FUELS BURNED IN THE LOS ANGELES BASIN

COMPANY NAME (A) SHELL DEVELOPMENT CO., A DIVISION OF SHELL OIL MONTH OF OCTOBER 1973

ADDRESS. 19821 SOUTH HAMILTON AVE., LOS ANGELES, CALIF. 90502 (ZIP CODE) 323-3030 (TELEPHONE NUMBER)

TYPE OF COMBUSTION EQUIPMENT BOILERS (BOILER OR OTHER PROCESS HEATING EQUIPMENT)

DAY OF MONTH	SPECIFY TIME WHEN NATURAL GAS WAS CURTAILED (B) FROM	TO	TYPE AND AMOUNT OF FUELS BURNED: LIQUEFIED PETROLEUM GAS, GALS. PROPANE	BUTANE	FUEL OIL GALLONS	GRAVITY °API	SULFUR % BY WT.
1	NONE		NONE			36.1	< 0.5 PER
2							
3							
4							
5							
6							
7							
8							
9							
10							
11							
12							
13							
14							
15							
16							
17							
18							
19							
20							
21							
22							
23							
24							
25							
26							
27							
28							
29							
30							
31							

TORRANCE
SS-0007119

TOTAL MONTHLY FUEL USE SUMMARY

FUEL TYPE	PROPANE, GALS.	BUTANE, GALS.	FUEL OIL, GALS.	NATURAL GAS, MCF
MONTHLY TOTAL	None	None	None	12,297

(A) SUBMIT SEPARATE FORM FOR EACH PLANT LOCATION. (B) IF NO CURTAILMENT, INDICATE "NONE"

(FOR INFORMATION, CALL JULIAN DORSEY, MADISON 9-4711)

SIGNATURE OF COMPANY REPRESENTATIVE A. H. Anderegg TITLE Manager Services

(SEE REVERSE FOR REMARKS)

SHELL DEVELOPMENT COMPANY
A DIVISION OF SHELL OIL COMPANY
P. O. BOX 211
TORRANCE, CALIFORNIA 90509

ELASTOMERS
TECHNICAL CENTER

TELEPHONE 323-3030
321-2340

24-9-2

November 28, 1973

Truesdail Laboratories, Inc.
4101 North Figueroa Street
Los Angeles, California 90065

Attention Mr. Zahner

Gentlemen:

Attached as requested are the two copies of your Laboratory Report No. 119732 of November 23, 1973 covering analysis of our industrial wastewater.

These are being returned for correction as discussed yesterday in a telephone conversation between myself and Mr. Zahner of your laboratories.

Thank you for your attention to this matter.

Yours very truly,

A. H. Anderegg
Manager Services

Attachments

LEH:AHA:eb

bc: T. L. Keelen
L. E. Hansted
ETC Files

Copy To

TORRANCE
SS-0007123

REPORT

TRUESDAIL LABORATORIES, INC.

CHEMISTS - MICROBIOLOGISTS - ENGINEERS
RESEARCH - DEVELOPMENT - TESTING

4101 N. FIGUEROA STREET
LOS ANGELES 90065
AREA CODE 213 • 225-1564
CABLE: TRUELABS

CLIENT: Shell Development Company
Post Office Box 211
Torrance, California 90509
Attn: Harry Hogue

DATE: November 23, 1973

RECEIVED: November 5, 1973

SAMPLE: Industrial Wastewater

LABORATORY NO. 119732

P.O. No.: ET-12674 KHT

INVESTIGATION: Analysis for 22 parameters in accordance with requirements of the Los Angeles Count Sanitation District.

RESULTS

pH at 16°C	10.41
Color (Pt. Co units)	25

	(Milligrams/Liter)
C.O.D.	294
Suspended Solids	28.0
Total Dissolved Solids	1130
Ammonia	2.4
Sulfide	0.003
Fluoride	10.1
Aluminum	10.0
Boron	0.46
Chromium	1.31
Copper	<0.002
Iron	0.20
Lead	<0.005
Mercury	<0.001
Nickel	2.25
Sodium	292.6
Zinc	0.10
Oil and Grease	8.9
Phenols	<0.05
Surfactants	0.35
Chlorinated Hydrocarbons	None Detected
Thiosulfate	2.5

TORRANCE
SS-0007124

Respectfully submitted,

TRUESDAIL LABORATORIES, INC.

Charlie A. Crutchfield
Technical Director

This re... or samples, investigated and is not necessarily indicative of the quality or condition of apparently identica... ual protection to clients, the public and these Laboratories, this report is submitted and accepted for the ... hom it is addressed and upon the condition that it is not to be used, in whole or in part, in any advertisin... ut prior written authorization from these Laboratories.

24-7 0

SHELL DEVELOPMENT COMPANY
A DIVISION OF SHELL OIL COMPANY
P. O. BOX 211
TORRANCE, CALIFORNIA 90509

TELEPHONE 323-3030
321-2340

ELASTOMERS
TECHNICAL CENTER

December 4, 1973

Mr. John D. Parkhurst
Chief Engineer and General Manager
County Sanitation Districts of Los Angeles County
2020 Beverly Boulevard
Los Angeles, California 90087

Dear Mr. Parkhurst:

We are attaching completed Los Angeles County Sanitation Districts Industrial Wastewater Critical Parameter Report Form #2. The submission of the report at this time was discussed via telephone on November 5, 1973 between Mr. Rorie of the Industrial Waste Section and Mr. L. E. Hanstedt of Shell Development. We anticipate receiving Critical Parameter Report #3 for submission by July 1, 1974 and will attempt to furnish the requested information.

We trust the enclosed information will satisfy your requirements. Should you have any questions, please contact Mr. A. H. Anderegg or Mr. L. E. Hanstedt at this location, telephone No. 323-3030.

Yours very truly,

for T. L. Keelen, Director

Attachment

Copy To

LEH:eb

bc: Shell Oil
Dominguez - Wilmington Refinery - Manager (w/attachment)
Tax Division - Los angeles (w/o attachment)

bbc: L. E. Hanstedt - w/attachment
A. H. Anderegg - w/attachment
ETC Files - w/attachment

TORRANCE
SS-0007363

M70309

SA TATION DISTRICTS OF LOS ANGELES CE JTY
INDUSTRIAL WASTEWATER
CRITICAL PARAMETER REPORT FORM

#2

	Ident. Code	PARAMETER 1/	2/	QUANTITY VALUES		Ident. Code	PARAMETER 1/	2/	QUANTITY VALUES		
100M	A	Flow (Total)	A	100M	gals/day	V	Manganese - Total			mg/l	
100	B	Flow (Peak)	A	100	gals/min.	W	Mercury - Total	A	<0.001	mg/l	<0.001
508	C	COD	A	294	mg/l	X	Molybdenum - Total			mg/l	
51.4	D	SS (Suspended Solids)	A	28.0	mg/l	Y	Nickel - Total	A	2.25	mg/l	3.66
10.35	E	pH	A	10.41	Units	Z	Selenium - Total			mg/l	
1357	F	Total Dissolved Solids	A	1130	mg/l	AA	Silver - Total			mg/l	
0.25	G	Ammonia (N)	A	2.4	mg/l	BB	Sodium - Total	A	292.6	mg/l	410
<0.01	H	Sulfide	A	0.003	mg/l	CC	Thallium - Total			mg/l	
	I	Cyanide			mg/l	DD	Tin - Total			mg/l	
0.09	J	Fluoride	A	1.0	mg/l	EE	Titanium - Total			mg/l	
3.07	K	Aluminum - Total	A	10.0	mg/l	FF	Zinc - Total	A	0.10	mg/l	0.52
	L	Antimony - Total			mg/l	GG	Oil & Grease (Hexane Extract)	A	8.9	mg/l	0.4
	M	Arsenic - Total			mg/l	HH	Phenols	A	<0.05	mg/l	<0.05
	N	Beryllium - Total			mg/l	II	Surfactants (MBAS)	A	0.35	mg/l	0.19
0.45	O	Boron - Total	A	0.46	mg/l	JJ	Chlorinated Hydrocarbons (except pesticides)	A	<0.01	mg/l	Chloform 0.019
	P	Cadmium - Total			mg/l						
1.16	Q	Chromium - Total	A	1.31	mg/l	KK	Pesticides (Chlor. Hycarb.)			mg/l	
	R	Cobalt - Total			mg/l	LL	Radioactivity (Alpha, Beta & Gamma)			pCi/l	
1.53	S	Copper - Total	A	<0.002	mg/l	MM	Temperature			Degrees °F	
1.64	T	Iron - Total	A	0.20	mg/l	NN	Color	A	25	Units	27
0.17	U	Lead - Total	A	<0.005	mg/l	OO	Thiosulfate (S)	A	2.5	mg/l	0.2

NON-CRITICAL PARAMETERS (Report When Available)					OTHER PARAMETERS (Report When Requested)			
PP	Calcium			mg/l	A1	11/21/1972 results in red		
QQ	Magnesium			mg/l	A2			
RR	Potassium			mg/l	A3			
SS	Barium			mg/l	A4			
TT	Nitrate			mg/l	A5			
UU	Chloride			mg/l	A6			
VV	Bromide			mg/l	A7			
WW	Sulfate			mg/l	A8			
XX	Phosphorus-Ortho			mg/l	A9			

TORRANCE
SS-0007364

NOTES: 1/ Report all critical parameters required by the Sanitation Districts and any other critical parameter known to be present in the wastewater. Those parameters required by the Districts but *known to be absent* from the wastewater may be reported by placing the word absent in the appropriate space.

2/ If values are obtained by measurements or analyses write A in this column. Analysis values must be determined, using representative 24-hour composite samples, by a State Certified or Districts Approved Laboratory. If values are obtained by estimate, write E in this column. *Estimated values are acceptable for new plants only.*

Truesdail Laboratories, Inc., 4101 No. Figueroa Street, Los Angeles, Calif. 90065
(Print) Name and Address of Laboratory Performing Analyses and Flow Measurements

Shell Development Company, Elastomers Technical Center 2821
(Print) Name of Company Having Wastewater Discharge SIC Number(s)

19821 South Hamilton Street, Los Angeles, California 90502
(Print) Address of Wastewater Discharge

Commingled into and discharged with effluent of Shell Oil Co., Dominguez, Calif.
(Print) Additional Location Data (Data above should be for only *one* discharge point to the sewerage system)

Statement of Accuracy of Data

I hereby affirm that the above data comprise a true and correct representation of the wastewater discharged from the stated discharge point.

Date: 12/4/73 Location: Los Angeles, California

(Signed) Name Manager Services Department
Position (Administrative Officer of Company with [illegible])

SHELL DEVELOPMENT COMPANY
A DIVISION OF SHELL OIL COMPANY
P. O. BOX 211
TORRANCE, CALIFORNIA 90509

ELASTOMERS
TECHNICAL CENTER

TELEPHONE 323-3030
321-2340

24-9-2

December 5, 1973

Land Division
Department of Water & Power
City of Los Angeles
P. O. Box 111, Terminal Annex
Los Angeles, California 90051

Attention Mr. Stanley J. Gallon
Chief Land Officer
Land Division

Gentlemen:

The following comments are in reference to the proposed license agreement to Shell Development Company for use of portions of the Department of Water and Power's Figueroa Junction-Halldale Transmission Line property, your File P58572.

1. Exhibit "A" should have the water line at station 13 + 70E indicated, also the name Hamilton Avenue should be substituted for Figueroa Street.

2. The Paragraph 11 cover requirement should be changed from 4 feet to 3 feet, as a previous license, P56530, required only 3 feet of cover.

3. We should like to make an addition to Paragraph 17. The period should be removed and the following should be added: "and all rights created thereunder, provided such cancellation does not in any manner affect the rights granted hereunder."

Should there be any questions concerning the above, feel free to contact Mr. W. M. McCulloch at this location. We are returning the original and one copy of the proposed license agreement.

Yours very truly,

T. L. Keelen

T. L. Keelen, Director

Attachments

bc : Shell Pipeline Co. - N. J. VonIgnatius
Shell West Coast Div. - Legal Dept. -
J. H. Fields

bbc: T. L. Keelen ← Copy To
A. H. Anderegg
W. M. McCulloch

TORRANCE
SS-0007120

24-9-2

SHELL DEVELOPMENT COMPANY
A DIVISION OF SHELL OIL COMPANY
P. O. BOX 211
TORRANCE, CALIFORNIA 90509

ELASTOMERS
TECHNICAL CENTER

TELEPHONE 323-3030
321-2340

December 11, 1973

Air Pollution Control District
County of Los Angeles
434 South San Pedro Street
Los Angeles, California 90013

Attention Mr. W. C. Bailor

Gentlemen:

As required by Rule 62.1, we attach fuel usage data for the month of November 1973.

Very truly yours,

A. H. Anderegg, Manager
Services Department

Attachment

LEH:eb

bc: L. E. Hanstedt ← Copy To
ETC Files

TORRANCE
SS-0007121

AIR POLLUTION CONTROL DISTRICT - COUNTY OF LOS ANGELES
434 SOUTH SAN PEDRO STREET, LOS ANGELES CALIF. 90013

REPORT OF FUELS BURNED IN THE LOS ANGELES BASIN

COMPANY NAME (A) SHELL DEVELOPMENT CO., A DIVISION OF SHELL OIL MONTH OF NOVEMBER 19 73

ADDRESS 19821 SOUTH HAMILTON AVE., LOS ANGELES, CALIF. 90502 (ZIP CODE) 323-3030 (TELEPHONE NUMBER)

TYPE OF COMBUSTION EQUIPMENT BOILERS (BOILER OR OTHER PROCESS HEATING EQUIPMENT)

DAY OF MONTH	SPECIFY TIME WHEN NATURAL GAS WAS CURTAILED (B)		TYPE AND AMOUNT OF FUELS BURNED				
			LIQUEFIED PETROLEUM GAS, GALS.		FUEL OIL		
	FROM	TO	PROPANE	BUTANE	GALLONS	GRAVITY °API	SULFUR % BY WT.
1	NONE		NONE		NONE	36.1	< 0.5 ppm
2							
3							
4							
5							
6							
7							
8							
9							
10							
11							
12							
13							
14							
15							
16							
17							
18							
19							
20							
21							
22							
23							
24							
25							
26							
27							
28							
29							
30							
31							

TORRANCE
SS-0007122

TOTAL MONTHLY FUEL USE SUMMARY

FUEL TYPE	PROPANE, GALS.	BUTANE, GALS.	FUEL OIL, GALS.	NATURAL GAS, MCF
MONTHLY TOTAL	None	None	None	13,006

(A) SUBMIT SEPARATE FORM FOR EACH PLANT LOCATION. (B) IF NO CURTAILMENT, INDICATE "NONE".

(FOR INFORMATION, CALL JULIAN DORSEY, MADISON 9-4711)

SIGNATURE OF COMPANY REPRESENTATIVE [signature] TITLE Manager Services

600556-R1

(USE REVERSE SIDE FOR REMARKS)

2074-2

Department of Water and Power the City of Los Angeles

TOM BRADLEY
Mayor

Commission
HENRY G. BODKIN, JR., *President*
KATHERINE B. DUNLAP
BURTON J. GINDLER
MICHAEL GLAZER
HERBERT C. WARD
MARY J. BORN, *Secretary*

ROBERT V. PHILLIPS, *General Manager and Chief Engineer*
PAUL H. LANE, *Chief Engineer of Water Works and Assistant Manager*
JAMES L. MULLOY, *Chief Electrical Engineer and Assistant Manager*
WILLIAM D. KACHAL, *Chief Financial Officer*

December 13, 1973

In reply refer to
our file P-58572

Shell Development Company
P. O. Box 211
Torrance, California 90509

Attention: Mr. T. L. Keelen
Director

Gentlemen:

Enclosed is a revised License Agreement per your letter request dated December 5, 1973.

Please sign the original and copy of the License Agreement and return them to this office with your check in the amount of $330, representing the first year's payment. After further processing, you will receive the original License Agreement for your records.

A stamped self-addressed envelope is enclosed for your convenience.

Very truly yours,

STANLEY J. GALLON
Chief Land Officer
Land Division

FK:ah
Enc.

SHELL DEVELOPMENT COMPANY
Emeryville Technical Center
RECEIVED
DEC 14 1973
To be handled by
Date completed
File

111 North Hope Street, Los Angeles, California ☐ *Mailing address:* Box 111, Los Angeles 90051
Telephone: (213) 481-4211 *Cable address:* DEWAPOLA

TORRANCE
SS-0007115

24-7

STATE OF CALIFORNIA—HEALTH AND WELFARE AGENCY

RONALD REAGAN, Governor

DEPARTMENT OF HEALTH
744/714 P STREET
SACRAMENTO, CALIFORNIA 95814

MAY 10 1974

NOTICE OF ANNUAL FEE DUE

SHELL DEVELOPMENT/DIV SHELL OIL
P O BOX 211
TORRANCE CA 90509
ATTN A R BEAN
RADIATION SAFETY OFFICER

0559-70
$320 7
07/25/74

SHELL DEVELOPMENT COMPANY
Elastomers Technical Center
RECEIVED
MAY 9 1974
C 06-9
TLW JGB RHM AHA KRA JTB JWC DWF WRH EC ARB JC
To be handled by
Date completed
File

Your California radioactive material license number, the amount of the annual license fee, and the date on which that fee becomes due, are listed on the right side of the address label above. Please follow the instructions in *either*, paragraph 1 or paragraph 2 below:

1. If you wish to continue the license in effect after the date shown, please remit the fee prior to that date. Your check should be made payable to the California Department of Health, and, in order to assure proper crediting of your payment, must be attached to the enclosed copy of this notice. Fee payments should be mailed to:

   Department of Health
   Radiologic Health Section - Licensing
   P. O. Box 1525
   Sacramento, CA 95807

2. If you wish to terminate the license as of the date shown, you need not remit the fee, but you must request termination of the license by completing the "PLEASE TERMINATE" box at the bottom of the teturn copy of this form. The request must be submitted prior to the date on the address label, and should be mailed to:

   Department of Health
   Radiologic Health Section
   744 P Street
   Sacramento, CA 95814

   Since the license may not be terminated while any licenseable material remains in your possession, you must transfer such material to another licensee authorized to possess it. Please state the name and license number of the transferee in the space provided.

Thank you.

RADIOLOGIC HEALTH SECTION
Radioactive Materials Licensing

Covered by P/O - written week of May 28 ada

PLEASE TERMINATE the license. All radioactive material has been used or has been transferred to:

_____ License No. _____

Date _____ Signature _____

RH 2587 (9/73)

TORRANCE

M70209

SANITATION DISTRICTS OF LOS ANGELES COUNTY
INDUSTRIAL WASTEWATER
CRITICAL PARAMETER REPORT FORM #3

Ident. Code	PARAMETER 1/	2/	QUANTITY VALUES		Ident. Code	PARAMETER 1/	2/	QUANTITY VALUES	
A	Flow (Total)		100M	gals/day	V	Manganese - Total			mg/l
B	Flow (Peak)		100	gals/min.	W	Mercury - Total		< 0.001	mg/l
C	COD		288	mg/l	X	Molybdenum - Total			mg/l
D	SS (Suspended Solids)		18.4	mg/l	Y	Nickel - Total		1.73	mg/l
E	pH		9.50	Units	Z	Selenium - Total			mg/l
F	Total Dissolved Solids		1433	mg/l	AA	Silver - Total			mg/l
G	Ammonia (N)		3.31	mg/l	BB	Sodium - Total		345	mg/l
H	Sulfide		< 0.001	mg/l	CC	Thallium - Total			mg/l
I	Cyanide			mg/l	DD	Tin - Total			mg/l
J	Fluoride		1.56	mg/l	EE	Titanium - Total			mg/l
K	Aluminum - Total		1.52	mg/l	FF	Zinc - Total		0.15	mg/l
L	Antimony - Total			mg/l	GG	Oil & Grease (Hexane Extract)		4.7	mg/l
M	Arsenic - Total			mg/l	HH	Phenols		< 0.05	mg/l
N	Beryllium - Total			mg/l	II	Surfactants (MBAS)		0.64	mg/l
O	Boron - Total		0.15	mg/l	JJ	Chlorinated Hydrocarbons (except pesticides)	Chloroform		1.15
P	Cadmium - Total			mg/l			Trichloroethylene		0.43
Q	Chromium - Total		1.74	mg/l	KK	Pesticides (Chlor. Hycarb.)			mg/l
R	Cobalt - Total			mg/l	LL	Radioactivity (Alpha, Beta & Gamma)			pCi/l
S	Copper - Total		0.03	mg/l	MM	Temperature			Degrees °F
T	Iron - Total		1.07	mg/l	NN	Color		40	Units
U	Lead - Total		< 0.01	mg/l	OO	Thiosulfate (S)		6.1	mg/l

NON-CRITICAL PARAMETERS (Report When Available)					OTHER PARAMETERS (Report When Requested)			
PP	Calcium			mg/l	A1			
QQ	Magnesium			mg/l	A2			
RR	Potassium			mg/l	A3			
SS	Barium			mg/l	A4			
TT	Nitrate			mg/l	A5			
UU	Chloride			mg/l	A6			
VV	Bromide			mg/l	A7			
WW	Sulfate			mg/l	A8			
XX	Phosphorus-Ortho			mg/l	A9			

TORRANCE
SS-0007851

NOTES: 1/ Report all critical parameters required by the Sanitation Districts and any other critical parameter known to be present in the wastewater. Those parameters required by the Districts but *known to be absent* from the wastewater may be reported by placing the word absent in the appropriate space.

2/ If values are obtained by measurements or analyses write A in this column. Analysis values must be determined, using representative 24-hour composite samples, by a State Certified or Districts Approved Laboratory. If values are obtained by estimate, write E in this column. *Estimated values are acceptable for new plants only.*

Truesdail Laboratories, Inc., 4101 No. Figueroa Street, Los Angeles, Calif. 90065
(Print) Name and Address of Laboratory Performing Analyses and Flow Measurements

Shell Development Company, Elastomers Technical Center
(Print) Name of Company Having Wastewater Discharge — SIC Number(s)

19821 South Hamilton Street, Los Angeles, California 90502
(Print) Address of Wastewater Discharge

Commingled into and discharged with effluent of Shell Oil Co., Dominguez, Calif.
(Print) Additional Location Data (Data above should be for only *one* discharge point to the sewerage system)

Statement of Accuracy of Data

I hereby affirm that the above data comprise a true and correct representation of the wastewater discharged from the stated discharge point.

Date: 7/5/74 Location: Los Angeles, California

(Signed) Name — Manager Services Department
Position (Administrative Officer of Company with Wastewater Discharge)

SD 32 (Rev. 4-67)—Printed in U.S.A.

REFERENCE

SHELL DEVELOPMENT COMPANY

DATE JULY 5, 1974 24-9-2

TO LOS ANGELES - SHELL OIL COMPANY - LEGAL DEPARTMENT MANAGER

FROM DIRECTOR - ELASTOMERS TECHNICAL CENTER

SUBJECT APCD PERMITS

Enclosed are two copies of a form letter dated June 28, 1974 from the Air Pollution Control District, County of Los Angeles. Please show that this is a change of name/address only and have signed by an appropriate person as legal counsel.

The following permits were issued to Shell Chemical Corporation, A Division of Shell Oil Company, and are still active under the name of Shell Development Company, Division of Shell Oil Company.

Permit No.	Title
A-3741	Isoprene polymerization pilot plant
A-07017	Pilot plant batch distillation unit
A-07660	Alters A-3741
A-12799	Polyisoprene latex pilot plant
P-4435	Adds V-98R to A-12799
P-41390	Pilot plant feed purification system
P-42364	Solution polymer research unit
P-50709	Polymer coagulator system

All other active permits were issued to Shell Development Company, Division of Shell Oil Company.

Please contact Mr. L. E. Hanstedt of Shell Development Company (323-3030) if any additional information is required.

Please provide the ETC with a copy of the completed form letter and a copy of any correspondence you have with the APCD on this matter so that our files will be complete.

For T. L. Keelen

Copy To

LEH:eb
Enclosures

bc: L. E. Hanstedt
ETC Files

TORRANCE
SS-0007852

COUNTY OF LOS ANGELES DEPARTMENT OF HEALTH SERVICES
COMMUNITY HEALTH SERVICES
313 NORTH FIGUEROA STREET, LOS ANGELES, CALIFORNIA 90012 • PHONE 974-7711

24-A

RALPH R. SACHS, M.D., M.P.H.
Deputy Director

June 17, 1975

Shell Development Company
A Division of Shell Oil Company
P. O. Box 211
Torrance, CA 90509

Attention: A. R. Bean
Radiation Safety Officer

Gentlemen:

Subject: California Radioactive Materials License No. 0559-70

Your letter of May 2, 1975, and your termination notice dated May 28 satisfy the requirements of Section 30298 of the California Radiation Control Regulations.

Our inspection on June 11, 1975 disclosed no remaining radioactive materials or radioactive contamination in your facilities at 19821 South Hamiliton Street, Torrance. You may consider this communication a release of those facilities for uncontrolled use as defined by Section 30258 (d) and (y) of the Regulations.

If we can be of further service to you in matters of radiation safety, please contact us at (213) 974-7891.

Very truly yours,

MARTIN D. FINN, M.D., M.P.H.
Acting Deputy Director

Jack C. Rogers

Jack C. Rogers, Director
Occupational and Radiation Management

JCR:BAA:gg

cc: RHS-Sacramento

SHELL DEVELOPMENT COMPANY
Elastomers Technical Center
RECEIVED
JUN 20 1975
TLK
RHM
AHA
JTB
DWF
ETC
ACH
WRH
ARB
JC
To be handled by
Date completed
File

TORRANCE
SS-0005936

24-7

SHELL DEVELOPMENT COMPANY
A DIVISION OF SHELL OIL COMPANY
P. O. BOX 211
TORRANCE, CALIFORNIA 90509

ELASTOMERS
TECHNICAL CENTER

TELEPHONE 323-3030
321-2340

May 2, 1975

Mr. Joseph H. Karbus, Director
Radiological Health Division
County of Los Angeles Health Department
313 North Figueroa Street
Los Angeles, California 90012

Dear Mr. Karbus:

In preparation for our impending transfer to Houston all radioisotopes have been removed from our location. The radioisotope sample prepartion area, Room 43 of Building X-504, and the two radioisotope sample storage lockers have been decontaminated. Meter survey and wipe tests were performed and analyzed by a certified radiation health agency; copies of results are enclosed. Upon receiving the March 10 report we decontaminated the high tritium count areas. Subsequent wipe samples were analyzed; the April 24 report of results indicate lack of contamination.

We request inspection to verify that area can be released for uncontrolled use.

The sealed sources, foils for gas chromatograph units, will be packaged in the instruments and will be shipped per D.O.T. requirements to the new location in Houston.

We intend to terminate our license No. 0559-70 when we vacate before July 1.

Yours very truly,

for T. L. Keelen
Director

Attachments

bc: (w/o attachments)
T. L. Keelen Copy To
K. R. Arnold
Supervisors
D. G. Vredenburgh
A. R. Bean
ETC Files

TORRANCE
SS-0005937

SANITATION DISTRICTS OF LOS ANGELES COUNTY
INDUSTRIAL WASTEWATER
CRITICAL PARAMETER REPORT FORM #4

Ident. Code	PARAMETER 1/	2/	QUANTITY VALUES		Ident. Code	PARAMETER 1/	2/	QUANTITY VALUES	
A	Flow (Total)		72M	gals/day	V	Manganese - Total			mg/l
B	Flow (Peak)		80	gals/min.	W	Mercury - Total		< 0.001	mg/l
C	COD		38	mg/l	X	Molybdenum - Total			mg/l
D	SS (Suspended Solids)		1.8	mg/l	Y	Nickel - Total		< 0.02	mg/l
E	pH		9.2	Units	Z	Selenium - Total			mg/l
F	Total Dissolved Solids		374	mg/l	AA	Silver - Total			mg/l
G	Ammonia (N)		1.7	mg/l	BB	Sodium - Total		80	mg/l
H	Sulfide		< 0.01	mg/l	CC	Thallium - Total			mg/l
I	Cyanide			mg/l	DD	Tin - Total			mg/l
J	Fluoride		1.20	mg/l	EE	Titanium - Total			mg/l
K	Aluminum - Total		0.57	mg/l	FF	Zinc - Total		0.75	mg/l
L	Antimony - Total			mg/l	GG	Oil & Grease (Hexane Extract)		2.5	mg/l
M	Arsenic - Total			mg/l	HH	Phenols		< 0.05	mg/l
N	Beryllium - Total			mg/l	II	Surfactants (MBAS)		0.17	mg/l
O	Boron - Total		0.12	mg/l	JJ	Chloroform		0.13	mg/l
P	Cadmium - Total			mg/l		Trichloroethylene		0.18	mg/l
Q	Chromium - Total		2.90	mg/l		Trichloroethane		0.011	mg/l
R	Cobalt - Total			mg/l	KK	Pesticides (Chlor. Hydrocb.)			mg/l
S	Copper - Total		0.04	mg/l	LL	Radioactivity (Alpha, Beta & Gamma)			pCi/l
T	Iron - Total		1.24	mg/l	MM	Temperature			Degrees °F
U	Lead - Total		< 0.01	mg/l	NN	Color		40	Pt-Co Units
					OO	Thiosulfate (S)		< 1	mg/l

NON-CRITICAL PARAMETERS (Report When Available)				OTHER PARAMETERS (Report When Requested)			
PP	Calcium		mg/l	A1			
QQ	Magnesium		mg/l	A2			
RR	Potassium		mg/l	A3			
SS	Barium		mg/l	A4			
TT	Nitrate		mg/l	A5			
UU	Chloride		mg/l	A6			
VV	Bromide		mg/l	A7			
WW	Sulfate		mg/l	A8			
XX	Phosphorus-Ortho		mg/l	A9			

NOTES: 1/ Report all critical parameters required by the Sanitation Districts and any other critical parameter known to be present in the wastewater. Those parameters required by the Districts but *known to be absent* from the wastewater may be reported by placing the word absent in the appropriate space.

2/ If values are obtained by measurements or analyses write A in this column. Analysis values must be determined, using representative 24 hour composite samples, by a State Certified or Districts Approved Laboratory. If values are obtained by estimate, write E in this column. *Estimated values are acceptable for new plants only.*

Truesdail Laboratories, Inc., 4101 No. Figueroa Street, Los Angeles, Calif. 90065
(Print) Name and Address of Laboratory Performing Analyses and Flow Measurements

Shell Development Company, Elastomers Technical Center
(Print) Name of Company Having Wastewater Discharge — SIC Number(s)

19821 South Hamilton Street, Los Angeles, California 90502
(Print) Address of Wastewater Discharge

Commingled into and discharged with effluent of Shell Oil Co., Dominguez, Calif.
(Print) Additional Location Data (data above should be for only one discharge point to the sewerage system)

Statement of Accuracy of Data

I hereby affirm that the above data comprise a true and correct representation of the wastewater discharged from the stated discharge point.

Date: 7/11/75 Location: Los Angeles, California

(Signed) Name — Manager Services Department
Position (Administrative Officer of Company with Wastewater Discharge)

FROM WASHINGTON EPA
TO ALL REGIONS

General Effluent Guidance for All
Industrial Categories

The following guidance on special technical considerations in the application of limitations, and on effluent limitations for specific parameters, is to be used as appropriate in writing permits for applications in all industrial categories.

General

The guidance documents were developed to cover, as specifically as possible, the identified industrial categories. The numbers previously developed and the information contained herein were meant to apply generally to the industrial category but more specifically to "major", "large", or more significant dischargers. Additional information on other considerations (i.e., economic, age) will be forthcoming. This should not materially effect your priorities. However, should a problem arise that requires additional consideration, please contact the appropriate headquarters individual. You will find, as you probably already have, that the guidance does not lend itself to all situations involving "special" problems of age and economic impact, etc., for a given category.

pH

The normal range in which all discharges should fall is generally accepted to be between a pH of 6 and a pH of 9. Any discharge outside of this range should be well justified and should consider such things as the addition of total dissolved solids from neutralization and the buffering capacity of the receiving water. If the pH of the discharge is significantly different than the pH of the receiving water within the 6.0 to 9.0 range and the discharge is a significant portion of the receiving water, toxic effects due to pH fluctuations within this range can be shown. Therefore, it is imperative that the discharge be evaluated carefully even within the range of 6.0 to 9.0, (e.g., 7.0 $\pm$ 0.5).

Coliform

This is a significant parameter for mixtures of industrial wastewater and sewage and may be significant for certain industrial wastewaters alone. Because of the sewering of most plants, the absence of sewage should be established by dye test. If sewage is present, the following effluent limit should be imposed:

> "Organisms isolated in the fecal coliform test shall not exceed 1000 organisms per 100 ml."

Total Dissolved Solids

Total dissolved solids have not been limited in the individual guidance documents. There is technology available for the removal of total dissolved solids when receiving water quality so dictates.

Oil and Grease

Permit conditions for petroleum-based Oil and Grease, based on the Standard Methods (13th Edition, Method 137) are to reflect an achievable concentration of 10 mg/l as the basis for determining limitations.

This limitation should be imposed where appropriate across industrial categories. If petroleum-based oil and grease is not present in the characteristic discharge, the limitation may be eliminated. Oil and grease analysis may also be used to detect oily materials of animal and vegetable origin. The limitation of oil and grease in these instances should be applied with caution. Vegetable or animal based oil and grease is generally less significant than petroleum based oil and grease at the same levels.

Toxicity

National standards for toxicity limitations via bioassay procedures have not been set. Certain States require bioassay procedures which will be incorporated in our discharge permits when those states include the requirement as part of certification under Section 401. A list of toxic substances and standards will be promulgated under Section 307 of the Act.

Heavy Metals

A general limitation of 1 mg/l maximum total dissolved heavy metals should not be imposed across the board. The figure is, however a good point of reference when establishing limits for a discharge involving a number of dissolved heavy metals which could present a hazard to water quality due to synergistic toxic effects.

Utility Discharges, Thermal Energy

For practical purposes, thermal limitations are most significant when applied to once through non-process contact cooling water, and treated effluent. This includes both manufacturing industry and power generating industry.

The industrial effluent limitation guidance addresses "process wastewaters" only, which have come into intimate contact with raw material, products, byproducts, etc., and include all wastewaters containing significant amounts of non-thermal pollutants. Typically, these streams require biological or physical treatment to reduce the content of specific constituents. When the resulting "treated effluent" contains thermal energy, additional considerations and limitations may be necessary.

Included in this definition of "process wastewaters" are cooling tower blowdown, boiler water blowdown, water treatment plant backwashings and once through process contact (e.g., barometric condenser) cooling water. However, limitations to be applied to constituents of these components of "process waters" are generally not contained in existing guidance.

Relative to pollutant reduction in utility water components of "process wastewaters", each case should be evaluated individually. Further definition of "best practicable control technology currently available" in this area has been undertaken by contract studies under Effluent Guidelines Division of Office of Water Programs.

The combination of cooling water and treated process water effluent prior to introduction into the receiving water is permissible. In instances where monitoring of the combined flows will not provide adequate information because of a concentration below a detectable limit, monitoring may be required prior to the combination of process flows and non-contact cooling water flows. Where once through non-contact cooling water is collected with process wastewaters in combined sewers, no allowance may be given that would condone the dilution of the plant raw waste load and result in a higher pollutant discharges allowance.

Once-through cooling water that does not come into contact with process material (shell and tube heat exchangers) discharging into segregated sewers may be excluded from the accounting of pollutants (excepting thermal) limited in the permit where source of water is the receiving stream. In such cases, thermal considerations should be applied taking into account applicable Water Quality Standards and using the guidance afforded in the Thermal Technical Manual forwarded earlier in draft form. Monitoring for possible contamination should be required, especially where saline cooling water is used. Due to the corrosive properties of saline water, corrosion products may be significant. The logic for excluding once through non-contact cooling water from pollutant limitation accounting is based upon net/gross considerations relative to influent constituents, and upon the 'practicability' of treatment to reduce very low pollutant levels":

TORRANCE
SS-0007500

Typically large quantities of water relative to process leakage result in concentrations not appreciably higher than supply water characteristics, and so low as to produce dubious analytical results.

Unless a specific violation of Water Quality Standards results, such low concentrations would not ordinarily be expected to have a significant or adverse impact on the receiving water.

In the absence of adverse impact (i.e., violation of Water Quality Standards) on the receiving water, the benefit of treating such large quantities of water (especially for net pollutant reduction) does not justify the cost.

Color

Color is generally an aesthetic problem. Where a specific problem is evident, limitations may be set on a case-by-case basis based upon receiving water quality.

Net and Gross

Generally a discharger is not responsible for pollutants entering with his water supply if he takes water from the same source into which he is discharging. If his source is other than the receiving stream, he is to be charged with the gross discharge.

Unless industry specifically requests application of net considerations in writing, or unless the difference between net and gross is of major significance to a discharger, the permit should be written on a gross basis with no stipulation for influent values. Where the differences between net and gross application of effluent guidance is of relatively minor significance but industry requests application of net values, the supply water waste loading should be stipulated based on presentation of existing data (i.e., adjust limitation accordingly and write permit in gross terms.) Limitations that are established for materials that are normally expected to be "concentration controlled" (e.g., TSS and BOD) may not need total credit for influent levels (a well designed clarifier will generally produce a quality effluent - 20 mg/l ss - regardless of source of suspended solids). Where application of net values is of great significance to the dischargers, permit requirements for sampling the influent wasteloadings must be included.

Pollutants that are removed in the treatment of water in an industrial facility (e.g., silt removal, filter backwash) may not be returned to the receiving water. Once a pollutant is removed by the discharger it may not be reintroduced. In this situation net/gross considerations will be applied downstream of any pretreatment steps.

TORRANCE
SS-0007501

Disposal of Pollutants into Wells

If an applicant for a permit proposes to dispose of pollutants into wells as part of a program to meet the proposed terms of a permit, additional terms and conditions should be specified in the permit which either prohibit the proposed disposal or control the disposal so as to prevent pollution of ground and surface waters and to protect the public health and welfare. The Administrator's decision statement number five, February 6, 1973, "Environmental Protection Agency Policy on Subsurface Emplacement of Fluids by Well Injection" should be consulted and complied with.

Standard Conditions

The provided standard permit conditions will be included in each permit in the order and language given. Additional conditions necessary to meet state certification requirements will follow the standard special conditions in the permit. State requirements which exceed national requirements will generally be adopted for National Pollutant Discharge Elimination System permits written for discharges in the State. Please note, however, that only those State requirements included in the certification (Sec. 401 of the Act) must be adopted. Recommendations can be accepted for cause. In this manner, terms and conditions of dubious legal or technical validity, or that would tend to impede enforcement may possibly be screened out.

Limitations

Permits are to be written with limitations in terms of kilograms (pounds) of each pollutant per day excepting in certain industries (such as mining operations and utility discharges) where wastewater generation is not related to production levels. The monthly operating average effluent limitation, in kilograms (pounds) per day, should be calculated using the production basis multiplied by the appropriate effluent level as specified in the guidance. It is not our intent to specifically limit water use in the permit unless the flow is so high as to cause a scouring problem in the receiving water. Once a permit has been issued based on the use of effluent volume, production levels, and attainable abatement technology, the discharger may meet his requirement via any combination of effluent volume and concentration providing he does not violate water quality standards in so doing. If a discharger drastically reduces his water usage he may augment receiving water diffusion capacity to prevent localized toxic effects or take advantage of improved treatability to reduce pollutant discharge, at his option, within the life of the permit.

The basis for limitations shall be:

1. Monthly average, expressed in kilograms (pounds) of pollutant per day which is the total of each pollutant discharged in a calendar month divided by the number of days the production facility operated that month.

2. Daily maximum, expressed in kilograms (pounds) per day.

Maximum daily limitations have not been statistically established for all industrial categories. It is our intent that the discharge limitations developed from the guidance and other considerations be a monthly operating average and a daily maximum. Variations from this operating average will be monitored and used as a basis for judgment of the performance of the discharger and to establish statistical variability. When statistically reliable data is available, a maximum variation will be established on that basis. Until such is the case, a general limitation for individual composite data shall be established that is no more than 3 times the average limitation (200% over) where water quality considerations do not prevail. Discharges may be limited singly or as a group or a combination of single discharges and groups or totally for the plant depending on the engineering judgment of the reviewer. It may be necessary to know the source of each discharge before making such a judgment. In any case, the total allowance of pollutant limitations should not exceed that calculated for the total plant production capability. Monitoring programs and compliance schedules should be consistent with approach chosen.

Production Figures to be Used in Permit Writing

A manufacturer should not be limited to less than full utilization of actual installed production capability. However, do not allow the purpose of effluent limitations to be circumvented by overstatements of production capability. The manufacturer is responsible for meeting the permit requirements without regard to seasonal variations in treatment efficiency, production levels, or product mix.

Therefore, the "production" figure can be either product or raw material as appropriate; shall be based on plant production capability whether by engineering evaluation or production history; and shall be based on the normal equipment operating schedule.

Where production units are separated, but utilize a common treatment facility, production will be evaluated for the production complex as a whole. One permit would be written for the production complex, covering all discharges to receiving water individually or combined as appropriate.

Where "production" is based on product, the total produced (including that shipped out of plant and/or placed in inventory) will be used. Similarly, where raw material (not including process chemicals) usage is the basis, the total processed will be used. In either case, assume a reasonable product mix which most fully utilizes installed equipment.

For complex facilities, the capacity will be limited by the unit process which controls production, e.g., if an intermediate process can only supply 75 units to a downstream operation with a capability of 100 units, then the overall capability is 75 units unless purchased intermediate material is introduced. The determination, further, should be based on a normal operating schedule, e.g., shifts per week. There may be cases where increased production requirements are anticipated, and will be met by a heavier operating schedule (running the equipment more shifts per week). The heavier operating schedule may be used in defining plant capacity, but should be supported by market projections, production schedules, etc., that demonstrate the intent.

The production figure arrived at in this manner should not be an unreasonable deviation from historical actual production.

In any event, the manufacturer can apply for re-issuance of his permit based on increased production. As a rule-of-thumb, this should only be necessary when the contemplated production increase would cause overloading of treatment facilities, resulting in violation of the effluent limitations in the permit.

Level A and Level B

Minimum levels of treatment (B Level) were originally proposed in recognition of the economic hardship implicit in redirecting a pollution abatement program already under construction. However, setting specific minimum limitations for all industry raised the possibility of an implied benefit to dischargers only recently providing treatment. In addition, subsequent amplification of "best practicable control technology currently available" requires consideration of economic cost benefit relationships, as well as engineering aspects, non-water quality oriented environmental impact and others.

The primary mechanism of relief will be reflected in compliance schedules terminating with acheivement of Level A guidance by July 1, 1977. The most important consideration in using Level A and Level B is to remind the discharger that Level A values are to be met as a minimum requirement by July 1, 1977, by all dischargers.

Permit Duration

Permits may be issued for periods up to five years. If a discharger is expected to achieve A levels by July 1, 1977, and he commits to a program to accomplish this, he will expect a permit of extended duration, i.e., five years. Short term permits, e.g., less than 3-5 years, should be issued only in those situations where there is a significant water quality problem that may not be resolved or where the technology for pollution abatement is not, in your opinion, sufficient, or where the discharger is not sure of the success of his planned program. In these instances the permit should be written to terminate 9 months after the conclusion of the compliance plan.

Settleable Solids

The presence of settleable solids in treated effluent can show biological system misfunction and clarifier misoperation, assuming it is well designed. The absence of settleable solids can therefore indicate continuing operational stability. Analysis for settleable solids may be a useful monitoring tool to supplement and, to a certain extent, reduce the frequency of BOD_5 and suspended solids analyses, thus providing greater operational control.

Staged Discharge

There may be instances where variability in receiving water flow (either regulated or natural causes) precludes discharge of even very highly treated wastewater due to stream quality considerations during low flow periods. In such instances, treated wastewater may be stored for discharge when receiving water considerations allow it. The discharge permit may therefore contain supplemental conditions permitting discharge in regulated amounts. In any case the total weight of individual pollutants so scheduled shall not exceed an appropriate limitation based on production capability.

Batch, Seasonal and Intermittent Operations

Batch, seasonal, and intermittent operations will be limited in the same terms as are continuous operations, i.e., a monthly operating average and a daily maximum, each expressed in pounds per day of individual pollutants. It may also, however, be necessary to set a limit on the rate of discharge in terms of pounds per hour in order to prevent violation of receiving water quality standards due to slug discharge.

TORRANCE
SS-0007505

The rationale is based upon the essential logic in the discussion of 'production capability' plus a general condition in each permit requiring that the permittee operate the treatment facilities efficiently at all times. No attempt should be made to specify the days upon which a discharge is authorized.

Monitoring and Self Reporting

Separate guidance has been written for monitoring and self reporting. Generally the approach is that the permittee notify the regulatory agency in the event of violation of a daily maximum limitation (in which case, if immediate telephone notification is required, a 24-hour telephone number should be supplied), and that the permittee shall monitor and report routinely at such a frequency as to assure management and the regulatory agency that abatement programs are being implemented and the permit terms and conditions observed. Any discharge characteristics that are limited should be monitored, not necessarily all at the same frequency. Avoid limiting the same characteristic by more than one limitation; for instance, oxygen demand by BOD_5, COD and TOD.

Compliance Schedules

Proposed or tentative compliance schedules should be expressed in months elapsed from the effective date of the permit until the permit is issued at which time specific dates should be typed into the schedules. Interim limitations for 'immediate' compliance (e.g., one month from effective date) should be imposed as necessary and desirable in order to either abate an "imminent hazard to public health or safety" or because it is feasible to abate the discharge immediately. Compliance with other limitations may require installation of waste treatment facilities, which would require additional implementation and compliance schedules.

It should be noted that a pollution abatement program for a complex industrial facility may involve installation of more than one treatment facility. Our interest is in the end result, not on the design or program planning, excepting insofar as total compliance is achieved in a timely manner not to exceed July 1, 1977. Therefore, in a staged program, interim limitations may be imposed based upon completion of facets of an overall abatement program.

Treatment models described in the guidance are not intended to specify procedures or processes, but to illustrate the means by which the limitations may be met. Alternatives which will achieve the same end are acceptable.

Metric Units

All permits should be written in metric units (kilograms, meters, kiloliters) with equivalent English units (pounds, feet, gallons) in parentheses alongside.

TORRANCE
SS-0007506

PETROLEUM REFINING

APPLICABILITY

These instructions apply to Standard Industrial Classification Code 2911.

SUBCATEGORIES CONSIDERED

Operations in the petroleum refining industry are divided into five classifications which recognize varying degrees of processing complexity. They are: (A) Crude topping; (B) Topping and cracking/reforming; (C) Topping and cracking and petrochemicals; (D) "B" category and lube oil processing; (E) "D" category and petrochemicals.

OPERATIONS EXCLUDED

"Petrochemicals" excludes all first generation conventional refinery-associated production such as BTX, alkenes, alkynes, and other miscellaneous items such as hydrogen, sulfur, coke or carbon black and ammonia. To qualify as a class "C" or "E" refinery, intermediate chemical manufacture must be shown, including such typical products as cumene, phthalic anhydride, alcohols, ketones, trimer (nonene), and styrene.

Lube oil processing excludes formulating blended oils and additives. It requires production of blending stocks via such operations as dewaxing, lube hydrotreating, and clay treatment.

APPLICATION OF LIMITATIONS

If it is necessary to issue permits during the interim before effluent limitations guidelines are proposed, we recommend that concentration schedule (A) be applied to all refineries practicing recycle. Refineries using saline or brackish water for process should be considered on an individual basis. This guidance applies only to those refineries with greater than 10,000 bbl/day production capacity, except in Class D where it includes all refineries.

Substantial deviations from the definition under each of the refinery classification categories should be accommodated by adjusting the waste load assignments for a particular plant.

The effluent limitations shown for A & B levels are expressed in pounds per thousand barrels (lb/1000 bbl) of crude or other feedstocks processed.

APPLICATION OF LIMITATIONS (continued)

Significant differences in water use practices, and hence effluent volume, exist between refineries. The underlying reasons include age of the plant, process employed, and water availability, to mention a few.

The greatest single difference is that of one-time water use and discharge versus direct or indirect air cooling and recycle. Once-through cooling water where direct process contact (i.e. barometric) is not involved, is excluded from consideration in determining effluent limitations. Relative to 'best practicable' treatment, one-time water use in direct process contact represents a necessary consideration in determining effluent limitations, relative to a similar refinery which, by virtue of age or technology, etc., practices water recycle. Additional information is presented in order to assist in making these engineering judgements.

Table I shows effluent limitations applicable to the major categories of refineries, as described. Table II shows effluent limitations applicable to those refineries within the major categories practicing water reuse via direct or indirect air cooling and recycle.

Refineries in which direct contact (barometric) cooling water is cooled via cooling towers and recycled are to be categorized as practicing water reuse (Table II). All blowdown from such towers must be included (via treatment) in effluent accounted against the limitation.

Once-through cooling water that does not come in direct contact with petroleum materials (shell and tube heat exchangers) discharging into segregated sewers is to be excluded from effluent accounted against the limitation of the refinery categorized as practicing water reuse (Table II) on the basis of process and other contaminated wastewaters. Treatment of such cooling water for such quantities of process material as may ordinarily or commonly be leaked into the cooling water is not deemed 'practicable' for the following reasons:

1. The large volumes of water relative to the pollutant leakage result in concentrations so low as to produce dubious analytical results.

2. Unless a specific violation of water quality standards results, such low concentrations would not ordinarily be expected to have a significant adverse impact on the receiving water.

3. In the absence of a significant adverse impact on the receiving water, the benefit of treating such large quantities of water does not justify the cost, i.e., such treatment is not 'practicable'.

APPLICATION OF LIMITATIONS (continued)

Other considerations to be taken into account in the application of this guidance are discussed under "special considerations."

ABATEMENT MODELS

The treatment required for industrial wastes should include "good industrial practice" and tight process control must at least equal the level of treatment required for municipal sewage.

The treatment results should be translated into allowable discharge loads in terms of "pounds per day" for each of the contaminants, taking into account the capacity and processing complexity employed in a refinery.

Treatment models representing "best practicable treatment" illustrate the means by which "A" level requirements may be met. The unit operations may vary in hydraulic order and relative size and importance according to the needs of a specific refinery.

In developing these limitations, two possible treatment system models were used, one physical/chemical, the other biological. Biological treatment methods are generally satisfactory in removing the major contaminants from the wastewater. Before biological treatment, some pre-treatment steps such as removal of high concentrations of hydrogen sulfide, ammonia, and oil may be required. Biological systems are sensitive to shock loads which can be overcome with good plant operation and/or equalization ponds.

Physical/chemical systems normally involve the use of sand filters and activated carbon. The advantages of these systems are that shock loads do not greatly affect their performance, they are flexible and can easily be added to, and they occupy about 1/7 the land that a biological system needs.

Ammonia nitrogen can be removed by stripping or by selective ion exchange. The cost of an activated carbon system is approximately the same as that of a biological system. Two major refineries have physical/chemical systems in development or under construction. General applicability to refinery effluent remains to be demonstrated.

Physical/Chemical

1. API Oil Separators
2. Chemical Coagulation and Clarification
3. pH Control
4. Sand or dual media Filters

ABATEMENT MODELS (continued)

5. Chromate removal system
6. Ammonia stripper or ion exchange
7. Carbon adsorbers
8. Carbon reactivation system

Biological

1. API Oil Separators
2. Equalization
3. Sour Water Stripping
4. Dissolved Air Flotation
5. Biological Oxidation, using aerated lagoons or activated sludge
6. Secondary Clarification
7. Chromate Removal System
8. Sand or dual media Filters

SPECIAL CONSIDERATIONS

Socio/economic impact is an important consideration when reviewing water pollution abatement programs and compliance schedules for a given refinery. In applying this effluent guidance, it must be recognized that the costs of achieving incremental improvements in effluent quality and therefore, economic impact, will vary widely among individual refineries. Factors which could influence the relative cost of various waste treatment alternatives include:

Availability of land: If it has access to a large land area, a refinery can install long-residence time lagoons and/or activated sludge treatment facilities to achieve satisfactory removals. A land-short refinery may be unable to do so.

Types of crude oils and products: The composition of the crude oil and the types of raw materials and process materials affect the raw waste load production, as does the final product mix.

Once-through cooling water: Factors that can affect cost-effectiveness include location, existing tubular heat exchange capacity, water temperature, availability of suitable makeup water, and the like.

Refinery complexity: The refinery classification system may tend to overstate or understate the raw waste load potential of certain unusual processing configurations.

Refinery Age and Layout: Problems, particularly in older refineries, may be encountered with segregation of process, cooling, boiler house, storm, sanitary, and other waters to meet proposed effluent limitations.

SPECIAL CONSIDERATIONS

Climate and geographical location: Low ambient temperature inhibits biological treatment, and high annual rainfall complicates water handling.

Available resources needed to accomplish such programs: If an approved pollution abatement program should entail major modifications to in-plant process units which would result in extended shutdown time and loss of production for either the process unit affected or the refinery, the reviewer should adjust the compliance schedule so that shutdowns will coincide with normal and reasonable refinery turnaround and inspection schedules. Examples include major changes to on-line process piping and heat exchangers.

TORRANCE
SS-0007511

EFFLUENT LIMITATIONS

TABLE I

(Pounds of Pollutant per 1000 bbl/Stream Day)

Refinery Class	NH_3 (N)	TOC (1)	BOD_5	COD	Cr^{+6}	Cr^t	O&G	Phenol	Sulfide	TSS
A	1.6	4.0	2.5	15.3	0.0008	0.041	1.66	0.017	0.028	3.3
B	3.3	8.0	5.0	30.6	0.0017	0.083	3.34	0.033	0.057	6.6
C	4.1	11.6	7.3	44.6	0.0021	0.104	4.18	0.042	0.071	8.3
D	5.0	16.0	10.0	61.0	0.0025	0.125	5.00	0.050	0.085	10.0
E	7.5	27.0	16.8	102.9	0.0038	0.187	7.50	0.075	0.128	15.0

(1) TOC is shown as a possible organic monitoring parameter. Either TOC or TOD may be used for estimating BOD, using an agreed correlation factor for the refinery.

TABLE II

Effluent Limitations (BPCTCA)
Recycle-Air Cooling Subcategory
(Pounds Per 1,000 b/sd Capacity)

Refinery Class	NH_3 (N)	TOC	BOD_5	COD	Cr^{+6}	Cr^t	O&G	Phenol	Sulfide	TSS
A	1.0	2.4	1.5	9.2	0.0005	0.025	0.99	0.010	0.017	2.0
B	2.2	5.2	3.3	19.9	0.0011	0.054	2.17	0.021	0.037	4.3
C	1.9	5.3	3.4	20.5	0.0009	0.048	1.92	0.019	0.033	3.8
D	3.9	12.5	7.8	47.6	0.0019	0.098	3.90	0.039	0.066	7.8
E	2.9	10.5	6.6	40.0	0.0014	0.073	2.93	0.029	0.049	5.9

TORRANCE
SS-0007513