2150 Area Velocity Flow Module and Sensor

Installation and Operation Guide

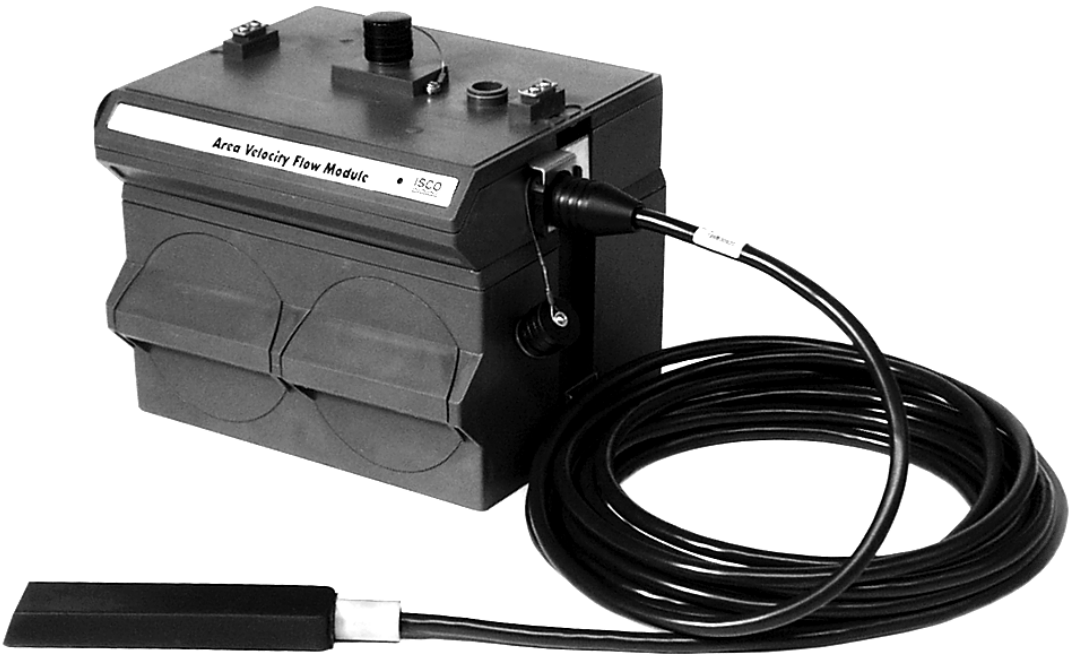

TELEDYNE ISCO
Everywhereyoulook™

Part #60-2003-092 of Assembly #60-2004-038
Copyright © 1999. All rights reserved, Teledyne Isco
Revision CD, September 16, 2016

FCC

This equipment has been tested and found to comply with the limits for a class A digital device, pursuant to Part 15 of the FCC Rules. These limits are designed to provide reasonable protection against harmful interference when the equipment is operated in a commercial environment. This equipment generates, uses, and can radiate radio frequency energy and, if not installed and used in accordance with the instruction manual, may cause harmful interference to radio communications. Operation of this equipment in a residential area is likely to cause harmful interference in which the user will be required to correct the

Canada

This ISM apparatus meets all requirements of the Canadian Interference-Causing Equipment Regulations.

Ce générateur de fréquence radio ISM respecte toutes les exigences du Règlement sur le materiel brouilleur du Canada.

Caution

Changes or modifications not expressly approved by the party responsible for compliance (Teledyne Isco) could void your authority to operate the equipment.

This equipment should be installed and operated using Isco's cables, such as the Flowlink Communication Cable or the optional Module-to-module Cable. Isco cables are listed in Appendix B, *Accessories*.

Foreword

This instruction manual is designed to help you gain a thorough understanding of the operation of the equipment. Teledyne Isco recommends that you read this manual completely before placing the equipment in service.

Although Teledyne Isco designs reliability into all equipment, there is always the possibility of a malfunction. This manual may help in diagnosing and repairing the malfunction.

If a problem persists, call or e-mail Teledyne Isco technical support for assistance. Simple difficulties can often be diagnosed over the phone. For faster service, please have your serial number ready.

If it is necessary to return the equipment to the factory for service, please follow the shipping instructions provided by technical support, including the use of the **Return Material Authorization (RMA)** specified. **Be sure to include a note describing the malfunction.** This will aid in the prompt repair and return of the equipment.

Teledyne Isco welcomes suggestions that would improve the information presented in this manual or enhance the operation of the equipment itself.

Teledyne Isco is continually improving its products and reserves the right to change product specifications, replacement parts, schematics, and instructions without notice.

Contact Information

Customer Service

Phone:	(800) 228-4373	(USA, Canada, Mexico)
	(402) 464-0231	(Outside North America)
Fax:	(402) 465-3022	
Email:	IscoCSR@teledyne.com	

Technical Support

Phone:	Toll Free (800) 775-2965 (Syringe Pumps and Liquid Chromatography)
Email:	IscoService@teledyne.com
Return equipment to:	4700 Superior Street, Lincoln, NE 68504-1398

Other Correspondence

Mail to:	P.O. Box 82531, Lincoln, NE 68501-2531
Email:	IscoInfo@teledyne.com

General Warnings

Before installing, operating, or maintaining this equipment, it is imperative that all hazards and preventive measures are fully understood. While specific hazards may vary according to location and application, take heed in the following general warnings.

This product is often installed in confined spaces. Some examples of confined spaces are manholes, pipelines, digesters, and storage tanks. These spaces may become hazardous environments that can prove fatal for those unprepared. These spaces are governed governed by OSHA 1910.146 and require a permit before entering.

Hazard Severity Levels

This manual applies *Hazard Severity Levels* to the safety alerts, These three levels are described in the sample alerts below.

⚠ CAUTION

Cautions identify a potential hazard, which if not avoided, may result in minor or moderate injury. This category can also warn you of unsafe practices, or conditions that may cause property damage.

⚠ WARNING

Warnings identify a potentially hazardous condition, which if not avoided, could result in death or serious injury.

⚠ DANGER

DANGER – limited to the most extreme situations to identify an imminent hazard, which if not avoided, will result in death or serious injury.

Hazard Symbols

The equipment and this manual use symbols used to warn of hazards. The symbols are explained below.

Hazard Symbols	
Warnings and Cautions	
	The exclamation point within the triangle is a warning sign alerting you of important instructions in the instrument's technical reference manual.
	The lightning flash and arrowhead within the triangle is a warning sign alerting you of "dangerous voltage" inside the product.
Symboles de sécurité	
	Ce symbole signale l'existence d'instructions importantes relatives au produit dans ce manuel.
	Ce symbole signale la présence d'un danger d'électocution.
Warnungen und Vorsichtshinweise	
	Das Ausrufezeichen in Dreieck ist ein Warnzeichen, das Sie darauf aufmerksam macht, daß wichtige Anleitungen zu diesem Handbuch gehören.
	Der gepfeilte Blitz im Dreieck ist ein Warnzeichen, das Sei vor "gefährlichen Spannungen" im Inneren des Produkts warnt.
Advertencias y Precauciones	
	Esta señal le advierte sobre la importancia de las instrucciones del manual que acompañan a este producto.
	Esta señal alerta sobre la presencia de alto voltaje en el interior del producto.

2150 Area Velocity Flow Module

Table of Contents

Section 1 Introduction

1.1 Product Description 1-1
1.2 Applications 1-2
1.3 2150 System Overview 1-2
1.3.1 Level 1-2
1.3.2 Velocity 1-3
1.3.3 Flow Rate 1-3
1.3.4 Total Flow 1-3
1.3.5 Data Storage 1-3
1.3.6 Input Voltage 1-4
1.4 Component Identification 1-5
1.4.1 Battery Module 1-6
1.5 Latches 1-9
1.6 Communication Connectors 1-10
1.7 Connecting the Sensor 1-11
1.8 Installing the Batteries 1-12
1.9 Stacking Modules 1-14
1.10 Technical Specifications 1-17

Section 2 Preparation and Installation

2.1 Unpacking Instructions 2-1
2.2 Safety 2-2
2.2.1 Site Conditions 2-2
2.2.2 System Power 2-2
2.3 Preparing for Installation 2-4
2.3.1 Locating the Site 2-4
2.3.2 Channels Without a Primary Device 2-4
2.3.3 Channels With a Primary Device 2-4
2.3.4 AV Module and AV Sensor Mounting Considerations 2-4
2.4 Installation Procedures 2-5
2.4.1 Install Battery Module Batteries 2-5
2.4.2 Inspect the Desiccant – Battery Module 2-6
2.4.3 Inspect the Desiccant – AV Module 2-6
2.4.4 Connecting the Modules 2-6
2.4.5 Installing the modules 2-8
2.4.6 Connecting the AV Sensor 2-9
2.4.7 Installing the AV Sensor 2-10
2.4.8 Program the Module 2-11
2.4.9 Basic Installation Checklist 2-12
2.5 Site Example 2-13
2.6 Mounting Rings 2-15
2.6.1 Spring Rings 2-15
2.6.2 Scissors Mounting Ring 2-17
2.6.3 Completing the AV Sensor Installation 2-18

Section 3 Programming

3.1 Section Overview 3-1
3.2 Flowlink Connections 3-1
3.2.1 Communication Resolution 3-2
3.3 Program Settings. 3-2
3.3.1 Level 3-3
3.3.2 Zero Level Offset 3-4
3.3.3 No Velocity Data and Flow Rates 3-5
3.3.4 Prevent Velocity Signal Interference 3-5
3.3.5 Flow Conversion 3-6
3.3.6 Silt Level 3-7
3.3.7 Data Storage Rates 3-7
3.3.8 Site Name 3-8
3.3.9 Module Name 3-8

Section 4 Modbus Output Protocol

4.1 Introduction 4-1
4.2 Operation 4-1
4.2.1 Establishing Communication 4-2
4.2.2 Module Addressing 4-2
4.3 Configurations 4-3
4.4 Glossary of Terms 4-4
4.5 Common Acronyms 4-5
4.6 Register Specifications 4-5

Section 5 Maintenance

5.1 Maintenance Overview 5-1
5.2 Maintenance Kits 5-1
5.3 Batteries 5-2
5.4 Desiccant 5-2
5.4.1 Replacing the Desiccant: AV Module 5-2
5.4.2 Replacing the Desiccant: Battery Module 5-3
5.4.3 Reactivating the Desiccant 5-3
5.5 Channel Conditions. 5-4
5.6 Other Maintenance 5-4
5.6.1 Hydrophobic Filter 5-4
5.6.2 Cleaning 5-4
5.6.3 Sensor Cable Inspection 5-5
5.7 How to Obtain Service 5-5
5.7.1 Diagnostics 5-5

Appendix A Replacement Parts

A.1 Replacement Parts Diagrams and Listings A-1

Appendix B Accessories

B.1 How to Order. B-1
B.2 General Accessories B-1
B.3 Maintenance Kits B-1
B.4 AV Sensor Mounting Accessories. B-2

Appendix C Material Safety Data Sheets

C.1 Overview C-1

Appendix D Safety Information

D.1 Safety Considerations D-1
D.2 Practical Safety Precautions D-1
D.2.1 Hazards D-1
D.2.2 Planning D-1
D.2.3 Adverse Atmospheres D-2
D.2.4 Entering Manholes D-2
D.2.5 Traffic Protection D-3
D.2.6 Falling Objects D-3
D.2.7 Removing the Covers D-3
D.2.8 Other Precautions D-3
D.2.9 Emergencies D-3
D.2.10 Field Equipment D-3
D.3 Lethal Atmospheres in Sewers D-4
D.4 Hazardous Gases D-6

List of Figures

1-1 Controls, connectors, and indicators – 2150 Flow Module 1-5
1-2 Battery Module components, top view 1-6
1-3 Battery Module components, bottom view 1-7
1-4 2150 Area Velocity Sensor Parts 1-8
1-5 Unlocking the Latch 1-9
1-6 Flow Module - Upper connector, capped 1-10
1-7 Flow Module - Upper connector, uncapped 1-10
1-8 Flow Module - Lower connector, plugged 1-10
1-9 Flow Module - Lower connector, unplugged 1-11
1-10 Flow Module - preparing the sensor connectors 1-11
1-11 Flow Module - connecting the sensor 1-11
1-12 Insert Battery in carrier 1-12
1-13 Battery Module - inserting carrier 1-12
1-14 Battery Module - aligning the door 1-13
1-15 Battery Module - closing the door 1-13
1-16 Flow Module - Unlocking the latch 1-14
1-17 Flow Module - Unplugging the connector 1-14
1-18 Flow Module - Pushing plug into holder 1-15
1-19 Battery Module - uncapping the connector 1-15
1-20 Battery Module - inserting the handle 1-16
1-21 Aligning the modules 1-16
1-22 Locking the modules 1-17
1-23 2150 Module Connector Pins 1-20
2-1 Identifying the 2150 voltage specification 2-3
2-2 Identifying the voltage specification on the DB9 cable 2-3
2-3 Installing a Battery 2-6
2-4 Assembling a system (shown: 2 flow modules with 1 battery module) 2-7
2-5 Connecting the AV Sensor 2-10
2-6 Typical Round-pipe Installation 2-14
2-7 Sensor Installed on a Spring Ring 2-15
2-8 Scissors Ring adjustment 2-18
3-1 Flowlink connections 3-1
3-2 Preferred Measurement Location 3-4
3-3 Zero Level Offset Measurement 3-5
4-1 Configuration example 4-3

List of Tables

1-1 Controls, connectors, and indicators – 2150 Flow Module 1-5
1-2 Battery Module Components - Top View 1-6
1-3 Battery Module Components - Bottom View 1-7
1-4 2150 Area Velocity Sensor Parts and Descriptions 1-8
1-5 Specifications – 2150 Area Velocity Flow Module 1-17
1-6 Specifications – 2150 Area Velocity Sensor 1-19
1-7 Specifications – 2191 Battery Module 1-20
1-8 AV Module Connector Pins 1-20
2-1 Voltage Specifications for 2100 System Components 2-2
3-1 Flow Conversion Methods 3-6
4-1 Modbus ASCII Address 1 Register Definitions 4-6
4-2 Modbus ASCII Address 2+(N-1) Register Definitions 4-6
4-3 2100 Measurement Parameters by Model Number* 4-8
D-1 Hazardous Gases D-6

2150 Area Velocity Flow Module

Section 1 Introduction

1.1 Product Description

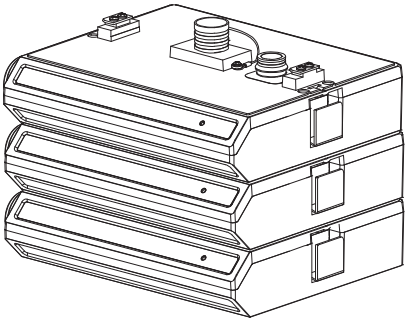

A 3-module site

The 2150 Area Velocity Module is part of Isco's 2100 Series system. The 2100 Series system measures parameters of open channel flow streams.

The 2100 Series system is designed to be modular so that you can expand the system to meet your data collection needs. By stacking the 2100 Series modules, a single site can measure multiple flow channels, collect redundant data, or add other available measurement capabilities. A site can include remote measurement points, as distant as 3300 feet, by connecting modules with cables. Even with several remote modules configured as a site, you can still retrieve all of the measurement data from a single connection.

The 2100 Series System is paired with Isco's *Flowlink* software. With this software application, you can quickly set up modules, retrieve measurement data, manage the sites and analyze the data.

The module's data storage memory is quite flexible, able to store the measurements in intervals from 15 seconds to 24 hours. The modules can also be configured for variable rate data storage. Variable rates allow you to store data at a different interval when a programmed condition occurs.

The module's program and collected data are stored in *flash* memory for security. Flash memory retains data without the concern of power failures or aging backup batteries. Its capacity is more than sufficient for many applications. The data storage memory can hold approximately 79,000 readings – the equivalent of nine months of level and velocity data when stored at fifteen minute intervals. The flash memory also stores sensor calibration information. A separate flash memory device inside the module stores the operating firmware.

The rugged 2100 series components are rated NEMA 4X, 6P (IP68). The permanently sealed enclosures are designed to meet the environmental demands of many sewer flow monitoring applications. All connections between modules, sensors, and communication cables "lock" in place. Each locking mechanism strongly secures the components and ensures a watertight seal.

The flow information from a 2150 can be used to pace an Isco 3700, GLS, or 6700 Series sampler. The connection is made using a 2100 Series Sampler Interface Cable (Isco part #68-2000-014). A flow pulse is sent out every 100 gallons or 500 liters of flow, depending on how the 2150 is configured.

1.2 Applications

Typical applications for the 2150 Module include:

- Portable and permanent on-site flow monitoring for inflow and infiltration (I&I), capacity assessment, combined sewer overflow (CSO), and other sewer studies
- Storm Water Runoff Monitoring
- Shallow flow measurement in small pipes.

1.3 2150 System Overview

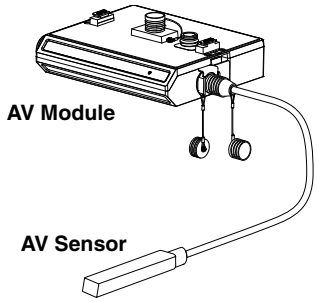

The 2150 measures liquid level and average stream velocity, and calculates the flow rate and total flow. The liquid level and velocity measurements are read from an attached AV Sensor that is placed in the flow stream. Flow rate calculations are performed internally using the measured parameters from the AV Sensor. Additionally, the AV Module can measure its input voltage – a service feature.

The 2150 is designed to provide durable operation with only a minimal amount of routine maintenance, all of which may be performed in the field. Typically, the AV Module and its AV Sensor will only require that you keep the stream free from excessive debris, and replace or recharge spent desiccant and batteries.

Sections 1.3.1 through 1.3.6 describe the module and sensor in greater detail.

1.3.1 Level

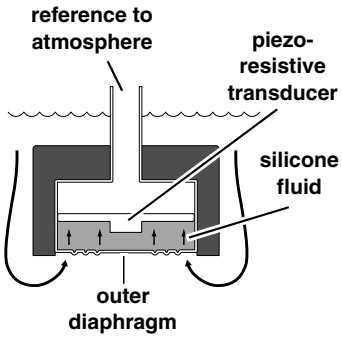

The AV Sensor's internal differential pressure transducer measures the liquid level. The transducer is a small piezo-resistive chip that detects the difference of the pressures felt on the inner and outer face.

The stainless steel outer diaphragm is exposed to the flow stream through the ports under the AV Sensor. The pressure felt on the outer diaphragm is transferred to the outer face of the transducer through a silicone fluid medium. The outer diaphragm and fluid isolate the sensitive transducer from direct exposure to the stream. The inner face of the transducer is exposed, or referenced, to the atmosphere through the internal vent tube that runs the full length of the AV Sensor's cable.

The difference between the pressures exerted on the transducer is the hydrostatic pressure. Hydrostatic pressure is proportional to the level of the stream. The analog representation of the hydrostatic pressure is digitized and sent to the AV Module as an RS-485 half-duplex signal.

1.3.2 Velocity

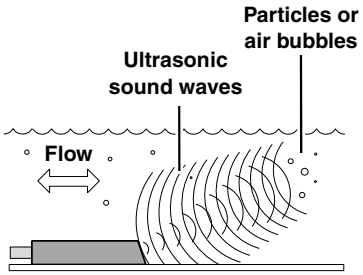

The AV Sensor measures average velocity by using ultrasonic sound waves and the Doppler effect. The Doppler effect states that the frequency of a sound wave (or other wave) passed from one body to another is relative to both their motions. As the two approach each other, the frequency increases; as they move apart, the frequency decreases.

The AV Sensor contains a pair of ultrasonic transducers. One transducer transmits the ultrasonic sound wave. As the transmitted wave travels through the stream, particles and bubbles carried by the stream reflect the sound wave back towards the AV Sensor. The second transducer receives the reflected wave.

Circuits internal to the module compare the frequencies of the sound waves and extract the difference. An increase or decrease in the frequency of the reflected wave indicates forward or reverse flow. The degree of change is proportional to the velocity of the flow stream.

1.3.3 Flow Rate

Using measurements from the AV Sensor, the AV Module can calculate the flow rate. The AV Module supports many different flow rate conversion methods:

- Area Velocity
- Data Points
- Manning Formula
- Two-term Polynomial Equations
- Flumes
- Weirs

Often the Model 2150 Area Velocity Flow Module is chosen for applications where a primary device is not available, nor is it practical to install a primary device. Therefore, area velocity is usually the conversion method of choice.

The AV Module is capable of calculating and storing any two conversion methods simultaneously. This feature is useful when it is necessary to validate a flow conversion method. For example, the flow rate at a new site programmed for area velocity conversion can be directly compared to the flow rate calculated using a Manning formula.

1.3.4 Total Flow

The AV Module can calculate and report the total flow. You can set up the module to monitor *net, positive,* or *negative* total flow from either of the calculated flow rates.

1.3.5 Data Storage

Through Flowlink, you configure which type of data is logged and the storage rate. For each measurement, the *Data Storage Setup* window lets you turn the primary rate off, or select a rate from 15 seconds to once every 24 hours. If the primary rate is turned off, the AV Module will not store the measurement (unless a secondary rate is selected). However, the AV Module will still take readings if that measurement type is necessary for a calculation.

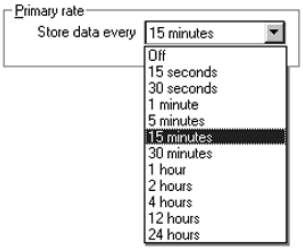

Secondary rates are used to log data at a different rate when a user-defined condition exists. For example, a secondary rate can be used to increase the level and velocity data storage rate when level is greater than or equal to a point of interest. Secondary rates give you the best resolution of data, but only when it is needed. Until the condition is met, the module will conserve power and memory by storing the data at the primary storage rate. Like the primary rate, you can turn the secondary rate off, or select a storage rate of 15 seconds to every 24 hours.

Time Resolution

The time resolution of each measurement is one second. That is, readings are taken at the same time as the time stamp, not collected and averaged over a period of time before the stamp.

Rollover Memory

Whether the measurements are stored at the primary or secondary rate, they are stored in a *rollover* type of memory. When full, the module overwrites the oldest data with the newest readings.

1.3.6 Input Voltage

The AV Module measures the input voltage so that it can be reported to the user. Input Voltage measurements are useful when estimating the remaining battery life and determining when the system must be serviced. You can log the Input Voltage readings in data storage to chart power consumption.

2191 Battery Module

The Battery Module uses two 6 volt lantern batteries to supply 12VDC to Model 2100 system modules.

The Battery Module's only role is to supply DC power, yet it still supports communications between other modules. The upper and lower connectors pass along communications between modules attached above and below.

You can stack Battery Modules to increase the power available to a module or a stack of modules.

1.4 Component Identification

The components of the 2150 Module, area velocity sensor, and 2191 Battery Module are shown in Figures 1-2 through 1-3. Items referenced in the figures are briefly discussed in the tables below.

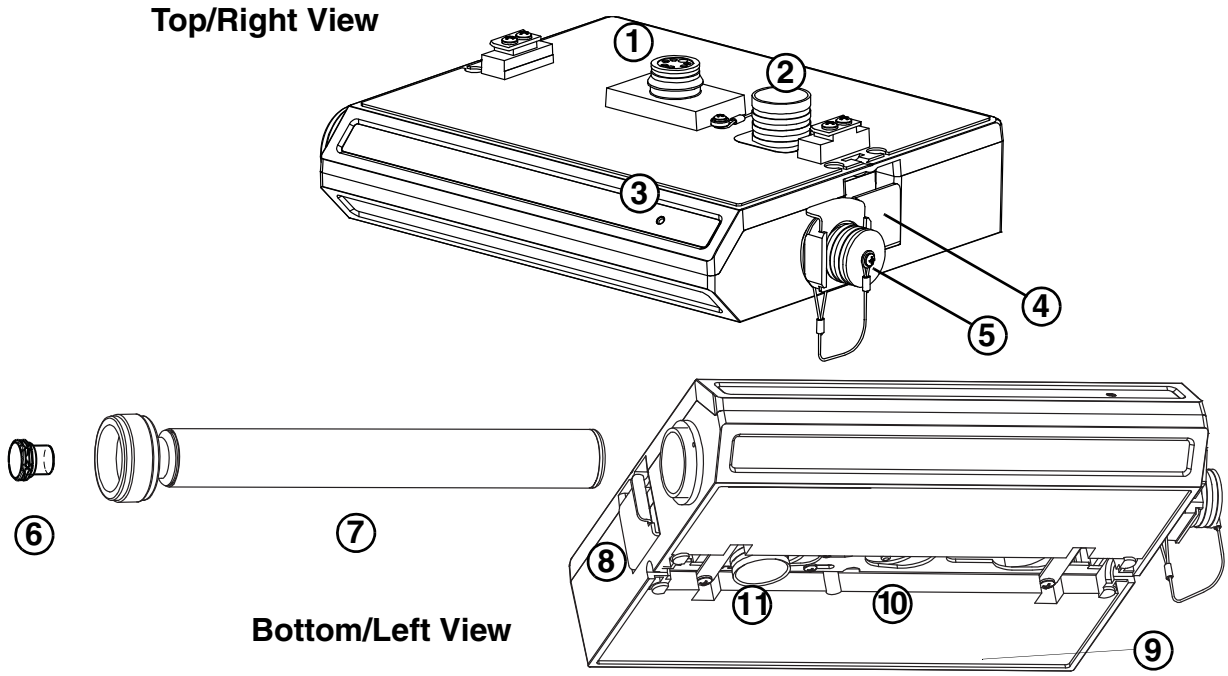

Figure 1-1 Controls, connectors, and indicators – 2150 Flow Module

Table 1-1 Controls, connectors, and indicators – 2150 Flow Module

Item No.	Name	Description
1	Communication Connector	Upper communication port. The connection transfers data and 12 VDC power to other modules. The port is also used to connect to a PC running Flowlink software.
2	Connector Caps	Insert into unused communication connectors to terminate the network and protect them from moisture damage. When communication connectors are in use, the caps must be stowed as shown in Figure 1-1 to protect the terminating components inside the caps.
3	Communication Indicator	Illuminates when the module is active. With Flowlink, a user can turn on this light-emitting diode (LED) to identify the module at a multiple-module site.
4	Latch Release	Push in to release the module from a stack.
5	Sensor Receptacle	Port used to attach the AV Sensor. Insert the protective cap when not in use.
6	Hydrophobic Filter	Prevents moisture from entering the case and reference line.
7	Desiccant Cartridge	Container holding desiccant that dries the reference air.
8	Latch	Push in to lock the module in a stack.
9	Serial Number Label	On back of unit - lists product ID and unit serial numbers.
10	Communication Connector	Lower communication port. The connector transfers data and 12 VDC power to other modules.
11	Connector Plug	Insert into the interface connector when the connector is not in use to protect it from damage.

1.4.1 Battery Module

Figures 1-2 and 1-3 identify key components of the model 2191 Battery Module.

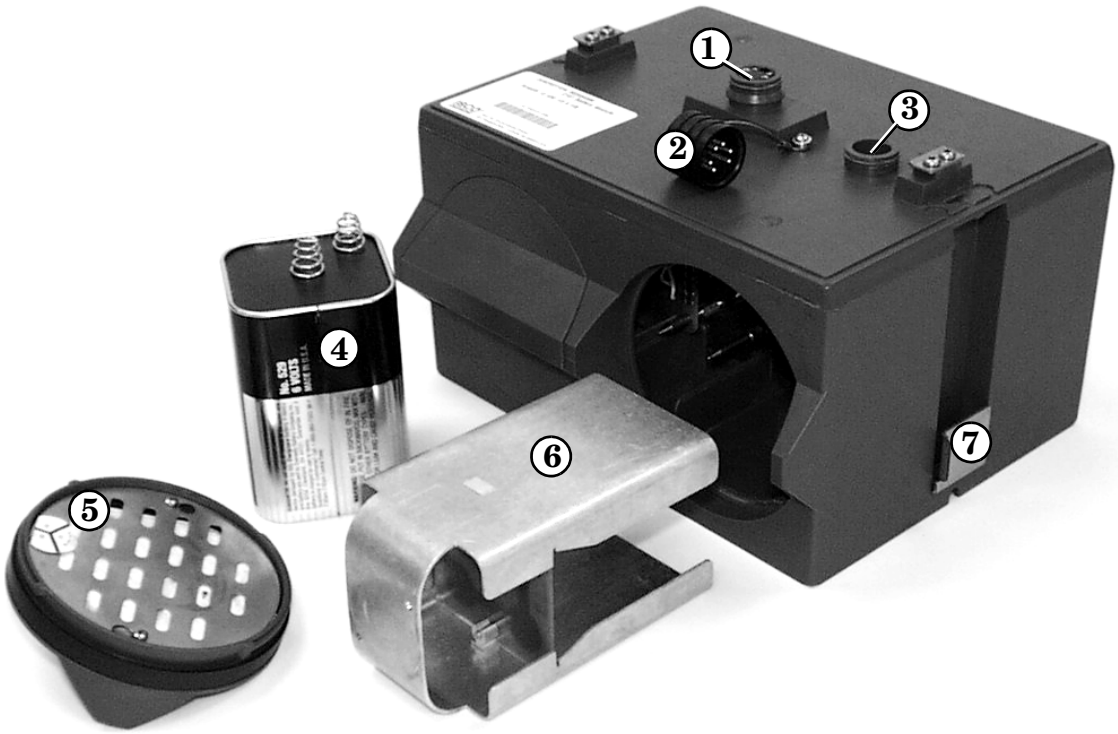

Figure 1-2 Battery Module components, top view

Table 1-2 Battery Module Components - Top View

Item No.	Description
1	Communication Connector
2	Connector Cap
3	Connector Cap Holder
4	Lantern Battery (Alkaline shown)
5	Door
6	Battery Carrier
7	Latch Release

Figure 1-3 Battery Module components, bottom view

Table 1-3 Battery Module Components - Bottom View

Item No. Fig. 1-3	Description
1	Communication connector
2	Connector plug
3	Connector plug holder
4	Latch

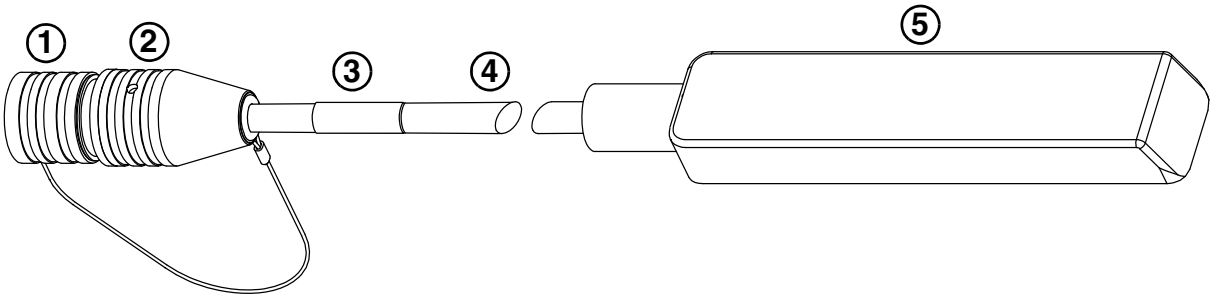

Figure 1-4 2150 Area Velocity Sensor Parts

Table 1-4 2150 Area Velocity Sensor Parts and Descriptions

Item No. Fig. 1-4	Name	Description
1	Connector Cap	Protects the connector. When the connector is not in use, this cap must be in place to prevent damage to the connector pins and reference air tubing.
2	Connector	Attaches to the sensor receptacle on the 2150.
3	Serial Number Label	Lists product ID and unit serial numbers.
4	Cable	394 in (10 m) cable containing the reference air tubing and conductors to transfer level data, velocity data, and AV Sensor power.
5	Sensor Body	The sensor body is placed in the flow stream to measure level and velocity.

1.5 Latches

Latches must be operated to stack and unstack the modules. Take a moment to familiarize yourself with operating the latches. The latch is operated by pushing on one of the sides — the right side to unlock, and the left side to lock. Both latches are flush to the module's sides in the locked position.

⚠ CAUTION

The latch can be damaged by applying too much force. Never press on both sides at the same time. Do not force the latch if it is obstructed. While some degree of pressure must be applied to slide the latch, the ends of the latches should never bend more than 1/8".

Figure 1-5 shows how to unlock the latch. You must unlock the latch to place the module on top of a stack. Otherwise, the latch is normally locked. Locate the latch release on the right side of the module. Push in to slide the latch toward the left of the module.

Module stacking is described in more detail in Section %%.

Figure 1-5 Unlocking the Latch

☑ Note

Latches will "click" when they are fully locked and unlocked.

1.6 Communication Connectors

When a communication connector is not in use, the connector should always be capped (Figures 1-6 and 1-8). The cap will seal the connector to prevent corrosion, prevent moisture from entering the unit, and improve communications.

When a communication connector is in use, store the cap on the holder next to the connector (Figures 1-7 and 1-9). The communication connector will be sealed by its mating connector.

⚠ CAUTION

Caps **PUSH ON** and **PULL OFF**. Do not rotate the caps to remove them from the connectors.

☑ *Note*

For modules to correctly stack and lock together, protective caps between the modules must be stored on the holders. Section 1.9 shows how to store the caps so that you can stack the modules.

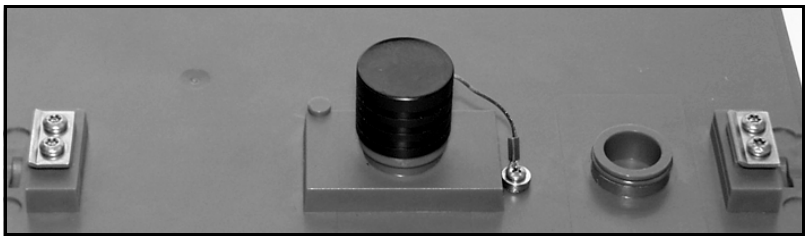

Figure 1-6 Flow Module - Upper connector, capped

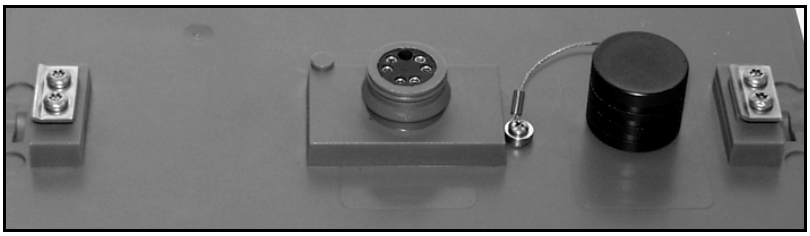

Figure 1-7 Flow Module - Upper connector, uncapped

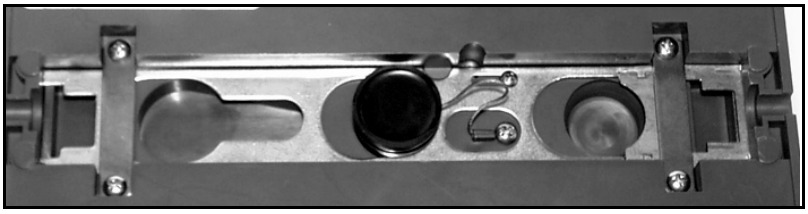

Figure 1-8 Flow Module - Lower connector, plugged

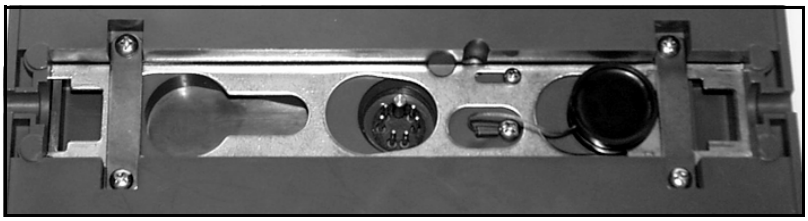

Figure 1-9 Flow Module - Lower connector, unplugged

1.7 Connecting the Sensor

To connect the Area Velocity Sensor to the 2150 Flow Module, follow steps in Figures 1-10 and 1-11.

1. Prepare the 2150's sensor connector by removing the cap. To do so, push down on the Sensor Release and pull out the cap.
2. Prepare the sensor cable's connector by removing the cap.

Figure 1-10 Flow Module - preparing the sensor connectors

1. Align the pins on the sensor cable with those in the sensor receptacle.
2. Push the sensor connector into the receptacle until the sensor release clicks.
3. To be certain that the connectors are locked, lightly pull on the cable connector; the cable should be held in place by the sensor release clip.
4. Push the protective caps on the module and sensor together.

Figure 1-11 Flow Module - connecting the sensor

1.8 Installing the Batteries

The Battery Module requires two lantern batteries. The figures below show a 6 VDC alkaline battery. Rechargeable 6 VDC lead-acid batteries are also available for the module.

To install the batteries, follow the instructions in Figures 1-12 through 1-15.

Load the Lantern Battery into the Carrier.

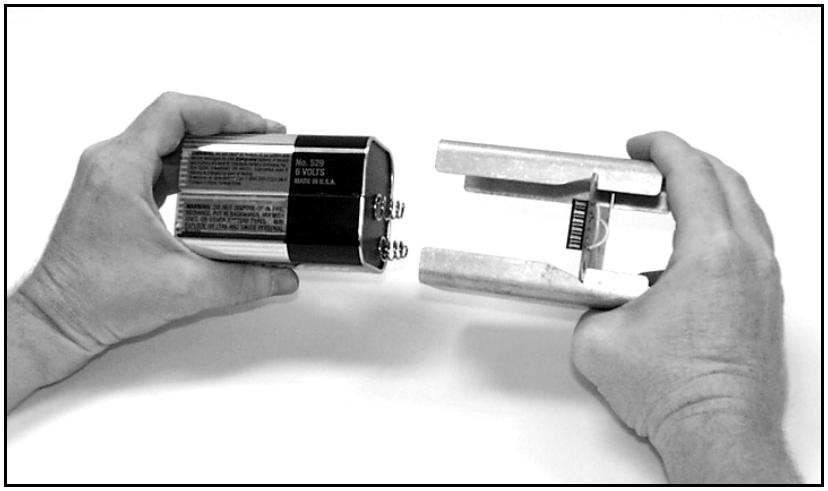

Figure 1-12 Insert Battery in carrier

Insert the carrier and battery into the module. Note the position of the carrier's connector; it must be aligned toward the center of the module.

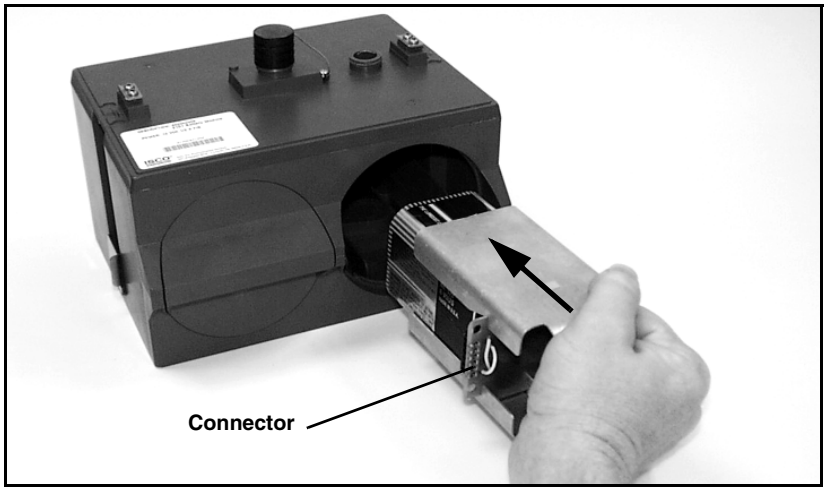

Figure 1-13 Battery Module - inserting carrier

While holding the door in your right hand, align the marks and insert the door.

Figure 1-14 Battery Module - aligning the door

Rotate the door 1/4 turn clockwise.

Repeat Steps 1-12 through 1-15 to install the second battery.

Figure 1-15 Battery Module - closing the door

1.9 Stacking Modules

To stack a 2150 Flow Module on a 2191 Battery Module, follow the instructions in Figures 1-16 through 1-22.

Unlock the latch to release the connector plug.

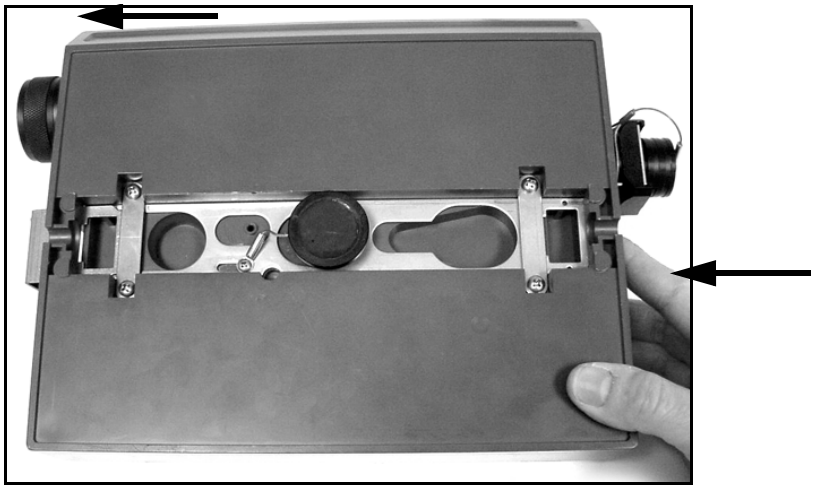

Figure 1-16 Flow Module - Unlocking the latch

Pull the plug out of the connector.

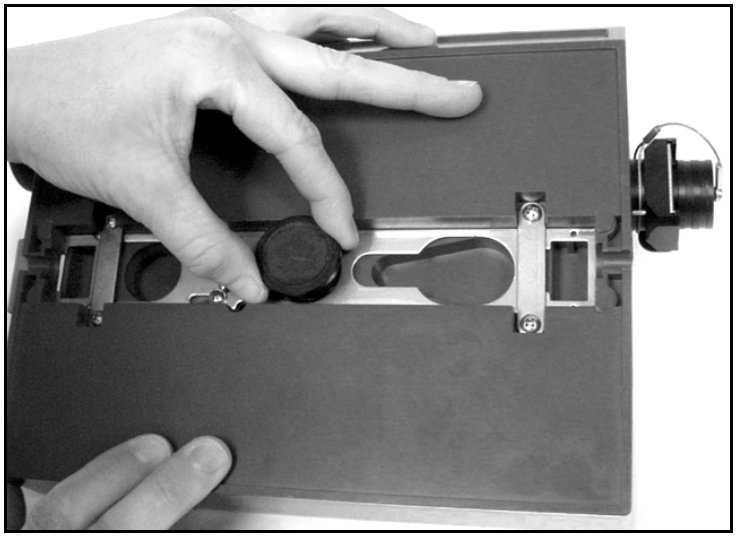

Figure 1-17 Flow Module - Unplugging the connector

Push the plug into the holder.

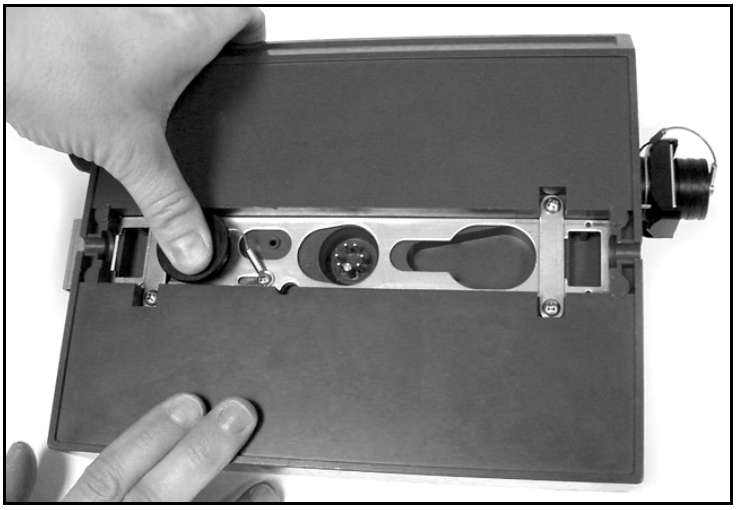

Figure 1-18 Flow Module - Pushing plug into holder

On the Battery Module, uncap the connector. Store the cap on the holder.

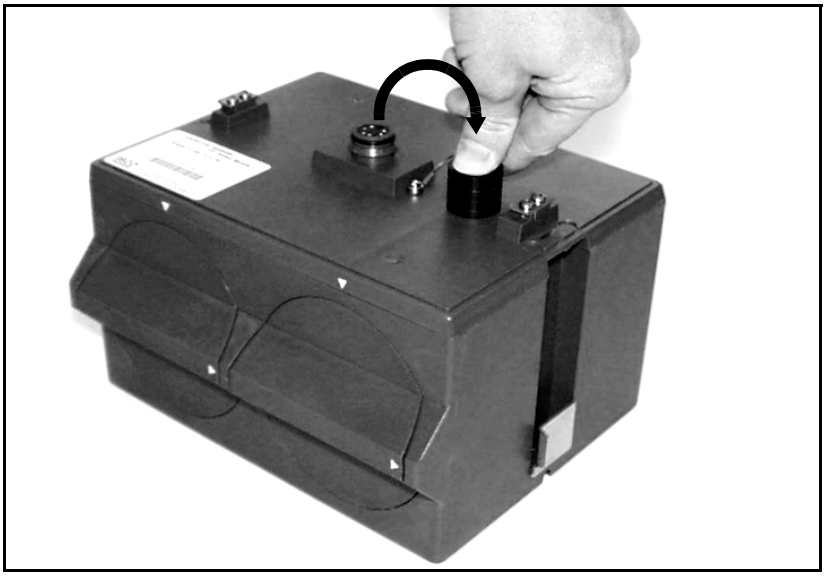

Figure 1-19 Battery Module - uncapping the connector

Place the handle on the Battery Module. The handle must rest towards the back of the module, otherwise its movement will be obstructed by the sensor cable, desiccant cartridge, and latches.

Figure 1-20 Battery Module - inserting the handle

Align the modules and gently press the 2150 module down onto the 2191 module.

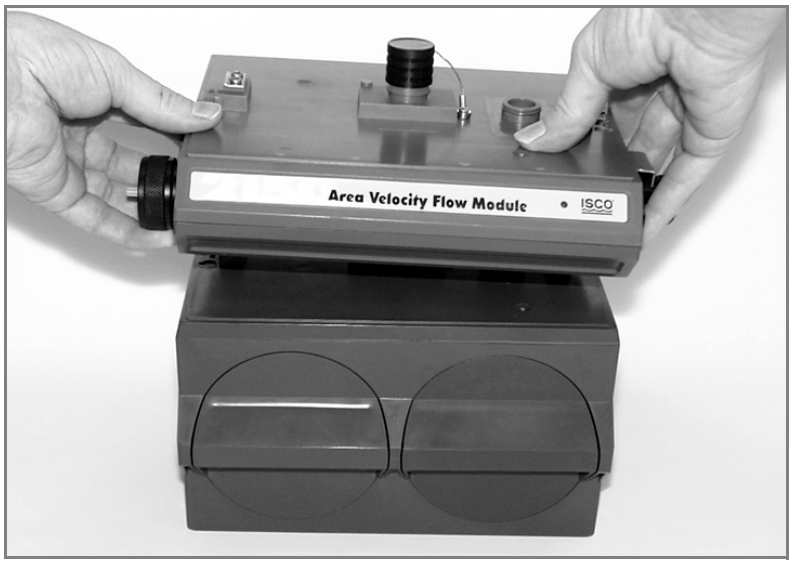

Figure 1-21 Aligning the modules

Locate the latch extending from the left side of the 2150 module. Push in to slide the latch toward the right of the module.

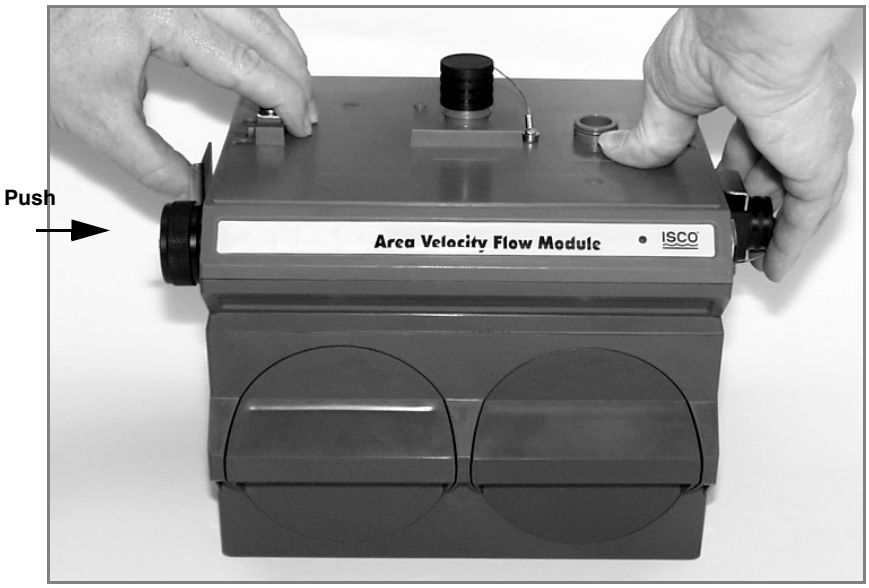

Figure 1-22 Locking the modules

1.10 Technical Specifications

The following tables provide technical information about the 2150 Module and its related components.

- Table 1-5 lists the technical specifications of the 2150 Area Velocity Flow Module
- Table 1-6 lists the technical specifications of the 2150 Area Velocity Sensor
- Table 1-7 lists the technical specifications of the 2191 Battery Module
- Figure 1-23 and Table 1-8 lists information about the 2150 Module's communication connector.

Table 1-5 Specifications – 2150 Area Velocity Flow Module

Size (H×W×D)	2.9 × 11.3 × 7.5 in.	7.4 × 28.7 × 19.1 cm
Weight	2.0 lbs	0.9 kg
Material	High-impact polystyrene, stainless steel	
Enclosure (self-certified)	NEMA 4X, 6P	IP 68
Power	7 to 26 VDC, 100 mA typical at 12 VDC, 1 mA standby **Note** Earlier versions of the 2150, as well as some other system components including cables, have lower voltage limits and cannot be connected in systems powered by more than 16.6 VDC. Refer to Section 2.2.2 for complete information.	

Table 1-5 Specifications – 2150 Area Velocity Flow Module (Continued)

Typical Battery Life (one module)	Data Storage Interval	Alkaline Batteries	Lead-Acid Batteries
	15 minutes	15 months	2.5 months
	5 minutes	8 months	1.5 months
	1 minute	2 months	11 days
Program Memory	Non-volatile, programmable flash; can be updated using PC without opening enclosure; retains user program after updating		
Number of Modules	Up to 4, field interchangeable		
Maximum Distance between Remote Modules	3300 ft	1000 m	
Wiring between Modules	Twisted pair for communication, pair for power, gauge dependent on distance		
Flow Rate Conversions	Up to 2 independent level-to-area and/or level-to-flow rate conversions		
Level-to-Area Conversions			
Channel Shapes	Round, U-shaped, rectangular, trapezoidal, elliptical, with silt correction		
Data Points	Up to 50 level-area points		
Level-to-Flow Rate Conversions			
Weirs	V-notch, rectangular, Cipolletti, Isco Flow Metering Inserts, Thel-Mar		
Flumes	Parshall, Palmer-Bowlus, Leopold-Lagco, trapezoidal, H, HS, HL		
Manning Formula	Round, U-shaped, rectangular, trapezoidal		
Data Points	Up to 50 level-flow rate points		
Equation	2-term polynomial		
Total Flow Calculations	Up to 2 independent, net, positive or negative, based on either flow rate conversion		
Data Storage Memory	Non-volatile flash; retains stored data during program updates		
Capacity	395,000 bytes (up to 79,000 readings, equal to over 270 days of level and velocity readings at 15 minute intervals, plus total flow and input voltage readings at 24 hour intervals)		
Data Types	Level, velocity, flow rate 1, flow rate 2, total flow 1, total flow 2, input voltage		
Storage Mode	Rollover with variable rate data storage based on level, velocity, flow rate 1, flow rate 2, total flow 1, total flow 2, or input voltage		
Storage Interval	15 or 30 seconds; 1, 2, 5, 15 or 30 minutes; or 1, 2, 4, 12 or 24 hours		
Bytes per reading	5		
Setup and Data Retrieval	Serial connection to computer with Isco Flowlink for Windows software		
Baud Rate	38,400		
Temperature Range	-40° to 140°F	-40° to 60°C operating & storage	

Table 1-6 Specifications – 2150 Area Velocity Sensor		
Size (H×W×D)	0.75 × 1.31 × 6.00 in.	1.9 × 3.3 × 15.2 cm
Cable Length	394 in.	10 m
Cable Diameter	0.37 in.	0.9 cm
Weight *(including cable)*	2.1 lbs	0.95 kg
Level Measurement		
Method	Submerged pressure transducer mounted in the flow stream	
Transducer Type	Differential linear integrated circuit pressure transducer	
Range[1]	0.033 to 10 ft. (optionally) up to 30 ft.	0.010 to 3.05 m 9.15m
Maximum Submersible Depth	34 ft.	10.5 m
Accuracy[2]	± .010 ft.	± 0.003 m
Typical Long Term Stability	± 0.023 ft./yr	± 0.007m/yr
Compensated Temperature Range	32 - 122°F	0 - 50°C
Velocity Measurement		
Method	Doppler Ultrasonic	
Frequency	500 kHz	
Transmission Angle	20° from horizontal	
Typical Minimum Depth for Velocity Measurement	0.08 ft.	25 mm
Range	-5 to +20 ft./s	-1.5 to +6.1 m/s
Accuracy[3]	Velocity -5 to +5 ft./s (-1.5 to +1.5 m/s) 5 to 20 ft./s (1.5 to 6.1 m/s)	Error ±0.1 ft./s (±0.03 m/s) ±2% of reading
Operating Temperature	32° to 160°F	0° to 71°C
Temperature Measurement Accuracy	± 3.6°F	± 2 °C
Materials		
Sensor	Epoxy, chlorinated polyvinyl chloride (CPVC), stainless steel	
Cable	Polyvinyl chloride (PVC), chlorinated polyvinyl chloride (CPVC)	

Notes:

1. Actual vertical distance between the area velocity sensor and the liquid surface
2. Maximum non-linearity, hysteresis, and temperature error from actual liquid level
3. In water with a uniform velocity profile and a speed of sound of 1480 m/s (4850 ft./s)

Table 1-7 Specifications – 2191 Battery Module		
Size (H×W×D)	6.0 × 9.6 × 7.6 in.	15.2 × 24.4 × 19.3 cm
Weight *(without batteries)*	3.2 lbs.	1.4 kg
Materials	ABS plastic, stainless steel	
Enclosure *(self-certified)*	NEMA 4X, 6P	IP68
Batteries	6V alkaline lantern or lead-acid lantern, quantity 2	
Capacity		
Alkaline Lantern Batteries	25 Ahrs	
Lead-acid Lantern Batteries	5 Ahrs	

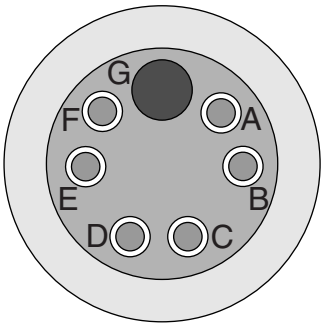

Communications Port
(upper connector shown)

Figure 1-23 2150 Module Connector Pins

Table 1-8 AV Module Connector Pins		
Pin	**Name**	**Description**
A	LONA	Neuron differential transceiver Data A
B	LONB	Neuron differential transceiver Data B
C	VIN+	Positive power supply voltage input (+12 VDC nominal)
D	VIN–	Negative power supply voltage input (0 VDC nominal)
E	RCVUP	PC data receiver RS-232 level input
F	XMTUP	PC data transmit RS-232 level output
G	Key	Aligns connector pins

2150 Area Velocity Flow Module

Section 2 Preparation and Installation

2.1 Unpacking Instructions

When the system arrives, inspect the outside packing for any damage. Then carefully inspect the contents for damage. If there is damage, contact the delivery company and Teledyne Isco (or its agent) immediately.

⚠ WARNING

If there is any evidence that any items may have been damaged in shipping, do not attempt to install the unit. Please contact Teledyne Isco (or its agent) for assistance.

When you unpack the system, check the items against the packing list. If any parts are missing, contact the delivery company and Teledyne Isco's Customer Service Department. When you report missing part(s), please indicate them by part number. In addition to the main packing list, there may be other packing lists for various sub-components.

It is recommended that you retain the shipping cartons as they can be used to ship the unit in the event that it is necessary to transport the system.

Please complete the registration card and return it to:

Teledyne Isco
Customer Service Dept.
P.O. Box 82531
Lincoln, NE 68501 USA

Phone:(800) 228-4373
Outside USA & Canada call:
(402) 464-0231

FAX: (402) 465-3022

E-mail:IscoInfo@teledyne.com

2.2 Safety

Before installing, operating, or maintaining this equipment, it is imperative that all hazards and preventive measures are fully understood.

2.2.1 Site Conditions

The 2100 Series components are often installed in confined spaces. Some examples of confined spaces include manholes, pipelines, digesters, and storage tanks. These spaces may become hazardous environments that can prove fatal for those unprepared. These spaces are governed by OSHA 1910.146 and require a permit before entering.

⚠ WARNING

The installation and use of this product may subject you to hazardous working conditions that can cause you serious or fatal injuries. Take any necessary precautions before entering a worksite. Install and operate this product in accordance with all applicable safety and health regulations, and local ordinances.

2.2.2 System Power

2150 modules currently sold can be powered by 7 to 26 volts. Earlier units, as well as some other 2100 system components, are limited to a maximum of 16.6 volts (12 volts typical). The voltage specification is printed on the serial tag located on the back of the module (refer to Figure 2-1).

Table 2-1 lists the maximum voltages for all Isco 2100 instrumentation. Regardless of the capabilities of other components, **never** attempt to connect a module or cable to a system using a power source that exceeds its stated operating range.

Table 2-1 Voltage Specifications for 2100 System Components

Module or Cable	Earlier Voltage Range	Current Voltage Range	Date of Change
2150	7-16.6 VDC	7-26 VDC	March 2005
2110	7-16.6 VDC		N/A
2101			
2103			
2102	10.2-16.6 VDC		
2108	7-26 VDC		
2105			
RS-232 DB9 Cable (part #60-2004-046)	7-16.6 VDC	7-26 VDC	January 2009
RS-232 USB Cable (part #60-2004-507)	7-26 VDC		N/A
Sampler Interface Cable (part #60-2004-260)	12VDC		N/A (Cable is powered from sampler.)

Figure 2-1 Identifying the 2150 voltage specification

The module crown connector on the earlier RS-232 DB9 digital communication cable (part #60-2004-046) is unmarked. The connector on the 26-volt cable has a serial tag specifying the higher voltage (refer to Figure 2-2).

Lower Voltage DB9 Cable

Higher Voltage DB9 Cable

Figure 2-2 Identifying the voltage specification on the DB9 cable

⚠ WARNING

Injury and/or equipment damage can result from connecting modules or cables to a power source exceeding the specified operating voltage range. Check labeling on all modules and cables for voltage ranges.

Note

All connected system components should share a common supply ground.

2.3 Preparing for Installation

2.3.1 Locating the Site

The 2150 Flow Module is designed to measure flow in open channels with or without a primary device. A primary device is a hydraulic structure, such as a weir or a flume that modifies a channel so there is a known relationship between the liquid level and the flow rate. Although the 2150 supports flow rate conversion in channels with a primary device, its level and velocity measurement capabilities are best suited for channels *without* a primary device.

Note

Primary devices limit the usefulness of the AV Sensor's readings. In most cases, levels and velocities near these structures do not represent what normally occurs in the channel. If you must use area velocity flow conversion, or if your interest is the stream's velocity, do not install the AV Sensor near a primary device. Move the AV Sensor away to where the flow is unaffected by the primary device.

2.3.2 Channels Without a Primary Device

When the AV Sensor is installed without a primary device, find a section of channel with a minimum of disturbances to the flow. Avoid areas with elbows, outfalls, inverts, junctions, etc. that create turbulence near the AV Sensor. The AV Sensor should be located away from these disturbances to a point where the flow has stabilized. For best results, install the AV Sensor where the flow is most uniform. Uniform flow is a condition where the water surface is parallel to the bottom of the channel.

2.3.3 Channels With a Primary Device

If the AV Sensor is installed in a primary device, its location depends on the type of primary device. Most primary devices have a specific place for the head (level) measurement sensor. For more details about the location of the head measuring point, refer to the *Isco Open Channel Flow Measurement Handbook*, or to information provided by the manufacturer of the primary device.

Note

When you install the AV Sensor for use within a primary device, a Level-to-Flow conversion method should be used. (See Programming, Section 3.)

2.3.4 AV Module and AV Sensor Mounting Considerations

Ideal sites are easily accessible for service and data collection, while still providing protection for the 2100 Series devices. The 2100 Series devices are rated NEMA 4X, 6P, and constructed of

materials that can withstand harsh environments. However, continual exposure to UV light, or periodic submersion should be avoided to extend the life of the components.

Typically, the AV Module is suspended inside a manhole. Suspending the AV Module near the opening will protect it from the elements, minimize the chance of submersion, and allow it to be easily retrieved without entering the manhole.

The AV Sensor should be installed within 25 feet (7.6 m) of the AV Module. Distances greater than 25 feet require custom length cables. Call the factory or your representative.

2.4 Installation Procedures

2.4.1 Install Battery Module Batteries

The Battery Module requires two 6V lantern-type batteries. The following batteries may be used in the Battery Module:

- commercially available 6VDC alkaline lantern batteries (Isco P/N 340-2006-02)
- rechargeable 6VDC lead-acid battery in a lantern-style case. This 5.0 ampere-hour battery can be ordered from Isco (P/N 60-2004-041).

To install batteries (refer to Figure 2-3):

1. Remove the battery door. To remove the door, turn it 1/4 turn counter-clockwise and pull it from the Battery Module.
2. Pull the lantern battery carrier out of the Battery Module.
3. Remove the old battery from the carrier.
4. Insert a fresh battery in the carrier. Slide in the battery so that the springs contact the plate inside the carrier.
5. Align the connectors and insert the battery carrier into the Battery Module.
6. Check the humidity indicator disk inside the door. (See section 2.4.2.)
7. Replace the door.

Repeat steps 1 through 7 to install the second battery.

Note

The batteries should always be replaced as a pair. Never mix old and new batteries.

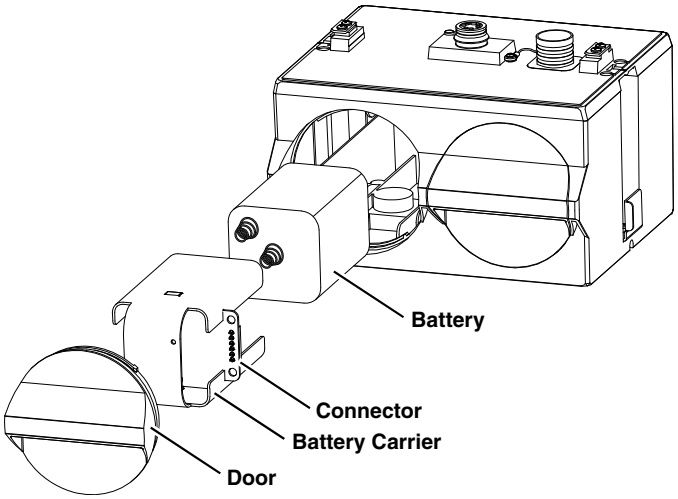

Figure 2-3 Installing a Battery

2.4.2 Inspect the Desiccant – Battery Module

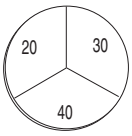

A humidity indicator is mounted inside each battery cap on the Battery Module. The humidity indicators have regions that display 20, 30, and 40 percent humidity levels. Ideally each region should be completely blue. As the desiccant becomes saturated, the humidity levels will increase and the regions turn pink. When the 40 percent region turns pink, the Battery Module is no longer adequately protected and the desiccant must be replaced. Refer to section 5.4 for replacement instructions.

2.4.3 Inspect the Desiccant – AV Module

A desiccant cartridge is inserted into the side of the AV Module. The cartridge is filled with silica gel beads that will indicate when they are saturated. When dry, the beads are yellow or blue. As the desiccant becomes saturated, the humidity levels will increase and the beads turn green or pink. If the entire length of the desiccant cartridge turns green or pink, the reference air is no longer adequately protected and the desiccant must be replaced. Refer to section 5.4 for replacement instructions.

⚠ CAUTION

Operating the AV Module and sensor with saturated desiccant can cause many problems such as drifting level readings and permanent damage. It is important that the equipment is serviced often enough to prevent the entire desiccant cartridge from becoming saturated.

2.4.4 Connecting the Modules

The 2100 Series System is modular; you build the system by connecting modules together. The instructions in this section describe how to connect an AV Module to a Battery Module in its most basic configuration — by stacking the two modules. Either module may be stacked on the other, but you may find it more

convenient if you place the Battery Module at the bottom of the stack. This keeps the heavier items lower in the stack making it easier to transport or store.

Other modules may be attached to this stack to increase the site's functions. You can add many modules to the stack as long as each module uses a unique module name (Section 3.2.1), and as long as you observe the power requirements of the extra modules.

Connection options

Keep in mind that stacking is not the only way to connect modules. The modules may be placed in remote locations and still operate as a single site. If you would like to use remote modules for your application, please consult with the factory or your representative to realize the full potential of your system.

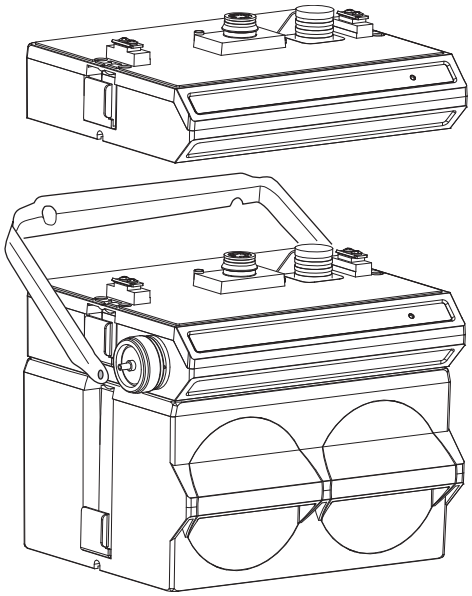

Figure 2-4 Assembling a system (shown: 2 flow modules with 1 battery module)

Connecting the Modules

To connect the AV and Battery modules, refer to the following instructions and Figure 2-4.

1. On the top of the Battery Module, remove the cap and stow it on the holder. This exposes the communication connector on the Battery Module.
2. Prepare the Battery Module's communication connector:
   a. Inspect the connector. It should be clean and dry. Damaged O-rings must be replaced. Spare O-rings (Isco P/N 202-1006-69) are supplied in the maintenance kit (60-2099-001).
   b. Spray the O-ring's sealing surface with a *silicone* lubricant.

Note

Do not use petroleum-based lubricants. Petroleum-based lubricants will cause the O-ring to swell and eventually deteriorate. Aerosol silicone lubricant sprays often use petroleum based propellants. If you are using an aerosol spray, allow a few minutes for the propellant to evaporate before proceeding.

3. Place the carrying handle on the Battery Module. (If you are stacking several modules, it is recommended that you position the handle between the top two modules.)
4. Unlock the AV Module's latch by pressing in on the latch release (right side).
5. Underneath the AV Module, remove the cap from the lower communication connector and stow it in the holder.
6. Lock the latch. Locking the latch correctly seats and aligns the lower cap in its holder.
7. Position the AV Module over the Battery Module. Align the connectors and lower the AV Module onto the Battery Module.
8. Unlock the AV Module's latch by pressing in on the latch release (right side).
9. Firmly press the modules together and lock the AV Module's latch (left side).

The Communications indicator will blink during the start-up routine to indicate the AV Module is operating.

Note

Unused communication ports on the top and bottom of the stack must be capped. The connector caps terminate the communication lines and protect the pins.

2.4.5 Installing the modules

The modules should be secured at the site. This prevents damage caused by accidental falls and from being swept away if the channel is flooded. In manholes, the modules are often secured to a ladder rung, or suspended from a spreader bar. Teledyne Isco's Customer Service Department or your local representative can assist you with installation options.

As you complete the installation, the following should be checked before leaving the site unattended:

1. The modules should be positioned where they will be protected from submersion. Should the modules become submerged, level readings may drift and the hydrophobic filter will seal to protect the reference air line. If the possibility of *short-term* submersion cannot be avoided, you can prevent the drifting level readings and damage to the hydrophobic filter. Attach a length of 1/8 inch I.D. tubing (Isco P/N 60-2003-104) to the hydrophobic filter. Route the other end of the tubing to a dry location.

Note

To protect the AV Module and sensor, the hydrophobic filter seals off the reference air line when it is exposed to excessive moisture. When sealed, the filter prevents irreparable damage, yet may cause the level readings to drift. This single-use filter must be replaced once it becomes sealed. See Section 5.6.1 for more information.

CAUTION

Long-term submersion (several hours or more), may permanently damage the modules and sensors.

2. Ensure that all of the protective caps are in place. Unused upper and lower communication connections must be capped. The caps prevent damage and terminate the communication lines. Caps for any communication connectors that are in use should be properly stowed. Like the module and sensor connections, the protective caps and their O-rings should be cleaned and coated with a silicone lubricant. Damaged O-rings must be replaced (Isco P/N 202-1006-69).
3. Carefully route cables. Protect them from traffic in the area. Avoid leaving excess AV Sensor cable in the flow stream where it may collect debris.

2.4.6 Connecting the AV Sensor

The AV Sensor cable attaches to sensor receptacle on the AV Module.

To connect the AV Sensor (refer to Figure 2-5):

1. Remove the protective caps:
   a. On the AV Module, push down on the sensor release while pulling the protective cap from the receptacle.
   b. On the AV Sensor cable, pull the cap from the end of its connector.
2. Prepare the AV Sensor connector:
   a. Inspect the connector. It should be clean and dry. Damaged O-rings must be replaced. Spare O-rings (Isco P/N 202-1006-69) are supplied in the maintenance kit (60-2059-001).
   b. Spray the O-ring's sealing surface with a *silicone* lubricant.

Note

Do not use petroleum-based lubricants. Petroleum-based lubricants will cause the O-ring to swell and eventually deteriorate. Aerosol silicone lubricant sprays often use petroleum based propellants. If you are using an aerosol spray, allow a few minutes for the propellant to evaporate before proceeding.

3. Align and insert the connector. The sensor release will "click" when the sensor connector is fully seated.
4. Connect the two caps together.

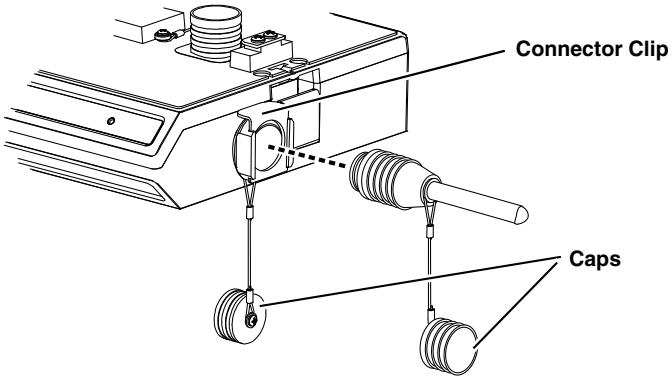

Figure 2-5 Connecting the AV Sensor

2.4.7 Installing the AV Sensor

See Section 2.6 for a summary of sensor mounting options for round pipe installations. Sensor installation is discussed in detail in *Isco's Mounting Rings Instruction Manual*. The manual explains how to mount the low profile AV Sensor in flow streams using spring rings, scissors rings, a street level installation tool, and mounting plates.

Several factors concerning the AV Sensor's installation may affect your system's performance. Please review the following to understand how to obtain the best results:

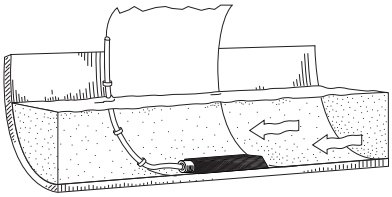

Ideal Conditions - Uniform Flow

Uniform flow - The AV Sensor provides the best results in flow streams with uniform flow. An example of uniform flow is shown in the margin.

Avoid poor channel conditions - Poor channel conditions may cause incorrect or erratic readings. Areas to avoid are:

- outfalls or channel intersections
- flow streams at very low levels with high flow rates
- turbulence
- channel sections that are apt to collect debris or silt
- depths that consistently run below 1 inch (25 mm).

Install the AV Sensor in streams where the liquid covers the sensor. The AV Sensor can detect levels above approximately 0.033 feet (0.4 inch or 1.0 cm) and typically can measure velocities in streams as low as 0.08 ft (1 inch or 25 mm). Streams that run consistently below 1 inch are not a good application for the 2150 Module and AV Sensor.

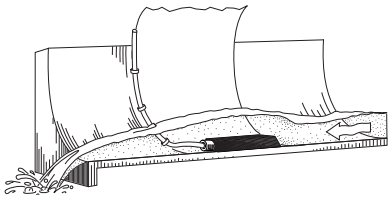

Poor Conditions

The example in the margin shows a few of these poor conditions. The outfall is drawing down the liquid level and the AV Sensor is disturbing the flow. In this example, the AV Sensor should be moved forward to avoid the drawdown near the outfall.

Offsets - You can install the AV Sensor above the bottom of the flow stream or along the side of the channel, as long as it will be continually submerged. The AV Module can be calibrated to measure level with the AV Sensor at nearly any depth. The AV Sensor cannot, of course, measure a liquid level that falls below its position in the flow stream. Installing the AV Sensor above the bottom has several advantages:

- It avoids heavy concentrations of silt, sand, or other solids.
- It aids installation in narrow or hard-to-reach locations.
- It maximizes level resolution over a specific level range.
- It can avoid obstructions in the flow stream.

When the AV Sensor is installed above the bottom of the channel, a *Zero Level Offset* must be entered in the program settings.

Liquid properties - Velocity measurements depend on the presence of some particles in the stream such as suspended solids or air bubbles. If the stream lacks particles it may be necessary to aerate the water upstream from the sensor.

Handle with care - Abusive handling will damage the AV Sensor. Although the AV Sensor will survive normal handling and installation, treat the sensor with reasonable care. The internal components cannot be repaired.

Protect the cable - There is a vent tube inside the cable that must remain open. Do not kink the cable or overtighten the plastic ties while securing the cable.

Secure the cable - Teledyne Isco recommends that you secure the cable in place. Tying off the cable can often prevent lost equipment if excessive flow dislodges the sensor and its mounting.

2.4.8 Program the Module

After you have installed the AV Sensor in the flow stream, the flow stream properties must be defined. To do this, connect to the AV Module with *Flowlink for Windows* software and define the stream properties in the AV Module's program settings. These ensure that the system correctly reads the liquid level and converts the measured level to flow rate.

Note

The 2100 System requires Flowlink 4.1or later. Earlier versions do not support 2100 System instruments.

Referring to Section 3, define the following properties:

- **Level** – Enter a liquid level measurement to calibrate the level readings from the AV Sensor (3.3.1).
- **Zero Level Offset** – If the AV Sensor is not installed in the bottom-center of the channel, an offset distance must be entered (3.3.2).
- **Set Flow Rate to zero if no velocity data checkbox** - Determines how the AV Module reports flow rates if stream velocity data is not available (3.3.3).

- **Prevent velocity signal interference** – When more than one sensor is measuring the same section of channel, the ultrasonic sound waves can interfere with each other. AV Modules can be synchronized to prevent velocity signal interference (3.3.4).
- **Flow Conversion** – The AV Module can store flow rate readings. To correctly convert the measured level and velocity readings to a flow rate, the flow conversion method and channel properties should be defined (3.3.5).
- **Silt Level** – *(Area Velocity Flow Conversion Only)* The AV Module can compensate for a build up of silt around the AV Sensor (3.3.6).

These six settings should be considered a minimum requirement. Other settings, such as *Data Storage Rates*, *Site Name*, and *Module Names*, also may be set using Flowlink. Section 3 describes how you can modify these other settings.

2.4.9 Basic Installation Checklist

As a review, the following steps may be used as a guide to install a 2150 Module at a basic site. In this example, a basic site is a single AV Module and AV Sensor, and a Battery Module. Your steps may differ if you have selected an alternative power source, or if you are installing additional modules.

1. Prepare the Battery Module.
   a. Install batteries (Section 2.4.1).
   b. Inspect desiccant (2.4.2).
2. Inspect AV Module desiccant (2.4.3).
3. Assemble the system.
   a. Connect the modules (2.4.4).
   b. Attach the AV Sensor cable to the AV Module (2.4.6).
4. Install the AV Sensor in the flow stream. Refer to *Isco Mounting Rings Instruction Manual* (2.4.7).
5. Connect to the site with *Flowlink for Windows* software (2.4.8).
   a. Create the site by Quick Connecting to the modules.
   b. Set up the site and module settings.
   c. Calibrate the level measurement.
6. Disconnect from the site and replace all protective caps.
7. Mount or suspend the modules (2.4.5).

2.5 Site Example

Figure 2-6 illustrates a visit to a round-pipe site that uses several optional components. Key items are explained below:

The computer running **Flowlink** communicates with the modules. With Flowlink, you can name the site, set up its operation, and adjust the level measurement. To assist with servicing, Flowlink also will display input power voltage (an indication of remaining battery life) and collect diagnostic reports.

A **communication cable** connects the computer and site. The cable supports the data transfers between the two.

> ☑ ***Note***
>
> Earlier versions of the 2150, as well as some other system components including cables, have lower voltage limits and cannot be connected in systems powered by more than 16.6 VDC. Refer to Section 2.2.2 for complete information.

A **spreader bar** is used to suspend the modules in a manhole. Spreader bars are adjustable to fit openings from 22.5 to 48 inches (60 to 120 cm).

The **2150 Area Velocity and Battery Modules** measure and store the stream data.

The **Street Level Installation Ring Release Strap** is tied to a rung inside the manhole. When it is necessary to retrieve the AV Sensor and mounting ring, pulling on the strap releases the ring from the pipe so you can lift it from the manhole.

The **AV Sensor cable** is routed carefully without kinks or sharp bends. Any excess cable is kept out of the channel to prevent debris from collecting.

The **Street Level Installation Ring** was set in place using Isco's Street level Installation Tool. The tool is an adjustable, multi-section pole that allows you to insert the ring and AV Sensor into a round pipe without entering the manhole.

The **AV Sensor** is positioned in the flow stream to measure liquid level and velocity.

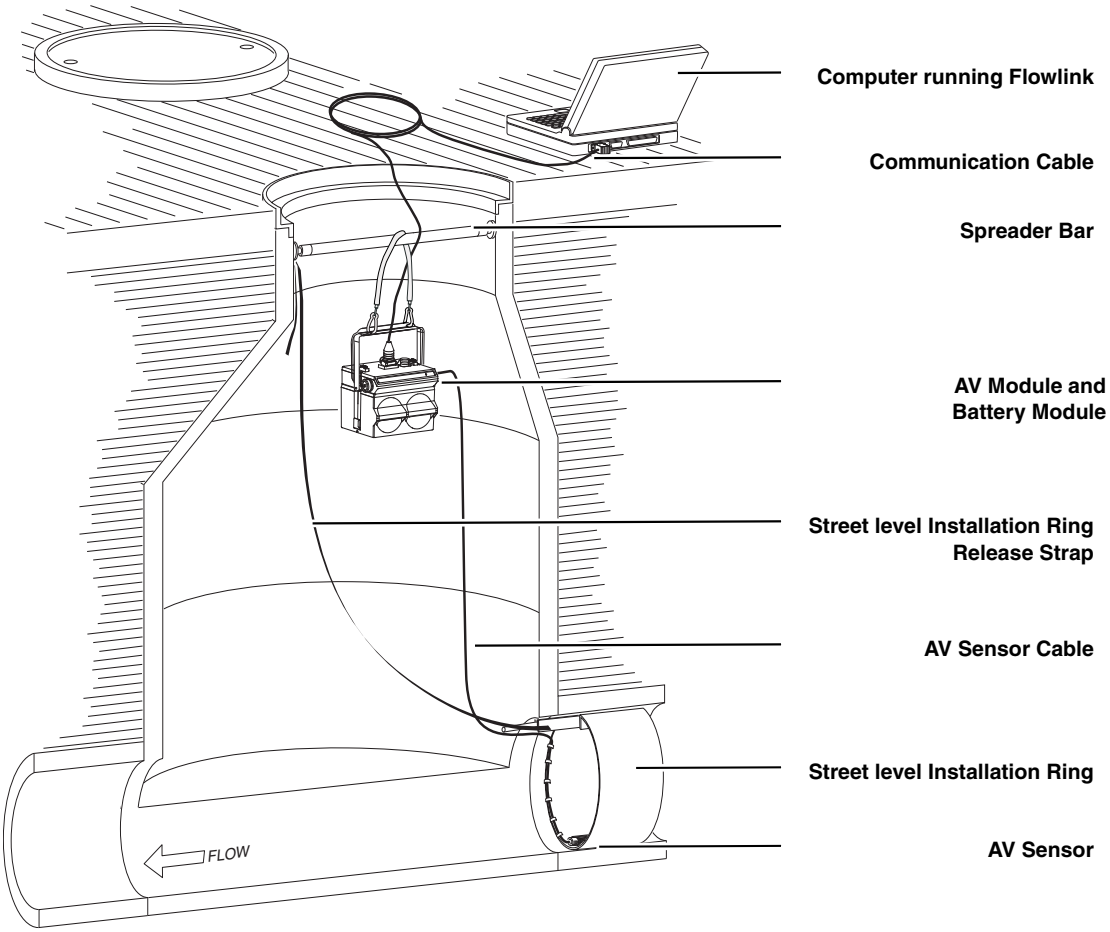

Figure 2-6 Typical Round-pipe Installation

2.6 Mounting Rings

Consult your Isco Mounting Rings Installation and Operation Guide for detailed hardware information.

The following sections describe sensor installation using the two options available for mounting the AV sensor in pipes or round-bottomed flow streams. For pipes up to 15" (38 cm) in diameter, **stainless steel self-expanding mounting rings** (**Spring Rings**) are available. For pipes larger than 15" in diameter, Teledyne Isco offers the **Scissors Rings (Universal Mounting Rings)**. Area velocity sensors can also be installed using primary measuring devices.

2.6.1 Spring Rings

To install a spring ring, compress the ring, slip it inside the pipe, and then allow it to spring out to contact the inside diameter of the pipe. The inherent outward spring force of the ring firmly secures it in place. A typical self-expanding mounting ring (with a probe mounted on it) is shown in Figure 2-7.

These mounting rings are available for use in pipes with inside diameters of 15.2 cm (6"), 20.3 cm (8"), 25.4 cm (10"), 30.5 cm (12"), and 38.1 cm (15"). The Isco part numbers for the various size mounting rings available are listed in Appendix B. These part numbers include not only the ring, but also the miscellaneous hardware necessary to mount the sensor on the ring.

⚠ CAUTION

Always wear leather gloves when handling the rings (either type). The metal is finished, but there is still a possibility of cutting your hands on the edges.

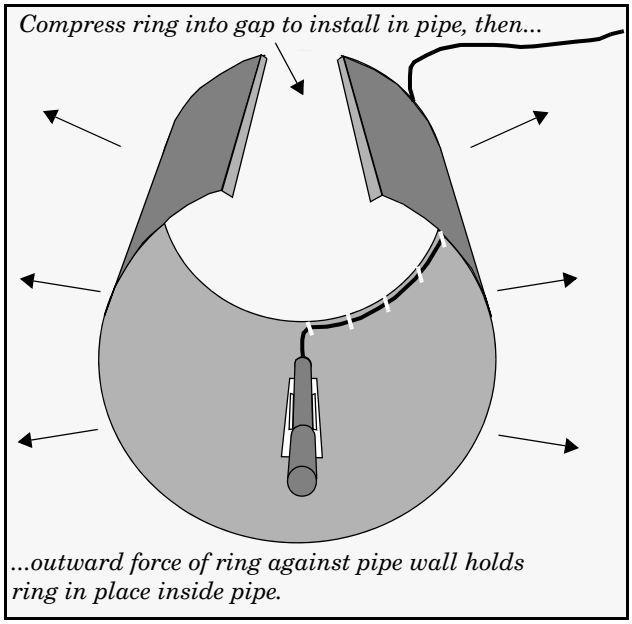

Figure 2-7 Sensor Installed on a Spring Ring

Attaching the Sensor to the Ring

Attach the AV sensor to the ring either by using two 4-40 countersink screws or by snapping the optional probe carrier to the ring. This second method of attaching the sensor allows for easy removal in case service is needed later.

⚠ CAUTION

Make sure the slots on the AV sensor carrier are completely pressed into the tabs on the ring. This is particularly important where there is any possibility of reverse flows, or where flows are of high velocity. If the AV sensor is not fully pressed into the mounting ring tabs, it might come loose in the stream, and could possibly be damaged or lost.
Make sure the sensor cable is securely fastened along the back (downstream) edge of the ring. Otherwise, the sensor may provide **inaccurate level readings** under conditions of high velocity.

To complete the sensor-spring ring assembly procedure, attach the sensor cable to the downstream edge of the ring. Follow the cable routing shown in Figure 2-7. Other routing directions may affect measurement accuracy. The cable can actually create a stilling well downstream from the sensor, causing the level to read low. Use the self-locking plastic ties supplied with the ring. Install the ring in the pipe by compressing it. Press inward on both sides and slide the ring into the pipe.

Route the sensor cable out of the stream and secure it in position by placing the ties through the holes in the mounting ring and then locking them around the cable, as shown in figure 2-7.

⚠ CAUTION

Do not overtighten the plastic cable ties; they should be tightened just enough to secure the cable in place, without greatly indenting the cable. Overtightening the plastic ties may collapse the reference tube in the cable, blocking it.

The spring ring may need anchoring. Under conditions of high velocity (greater than 1.5 meters per second or 5 feet per second), the ring may not have sufficient outward spring force to maintain a tight fit inside the pipe. The ring may start to lift off the bottom of the pipe, or may even be carried downstream.

This problem is more prevalent in the larger diameter pipes and in pipes with smooth inside surfaces, such as plastic pipes. If any of these conditions are present, or if movement of the mounting ring is detected or suspected, you must anchor the ring in place. You can do this by setting screws through the ring into the pipe, or by other appropriate means. If there is a problem with the smaller diameter rings, it may be sufficient to simply increase the outward spring force of the ring by bending it into a less round configuration.

2.6.2 Scissors Mounting Ring

For pipes larger than 15" in diameter, Teledyne Isco offers the adjustable Scissors Ring (also known as the Universal Mounting Ring). This device consists of two or more metal strips that lock together with tabs to form a single assembly. There is a base section where the sensors are mounted, two or more extension sections (usually), and a scissors section at the top that expands the entire assembly and tightens it inside the pipe. The scissors section contains a long bolt that increases the length of the section as it is tightened.

The assembled scissors rings fit pipe diameters from 16" to 80". Secure the unit in place by tightening the scissors mechanism with a 5/8" socket wrench or other suitable tool. Ring sections are .040" thick half-hard 301 stainless steel sheet. All other parts are also stainless steel, except for the plastic cable ties in the hardware kit.

Each extension, 1, 2, 3, and 4, adds 9.0", 21.5", 31.5", or 41.5", respectively, to the circumference of the ring. Used alone, the base section fits a pipe that is approximately 16" to 19" in diameter. The 9.0" (smallest) extensions can be used to take up or remove slack, to bring the scissors mechanism into a position where it can be effectively tightened.

Note

The hardware kit includes flat head bolts and nuts.Teledyne Isco strongly recommends bolting the assembled scissors ring together before installation, using the holes provided for that purpose. Bolting the tongue sections together can greatly increase safety and prevent the assembly from being torn apart.

Do not overtighten the mechanism. It is designed to flex somewhat to provide a positive lock, once moderately tightened.

For installations in larger channels and/or high flow, extensions 2, 3, and 4 have slots for attaching the ring to the channel wall using appropriate anchoring hardware.

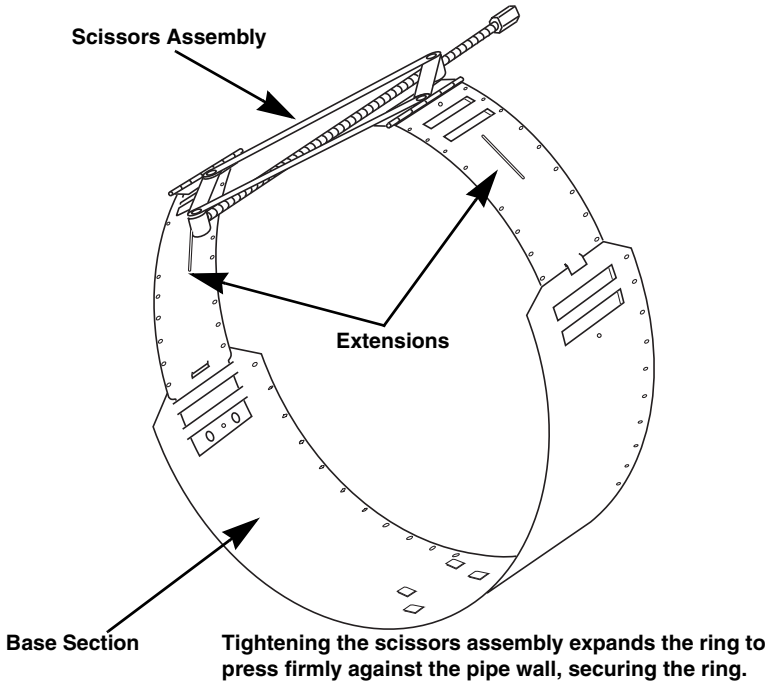

Figure 2-8 Scissors Ring adjustment

To prevent debris from catching on the probe cable, it is important to attach the cable to the mounting ring so it offers as little resistance to the flow as possible. Attach the sensor cable to the downstream edge of the ring, using the self-locking plastic ties supplied with the ring. Place the ties through the holes in the mounting ring and then lock them around the cable.

⚠ CAUTION

Do not overtighten the plastic cable ties; they should be tightened just enough to secure the cable in place, without greatly indenting the cable. Overtightening the plastic ties may collapse the reference tube in the cable, blocking it.

2.6.3 Completing the AV Sensor Installation

The AV sensor installation is finished by securing any excess sensor cable using cable clamps or other means.

The reference tube inside the cable can be restricted or blocked if the cable is kinked, sharply bent, coiled, or otherwise pinched. The sensor cable should be handled and mounted with care. Also, if there is any appreciable distance between the point where the sensor cable leaves the mounting apparatus and the location of the flow meter, *be sure* to attach the cable to the flow stream wall to prevent it from vibrating, moving around, tangling, or possibly collecting debris.

⚠ CAUTION

Under no circumstances should you leave any extra length of sensor cable dangling freely in the flow stream where it could trap debris or become tangled.

Use gloves and eye protection when assembling and installing the rings in a pipe. Though deburred, the edges of the stainless steel can cut if improperly handled. *Please read the information in the Isco Mounting Rings Manual on how best to install this device.*

Observe general safety procedures when entering any manhole. See “General Safety Procedures” in the back of this manual for more information on general hazards and necessary precautions.

2150 Area Velocity Flow Module

Section 3 Programming

3.1 Section Overview

This section describes how to set up the operation of a 2150 Module using Isco's Flowlink for Windows software.

Flowlink Help

Detailed Flowlink instructions are beyond the scope of this manual. Flowlink's operating instructions are available in a Windows Help format. You can access the help topics for an active window by clicking on its *Help* button or by pressing F1 on your computer's keyboard. You can also access Help topics from a Contents and Index window (HELP>CONTENTS AND INDEX from the Flowlink menu).

3.2 Flowlink Connections

Make the necessary wiring connections to allow your computer to communicate with the site. Figure 3-1 shows a connection using Isco's *RS232 Communication Cable*, Isco part #60-2004-507.

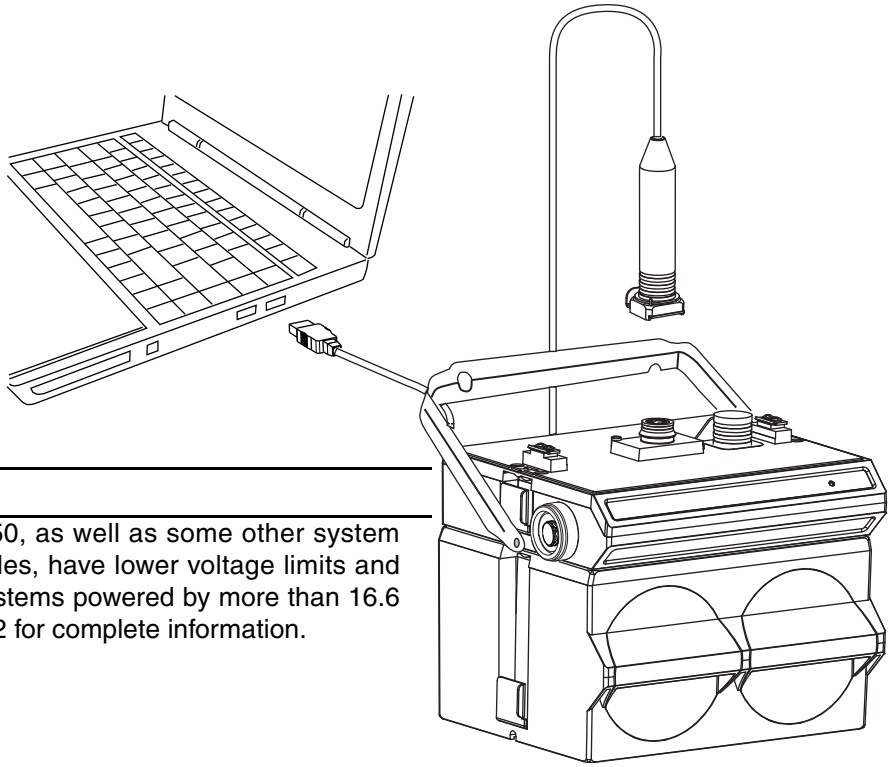

☑ Note

Earlier versions of the 2150, as well as some other system components including cables, have lower voltage limits and cannot be connected in systems powered by more than 16.6 VDC. Refer to Section 2.2.2 for complete information.

Figure 3-1 Flowlink connections

An easy way to begin Flowlink communications with the site is to *Quick Connect*. As a default Flowlink setting, the Quick Connect dialog box opens when you start Flowlink. Click on the large *2100 Instruments* button to connect. Flowlink will read the 2100 system information and try to match it with an existing site in the open database. If Flowlink cannot find a match for the connected site, it creates a new site in the database.

3.2.1 Communication Resolution

During the connection process, Flowlink checks the stability of the site's communications. If communication is found to be unstable, Flowlink presents the *Communication Resolution* window.

There are two common causes of unstable communications. One cause is a Module Name conflict, which may occur when two or more modules at a site use the same module name. The second cause is a Site Name conflict, which occurs when a module added to the site indicates that it belongs to a different site.

The Communications Resolution window lets you choose how the modules should be reconfigured and which Site Name should be retained. To resolve the communications, select the sites and modules that should be reconfigured and click the OK button. Be aware that reconfiguring a module removes the Site Name, Module Name, program settings, *and any stored data*. The module is then restarted with the stable Site's Name, a default Module Name, and default program settings, and the data storage is ready to accept new data.

3.3 Program Settings

While connected, Flowlink displays the *Site View* window. This window contains all of the program settings that control the site's operation. The settings are grouped, or categorized, using five tabs: Measurements, Site Info, Modules, Data Storage, and a variable tab used to set up the various measurement types.

Essential Settings

Some program settings are essential to the operation of an AV Module and its attached AV Sensor. Five program settings should always be verified when you are setting up a new site:

- **Level** – Enter a liquid level measurement to calibrate the level readings from the AV Sensor (3.3.1).
- **Zero Level Offset** – If the AV Sensor is not installed in the bottom-center of the channel, the distance the AV Sensor is offset must be entered (3.3.2).
- **Set Flow Rate to zero if no velocity data checkbox** - Determines how the AV Module reports flow rates if stream velocity data is not available (3.3.3).
- **Flow Conversion** – The AV Module can calculate flow rate readings. To correctly convert the measured level and velocity readings to a flow rate, the flow conversion method and channel properties should be defined (3.3.5).
- **Silt Level** – The AV Module can compensate for a build up of silt around the sensor (3.3.6).

These five program settings directly affect the data collection. Incorrect settings may introduce errors in the measured data, many of which may prove to be difficult to correct afterwards.

Data Storage Settings

You should also check the Data Storage Rates while you are reviewing the program settings. You can view the storage rates on the Data Storage tab to ensure that pertinent types of data are being stored, and that the rates will provide a sufficient amount of data for your application. Refer to section 3.3.7 for instructions on how to modify the data storage rates.

General Settings

Once the site's communication has been resolved, the Site and Module Names may be changed to help you better manage the sites and data collection. Giving sites descriptive names such as "12th and Main Streets" can help you easily recognize the measurement locations, instead of generic terms such as "Site 1." Site and Module Names are discussed in sections 3.3.8 and 3.3.9.

Changing a Setting

After modifying a setting as described in sections 3.3.1 through 3.3.9, click on the APPLY button (or press F9 on your keyboard). Flowlink sends the change to the module and updates the site's settings in its Flowlink database.

3.3.1 Level

A measurement of the actual liquid depth should be taken to calibrate the level readings. The value of this measured depth should be entered on the *Level* measurement tab in Flowlink.

Note

Before calibrating the level, allow a newly installed AV Sensor to stabilize under the stream conditions. If the sensor undergoes wide temperature variations between its storage and operating environments, it may take several minutes to stabilize.

Measurement Location

The location of your measurements can affect the flow conversion results. An understanding of how the AV Sensor measures level and velocity will help you determine where the measurements should be taken.

The AV Sensor transmits an ultrasonic sound wave. It propagates from the front of the sensor in a cone-shaped pattern. From within this cone, the AV Sensor measures the stream velocity. Therefore, your level measurement should be taken from a point inside the cone. Since this cone cannot be seen, a general rule is to measure in front of the sensor along the channel centerline at a distance equal to the liquid depth. For example, if the stream is one foot deep, take the level and channel dimension measurements one foot upstream from the sensor. If the flow at this point is turbulent, consider relocating the sensor.

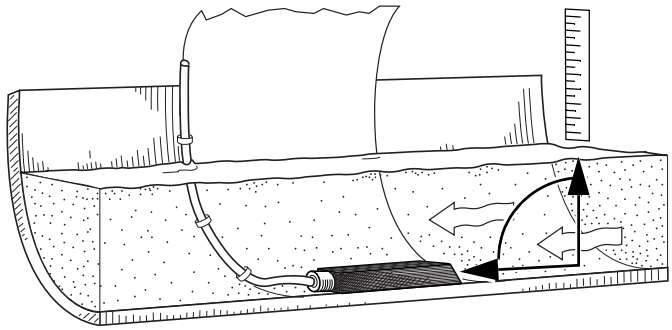

Figure 3-2 Preferred Measurement Location

Do not measure the level and channel dimensions right at the sensor, as the sensor and the mounting ring may cause a slight "jump" or localized rise in the level. At very low levels and high velocities, this jump in the liquid surface may become quite significant.

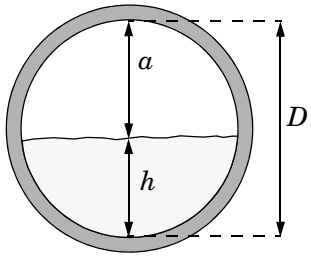

Level (h) = D – a

In round pipes you can measure the level without disturbing the stream surface. This method is preferred. Refer to the diagram to the left. First measure the inside diameter of the pipe (*D*). Then measure the airspace (*a*) from the liquid surface to the peak of the inside diameter. Average this measurement if the surface is not calm. The level measurement you enter (*h*) is calculated by subtracting the distance above the liquid (*d*) from the diameter (*D*).

If difficult channel conditions keep you from making the measurements as described above, another site should be considered. If this is impossible, you may opt for an alternative level calibration method. The method described below will often yield better results than entering a "best estimate" of the liquid level, but results within the listed performance specifications *may be compromised*.

Alternative Level Calibration

1. Fill a bucket with 6 to 12 inches (15 to 30 cm) of water.
2. Place the AV Sensor upside-down in the bucket of water to allow any air bubbles trapped under the sensor to escape.
3. After a few minutes, place the AV Sensor right-side up at the bottom of the bucket.
4. With the AV Sensor flat against the bottom of the bucket, measure the distance from the bottom surface of the bucket to the liquid surface. Enter the distance on the *Level* measurement tab in Flowlink.

3.3.2 Zero Level Offset

AV Sensors are sometimes offset in the channel to avoid heavy concentrations of silt, or to maximize the level resolution over a specific range. When the AV Sensor is offset, an offset distance must be entered on the *Velocity* measurement tab in Flowlink.

Refer to Figure **3-3**. Enter a value for the vertical distance the sensor is installed above the true zero level of the stream. For example, if the sensor is mounted on the side of the pipe two inches higher than the true zero level (the bottom center of the pipe), the Zero Level Offset is two inches. If the sensor is mounted at the bottom of the channel, enter zero.

Note

Do not confuse the circumferential distance between true zero and the location of the AV Sensor with the vertical distance (height). If you install the AV Sensor at the true zero level of the pipe or channel, you would enter “0” for the offset (ignoring the thickness of the mounting ring).

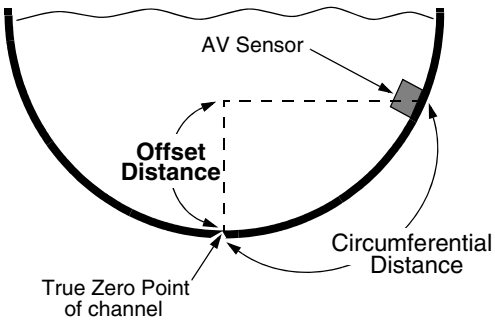

Figure 3-3 Zero Level Offset Measurement

3.3.3 No Velocity Data and Flow Rates

Occasionally velocity readings are lost because either a flow stream does not contain enough reflective particles, or the sensor is covered with silt. These lost velocity readings are logged as a “No Data Code.” If the AV Module is set up to use area velocity flow conversion, it is then unable to calculate the flow rate. You can control how the Flow Rate readings will be reported during these conditions with the “Set flow rate to zero if no velocity data” checkbox, found on Flowlink’s *Velocity* measurement tab.

- Checked, the AV Module stores the flow rate as 0.0 when velocity data is not available.
- Unchecked, the AV Module will use last valid velocity measurement in the flow rate calculation.

Note

Measuring velocity becomes extremely difficult at low liquid levels. When the level falls below one inch, the module no longer measures the velocity. Instead, velocity is interpolated based on measurements that occurred between one and seven inches of liquid.

3.3.4 Prevent Velocity Signal Interference

If the AV Sensors of a multiple module site are placed near each other it is important that each sensor receives its own transmitted signal. To prevent this sort of interference, you can synchronize the modules so that only one module may take a velocity measurement at any given moment.

To synchronize the velocity measurements of a multiple module site, check the *Prevent interference* box found on the *Velocity* measurement tab. You may leave this box unchecked for single module sites or multiple module sites measuring velocities of separate channels.

3.3.5 Flow Conversion

The AV Module is capable of determining flow rates using either area velocity conversion or level-to-flow rate conversion. Table **3-1** lists the available flow conversion methods.

The AV Module is capable of calculating and storing any two conversion methods simultaneously. Flow conversions are defined on the *Flow Rate* and *Flow Rate 2* measurement tabs in Flowlink. To do this, select the *Conversion Type* that matches your application, then enter the required parameters in the fields to the right of the selected conversion type.

Table 3-1 Flow Conversion Methods

Conversion Type		Device, Formula, or Table	Size or Parameters
Area Velocity	**Channel Shape**	Area × Velocity	Round Pipe, U-Channel, Rectangular, Trapezoidal, Elliptical
	Level-to-area Data Points	User-developed Table	3 to 50 data points
Level to Flow	**Weir**	V-Notch Weir	22.5, 30, 45, 60, 90, 120 degrees
		Rectangular Weir with end contractions	Crest Length
		Rectangular Weir without end contractions	Crest Length
		Thel-Mar	6, 8, 10, 12-14, 15-16 inches
		Cipoletti Weir	Crest Length
	Flume	Parshall Flume	1, 2, 3, 6, 9 inches 1, 1.5, 2, 3, 4, 5, 6, 8, 10, 12 feet
		Palmer-Bowlus Flume	4, 6, 8, 10, 12, 15, 18, 21, 24, 27, 30, 48 inches
		Leopold-Lagco	4, 6, 8, 10, 12, 15, 18, 21, 24, 30 inches
		“HS” Flume	0.4, 0.6, 0.8, 1.0 feet
		“H” Flume	0.5, 0.75, 1, 1.5, 2, 2.5, 3, 4.5 feet
		“HL” Flume	4.0 feet
		Trapezoidal Flume	Large 60-degree V Extra Large 60-degree V 2-inch, 45-degree WSC 12-inch, 45-degree SRCRC
	Flow Metering Insert	V-notch	6, 8, 10, 12 inches
		Round Orifice	6, 8, 10, 12 inches
	Manning Formula	Round Pipe	Slope, Roughness, Diameter
		U-Channel Pipe	Slope, Roughness, Width
		Rectangular Pipe	Slope, Roughness, Width
		Trapezoidal	Slope, Roughness, Bottom Width, Top Width
	Equation	Flow = 0.00*(Head^0.00) + 0.00*(Head^0.00)	
	Level-to-Flow Rate Data Points	User-developed tables for level-to-flow rate	3 to 50 data points

If the selected flow conversion requires channel dimensions, actual channel measurements should be taken. Channel measurements are preferred over nominal values. Significant errors may be introduced if your measurements are inaccurate. The example below illustrates the importance of accurate measurements.

Example:

Nominal Pipe Diameter:	10 inches
Actual Pipe Diameter:	10.25 inches
Level Measured Near Outfall:	2.75 inches
Correct Level Measurement:	3 inches

During programming, you enter 10 inches for the round pipe diameter - from the pipe manufacturer's specification. You also enter the 2.75 inch level measurement taken behind the sensor near an outfall. Although each setting has only a 0.25 inch error, the cumulative flow measurement error may exceed 14%!

Refer to the discussion on *measurement location* in section 3.3.1, and Figure 3-2 to determine where to measure the channel dimensions.

3.3.6 Silt Level

Silting in the flow stream will alter your channel dimensions, affecting the flow rate conversion. To compensate for a buildup of silt, a *Silt Level* value can be entered on the *Flow Rate* measurement tab in Flowlink. Silt level compensation is only available when using Area Velocity flow conversion.

3.3.7 Data Storage Rates

The data storage function of an AV Module can record level, velocity, flow rate, total flow, and input voltage readings. The interval at which the AV Module stores the readings is called the *Data Storage Rate*. The AV Module is shipped with default storage rates of 15 minutes for the level, velocity, and flow rate, and 1 hour for total flow and input voltage readings.

You can modify the data storage rates to log readings at a faster or slower rate. Keep in mind that although the AV Module can store data as fast as 1 reading every 15 seconds, faster storage rates will shorten battery life, increase memory usage, and lengthen *Retrieve Data* (interrogation) times.

You can also create conditional data storage rates. The AV Module can log data at a secondary rate when user-defined conditions have been met. For example, an AV Module can store level readings at a primary rate of 15 minutes, and a secondary rate of 1 minute when the level reading is greater than or equal to 1 foot. Secondary rates allow you to collect detailed data when defined events of interest occur, while reducing power and memory consumption when detailed readings are not needed.

To modify the Data Storage Rates, first click on the *Set Up Data Storage…* button on a measurement tab. Then enter the Primary and Secondary Rate settings on the *Data Storage Setup* window. Repeat this for each measurement type.

3.3.8 Site Name

The modules are shipped with default names so that they can immediately begin to communicate with Flowlink. You can change the site name to a more descriptive name on the *Site Info* tab in Flowlink. Keep in mind that the name must be unique among the other site names in the open Flowlink database.

Site names can be up to 20 characters long. Any character may be used in the name except:

/	forward slash	\	back slash
:	colon	*	asterisk
?	question mark	“	double-quote
<	left angle bracket	>	right angle bracket
|	bar	&	ampersand

3.3.9 Module Name

The modules are shipped with default names so that they can immediately begin to communicate with Flowlink. You can change a Module Name to a more descriptive name on the *Devices* tab in Flowlink. Keep in mind that the name must be unique among the other module names connected at that site.

To help you match up a single module in a stack with its module name in Flowlink, the Devices tab includes an *Identify* button. To identify a module, highlight the Module Name, then click the Identify button. The module will turn on its front-panel light so that you can identify which module at the site corresponds with the highlighted Module Name.

Module names can be up to 20 characters long. Any character may be used in the name, except for those noted in *Site Name*, Section 3.3.8.

2150 Area Velocity Flow Module

Section 4 Modbus Output Protocol

Sections 4.1 through 4.5 give an overview of the basic capabilities and operation of Modbus protocol as it applies to Isco 2100 Series flow modules.

For a Glossary of Terms and Common Acronyms, see sections 4.4 and 4.5.

4.1 Introduction

Modbus is a simple command/response mechanism to read from and write to specific memory locations called *registers*. A register is a holding place for a piece of digital information within the equipment. There are three standard protocols for Modbus: Modbus RTU, Modbus TCP/IP, and Modbus ASCII. The Isco 2100 Series devices use Modbus ASCII protocol, the method discussed in this manual. Modbus ASCII has more liberal communication timing requirements. Modbus communication for the Isco 2100 Series provides a standard protocol that can be used to retrieve real-time data from a single module or stack of modules at a site, or multiple sites, over a wide area. The data can be sent to a central computer for display, data collection, or process control.

Modbus implementation is independent of Flowlink and cannot alter the Flowlink-programmed configuration of the module. Modbus cannot be used to retrieve historical data from a module's memory.

Due to the wide variety of configurations that can be made with Modbus, it is impossible to cover every usable application. This section will discuss the overall capabilities and operation of Modbus.

4.2 Operation

There are many standard, third party Modbus drivers and OPC servers that may be used to link a remote Modbus device, such as a 2100 Series module, to SCADA or process control software, such as Wonderware™ or Intellution™. The OPC server communicates with the remote instrumentation and accesses registers. The definition of what information is contained and where (the register number, or address) is decided by the manufacturer (Teledyne Isco).

In a 2100 module, the registers hold, but are not limited to, the current real-time value of the meter's level, velocity, flow, input voltage, temperature, and total flow readings, stored in specified register locations.

By accessing these registers you can obtain the current value of whatever parameter you desire. The reading(s) can then be displayed or stored wherever you designate as a destination; for example, a process control computer.

Note

Level, flow, velocity, and temperature data is stored in metric units only.

Not all registers are limited to read-only data storage. You can also use some registers for control purposes. For example, by writing a “1” value to register 24 (“Identify Module” register), you will tell a 2100 module to light the LED on the front of the module.

4.2.1 Establishing Communication

There are several different communications protocols supported in the 2100 series that require auto-baud rate detection. Because of this, each time a modbus connection is made, the module uses a polling mechanism to repeatedly send a command until a response is received. It may take up to 20 command retries before the module has identified the baud rate and a response is received.

4.2.2 Module Addressing

When connecting to a site via a Modbus OPC server, you use a dedicated line of communication to that module or stack from the OPC server, which can be a dedicated communications cable (direct connection) or a dedicated phone number (modem).

When you are using a direct connection, you are dedicating a specified COM port on the computer, and that COM port determines the site to which you are connecting.

When you are using a modem, the dedicated line is defined by the site's phone number.

If you connect more than one 2100 Series module at a site, the Modbus OPC server, while using the shared communication line for all of the modules within the network, must have some way to differentiate between the modules. When sending a command to a specific module, the command has an address field. This allows the server software to talk to, as well as control, the specified module, while ignoring other modules in the same stack or site.

Each module capable of Modbus Protocol communication will automatically create its own specific ASCII address within the site, using:

- The model numbers of the modules
- The user-defined module names

4.3 Configurations

A variety of configurations can be made with Modbus, either through direct connection or through a modem.

In the example shown in Figure 4-1, you are direct-connecting a server PC to two individual 2100 sites through Modbus, using the COM ports on the OPC Server, which are directly connected to the remote sites.

Connection to the module is made through the RS-232 communication port on the top of the module.

Note

For low power operation, we recommend connecting the module(s) to the computer using the straight-through cable (Isco part number 60-5314-529), which consumes less power, instead of our standard interrogation cable.

In Figure 4-1, the OPC Server PC must have two COM ports. Modbus requires one COM port each, for direct connection of each 2150.

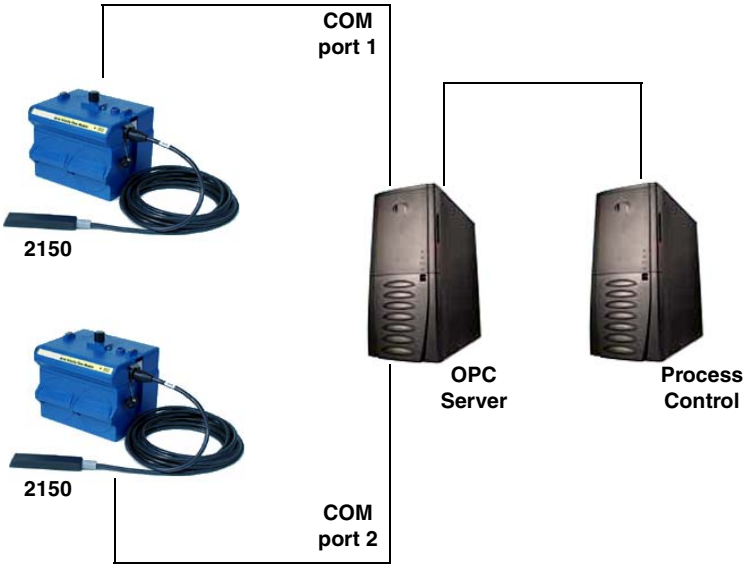

Figure 4-1 Configuration example

The operation sequence for the example above can be summarized in the following steps:

2150:

1. 2150s take readings from probes.
2. 2150s store readings (level, velocity, flow rate, etc.) in their specified registers.

Process Control:

3. The user requests data through Process Control.
4. Process Control asks the OPC server to gather information.

5. OPC connects to the 2150 stack through the cable (direct connection), takes register data from the specified 2150, and populates the OPC server's holding index.
6. Process Control takes data from the OPC server's holding index and gives data to the user.

Note that Process Control can be either manual or automated in this example, and that the OPC server and Process Control may be located physically on the same computer.

4.4 Glossary of Terms

ASCII – Short for American Standard Code for Information Interchange, ASCII is a code that represents English characters with numbers. Most computers represent text with ASCII code, making it possible for one computer or device to share data with another.

2100 modules support Modbus ASCII protocol.

Dedicated Line – A telecommunications path reserved for communication between two specified points and not shared among multiple points.

Modbus Protocol – Modbus Protocol is a messaging structure used to establish master-slave/client server communications between intelligent devices. Modbus is a simple command/response mechanism to read from and write to registers.

OPC – OPC (OLE for Process Control) means open connectivity via open (free for use) standards. It is a series of software standards specifications that fill a need in automation (like printer drivers did for Windows), acting as a translator for data transmission and process control.

The specification defines a standard set of objects, interfaces, and methods for use in process control and manufacturing automation applications to facilitate interoperability. There are hundreds of OPC Data Access servers and clients.

Registers – Registers are locations in memory that have specific data stored for retrieval or are used for control functions. A register is a holding place for a piece of digital information within the equipment. The definition of what is contained and where (the registry number, or address) is decided by the manufacturer (in this case Teledyne Isco).

SCADA – SCADA (Supervisory Control And Data Acquisition) is a computer system for gathering and analyzing real-time data. SCADA systems are used to monitor and control plant operation, or equipment in industries such as telecommunications, water and waste control, energy, oil and gas refining, and transportation.

The SCADA system transfers the information (for example, where a leak has occurred in a pipeline), back to a central site, alerting the home station of the leak, performing necessary analysis and control (such as determining if the leak is critical), and displaying the information in a logical and organized manner.

SCADA systems can be relatively simple, such as one that monitors the environmental conditions of a small office building, or very complex, such as a system that monitors all the activity in a nuclear power plant or a municipal water system.

4.5 Common Acronyms

ASCII – American Standard Code for Information Interchange

DCS – Distributed Control Systems

MTU – Master Terminal Unit

OPC – Object Linking and Embedding (OLE) for Process Control

PLC – Programmable Logic Controller

RTU – Remote Terminal Unit

SCADA – Supervisory Control And Data Acquisition

TCP/IP – Transmission Control Protocol/Internet Protocol

4.6 Register Specifications

All numbers in the Modbus registers are stored most significant byte first. If the polling device has a byte ordering of least significant byte first (an Intel-based PC, for example), the bytes will need to be reversed after they are received.

The Modbus ASCII address is used to index the data by modules.

Modbus ASCII address 1 contains information related to the site. The first register contains a 16-bit integer count of the number of modules that have data to report. The maximum number of modules that can be supported is 4.

Modbus ASCII addresses 2 through the number of the module in the stack (N) minus 1 contain data from the individual modules.

The Modbus ASCII addresses will be sorted by the model number, and then by module name, which is entered by the user through Flowlink. This allows the user to control the ordering of the addresses and easily predict what data will be in specific registers.

Every measured parameter has a corresponding status and measurement time that are updated with each measurement.

The maximum number of supported measurements from all modules in the system is 28.

The Modbus registers are assigned within 30 seconds after the 2100 module is powered up. To conserve power for the users who do not use Modbus communications, no Modbus registers will be updated with sensor readings until a Modbus master communicates with the 2100 module.

2150 Area Velocity Flow Module

Section 5 Maintenance

5.1 Maintenance Overview

This section explains the maintenance requirements of the 2150 Module and its sensor.

The 2100 Series system is designed to perform reliably in adverse conditions with a minimal amount of routine service requirements. To keep your system working properly, the following should be checked at regular intervals:

- Battery power (section 5.3)
- Desiccant (section 5.4)
- Channel conditions (section 5.5)

Maintenance intervals are affected by many variables. The number of modules powered by a Battery Module and the Data Storage Rate will affect the battery life. Humidity levels obviously affect the service life of the desiccant, and the amount of debris in the stream can drastically alter the channel conditions.

As a guide, a basic system installed in an environment with moderate humidity levels and an AV Sensor installed in a channel relatively free from debris and silt, the maintenance interval should not exceed three months. A basic system is defined as:

- a single AV Module and AV Sensor,
- powered by a fresh pair of alkaline lantern batteries,
- recording readings at the default intervals of 15 minutes.

Experience is often the best tool to use when establishing minimum maintenance intervals for your system. Until you have gained an understanding of the AV Module's operation under differing environmental conditions, a weekly maintenance interval is recommended.

5.2 Maintenance Kits

Teledyne Isco
Customer Service Dept.
P.O. Box 82531
Lincoln, NE 68501 USA

Phone: (800) 228-4373
(402) 464-0231
FAX: (402) 465-3022

E-mail:
IscoInfo@teledyne.com

Many of the parts called out in the *Installation* and *Maintenance* sections of this manual are available in maintenance kits. Kit number 60-2059-001, which supports the AV Module, contains O-rings for the connectors and desiccant cartridge, a hydrophobic filter, and a one-pound container of indicating silica gel desiccant. Kit number 60-2099-001, which supports the Battery Module, contains O-rings for the connectors, gaskets for the battery doors, humidity indicators, and bags of desiccant. You can order the kits by calling Teledyne Isco's Customer Service Department.

5.3 Batteries

Input voltage can be monitored while you are connected to the AV Module with Flowlink. The AV Module also can record Input Voltage readings to closely track the power consumption. Keep in mind that battery discharge rates vary widely depending on the configuration of your system and its operating environment. Batteries should be replaced according to the instructions in section 2.4.1.

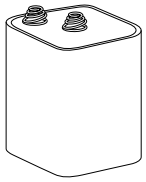

Lantern Battery

The batteries should be replaced with:

- new 6V alkaline lantern batteries (Isco P/N 340-2006-02), *or*
- fully-charged lead-acid batteries (Isco P/N 60-2004-041).

5.4 Desiccant

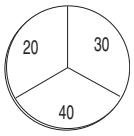

Battery Module
Humidity Indicator

The 2100 System devices use desiccant to protect the internal components from moisture damage. In the AV Module, a desiccant cartridge is used to dry the reference air for the sensor. This prevents moisture from plugging the reference line, which would cause the sensor to report erroneous level readings. The cartridge is filled with indicating silica gel that is yellow or blue when dry. As the desiccant becomes saturated, the color changes from blue to pink, or from yellow to green. Replace the desiccant before the entire length of the cartridge turns pink or green.

The Battery Module uses desiccant bags to keep the interior of the case dry. The bags are located inside the battery caps. Attached to the inside face of each cap is a humidity indicator. Humidity indicators have regions that display 20, 30, and 40 percent humidity levels. Ideally, each region should be completely blue. As the desiccant becomes saturated, the humidity levels will increase and the regions turn pink. When the 40 percent region begins to turn pink, the components are no longer adequately protected and the desiccant must be replaced.

5.4.1 Replacing the Desiccant: AV Module

The desiccant is contained in a cartridge located on the left side of the AV Module. To remove the cartridge, unscrew the collar and slide the cartridge out of the AV Module. The clear tube reveals the silica gel desiccant inside.

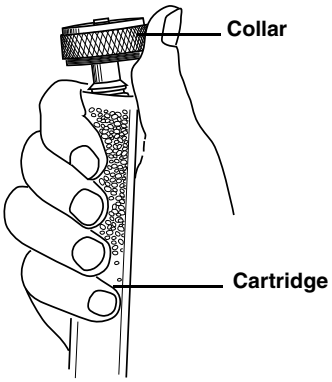

To replace the silica gel desiccant:

1. Hold the cartridge upright with the collar at the top.
2. As shown in the margin, push the collar off the cartridge.
3. Empty the saturated silica gel beads or granules.
4. Fill the tube with new (Isco P/N 099-0011-03) or reactivated (see section 5.4.3) silica gel desiccant.
5. Press the collar onto the tube.
6. Slide the cartridge into the AV Module. Tighten the collar to seal the cartridge in place.

5.4.2 Replacing the Desiccant: Battery Module

A bag of desiccant is located inside each of the battery caps behind a retaining plate. To replace the desiccant:

1. Loosen the two mounting screws that secure the metal retaining plate.
2. Rotate the retaining plate until it is free from the mounting screws.
3. Remove the spent desiccant bag from the cap and replace it with a new (Isco P/N 099-0002-33) or reactivated (see section 5.4.3) bag.
4. Replace the retaining plate and secure it with the screws.

5.4.3 Reactivating the Desiccant

Silica gel beads/granules and bags of desiccant can be reactivated.

⚠ CAUTION

Desiccant may produce irritating fumes when heated. Observe the following precautions:

- Use a vented oven in a well-ventilated room.
- Do not remain in the room while the regeneration is taking place.
- Use the recommended temperature. Avoid heating the desiccant at higher than recommended temperatures.

There have been reports of irritating fumes coming from the desiccant during reactivation. While our attempts to duplicate the problem have been unsuccessful, we still urge you to use caution. Material Safety Data Sheets are in the back of this manual.

The desiccant's ability to remove moisture may lessen with each saturation/reactivation cycle, resulting in a need for more frequent service. After several cycles, the desiccant may no longer be effective as it saturates too quickly. At this point, replace the desiccant.

Silica gel

To reactivate the silica gel desiccant, pour the spent desiccant into a heat resistant container. Never heat the cartridge assembly; it will melt. Heat the silica gel in a *vented convection oven* at 212° to 350°F (100° to 175°C) for two to three hours, or until the blue or yellow color returns. Allow the desiccant to cool and store it in an airtight container until ready for use.

Desiccant bags

Bagged desiccant will often include reactivation or recharging instructions on the bag's labeling. Always follow the instructions printed on the bag. If the instructions are not available, the bags may be heated in a *vented convection oven* at 245°F (120°C) for sixteen hours.

5.5 Channel Conditions

Because the sensor body offers a streamlined profile to the flow, solid materials rarely collect on the sensor. However, clear the channel upstream and downstream from the sensor periodically. This maintains the hydrostatic conditions on which the level-to-area conversion is based.

5.6 Other Maintenance

Other maintenance may be performed on the AV Module and sensor "as-needed." Sections 5.6.1 through 5.6.3 describe these activities.

5.6.1 Hydrophobic Filter

If the 2150 is in a humid location or submerged, a hydrophobic filter prevents water from entering the desiccant cartridge and reference line. Any amount of water will plug the filter and it must be rinsed with clean water and allowed to dry, or replaced so that the reference line can be reliably ventilated. *Drifting level readings are often an indication that the hydrophobic filter may be plugged*.

209-0093-93

Remove the hydrophobic filter with a 5/8" or 16mm socket. Gently screw in the replacement filter (Isco part #209-0093-93).

If the hydrophobic filter frequently requires replacement, consider relocating the modules so that they are better protected.

5.6.2 Cleaning

The AV Module case may be cleaned with mild detergent and warm water. Before cleaning the module, ensure that all protective connector caps are in place.

The cable and outer surfaces of the AV Sensor may also be cleaned with mild detergent and warm water.

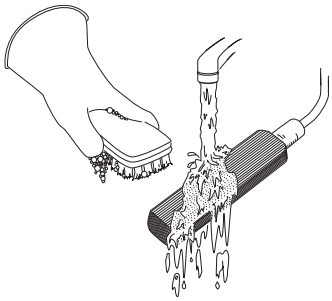

If the flow stream carries a great deal of debris, beware of organic materials that may collect beneath the AV Sensor. This material swells as it becomes saturated with water and may exert pressure on the outer diaphragm. This can damage the transducer and permanently disable the AV Sensor. Keeping the ports clean not only prevents damage, but assures you that the AV Sensor will respond to the hydrostatic pressure above instead of the pressure created by swollen material.

If the ports become blocked:

1. Remove the sensor from its mounting ring, plate, or carrier.
2. Scrape any accumulated solids off the exterior of the sensor. Use a brush and flowing water.
3. Remove debris that has accumulated in the ports.
4. The outer diaphragm is behind the small round cover on the bottom of the sensor. It should be visible through the two small openings at the center of the cover. Gently flush the cover and holes with water to remove debris.

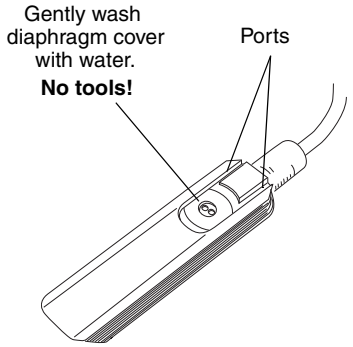

⚠ CAUTION

Avoid using tools near the cover openings. The transducer is extremely sensitive to pressure applied to its exposed surface. Direct or indirect contact with the outer diaphragm may permanently damage the AV Sensor.

5.6.3 Sensor Cable Inspection

Erroneous level or velocity readings may not always indicate a fault inside the AV Sensor body. A damaged cable can affect the operation of the sensor, particularly if the reference air tube inside the cable is collapsed or blocked. Damaged cables cannot be spliced or repaired.

If the AV Sensor cable is damaged, you must replace the entire assembly, as the sensor body and cable are a factory-sealed unit. Keep the connector clean and dry and install the cable so that it is not at risk of damage resulting from other activity taking place in the area. The connector can be replaced in some instances, depending on the condition of the cable.

In temporary installations, do not leave cables lying around where they may be stepped on or run over by heavy equipment. Do not leave extra cable loose in the flow stream where it can trap debris.

In permanent installations, cables repeatedly subjected to abuse will fail and should be installed in conduit for protection. The conduit must be large enough to pass the connector through, as you cannot remove or replace it.

5.7 How to Obtain Service

The internal components of the AV Module are not user-serviceable. The case is completely sealed to protect the internal components. To repair the unit, the case must be broken open and replaced. If you think your module requires repair, contact Teledyne Isco's Technical Service Department.

The pressure transducer, the ultrasonic transducers, cable connections, and the electronic components of the AV Sensor are encapsulated in plastic resin and are not user-serviceable. If any part of the AV Sensor fails, it must be replaced.

Corresponding with a Teledyne Isco Technical Service Representative can often resolve the problem without the need to return the item. If the difficulty cannot be resolved you will be issued a Return Authorization Number (RAN) and information on returning it to the factory.

Teledyne Isco
Technical Service Dept.
P.O. Box 82531
Lincoln, NE 68501 USA

Phone: (866) 298-6174
(402) 464-0231
FAX: (402) 465-3085

E-mail:
IscoService@teledyne.com

5.7.1 Diagnostics

As a troubleshooting aid, many module functions can generate a diagnostic file. With the assistance of a Teledyne Isco Technical Service Representative, the diagnostic files can often be used to isolate a problem.

To view a diagnostic file, connect to the site with Flowlink. View the measurement tab of the suspect function and click on the *Diagnostics...* button. The module then generates the file and sends it to Flowlink where it is displayed as a text report.

Flowlink can also collect all of the diagnostic files while retrieving data. The last available diagnostic files are always kept in Flowlink's database where they can be viewed "off-line" at a later time. To enable Flowlink to automatically collect all diagnostic files while retrieving the data, open the *Utilities>Options* from the menu and check the *Retrieve data gets text reports* box on the 2100 tab.

2150 Area Velocity Flow Module

Appendix A Replacement Parts

A.1 Replacement Parts Diagrams and Listings

Replacement parts are called out in illustrations in this section. Reference the call-outs in the accompanying tables to determine the part number for the item.

Replacement parts can be purchased by contacting Teledyne Isco's Customer Service Department.

Teledyne Isco
Customer Service Department
P.O. Box 82531
Lincoln, NE 68501 USA

Phone: (800) 228-4373
(402) 464-0231
FAX: (402) 465-3022

E-mail: IscoInfo@teledyne.com

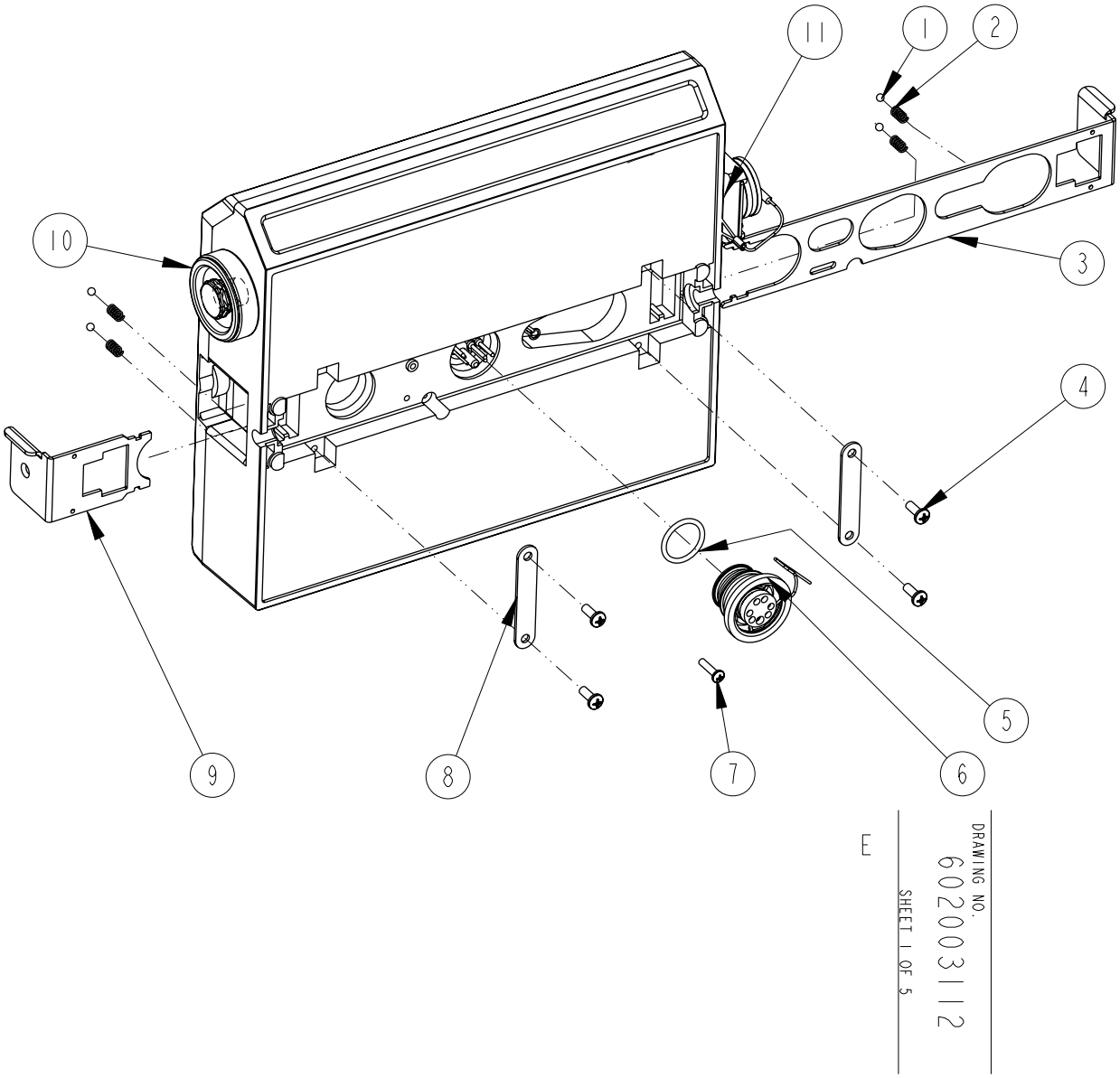
11
1
2
10
3
4
9
8
7
6
5
E
DRAWING NO.
602003112
SHEET 1 OF 5

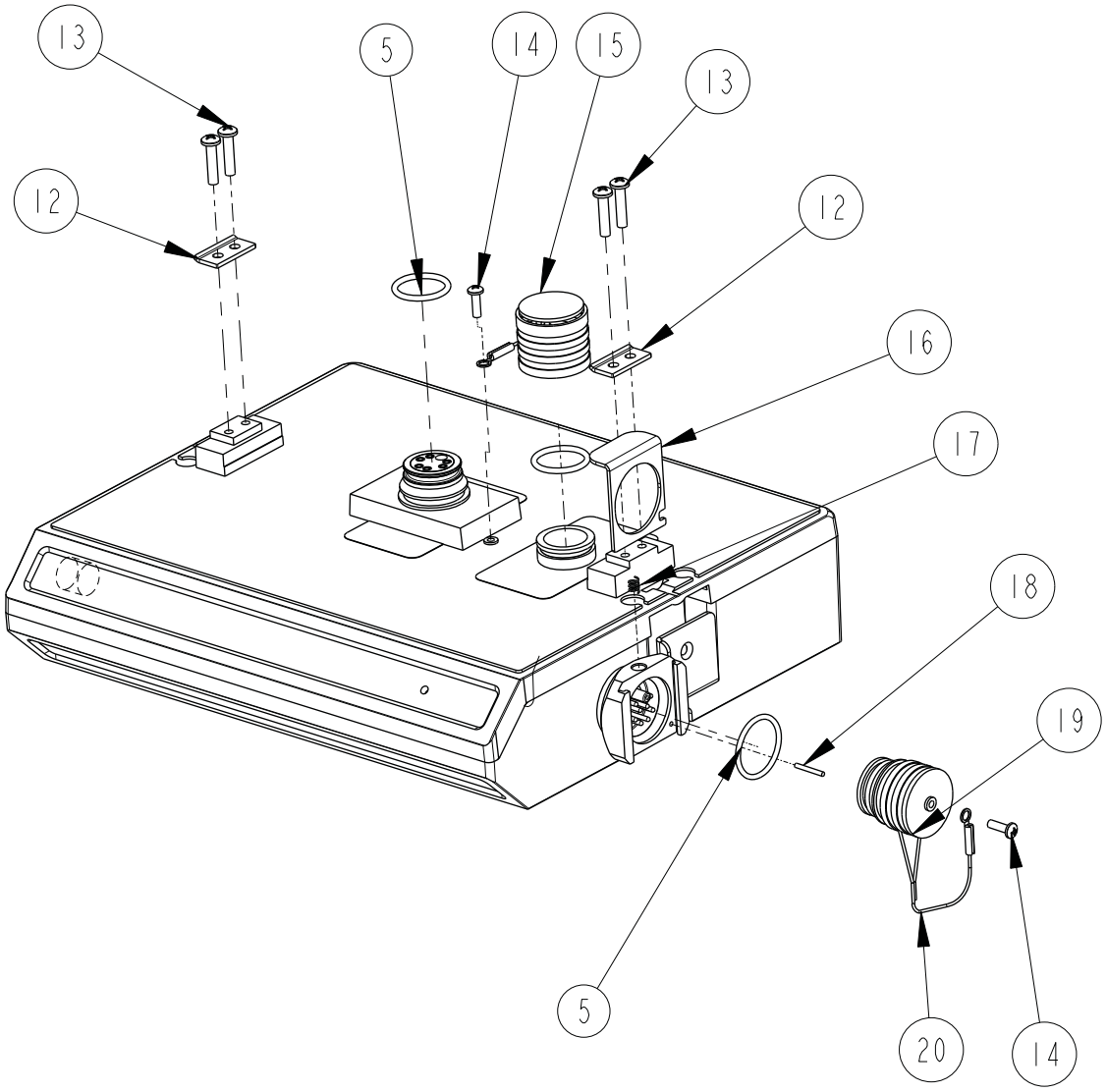
13
5
14
15
13
12
12
16
17
18
19
5
20
14

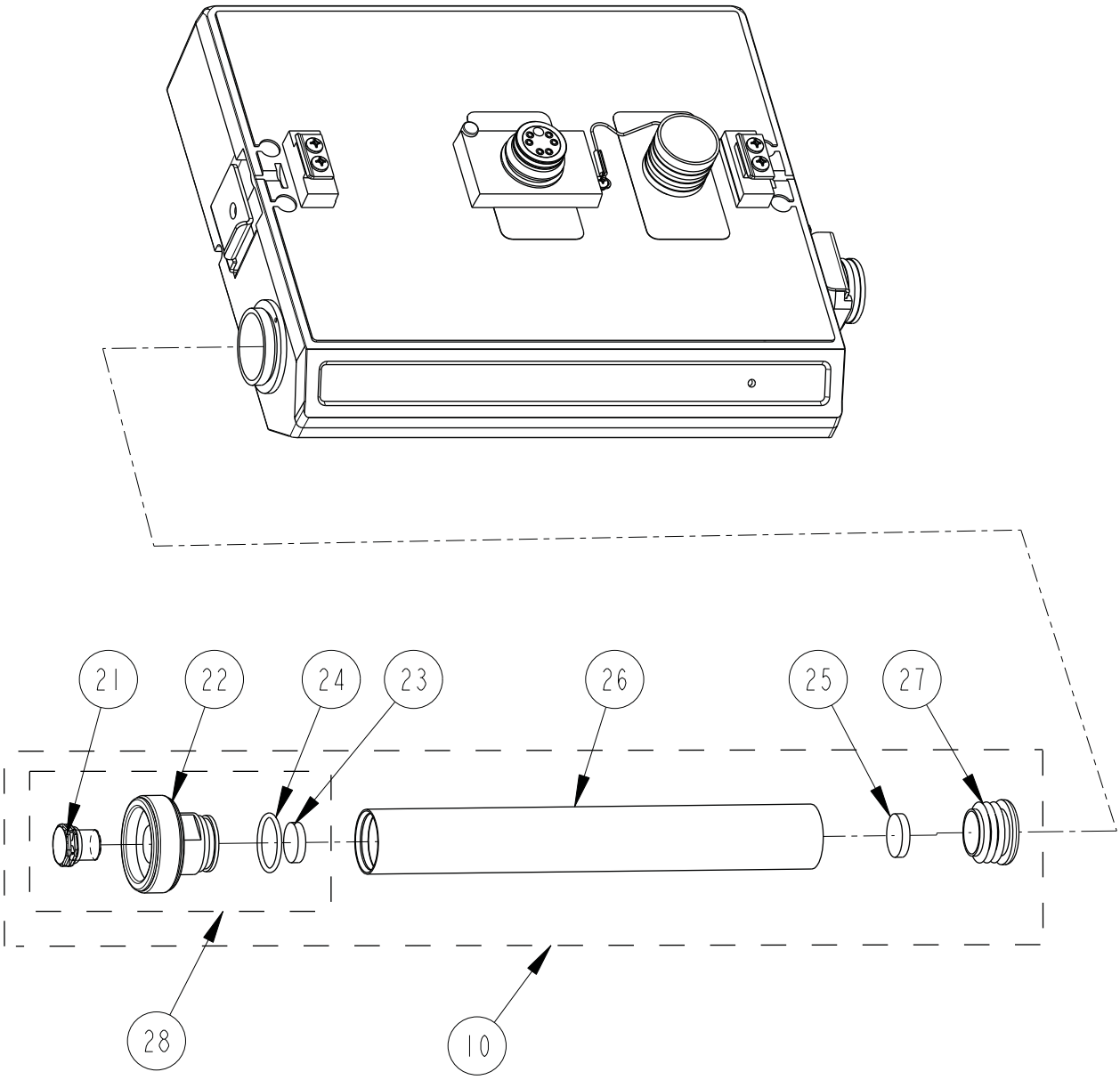
21
22
24
23
26
25
27
28
10

602003112

REPLACEMENT PARTS LIST

SHEET: 4 OF 5

TELEDYNE ISCO, INC.

REV: E | DATE: 022008

ITEM NO.	PART NUMBER	DESCRIPTION
1	201900102	BALL .125 DIAMETER 316 SST
2	203011602	COMPRESSION SPRING, .022 DIAMETER WIRE, .31 FREE LENGTH
3	692003190	LARGE LATCH
4	231311206	SCREW, SELF TAP #6 X 3/8, PAN HEAD, PHILLIPS, SST
5	202100669	O RING,.669 ID,.079 CROSS SECTION, BUNA-N RUBBER
6	602004013	PLUG ASSEMBLY FEMALE CONNECTOR (includes item 5)
7	231611108	SCREW, SELF TAP, #4 X 1/2, PAN HEAD PHILLIPS, SST
8	602003022	LATCH HOLD
9	692003189	SMALL LATCH
10	602004016	DESICCANT ASSEMBLY (includes items 21 thru 27)
11	602004033	PLUG ASSEMBLY, FEMALE PROBE (includes items 5, 14, 19, and 20)
12	602003019	NODE CLIP
13	231514920	SCREW, SELF TAP, 6-19 X 5/8 TORX, PAN HEAD, SST
14	231310140	SCREW, SELF TAP, #4 X 3/8, PAN HEAD PHILLIPS, SST
15	602004012	CAP ASSEMBLY, MALE CONNECTOR
16	602003018	CONNECTOR CLIP
17	203011105	COMPRESSION SPRING, .026 DIAMETER WIRE, .31 FREE LENGTH
18	236410408	PIN, SPRING, 1/16 X 1/2 LONG SST
19	602003076	PLUG, FEMALE PROBE
20	692003172	CABLE, FEMALE PROBE PLUG
21	209009393	SCREW IN FILTER
22	602004265	DESICCANT CAP ASSEMBLY
23	692203300	FRIT, .620 DIA.
24	202500017	O-RING, .676 ID, .070 CROSS SECTION, BUNA-N RUBBER
25	692203301	FRIT, .670 DIA.
26	602003046	DESICCANT TUBE

NOTE: 1. For current prices and quotations on parts, contact Isco Service Department.
2. This list is subject to change without notice.

602003112

REPLACEMENT PARTS LIST

SHEET: 5 OF 5

TELEDYNE ISCO, INC.

REV: E | DATE: 022008

ITEM NO.	PART NUMBER	DESCRIPTION
27	602003074	CAP PLUG MODIFICATION, DESICCANT
28	602004270	GORE DESICCANT CAP

NOTE: 1. For current prices and quotations on parts, contact Isco Service Department.
2. This list is subject to change without notice.

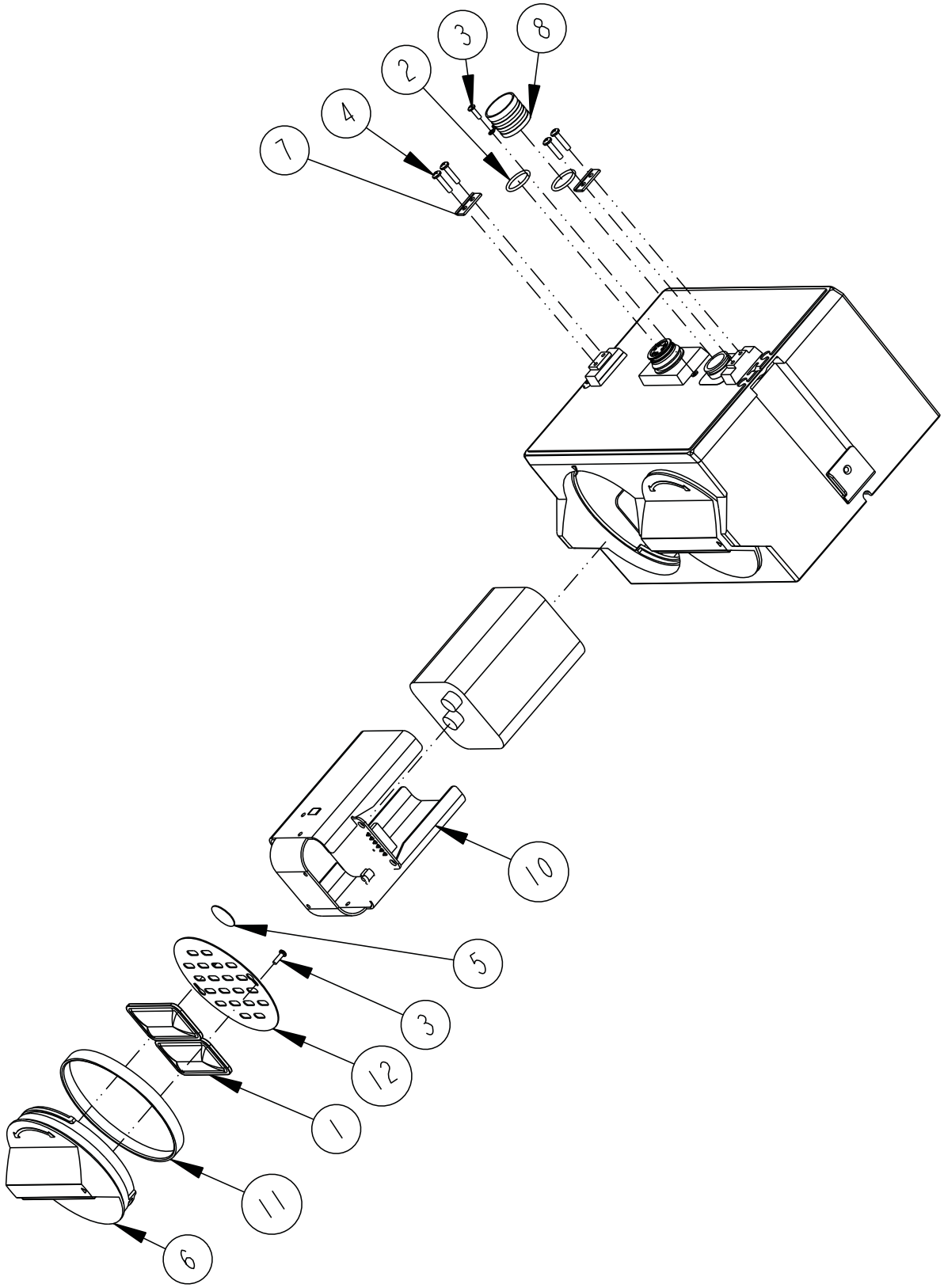
3
8
2
4
7
10
5
3
12
1
11
6

602003113

REPLACEMENT PARTS LIST

SHEET: 2 OF 2

TELEDYNE ISCO, INC.

REV: A | DATE: 06200

ITEM NO.	PART NUMBER	DESCRIPTION
1	099000201	DESICCANT BAG 16.5 GRAM
2	202100669	O RING, .669 ID, .079 CROSS SECTION, BUNA-N RUBBER
3	231310140	SCREW, SELF TAP, #4 X 3/8, PAN HEAD, PHILLIPS, SST
4	231514920	SCREW, SELF TAP 6-19 X 5/8, TORX, PAN HEAD, SST
5	490001300	HUMIDITY INDICATOR CARD
6	602003014	CAP BATTERY NODE
7	602003019	NODE CLIP
8	602004012	CAP ASSEMBLY, MALE CONNECTOR
9	602004017	BATTERY CAP ASSEMBLY (Includes 1, 3, 5, 6, 11, & 12)
10	602004030	BATTERY HOLDER ASSEMBLY
11	692003017	BATTERY CAP GASKET
12	692003067	BATTERY CAP PLATE
3	Refer to 2150/2110 module for a listing of parts associated with latch and lower communication port cap.	

NOTE: 1. For current prices and quotations on parts, contact Isco Service Department.
2. This list is subject to change without notice.

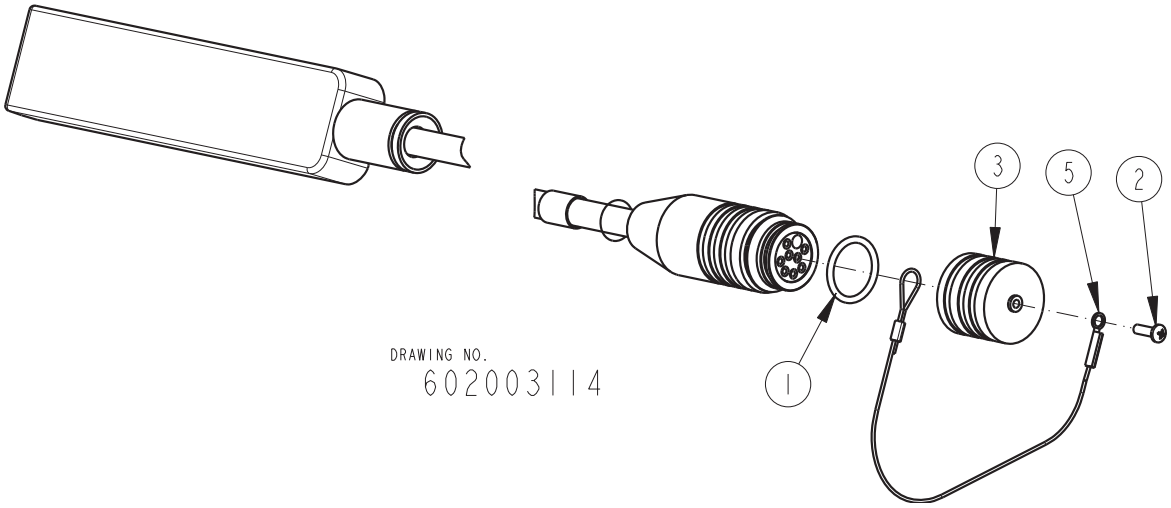
3
5
2
1
DRAWING NO.
602003114

602003114

REPLACEMENT PARTS LIST

SHEET: 2 OF 2

Isco, Inc.

REV: | DATE: 03294

ITEM NO.	PART NUMBER	DESCRIPTION
1	202100669	O RING, .669 ID, .079 CROSS SECTION, BUNA-N RUBBER
2	231310140	SCREW, SELF TAP, #4 X 3/8, PAN HEAD, PHILLIPS, SST
3	602003075	CAP, MALE PROBE
4	602004034	CAP ASSEMBLY, MALE PROBE (Includes items 2, 3, & 5)
5	692003174	CABLE, MALE PROBE CAP

NOTE: 1. For current prices and quotations on parts, contact Isco Service Department.
2. This list is subject to change without notice.

2150 Area Velocity Flow Module

Appendix B Accessories

B.1 How to Order

Accessories can be purchased by contacting Teledyne Isco's Customer Service Department.

Teledyne Isco
Customer Service Dept.
P.O. Box 82531
Lincoln, NE 68501 USA

Phone: (800) 228-4373
(402) 464-0231
FAX: (402) 465-3022

E-mail: IscoInfo@teledyne.com

B.2 General Accessories

2150 A/V Sensor	60-2004-135
Tubing, Reference Air Extension, 10 ft.	60-2003-104
Alkaline Lantern Battery	340-2006-02
Rechargeable 6V Lead-acid Lantern Battery	60-2004-041
Charging Adapter for 6V Lead-acid Lantern Battery	60-2004-040
Power adaptor cable for Isco batteries and power packs, 2 ft standard, CE-rated	69-2004-451
RS232 Communication Cable	60-2004-046
USB Communication Cable	60-2004-507
2100 Module to Module Extension Cable	60-2004-056
Sampler Interface Cable	60-2004-260
2108 Analog Output Module	68-2000-010
Flowlink for Windows Software	CALL
Spreader Bar *adjusts from 22.5 to 48 inches (57 to 122 cm)*	60-3004-110
Instruction Manual	60-2004-038
Isco Open Channel Flow Measurement Handbook	60-3003-041

B.3 Maintenance Kits

AV Module Maintenance Kit	60-2059-001
Battery Module Maintenance Kit	60-2099-001

B.4 AV Sensor Mounting Accessories

The 2150 Area Velocity Sensor can be installed using Isco's installation systems listed below. A Low Profile Carrier is optional when attaching the AV Sensor to any system listed below.

Low Profile Carrier *(attaches the 2150 AV sensor to a standard-size ring or plate)* 60-3204-029

Standard Spring Rings *(Each ring includes plastic ties to fasten the cable and a manual)*

- 6" Dia 68-3200-007
- 8" Dia 68-3200-008
- 10" Dia 68-3200-009
- 12" Dia 68-3200-010
- 15" Dia 68-3200-011

Standard Scissors Rings *(Each scissors ring includes a base section, scissors mechanism, extensions, plastic ties, and a manual)*

- 16-24" Pipe. 68-3000-042
- 26-38" Pipe. 68-3000-043
- 38-44" Pipe. 68-3000-044
- 44-48" Pipe. 68-3000-045
- 60" Pipe 68-3000-046
- 72" Pipe 68-3000-047
- 16-60" Pipe. 68-3000-048

Base Section *(with plastic ties and manual)* 60-3004-169

Street Level Installation System

- Multi-section Pole *(Includes manual. To complete your system, you must also order a Street Level Mounting Ring)* 60-3204-012
- Street Level Mounting Ring for 6" dia. pipe 60-3204-014
- Street Level Mounting Ring for 8" dia. pipe 60-3204-015
- Street Level Mounting Ring for 10" dia. pipe 60-3204-016
- Street Level Mounting Ring for 12" dia. pipe 60-3204-017
- Street Level Mounting Ring for 15" dia. pipe 60-3204-018

Sensor Mounting Plate *(With plastic ties & instructions)* . . 68-3000-051

2150 Area Velocity Flow Module

Appendix C Material Safety Data Sheets

C.1 Overview

This appendix to the manual provides Material Safety Data Sheets for the desiccant used by the 2150 Area Velocity Module and 2191 Battery Module.

Teledyne Isco cannot guarantee the accuracy of the data. Specific questions regarding the use and handling of the products should be directed to the manufacturer listed on the MSDS.

101 Christine Drive
Belen, New Mexico 87002
Phone: (505) 864-6691
Fax: (505) 861-2355

SÜD-CHEMIE
Performance Packaging

ISO 9002

MATERIAL SAFETY DATA SHEET -- September 28, 1998
SORB-IT®
Packaged Desiccant

SECTION I -- PRODUCT IDENTIFICATION

Trade Name and Synonyms:	Silica Gel, Synthetic Amorphous Silica, Silicon, Dioxide
Chemical Family:	Synthetic Amorphous Silica
Formula:	$SiO_2.x\ H_2O$

SECTION II -- HAZARDOUS INGREDIENTS

Components in the Solid Mixture

COMPONENT	CAS No	%	ACGIH/TLV (PPM)	OSHA-(PEL)
Amorphous Silica	63231-67-4	>99	PEL - 20 (RESPIRABLE), TLV – 5	LIMIT – NONE, HAZARD - IRRITANT ˝

Synthetic amorphous silica is not to be confused with crystalline silica such as quartz, cristobalite or tridymite or with diatomaceous earth or other naturally occurring forms of amorphous silica that frequently contain crystalline forms.

This product is in granular form and packed in bags for use as a desiccant. Therefore, no exposure to the product is anticipated under normal use of this product. Avoid inhaling desiccant dust.

SECTION III -- PHYSICAL DATA

Appearance and Odor:	White granules; odorless.
Melting Point:	>1600 Deg C; >2900 Deg F
Solubility in Water:	Insoluble.
Bulk Density:	>40 lbs./cu. ft.
Percent Volatile by Weight @ 1750 Deg F:	<10%.

101 Christine Drive
Belen, New Mexico 87002
Phone: (505) 864-6691
Fax: (505) 861-2355

SÜD-CHEMIE
Performance Packaging
ISO 9002

MATERIAL SAFETY DATA SHEET -- September 28, 1998
SORB-IT®
Packaged Desiccant

SECTION IV -- FIRE EXPLOSION DATA

Fire and Explosion Hazard - Negligible fire and explosion hazard when exposed to heat or flame by reaction with incompatible substances.

Flash Point - Nonflammable.

Firefighting Media - Dry chemical, water spray, or foam. For larger fires, use water spray fog or foam.

Firefighting - Nonflammable solids, liquids, or gases: Cool containers that are exposed to flames with water from the side until well after fire is out. For massive fire in enclosed area, use unmanned hose holder or monitor nozzles; if this is impossible, withdraw from area and let fire burn. Withdraw immediately in case of rising sound from venting safety device or any discoloration of the tank due to fire.

SECTION V -- HEALTH HAZARD DATA

Health hazards may arise from inhalation, ingestion, and/or contact with the skin and/or eyes. Ingestion may result in damage to throat and esophagus and/or gastrointestinal disorders. Inhalation may cause burning to the upper respiratory tract and/or temporary or permanent lung damage. Prolonged or repeated contact with the skin, in absence of proper hygiene, may cause dryness, irritation, and/or dermatitis. Contact with eye tissue may result in irritation, burns, or conjunctivitis.

First Aid (Inhalation) - Remove to fresh air immediately. If breathing has stopped, give artificial respiration. Keep affected person warm and at rest. Get medical attention immediately.

First Aid (Ingestion) - If large amounts have been ingested, give emetics to cause vomiting. Stomach siphon may be applied as well. Milk and fatty acids should be avoided. Get medical attention immediately.

First Aid (Eyes) - Wash eyes immediately and carefully for 30 minutes with running water.

101 Christine Drive
Belen, New Mexico 87002
Phone: (505) 864-6691
Fax: (505) 861-2355

SÜD-CHEMIE
Performance Packaging
ISO 9002

MATERIAL SAFETY DATA SHEET -- September 28, 1998
SORB-IT®
Packaged Desiccant

NOTE TO PHYSICIAN: This product is a desiccant and generates heat as it adsorbs water. The used product can contain material of hazardous nature. Identify that material and treat accordingly.

SECTION VI -- REACTIVITY DATA

Reactivity - Silica gel is stable under normal temperatures and pressures in sealed containers. Moisture can cause a rise in temperature which may result in a burn.

SECTION VII --SPILL OR LEAK PROCEDURES

Notify safety personnel of spills or leaks. Clean-up personnel need protection against inhalation of dusts or fumes. Eye protection is required. Vacuuming and/or wet methods of cleanup are preferred. Place in appropriate containers for disposal, keeping airborne particulates at a minimum.

SECTION VIII -- SPECIAL PROTECTION INFORMATION

Respiratory Protection - Provide a NIOSH/MSHA jointly approved respirator in the absence of proper environmental control. Contact your safety equipment supplier for proper mask type.

Ventilation - Provide general and/or local exhaust ventilation to keep exposures below the TLV. Ventilation used must be designed to prevent spots of dust accumulation or recycling of dusts.

Protective Clothing - Wear protective clothing, including long sleeves and gloves, to prevent repeated or prolonged skin contact.

Eye Protection - Chemical splash goggles designed in compliance with OSHA regulations are recommended. Consult your safety equipment supplier.

101 Christine Drive
Belen, New Mexico 87002
Phone: (505) 864-6691
Fax: (505) 861-2355

SÜD-CHEMIE
Performance Packaging

ISO 9002

MATERIAL SAFETY DATA SHEET -- September 28, 1998
SORB-IT®
Packaged Desiccant

SECTION IX -- SPECIAL PRECAUTIONS

Avoid breathing dust and prolonged contact with skin. Silica gel dust causes eye irritation and breathing dust may be harmful.

* No Information Available

HMIS (Hazardous Materials Identification System) for this product is as follows:

Health Hazard	0
Flammability	0
Reactivity	0
Personal Protection	HMIS assigns choice of personal protective equipment to the customer, as the raw material supplier is unfamiliar with the condition of use.

The information contained herein is based upon data considered true and accurate. However, United Desiccants makes no warranties expressed or implied, as to the accuracy or adequacy of the information contained herein or the results to be obtained from the use thereof. This information is offered solely for the user's consideration, investigation and verification. Since the use and conditions of use of this information and the material described herein are not within the control of United Desiccants, United Desiccants assumes no responsibility for injury to the user or third persons. The material described herein is sold only pursuant to United Desiccants' Terms and Conditions of Sale, including those limiting warranties and remedies contained therein. It is the responsibility of the user to determine whether any use of the data and information is in accordance with applicable federal, state or local laws and regulations.

2150 Area Velocity Flow Module

Appendix D Safety Information

D.1 Safety Considerations

In field installations of Teledyne Isco wastewater samplers and associated equipment, the safety of the personnel involved should be the foremost consideration. The following sections provide safety procedures for working in and around manholes and sewers. the first section offers general safety advice. The second section deals with the special problem of hazardous gases found in sewers.

The 2150 has not been approved for use in hazardous locations as defined by the National Electrical Code.

D.2 Practical Safety Precautions

The following procedures are those used by Black & Veatch, a respected consulting firm, and are published here by permission.

Field personnel must keep safety uppermost in their minds at all times. When working above ground, rules of common sense and safety prevail. However, when entering manholes, strict safety procedures must be observed. Failure to do so could jeopardize not only your own life, but also the lives of other crew members.

D.2.1 Hazards

There are many hazards connected with entering manholes. Some of the most common hazards are:

Adverse Atmosphere – The manhole may contain flammable or poisonous gases or the atmosphere may be deficient in oxygen. orced ventilation may be necessary.

Deteriorated Rungs – Manhole steps may be corroded and not strong enough to support a man. It may be difficult to inspect the rungs because of poor lighting.

Traffic – Whenever manholes are located in the traveled way, barricades and warning devices are essential to direct traffic away from an open manhole.

Falling Objects – Items placed near the manhole opening may fall and injure a worker in the manhole.

Sharp Edges – Sharp edges of items in or near a manhole may cause cuts or bruises.

Lifting Injuries – Unless proper tools are used to remove manhole covers, back injuries or injuries to hands or feet may result.

D.2.2 Planning

Advance planning should include arrangements for test equipment, tools, ventilating equipment, protective clothing, traffic warning devices, ladders, safety harness, and adequate

number of personnel. Hasty actions may result in serious injuries. Time spent in the manhole should be kept to a minimum.

D.2.3 Adverse Atmospheres

[Refer to Table D-1, Hazardous Gases, at the end of this appendix.] Before workers enter a manhole, tests should be made for explosive atmosphere, presence of hydrogen sulfide, and oxygen deficiency. Combustible or toxic vapors may be heavier than air, so the tests on the atmosphere must be run at least 3/4 of the way down the manhole.

Whenever adverse atmosphere is encountered, forced ventilation must be used to create safe conditions. After the ventilating equipment has been operated for a few minutes, the atmosphere in the manhole should be retested before anyone enters the manhole.

When explosive conditions are encountered, the ventilating blower should be placed upwind to prevent igniting any gas that is emerging from the opening. When a gasoline engine blower is used, it must be located so that exhaust fumes cannot enter the manhole.

If testing equipment is not available, the manhole should be assumed to contain an unsafe atmosphere and forced ventilation must be provided. It should never be assumed that a manhole is safe just because there is no odor or the manhole has been entered previously.

D.2.4 Entering Manholes

Since the top of the manhole is usually flush with the surrounding surface, there may not be anything for the person who is entering the manhole to grab on to steady himself. Persons who are entering manholes should not be permitted to carry anything in their hands as they enter the manhole, to ensure that their hands will be free to hold on or grab if they slip. A good method for entering a manhole is to sit on the surface facing the manhole steps or ladder, with the feet in the hole and the arms straddling the opening for support. As the body slides forward and downward, the feet can engage a rung, and the back can rest against the opposite side of the opening. If there is any doubt about the soundness of the manhole steps, a portable ladder should be used.

A person should never enter a manhole unless he is wearing personal safety equipment, including a safety harness and a hard hat. Two persons should be stationed at the surface continuously while anyone is working inside a manhole, to lift him out if he is overcome or injured. One man cannot lift an unconscious man out of a manhole. The persons stationed at the surface should also function as guards to keep people and vehicles away from the manhole opening. To avoid a serious injury, a person should not be lifted out of a manhole by his arm unless it is a dire emergency.

When more than one person must enter a manhole, the first person should reach the bottom and step off the ladder before the next one starts down. When two men climb at the same time, the upper one can cause the lower one to fall by slipping or stepping on his fingers.

D.2.5 Traffic Protection

In addition to traffic cones, markers, warning signs, and barricades, a vehicle or a heavy piece of equipment should be placed between the working area and oncoming traffic. Flashing warning signals should be used to alert drivers and pedestrians. Orange safety vests should be worn by personnel stationed at the surface when the manhole is located in a vehicular traffic area.

D.2.6 Falling Objects

All loose items should be kept away from the manhole opening. This applies to hand tools as well as stones, gravel and other objects.

D.2.7 Removing the Covers

Manhole covers should be removed with a properly designed hook. Use of a pick ax, screwdriver, or small pry bar may result in injury. A suitable tool can be made from 3/4-inch round or hex stock. Two inches of one end should be bent at a right angle and the other end should be formed into a D-handle wide enough to accommodate both hands. Even with this tool, care must be exercised to prevent the cover from being dropped on the toes. The 2-inch projection should be inserted into one of the holes in the cover, the handle grasped with both hands, and the cover lifted by straightening the legs which have been slightly bent at the knees.

D.2.8 Other Precautions

Other precautions which should be taken when entering a manhole are:

- Wear a hard hat.
- Wear coveralls or removable outer garment that can be readily removed when the work is completed.
- Wear boots or nonsparking safety shoes.
- Wear rubberized or waterproof gloves.
- Wear a safety harness with a stout rope attached.
- Do not smoke.
- Avoid touching yourself above the collar until you have cleaned your hands.

D.2.9 Emergencies

Every member of the crew should be instructed on procedures to be followed in cases of an emergency. It is the duty of each crew chief to have a list of emergency phone numbers, including the nearest hospital and ambulance service, police precinct, fire station, and rescue or general emergency number.

D.2.10 Field Equipment

The following equipment will be available for use:

Blowers	Gloves	Traffic cones
Breathing apparatus	Hard Hats	Coveralls
Harnesses	First aid kits	Manhole irons
Emergency flashers	Pick axes	Flashlights
Rain slickers	Mirrors	Ropes

Gas detectors Safety vests Gas masks
Waders”

D.3 Lethal Atmospheres in Sewers

The following is an article written by Dr. Richard D. Pomeroy, and published in the October 1980 issue of ***Deeds & Data*** of the WPCF. Dr. Pomeroy is particularly well known for his studies, over a period of nearly 50 years, in the field of the control of hydrogen sulfide and other odors in sewers and treatment plants. He has personally worked in a great many functioning sewers. In the earlier years he did so, he admits, with little knowledge of the grave hazards to which he exposed himself.

It is gratifying that the subject of hazards to people working in sewers is receiving much more attention than in past years, and good safety procedures are prescribed in various publications on this subject. It is essential that people know and use correct procedures.

It is less important to know just what the hazardous components of sewer atmospheres are, as safety precautions should in general be broadly applicable, but there should be a reasonable understanding of this subject. It is disturbing to see statements in print that do not reflect true conditions.

One of the most common errors is the assumption that people have died from a lack of oxygen. The human body is able to function very well with substantially reduced oxygen concentrations. No one worries about going to Santa Fe, New Mexico, (elev. 2,100 meters), where the partial pressure of oxygen is equal to 16.2% (a normal atmosphere is about 21%) oxygen. When first going there, a person may experience a little ‘shortness of breath’ following exercise. People in good health are not afraid to drive over the high passes in the Rocky Mountains. At Loveland Pass, oxygen pressure is 13.2% of a normal atmosphere. At the top of Mt. Whitney, oxygen is equal to 12.2%t. Many hikers go there, and to higher peaks as well. After adequate acclimation, they may climb to the top of Mt. Everest, where oxygen is equal to only 6.7%.

The lowest oxygen concentrations that I have observed in a sewer atmosphere was 13 percent. It was in a sealed chamber, near sea level, upstream from an inverted siphon on a metropolitan trunk. A man would be foolish to enter the chamber. Without ventilation, he might die, but not from lack of oxygen.

It seems unlikely that anyone has ever died in a sewer from suffocation, that is, a lack of oxygen. Deaths have often been attributed to ‘asphyxiation.’ This is a word which, according to the dictionary, is used to mean death from an atmosphere that does not support life. The word has sometimes been misinterpreted as meaning suffocation, which is only one kind of asphyxiation.

In nearly all cases of death in sewers, the real killer is hydrogen sulfide. It is important that this fact be recognized. Many cities diligently test for explosive gases, which is very important, and they may measure the oxygen concentration which usually is

unimportant, but they rarely measure H_2S. Death has occurred where it is unlikely that there was any measurable reduction in the oxygen concentration. Waste water containing 2 mg per liter of dissolved sulfide, and at a pH of 7.0, can produce, in a chamber with high turbulence, a concentration of 300 PPM H_2S, in the air. This is considered to be a lethal concentration. Many people have died from H_2S, not only in sewers and industries, but also from swamps and from hot springs. In one resort area, at least five persons died from H_2S poisoning before the people were ready to admit that H_2S is not a therapeutic agent. Hardly a year passes in the U.S. without a sewer fatality from H_2S as well as deaths elsewhere in the world.

The presence of H_2S in a sewer atmosphere is easily determined. A bellows-and-ampoule type of tester is very satisfactory for the purpose, even though it is only crudely quantitative. When using a tester of this type, do not bring the air to the ampoule by way of a tube, as this may change the H_2S concentration. Hang the ampoule in the air to be tested, with a suction tube to the bulb or bellows.

Lead acetate paper is very useful as a qualitative indicator. It cannot be used to estimate the amount of sulfide, but it will quickly turn black in an atmosphere containing only a tenth of a lethal concentration.

Electrodes or other similar electrical indicating devices for H_2S in air have been marketed. Some of them are known to be unreliable, and we know of none that have proved dependable. Do not use one unless you check it at frequent intervals against air containing known H_2S concentrations. A supposed safety device that is unreliable is worse than none at all.

Remember that the nose fails, too, when it comes to sensing dangerous concentrations of H_2S.

Various other toxic gases have been mentioned in some publications. It is unlikely that any person has been asphyxiated in a sewer by any of those other gases, except possibly chlorine. The vapor of gasoline and other hydrocarbons is sometimes present in amounts that could cause discomfort and illness, but under that condition, the explosion hazard would be far more serious. The explosimeter tests, as well as the sense of smell, would warn of the danger. Pipelines in chemical plants might contain any number of harmful vapors. They, too, are sensed by smell and explosimeter tests if they get into the public sewer. Such occurrences are rare.

The attempt to instill a sense of urgency about real hazards is diluted if a man is told to give attention to a long list of things that in fact are irrelevant.

Be very careful to avoid high H_2S concentrations, flammable atmospheres, and hazards of physical injuries. Remember that much H_2S may be released by the stirring up of sludge in the bottom of a structure. Obey your senses in respect to irritating gases, such as chlorine (unconsciousness comes suddenly from breathing too much). Be cautious about strange odors. Do not

determine percent oxygen in the air. There is a danger that the result will influence a man's thinking about the seriousness of the real hazards. Most important, use ample ventilation, and do not enter a potentially hazardous structure except in a good safety harness with two men at the top who can lift you out."

D.4 Hazardous Gases

The following table contains information on the properties of hazardous gases.

Table D-1 Hazardous Gases

Gas	Chemical Formula	Common Properties	Specific Gravity or Vapor Density Air =1	Physiological Effect	Max Safe 60 Min. Exposure ppm	Max. Safe 8 Hour Exposure ppm	Explosive Range (% by vol. in air) Limits lower/upper	Likely Location of Highest Concentration	Most Common Sources	Simplest and Cheapest Safe Method of Testing
Ammonia	NH_3	Irritant and poisonous. Colorless with characteristic odor.	0.60	Causes throat and eye irritation at 0.05%, coughing at 0.17%. Short exposure at 0.5% to 1% fatal.	300 to 500	85	16 25	Near top. Concentrates in closed upper spaces	Sewers, chemical feed rooms.	Detectable odor at low concentrations
Benzene	C_6H_6	Irritant, colorless anesthetic	2.77	Slight symptoms after several hours exposure at 0.16% to 0.32%. 2% rapidly fatal.	3,000 to 5,000	25	1.3 7.1	At bottom.	Industrial wastes, varnish, solvents.	Combustible gas indicator
Carbon Bisulfide	CS_2	Nearly odorless when pure, colorless, anesthetic. Poisonous.	2.64	Very poisonous, irritating, vomiting, convulsions, psychic disturbance.	—	15	1.3 44.0	At bottom	An insecticide	Combustible gas indicator
Carbon Dioxide	CO_2	Asphyxiant, Colorless, odorless. When breathed in large quantities, may cause acid taste. Non-flammable. Not generally present in dangerous amounts unless an oxygen deficiency exists.	1.53	Cannot be endured at 10% more than a few minutes, even if subject is at rest and oxygen content is normal. Acts on respiratory nerves.	40,000 to 60,000	5,000	— —	At bottom; when heated may stratify at points above bottom.	Products of combustion, sewer gas, sludge. Also issues from carbonaceous strata.	Oxygen deficiency indicator
Carbon Monoxide	CO	Chemical asphyxiant. Colorless, odorless, tasteless. Flammable. Poisonous.	0.97	Combines with hemoglobin of blood. Unconsciousness in 30 min. at 0.2% to 0.25%. Fatal in 4 hours at 0.1%. Headache in few hours at 0.02%.	400	50	12.5 74.0	Near top, especially if present with illuminating gas.	Manufactured gas, flue gas, products of combustion, motor exhausts. Fires of almost any kind.	CO ampoules.
Carbon Tetra-Chloride	CCl_4	Heavy, ethereal odor.	5.3	Intestinal upset, loss of consciousness, possible renal damage, respiratory failure.	1,000 to 1,500	100	— —	At bottom.	Industrial wastes, solvent, cleaning	Detectable odor at low concentrations.

Table D-1 Hazardous Gases (Continued)

Gas	Chemical Formula	Common Properties	Specific Gravity or Vapor Density Air =1	Physiological Effect	Max Safe 60 Min. Exposure ppm	Max. Safe 8 Hour Exposure ppm	Explosive Range (% by vol. in air) Limits lower/upper	Likely Location of Highest Concentration	Most Common Sources	Simplest and Cheapest Safe Method of Testing
Chlorine	Cl_2	Irritant. Yellow-green color. Choking odor detectable in very low concentrations. Non-flammable.	2.49	Irritates respiratory tract. Kills most animals in a very short time at 0.1%.	4	1	— —	At bottom.	Chlorine cylinder and feed line leaks.	Detectable odor at low concentrations.
Formaldehyde	CH_2O	Colorless, pungent suffocating odor.	1.07	Irritating to the nose.	—	10	7.0 73.0	Near bottom.	Incomplete combustion of organics. Common air pollutant, fungicide.	Detectable odor.
Gasoline	C_5H_{12} to C_9H_{20}	Volatile solvent. Colorless. Odor noticeable at 0.03%. Flammable.	3.0 to 4.0	Anesthetic effects when inhaled. Rapidly fatal at 2.4%. Dangerous for short exposure at 1.1 to 2.2%.	4,000 to 7,000	1,000	1.3 6.0	At bottom.	Service stations, garages, storage tanks, houses.	1. Combustible gas indicator. 2. Oxygen deficiency indicator.**
Hydrogen	H_2	Simple asphyxiant. Colorless, odorless, tasteless. Flammable	0.07	Acts mechanically to deprive tissues of oxygen. Does not support life.	—	—	4.0 74.0	At top.	Manufactured gas, sludge digestion tank gas, electrolysis of water. Rarely from rock strata.	Combustible gas indicator.
Hydrogen Cyanide	HCN	Faint odor of bitter almonds. Colorless gas	0.93	Slight symptoms appear upon exposure to 0.002% to 0.004%. 0.3% rapidly fatal.	—	10	6.0 40.0	Near top.	Insecticide and rodenticide.	Detector tube
Gas	Chemical Formula	Common Properties	Specific Gravity or Vapor Density Air = 1	Physiological Effect*	Max Safe 60 Min. Exposure ppm	Max. Safe 8 Hour Exposure ppm	Explosive Range (% by vol. in air.) Limits lower/upper	Likely Location of Highest Concentration	Most Common Sources	Simplest and Cheapest Safe Method of Testing
Hydrogen Sulfide	H_2S	Irritant and poisonous volatile compound. Rotten egg odor in small concentrations. Exposure for 2 to 15 min. at 0.01% impairs sense of smell. Odor not evident at high concentrations. Colorless. Flammable.	1.19	Impairs sense of smell, rapidly as concentration increases. Death in few minutes at 0.2%. Exposure to 0.07 to 0.1% rapidly causes acute poisoning. Paralyzes respiratory center.	200 to 300	20	4.3 45.0	Near bottom, but may be above bottom if air is heated and highly humid.	Coal gas, petroleum, sewer gas. Fumes from blasting under some conditions. Sludge gas.	1. H_2S Ampoule. 2. 5% by weight lead acetate solution.
Methane	CH_4	Simple asphyxiant. Colorless, odorless, tasteless, flammable.	0.55	Acts mechanically to deprive tissues of oxygen. Does not support life.	Probably no limit, provided oxygen percent-age is sufficient for life.	—	5.0 15.0	At top, increasing to certain depth.	Natural gas, sludge gas, manufactured gas, sewer gas. Strata of sedimentary origin. In swamps or marshes.	1. Combustible gas indicator 2. Oxygen deficiency indicator.

Table D-1 Hazardous Gases (Continued)

Gas	Chemical Formula	Common Properties	Specific Gravity or Vapor Density Air =1	Physiological Effect	Max Safe 60 Min. Exposure ppm	Max. Safe 8 Hour Exposure ppm	Explosive Range (% by vol. in air) Limits lower/upper	Likely Location of Highest Concentration	Most Common Sources	Simplest and Cheapest Safe Method of Testing
Nitrogen	N_2	Simple asphyxiant. Colorless, tasteless. Non-flammable. Principal constituent of air. (about 79%).	0.97	Physiologically inert.	—	—	— —	Near top, but may be found near bottom.	Sewer gas. sludge gas. Also issues from some rock strata.	Oxygen deficiency indicator.
Nitrogen Oxides	NO N_2O NO_2	Colorless Colorless, sweet odor. Reddish-brown. Irritating odor. Deadly poison	1.04 1.53 1.58	60 to 150 ppm cause irritation and coughing. Asphyxiant. 100 ppm dangerous. 200 ppm fatal.	50	10	— —	Near bottom.	Industrial wastes. Common air pollutant.	NO_2 detector tube.
Oxygen	O_2	Colorless, odorless, tasteless. Supports combustion.	1.11	Normal air contains 20.8% of O_2. Man can tolerate down to 12%. Minimum safe 8 hour exposure, 14 to 16%. Below 10%, dangerous to life. Below 5 to 7% probably fatal.	—	—	— —	Variable at different levels.	Oxygen depletion from poor ventilation and absorption, or chemical consumption of oxygen.	Oxygen deficiency indicator.
Ozone	O_3	Irritant and poisonous. Strong electrical odor. Strong oxidizer. Colorless. At 1 ppm, strong sulfur-like odor.	1.66	Max. naturally occurring level is 0.04 ppm. 0.05 ppm causes irritation of eyes and nose. 1 to 10 ppm causes headache, nausea; can cause coma. Symptoms similar to radiation damage.	0.08	0.04	— —	Near bottom.	Where ozone is used for disinfection.	Detectable odor at 0.015 ppm.
Sludge Gas	—***	Mostly a simple asphyxiant. May be practically odorless, tasteless.	Variable	Will not support life.	No data. Would vary widely with composition.		5.3 19.3	Near top of structure.	From digestion of sludge.	See components.
Sulfur Dioxide	SO_2	Colorless, pungent odor. Suffocating, corrosive, poisonous, non-flammable.	2.26	Inflammation of the eyes. 400 to 500 ppm immediately fatal.	50 to 100	10	— —	At bottom, can combine with water to form sulfurous acid.	Industrial waste, combustion, common air pollutant.	Detectable taste and odor at low concentration.
Toluene	C_5H_{12} to C_9H_{20}	Colorless, benzene-like odor.	3.14	At 200-500 ppm, headache, nausea, bad taste, lassitude.	200	100	1.27 7.0	At bottom.	Solvent.	Combustible gas indicator.
Turpentine	$C_{10}H_{16}$	Colorless, Characteristic odor.	4.84	Eye irritation. Headache, dizziness, nausea, irritation of the kidneys.	—	100		At bottom.	Solvent, used in paint.	1. Detectable odor at low concentrations. 2.Combustible gas indicator.
Xylene	C_8H_{10}	Colorless, flammable	3.66	Narcotic in high concentrations. less toxic than benzene.	—	100	1.1 7.0	At bottom.	Solvent	Combustible gas indicator.

Table D-1 Hazardous Gases (Continued)

Gas	Chemical Formula	Common Properties	Specific Gravity or Vapor Density Air =1	Physiological Effect	Max Safe 60 Min. Exposure ppm	Max. Safe 8 Hour Exposure ppm	Explosive Range (% by vol. in air) Limits lower/upper	Likely Location of Highest Concentration	Most Common Sources	Simplest and Cheapest Safe Method of Testing

* Percentages shown represent volume of gas in air.

** For concentration over 0.3%.

***Mostly methane and carbon dioxide with small amounts of hydrogen, nitrogen, hydrogen sulfide, and oxygen; occasionally traces of carbon monoxide.

产品中有毒有害物质或元素的名称及含量

Name and amount of Hazardous Substances or Elements in the product

部件名称 Component Name	有毒有害物质或元素 Hazardous Substances or Elements					
	铅 (Pb)	汞 (Hg)	镉 (Cd)	六价铬 (Cr(VI))	多溴联苯 (PBB)	多溴二联苯 (PBDE)
线路板 Circuit Boards	X	O	O	O	O	O

产品中有毒有害物质或元素的名称及含量：Name and amount of Hazardous Substances or Elements in the product

O: 表示该有毒有害物质在该部件所有均质材料中的含量均在ST/ 标准规定的限量要求以下。

O: Represent the concentration of the hazardous substance in this component's any homogeneous pieces is lower than the ST/ standard limitation.

X：表示该有毒有害物质至少在该部件的某一均质材料中的含量超出ST/ 标准规定的限量要求。

(企业可在此处，根据实际情况对上表中打"X" 的技术原因进行进一步说明。)

X: Represent the concentration of the hazardous substance in this component's at least one homogeneous piece is higher than the ST/ standard limitation.

(Manufacturer may give technical reasons to the "X"marks)

环保使用期由经验确定。

The Environmentally Friendly Use Period (EFUP) was determined through experience.

生产日期被编码在系列号码中。前三位数字为生产年(207 代表 2007 年) 。随后的一个字母代表月份：A 为一月，B 为二月，等等。

The date of Manufacture is in code within the serial number. The first three numbers are the year of manufacture (207 is year 2007) followed by a letter for the month. "A" is January, "B" is February and so on.

产品中有毒有害物质或元素的名称及含量

Name and amount of Hazardous Substances or Elements in the product

部件名称 Component Name	有毒有害物质或元素 Hazardous Substances or Elements					
	铅 (Pb)	汞 (Hg)	镉 (Cd)	六价铬 (Cr(VI))	多溴联苯 (PBB)	多溴二联苯 (PBDE)
线路板 Circuit Boards	X	O	O	O	O	O
外部电缆 External Cables	O	O	O	O	X	O

产品中有毒有害物质或元素的名称及含量：Name and amount of Hazardous Substances or Elements in the product

O: 表示该有毒有害物质在该部件所有均质材料中的含量均在ST/ 标准规定的限量要求以下。

O: Represent the concentration of the hazardous substance in this component's any homogeneous pieces is lower than the ST/ standard limitation.

X：表示该有毒有害物质至少在该部件的某一均质材料中的含量超出ST/ 标准规定的限量要求。

(企业可在此处，根据实际情况对上表中打"X" 的技术原因进行进一步说明。)

X: Represent the concentration of the hazardous substance in this component's at least one homogeneous piece is higher than the ST/ standard limitation.

(Manufacturer may give technical reasons to the "X"marks)

环保使用期由经验确定。

The Environmentally Friendly Use Period (EFUP) was determined through experience.

生产日期被编码在系列号码中。前三位数字为生产年(207 代表 2007 年) 。随后的一个字母代表月份：A 为一月，B 为二月，等等。

The date of Manufacture is in code within the serial number. The first three numbers are the year of manufacture (207 is year 2007) followed by a letter for the month. "A" is January, "B" is February and so on.

DECLARATION OF CONFORMITY

ISM1-A

Application of Council Directive:	2014/30/EU – The EMC Directive 2014/35/EU – The Low Voltage Directive
Manufacturer's Name:	Teledyne Isco, Inc.
Manufacturer's Address:	4700 Superior, Lincoln, Nebraska 68504 USA Mailing Address: P.O. Box 82531, Lincoln, NE 68501
Equipment Type/Environment:	Laboratory Equipment for Light Industrial/Commercial Environments
Trade Name/Model No:	2150 Area Velocity Flow Module and Sensor
Year of Issue:	2016
Standards to which Conformity is Declared:	EN 61326-1:2013 EMC Requirements for Electrical Equipment for Measurement, Control, and Laboratory Use EN 61010-1:2010 Safety Requirements for Electrical Equipment for Measurement, Control, and Laboratory Use

Standard	Description	Severity Applied	Performance Criteria
EN61000-4-2	Electrostatic Discharge	Level 2 - 4kV contact discharge Level 3 - 8kV air discharge	B B
EN61000-4-3	Radiated RF Immunity	80 MHz to 1000MHz 80% AM at 1kHz Level 1 – 10V/m	*B
EN61000-4-4	Electrical Fast Transient	Level 1 – 1kV on I/O lines	B
EN61000-4-5	Surge on I/O Lines	1kV common mode, 0.5KV differential mode	B
EN61000-4-6	Conducted RF on I/O lines	150 kHz to 80 MHz, 3V rms, 80% modulated	B
CISPR11/ EN 55011	RF Emissions	Group 1, Class A Industrial, Scientific, and Medical Equipment	PASS

* Standard requires performance criteria A, however, tests show some degradation of performance due to RF at 10V/m, in that flow rates are affected beyond the tolerances published in the instrument's specifications.

We, the undersigned, hereby declare that the design of the equipment specified above conforms to the above Directive(s) and Standards as of September 13, 2016.

Edward J. Carter
USA Representative

TELEDYNE ISCO
A Teledyne Technologies Company

Edward J. Carter
Director of Engineering
Teledyne Isco, Inc.
4700 Superior Street
Lincoln, Nebraska 68504

Phone: (402) 464-0231
Fax: (402) 464-3799

60-2002-155
Rev B

DECLARATION OF CONFORMITY

ISM1-A

Application of Council Directive:	89/336/EEC – The EMC Directive 73/23/EEC – The Low Voltage Directive
Manufacturer's Name:	Teledyne Isco, Inc.
Manufacturer's Address:	4700 Superior, Lincoln, Nebraska 68504 USA Mailing Address: P.O. Box 82531, Lincoln, NE 68501
Equipment Type/Environment:	Laboratory Equipment for Light Industrial/Commercial Environments
Trade Name/Model No:	2191 Battery Module
Year of Issue:	2001
Standards to which Conformity is Declared:	EN 61326-1998 EMC Requirements for Electrical Equipment for Measurement, Control, and Laboratory Use EN 61010-1 Safety Requirements for Electrical Equipment for Measurement, Control and Laboratory use.

Standard	Description	Severity Applied	Performance Criteria
EN61000-4-2	Electrostatic Discharge	Level 2 - 4kV contact discharge Level 3 - 8kV air discharge	B B
EN61000-4-3	Radiated RF Immunity	80 MHz to 1000MHz 80% AM at 1kHz Level 1 – 10V/m	B
EN61000-4-4	Electrical Fast Transient	Level 1 – 1kV on I/O lines	B
EN61000-4-5	Surge on I/O Lines	1kV common mode, 0.5KV differential mode	B
EN61000-4-6	Conducted RF on I/O lines	150 kHz to 80 MHz, 3V rms, 80% modulated	B
CISPR11/ EN 55011	RF Emissions	Group 1, Class A Industrial, Scientific, and Medical Equipment	

We, the undersigned, hereby declare that the design of the equipment specified above conforms to the above Directive(s) and Standards as of July 1, 2001.

William Foster
USA Representative

TELEDYNE ISCO
A Teledyne Technologies Company

William Foster
Director of Engineering
Teledyne Isco, Inc.
4700 Superior Street
Lincoln, Nebraska 68504

Phone: (402) 464-0231
Fax: (402) 464-4543

60-2002-158
Rev A

Teledyne Isco One Year Limited Factory Service Warranty*

This warranty exclusively covers Teledyne Isco instruments, providing a one-year limited warranty covering parts and labor.

Any instrument that fails during the warranty period due to faulty parts or workmanship will be repaired at the factory at no charge to the customer. Teledyne Isco's exclusive liability is limited to repair or replacement of defective instruments. Teledyne Isco is not liable for consequential damages.

Teledyne Isco will pay surface transportation charges both ways within the 48 contiguous United States if the instrument proves to be defective within 30 days of shipment. Throughout the remainder of the warranty period, the customer will pay to return the instrument to Teledyne Isco, and Teledyne Isco will pay surface transportation to return the repaired instrument to the customer. Teledyne Isco will not pay air freight or customer's packing and crating charges. This warranty does not cover loss, damage, or defects resulting from transportation between the customer's facility and the repair facility.

The warranty for any instrument is the one in effect on date of shipment. The warranty period begins on the shipping date, unless Teledyne Isco agrees in writing to a different date.

Excluded from this warranty are normal wear; expendable items such as charts, ribbon, lamps, tubing, and glassware; fittings and wetted parts of valves; and damage due to corrosion, misuse, accident, or lack of proper maintenance. This warranty does not cover products not sold under the Teledyne Isco trademark or for which any other warranty is specifically stated.

No item may be returned for warranty service without a return authorization number issued by Teledyne Isco.

This warranty is expressly in lieu of all other warranties and obligations and Teledyne Isco specifically disclaims any warranty of merchantability or fitness for a particular purpose.

The warrantor is Teledyne Isco, 4700 Superior, Lincoln, NE 68504, U.S.A.

*** This warranty applies to the USA and countries where Teledyne Isco does not have an authorized dealer. Customers in countries outside the USA, where Teledyne Isco has an authorized dealer, should contact their Teledyne Isco dealer for warranty service.**

Before returning any instrument for repair, please call, fax, or e-mail the Teledyne Isco Service Department for instructions. Many problems can often be diagnosed and corrected over the phone, or by e-mail, without returning the instrument to the factory.

Instruments needing factory repair should be packed carefully, and shipped to the attention of the service department. Small, non-fragile items can be sent by insured parcel post. **PLEASE BE SURE TO ENCLOSE A NOTE EXPLAINING THE PROBLEM.**

Shipping Address:	Teledyne Isco - Attention Repair Service 4700 Superior Street Lincoln, NE 68504 USA
Mailing Address:	Teledyne Isco PO Box 82531 Lincoln, NE 68501 USA
Phone:	Repair service: (800) 775-2965 (lab instruments) (866) 298-6174 (samplers & flow meters) Sales & General Information: (800) 228-4373 (USA & Canada)
Fax:	(402) 465-3001
Email:	IscoService@teledyne.com

February 28, 2012 P/N 60-1002-040 Rev G

TELEDYNE ISCO
Everywhereyoulook™

1-1 Controls, connectors, and indicators – 2150 Flow Module 1-5
1-2 Battery Module components, top view 1-6
1-3 Battery Module components, bottom view 1-7
1-4 2150 Area Velocity Sensor Parts 1-8
1-5 Unlocking the Latch 1-9
1-6 Flow Module - Upper connector, capped 1-10
1-7 Flow Module - Upper connector, uncapped 1-10
1-8 Flow Module - Lower connector, plugged 1-10
1-9 Flow Module - Lower connector, unplugged 1-11
1-10 Flow Module - preparing the sensor connectors 1-11
1-11 Flow Module - connecting the sensor 1-11
1-12 Insert Battery in carrier 1-12
1-13 Battery Module - inserting carrier 1-12
1-14 Battery Module - aligning the door 1-13
1-15 Battery Module - closing the door 1-13
1-16 Flow Module - Unlocking the latch 1-14
1-17 Flow Module - Unplugging the connector 1-14
1-18 Flow Module - Pushing plug into holder 1-15
1-19 Battery Module - uncapping the connector 1-15
1-20 Battery Module - inserting the handle 1-16
1-21 Aligning the modules 1-16
1-22 Locking the modules 1-17
1-23 2150 Module Connector Pins 1-20
2-1 Identifying the 2150 voltage specification 2-3
2-2 Identifying the voltage specification on the DB9 cable 2-3
2-3 Installing a Battery 2-6
2-4 Assembling a system (shown: 2 flow modules with 1 battery module) 2-7
2-5 Connecting the AV Sensor 2-10
2-6 Typical Round-pipe Installation 2-14
2-7 Sensor Installed on a Spring Ring 2-15
2-8 Scissors Ring adjustment 2-18
3-1 Flowlink connections 3-1
3-2 Preferred Measurement Location 3-4
3-3 Zero Level Offset Measurement 3-5
4-1 Configuration example 4-3

1-1 Controls, connectors, and indicators – 2150 Flow Module 1-5
1-2 Battery Module Components - Top View 1-6
1-3 Battery Module Components - Bottom View 1-7
1-4 2150 Area Velocity Sensor Parts and Descriptions 1-8
1-5 Specifications – 2150 Area Velocity Flow Module 1-17
1-6 Specifications – 2150 Area Velocity Sensor 1-19
1-7 Specifications – 2191 Battery Module 1-20
1-8 AV Module Connector Pins 1-20
2-1 Voltage Specifications for 2100 System Components 2-2
3-1 Flow Conversion Methods 3-6
D-1 Hazardous Gases D-6