ENVIROCARE *OF UTAH, LLC.*

THE SAFE ALTERNATIVE

CERTIFICATE OF DISPOSAL

GTE Operations Support Inc., Irving

This Certificate acknowledges that the following manifested shipments:

Shipment	Disposal Location	Date	Shipment	Disposal Location	Date
0840-01-0976	Class A	06/13/05 17:42:07			

Representing 952.46 cubic feet of waste has been disposed of at the above listed Disposal Facility. Disposal is subject to Envirocare's Radioactive Material License, all other applicable licenses, permits and regulations, and the Disposal Agreement.

Brent Anderson
Director of LLRW Operations

6/15/05
Date

212638

605 N. 5600 W, Salt Lake City, Utah 84116 Telephone (801) 532-1330

ENVIROCARE *OF UTAH, LLC.*

THE SAFE ALTERNATIVE

CERTIFICATE OF DISPOSAL

GTE Operations Support Inc., Irving

This Certificate acknowledges that the following manifested shipments:

Shipment	Disposal Location	Date	Shipment	Disposal Location	Date
0840-01-0977	Class A	06/10/05 11:58:51	0840-01-0981	Class A	06/10/05 11:34:19
0840-01-0982	Class A	06/10/05 11:58:51	0840-01-0983	Class A	06/10/05 11:34:19
0840-01-0984	Class A	06/10/05 10:04:57	0840-01-0985	Class A	06/10/05 10:04:57
0840-01-0986	Class A	06/10/05 11:34:19	0840-04-0029	Class A	06/10/05 11:58:51

Representing 9,190.86 cubic feet of waste has been disposed of at the above listed Disposal Facility. Disposal is subject to Envirocare's Radioactive Material License, all other applicable licenses, permits and regulations, and the Disposal Agreement.

Brent Anderson
Director of LLRW Operations

6/14/05
Date

605 N. 5600 W, Salt Lake City, Utah 84116 Telephone (801) 532-1330

ENVIROCARE

OF UTAH LLC

THE SAFE ALTERNATIVE

3 mi. S. Ext. 49, I-80
Clive, Utah 84029 EPA
ID: UT982598898

CERTIFICATE OF DISPOSAL

This Certificate acknowledges that the following manifested shipments:

Shipment	Manifest	Date(s) of Disposal	Cu/Ft	Process	Disposal Location
0840-06-0001	26726	06/13/2005	60	Land Fill	Mixed Waste

Representing 60 Cubic feet of waste of at listed Disposal Facility landfill. Disposal is subject to Envirocare's Radioactive Material License, all other applicable licenses, permits and regulations, and the Disposal Agreement.

Under civil and criminal penalties of law for the making or submission of false or fraudulent statements or representations (18 U.S.C 1001 and 15 U.S.C. 2615) I certify that the information contained in or accompanying this document is true, accurate and complete. As to the identification section(s) of this document for which I cannot personally verify truth and accuracy, I certify as the company official having supervisory responsibility for the persons who, acting under my direct instructions, made the verification that this information is true, accurate and complete.

Jesse C. Garcia
Mixed Waste Site Manager

6/13/05
Date

605 N. 5600 W, Salt Lake City, Utah 84116 Telephone (801) 532-1330

ENVIROCARE *OF UTAH, LLC.*

THE SAFE ALTERNATIVE

CERTIFICATE OF DISPOSAL

GTE Operations Support Inc., Irving

This Certificate acknowledges that the following manifested shipments:

Shipment	Disposal Location	Date	Shipment	Disposal Location	Date
0840-01-0978	Class A	06/08/05 10:48:04	0840-01-0979	Class A	06/08/05 10:48:04
0840-01-0980	Class A	06/08/05 10:48:04			

Representing 4,589.40 cubic feet of waste has been disposed of at the above listed Disposal Facility. Disposal is subject to Envirocare's Radioactive Material License, all other applicable licenses, permits and regulations, and the Disposal Agreement.

Brent Anderson
Director of LLRW Operations

6/9/05
Date

605 N. 5600 W, Salt Lake City, Utah 84116 Telephone (801) 532-1330

ENVIROCARE *OF UTAH, LLC.*

THE SAFE ALTERNATIVE

CERTIFICATE OF DISPOSAL

GTE Operations Support Inc., Irving

This Certificate acknowledges that the following manifested shipments:

Shipment	Disposal Location	Date	Shipment	Disposal Location	Date
0840-01-0978	Class A	06/08/05 10:48:04	0840-01-0979	Class A	06/08/05 10:48:04
0840-01-0980	Class A	06/08/05 10:48:04			

Representing 4,589.40 cubic feet of waste has been disposed of at the above listed Disposal Facility. Disposal is subject to Envirocare's Radioactive Material License, all other applicable licenses, permits and regulations, and the Disposal Agreement.

Brent Anderson
Director of LLRW Operations

6/9/05
Date

605 N. 5600 W, Salt Lake City, Utah 84116 Telephone (801) 532-1330

ENVIROCARE

OF UTAH LLC

THE SAFE ALTERNATIVE

3 mi. S. Ext. 49, I-80
Clive, Utah 84029 EPA
ID: UT982598898

CERTIFICATE OF DISPOSAL

This Certificate acknowledges that the following manifested shipments:

Shipment	Manifest	Date(s) of Disposal	Cu/Ft	Process	Disposal Location
0840-06-0001	26726	06/13/2005	60	Land Fill	Mixed Waste

Representing 60 Cubic feet of waste of at listed Disposal Facility landfill. Disposal is subject to Envirocare's Radioactive Material License, all other applicable licenses, permits and regulations, and the Disposal Agreement.

Under civil and criminal penalties of law for the making or submission of false or fraudulent statements or representations (18 U.S.C 1001 and 15 U.S.C. 2615) I certify that the information contained in or accompanying this document is true, accurate and complete. As to the identification section(s) of this document for which I cannot personally verify truth and accuracy, I certify as the company official having supervisory responsibility for the persons who, acting under my direct instructions, made the verification that this information is true, accurate and complete.

Jesse C. Garcia
Mixed Waste Site Manager

6/13/05
Date

605 N. 5600 W, Salt Lake City, Utah 84116 Telephone (801) 532-1330

ENVIROCARE *OF UTAH, LLC.*

THE SAFE ALTERNATIVE

CERTIFICATE OF DISPOSAL

GTE Operations Support Inc., Irving

This Certificate acknowledges that the following manifested shipments:

Shipment	Disposal Location	Date	Shipment	Disposal Location	Date
0840-01-0976	Class A	06/13/05 17:42:07			

Representing 952.46 cubic feet of waste has been disposed of at the above listed Disposal Facility. Disposal is subject to Envirocare's Radioactive Material License, all other applicable licenses, permits and regulations, and the Disposal Agreement.

Brent Anderson
Director of LLRW Operations

6/15/05
Date

605 N. 5600 W, Salt Lake City, Utah 84116 Telephone (801) 532-1330

Russell Reid. mr.john.

RUSSELL REID / MR. JOHN
Corporate Headquarters:
PO Box 130
Keasbey, NJ 08832-0130
www.russellreid.com
www.mrjohn.com

YOUR SERVICE AREA IS: LI

SERVICE TECHNICIAN	Joe Hernandez
DELIVERY DATE	5/11/05
TRUCK # 224	**ROUTE #** RVST L03

JOB LOCATION 035407 - 001	**BILL TO** 035407
GTE 140 Candlewyck Rock Road Cross Street: West John Street Hicksville, NY 11801 Lester Gryskiewicz TEL: (516) 932-9157 CELL:	GTE Operation Support Inc. 800 Hidden Ridge Drive Head Quarters E03e75 Irving, TX 75038 Jean Agonsmelli TEL: (972) 718-4806

ORDER DESCRIPTION RR Pump (On-Call) | TERMS: Net 10 Days | START TIME: 12:00 am | END TIME: 12:00 am | TIME IN: | TIME OUT:

ORDER DATE	DATE WANTED	PURCHASE ORDER/JOB ORDER #	ORDERED BY	ORDER #
05/10/05	05/12/05		Lester G	0000078455

ASSIGNED DISPOSAL SITE	MANIFEST NUMBER
[illegible]	[illegible]

SCH. QTY	UNIT TYPE	DESCRIPTION
	RI PUMP	RR Industrial Services - Pump

CHARGE	TYPE		
6.000	RI WWOT	CH	Industrial Waste Water Gallons (Taxable)
2	RR FUEL	CH	RR Fuel Surcharge

PAYMENT METHOD: CASH CHECK #
CC # CC EXP DT

SERVICE NOTES
Pull (2) loads of 3,000 gallons.
Replaces W/O #47150 ... had to be rebilled on DAILY .... other account is CYCLE Bill
ACCESS:
Cross Street is West John Street
DETAILED NOTES:
Pull (1 or 2) 3,000 gallon loads from Acier Frac Tank - Loads to Bay Park
Ask for Lester G at gate on site 516-932-9157

[illegible] gals

0000078455

VISA

ACKNOWLEDGEMENT AND WAIVER: *All work performed is subject to the appropriate waiver and conditions listed on the reverse side of this receipt. Receipt and signature of acceptance is considered binding upon the parties hereto.*

Authorized Signature [illegible] Print Name [illegible] Date 5/12/05 Title

THOMAS R. SUOZZI
COUNTY EXECUTIVE

PETER J. GERBASI
COMMISSIONER

COUNTY OF NASSAU
DEPARTMENT OF PUBLIC WORKS
1194 PROSPECT AVENUE
WESTBURY, NEW YORK 11590-2723

May 11, 2005

Mr. Michael Hollander
Russel Reid Waste Haulers
10 Logrande Court
Bohemia, New York 11716

Re: Fromer Sylvania Site
Cantiague Rock Road
Hicksville, New York

Dear Mr. Hollander:

Your request to dispose of approximately 6,000 gallons of decon water from the above referenced site at the "Bay Park Scavenger Waste Disposal Facility" has been reviewed and is approved. Wastewater received at the facility is treated at the Bay Park Sewage Treatment Plant, SPDES # NY 0026450. Bay Park is a gravity settling primary/activated sludge secondary treatment facility. Treated effluent is discharged to Reynolds Channel in East Rockaway.

This determination is based on prior lab analysis of the wastewater and the non-hazardous nature of the subject wastes. This approval is limited to the liquid phase only.

The wastewater must be pumped and transported by a New York State Department of Environmental Conservation approved and Nassau County permitted company.

Thank you for your concern and cooperation. If you have ay additional questions, please feel free to contact me at (516) 571-7352.

Very truly yours,

Vincent Alonge for
Maurice J. Osman
Chief Chemist

MJO:jld
c: Richard Cotugno, Nassau County Department of Public Works

F:\DISPOSAL REQUEST.DOC 5/11/05

REVISION
DATA VALIDATION REPORT - Level II Review

SDG No.	**F5D300120**	**Fraction:**	**VOC, SVOC, Metals, & pH**
Lab:	**STL - St. Louis**	**Project Name:**	**GTE Hicksville**
Reviewer:	**JA**	**Date:**	**May 5, 2005**

This report presents the findings of a review of the referenced data. The report consists of this summary, a listing of the samples included in the review, copies of data reports with data qualifying flags applied, supporting documentation, and an explanation of the data qualifying flags employed. The review performed is based on the US EPA Region II Guidelines as it pertains to the specifics of the analytical method employed and provisions of the approved project-specific QAPP.

Major Anomalies: None.

Minor Anomalies: For the VOC analyses, the method blank for batch 5123229 displayed a positive detection for 1,4-dichlorobenzene at 0.14 ug/L. Since this compound was not detected in the associated sample, no data qualifying action was taken.

The trip blank displayed positive detections for chloroform at 0.22 ug/L and methylene chloride at 4.2 ug/L. Since these two compounds were not detected in the associated sample, no data qualifying action was taken.

For the SVOC analyses, the method blank for batch 5123396 displayed positive detections for hexachloroethane at 4.1 ug/L and two tentatively identified compounds (TICs) at 4.2 ug/L (RT=9.1627 min) and 7.0 ug/L (RT=17.998 min). One of these two TICs was also detected in sample DECON WATER at a concentration less than five times method blank concentration. This TIC result was flagged "U,z".

The laboratory control sample displayed relative percent differences (RPDs) greater than the acceptance limit (i.e., 20%) for hexachloroethane at 21%, hexachlorobutadiene at 23%, and hexachlorocyclopentadiene at 26%. Since these three compounds were not detected in the associated sample, no data qualifying action was taken.

The sample, DECON WATER, displayed two tentatively identified compounds. Laboratory flags of "NJ" and validation flags of "NJ,t" were manually entered, unless previously flagged for method blank contamination.

For the metals analyses, the preparation blank displayed positive detections for aluminum, barium, calcium, and zinc. Since these detections were less than the reporting limit, no data qualifying action was taken. The associated positive sample results in sample DECON WATER were greater than five times the blank concentrations and no impact on data usability was anticipated.

The matrix spike sample pair displayed percent recoveries outside the control limits for aluminum and iron. Since aluminum and iron results in the parent sample were greater than four times the spiking concentration, no data qualifying action was taken.

The pH was analyzed outside of the 24 hour time period. The field sample results were positive and were flagged "J,h".

Correctable Anomalies: Arsenic, lead, selenium, and thallium results were reported twice on Form Is. These extra results were crossed out by the reviewer.

Comments: On the basis of this evaluation, the laboratory appears to have followed the specified analytical method. Except data flagged "R", all data are usable, as qualified, for their intended purpose based on the data reviewed.

Signed: Ai, Thai-Lhe

Jason Ai

DATA VALIDATION REPORT - Level II Preliminary Review

SDG No.: __F5D300120____ **Fraction:** ___Alpha & Gamma Spectroscopy_____

Lab: ___STL/St. Louis____ **Project Name:** _____GTE Hicksville_____

Reviewer: _____JA_____ **Date:** _____May 5, 2005_____

This report presents the findings of a review of the referenced data. The report consists of this summary, a listing of the samples included in the review, copies of data reports with data qualifying flags applied (as required), the data review checklist, supporting documentation, and an explanation of the data qualifying flags employed. The review performed is based on the GTE Hicksville Project QAPP, the Science Applications International Corporation (SAIC) Laboratory Data Validation Guidelines for Evaluating Radionuclide Analysis (143-ARCS-93.08 Revision 06), and the specifics of the analytical method employed.

Major Anomalies: None.

Minor Anomalies: For the alpha spectroscopy analyses, the method blank for batch 5120105 displayed a positive detection for thorium-230 at 0.27 pCi/L. Since thorium-230 was not detected in sample DECON WATER, no data qualifying action was necessary.

The tracer recovery for thorium-229 was less than the lower control limit (i.e., 45%) at 42% in sample DECON WATER. All associated sample results were non-detect and were flagged "UJ,w".

Correctable Anomalies: Several sample results were reported as non-detect at values less than the minimum detectable concentration (MDC) in each sample. These results were elevated to the MDC by the reviewer and flagged "U,Q1", unless previously flagged for tracer recovery anomaly.

Comments: The uranium-235 result in sample DECON WATER was less than 0.1 pCi/g and was flagged "J" by the laboratory denoting a positive detection less than the reporting limit specified in the QAPP.

On the basis of this evaluation, the laboratory appears to have followed the specified method, with the exception of anomalies discussed above. Except for data flagged "R", all data are usable, as qualified, for their intended purpose based on the data reviewed.

Signed: Ai, Chai-Chu

Jason Ai

SAMPLE SUMMARY

F5D300120

WO #	SAMPLE#	CLIENT SAMPLE ID	SAMPLED DATE	SAMP TIME
G9KND	001	DECON WATER (BAKER TANK)	04/29/05	09:45
G9K3H	002	TRIP BLANK	04/29/05	

NOTE(S):

- The analytical results of the samples listed above are presented on the following pages.
- All calculations are performed before rounding to avoid round-off errors in calculated results.
- Results noted as "ND" were not detected at or above the stated limit.
- This report must not be reproduced, except in full, without the written approval of the laboratory.
- Results for the following parameters are never reported on a dry weight basis: color, corrosivity, density, flashpoint, ignitability, layers, odor, paint filter test, pH, porosity pressure, reactivity, redox potential, specific gravity, spot tests, solids, solubility, temperature, viscosity, and weight.

GTE OPERATIONS SUPPORT INCORPORATED

Client Sample ID: DECON WATER (BAKER TANK)

GC/MS Volatiles

Lot-Sample #...: F5D300120-001 **Work Order #...:** G9KND1AA **Matrix.....:** WATER
Date Sampled...: 04/29/05 09:45 **Date Received..:** 04/30/05
Prep Date.....: 05/02/05 **Analysis Date..:** 05/02/05
Prep Batch #...: 5123229 **Analysis Time..:** 21:30
Dilution Factor: 1
Method.....: SW846 8260B

PARAMETER	RESULT	REPORTING LIMIT	UNITS	MDL
Acetone	ND	2.0	ug/L	0.21
Benzene	ND	1.0	ug/L	0.050
Bromodichloromethane	ND	1.0	ug/L	0.080
Bromoform	ND	1.0	ug/L	0.17
Bromomethane	ND	2.0	ug/L	0.23
2-Butanone	ND	5.0	ug/L	0.33
Carbon disulfide	ND	1.0	ug/L	0.25
Carbon tetrachloride	ND	1.0	ug/L	0.090
Chlorobenzene	ND	1.0	ug/L	0.050
Dibromochloromethane	ND	1.0	ug/L	0.090
Chloroethane	ND	2.0	ug/L	0.11
Chloroform	ND	1.0	ug/L	0.070
Chloromethane	ND	2.0	ug/L	0.19
1,1-Dichloroethane	ND	1.0	ug/L	0.070
1,2-Dichloroethane	ND	1.0	ug/L	0.090
cis-1,2-Dichloroethene	ND	1.0	ug/L	0.27
trans-1,2-Dichloroethene	ND	1.0	ug/L	0.080
1,1-Dichloroethene	ND	1.0	ug/L	0.040
1,2-Dichloropropane	ND	1.0	ug/L	0.10
cis-1,3-Dichloropropene	ND	1.0	ug/L	0.13
trans-1,3-Dichloropropene	ND	1.0	ug/L	0.070
Ethylbenzene	ND	1.0	ug/L	0.070
2-Hexanone	ND	5.0	ug/L	0.20
Methylene chloride	ND	1.0	ug/L	0.12
4-Methyl-2-pentanone (MIBK)	ND	5.0	ug/L	0.10
Styrene	ND	1.0	ug/L	0.13
1,1,2,2-Tetrachloroethane	ND	1.0	ug/L	0.080
Tetrachloroethene	**3.1**	**1.0**	**ug/L**	**0.10**
Toluene	ND	1.0	ug/L	0.080
1,1,1-Trichloroethane	ND	1.0	ug/L	0.080
1,1,2-Trichloroethane	ND	1.0	ug/L	0.070
Trichloroethene	ND	1.0	ug/L	0.13
Vinyl chloride	ND	1.0	ug/L	0.070
Xylenes (total)	ND	1.0	ug/L	0.13
1,2-Dichlorobenzene	ND	1.0	ug/L	0.090
1,3-Dichlorobenzene	ND	1.0	ug/L	0.040
1,4-Dichlorobenzene	ND	1.0	ug/L	0.090

(Continued on next page)

GTE OPERATIONS SUPPORT INCORPORATED

DECON WATER (BAKER TANK)

GC/MS Volatiles

Lot-Sample #: F5D300120-001 **Work Order #:** G9KND1AA **Matrix:** WATER

MASS SPECTROMETER/DATA SYSTEM (MSDS) TENTATIVELY IDENTIFIED COMPOUNDS

PARAMETER	CAS #	ESTIMATED RESULT	RETENTION TIME	UNITS
None				ug/L

GTE OPERATIONS SUPPORT INCORPORATED

Client Sample ID: TRIP BLANK

GC/MS Volatiles

Lot-Sample #...: F5D300120-002 **Work Order #...:** G9K3H1AA **Matrix.....:** WATER
Date Sampled...: 04/29/05 **Date Received..:** 04/30/05
Prep Date.....: 05/02/05 **Analysis Date..:** 05/02/05
Prep Batch #...: 5123229 **Analysis Time..:** 21:53
Dilution Factor: 1

Method.....: SW846 8260B

PARAMETER	RESULT	REPORTING LIMIT	UNITS	MDL
Acetone	ND	2.0	ug/L	0.21
Benzene	ND	1.0	ug/L	0.050
Bromodichloromethane	ND	1.0	ug/L	0.080
Bromoform	ND	1.0	ug/L	0.17
Bromomethane	ND	2.0	ug/L	0.23
2-Butanone	ND	5.0	ug/L	0.33
Carbon disulfide	ND	1.0	ug/L	0.25
Carbon tetrachloride	ND	1.0	ug/L	0.090
Chlorobenzene	ND	1.0	ug/L	0.050
Dibromochloromethane	ND	1.0	ug/L	0.090
Chloroethane	ND	2.0	ug/L	0.11
Chloroform	**0.22 J**	**1.0**	**ug/L**	**0.070**
Chloromethane	ND	2.0	ug/L	0.19
1,1-Dichloroethane	ND	1.0	ug/L	0.070
1,2-Dichloroethane	ND	1.0	ug/L	0.090
cis-1,2-Dichloroethene	ND	1.0	ug/L	0.27
trans-1,2-Dichloroethene	ND	1.0	ug/L	0.080
1,1-Dichloroethene	ND	1.0	ug/L	0.040
1,2-Dichloropropane	ND	1.0	ug/L	0.10
cis-1,3-Dichloropropene	ND	1.0	ug/L	0.13
trans-1,3-Dichloropropene	ND	1.0	ug/L	0.070
Ethylbenzene	ND	1.0	ug/L	0.070
2-Hexanone	ND	5.0	ug/L	0.20
Methylene chloride	**4.2**	**1.0**	**ug/L**	**0.12**
4-Methyl-2-pentanone (MIBK)	ND	5.0	ug/L	0.10
Styrene	ND	1.0	ug/L	0.13
1,1,2,2-Tetrachloroethane	ND	1.0	ug/L	0.080
Tetrachloroethene	ND	1.0	ug/L	0.10
Toluene	ND	1.0	ug/L	0.080
1,1,1-Trichloroethane	ND	1.0	ug/L	0.080
1,1,2-Trichloroethane	ND	1.0	ug/L	0.070
Trichloroethene	ND	1.0	ug/L	0.13
Vinyl chloride	ND	1.0	ug/L	0.070
Xylenes (total)	ND	1.0	ug/L	0.13
1,2-Dichlorobenzene	ND	1.0	ug/L	0.090
1,3-Dichlorobenzene	ND	1.0	ug/L	0.040
1,4-Dichlorobenzene	ND	1.0	ug/L	0.090

(Continued on next page)

GTE OPERATIONS SUPPORT INCORPORATED

TRIP BLANK

GC/MS Volatiles

Lot-Sample #: F5D300120-002 **Work Order #:** G9K3H1AA **Matrix:** WATER

MASS SPECTROMETER/DATA SYSTEM (MSDS) TENTATIVELY IDENTIFIED COMPOUNDS

PARAMETER	CAS #	ESTIMATED RESULT	RETENTION TIME	UNITS
None				ug/L

GTE OPERATIONS SUPPORT INCORPORATED

Client Sample ID: DECON WATER (BAKER TANK)

GC/MS Semivolatiles

Lot-Sample #...: F5D300120-001 **Work Order #...:** G9KND1AC **Matrix.....:** WATER
Date Sampled...: 04/29/05 09:45 **Date Received..:** 04/30/05
Prep Date.....: 05/03/05 **Analysis Date..:** 05/04/05
Prep Batch #...: 5123396 **Analysis Time..:** 12:36
Dilution Factor: 1
Method.....: SW846 8270C

PARAMETER	RESULT	REPORTING LIMIT	UNITS	MDL
Phenol	ND	10	ug/L	0.52
bis(2-Chloroethyl)-ether	ND	10	ug/L	1.9
2-Chlorophenol	ND	10	ug/L	1.6
1,3-Dichlorobenzene	ND	10	ug/L	2.3
1,4-Dichlorobenzene	ND	10	ug/L	2.4
1,2-Dichlorobenzene	ND	10	ug/L	2.0
2-Methylphenol	ND	10	ug/L	1.2
2,2'-oxybis(1-Chloropropane)	ND	10	ug/L	1.1
4-Methylphenol	ND	20	ug/L	1.5
N-Nitrosodi-n-propyl-amine	ND	10	ug/L	2.0
Hexachloroethane	ND	10	ug/L	2.4
Nitrobenzene	ND	10	ug/L	2.0
Isophorone	ND	10	ug/L	1.8
2-Nitrophenol	ND	10	ug/L	1.6
2,4-Dimethylphenol	ND	10	ug/L	1.6
bis(2-Chloroethoxy) methane	ND	10	ug/L	1.8
2,4-Dichlorophenol	ND	10	ug/L	1.6
1,2,4-Trichloro-benzene	ND	10	ug/L	2.1
Naphthalene	ND	10	ug/L	2.0
4-Chloroaniline	ND	10	ug/L	1.8
Hexachlorobutadiene	ND	10	ug/L	0.29
4-Chloro-3-methylphenol	ND	10	ug/L	1.6
2-Methylnaphthalene	ND	10	ug/L	2.2
Hexachlorocyclopenta-diene	ND	50	ug/L	2.5
2,4,6-Trichloro-phenol	ND	10	ug/L	1.5
2,4,5-Trichloro-phenol	ND	10	ug/L	1.4
2-Chloronaphthalene	ND	10	ug/L	1.8
2-Nitroaniline	ND	50	ug/L	1.7
Dimethyl phthalate	ND	10	ug/L	1.9
Acenaphthylene	ND	10	ug/L	1.8
2,6-Dinitrotoluene	ND	10	ug/L	1.7

(Continued on next page)

GTE OPERATIONS SUPPORT INCORPORATED

Client Sample ID: DECON WATER (BAKER TANK)

GC/MS Semivolatiles

Lot-Sample #...: F5D300120-001 **Work Order #...:** G9KND1AC **Matrix.....:** WATER

PARAMETER	RESULT	REPORTING LIMIT	UNITS	MDL
3-Nitroaniline	ND	50	ug/L	1.7
Acenaphthene	ND	10	ug/L	1.9
2,4-Dinitrophenol	ND	50	ug/L	6.7
4-Nitrophenol	ND	50	ug/L	3.2
Dibenzofuran	ND	10	ug/L	2.0
2,4-Dinitrotoluene	ND	10	ug/L	1.8
Diethyl phthalate	ND	10	ug/L	2.3
Fluorene	ND	10	ug/L	2.0
4-Chlorophenyl phenyl ether	ND	10	ug/L	2.0
4-Nitroaniline	ND	50	ug/L	1.9
4,6-Dinitro-2-methylphenol	ND	50	ug/L	1.3
N-Nitrosodiphenylamine	ND	10	ug/L	2.1
4-Bromophenyl phenyl ether	ND	10	ug/L	1.9
Hexachlorobenzene	ND	10	ug/L	1.8
Pentachlorophenol	ND	50	ug/L	1.4
Phenanthrene	ND	10	ug/L	2.2
Anthracene	ND	10	ug/L	2.2
Carbazole	ND	10	ug/L	2.3
Di-n-butyl phthalate	ND	10	ug/L	3.6
Fluoranthene	ND	10	ug/L	2.4
Pyrene	ND	10	ug/L	2.3
Butyl benzyl phthalate	ND	10	ug/L	2.9
Benzo(a)anthracene	ND	10	ug/L	2.3
3,3'-Dichlorobenzidine	ND	50	ug/L	2.4
Chrysene	ND	10	ug/L	2.3
bis(2-Ethylhexyl) phthalate	**3.2 J**	**10**	**ug/L**	**2.6**
Di-n-octyl phthalate	ND	10	ug/L	2.3
Benzo(b)fluoranthene	ND	10	ug/L	2.2
Benzo(k)fluoranthene	ND	10	ug/L	2.5
Benzo(a)pyrene	ND	10	ug/L	2.2
Indeno(1,2,3-cd)pyrene	ND	10	ug/L	1.9
Benzo(ghi)perylene	ND	10	ug/L	2.4
Dibenzo(a,h)anthracene	ND	10	ug/L	2.4

SURROGATE	PERCENT RECOVERY	RECOVERY LIMITS
2-Fluorophenol	26	(10 - 115)
Phenol-d5	18	(10 - 115)
Nitrobenzene-d5	52	(22 - 115)
2-Fluorobiphenyl	57	(18 - 115)
2,4,6-Tribromophenol	61	(10 - 118)
Terphenyl-d14	48	(10 - 115)

(Continued on next page)

GTE OPERATIONS SUPPORT INCORPORATED

DECON WATER (BAKER TANK)

GC/MS Semivolatiles

Lot-Sample #: F5D300120-001 **Work Order #:** G9KND1AC **Matrix:** WATER

MASS SPECTROMETER/DATA SYSTEM (MSDS) TENTATIVELY IDENTIFIED COMPOUNDS

PARAMETER	CAS #	ESTIMATED RESULT		RETENTION TIME	UNITS		
Unknown		9.0	M	9.1505	ug/L	NJ	U,z
Unknown		6.6	M	14.401	ug/L	NJ	NJ,t

NOTE(S):

M: Result was measured against nearest internal standard assuming a response factor of 1.

GTE OPERATIONS SUPPORT INCORPORATED

Client Sample ID: DECON WATER (BAKER TANK)

TOTAL Metals

Lot-Sample #...: F5D300120-001 **Matrix.....:** WATER
Date Sampled...: 04/29/05 09:45 **Date Received..:** 04/30/05

PARAMETER	RESULT	REPORTING LIMIT	UNITS	METHOD	PREPARATION-ANALYSIS DATE	WORK ORDER #
Prep Batch #...: 5123437						
Silver	ND	10	ug/L	SW846 6010B	05/03-05/04/05	G9KND1AH
		Dilution Factor: 1		Analysis Time..: 13:50	MDL.....: 2.21	
Aluminum	**11300 N**	**200**	**ug/L**	**SW846 6010B**	**05/03-05/04/05**	**G9KND1AJ**
		Dilution Factor: 1		Analysis Time..: 13:50	MDL.....: 16.6	
Barium	**79.1 B**	**200**	**ug/L**	**SW846 6010B**	**05/03-05/04/05**	**G9KND1AK**
		Dilution Factor: 1		Analysis Time..: 13:50	MDL.....: 0.321	
Beryllium	**1.1 B**	**5**	**ug/L**	**SW846 6010B**	**05/03-05/04/05**	**G9KND1AL**
		Dilution Factor: 1		Analysis Time..: 13:50	MDL.....: 0.18	
Calcium	**34600**	**5000**	**ug/L**	**SW846 6010B**	**05/03-05/04/05**	**G9KND1AM**
		Dilution Factor: 1		Analysis Time..: 13:50	MDL.....: 10.7	
Cadmium	ND	5	ug/L	SW846 6010B	05/03-05/04/05	G9KND1AN
		Dilution Factor: 1		Analysis Time..: 13:50	MDL.....: 0.864	
Cobalt	**8.3 B**	**50**	**ug/L**	**SW846 6010B**	**05/03-05/04/05**	**G9KND1AP**
		Dilution Factor: 1		Analysis Time..: 13:50	MDL.....: 1.66	
Chromium	**14.4**	**10**	**ug/L**	**SW846 6010B**	**05/03-05/04/05**	**G9KND1AQ**
		Dilution Factor: 1		Analysis Time..: 13:50	MDL.....: 1.91	
Copper	**23.4 B**	**25**	**ug/L**	**SW846 6010B**	**05/03-05/04/05**	**G9KND1AR**
		Dilution Factor: 1		Analysis Time..: 13:50	MDL.....: 4.27	
Iron	**11800 N**	**100**	**ug/L**	**SW846 6010B**	**05/03-05/04/05**	**G9KND1AT**
		Dilution Factor: 1		Analysis Time..: 09:59	MDL.....: 12.6	
Potassium	**6970**	**5000**	**ug/L**	**SW846 6010B**	**05/03-05/04/05**	**G9KND1AU**
		Dilution Factor: 1		Analysis Time..: 09:59	MDL.....: 1610	
Magnesium	**5220**	**5000**	**ug/L**	**SW846 6010B**	**05/03-05/04/05**	**G9KND1AV**
		Dilution Factor: 1		Analysis Time..: 13:50	MDL.....: 136.998	
Manganese	**596**	**15**	**ug/L**	**SW846 6010B**	**05/03-05/04/05**	**G9KND1AW**
		Dilution Factor: 1		Analysis Time..: 13:50	MDL.....: 0.836	

(Continued on next page)

GTE OPERATIONS SUPPORT INCORPORATED

Client Sample ID: DECON WATER (BAKER TANK)

TOTAL Metals

Lot-Sample #...: F5D300120-001 **Matrix.....:** WATER

PARAMETER	RESULT	REPORTING LIMIT	UNITS	METHOD	PREPARATION-ANALYSIS DATE	WORK ORDER #
Sodium	**44400**	**5000**	**ug/L**	**SW846 6010B**	**05/03-05/04/05**	**G9KND1AX**
		Dilution Factor: 1		Analysis Time..: 09:59	MDL.....: 380	
Nickel	**21.0 B**	**40**	**ug/L**	**SW846 6010B**	**05/03-05/04/05**	**G9KND1A0**
		Dilution Factor: 1		Analysis Time..: 13:50	MDL.....: 3.97	
Antimony	ND	10	ug/L	SW846 6010B	05/03-05/04/05	G9KND1A1
		Dilution Factor: 1		Analysis Time..: 13:50	MDL.....: 1.587	
Vanadium	**19.5 B**	**50**	**ug/L**	**SW846 6010B**	**05/03-05/04/05**	**G9KND1A2**
		Dilution Factor: 1		Analysis Time..: 13:50	MDL.....: 1.45	
Zinc	**173**	**20**	**ug/L**	**SW846 6010B**	**05/03-05/04/05**	**G9KND1A3**
		Dilution Factor: 1		Analysis Time..: 09:59	MDL.....: 1.18	
Arsenic	**4.5 B**	**10**	**ug/L**	**SW846 6010B**	**05/03-05/04/05**	**G9KND1AD**
		Dilution Factor: 1		Analysis Time..: 13:50	MDL.....: 1.33	
~~**Arsenic**~~	~~**4.5 B**~~	~~**10**~~	~~**ug/L**~~	~~**SW846 6010B**~~	~~**05/03-05/04/05**~~	~~**G9KND1A4**~~
		Dilution Factor: 1		Analysis Time..: 13:50	MDL.....: 1.33	
Lead	**26.2**	**10**	**ug/L**	**SW846 6010B**	**05/03-05/04/05**	**G9KND1AE**
		Dilution Factor: 1		Analysis Time..: 13:50	MDL.....: 1.62	
~~**Lead**~~	~~**26.2**~~	~~**10**~~	~~**ug/L**~~	~~**SW846 6010B**~~	~~**05/03-05/04/05**~~	~~**G9KND1A5**~~
		Dilution Factor: 1		Analysis Time..: 13:50	MDL.....: 1.62	
Selenium	ND	15	ug/L	SW846 6010B	05/03-05/04/05	G9KND1AF
		Dilution Factor: 1		Analysis Time..: 13:50	MDL.....: 1.828	
~~**Selenium**~~	~~**ND**~~	~~**15**~~	~~**ug/L**~~	~~**SW846 6010B**~~	~~**05/03-05/04/05**~~	~~**G9KND1A6**~~
		Dilution Factor: 1		Analysis Time..: 13:50	MDL.....: 1.828	
Thallium	**6.1 B**	**10**	**ug/L**	**SW846 6010B**	**05/03-05/04/05**	**G9KND1AG**
		Dilution Factor: 1		Analysis Time..: 13:50	MDL.....: 2.5	
~~**Thallium**~~	~~**6.1 B**~~	~~**10**~~	~~**ug/L**~~	~~**SW846 6010B**~~	~~**05/03-05/04/05**~~	~~**G9KND1A7**~~
		Dilution Factor: 1		Analysis Time..: 13:50	MDL.....: 2.5	

NOTE(S):

N Spiked analyte recovery is outside stated control limits.

B Estimated result. Result is less than RL.

GTE OPERATIONS SUPPORT INCORPORATED

Client Sample ID: DECON WATER (BAKER TANK)

Severn Trent Laboratories - Radiochemistry

Lab Sample ID: F5D300120-001
Work Order: G9KND
Matrix: WATER

Date Collected: 04/29/05 0945
Date Received: 04/30/05 0830

Parameter	Result	Qual	Total Uncert. (2 σ+/-)	MDC	Prep Date	Analysis Date	Batch #	Yld %
Gamma Cs-137 & Hits by DOE GA-01-R MOD.			pCi/L		GA-01-R MOD			
Actinium 228	~~3.6~~ 53	U U, Q1	27	53	04/30/05	05/01/05	5120102	
Bismuth 212	~~8.6~~ 110	U	54	110	04/30/05	05/01/05	5120102	
Bismuth 214	~~6.8~~ 32	U	16	32	04/30/05	05/01/05	5120102	
Lead 212	~~4.6~~ 22	U	11	22	04/30/05	05/01/05	5120102	
Lead 214	~~17.4~~ 30	U	14	30	04/30/05	05/01/05	5120102	
Protactinium 234M	~~840.~~ 1500	U	920	1500	04/30/05	05/01/05	5120102	
Radium (226)	~~6.~~ 32	U	16	32	04/30/05	05/01/05	5120102	
Radium 228	~~3.~~ 53	U	27	53	04/30/05	05/01/05	5120102	
Thallium 208	~~5.2~~ 17	U	8.5	17	04/30/05	05/01/05	5120102	
Thorium 232	~~3.~~ 53	U	27	53	04/30/05	05/01/05	5120102	
Thorium 234	~~30.~~ 220	U	110	220	04/30/05	05/01/05	5120102	
Uranium 235	~~52.~~ 150	U	80	150	04/30/05	05/01/05	5120102	
Uranium 238	~~30.~~ 220	U	110	220	04/30/05	05/01/05	5120102	
Iso THORIUM (SHORT CT) NAS & DOE MOD			pCi/L		3004/RP-725			
Thorium 228	~~0.09~~ 0.35	U UJ,W	0.22	0.35	04/30/05	05/02/05	5120105	42
Thorium 230	~~0.23~~ 0.27	U UJ,W	0.23	0.27	04/30/05	05/02/05	5120105	42
Thorium 232	~~0.12~~ 0.20	U UJ,W	0.16	0.20	04/30/05	05/02/05	5120105	42
Iso URANIUM (SHORT CT) NAS & DOE MOD			pCi/L		3050/RP-725			
Uranium 234	3.95		0.69	0.06	04/30/05	05/02/05	5120106	80
Uranium 235	0.16	J	0.14	0.12	04/30/05	05/02/05	5120106	80
Uranium 238	4.23		0.72	0.1	04/30/05	05/02/05	5120106	80

VALUE CHANGE

NOTE(S)

Data are incomplete without the case narrative.

MDC is determined by instrument performance only.
Bold results are greater than the MDC

J Result is greater than sample detection limit but less than stated reporting limit.
U Result is less than the sample detection limit.

GTE OPERATIONS SUPPORT INCORPORATED

Client Sample ID: DECON WATER (BAKER TANK)

General Chemistry

Lot-Sample #...: F5D300120-001 **Work Order #...:** G9KND **Matrix.....:** WATER
Date Sampled...: 04/29/05 09:45 **Date Received..:** 04/30/05

PARAMETER	RESULT	RL	UNITS	METHOD	PREPARATION-ANALYSIS DATE	PREP BATCH #
pH (liquid)	7.6 J.h		No Units	SW846 9040	05/02/05	5123265

Dilution Factor: 1 Analysis Time..: 00:00 MDL.....:

DATA VALIDATION WORKSHEET - Level III Review
VOLATILE ORGANIC ANALYSIS - REGION II for RCRA

Reviewer: JA
Date: 5/5/05
Lab: STL St. Louis

Project Name: GTEOSI
Project Number: 25595516
SDG No.: F5D300120

1.0 Chain of Custody/Sample Condition

		Yes	No	NA
1.1	Do Chain-of-Custody forms list all samples analyzed?	[✓]		
1.2	Are all Chain-of-Custody forms signed, indicating sample chain-of-custody was maintained?	[✓]		
1.3	Do the Traffic Reports, chain-of-custody, and lab narrative indicate any problems with sample receipt, condition of samples,		[✓]	
1.4	Do sample preservation, collection and storage condition meet method requirement?	[✓]		
	If samples were not on ice or the ice was melted upon arrival at the laboratory and the temperature of the cooler was elevated (> 10 °C), then flag all positive results with a "J" and all non-detects "UJ".			
1.5	Is any sample analyzed as a soil, other than TCLP, contains 50% -90% water? If yes, J(+)/UJ(-). If a soil sample other than TCLP contains more than 90% water, J(+) R(-).		[✓]	✓
1.6	Do all VOA vials contain bubbles >6mm? If yes, J(+)/R(-)		[✓]	

Note:

Cooler Temp: 2°C

2.0 Holding Time

		Yes	No	NA
2.1	Have any technical holding times, determined from sampling to date of analysis, been exceeded? (See attached Holding Time Table for sample holding time) If yes, J(+)/UJ(-).		[✓]	

Matrix	Preserved	Aromatic	All others
Aqueous	No/Yes	7 days/14 days	14 days
Soil/Sediment	4 °C ± 2 °C	14 days	14 days

		Yes	No	NA
2.2	Have any technical holding times been grossly (twice the holding time) exceeded? If yes, J(+)/R(-).		[✓]	

Note:

Date Collected	Date Analyzed	H.T.
4/29/05	5/2/05	3 days

3.0 GC/MS Instrument Performance Check (IPC)

		Yes	No	NA
3.1	Are GC/MS Tuning and Mass Calibration forms present for bromofluorobenzene (BFB)?	[ ]		✓
3.2	Have all samples been analyzed within twelve hours of the BFB tune?	[ ]		✓
	If twelve hours have elapsed according to the system clock, and the laboratory analyzed standards, blanks, field samples or QC samples after twelve (12) hours, the data for the affected samples are rejected "R".			✓
3.3	Have ion abundance criteria for BFB been met for each instrument used?	[ ]		
	If the BFB criteria were not met prior to the analyses of the standards, blanks, field samples and QC samples, all standards,			

Note:

4.0 Blanks (Method Blanks, Field Blanks and Trip Blanks)

		Yes	No	NA
4.1	Is a Method Blank Summary form present for each matrix, each GC/MS system used to analyze volatile samples and each extraction batch (medium level soil)?	[✓]		
4.2	Has a method blank been analyzed for each set of samples or every 20 samples of similar matrix, (water, low soil, medium soil) whichever is more frequent?	[✓]		
4.3	Do any method/instrument/reagent blanks have positive results (TCL, and/or TIC) for VOAs?	✓	[ ]	
4.4	Do any field/trip rinse/equipment blanks have positive VOA results (TCL, and/or TIC)?	✓	[ ]	
4.5	Are there field/trip/rinse/equipment blanks associated with every sample?	[✓]		

Apply the 5X or 10X (for common contaminants - CH_2Cl_2, acetone, toluene, and 2-butanone) rule per the Region II Guidelines

Note: MB - 1,4-dichlorobenzene 0.14 ug/L (prep. batch 472329)

Trip Blank - chloroform 0.22 ug/L ; CH_2Cl_2 4.2 ug/L

All NDs in Decon Water OK

5.0 GC/MS Initial Calibration

		Yes	No	NA
5.1	Are Initial Calibration summary forms present and complete for each instrument used?	[ ]		✓
5.2	Are calibrations linear for over the concentration range of the calibration applying either %RSD <15% or r >0.995? Non-linear: J(+)/UJ(-) or %RSD > 90% J(+)/R(-).	[ ]		✓
5.3	Do any compounds have an RRF < 0.05? If yes, J(+)/R(-) or professional judgement.		[ ]	✓

Note:

Level II only

6.0 Continuing Calibration

		Yes	No	NA
6.1	Are Continuing Calibration summary forms present and complete for each instrument used?	[ ]		✓
6.2	Has a continuing calibration standard been analyzed for every 12 hours of sample analysis per instrument?	[ ]		✓
6.3	Do any compounds have a % drift (%D) values between initial and continuing calibration RRF outside QC limits (%D < 20%)? If yes, J(+)/UJ(-) or %D > 90% J(+)/R(-). If %D is >20% but <90% with positive bias, J(+) only; if %D is >20% and <90% with negative bias, J(+)/UJ(-)		[ ]	✓
6.4	Do any continuing standard compounds have a RRF < 0.05? If yes, J(+)/R(-) or professional judgement.		[ ]	✓

Note:

Level II only.

7.0 Surrogate Recovery

		Yes	No	NA
7.1	Are all samples listed on the appropriate Surrogate Recovery Summary Form ?	[✓]		
7.2	Are surrogate recoveries within acceptance criteria for all samples and method blanks?	[✓]		
7.3	If No in Section 7.2, are these sample(s) or method blank(s) reanalyzed?	[ ]		✓
7.4	If No in Section 7.3, is any sample dilution factor greater than 10? (Surrogate recoveries may be diluted out.)	[ ]		✓

Note: If SMC recoveries do not meet criteria in the MS/MSD and diluted samples, then no reanalysis is required.

	> UCL	25% to LCL	< 25%
Positive	J	J	J
Non-detect	None	UJ	R

Note:

8.0 Matrix Spike/Matrix Spike Duplicate (MS/MSD)

		Yes	No	NA
8.1	Is a Matrix Spike/Matrix Spike Duplicate recovery form present?	[✓]		
8.2	Are MS/MSDs analyzed at the required frequency for each matrix?	[✓]		
8.3	Are all MS/MSD %Rs and RPDs within acceptance criteria?	[ ]	✓	

No action is taken on MS/MSD data alone. If the recoveries are <10%, then J(+)/R(-) all associated field sample results.

Note: MS/MSD - F5D220349-001 (non-client sample) Bromomethane RPD=24% (<20%)
Chloroethane RPD=22%
Acetone MSD=403% RPD=21%.

9.0 Laboratory Control Sample (LCS)

		Yes	No	NA
9.1	Is an LCS recovery form present?	[✓]		
9.2	Is LCS analyzed at the required frequency for each matrix?	[✓]		
9.3	Are all LCS %Rs within acceptance criteria?	[✓]		

	> UCL	< LCL
Positive	J	J
Non-detect	None	R

Note: LCS (prep batch 5123229) All %Rs were in control.

10. Internal Standards

		Yes	No	NA
10.1	Are internal standard area of every sample and blank within upper and lower QC limits for each continuing calibration?	[ ]		✓

	Area > 200%	Area >25% but >50%	Area <25%
Positive	J	J	J
Non-detect	None	UJ	R

10.2	Are retention times of internal standards within 30 seconds of the associated calibration standard?	[ ]		✓

The chromatographic profile must be examined to determine if any false positives/negatives exist. For a large shift, the reviewer may consider partial or total rejection of the data. Positive results should be qualified as "R" if the mass spectral criteria are met.

Note:

11.0 TCL Quantitation and Reported Detection limits

		Yes	No	NA
11.1	Are reporting limits (RLs) used consistent with those specified in the QAPP?	[✓]		
11.2	Are these limits adjusted to reflect dilutions and/or percent solid as required?	[✓]		
11.3	Are any positive reported that exceed the linear range of the instrument? If yes, than flag "J".		[✓]	

Note: _____

12.0 Tentatively Identified Compounds (TICs)

		Yes	No	NA
12.1	Do any TICs display common laboratory contaminants? (carbon dioxide, siloxanes, hexane, aldo condensation products, solvent preservatives, or related byproducts). If yes, apply validation flag "R,w".		[✓]	
12.2	Do any blanks display TICs? If yes, and concentration in sample < 5X blank concentration, flag "U". If concentration is sample > 5X blank concentration, no action is taken - unless previously qualified as a common laboratory contaminant.	[✓]	[✓]	
12.3	For samples displaying TICs, is there a laboratory "NJ" flag? If no, manually add laboratory flag "NJ".		[✓]	
12.4	Apply validation flag of "NJ,t" to all TICs not previously qualified.			

Note: _____

13.0 Field Duplicate Samples

		Yes	No	NA
13.1	Were any field duplicates submitted for VOC analysis?	[ ]		✓
13.2	Were there any positive results detected in both samples? (If Yes, calculate RPD for both results greater than RL)	[ ]		✓
13.3	Were all RPD or absolute difference values within the control limits? If No, J(+)/UJ(-) or professional judgement.	[ ]		✓
	For sample results > 5 x RL, a control limit of 50% RPD for aqueous samples and 100% RPD for soil samples will be used.			
	For soil/aqueous sample results < 5 x RL, a control limit of 2 x RL will be used.			

Note: _____

14.0 Data Completeness

		Yes	No	NA
14.1	Is % completeness within the control limit? (Control limit: 95% for aqueous samples and 90% for soil samples)	[✓]		

14.1.1 Number of samples: 1

14.1.2 Number of target compounds in each analysis: 37

14.1.3 Number of results rejected and/or not reported: 0

% Completeness = (13.1.1 x 13.1.2 - 13.1.3) x 100/(13.1.1 x 13.1.2)

% Completeness = 100%

METHOD BLANK REPORT

GC/MS Volatiles

Client Lot #...: F5D300120 **Work Order #...:** G9PD41AA **Matrix.....:** WATER
MB Lot-Sample #: F5E030000-229

Prep Date.....: 05/02/05 **Analysis Time..:** 15:44
Analysis Date..: 05/02/05 **Prep Batch #...:** 5123229
Dilution Factor: 1

PARAMETER	RESULT	REPORTING LIMIT	UNITS	METHOD
Acetone	ND	2.0	ug/L	SW846 8260B
Benzene	ND	1.0	ug/L	SW846 8260B
Bromodichloromethane	ND	1.0	ug/L	SW846 8260B
Bromoform	ND	1.0	ug/L	SW846 8260B
Bromomethane	ND	2.0	ug/L	SW846 8260B
2-Butanone	ND	5.0	ug/L	SW846 8260B
Carbon disulfide	ND	1.0	ug/L	SW846 8260B
Carbon tetrachloride	ND	1.0	ug/L	SW846 8260B
Chlorobenzene	ND	1.0	ug/L	SW846 8260B
Dibromochloromethane	ND	1.0	ug/L	SW846 8260B
Chloroethane	ND	2.0	ug/L	SW846 8260B
Chloroform	ND	1.0	ug/L	SW846 8260B
Chloromethane	ND	2.0	ug/L	SW846 8260B
1,2-Dichlorobenzene	ND	1.0	ug/L	SW846 8260B
1,3-Dichlorobenzene	ND	1.0	ug/L	SW846 8260B
1,4-Dichlorobenzene	**0.14 J**	**1.0**	**ug/L**	**SW846 8260B**
1,1-Dichloroethane	ND	1.0	ug/L	SW846 8260B
1,2-Dichloroethane	ND	1.0	ug/L	SW846 8260B
1,1-Dichloroethene	ND	1.0	ug/L	SW846 8260B
cis-1,2-Dichloroethene	ND	1.0	ug/L	SW846 8260B
trans-1,2-Dichloroethene	ND	1.0	ug/L	SW846 8260B
1,2-Dichloropropane	ND	1.0	ug/L	SW846 8260B
cis-1,3-Dichloropropene	ND	1.0	ug/L	SW846 8260B
trans-1,3-Dichloropropene	ND	1.0	ug/L	SW846 8260B
Ethylbenzene	ND	1.0	ug/L	SW846 8260B
2-Hexanone	ND	5.0	ug/L	SW846 8260B
Methylene chloride	ND	1.0	ug/L	SW846 8260B
Styrene	ND	1.0	ug/L	SW846 8260B
1,1,2,2-Tetrachloroethane	ND	1.0	ug/L	SW846 8260B
Tetrachloroethene	ND	1.0	ug/L	SW846 8260B
Toluene	ND	1.0	ug/L	SW846 8260B
1,1,1-Trichloroethane	ND	1.0	ug/L	SW846 8260B
1,1,2-Trichloroethane	ND	1.0	ug/L	SW846 8260B
Trichloroethene	ND	1.0	ug/L	SW846 8260B
Vinyl chloride	ND	1.0	ug/L	SW846 8260B
Xylenes (total)	ND	1.0	ug/L	SW846 8260B
4-Methyl-2-pentanone (MIBK)	ND	5.0	ug/L	SW846 8260B

(Continued on next page)

non-client sample

MATRIX SPIKE SAMPLE EVALUATION REPORT

GC/MS Volatiles

Client Lot #...: F5D300120 **Work Order #...:** G81751AD-MS **Matrix.....:** WATER
MS Lot-Sample #: F5D220349-001 G81751AE-MSD
Date Sampled...: 04/20/05 **Date Received..:** 04/22/05
Prep Date.....: 05/02/05 **Analysis Date..:** 05/02/05
Prep Batch #...: 5123229 **Analysis Time..:** 17:41
Dilution Factor: 5

PARAMETER	PERCENT RECOVERY	RECOVERY LIMITS	RPD	RPD LIMITS	METHOD
cis-1,3-Dichloropropene	82	(69 - 141)			SW846 8260B
	82	(69 - 141)	0.48	(0-20)	SW846 8260B
Chloromethane	74	(30 - 141)			SW846 8260B
	89	(30 - 141)	19	(0-20)	SW846 8260B
Vinyl chloride	76	(39 - 147)			SW846 8260B
	88	(39 - 147)	15	(0-20)	SW846 8260B
Bromomethane	68	(30 - 144)			SW846 8260B
	87 p	(30 - 144)	24	(0-20)	SW846 8260B
Chloroethane	71	(50 - 150)			SW846 8260B
	89 p	(50 - 150)	22	(0-20)	SW846 8260B
Acetone	32	(30 - 150)			SW846 8260B
	403 a,p	(30 - 150)	21	(0-20)	SW846 8260B
1,1-Dichloroethene	87	(47 - 135)			SW846 8260B
	98	(47 - 135)	12	(0-20)	SW846 8260B
Methylene chloride	102	(38 - 150)			SW846 8260B
	117	(38 - 150)	13	(0-20)	SW846 8260B
Carbon disulfide	87	(32 - 150)			SW846 8260B
	93	(32 - 150)	7.0	(0-20)	SW846 8260B
1,1-Dichloroethane	96	(64 - 135)			SW846 8260B
	109	(64 - 135)	13	(0-20)	SW846 8260B
Chloroform	87	(67 - 129)			SW846 8260B
	99	(67 - 129)	13	(0-20)	SW846 8260B
1,1,1-Trichloroethane	94	(60 - 140)			SW846 8260B
	105	(60 - 140)	11	(0-20)	SW846 8260B
Carbon tetrachloride	95	(40 - 150)			SW846 8260B
	110	(40 - 150)	14	(0-20)	SW846 8260B
1,2-Dichloroethane	78	(65 - 140)			SW846 8260B
	88	(65 - 140)	12	(0-20)	SW846 8260B
Benzene	99	(73 - 132)			SW846 8260B
	111	(73 - 132)	11	(0-20)	SW846 8260B
Trichloroethene	96	(30 - 150)			SW846 8260B
	90	(30 - 150)	7.3	(0-20)	SW846 8260B
1,2-Dichloropropane	90	(70 - 137)			SW846 8260B
	89	(70 - 137)	1.6	(0-20)	SW846 8260B
Bromodichloromethane	76	(69 - 132)			SW846 8260B
	78	(69 - 132)	2.5	(0-20)	SW846 8260B
1,1,2-Trichloroethane	91	(72 - 130)			SW846 8260B
	89	(72 - 130)	2.9	(0-20)	SW846 8260B
trans-1,3-Dichloropropene	97	(76 - 150)			SW846 8260B
	95	(76 - 150)	2.1	(0-20)	SW846 8260B

(Continued on next page)

DATA VALIDATION WORKSHEET - Level III Review
SEMIVOLATILE ORGANIC ANALYSIS - REGION II for RCRA

Reviewer: TA
Date: 5/5/05
Lab: STL/ St. Louis

Project Name: GTE Hicksville
Project Number: 25595516
SDG No.: FSD300120

1.0 Chain of Custody/Sample Condition

1.1 Do Chain-of-Custody forms list all samples analyzed? [✓]
1.2 Are all Chain-of-Custody forms signed, indicating sample chain-of-custody was maintained? [✓]
1.3 Do the Traffic Reports, chain-of-custody, and lab narrative indicate any problems with sample receipt, condition of samples, analytical problems or special circumstances affecting the quality of the data? [✓]
1.4 Do sample preservation, collection and storage condition meet method requirement? [✓]
If samples were not on ice or the ice was melted upon arrival at the laboratory and the temperature of the cooler was elevated (> 10 °C), then flag all positive results with a "J" and all non-detects "UJ".
1.5 Is any sample analyzed as a soil, other than TCLP, contains 50% -90% water? If yes, J(+)/UJ(-). If a soil sample other than TCLP contains more than 90% water, all data should be qualified as unusable (R). [ ] ✓

Note:
Cooler Temp: 2°C

2.0 Holding Time — Yes / No / NA

2.1 Have any technical holding times, determined from sampling to date of analysis, been exceeded? (See attached Holding Time Table for sample holding time) If yes, J(+)/UJ(-). [✓]

Matrix	Extraction	Analysis
Aqueous	7 days	40 days
Soil/Sediment	7 days	40 days

2.2 Have any technical holding times grossly (twice the holding time) been exceeded? If yes, J(+)/R(-). [✓]

Note:

Date Collected	Date ~~Analyzed~~ Prep.	H.T	Date Analyzed	H.T
4/29/05	5/3/05	4 days	5/4/05	1 day

3.0 GC/MS Instrument Performance Check (IPC) — Yes / No / NA

3.1 Are GC/MS Tuning and Mass Calibration forms present for DFTPP? [ ] ✓
3.2 Have all samples been analyzed within twelve hours of the tune? [ ] ✓
If twelve hours have elapsed according to the system clock, and the laboratory had analyzed standards, blanks, field samples or QC samples after twelve (12) hours, the data for the affected standards, blanks, field samples or QC samples are rejected "R".
3.3 Have ion abundance criteria for DFTPP been met for each instrument used? [ ] ✓

Note:

4.0 Blanks (Method Blanks, Field Blanks and Trip Blanks)

		Yes	No	NA
4.1	Is a Method Blank Summary form present for each matrix, each GC/MS system used to analyze volatile samples and each extraction batch (medium level soil)?	✓		
4.2	Has a method blank been analyzed for each set of samples or every 20 samples of similar matrix, (water, low soil, medium soil) whichever is more frequent?	✓		
4.3	Do any method/instrument/reagent blanks have positive results (TCL, and/or TIC)?		✓	
4.4	Do any field/trip rinse/equipment blanks have positive results (TCL, and/or TIC)?			✓
4.5	Are there field/trip/rinse/equipment blanks associated with every sample?			✓
	Apply the 5X or 10X (for phthalate-esters) rule per the Region II Guidelines			

Note: MB. prep. batch Hexachloroethane 4.1 ug/L — ND
5123396 Two TICs unknown (RT=8.1627) → U.z. 4.2 ug/L
unknown (RT=17.998) — ND 7.0 ug/L.

5.0 GC/MS Initial Calibration

		Yes	No	NA
5.1	Are Initial Calibration summary forms present and complete for each instrument used?			✓
5.2	Are calibrations linear over the concentration range of the calibration applying either %RSD <15% or R >0.995? Non-linear: J(+)/UJ(-) or %RSD > 90% J(+)/R(-).			✓
5.3	Do any compounds have an RRF < 0.05? If yes, J(+)/R(-) or professional judgement.			✓

Note:

6.0 Continuing Calibration

		Yes	No	NA
6.1	Are Continuing Calibration summary forms present and complete for each instrument used?			✓
6.2	Has a continuing calibration standard been analyzed for every 12 hours of sample analysis per instrument?			✓
6.3	Do any compounds have a % drift (%D) values between initial and continuing calibration RRF outside QC limits (%D < 20%)? If yes, J(+)/UJ(-) or %D > 90% J(+)/R(-). If %D is >20% but <90% with positive bias, J(+) only; if %D is >20% and <90% with negative bias, J(+)/UJ(-)			✓
6.4	Do any continuing standard compounds have a RRF < 0.05? If yes, J(+)/R(-) or professional judgement.			✓

Note:

7.0 Surrogate Recovery

		Yes	No	NA
7.1	Are all samples listed on the appropriate Surrogate Recovery Summary Form ?	✓		
7.2	Are surrogate recoveries within acceptance criteria for all samples and method blanks? Note that acids and base/neutrals are assessed separately.	✓		
7.3	If No in Section 7.2, are these sample(s) or method blank(s) reanalyzed?			✓
7.4	If No in Section 7.3, is any sample dilution factor greater than 10? (Surrogate recoveries may be diluted out.)			✓

Note: If SMC recoveries do not meet acceptable criteria in the MS/MSD and diluted samples, then no reanalysis is required.

	> UCL	25% to LCL	< 25%
Positive	J	J	J
Non-detect	None	UJ	R

Note:

8.0 Matrix Spike/Matrix Spike Duplicate (MS/MSD)

		Yes	No	NA
8.1	Is a Matrix Spike/Matrix Spike Duplicate recovery form present?			✓
8.2	Are MS/MSDs analyzed at the required frequency for each matrix?			✓
8.3	Are all MS/MSD %Rs and RPDs within acceptance criteria?			✓

No action is taken on MS/MSD data alone. If the recoveries are <10%, then J(+)/R(-) all associated field sample results.

Note:

9.0 Laboratory Control Sample (LCS)

		Yes	No	NA
9.1	Is an LCS recovery form present?	✓		
9.2	Is LCS analyzed at the required frequency for each matrix?	✓		
9.3	Are all LCS %Rs within acceptance criteria?		✓	

	> UCL	< LCL
Positive	J	J
Non-detect	None	R

Note: LCS (prep. batch 5123396) Hexachloroethane RPD = 21% Hexachlorobutadiene RPD = 23%. Hexachlorocyclopentadiene RPD = 26%) All UD in associated sample, ok

10. Internal Standards

		Yes	No	NA
10.1	Are internal standard area of every sample and blank within upper and lower QC limits for each continuing calibration?			✓
10.2	Are retention times of internal standards within 30 seconds of the associated calibration standard?			✓

	Area > 200%	Area >25% but >50%	Area <25%
Positive	J	J	J
Non-detect	None	UJ	R

The chromatographic profile must be examined to determine if any false positives/negatives exist. For a large shift, the reviewer may consider partial or total rejection of the data. Positive results should be qualified as "R" if the mass spectral criteria are met.

Note:

11.0 TCL Quantitation and Reported Detection limits

		Yes	No	NA
11.1	Are reporting limits (RLs) used consistent with those specified in the QAPP?	[✓]		
11.2	Are these limits adjusted to reflect dilutions and/or percent solid as required?	[✓]		
11.3	Are any positive reported that exceed the linear range of the instrument? If yes, than flag "J".	[ ]	✓	

Note: _____

12.0 Tentatively Identified Compounds (TICs)

		Yes	No	NA
12.1	Are TIC ions greater than ten percent in the reference spectrum also present in the sample spectrum?	[ ]		✓
12.2	Do any TICs display common laboratory contaminants? (carbon dioxide, siloxanes, hexane, aldo condensation products, solvent preservatives, or related byproducts). If yes, apply validation flag "R,w".		[✓]	
12.3	Do any blanks display TICs? If yes, and concentration in sample < 5X blank concentration, flag "U". If concentration is sample > 5X blank concentration, no action is taken - unless previously qualified as a common laboratory contaminant.	✓	[ ]	
12.4	For samples displaying TICs, is there a laboratory "NJ" flag? If no, manually add laboratory flag "NJ".		[✓]	
12.5	Apply validation flag of "NJ,t" to all TICs not previously qualified.			

Note: _____

13.0 Percent Completeness

13.1	Is % completeness within the control limit? (95% for aqueous samples and 90% for soil samples)	[✓]		

13.1.1 Number of samples: 1

13.1.2 Number of target compounds in each analysis: _____

13.1.3 Number of results rejected and/or not reported: 0

% Completeness = (13.1.1 x 13.1.2 - 13.1.3) x 100/(13.1.1 x 13.1.2)

% Completeness = 100%

METHOD BLANK REPORT

GC/MS Semivolatiles

Client Lot #...: F5D300120 **Work Order #...:** G9P9C1AA **Matrix.....:** WATER
MB Lot-Sample #: F5E030000-396
Prep Date.....: 05/03/05 **Analysis Time..:** 10:59
Analysis Date..: 05/04/05 **Prep Batch #...:** 5123396
Dilution Factor: 1

PARAMETER	RESULT	REPORTING LIMIT	UNITS	METHOD
Phenol	ND	10	ug/L	SW846 8270C
bis(2-Chloroethyl)-ether	ND	10	ug/L	SW846 8270C
2-Chlorophenol	ND	10	ug/L	SW846 8270C
1,3-Dichlorobenzene	ND	10	ug/L	SW846 8270C
1,4-Dichlorobenzene	ND	10	ug/L	SW846 8270C
1,2-Dichlorobenzene	ND	10	ug/L	SW846 8270C
2-Methylphenol	ND	10	ug/L	SW846 8270C
2,2'-oxybis(1-Chloropropa	ND	10	ug/L	SW846 8270C
4-Methylphenol	ND	20	ug/L	SW846 8270C
N-Nitrosodi-n-propyl-amine	ND	10	ug/L	SW846 8270C
Hexachloroethane	**4.1 J**	**10**	**ug/L**	**SW846 8270C**
Nitrobenzene	ND	10	ug/L	SW846 8270C
Isophorone	ND	10	ug/L	SW846 8270C
2-Nitrophenol	ND	10	ug/L	SW846 8270C
2,4-Dimethylphenol	ND	10	ug/L	SW846 8270C
bis(2-Chloroethoxy) methane	ND	10	ug/L	SW846 8270C
2,4-Dichlorophenol	ND	10	ug/L	SW846 8270C
1,2,4-Trichloro-benzene	ND	10	ug/L	SW846 8270C
Naphthalene	ND	10	ug/L	SW846 8270C
4-Chloroaniline	ND	10	ug/L	SW846 8270C
Hexachlorobutadiene	ND	10	ug/L	SW846 8270C
4-Chloro-3-methylphenol	ND	10	ug/L	SW846 8270C
2-Methylnaphthalene	ND	10	ug/L	SW846 8270C
Hexachlorocyclopenta-diene	ND	50	ug/L	SW846 8270C
2,4,6-Trichloro-phenol	ND	10	ug/L	SW846 8270C
2,4,5-Trichloro-phenol	ND	10	ug/L	SW846 8270C
2-Chloronaphthalene	ND	10	ug/L	SW846 8270C
2-Nitroaniline	ND	50	ug/L	SW846 8270C
Dimethyl phthalate	ND	10	ug/L	SW846 8270C
Acenaphthylene	ND	10	ug/L	SW846 8270C
2,6-Dinitrotoluene	ND	10	ug/L	SW846 8270C
3-Nitroaniline	ND	50	ug/L	SW846 8270C
Acenaphthene	ND	10	ug/L	SW846 8270C
2,4-Dinitrophenol	ND	50	ug/L	SW846 8270C

(Continued on next page)

GTE OPERATIONS SUPPORT INCORPORATED

Method Blank Report

GC/MS Semivolatiles

Lot-Sample #: F5E030000-396 B **Work Order #:** G9P9C1AA **Matrix:** WATER

MASS SPECTROMETER/DATA SYSTEM (MSDS) TENTATIVELY IDENTIFIED COMPOUNDS

PARAMETER	CAS #	ESTIMATED RESULT		RETENTION TIME	UNITS
Unknown		4.2	M	9.1627	ug/L
Unknown		7.0	M	17.998	ug/L

NOTE(S):

M: Result was measured against nearest internal standard assuming a response factor of 1.

LABORATORY CONTROL SAMPLE EVALUATION REPORT

GC/MS Semivolatiles

Client Lot #...: F5D300120 **Work Order #...:** G9P9C1AC-LCS **Matrix.....:** WATER
LCS Lot-Sample#: F5E030000-396 G9P9C1AD-LCSD
Prep Date.....: 05/03/05 **Analysis Date..:** 05/04/05
Prep Batch #...: 5123396 **Analysis Time..:** 11:31
Dilution Factor: 1

PARAMETER	PERCENT RECOVERY	RECOVERY LIMITS	RPD	RPD LIMITS	METHOD
Phenol	23	(18 - 40)			SW846 8270C
	27	(18 - 40)	16	(0-20)	SW846 8270C
bis(2-Chloroethyl)-ether	51	(35 - 92)			SW846 8270C
	59	(35 - 92)	14	(0-20)	SW846 8270C
2-Chlorophenol	47	(40 - 84)			SW846 8270C
	54	(40 - 84)	14	(0-20)	SW846 8270C
2-Methylphenol	43	(36 - 78)			SW846 8270C
	48	(36 - 78)	12	(0-20)	SW846 8270C
2,2'-oxybis(1-Chloropropan	53	(41 - 99)			SW846 8270C
	63	(41 - 99)	16	(0-20)	SW846 8270C
N-Nitrosodi-n-propyl-amine	62	(52 - 108)			SW846 8270C
	70	(52 - 108)	12	(0-20)	SW846 8270C
Hexachloroethane	41	(30 - 79)			SW846 8270C
	51 p	(30 - 79)	21	(0-20)	SW846 8270C
Nitrobenzene	54	(46 - 97)			SW846 8270C
	61	(46 - 97)	13	(0-20)	SW846 8270C
Isophorone	62	(54 - 106)			SW846 8270C
	69	(54 - 106)	12	(0-20)	SW846 8270C
2-Nitrophenol	52	(45 - 95)			SW846 8270C
	59	(45 - 95)	13	(0-20)	SW846 8270C
2,4-Dimethylphenol	50	(44 - 90)			SW846 8270C
	57	(44 - 90)	12	(0-20)	SW846 8270C
bis(2-Chloroethoxy) methane	55	(48 - 99)			SW846 8270C
	62	(48 - 99)	13	(0-20)	SW846 8270C
2,4-Dichlorophenol	51	(45 - 94)			SW846 8270C
	58	(45 - 94)	12	(0-20)	SW846 8270C
1,2,4-Trichloro-benzene	40	(38 - 84)			SW846 8270C
	48	(38 - 84)	20	(0-20)	SW846 8270C
Naphthalene	46	(45 - 91)			SW846 8270C
	54	(45 - 91)	17	(0-20)	SW846 8270C
4-Chloroaniline	52	(31 - 126)			SW846 8270C
	59	(31 - 126)	12	(0-20)	SW846 8270C

(Continued on next page)

LABORATORY CONTROL SAMPLE EVALUATION REPORT

GC/MS Semivolatiles

Client Lot #...: F5D300120 **Work Order #...:** G9P9C1AC-LCS **Matrix.....:** WATER
LCS Lot-Sample#: F5E030000-396 G9P9C1AD-LCSD

PARAMETER	PERCENT RECOVERY	RECOVERY LIMITS	RPD	RPD LIMITS	METHOD
Hexachlorobutadiene	34	(32 - 78)			SW846 8270C
	43 p	(32 - 78)	23	(0-20)	SW846 8270C
4-Chloro-3-methylphenol	55	(51 - 93)			SW846 8270C
	61	(51 - 93)	11	(0-20)	SW846 8270C
2-Methylnaphthalene	46	(28 - 110)			SW846 8270C
	54	(28 - 110)	17	(0-20)	SW846 8270C
Hexachlorocyclopenta-diene	39	(14 - 89)			SW846 8270C
	51 p	(14 - 89)	26	(0-20)	SW846 8270C
2,4,6-Trichloro-phenol	57	(48 - 97)			SW846 8270C
	64	(48 - 97)	12	(0-20)	SW846 8270C
2,4,5-Trichloro-phenol	58	(49 - 99)			SW846 8270C
	65	(49 - 99)	12	(0-20)	SW846 8270C
2-Nitroaniline	63	(52 - 110)			SW846 8270C
	71	(52 - 110)	11	(0-20)	SW846 8270C
Dimethyl phthalate	64	(58 - 102)			SW846 8270C
	70	(58 - 102)	9.2	(0-20)	SW846 8270C
Acenaphthylene	58	(52 - 100)			SW846 8270C
	66	(52 - 100)	13	(0-20)	SW846 8270C
2,6-Dinitrotoluene	65	(60 - 104)			SW846 8270C
	71	(60 - 104)	8.4	(0-20)	SW846 8270C
3-Nitroaniline	63	(51 - 115)			SW846 8270C
	69	(51 - 115)	10	(0-20)	SW846 8270C
Acenaphthene	55	(53 - 100)			SW846 8270C
	63	(53 - 100)	14	(0-20)	SW846 8270C
2,4-Dinitrophenol	55	(24 - 118)			SW846 8270C
	63	(24 - 118)	13	(0-20)	SW846 8270C
4-Nitrophenol	25	(17 - 45)			SW846 8270C
	28	(17 - 45)	8.5	(0-20)	SW846 8270C
Dibenzofuran	57	(49 - 102)			SW846 8270C
	64	(49 - 102)	12	(0-20)	SW846 8270C
2,4-Dinitrotoluene	68	(65 - 113)			SW846 8270C
	75	(65 - 113)	8.6	(0-20)	SW846 8270C
Diethyl phthalate	68	(50 - 106)			SW846 8270C
	74	(50 - 106)	8.8	(0-20)	SW846 8270C
Fluorene	61	(58 - 101)			SW846 8270C
	67	(58 - 101)	9.9	(0-20)	SW846 8270C

(Continued on next page)

DATA VALIDATION WORKSHEET - Level III/IV Review
INORGANIC - ICP, GFAA, CVAA, and Cyanide - RegionII for RCRA

SDG No.: FSD300120
Lab: STL St. Louis

Project Name: GTE OSI
Reviewer: TA
Date: 5/5/05

1.0 Chain of Custody/Sample Condition/Raw Data

		ICP			GFAA			CVAA-Hg			Cyanide		
		Yes	No	NA	Yes	No	NA	Yes	No	NA	Yes	No	NA
1.1	Do Chain-of-Custody forms list all samples that were analyzed?	✓											
1.2	Are all Chain-of-Custody forms signed, indicating sample chain-of-custody was maintained?	✓											
1.3	Do the traffic Reports, chain-of-custody, and lab narrative indicate any problems with sample receipt, condition of samples, analytical problems or special circumstances affecting the quality of the data?		✓										
1.4	Does sample preservation, collection and storage meet method requirement? water samples: with nitric acid to pH < 2 (for metals) or pH>12 (for cyanide), and soil/sediment samples: (4 °C ± 2 °C)	✓											
1.5	Are the digestion logs present and complete with pH values, sample weights, dilutions, final volumes. % solids (for soil samples), and preparation dates? For any missing or incomplete documentation, contact the laboratory for explanation/resubmittal.	✓											
1.6	Is any sample analyzed as a soil, other than TCLP, contains 50% -90% water? If yes, J(+)/UJ(-). If a soil sample other than TCLP contains more than 90% water, all data should be qualified as unusable (R).			✓									

Note:

2.0 Holding Time

		ICP			GFAA			CVAA-Hg			Cyanide		
		Yes	No	NA	Yes	No	NA	Yes	No	NA	Yes	No	NA
2.1	Have any technical holding times, determined from date of collection to date of analysis, been exceeded? (Hg: 28days, other metals: 6 months; cyanide: 14 days) Action: J(+)/UJ(-). If the holding times are grossly exceeded (twice the holding time criteria), J(+)/R(-).		✓										

Note:

	Date Collected	Date Analyzed.	H.T
ICP metal	4/29/05	5/4/05	5 days
pH		5/2/05	3 days — J.h

3.0 Method Detection Limits (MDL)

		ICP			GFAA			CVAA-Hg			Cyanide		
		Yes	No	NA	Yes	No	NA	Yes	No	NA	Yes	No	NA
3.1	Are all IDL equal to or less than the reporting limits or CRDL specified?	✓											
3.2	Were all results and detection limits for solid matrix samples reported on a dry-weight basis?	✓											
3.3	Were all dilution reflected in the positive detections and detection limits?	✓											
3.4	Was the MSA used when the serial dilution or matrix spike displayed unacceptable results?			✓									

Note:

4.0 Instrument Calibration

		ICP			GFAA			CVAA-Hg			Cyanide		
		Yes	No	NA	Yes	No	NA	Yes	No	NA	Yes	No	NA
4.1	Are sufficient standards included in the calibration curve? (ICP/ICP-MS: blank + one standard; GFAA: blank + three standards; CVAA: blank + five standards)			✓									
4.2	Are the correlation coefficients > 0.995? (for GFAA and CVAA) Action: J(+)/UJ(-).												
4.3	Was an initial calibration verification (ICV) analyzed at the beginning of each analysis? Action: If no, use professional judgment to determine affect on the data and note in reviewer narrative.			✓									
4.4	Was continuing calibration verification (CCV) performed every 10 analysis or every 2 hours, whichever is more frequent? Action: If no, use professional judgment to determine affect on the data and note in reviewer narrative.			✓									
4.5	Are all calibration standard percent recoveries (ICV and CCV) within the control limits? Mercury (80%-120%), other Metals (90%-110%), and cyanides (85%-115%). Qualify five samples on either side of CCV standard out of control limit.			✓									
4.6	Was the CRI (2xCRDL) analyzed at the beginning of the sequence and at every eight hours or less? CRI for Al, Ba, Ca, Fe, Mg, Na, or K is not required. The affected range is True Value +/- 2 CRDL.			✓									
4.7	Was the CRA (CRDL) run after the ICV at the beginning of the run? The affected range is true value +/- CRDL.												
4.8	Was the Cyanide standard (0.5xCRDL) run after the ICV at the beginning of the run? The affected range is true value +/- 0.5x CRDL.												
	Region II use 80 - 120% as acceptance limit. J(+)/UJ(-) on results within the affected range if the recovery within 50% to 79%. R(+/-) on data within the affected range if the recovery less than 50%. J(+) on data within affected range if recovery is between 121% and 150%. R(+) on data within affected range if recovery greater than 150%.												

Action:

	R(+/-)	J(+)/UJ(-)	J(+)	R(+)
Mercury	< 64%	65% - 79%	121% - 135%	> 136%
Other Metals	< 74%	75% - 89%	111% - 125%	> 126%
Cyanide	<69%	70% - 84%	116% - 130%	> 131%

Note: _____

5.0 Blanks

		ICP			GFAA			CVAA-Hg			Cyanide		
		Yes	No	NA	Yes	No	NA	Yes	No	NA	Yes	No	NA
5.1	Were preparation blank (PB) prepared at the appropriate frequency (one per 20 samples, per batch, per matrix and per level)? If no, flag as estimated "J" all the associated positive data < 10x IDLs for which prep. blank was not analyzed.	✓											
5.2	Are there reported PB values > ± CRDL (when CRDL>IDL) or 2XIDL (when IDL>CDRL)? Action: If yes, reject all associated positive data but less than ten times the prep. blank value.		✓										
5.3	Were initial calibration blanks (ICB) and continuing calibration blanks (CCBs) analyzed at the correct frequency? Action: If no, prepare telephone record log, contact laboratory and write in the Contract-Problems/Non-Compliance section of the "Data Assessment Narrative".use professional judgment to determine affect on the data note in reviewer narrative.	✓											
5.4	Are there reported ICB or CCB values > ± CRDL (when CRDL>IDL) or 2x IDL (when IDL > CRDL)? Action: If yes, flag as estimated "J" positive sample results when raw sample value is less than or equal to calibration blank value analyzed between calibration blank with value over CRDL (or 2x IDL) and nearest good calibration blank. Flag five samples on either side of the calibration blank outside the control limits.		✓										

		ICP			GFAA			CVAA-Hg			Cyanide		
		Yes	No	NA	Yes	No	NA	Yes	No	NA	Yes	No	NA
5.5	Are there samples with concentrations less than the calibration blank concentration in associated blanks? Action: If yes, J(+). Flag five samples on either side of the calibration blank outside the control limits.			✓									
5.6	Are there samples with non-detect results or with concentrations less than 10x the CRDL (for negative prep blank conc.) in associated blanks? Action; If yes, R(+/-).			✓									
5.7	Are there reported field blank or equipment blank values > ± CRDL or 2x IDL? Action: If yes, reject (except field blank results) all associated positive sample data less than or equal to five times the field blank value.			✓									

Note: PB. Al 43.9 ug/L
Ba 0.39 ug/L
Ca 28.7 ug/L
Zn 3.8 ug/L
All < RL ok. These results ~~were~~ in Decon Water were greater than 5X blank conc. OK.

6.0 ICP Interference Check Sample (ICS)

		ICP			GFAA			CVAA-Hg			Cyanide		
		Yes	No	NA	Yes	No	NA	Yes	No	NA	Yes	No	NA
6.1	Was ICSA and ICSAB analyzed at beginning and end of each ICP run (or at least twice every 8 hours), and at the beginning or once every 8 hours (whichever is more frequent) for ICP-MS?			✓									
6.2	Are the ICS AB recoveries within 80% - 120%?			✓									
6.3	If not, are the associated sample Al, Ca, Fe, and Mg concentrations less than the level in the ICS?			✓									

Action: Spiked analytes (ICS AB analytes)

< 49%	50% - 79%	121% - 150%	> 151%
R(+/-)	J(+)/UJ(-)	J(+)	R(+)

Note:

7.0 Laboratory Control Sample (LCS)

		ICP			GFAA			CVAA-Hg			Cyanide		
		Yes	No	NA	Yes	No	NA	Yes	No	NA	Yes	No	NA
7.1	Was an LCS prepared and analyzed at the correct frequency (one per 20 samples, per batch, per matrix and per level)? Action: If no, J(+) any sample not associated with LCS results.	✓											
7.2	Is any LCS recovery outside the control limits? Aqueous and TCLP limits: 80 - 120%; Soil limits: use lab limits.		✓										

Action:

Aqueous/TCLP				Soil	
< 50%	50% - 79%	121% - 150%	> 150%	< LCL	>UCL
R(+/-)	J(+)/UJ(-)	J(+)	R(+)	J(+)/UJ(-)	J(+)

Note: LCS (prep. batch 412393) All %Rs were ok
LCS pH %R=100%

8.0 Laboratory Duplicates

		ICP			GFAA			CVAA-Hg			Cyanide		
		Yes	No	NA	Yes	No	NA	Yes	No	NA	Yes	No	NA
8.1	Were Laboratory duplicates prepared and analyzed at the correct frequency (one per 20 samples, per batch, per matrix and per level)? Action: If no, J(+), with professional judgment, analytes not associated with Duplicate results.			✓									
8.2	Was a field blank used for the duplicate analysis? Action: If yes, J(+) with professional judgment. Note in worksheet.			✓									
8.3	Are all analyte duplicate results within control? (RPD values < 20% or difference < ± CRDL or IDL (if IDL>CRDL) for aqueous, and RPD < 35% or difference < ± 2 X CRDL (or 2x IDL) for solids)? Action: If no, noted in "Data Assessment Narrative". J(+) if RPD > 50% for aqueous samples or 100% for soil samples. Note: RPD criteria is used when both sample and duplicate results are > 5 X CRDL.			✓									

Note: Decon Water
pH 7.6/7.7 RPD=1.0 [illegible]

9.0 Spike Sample Analysis -Pre-Digestion

		ICP			GFAA			CVAA-Hg			Cyanide		
		Yes	No	NA	Yes	No	NA	Yes	No	NA	Yes	No	NA
9.1	Was a spiked sample prepared and analyzed at the correct frequency (one per 20 samples, per batch, per matrix and per level)? Action: If no, J(+) for all positive data less than 4 times the spiking levels.	✓											
9.2	Was a field blank used for the MS analysis? Action: If yes, J(+) with professional judgment. Note in worksheet. Note: Matrix spike analysis may be performed on a field blank when it is the only aqueous sample in an SDG.		✓										
9.3	For all analytes with sample concentration < 4 x spike concentration, are spike recoveries within the control limit of 75 125%? (No control limit applies to analytes with concentration > 4 x spike concentration.)	✓											

Water	%R>150%	126% < %R < 150%	30% < %R < 74%	%R < 30%
Positive	R	J	J	J
Non-detect	None	None	UJ	R
Soil	%R>200%	126% < %R < 200%	10% < %R < 74%	%R < 10%
Positive	R	J	J	J
Non-detect	None	None	UJ	R

Note: MS/MSD - FSD300120-001 Al 270%/251% spike level: 2000 ug/L
Decon Water. Fe —/75% 1000 ug/L

sample results > 4X spiking conc. [illegible]

10.0 ICP Serial Dilutions

		ICP			GFAA			CVAA-Hg			Cyanide		
		Yes	No	NA	Yes	No	NA	Yes	No	NA	Yes	No	NA
10.1	Were serial dilutions performed? If no, J(+) for all the positive data ≥ 10x IDL (or CRDL when 10x IDL ≤ CRDL).			✓									
10.2	Was a five-fold dilution performed?			✓									
10.3	Did the serial dilution results agree within 10% for analyte concentration > 50 x the IDL in the original sample? If no, J(+) on all the associated sample data ≥ 10x IDLs (or ≥ CRDL when 10x IDL ≤ CRDL). Reject all the associated sample results ≥ 10x IDL (or ≥ CRDL when 10x IDL ≤ CRDL) for which %D ≥ 100%.			✓									

Note:

11.0 Field Duplicate Samples

		ICP			GFAA			CVAA-Hg			Cyanide		
		Yes	No	NA	Yes	No	NA	Yes	No	NA	Yes	No	NA
11.1	Were any field duplicates submitted for metal analysis?			✓									
11.2	Were there any positive results detected in both samples? (If Yes, calculate RPD or difference for both results greater than RL)			✓									
11.3	Are all analyte duplicate results within control limits? If no, J(+)/UJ(-) or professional judgement.			✓									
	For sample results > 5 x CRDL (or the RL), a control limit of 50% RPD for aqueous samples and 100% RPD for soil samples will be used. For soil/aqueous sample results < 5 x CRDL (or RL), a control limit of 2 x CRDL (or RL) will be used.												

Note: _____

12.0 Data Completeness

		ICP			GFAA			CVAA-Hg			Cyanide		
		Yes	No	NA	Yes	No	NA	Yes	No	NA	Yes	No	NA
12.1	Is % completeness within the control limit? (Control limit: 95% for aqueous samples and 90% for soil samples)	✓											
12.1.1	Number of samples: 1												
12.1.2	Number of target compounds in each analysis: _____												
12.1.3	Number of results rejected and/or not reported: 0												
	% Completeness = (12.1.1 x 12.1.2 - 12.1.3) x 100/(12.1.1 x 12.1.2)												
	% Completeness = 100%												

Note: _____

METHOD BLANK REPORT

TOTAL Metals

Client Lot #...: F5D300120 **Matrix.....: WATER**

PARAMETER	RESULT	REPORTING LIMIT	UNITS	METHOD	PREPARATION-ANALYSIS DATE	WORK ORDER #
MB Lot-Sample #: F5E030000-437 Prep Batch #...: 5123437						
Aluminum	**43.9 B**	**200**	**ug/L**	**SW846 6010B**	**05/03-05/04/05**	**G9QD51AG**
		Dilution Factor: 1				
		Analysis Time..: 13:41				
Antimony	ND B	10	ug/L	SW846 6010B	05/03-05/04/05	G9QD51AX
		Dilution Factor: 1				
		Analysis Time..: 13:41				
Barium	**0.39 B**	**200**	**ug/L**	**SW846 6010B**	**05/03-05/04/05**	**G9QD51AH**
		Dilution Factor: 1				
		Analysis Time..: 13:41				
Beryllium	ND	5	ug/L	SW846 6010B	05/03-05/04/05	G9QD51AJ
		Dilution Factor: 1				
		Analysis Time..: 13:41				
Cadmium	ND	5	ug/L	SW846 6010B	05/03-05/04/05	G9QD51AL
		Dilution Factor: 1				
		Analysis Time..: 13:41				
Calcium	**28.7 B**	**5000**	**ug/L**	**SW846 6010B**	**05/03-05/04/05**	**G9QD51AK**
		Dilution Factor: 1				
		Analysis Time..: 13:41				
Chromium	ND	10	ug/L	SW846 6010B	05/03-05/04/05	G9QD51AN
		Dilution Factor: 1				
		Analysis Time..: 13:41				
Cobalt	ND	50	ug/L	SW846 6010B	05/03-05/04/05	G9QD51AM
		Dilution Factor: 1				
		Analysis Time..: 13:41				
Copper	ND	25	ug/L	SW846 6010B	05/03-05/04/05	G9QD51AP
		Dilution Factor: 1				
		Analysis Time..: 13:41				
Iron	ND	100	ug/L	SW846 6010B	05/03-05/04/05	G9QD51AQ
		Dilution Factor: 1				
		Analysis Time..: 09:50				
Magnesium	ND	5000	ug/L	SW846 6010B	05/03-05/04/05	G9QD51AT
		Dilution Factor: 1				
		Analysis Time..: 13:41				

(Continued on next page)

METHOD BLANK REPORT

TOTAL Metals

Client Lot #...: F5D300120 **Matrix.....:** WATER

PARAMETER	RESULT	REPORTING LIMIT	UNITS	METHOD	PREPARATION-ANALYSIS DATE	WORK ORDER #
Manganese	ND	15	ug/L	SW846 6010B	05/03-05/04/05	G9QD51AU
		Dilution Factor: 1				
		Analysis Time..: 13:41				
Nickel	ND	40	ug/L	SW846 6010B	05/03-05/04/05	G9QD51AW
		Dilution Factor: 1				
		Analysis Time..: 13:41				
Potassium	ND	5000	ug/L	SW846 6010B	05/03-05/04/05	G9QD51AR
		Dilution Factor: 1				
		Analysis Time..: 09:50				
Silver	ND	10	ug/L	SW846 6010B	05/03-05/04/05	G9QD51AF
		Dilution Factor: 1				
		Analysis Time..: 13:41				
Sodium	ND	5000	ug/L	SW846 6010B	05/03-05/04/05	G9QD51AV
		Dilution Factor: 1				
		Analysis Time..: 09:50				
Vanadium	ND	50	ug/L	SW846 6010B	05/03-05/04/05	G9QD51A0
		Dilution Factor: 1				
		Analysis Time..: 13:41				
Zinc	**3.8 B**	**20**	**ug/L**	**SW846 6010B**	**05/03-05/04/05**	**G9QD51A1**
		Dilution Factor: 1				
		Analysis Time..: 09:50				
Arsenic	ND B	10	ug/L	SW846 6010B	05/03-05/04/05	G9QD51AA
		Dilution Factor: 1				
		Analysis Time..: 13:41				
Lead	ND	10	ug/L	SW846 6010B	05/03-05/04/05	G9QD51AC
		Dilution Factor: 1				
		Analysis Time..: 13:41				
Selenium	ND B	15	ug/L	SW846 6010B	05/03-05/04/05	G9QD51AD
		Dilution Factor: 1				
		Analysis Time..: 13:41				
Thallium	ND	10	ug/L	SW846 6010B	05/03-05/04/05	G9QD51AE
		Dilution Factor: 1				
		Analysis Time..: 13:41				

NOTE(S):

Calculations are performed before rounding to avoid round-off errors in calculated results.

B Estimated result. Result is less than RL.

Decon Water

MATRIX SPIKE SAMPLE EVALUATION REPORT

TOTAL Metals

Client Lot #...: F5D300120 **Matrix.....:** WATER
Date Sampled...: 04/29/05 09:45 **Date Received..:** 04/30/05

PARAMETER	PERCENT RECOVERY	RECOVERY LIMITS	RPD	RPD LIMITS	METHOD	PREPARATION-ANALYSIS DATE	WORK ORDER #
MS Lot-Sample #: F5D300120-001 **Prep Batch #...:** 5123437							
Aluminum	270 N	(75 - 125)			SW846 6010B	05/03-05/04/05	G9KND1CU
	251 N	(75 - 125)	2.3	(0-20)	SW846 6010B	05/03-05/04/05	G9KND1CV
		Dilution Factor: 1					
		Analysis Time..: 13:54					
Antimony	99	(75 - 125)			SW846 6010B	05/03-05/04/05	G9KND1DR
	97	(75 - 125)	1.9	(0-20)	SW846 6010B	05/03-05/04/05	G9KND1DT
		Dilution Factor: 1					
		Analysis Time..: 13:54					
Barium	107	(75 - 125)			SW846 6010B	05/03-05/04/05	G9KND1CW
	105	(75 - 125)	2.0	(0-20)	SW846 6010B	05/03-05/04/05	G9KND1CX
		Dilution Factor: 1					
		Analysis Time..: 13:54					
Beryllium	103	(75 - 125)			SW846 6010B	05/03-05/04/05	G9KND1C0
	102	(75 - 125)	1.7	(0-20)	SW846 6010B	05/03-05/04/05	G9KND1C1
		Dilution Factor: 1					
		Analysis Time..: 13:54					
Cadmium	98	(75 - 116)			SW846 6010B	05/03-05/04/05	G9KND1C4
	96	(75 - 116)	2.8	(0-125)	SW846 6010B	05/03-05/04/05	G9KND1C5
		Dilution Factor: 1					
		Analysis Time..: 13:54					
Calcium	101	(75 - 125)			SW846 6010B	05/03-05/04/05	G9KND1C2
	98	(75 - 125)	2.3	(0-20)	SW846 6010B	05/03-05/04/05	G9KND1C3
		Dilution Factor: 1					
		Analysis Time..: 13:54					
Chromium	100	(75 - 125)			SW846 6010B	05/03-05/04/05	G9KND1C8
	98	(75 - 125)	2.4	(0-20)	SW846 6010B	05/03-05/04/05	G9KND1C9
		Dilution Factor: 1					
		Analysis Time..: 13:54					
Cobalt	98	(75 - 125)			SW846 6010B	05/03-05/04/05	G9KND1C6
	96	(75 - 125)	2.0	(0-20)	SW846 6010B	05/03-05/04/05	G9KND1C7
		Dilution Factor: 1					
		Analysis Time..: 13:54					

(Continued on next page)

MATRIX SPIKE SAMPLE EVALUATION REPORT

TOTAL Metals

Client Lot #...: F5D300120 **Matrix.....:** WATER
Date Sampled...: 04/29/05 09:45 **Date Received..:** 04/30/05

PARAMETER	PERCENT RECOVERY	RECOVERY LIMITS	RPD	RPD LIMITS	METHOD	PREPARATION-ANALYSIS DATE	WORK ORDER #
Copper	106	(75 - 125)			SW846 6010B	05/03-05/04/05	G9KND1DA
	104	(75 - 125)	2.3	(0-20)	SW846 6010B	05/03-05/04/05	G9KND1DC
		Dilution Factor: 1					
		Analysis Time..: 13:54					
Iron	80	(75 - 125)			SW846 6010B	05/03-05/04/05	G9KND1DD
	75 N	(75 - 125)	0.45	(0-20)	SW846 6010B	05/03-05/04/05	G9KND1DE
		Dilution Factor: 1					
		Analysis Time..: 10:03					
Magnesium	101	(75 - 125)			SW846 6010B	05/03-05/04/05	G9KND1DH
	99	(75 - 125)	1.9	(0-20)	SW846 6010B	05/03-05/04/05	G9KND1DJ
		Dilution Factor: 1					
		Analysis Time..: 13:54					
Manganese	102	(75 - 125)			SW846 6010B	05/03-05/04/05	G9KND1DK
	97	(75 - 125)	2.4	(0-20)	SW846 6010B	05/03-05/04/05	G9KND1DL
		Dilution Factor: 1					
		Analysis Time..: 13:54					
Nickel	100	(75 - 125)			SW846 6010B	05/03-05/04/05	G9KND1DP
	98	(75 - 125)	2.4	(0-20)	SW846 6010B	05/03-05/04/05	G9KND1DQ
		Dilution Factor: 1					
		Analysis Time..: 13:54					
Potassium	109	(75 - 125)			SW846 6010B	05/03-05/04/05	G9KND1DF
	106	(75 - 125)	2.8	(0-20)	SW846 6010B	05/03-05/04/05	G9KND1DG
		Dilution Factor: 1					
		Analysis Time..: 10:03					
Silver	121	(75 - 125)			SW846 6010B	05/03-05/04/05	G9KND1CR
	118	(75 - 125)	2.4	(0-20)	SW846 6010B	05/03-05/04/05	G9KND1CT
		Dilution Factor: 1					
		Analysis Time..: 13:54					
Sodium	101	(75 - 125)			SW846 6010B	05/03-05/04/05	G9KND1DM
	96	(75 - 125)	2.5	(0-20)	SW846 6010B	05/03-05/04/05	G9KND1DN
		Dilution Factor: 1					
		Analysis Time..: 10:03					
Vanadium	100	(75 - 125)			SW846 6010B	05/03-05/04/05	G9KND1DU
	98	(75 - 125)	2.2	(0-20)	SW846 6010B	05/03-05/04/05	G9KND1DV
		Dilution Factor: 1					
		Analysis Time..: 13:54					

(Continued on next page)

DATA VALIDATION WORKSHEET - Level III/IV Review
Radionuclide Analysis - DOE EML Methods (Gamma Spectroscopy)

Reviewer: JA
Date: 5/5/05
Review Document:
_X__ DOE EML Methods
_X__ STL Standard Operating Procedures
_X__ SAIC DV Duidelines

Project Name: GTEOSI Hicksville
Project Number: 25595516
SDG No.: FSD300120
Laboratory: STL St. Louis

1.0 Chain of Custody/Sample Condition

		Yes	No	NA
1.1	Do Chain-of-Custody forms list all samples that were analyzed?	[✓]		
1.2	Are all Chain-of-Custody forms signed, indicating sample chain-of-custody was maintained?	[✓]		
1.3	Do the traffic Reports, chain-of-custody, and lab narrative indicate any problems with sample receipt, condition of samples, analytical problems or special circumstances affecting the quality of the data?		[✓]	
1.4	Is any sample analyzed as a soil, other than TCLP, contains 50% -90% water? If yes, J(+)/UJ(-). If a soil sample other than TCLP contains more than 90% water, all data should be qualified as unusable (R).		[✓]	

Note:

2.0 Holding Time - Reason Code - h

		Yes	No	NA
2.1	Do sample preservation, collection and storage condition meet method requirement? If aqueous sample are to be collected without preservation, they should be brought to the laboratory within 5 days and then preserved and held in the original container for a minimum of 16 hour before analysis or transfer of the sample. If samples were not ice or the ice was melted upon arrival at the laboratory and the temperature of the cooler was elevated (> 20 ^{0}C), then flag all positive results with a "J" and all non-detects "UJ". If aqueous samples are not properly preserved (HNO3 to pH <2), J(+)/R(-).	[✓]		
2.2	Have any technical holding times, determined from sampling to date of analysis, been exceeded? Holding time criteria: 6 months for both soil and aqueous samples. If yes, J(+)/UJ(-).		[✓]	
2.3	Have any technical holding times been grossly (twice the holding time) exceeded? If yes, J(+)/R(-).		[✓]	

Note:

Date Collected	Date Analyzed.	H.T
4/29/05	5/1/05	2 days

3.0 Blanks (Method Blanks and Field Blanks) - Reason Code - p (MB) or x (FB)

		Yes	No	NA
3.1	Is a Method Blank Summary form present for each matrix, each instrument used to analyze samples, and each extraction batch?	[✓]		
3.2	Has a preparation/instrument blank been analyzed for each set of samples or every 20 samples of similar matrix, (water or soil) whichever is more frequent? If NO, J(+) only.	[✓]		
3.3	Do any preparation blanks have positive results (greater than the MDC)?		[✓]	

Sample Results	> MDC	< MDC
< 5X Blank Conc.	J	U at MDC

Note: MB (prep. batch 5720102) All ND's.

4.0 Initial Calibration - Reason Code - r

		Yes	No	NA
4.1	Is energy versus channel calibration established for spectroscopy systems annually or whem the daily performance check indicates an unacceptable change in energy gain or zero offset? The energy difference should be less than 0.1 keV for all points or within 0.0005 of the energy keV for at least 10 points. If NO, J(+)/UJ(-).	[ ]		✓
4.2	Is resolution versus energy calibration established for spectroscopy systems annually or whem the daily performance check indicates an unacceptable change in system resolution? The FWHM must be less than 3.0 keV at 1332keV. FWHM difference should be less than 0.500 keV for all points. If NO, J(+)/UJ(-).	[ ]		✓
4.3	Is efficiency versus energy curves established for gamma spectroscopy systems for the energy region of interest with particular attention to energy regions where the efficiency depends strongly on energy? The efficiency for all points should have a percent difference less than 5%. If NO, J(+)/UJ(-).	[ ]		✓
4.4	Is spectroscopy system background determinations established quaterly or when the routine performance check indicates an unacceptable change in system background? If NO, J(+)/UJ(-).	[ ]		✓

Note: Level II only

5.0 Continuing Calibration - Reason Code - c

		Yes	No	NA
5.1	Has a daily instrument calibration standard been analyzed for each instrument used?	[ ]		✓
5.2	Is any peak energy, efficiencies, resolution, or backgrounds outside QC limits in the daily calibration verification?		[ ]	✓

Detector peak energy, efficiencies, resolution (FWHM), and backgrounds are monitored using using 2 and 3 standard deviation as control limits. Investigate limit: (2σ to 3σ range). Results are acceptable. Action limit: > 3σ; J(+)/UJ(-)

Note: Level II only

7.0 Laboratory Control Sample (LCS) - Reason Code - l

		Yes	No	NA
7.1	Is an LCS recovery form present?	[✓]		
7.2	Is LCS analyzed at the required frequency for each matrix?	[✓]		
7.3	Are all LCS %Rs within acceptance criteria?	[✓]		

%R	> UCL%	10 - LCL%	< 10%
	J(+) only	J(+)/UJ(-)	J(+)/R(-)

Note: LCS (prep. batch 5120102) All %Rs were in control

8.0 Laboratory Duplicate Analysis -Reason Code - k

		Yes	No	NA
8.1	Were laboratory duplicate prepared and analyzed per sample batch of 20 or less samples?	[✓]		
8.2	Was a field QC sample used for duplicate analysis? If Yes, noted in the DV report.		[✓]	
8.3	Are matrix duplicate RER results less than 2 for aqueous and soil samples when both sample results are > 5 x MDC or RL? If No, J(+)/UJ(-). Replicate error ratio (RER)= | S-D | /SQRT(Us2 + Ud2)	[✓]		

If one or both results are < 5 x MDC or the RL, a control limit of ± MDC or RL for aqueous samples (± 2 x MDC or RL for soil samples) should be used for duplicate sample comparisons.

Note: Decon Water - All ND's.

9.0 Instrument Performance and Reported Detection Limits

		Yes	No	NA
9.1	Is the counting time sufficient for required sensitivity (20 pCi/L for aqueous sample and 0.2 pCi/g for soil sample)?	[ ]	✓	
9.2	Are minimum detectable concentration (MDC) meet project requirement (20 pCi/L for aqueous sample and 0.2 pCi/g for soil sample)?	[ ]	✓	
9.3	Are non-detect sample results flagged "U" at the MDC by the laboratory? If no, raise result to MDC and flag "U".	[ ]	✓	
9.4	Is the reported uncertainty of a sample result greater than the sample result itself? If yes, then J(+). If the uncertainty is greater than the MDC for a non-detect result, then UJ(-).		[✓]	

Note:

10.0 Field Duplicate Samples

		Yes	No	NA
10.1	Were any field duplicates submitted for analysis?	[ ]		✓
10.2	Were there any positive results detected in both samples?	[ ]		✓
10.3	Are all analyte duplicate results within control limits (RER < 3)? If No, J(+)/UJ(-) or professional judgement. Replicate error ratio (RER)= | S-FD | /SQRT(Us2 + Ud2). For sample results > 5 x MDC, a control limit of 3 DER for water and soil samples will be used. For sample results < 5 x MDC, a control limit of ± MDC for water and ± 2 x MDC for soil will be used.	[ ]		✓

Note:

11.0 Data Completeness

		Yes	No	NA
11.1	Is % completeness within the control limit? (95% for aqueous samples and 90% for soil samples)	[✓]		

11.1.1 Number of samples: 1

11.1.2 Number of target compounds in each analysis: 13

11.1.3 Number of results rejected and/or not reported: 0

% Completeness = (11.1.1 x 11.1.2 - 11.1.3) x 100/(14.1.1 x 11.1.2)

% Completeness = 100%

Note:

DATA VALIDATION WORKSHEET - Level III/IV Review
Radionuclide Analysis - DOE EML Methods Alpha-Spectroscopy

Reviewer: JA
Date: 5/5/05
Review Document:
_X__ **DOE EML Methods**
_X__ **STL Standard Operating Procedures**
_X__ **SAIC DV Duidelines**

Project Name: GTEOSI Hicksville
Project Number: 25595516
SDG No.: F5D300120
Laboratory: STL St. Louis

1.0 Chain of Custody/Sample Condition

		Yes	No	NA
1.1	Do Chain-of-Custody forms list all samples that were analyzed?	[✓]		
1.2	Are all Chain-of-Custody forms signed, indicating sample chain-of-custody was maintained?	[✓]		
1.3	Do the traffic Reports, chain-of-custody, and lab narrative indicate any problems with sample receipt, condition of samples, analytical problems or special circumstances affecting the quality of the data?		[✓]	
1.4	Is any sample analyzed as a soil, other than TCLP, contains 50% -90% water? If yes, J(+)/UJ(-). If a soil sample other than TCLP contains more than 90% water, all data should be qualified as unusable (R).		[✓]	

Note:

2.0 Holding Time - Reason Code - h

		Yes	No	NA
2.1	Do sample preservation, collection and storage condition meet method requirement? If aqueous sample are to be collected without preservation, they should be brought to the laboratory within 5 days and then preserved and held in the original container for a minimum of 16 hour before analysis or transfer of the sample. If samples were not ice or the ice was melted upon arrival at the laboratory and the temperature of the cooler was elevated (> 20 ^{0}C), then flag all positive results with a "J" and all non-detects "UJ". If aqueous samples are not properly preserved (HNO3 to pH <2), J(+)/R(-).	[✓]		
2.2	Have any technical holding times, determined from sampling to date of analysis, been exceeded? Holding time criteria: 6 months for both soil and aqueous samples. If yes, J(+)/UJ(-).		[✓]	
2.3	Have any technical holding times been grossly (twice the holding time) exceeded? If yes, J(+)/R(-).		[✓]	

Note: Date collected 4/29/05 Date Analyzed 5/2/05 H.T 3 days

3.0 Blanks (Method Blanks and Field Blanks) - Reason Code - p (MB) or x (FB)

		Yes	No	NA
3.1	Is a Method Blank Summary form present for each matrix, each instrument used to analyze samples, and each extraction batch?	[✓]		
3.2	Has a preparation/instrument blank been analyzed for each set of samples or every 20 samples of similar matrix, (water or soil) whichever is more frequent? If NO, J(+) only.	[✓]		
3.3	Do any preparation blanks have positive results (greater than the minimum detectable concentration (MDC))?	✓	[ ]	

Sample Results > MDC

< 5X Blank Conc. J

Note: MB - prep. batch 5120105 Thorium-230 0.27 ~~pCi/g~~ pCi/L

DD in Decon Water

4.0 Monthly Calibration - Reason Code - r

		Yes	No	NA
4.1	Is energy calibration established for spectroscopy systems monthly for alpha spectroscopy or whem the daily performance check indicates an unacceptable change in energy gain or zero offset? Peak energies for Am-241 (5479.1 keV), Pu-239 (5147.7 keV), U-234 (4761.5 keV), and U-238 (4184.4 keV) must be within ± 100 keV. If NO, R(+/-).	[ ]		✓
4.2	Is resolution calibration (FWHM) established for spectroscopy systems annually or whem the daily performance check indicates an unacceptable change in system resolution? FWHM ≤ 2 keV If NO, J(+).	[ ]		✓
4.4	Is single efficiency values used for alpha spectroscopy systems for alpha energies between 3.0 and 7.5 MeV? (An efficiency calibration is not required when comparative measurement or internal standardization is used.) If NO, R(+/-).	[ ]		✓
4.5	Is spectroscopy system background determinations established monthly or when the routine performance check indicates an unacceptable change in system background? If NO, R(+/-).	[ ]		✓

Note:

Level II only

5.0 Daily Calibration - Reason Code - c

		Yes	No	NA
5.1	Has a daily pulser standard been analyzed for each instrument used?	[ ]		✓
5.2	Do any detecotor or centroil channel have a energy calibration offset outside QC limit (i.e, ± 25%) in the daily pulser check? If YES, J(+)/UJ(-).		[ ]	✓
5.3	Do any detecotor or centroil channel have a gross counts outside QC limit (± 5%) in the daily pulser check? If YES, J(+)/UJ(-).		[ ]	✓
5.4	Do any detecotor or centroil channel have a constant FWHM outside QC limit (5-50 keV) in the daily pulser check? If YES, J(+)/UJ(-).		[ ]	✓
5.5	Do any detecotor or centroil channel have a pulser center criteria outside QC limit (± 5%) in the daily pulser check? If YES, J(+)/UJ(-).		[ ]	✓

Note: Level II only.

6.0 Laboratory Control Sample (LCS) - Reason Code - l

		Yes	No	NA
6.1	Is an LCS recovery form present?	[✓]		
6.2	Is LCS analyzed at the required frequency for each matrix?	[✓]		
6.3	Are all LCS %Rs within acceptance criteria?	[✓]		

%R	> UCL%	10 - LCL%	< 10%
	J(+) only	J(+)/UJ(-)	J(+)/R(-)

Note:

7.0 Tracer Recovery (thorium-229) - Reason Code - w

		Yes	No	NA
7.1	Are all samples listed on the appropriate Tracer Recovery Summary Form ?	[✓]		
7.2	Are tracer recoveries within acceptance criteria (45 - 105%) for all samples and method blanks?	(24) [✓]	✓	
7.3	If No in Section 5.2, are these sample(s) or method blank(s) reanalyzed with acceptable tracer recoveries? If No, J(+)/UJ(-).	[ ]	✓	

Note: Decon Water thorium-229 42% ↓ UJ,W

8.0 Laboratory Duplicate Analysis -Reason Code - k	Yes	No	NA
8.1 Were laboratory duplicate prepared and analyzed per sample batch of 20 or less samples?	[✓]		
8.2 Was a field QC sample used for duplicate analysis? If Yes, noted in the DV report.		[✓]	
8.3 Are matrix duplicate RER results less than 2 for aqueous and soil samples when both sample results are > 5 x MDC or RL? If No, J(+)/UJ(-). Replicate error ratio (RER)= | S-D | /SQRT(Us2 + Ud2) If one or both results are < 5 x MDC or the RL, a control limit of ± MDC or RL for aqueous samples (± 2 x MDC or RL for soil samples) should be used for duplicate sample comparisons.	[✓]		

Note: _____

9.0 Instrument Performance and Reported Detection Limits -Reason Code - Q	Yes	No	NA
9.1 Is the counting time or sample volumn sufficient for required sensitivity (1 pCi/L for aqueous and 0.4 pCi/g for soil)?	[✓]		
9.2 Do minimum detectable concentration (MDC) meet project requirement (1 pCi/L for aqueous and 0.4 pCi/g for soil)?	[✓]		
9.3 Are non-detect sample results flagged "U" at the MDC by the laboratory? If no, raise result to MDC and flag "U".	[ ]	✓	
9.4 Is the reported uncertainty of a sample result greater than the sample result itself? If yes, then J(+). If the uncertainty is greater than the MDC for a non-detect result, then UJ(-).		[✓]	

Note: _____

10.0 Field Duplicate Samples	Yes	No	NA
10.1 Were any field duplicates submitted for analysis?	[ ]		✓
10.2 Were there any positive results detected in both samples?	[ ]		✓
10.3 Are all analyte duplicate results within control limits (RER < 3)? If No, J(+)/UJ(-) or professional judgement. Replicate error ratio (RER)= | S-FD | /SQRT(Us2 + Ufd2). For sample results > 5 x MDC, a control limit of 3 DER for water and soil samples will be used. For sample results < 5 x MDC, a control limit of ± MDC for water and ± 2 x MDC for soil will be used.	[ ]		✓

Note: _____

11.0 Data Completeness	Yes	No	NA
11.1 Is % completeness within the control limit? (95% for aqueous samples and 90% for soil samples)	[✓]		

11.1.1 Number of samples: 1

11.1.2 Number of target compounds in each analysis: 6

11.1.3 Number of results rejected and/or not reported: 0

% Completeness = (11.1.1 x 11.1.2 - 11.1.3) x 100/(11.1.1 x 11.1.2)

% Completeness = 100%

METHOD BLANK REPORT

Severn Trent Laboratories - Radiochemistry

Client Lot ID: F5D300120
Matrix: WATER

Parameter	Result	Qual	Total Uncert. (2 σ+/-)	MDC	Prep Date	Analysis Date	Lab Sample ID Batch #	Yld %
Iso THORIUM (SHORT CT) NAS & DOE MOD			pCi/L	3004/RP-725			F5D300000-105B	
Thorium 228	0.08	U	0.14	0.21	04/30/05	05/02/05	5120105	83
Thorium 230	0.27	J	0.17	0.13	04/30/05	05/02/05	5120105	83
Thorium 232	-0.005	U	-0.049	0.098	04/30/05	05/02/05	5120105	83
Iso URANIUM (SHORT CT) NAS & DOE MOD			pCi/L	3050/RP-725			F5D300000-106B	
Uranium 234	0.006	U	0.095	0.17	04/30/05	05/02/05	5120106	94
Uranium 235	-0.022	U	-0.068	0.15	04/30/05	05/02/05	5120106	94
Uranium 238	-0.011	U	-0.064	0.14	04/30/05	05/02/05	5120106	94
Gamma Cs-137 & Hits by DOE GA-01-R MOD.			pCi/L	GA-01-R MOD			F5D300000-102B	
Actinium 228	7	U	21	48	04/30/05	05/01/05	5120102	
Bismuth 212	6	U	36	81	04/30/05	05/01/05	5120102	
Bismuth 214	9	U	15	33	04/30/05	05/01/05	5120102	
Lead 212	6	U	11	22	04/30/05	05/01/05	5120102	
Lead 214	10	U	14	29	04/30/05	05/01/05	5120102	
Protactinium 234M	80	U	650	1500	04/30/05	05/01/05	5120102	
Radium (226)	9	U	15	33	04/30/05	05/01/05	5120102	
Radium 228	11	U	20	48	04/30/05	05/01/05	5120102	
Thallium 208	5.9	U	7.2	17	04/30/05	05/01/05	5120102	
Thorium 232	11	U	20	48	04/30/05	05/01/05	5120102	
Thorium 234	20	U	120	220	04/30/05	05/01/05	5120102	
Uranium 235	-55	U	82	140	04/30/05	05/01/05	5120102	
Uranium 238	20	U	120	220	04/30/05	05/01/05	5120102	

NOTE(S)

Data are incomplete without the case narrative.

MDC is determined using instrument performance only
Bold results are greater than the MDC

J Result is greater than sample detection limit but less than stated reporting limit.
U Result is less than the sample detection limit.

Laboratory Control Sample Report

Severn Trent Laboratories - Radiochemistry

Client Lot ID: F5D300120
Matrix: WATER

Parameter	Spike Amount	Result	Total Uncert. (2 σ+/-)	MDC	% Yld	% Rec	Lab Sample ID / QC Control Limits
Gamma Cs-137 & Hits by DOE GA-01-R MOD.			pCi/L	GA-01-R MOD			F5D300000-102C
Americium 241	60700	58600	4200	300		97	(90 - 110)
Cesium 137	24400	23300	1600	100		96	(90 - 110)
Cobalt 60	40300	38300	2300	100		95	(90 - 110)
	Batch #:	5120102		Analysis Date:	05/01/05		
Iso THORIUM (SHORT CT) NAS & DOE MOD			pCi/L	3004/RP-725			F5D300000-105C
Thorium 230	7.91	7.6	1.0	0.1	85	96	(65 - 129)
	Batch #:	5120105		Analysis Date:	05/02/05		
Iso URANIUM (SHORT CT) NAS & DOE MOD			pCi/L	3050/RP-725			F5D300000-106C
Uranium 234	10.7	11.1	1.4	0.1	84	104	(77 - 109)
Uranium 238	10.7	11.5	1.5	0.1	84	107	(70 - 130)
	Batch #:	5120106		Analysis Date:	05/02/05		

NOTE(S)

MDC is determined by instrument performance only
Calculations are performed before rounding to avoid round-off error in calculated results

DUPLICATE EVALUATION REPORT

Severn Trent Laboratories - Radiochemistry

Client Lot ID: F5D300120 Date Sampled: 04/29/05
Matrix: WATER Date Received: 04/30/05

Parameter	SAMPLE Result		Total Uncert. (2σ+/-)	% Yld	DUPLICATE Result		Total Uncert. (2 σ+/-)	% Yld	QC Sample ID Precision	
Gamma Cs-137 & Hits by DOE GA-01-R MOD.				pCi/L	GA-01-R MOD				F5D300120-001	
Actinium 228	3	U	27		4	U	24		42	%RPD
Bismuth 212	8	U	54		21	U	56		85	%RPD
Bismuth 214	6	U	16		-7	U	14		-1,80	%RPD
Lead 212	4	U	11		10	U	12		95	%RPD
Lead 214	17	U	14		3	U	14		135	%RPD
Protactinium 234M	-840	U	920		-290	U	780		-97	%RPD
Radium (226)	6	U	16		-7	U	14		-1,82	%RPD
Radium 228	3	U	27		4	U	24		42	%RPD
Thallium 208	5.2	U	8.5		7.3	U	7.5		34	%RPD
Thorium 232	3	U	27		4	U	24		42	%RPD
Thorium 234	30	U	110		-20	U	120		984	%RPD
Uranium 235	52	U	80		14	U	78		138	%RPD
Uranium 238	30	U	110		-20	U	120		975	%RPD
	Batch #:		5120102	(Sample)	5120102	(Duplicate)				
Iso THORIUM (SHORT CT) NAS & DOE MOD				pCi/L	3004/RP-725				F5D300120-001	
Thorium 228	0.09	U	0.22	42	0.20	U	0.23	48	79	%RPD
Thorium 230	0.23	U	0.23	42	0.26	J	J,P 0.21	48	15	%RPD
Thorium 232	0.12	U	0.16	42	0.021	U	0.093	48	141	%RPD
	Batch #:		5120105	(Sample)	5120105	(Duplicate)				
Iso URANIUM (SHORT CT) NAS & DOE MOD				pCi/L	3050/RP-725				F5D300120-001	
Uranium 234	3.95		0.69	80	4.12		0.77	71	4	%RPD
Uranium 235	0.16	J	0.14	80	0.19	J	0.17	71	difference <MDA	%RPD
Uranium 238	4.23		0.72	80	4.02		0.76	71	5	%RPD
	Batch #:		5120106	(Sample)	5120106	(Duplicate)				

Blank contamination !

NOTE(S)

Data are incomplete without the case narrative.
Calculations are performed before rounding to avoid round-off error in calculated results

J Result is greater than sample detection limit but less than stated reporting limit.
U Result is less than the sample detection limit.

GTE OPERATIONS SUPPORT INCORPORATED

Client Sample ID: DECON WATER (BAKER TANK) DUP

QC sample

Severn Trent Laboratories - Radiochemistry

Lab Sample ID: F5D300120-001X
Work Order: G9KND
Matrix: WATER

Date Collected: 04/29/05 0945
Date Received: 04/30/05 0830

Parameter	Result	Qual	Total Uncert. (2 σ+/-)	MDC	Prep Date	Analysis Date	Batch #	Yld %
Gamma Cs-137 & Hits by DOE GA-01-R MOD.			pCi/L		GA-01-R MOD			
Actinium 228	4	U	24	51	04/30/05	05/01/05	5120102	
Bismuth 212	21	U	56	120	04/30/05	05/01/05	5120102	
Bismuth 214	-7	U	14	26	04/30/05	05/01/05	5120102	
Lead 212	10	U	12	23	04/30/05	05/01/05	5120102	
Lead 214	3	U	14	27	04/30/05	05/01/05	5120102	
Protactinium 234M	-290	U	780	1500	04/30/05	05/01/05	5120102	
Radium (226)	-7	U	14	26	04/30/05	05/01/05	5120102	
Radium 228	4	U	24	51	04/30/05	05/01/05	5120102	
Thallium 208	7.3	U	7.5	17	04/30/05	05/01/05	5120102	
Thorium 232	4	U	24	51	04/30/05	05/01/05	5120102	
Thorium 234	-20	U	120	220	04/30/05	05/01/05	5120102	
Uranium 235	14	U	78	150	04/30/05	05/01/05	5120102	
Uranium 238	-20	U	120	220	04/30/05	05/01/05	5120102	
Iso THORIUM (SHORT CT) NAS & DOE MOD			pCi/L		3004/RP-725			
Thorium 228	0.20	U	0.23	0.30	04/30/05	05/02/05	5120105	48
Thorium 230	0.26	J J.P	0.21	0.17	04/30/05	05/02/05	5120105	48
Thorium 232	0.021	U	0.093	0.20	04/30/05	05/02/05	5120105	48
Iso URANIUM (SHORT CT) NAS & DOE MOD			pCi/L		3050/RP-725			
Uranium 234	4.12		0.77	0.11	04/30/05	05/02/05	5120106	71
Uranium 235	0.19	J	0.17	0.09	04/30/05	05/02/05	5120106	71
Uranium 238	4.02		0.76	0.15	04/30/05	05/02/05	5120106	71

lab contamination

NOTE(S)

Data are incomplete without the case narrative.

MDC is determined by instrument performance only.
Bold results are greater than the MDC

J Result is greater than sample detection limit but less than stated reporting limit.
U Result is less than the sample detection limit.

F5D300120

CLIENT ANALYSIS SUMMARY

Storage Loc: V101,RAD68,A146

Project Manager: KEC
Quote #: 47179
SDG:
Project: GTE Hicksville HQE03060
PO#:
Report to: Carol Scholl
Client: 522968 GTE OPERATIONS SUPPORT INCORPORATED

RUSH

#SMPS in LOT: 1

Date Received: 2005-04-30
Analytical Due Date: 2005-05-04
Report Due Date: 2005-05-04
Report Type: C CLP
EDD Code: 99

all solids on dry weight basis - rad does not need moisture QC required: Dup for rad gamma,Th and U MS/MSD for VOA and MS/MSD for metals all billable
they will note QC on the COC VOA = Vinyl Chloride need RL of 1 and Total Xylene need RL of 1 if cannot meet flag to MDL....
VOA - RL for soils are very low

SAMPLE #	CLIENT SAMPLE ID	Site ID	Client Matrix	DATE/TIME SAMPLED	WORKORDER	I
1	DECON WATER (BAKER TANK)			2005-04-29 / 945	G9KND	WATER

SAMPLE COMMENTS:

CD	QM	SW846	6010B	Inductively Coupled Plasma (6010B Trace)	05	METALS, TOTAL - Waters	01	STANDARD TEST SET	PROT: A	WRK LOC	06		
MN	QM	SW846	6010B	Inductively Coupled Plasma (6010B Trace)	05	METALS, TOTAL - Waters	01	STANDARD TEST SET	PROT: A	WRK LOC	06		
MG	QM	SW846	6010B	Inductively Coupled Plasma (6010B Trace)	05	METALS, TOTAL - Waters	01	STANDARD TEST SET	PROT: A	WRK LOC	06		
KX	QM	SW846	6010B	Inductively Coupled Plasma (6010B Trace)	05	METALS, TOTAL - Waters	01	STANDARD TEST SET	PROT: A	WRK LOC	06		
FE	QM	SW846	6010B	Inductively Coupled Plasma (6010B Trace)	05	METALS, TOTAL - Waters	01	STANDARD TEST SET	PROT: A	WRK LOC	06		
CU	QM	SW846	6010B	Inductively Coupled Plasma (6010B Trace)	05	METALS, TOTAL - Waters	01	STANDARD TEST SET	PROT: A	WRK LOC	06		
AG	QM	SW846	6010B	Inductively Coupled Plasma (6010B Trace)	05	METALS, TOTAL - Waters	01	STANDARD TEST SET	PROT: A	WRK LOC	06		
CO	QM	SW846	6010B	Inductively Coupled Plasma (6010B Trace)	05	METALS, TOTAL - Waters	01	STANDARD TEST SET	PROT: A	WRK LOC	06		
PB	QM	SW846	6010B	Inductively Coupled Plasma (6010B Trace)	05	METALS, TOTAL - Waters	01	STANDARD TEST SET	PROT: A	WRK LOC	06		
CA	QM	SW846	6010B	Inductively Coupled Plasma (6010B Trace)	05	METALS, TOTAL - Waters	01	STANDARD TEST SET	PROT: A	WRK LOC	06		
BE	QM	SW846	6010B	Inductively Coupled Plasma (6010B Trace)	05	METALS, TOTAL - Waters	01	STANDARD TEST SET	PROT: A	WRK LOC	06		
BA	QM	SW846	6010B	Inductively Coupled Plasma (6010B Trace)	05	METALS, TOTAL - Waters	01	STANDARD TEST SET	PROT: A	WRK LOC	06		
AS	QM	SW846	6010B	Inductively Coupled Plasma (6010B Trace)	05	METALS, TOTAL - Waters	01	STANDARD TEST SET	PROT: A	WRK LOC	06		
AS	QM	SW846	6010B	Inductively Coupled Plasma (6010B Trace)	05	METALS, TOTAL - Waters	01	STANDARD TEST SET	PROT: A	WRK LOC	06		
AL	QM	SW846	6010B	Inductively Coupled Plasma (6010B Trace)	05	METALS, TOTAL - Waters	01	STANDARD TEST SET	PROT: A	WRK LOC	06		
CR	QM	SW846	6010B	Inductively Coupled Plasma (6010B Trace)	05	METALS, TOTAL - Waters	01	STANDARD TEST SET	PROT: A	WRK LOC	06		
TL	QM	SW846	6010B	Inductively Coupled Plasma (6010B Trace)	05	METALS, TOTAL - Waters	01	STANDARD TEST SET	PROT: A	WRK LOC	06		
ZN	QM	SW846	6010B	Inductively Coupled Plasma (6010B Trace)	05	METALS, TOTAL - Waters	01	STANDARD TEST SET	PROT: A	WRK LOC	06		
NA	QM	SW846	6010B	Inductively Coupled Plasma (6010B Trace)	05	METALS, TOTAL - Waters	01	STANDARD TEST SET	PROT: A	WRK LOC	06		
VX	QM	SW846	6010B	Inductively Coupled Plasma (6010B Trace)	05	METALS, TOTAL - Waters	01	STANDARD TEST SET	PROT: A	WRK LOC	06		
NI	QM	SW846	6010B	Inductively Coupled Plasma (6010B Trace)	05	METALS, TOTAL - Waters	01	STANDARD TEST SET	PROT: A	WRK LOC	06		
TL	QM	SW846	6010B	Inductively Coupled Plasma (6010B Trace)	05	METALS, TOTAL - Waters	01	STANDARD TEST SET	PROT: A	WRK LOC	06		
SE	QM	SW846	6010B	Inductively Coupled Plasma (6010B Trace)	05	METALS, TOTAL - Waters	01	STANDARD TEST SET	PROT: A	WRK LOC	06		
SE	QM	SW846	6010B	Inductively Coupled Plasma (6010B Trace)	05	METALS, TOTAL - Waters	01	STANDARD TEST SET	PROT: A	WRK LOC	06		
SB	QM	SW846	6010B	Inductively Coupled Plasma (6010B Trace)	05	METALS, TOTAL - Waters	01	STANDARD TEST SET	PROT: A	WRK LOC	06		
PB	QM	SW846	6010B	Inductively Coupled Plasma (6010B Trace)	05	METALS, TOTAL - Waters	01	STANDARD TEST SET	PROT: A	WRK LOC	06		
XX	QL	SW846	8270C	Base/Neutrals and Acids (8270C)	49	LIQ/LIQ, CONT (A/B/N) - Acid->Base	01	STANDARD TEST SET	PROT: A	WRK LOC	06	TIC: Y	
XX	QK	SW846	8260B	Volatile Organics, GC/MS (8260B)	25	PURGE AND TRAP - 25 mL purge (Waters)	01	STANDARD TEST SET	PROT: A	WRK LOC	06	TIC: Y	
XX	0A	EML	GA-01-R MOD	Gamma Cs-137 & Hits by DOE GA-01-R MOD.	G7	Direct Addition of Sample to Geometry	01	STANDARD TEST SET	PROT: A	WRK LOC	06		
XX	12	NAS/DOE	3050/RP-725 MOD	Iso URANIUM (SHORT CT) NAS & DOE MOD	IB	Uranium (ONLY) by Ion Ex and/or Extraction Chromatograhphy	01	STANDARD TEST SET	PROT: A	WRK LOC	06		
XX	14	NAS/DOE	3004/RP-725 MOD	Iso THORIUM (SHORT CT) NAS & DOE MOD	ID	Thorium (ONLY) by Ion Ex and/or Extraction Chromatograhphy	01	STANDARD TEST SET	PROT: A	WRK LOC	06		
XX	FJ	SW846	9040	pH (9040) - Aqueous	88	NO SAMPLE PREPARATION PERFORMED / DIRECT	01	STANDARD TEST SET	PROT: A	WRK LOC	06		

SAMPLE # CLIENT SAMPLE ID Site ID Client Matrix DATE/TIME SAMPLED WORKORDER I

F5D300120

CLIENT ANALYSIS SUMMARY

Storage Loc: V101

Project Manager: KEC
Quote #: 47179 SDG:
Project: GTE Hicksville HQE03060
PO#: Report to: Carol Scholl
Client: 522968 GTE OPERATIONS SUPPORT INCORPORATED

RUSH

#SMPS In LOT: 1

Date Received: 2005-04-30
Analytical Due Date: 2005-05-04
Report Due Date: 2005-05-04
Report Type: C CLP
EDD Code: 99

all solids on dry weight basis - rad does not need moisture QC required: Dup for rad gamma,Th and U MS/MSD for VOA and MS/MSD for metals all billable
they will note QC on the COC VOA = Vinyl Chloride need RL of 1 and Total Xylene need RL of 1 if cannot meet flag to MDL....
VOA - RL for soils are very low

2	TRIP BLANK	2005-04-29 / 0	G9K3H	WATER

SAMPLE COMMENTS:

XX	QK	SW846 8260B	Volatile Organics, GC/MS (8260B)	25	PURGE AND TRAP - 25 mL purge (Waters)	01	STANDARD TEST SET	PROT: A	WRK LOC	06	TIC: Y

Chain of Custody Record

SEVERN TRENT **STL**

Severn Trent Laboratories, Inc.

STL-4124 (0901)

Decon Water (Baker Tank)

Client: GTEOSI/URS	Project Manager: C. Scholl	Date: 4-29-05	Chain of Custody Number: 224240
Address: 1701 Golf Rd., Suite 1000	Telephone Number (Area Code)/Fax Number: 847-228-0707 / 847-228-1115	Lab Number	Page 1 of 1
City: Rolling Meadows; State: IL; Zip Code: 60008	Site Contact: Lester G.	Lab Contact: Kay Clay	
Project Name and Location (State): GTEOSI Hicksville, N.Y.	Carrier/Waybill Number: 8474 0866 6470		
Contract/Purchase Order/Quote No.: GTE HQE 03060			

Sample I.D. No. and Description (Containers for each sample may be combined on one line)	Date	Time	Matrix: Air	Aqueous	Sed.	Soil	Containers & Preservatives: Unpres.	H2SO4	HNO3	HCl	NaOH	ZnAc/NaOH	Containers	VOC (8260B)	pH	SVOC's	TAL Metals	Alpha Spec	Gamma Spec							Special Instructions/ Conditions of Receipt
Decon Water (Baker Tank)	4-29-05	0945		X						X			2	X												2x40
Trip Blank	↓	↓		X						X			2	X												↓
Decon Water (Baker Tank)				X			X						1		X											500G
↓				X			X						2			X										2xLG
				X					X				1				X									250P
				X					X				1					X								LP
	↓	↓		X					X				1						X							LP

Possible Hazard Identification: ☐ Non-Hazard ☐ Flammable ☐ Skin Irritant ☐ Poison B ☐ Unknown

Sample Disposal: ☐ Return To Client ☐ Disposal By Lab ☐ Archive For _____ Months (A fee may be assessed if samples are retained longer than 1 month)

Turn Around Time Required: ☐ 24 Hours ☐ 48 Hours ☐ 7 Days ☐ 14 Days ☐ 21 Days ☒ Other 3 DAYS

QC Requirements (Specify)

	Date	Time		Date	Time
1. Relinquished By: Bob Fabian	4-29-05	1145	1. Received By: FEDEX	4-29-05	1145
2. Relinquished By			2. Received By: [signature]	4-30-05	0830
3. Relinquished By			3. Received By		

Comments: NYSDEC: V-00089-1; URS: 27010-039

DISTRIBUTION: WHITE - Returned to Client with Report; CANARY - Stays with the Sample; PINK - Field Copy

SEVERN TRENT **STL**

Lot No: F5D300120

Condition Upon Receipt Form
St. Louis Laboratory

Client: GTE

Date: 4.30.05 Time: 0830

Quote No: 47179

Initiated by: SW

Shipper/No: Fed X 847408666470

COC/RFA Numbers: 224240

Condition/Variance (Circle "Y" for yes, "N" for no and "N/A" for not applicable):

1.	(Y) N	Sample received in undamaged condition?	7.	(Y) N	Sample received with Chain of Custody?
2.	(Y) N	Sample received within 4-C ± 2-C* ?	8.	(Y) N	Chain of Custody matches sample IDs on containers?
		Record 2°	9.	(Y) N N/A	Custody seal received intact on cooler.?
3.	(Y) N N/A	Sample received with proper pH [1] ?	10.	(Y) N N/A	Custody seal tamper evident on cooler.?
4.	Y N	If N/A - Was pH taken by original STL lab?	11.	Y N (N/A)	Custody seal on bottles received intact?
5.	(Y) N	Sample received in proper containers?	12.	Y N (N/A)	Custody seal tamper evident on bottles?
6.	(Y) N	Sample volume sufficient for analysis?	13.	Y N N/A	Was CUR (equivalent) rec' d from original STL lab?

* Temperature Variance Does Not Affect the Following Analyses:

[1]For DOE-AL (Pantex, LANL, Sandia) sites, verify pH all containers received, except for VOA, TOX, and soils.

Notes:

Corrective Action:

☐ Client's Name: Informed by: By:

☐ Sample(s) processed "as is".

☐ Sample(s) on hold until: If released, notify:

Project Management Review: Date: 05-03-05

THIS FORM MUST BE COMPLETED AT THE TIME THE ITEMS ARE BEING CHECKED
IF ANY ITEM IS COMPLETED BY SOMEONE OTHER THAN THE INITIATOR, THEN THAT PERSON IS REQUIRED TO APPLY THEIR INITIALS AND THE DATE NEXT TO THAT ITEM

ADMIN-0004, Revised 2/17/04
\\Slsvr01\QA\FORMS\ST-LOUIS\ADMIN\Admin004 rev7.doc

Case Narrative
LOT NUMBER: F5D300120

This report contains the analytical results for the two samples received under chain of custody by STL St. Louis on April 30, 2005. These samples are associated with your GTE Hicksville HQE03060 project.

The analytical results included in this report meet all applicable quality control procedure requirements except as noted below.

The test results in this report meet all NELAP requirements for parameters in which accreditations are held by STL St. Louis. Any exceptions to NELAP requirements are noted in the case narrative. The case narrative is an integral part of this report.

All chemical analysis results are based upon sample as received, wet weight, unless noted otherwise. All radiochemistry results are based upon sample as dried and ground with the exception of tritium, unless requested wet weight by the client.

Observations/Nonconformances

Reference the chain of custody and condition upon receipt report for any variations on receipt conditions and temperature of samples on receipt.

Method:
3050/RP-725 MOD

Affected Sample:
F5D300120 (1): DECON WATER (BAKER TANK)

Case Narrative:
There was an apparent switch in the sample duplicate and the LCS. The data printouts were hand corrected and the upload shows the correct results.

F5D300120-001 has a Thorium 229 tracer recovery outside control limits. The sample was analyzed in duplicate which had an acceptable tracer recovery. The RPD/RER are acceptable, therefore this anomaly had no affect on the sample result. The results will be reported with this narrative.

Method:
8270C

Affected Sample:
F5D300120 (1): DECON WATER (BAKER TANK)

?

Case Narrative:
The Method Blank exhibited poor surrogate recovery. Laboratory QC practices, based on CLP methodology, allow for one acid surrogate and/or one base surrogate recovery excursion without

necessitating re-extraction/re-analysis. Sample extraction efficiency and compliance is demonstrated by the remaining acceptable surrogate recoveries. Sample results are reported with this narrative.

The LCS/LCSD RPD is not within method acceptance criteria. LCS/LCSD recoveries are within QC limits demonstrating good extraction performance in the sample matrix. No further action is required.

Method:
8260B

Affected Samples:
F5D300120 (1): DECON WATER (BAKER TANK)
F5D300120 (2): TRIP BLANK

Case Narrative:
The LCS recoveries are outside QC limits for less than 10% of the compounds spiked. Laboratory QC practices, based on federal guidance documents, allow for up to 10% of the spike compounds to be outside QC criteria without necessitating re-preparation/re-analysis. Sample purge efficiency and compliance is demonstrated by the remaining acceptable LCS recoveries.

The MS/MSD RPD is not within method acceptance criteria for three compounds. MS/MSD recoveries are within QC limits demonstrating good extraction performance in the sample matrix. No further action is required.

The MSD recovery for Acetone is outside the established QC limits. The said analyte concentration in the original sample is greater than 4 times the amount spike, making % recovery information statistically invalid. Method performance is demonstrated by acceptable LCS recovery. No further action is required.

Method:
6010B

Affected Sample:
F5D300120 (1): DECON WATER (BAKER TANK)

Case Narrative:
5123437
The MS and MSD recoveries for aluminum are outside the established QC limits. The said analyte concentration in the original sample is greater than 4 times the amount spiked, making % recovery information ineffective. Method performance is demonstrated by acceptable LCS recovery. No further action is required.

Data Qualifying Codes

Two types of data qualifying codes or flags are applied in the course of the data review. The data validation flags indicate data that are not usable for decision making, more than normally biased and/or variable, or not representative of field conditions. These codes and their definitions are presented below in the hierarchy stipulated in the USEPA National Functional Guidelines for Data Review.

Data Validation Flags

Flag	Interpretation
R	The sample results are rejected due to serious deficiencies in the ability to analyze the sample and meet quality control criteria. The presence or absence of the analyte cannot be verified.
J	The analyte was positively identified; the associated numerical value is the approximate concentration of the analyte in the sample.
N	The analysis indicates the present of an analyte for which there is presumptive evidence to make a "tentative identification."
NJ	The analyte indicates the presence of an analyte that has been "tentatively identified" and the associated numerical value represents its approximate concentration.
U	The analyte was analyzed for, but was not detected above the reported sample quantitation limit.
UJ	The analyte was not detected above the reported sample quantitation limit. However, the reported quantitation limit is approximate and may or may not represent the actual limit of quantitation necessary to accurately and precisely measure the analyte in the sample.

Table 2: Reason Codes

The other type of code used by URS is a Reason Code. The reason code indicates the type of quality control failure that lead to the application of the data validation flag.

GC/MS Organics		GC and HPLC Organics		Inorganics and Radionuclide	
Code	Interpretation	Code	Interpretation	Code	Interpretation
a	Incorrect or incomplete analytical sequence	a	Incorrect or incomplete analytical sequence	a	Incorrect or incomplete analytical sequence
c	Calibration failure; poor (RRF) or unstable (%D) response	b	Instrument performance failure or poor chromatography	c	Calibration failure
d	MS/MSD or LCS/LCSD RPD imprecision	c	Calibration failure; poor or unstable (%D) response	d	MS/MSD or LCS/LCSD RPD imprecision
e	Sample preservation or cooler temperature failure	d	MS/MSD or LCS/LCSD RPD imprecision	e	Sample preservation or cooler temperature failure
f	Field duplicate imprecision	e	Sample preservation or cooler temperature failure	f	Field duplicate imprecision
h	Holding time violation	f	Field duplicate imprecision	h	Holding time violation
j	Tuning Failure or poor mass spectrometer performance	g	Dual column confirmation imprecision	k	Laboratory duplicate imprecision
l	LCS recovery failure	h	Holding time violation	l	LCS recovery failure
m	MS/MSD recovery failure	l	LCS recovery failure	m	MS/MSD recovery failure
n	Internal standard failure	m	MS/MSD recovery failure	n	ICP interference check sample failure
p	Air bubble (> 6 mm or ¼ inch) in VOC vials	p	Air bubble (> 6 mm or ¼ inch) in VOC vials	o	Calibration blank contamination
q	Concentration exceeded the linear range	q	Concentration exceeded the linear range	p	Preparation blank contamination
r	linearity (%RSD or r) failure in initial calibration	r	linearity (%RSD or r) failure in initial calibration	q	Concentration exceeded the linear range
s	Surrogate failure	s	Surrogate failure	r	Linearity failure in calibration or MSA
t	Tentatively identified Compound	u	No confirmation column	s	Serial dilution failure
w	Common Laboratory Contaminant	w	Identification criteria failure	v	Post-digestion spike failure
x	Field and/or equipment blank contamination	x	Field and/or equipment blank contamination	w	CRDL standard or tracer recovery failure
y	Trip blank contamination	y	Trip blank contamination	x	Field and/or equipment blank contamination
z	Method blank and/or storage blank contamination	z	Method blank and/or storage blank contamination	z	Laboratory storage blank contamination
Q	Other – see bottom of data report for explanation	Q	Other – see bottom of data report for explanation	Q1 Q2	Result raised to the minimum detectable concentration Total uncertainty greater than the reported result

MALCOLM PIRNIE

LETTER OF TRANSMITTAL

To: Verizon
GTE Operations support Incorporated
600 Hidden Ridge Drive (HQE03E75)
Irving, TX 75038

Date: April 15, 2005
Re: Groundwater Profiling IDW documents & Photo CD

Attention: Elie Ghannoum
(972) 718-4806
Project #: 4563001

We are sending you x Enclosed ☐ Under separate cover via ☐ Mail ☐ Messenger, the following items:

☐ shop drawings ☐ prints ☐ data sheets ☐ _____

☐ specifications ☐ sketches ☐ brochures ☐ _____

Our action relative to items submitted for approval has been noted on the drawings.

COPIES	PREPARED BY	REFERENCE NO.	DESCRIPTION
1	jji		Copy of 2003/2004 Groundwater Profiling IDW analytical and manifests
1	jji		CD with Groundwater Profiling Photos

Non Hazardous Drill Cutting 2003/2004

THESE ARE TRAN

x As requeste
☐ For your use
☐ For review & comment
☐ For your information

☐ Approved as Corrected
☐ Revise and Resubmit
☐ Not Approved

☐ Resubmit _____ copies for approval
☐ Submit _____ copies for distribution
☐ Return _____ corrected Prints
☐ _____

Remarks: _____

John J Ifkovits
17-17 Route 208 North
Fair Lawn, NY 07410

Very truly yours,

John J Ifkovits

Copies:

DB Analysis ID: 3,412

Sample Description: special groundwater profiling p-25 0 to 365 ft 9-5-03 0957 4hr

Spectrum Filename: SPECIA~2.AN1

counted sample overnight from 9/11 to 9/12

Acquisition Information

Start Time:	12-Sep-2003 1:59:12AM		
Live Time:	14400.00	Real Time:	14411.56
Dead Time:	0.08 %		
Detector ID:	1	Sample Size:	1,644 grams

Detector System: DSPE-601

Calibration

Description:	1 Liter Marinelli Source (source # 968-83-2) 9-11-03		
Filename:	C:\Gamma Spec\Calibrations\Energy Calibration Marinelli Detector 1 9-11-03.Clb		
Energy Created:	11-Sep-2003 7:17:33AM	Efficiency Created:	23-Apr-2003 10:05:23AM
Zero Offset:	0.010 keV	Gain:	0.250 keV/Channel

Library 1 File: GTEOSI.Lib Library based peak stripping used.

Analysis Parameters

Start Channel:	150 for an energy of 37.51 keV
Stop Channel:	8,000 for an energy of 2000.18 keV
Peak rejection level:	100.000 %
Activity Scaling Factor:	1,000,000 / 1 = 1,000,000
Detection Limit Method:	Currie limit
Additional random error:	0.0000
Additional systematic error:	0.0000
Fraction Limit:	0.0000%
Background Width:	Best method (based on spectrum)

Corrections

	Status	Comments
Decay Correct to Date:	NO	
Decay During Acquisition:	NO	
Peaked Background Correction:	NO	
Absorption:	NO	
Geometry Correction:	NO	
Random Summing:	NO	

Energy Calibration Normalized Difference: 0.1150

Sample Description: special groundwater profiling p-25 0 to 365 ft 9-5-03 0957 4hr

UNIDENTIFIED PEAK SUMMARY

Peak Channel	Centroid Energy	Background Counts	Net Area Counts	Intensity Cts/Sec	Uncertainty 2 Sigma%	FWHM keV	Suspected Nuclide	Code
151.85	37.97	405.00	469.00	0.033	16.78	0.964	CE-139	s
412.56	103.17	899.92	45.29	0.003	189.67	0.827	GD-153	D
460.05	114.97	749.11	88.89	0.006	89.64	0.837	PA-234	D
3052.64	763.13	151.50	24.50	0.002	192.27	0.648	TL-208	sM

s = Peak fails shape tests.

D = Peak area deconvoluted.

Sample Description: special groundwater profiling p-25 0 to 365 ft 9-5-03 0957 4hr

SUMMARY OF NUCLIDES IN SAMPLE

Nuclide		Time of Count Activity pCi/g	Total Uncertainty 2 Sigma pCi/g	Total Uncertainty 2 Sigma %	Minimum Detectable Activity pCi/g
AC-228		2.608E-001	2.041E-002	7.83	3.534E-003
BI-212		1.679E-001	2.755E-002	16.41	8.293E-003
BI-214		1.836E-001	1.225E-002	6.67	2.595E-003
CS-137		1.907E-003	2.073E-003	108.71	1.145E-003
K-40		1.042E+000	7.073E-002	6.79	1.107E-002
PA-234	<		1.644E-004	3.71	4.429E-003
Pa-234m	#	7.871E-001	4.229E-001	53.72	1.505E-001
PB-212		2.405E-001	1.209E-002	5.02	2.256E-003
PB-214		1.955E-001	1.241E-002	6.35	2.955E-003
RA-224		2.421E-001	6.568E-002	27.13	3.518E-002
RA-226	#				
Th-231		8.569E-002	4.486E-002	52.35	2.504E-002
TH-234		5.028E-001	1.616E-001	32.13	4.586E-001
TL-208		8.051E-002	5.893E-003	7.32	1.197E-003
U-235		5.352E-002	2.433E-002	45.47	9.440E-003

= All peaks for activity calculation had bad shape

LABORATORY CORRECTIONS:

Th-232 Activity Concentration:		0.37	pCi/g
U-235 Activity Concentration:	5.07	0.31	pCi/g
U-238 STL Alpha Spec. Correction:	5.63	2.31	pCi/g
U-238 STL Alpha Spec. Correction at the 2-Sigma UCL :		3.41	pCi/g

Total Activity (37.51 to 2,000.18 keV) 3.84 pCi/g

Analyzed by: _____

Gamma Spec. Analyst

Reviewed by: _____

Supervisor (or Peer Review for WS Samples)

Laboratory: GTEOSI

Date Analyzed: 12-Sep-2003 at 1:59:12AM

Printed: 12-Sep-2003 5:59:32AM

DB Analysis ID: 2,452

Sample Description: special groundwater profiling p-24 0 to 120 ft 9-5-03 10:03 4hr

Spectrum Filename: SPECIA~3.AN1

Acquisition Information

Start Time:	12-Sep-2003 2:01:41AM		
Live Time:	14400.00	Real Time:	14418.66
Dead Time:	0.13 %		
Detector ID:	2	Sample Size:	1,608 grams

Detector System: DSPE-617

Calibration

Description:	Energy Calibration performed on 9-11-03		
Filename:	C:\Gamma Spec\Calibrations\Energy Calibration Marinelli Detector2 9-11-03.Clb		
Energy Created:	11-Sep-2003 7:20:32AM	Efficiency Created:	28-May-2003 2:49:30PM
Zero Offset:	0.050 keV	Gain:	0.250 keV/Channel

Library 1 File: GTEOSI.Lib Library based peak stripping used.

Analysis Parameters

Start Channel:	150 for an energy of 37.55 keV
Stop Channel:	8,000 for an energy of 2000.11 keV
Peak rejection level:	100.000 %
Activity Scaling Factor:	1,000,000 / 1 = 1,000,000
Detection Limit Method:	Currie limit
Additional random error:	0.0000
Additional systematic error:	0.0000
Fraction Limit:	0.0000%
Background Width:	Best method (based on spectrum)

Corrections

	Status	Comments
Decay Correct to Date:	NO	
Decay During Acquisition:	NO	
Peaked Background Correction:	NO	
Absorption:	NO	
Geometry Correction:	NO	
Random Summing:	NO	

Energy Calibration Normalized Difference: 0.1241

Sample Description: special groundwater profiling p-24 0 to 120 ft 9-5-03 10:03 4hr

Sample Description: special groundwater profiling p-24 0 to 120 ft 9-5-03 10:03 4hr

UNIDENTIFIED PEAK SUMMARY

Peak Channel	Centroid Energy	Background Counts	Net Area Counts	Intensity Cts/Sec	Uncertainty 2 Sigma%	FWHM keV	Suspected Nuclide	Code
152.26	38.11	363.33	277.67	0.019	25.43	0.947	ND-147	s
729.78	182.48	489.00	39.00	0.003	182.14	0.352		sM
1010.48	252.66	308.00	73.00	0.005	84.25	0.502		s
1864.65	466.15	100.87	33.11	0.002	92.57	1.090		D
2250.02	562.36	126.71	67.29	0.005	53.23	1.170	AS-76	D

s = Peak fails shape tests.

D = Peak area deconvoluted.

Sample Description: special groundwater profiling p-24 0 to 120 ft 9-5-03 10:03 4hr

SUMMARY OF NUCLIDES IN SAMPLE

Nuclide		Time of Count Activity pCi/g	Total Uncertainty 2 Sigma pCi/g	Total Uncertainty 2 Sigma %	Minimum Detectable Activity pCi/g
AC-228		3.659E-001	3.019E-002	8.25	5.412E-003
BI-212		2.352E-001	4.539E-002	19.30	1.465E-002
BI-214		2.414E-001	1.751E-002	7.25	3.718E-003
CS-137	<		5.780E-005	3.14	1.843E-003
K-40		1.890E+000	1.256E-001	6.64	1.873E-002
PA-234	<		1.547E-004	3.14	4.935E-003
Pa-234m		1.024E+000	6.265E-001	61.21	2.287E-001
PB-212		3.658E-001	1.698E-002	4.64	3.066E-003
PB-214		2.426E-001	1.701E-002	7.01	3.996E-003
RA-224		3.749E-001	9.291E-002	24.78	4.871E-002
RA-226	#				
Th-231		1.706E-001	5.845E-002	34.26	3.171E-002
TH-234		4.965E-001	3.434E-001	69.16	5.998E-001
TL-208		1.316E-001	1.033E-002	7.84	1.929E-003
U-235		5.215E-002	3.326E-002	63.79	1.370E-002

= All peaks for activity calculation had bad shape

LABORATORY CORRECTIONS:

Th-232 Activity Concentration:	0.52	pCi/g
U-235 Activity Concentration:	0.07	pCi/g
U-238 STL Alpha Spec. Correction:	0.67	pCi/g
U-238 STL Alpha Spec. Correction at the 2-Sigma UCL :	1.01	pCi/g

Total Activity (37.55 to 2,000.11 keV) 5.59 pCi/g

Analyzed by: _____
Gamma Spec. Analyst

Reviewed by: _____ 9-15-03
Supervisor (or Peer Review for WS Samples)

Laboratory: urs

Date Analyzed: 12-Sep-2003 at 2:01:41AM

Printed: 12-Sep-2003 6:02:14AM

DB Analysis ID: 3,484

Sample Description: special groundwater profiling p-35 0 to 347 ft 9-5-03 09:50

Spectrum Filename: SPECIA~1.AN1

Acquisition Information

Start Time:	13-Sep-2003 5:20:51PM		
Live Time:	14400.00	Real Time:	14413.52
Dead Time:	0.09 %		
Detector ID:	1	Sample Size:	1,780 grams

Detector System: DSPE-601

Calibration

Description:	1 Liter Marinelli Source (source # 968-83-2) 9-13-03		
Filename:	C:\Gamma Spec\Calibrations\Energy Calibration Marinelli Detector 1 9-13-03.Clb		
Energy Created:	13-Sep-2003 7:29:48AM	Efficiency Created:	23-Apr-2003 10:05:23AM
Zero Offset:	0.010 keV	Gain:	0.250 keV/Channel

Library 1 File: GTEOSI.Lib Library based peak stripping used.

Analysis Parameters

Start Channel:	150 for an energy of 37.50 keV
Stop Channel:	8,000 for an energy of 1999.87 keV
Peak rejection level:	100.000 %
Activity Scaling Factor:	1,000,000 / 1 = 1,000,000
Detection Limit Method:	Currie limit
Additional random error:	0.0000
Additional systematic error:	0.0000
Fraction Limit:	0.0000%
Background Width:	Best method (based on spectrum)

Corrections

	Status	Comments
Decay Correct to Date:	NO	
Decay During Acquisition:	NO	
Peaked Background Correction:	NO	
Absorption:	NO	
Geometry Correction:	NO	
Random Summing:	NO	

Energy Calibration Normalized Difference: 0.1524

Sample Description: special groundwater profiling p-35 0 to 347 ft 9-5-03 09:50

Sample Description: special groundwater profiling p-35 0 to 347 ft 9-5-03 09:50

UNIDENTIFIED PEAK SUMMARY

Peak Channel	Centroid Energy	Background Counts	Net Area Counts	Intensity Cts/Sec	Uncertainty 2 Sigma%	FWHM keV	Suspected Nuclide	Code
151.51	38.07	420.18	636.82	0.044	12.07	0.778	ND-147	D
163.17	40.98	914.31	201.69	0.014	44.68	0.781	CE-144	D
184.90	46.22	895.50	116.50	0.008	83.31	0.896	TB-160	
336.13	84.04	1485.87	316.13	0.022	36.28	0.817	TA-182	D
421.48	105.37	1206.72	161.28	0.011	62.92	0.835	EU-155	D
473.36	118.32	1190.00	88.00	0.006	137.46	0.538	NP-239	s
617.55	154.30	1497.50	251.50	0.017	58.94	0.682	XE-138	s
707.44	176.82	838.33	89.67	0.006	107.56	0.622	CS-136	s
761.03	190.22	1152.50	133.50	0.009	96.71	0.588		s
1009.87	252.41	693.00	67.00	0.005	145.54	0.754		
1463.42	365.78	268.02	50.98	0.004	95.05	1.045	MO-99	D
3619.10	904.62	110.83	97.17	0.007	48.66	0.864	KR-89	s
4341.87	1085.30	61.33	32.67	0.002	98.26	0.566	EU-152	s

s = Peak fails shape tests.

D = Peak area deconvoluted.

Sample Description: special groundwater profiling p-35 0 to 347 ft 9-5-03 09:50

SUMMARY OF NUCLIDES IN SAMPLE

Nuclide		Time of Count Activity pCi/g	Total Uncertainty 2 Sigma pCi/g	Total Uncertainty 2 Sigma %	Minimum Detectable Activity pCi/g
AC-228		3.046E-001	2.144E-002	7.04	3.682E-003
BI-212		1.949E-001	2.940E-002	15.08	8.944E-003
BI-214		2.225E-001	1.318E-002	5.93	2.512E-003
CS-137		1.617E-003	2.028E-003	125.42	1.132E-003
K-40		1.386E+000	8.382E-002	6.05	1.319E-002
PA-234	<		1.456E-004	3.71	3.923E-003
Pa-234m		1.714E+000	5.579E-001	32.54	1.748E-001
PB-212		2.964E-001	1.398E-002	4.72	2.293E-003
PB-214		2.349E-001	1.589E-002	6.76	3.058E-003
RA-224		2.645E-001	6.690E-002	25.29	3.585E-002
RA-226	#	1.016E-001	6.308E-002	62.06	
Th-231	<		8.259E-004	2.89	2.861E-002
TH-234		5.036E-001	1.789E-001	35.52	4.912E-001
TL-208		9.808E-002	6.504E-003	6.63	1.323E-003
U-235		3.861E-002	2.558E-002	66.25	1.011E-002

= All peaks for activity calculation had bad shape

LABORATORY CORRECTIONS:

Th-232 Activity Concentration:	0.43	pCi/g
U-235 Activity Concentration:	0.05	pCi/g
U-238 STL Alpha Spec. Correction:	0.68	pCi/g
U-238 STL Alpha Spec. Correction at the 2-Sigma UCL :	0.86	pCi/g

Total Activity (37.50 to 1,999.87 keV) 5.36 pCi/g

Analyzed by: _____

Gamma Spec. Analyst

Reviewed by: _____

Supervisor (or Peer Review for WS Samples)

Laboratory: GTEOSI

Date Analyzed: 13-Sep-2003 at 5:20:51PM

Printed: 13-Sep-2003 9:21:16PM

ACCREDITED LABORATORIES, INC.

Implementing Tomorrow's Technology, Today™...

Analytical Data Report

for

A W T Environmental Services
P. O. BOX 128
Sayreville, NJ 08872

Project: M P I - G T E

Accredited Laboratories Case No.: 1776
Date Received: 08/15/03

Field ID	Laboratory Sample #
PDA	200307966
PEA	200307967
PFA	200307968
PHA	200307969
P17A	200307970
P23A	200307971
P25A	200307972
P26A	200307973
P28A	200307974
P42A	200307975
PEB	200307976
PHB	200307977
P24	200307978
P15A	200307979
P27A	200307980
P24A	200307981
PCA	200307982

Accredited Laboratories, Inc. New Jersey Certification Number 12007. This data has been reviewed and accepted by:

Theodore C. Gaydos
Technical Director

(732) 541-2025

CORPORATE OFFICES
20 Pershing Avenue
Carteret, New Jersey 07008

FAX (732) 541-1383

TOTAL # OF PAGES 61

Printed on RECYCLED paper made with 20% post consumer waste

TABLE OF CONTENTS

	page
Chain of Custody	1
Methodology Summary	3
Conformance/Non-conformance Summary	4
Analytical Results	
TCLP Volatile Organics	5
TCLP Base Neutral Acid Extractable Organics	24
TCLP Metal Analysis	44

ACCREDITED LABORATORIES INC.
20 PERSHING AVENUE
CARTERET, NEW JERSEY 07008
PHONE (732) 541-2025 FAX (732) 541-0452

STATE AGENCY

CLIENT	A.W.T. ENVIRONMENTAL	PROJECT	MPI - GTE
ADDRESS	PO BOX 128	CONTACT	DAVID ALMAGUOS
CITY	SAYREVILLE	PHONE	732-613-1660
STATE	NJ ZIP 08871	FAX	732-613-1536

ALI SAMPLE #	FIELD ID	*C	**M	DATE / TIME SAMPLED	SAMPLE DESCRIPTION	ANALYSIS
0307966	PDA	2	A	8-13-03	WATER	TCLP METALS (RCRA 8)
0307967	PEA	2	A	8-13-03	WATER	TCLP VOA
0307968	PFA	2	A	8-13-03	WATER	TCLP SEMI VOA
0307969	PHA	2	A	8-13-03	WATER	
0307970	P17A	2	A	8-13-03	WATER	
0307971	P23A	2	A	8-13-03	WATER	
0307972	P25A	2	A	8-13-03	WATER	
0307973	P26A	2	A	8-13-03	WATER	
0307974	P28A	2	A	8-13-03	WATER	
0307975	P42A	2	A	8-13-03	WATER	
0307976	PEB	1	S	8-13-03	SOIL	
0307977	PHB	2	S	8-13-03	SOIL	

**M = MATRIX: A=AQUEOUS S=SOIL G=SLUDGE P=POTABLE WATER O=OIL F=FILTER K=SOLID X=

*C = NO. CONTAINERS | TURNAROUND: (If Blank, as

DELIVERABLES (circle one): STD REDUCED FULL OTHER

RELINQUISHED BY: PRINT	SIGN	RECEIVED BY: PRINT	SIGN	ORGANIZATION	DATE	TIME	REASON
JOE PARISI				AWT	8-14-03	4:00	Trans

PERSON(S) ASSUMING RESPONSIBILITY FOR SAMPLE SHIPMENT: DATE:

COMMENTS

ALI QUOTE#
ALI CASE#
P.O.#

1776
8150 DA

ACCREDITED LABORATORIES
20 PERSHING AVENUE
CARTERET, NEW JERSEY 07008
PHONE (732) 541-2025

CLIENT	AWT Environmental	PROJECT	MPI - GTE
ADDRESS	PO Box 128	CONTACT	Davis Alagondos
CITY	Sayreville	PHONE	732-613-1660
STATE	NJ	ZIP 08871	FAX 732-613-1536

ALI SAMPLE #	FIELD ID	*C	**M	DATE / TIME SAMPLED	SAMPLE DESCRIPTION	ANALYSIS
0307978	P24	2	S	10-14-03	SOIL	TCLP METALS (RCRA 8) TCLP VOA TCLP SEMI VOA
0307979	P15A	2	A	10-14-03	WATER	
0307980	P27A	2	A	10-14-03	WATER	
0307981	P24A	2	A	10-14-03	WATER	
0307982	PCA	2	A	10-14-03	WATER	

**M = MATRIX A=AQUEOUS S=SOIL G=SLUDGE P=POTABLE WATER O=OIL F=FILTER K=SOLID

*C = NO. CONTAINERS TURNAROUND: (If Stan

DELIVERABLES (circle one) STD REDUCED FULL OTHER

RELINQUISHED BY: PRINT	RELINQUISHED BY: SIGN	RECEIVED BY: PRINT	RECEIVED BY: SIGN	ORGANIZATION	DATE	TIME	REMARKS
Jonelong	[signature]	R Cobb	[signature]	ALI	8-14-03		Tem

PERSON(S) ASSUMING RESPONSIBILITY FOR SAMPLING: PRINT SIGN

2

COMMENTS		ALI QUOTE#	
		ALI CASE#	1776
	Ambient Temp 4°C	P.O.#	8150

METHODOLOGY SUMMARY

Toxic Characteristic Leaching Procedure - TCLP (EPA Method 1311)

Before the leaching procedure can be initiated, the information regarding the wet % and dry % solid of the solid sample as well as the utilization of extraction fluid, either #1 or #2, must be determined.

For Volatile Analysis, a special extractor called Zero Headspace Extractor (ZHE) must be used to generate the TCLP leachate. A maximum of 25 grams of sample is placed in the vessel as the liquid portion is pressed out and saved. A 20X of extraction fluid #1 is charged into the vessel. After 18 +/- 2 hours rotation at 30 +/- 2 rpm, the liquid is pressed out of the vessel. The leachate from ZHE is combined with the initial liquid portion, if any. This is referred as TCLP Leachate. The contaminants in the leachate is determined by EPA Method 8260.

For Non-Volatile Analysis, a minimum of 100 grams is filtered through 0.6 to 0.8 um glass fiber filter. The filtrate, if any, is saved. A 20X of extracted fluid, either #1 or #2, is charged in the glass extraction bottle and then rotated at 30 +/- 2 rpm for 18 +/- 2 hours. After rotation, the sample is filtered through 0.6 to 0.8 um glass fiber filter. The filtrate is combined with the initial liquid, if any. This is referred as TCLP Leachate. The contaminants of Base Neutrals/Acids (BNA) in the leachate are determined by EPA Method 8270.

For the Metal Analysis, a minimum of 100 grams is filtered through 0.6 to 0.8 um glass fiber filter. The filtrate, if any, is saved. A 20X of extracted fluid, either #1 or #2, is charged in the glass or plastic extraction bottle and then rotated at 30 +/- rpm for 18 +/- 2 hours. After rotation, the sample is filtered through 0.6 to 0.8 um glass fiber filter. The filtrate is combined with the initial liquid, if any. This is referred as TCLP Leachate. The contaminants of Metals in the leachate is determined by EPA Method 7471 for mercury, Method 7060 for arsenic, Method 7740 for selenium and Method 6010 (ICAP) and/or Method 7000's (Flame-AA) for the rest of metals.

CONFORMANCE/NON-CONFORMANCE SUMMARY

Accredited Labs received 14 aqueous samples and 3 soil samples (Project: M P I -G T E; ALI Case #1776) from A W T Environmental Services on 08/15/03 for the analyses of TCLP VO, TCLP BNA and TCLP Metals.

All analyses were performed within the required holding time.

In the TCLP BNA analysis, two surrogates (Nitrobenzene-d5 and 2-Fluorobiphenyl) were out of criteria for ALI samples #0307972 and #0307982. The samples were rerun and analyzed and the surrogates were again recovered out of the required criteria.

"The laboratory has reviewed the quality assurance and quality control measurements for the sample analysis stated above."

T Gaydos

Theodore C. Gaydos
Technical Director

ACCREDITED LABORATORIES, INC.
TCLP VOLATILES ANALYSIS DATA

CASE NUMBER	1776	MATRIX	Leachate
SAMPLE NUMBER	0307966	DILUTION FACTOR	10
DATA FILE	>C8839	DATE EXTRACTED	
CLIENT NAME	AWTES	DATE ANALYZED	08/22/03
FIELD ID	PDA	ANALYZED BY	JOSE

CAS No.	Compound	Result (mg/l)	MDL (mg/l)	Regulatory Level (mg/l)
71432	Benzene	U	.050	0.5
78933	2-Butanone	U	.100	200.0
56235	Carbon Tetrachloride	U	.050	0.5
108907	Chlorobenzene	U	.050	100.0
67663	Chloroform	U	.050	6.0
75354	1,1-Dichloroethene	U	.050	0.7
107062	1,2-Dichloroethane	U	.050	0.5
127184	Tetrachloroethene	U	.050	0.7
79016	Trichloroethene	U	.050	0.5
75014	Vinyl Chloride	U	.100	0.2

SURROGATE COMPOUNDS	RECOVERY	LIMITS	STATUS
1,2-Dichloroethane-d4	95 %	76 - 114	OK
Toluene-d8	100 %	88 - 110	OK
Bromofluorobenzene	109 %	86 - 115	OK

(U) Indicates compound was analyzed for but not detected.
E - Indicates result exceeds highest calibration standard.
D - Indicates result is based on a dilution.

* 2-Butanone = Methyl ethyl ketone

ACCREDITED LABORATORIES, INC.
TCLP VOLATILES ANALYSIS DATA

CASE NUMBER	1776	MATRIX	Leachate
SAMPLE NUMBER	0307967	DILUTION FACTOR	10
DATA FILE	>C8840	DATE EXTRACTED	
CLIENT NAME	AWTES	DATE ANALYZED	08/22/03
FIELD ID	PEA	ANALYZED BY	JOSE

CAS No.	Compound	Result (mg/l)	MDL (mg/l)	Regulatory Level (mg/l)
71432	Benzene	U	.050	0.5
78933	2-Butanone	U	.100	200.0
56235	Carbon Tetrachloride	U	.050	0.5
108907	Chlorobenzene	U	.050	100.0
67663	Chloroform	U	.050	6.0
75354	1,1-Dichloroethene	U	.050	0.7
107062	1,2-Dichloroethane	U	.050	0.5
127184	Tetrachloroethene	U	.050	0.7
79016	Trichloroethene	U	.050	0.5
75014	Vinyl Chloride	U	.100	0.2

SURROGATE COMPOUNDS	RECOVERY	LIMITS	STATUS
1,2-Dichloroethane-d4	94 %	76 - 114	OK
Toluene-d8	102 %	88 - 110	OK
Bromofluorobenzene	111 %	86 - 115	OK

(U) Indicates compound was analyzed for but not detected.
E - Indicates result exceeds highest calibration standard.
D - Indicates result is based on a dilution.

* 2-Butanone = Methyl ethyl ketone

ACCREDITED LABORATORIES, INC.
TCLP VOLATILES ANALYSIS DATA

CASE NUMBER	1776	MATRIX	Leachate
SAMPLE NUMBER	0307968	DILUTION FACTOR	10
DATA FILE	>C8842	DATE EXTRACTED	
CLIENT NAME	AWTES	DATE ANALYZED	08/22/03
FIELD ID	PFA	ANALYZED BY	JOSE

CAS No.	Compound	Result (mg/l)	MDL (mg/l)	Regulatory Level (mg/l)
71432	Benzene	U	.050	0.5
78933	2-Butanone	U	.100	200.0
56235	Carbon Tetrachloride	U	.050	0.5
108907	Chlorobenzene	U	.050	100.0
67663	Chloroform	U	.050	6.0
75354	1,1-Dichloroethene	U	.050	0.7
107062	1,2-Dichloroethane	U	.050	0.5
127184	Tetrachloroethene	U	.050	0.7
79016	Trichloroethene	U	.050	0.5
75014	Vinyl Chloride	U	.100	0.2

SURROGATE COMPOUNDS	RECOVERY	LIMITS	STATUS
1,2-Dichloroethane-d4	94 %	76 - 114	OK
Toluene-d8	100 %	88 - 110	OK
Bromofluorobenzene	109 %	86 - 115	OK

(U) Indicates compound was analyzed for but not detected.
E - Indicates result exceeds highest calibration standard.
D - Indicates result is based on a dilution.

* 2-Butanone = Methyl ethyl ketone

ACCREDITED LABORATORIES, INC.
TCLP VOLATILES ANALYSIS DATA

CASE NUMBER	1776	MATRIX	Leachate
SAMPLE NUMBER	0307969	DILUTION FACTOR	10
DATA FILE	>C8843	DATE EXTRACTED	
CLIENT NAME	AWTES	DATE ANALYZED	08/22/03
FIELD ID	PHA	ANALYZED BY	JOSE

CAS No.	Compound	Result (mg/l)	MDL (mg/l)	Regulatory Level (mg/l)
71432	Benzene	U	.050	0.5
78933	2-Butanone	U	.100	200.0
56235	Carbon Tetrachloride	U	.050	0.5
108907	Chlorobenzene	U	.050	100.0
67663	Chloroform	U	.050	6.0
75354	1,1-Dichloroethene	U	.050	0.7
107062	1,2-Dichloroethane	U	.050	0.5
127184	Tetrachloroethene	U	.050	0.7
79016	Trichloroethene	U	.050	0.5
75014	Vinyl Chloride	U	.100	0.2

SURROGATE COMPOUNDS	RECOVERY	LIMITS	STATUS
1,2-Dichloroethane-d4	96 %	76 - 114	OK
Toluene-d8	100 %	88 - 110	OK
Bromofluorobenzene	108 %	86 - 115	OK

(U) Indicates compound was analyzed for but not detected.
E - Indicates result exceeds highest calibration standard.
D - Indicates result is based on a dilution.

* 2-Butanone = Methyl ethyl ketone

ACCREDITED LABORATORIES, INC.
TCLP VOLATILES ANALYSIS DATA

CASE NUMBER	1776	MATRIX	Leachate
SAMPLE NUMBER	0307970	DILUTION FACTOR	10
DATA FILE	>C8851	DATE EXTRACTED	
CLIENT NAME	AWTES	DATE ANALYZED	08/25/03
FIELD ID	P17A	ANALYZED BY	JOSE

CAS No.	Compound	Result (mg/l)	MDL (mg/l)	Regulatory Level (mg/l)
71432	Benzene	U	.050	0.5
78933	2-Butanone	U	.100	200.0
56235	Carbon Tetrachloride	U	.050	0.5
108907	Chlorobenzene	U	.050	100.0
67663	Chloroform	U	.050	6.0
75354	1,1-Dichloroethene	U	.050	0.7
107062	1,2-Dichloroethane	U	.050	0.5
127184	Tetrachloroethene	U	.050	0.7
79016	Trichloroethene	U	.050	0.5
75014	Vinyl Chloride	U	.100	0.2

SURROGATE COMPOUNDS	RECOVERY	LIMITS	STATUS
1,2-Dichloroethane-d4	90 %	76 - 114	OK
Toluene-d8	99 %	88 - 110	OK
Bromofluorobenzene	104 %	86 - 115	OK

(U) Indicates compound was analyzed for but not detected.
E - Indicates result exceeds highest calibration standard.
D - Indicates result is based on a dilution.

* 2-Butanone = Methyl ethyl ketone

ACCREDITED LABORATORIES, INC.
TCLP VOLATILES ANALYSIS DATA

CASE NUMBER	1776	MATRIX	Leachate
SAMPLE NUMBER	0307971	DILUTION FACTOR	10
DATA FILE	>C8852	DATE EXTRACTED	
CLIENT NAME	AWTES	DATE ANALYZED	08/25/03
FIELD ID	P23A	ANALYZED BY	JOSE

CAS No.	Compound	Result (mg/l)	MDL (mg/l)	Regulatory Level (mg/l)
71432	Benzene	U	.050	0.5
78933	2-Butanone	U	.100	200.0
56235	Carbon Tetrachloride	U	.050	0.5
108907	Chlorobenzene	U	.050	100.0
67663	Chloroform	U	.050	6.0
75354	1,1-Dichloroethene	U	.050	0.7
107062	1,2-Dichloroethane	U	.050	0.5
127184	Tetrachloroethene	U	.050	0.7
79016	Trichloroethene	U	.050	0.5
75014	Vinyl Chloride	U	.100	0.2

SURROGATE COMPOUNDS	RECOVERY	LIMITS	STATUS
1,2-Dichloroethane-d4	89 %	76 - 114	OK
Toluene-d8	98 %	88 - 110	OK
Bromofluorobenzene	102 %	86 - 115	OK

(U) Indicates compound was analyzed for but not detected.
E - Indicates result exceeds highest calibration standard.
D - Indicates result is based on a dilution.

* 2-Butanone = Methyl ethyl ketone

ACCREDITED LABORATORIES, INC.
TCLP VOLATILES ANALYSIS DATA

CASE NUMBER	1776	MATRIX	Leachate
SAMPLE NUMBER	0307972	DILUTION FACTOR	10
DATA FILE	>C8853	DATE EXTRACTED	
CLIENT NAME	AWTES	DATE ANALYZED	08/25/03
FIELD ID	P25A	ANALYZED BY	JOSE

CAS No.	Compound	Result (mg/l)	MDL (mg/l)	Regulatory Level (mg/l)
71432	Benzene	U	.050	0.5
78933	2-Butanone	U	.100	200.0
56235	Carbon Tetrachloride	U	.050	0.5
108907	Chlorobenzene	U	.050	100.0
67663	Chloroform	U	.050	6.0
75354	1,1-Dichloroethene	U	.050	0.7
107062	1,2-Dichloroethane	U	.050	0.5
127184	Tetrachloroethene	U	.050	0.7
79016	Trichloroethene	U	.050	0.5
75014	Vinyl Chloride	U	.100	0.2

SURROGATE COMPOUNDS	RECOVERY	LIMITS	STATUS
1,2-Dichloroethane-d4	90 %	76 - 114	OK
Toluene-d8	99 %	88 - 110	OK
Bromofluorobenzene	103 %	86 - 115	OK

(U) Indicates compound was analyzed for but not detected.
E - Indicates result exceeds highest calibration standard.
D - Indicates result is based on a dilution.

* 2-Butanone = Methyl ethyl ketone

11

ACCREDITED LABORATORIES, INC.
TCLP VOLATILES ANALYSIS DATA

CASE NUMBER	1776	MATRIX	Leachate
SAMPLE NUMBER	0307973	DILUTION FACTOR	10
DATA FILE	>C8854	DATE EXTRACTED	
CLIENT NAME	AWTES	DATE ANALYZED	08/25/03
FIELD ID	P26A	ANALYZED BY	JOSE

CAS No.	Compound	Result (mg/l)	MDL (mg/l)	Regulatory Level (mg/l)
71432	Benzene	U	.050	0.5
78933	2-Butanone	U	.100	200.0
56235	Carbon Tetrachloride	U	.050	0.5
108907	Chlorobenzene	U	.050	100.0
67663	Chloroform	U	.050	6.0
75354	1,1-Dichloroethene	U	.050	0.7
107062	1,2-Dichloroethane	U	.050	0.5
127184	Tetrachloroethene	U	.050	0.7
79016	Trichloroethene	U	.050	0.5
75014	Vinyl Chloride	U	.100	0.2

SURROGATE COMPOUNDS	RECOVERY	LIMITS	STATUS
1,2-Dichloroethane-d4	91 %	76 - 114	OK
Toluene-d8	99 %	88 - 110	OK
Bromofluorobenzene	102 %	86 - 115	OK

(U) Indicates compound was analyzed for but not detected.
E - Indicates result exceeds highest calibration standard.
D - Indicates result is based on a dilution.

* 2-Butanone = Methyl ethyl ketone

ACCREDITED LABORATORIES, INC.
TCLP VOLATILES ANALYSIS DATA

CASE NUMBER	1776	MATRIX	Leachate
SAMPLE NUMBER	0307974	DILUTION FACTOR	10
DATA FILE	>C8855	DATE EXTRACTED	
CLIENT NAME	AWTES	DATE ANALYZED	08/25/03
FIELD ID	P28A	ANALYZED BY	JOSE

CAS No.	Compound	Result (mg/l)	MDL (mg/l)	Regulatory Level (mg/l)
71432	Benzene	U	.050	0.5
78933	2-Butanone	U	.100	200.0
56235	Carbon Tetrachloride	U	.050	0.5
108907	Chlorobenzene	U	.050	100.0
67663	Chloroform	U	.050	6.0
75354	1,1-Dichloroethene	U	.050	0.7
107062	1,2-Dichloroethane	U	.050	0.5
127184	Tetrachloroethene	U	.050	0.7
79016	Trichloroethene	U	.050	0.5
75014	Vinyl Chloride	U	.100	0.2

SURROGATE COMPOUNDS	RECOVERY	LIMITS	STATUS
1,2-Dichloroethane-d4	92 %	76 - 114	OK
Toluene-d8	99 %	88 - 110	OK
Bromofluorobenzene	104 %	86 - 115	OK

(U) Indicates compound was analyzed for but not detected.
E - Indicates result exceeds highest calibration standard.
D - Indicates result is based on a dilution.

* 2-Butanone = Methyl ethyl ketone

ACCREDITED LABORATORIES, INC.
TCLP VOLATILES ANALYSIS DATA

CASE NUMBER	1776	MATRIX	Leachate
SAMPLE NUMBER	0307975	DILUTION FACTOR	10
DATA FILE	>C8856	DATE EXTRACTED	
CLIENT NAME	AWTES	DATE ANALYZED	08/25/03
FIELD ID	P42A	ANALYZED BY	JOSE

CAS No.	Compound	Result (mg/l)	MDL (mg/l)	Regulatory Level (mg/l)
71432	Benzene	U	.050	0.5
78933	2-Butanone	U	.100	200.0
56235	Carbon Tetrachloride	U	.050	0.5
108907	Chlorobenzene	U	.050	100.0
67663	Chloroform	U	.050	6.0
75354	1,1-Dichloroethene	U	.050	0.7
107062	1,2-Dichloroethane	U	.050	0.5
127184	Tetrachloroethene	U	.050	0.7
79016	Trichloroethene	U	.050	0.5
75014	Vinyl Chloride	U	.100	0.2

SURROGATE COMPOUNDS	RECOVERY	LIMITS	STATUS
1,2-Dichloroethane-d4	93 %	76 - 114	OK
Toluene-d8	97 %	88 - 110	OK
Bromofluorobenzene	102 %	86 - 115	OK

(U) Indicates compound was analyzed for but not detected.
E - Indicates result exceeds highest calibration standard.
D - Indicates result is based on a dilution.

* 2-Butanone = Methyl ethyl ketone

ACCREDITED LABORATORIES, INC.
TCLP VOLATILES ANALYSIS DATA

CASE NUMBER	1776	MATRIX	Leachate
SAMPLE NUMBER	0307976	DILUTION FACTOR	10
DATA FILE	>C3857	DATE EXTRACTED	
CLIENT NAME	AWTES	DATE ANALYZED	08/25/03
FIELD ID	PEB	ANALYZED BY	JOSE

CAS No.	Compound	Result (mg/l)	MDL (mg/l)	Regulatory Level (mg/l)
71432	Benzene	U	.050	0.5
78933	2-Butanone	U	.100	200.0
56235	Carbon Tetrachloride	U	.050	0.5
108907	Chlorobenzene	U	.050	100.0
67663	Chloroform	U	.050	6.0
75354	1,1-Dichloroethene	U	.050	0.7
107062	1,2-Dichloroethane	U	.050	0.5
127184	Tetrachloroethene	U	.050	0.7
79016	Trichloroethene	U	.050	0.5
75014	Vinyl Chloride	U	.100	0.2

SURROGATE COMPOUNDS	RECOVERY	LIMITS	STATUS
1,2-Dichloroethane-d4	92 %	76 - 114	OK
Toluene-d8	98 %	88 - 110	OK
Bromofluorobenzene	104 %	86 - 115	OK

(U) Indicates compound was analyzed for but not detected.
E - Indicates result exceeds highest calibration standard.
D - Indicates result is based on a dilution.

* 2-Butanone = Methyl ethyl ketone

15

ACCREDITED LABORATORIES, INC.
TCLP VOLATILES ANALYSIS DATA

CASE NUMBER	1776	MATRIX	Leachate
SAMPLE NUMBER	0307977	DILUTION FACTOR	10
DATA FILE	>C8858	DATE EXTRACTED	
CLIENT NAME	AWTES	DATE ANALYZED	08/25/03
FIELD ID	PHB	ANALYZED BY	JOSE

CAS No.	Compound	Result (mg/l)	MDL (mg/l)	Regulatory Level (mg/l)
71432	Benzene	U	.050	0.5
78933	2-Butanone	U	.100	200.0
56235	Carbon Tetrachloride	U	.050	0.5
108907	Chlorobenzene	U	.050	100.0
67663	Chloroform	U	.050	6.0
75354	1,1-Dichloroethene	U	.050	0.7
107062	1,2-Dichloroethane	U	.050	0.5
127184	Tetrachloroethene	U	.050	0.7
79016	Trichloroethene	U	.050	0.5
75014	Vinyl Chloride	U	.100	0.2

SURROGATE COMPOUNDS	RECOVERY	LIMITS	STATUS
1,2-Dichloroethane-d4	92 %	76 - 114	OK
Toluene-d8	98 %	88 - 110	OK
Bromofluorobenzene	100 %	86 - 115	OK

(U) Indicates compound was analyzed for but not detected.
E - Indicates result exceeds highest calibration standard.
D - Indicates result is based on a dilution.

* 2-Butanone = Methyl ethyl ketone

ACCREDITED LABORATORIES, INC.
TCLP VOLATILES ANALYSIS DATA

CASE NUMBER	1776	MATRIX	Leachate
SAMPLE NUMBER	0307978	DILUTION FACTOR	10
DATA FILE	>C8860	DATE EXTRACTED	
CLIENT NAME	AWTES	DATE ANALYZED	08/25/03
FIELD ID	P24	ANALYZED BY	JOSE

CAS No.	Compound	Result (mg/l)	MDL (mg/l)	Regulatory Level (mg/l)
71432	Benzene	U	.050	0.5
78933	2-Butanone	U	.100	200.0
56235	Carbon Tetrachloride	U	.050	0.5
108907	Chlorobenzene	U	.050	100.0
67663	Chloroform	U	.050	6.0
75354	1,1-Dichloroethene	U	.050	0.7
107062	1,2-Dichloroethane	U	.050	0.5
127184	Tetrachloroethene	U	.050	0.7
79016	Trichloroethene	U	.050	0.5
75014	Vinyl Chloride	U	.100	0.2

SURROGATE COMPOUNDS	RECOVERY	LIMITS	STATUS
1,2-Dichloroethane-d4	94 %	76 - 114	OK
Toluene-d8	100 %	88 - 110	OK
Bromofluorobenzene	106 %	86 - 115	OK

(U) Indicates compound was analyzed for but not detected.
E - Indicates result exceeds highest calibration standard.
D - Indicates result is based on a dilution.

* 2-Butanone = Methyl ethyl ketone

ACCREDITED LABORATORIES, INC.
TCLP VOLATILES ANALYSIS DATA

CASE NUMBER	1776	MATRIX	Leachate
SAMPLE NUMBER	0307979	DILUTION FACTOR	10
DATA FILE	>C8861	DATE EXTRACTED	
CLIENT NAME	AWTES	DATE ANALYZED	08/25/03
FIELD ID	P15A	ANALYZED BY	JOSE

CAS No.	Compound	Result (mg/l)	MDL (mg/l)	Regulatory Level (mg/l)
71432	Benzene	U	.050	0.5
78933	2-Butanone	U	.100	200.0
56235	Carbon Tetrachloride	U	.050	0.5
108907	Chlorobenzene	U	.050	100.0
67663	Chloroform	U	.050	6.0
75354	1,1-Dichloroethene	U	.050	0.7
107062	1,2-Dichloroethane	U	.050	0.5
127184	Tetrachloroethene	U	.050	0.7
79016	Trichloroethene	U	.050	0.5
75014	Vinyl Chloride	U	.100	0.2

SURROGATE COMPOUNDS	RECOVERY	LIMITS	STATUS
1,2-Dichloroethane-d4	95 %	76 - 114	OK
Toluene-d8	98 %	88 - 110	OK
Bromofluorobenzene	103 %	86 - 115	OK

(U) Indicates compound was analyzed for but not detected.
E - Indicates result exceeds highest calibration standard.
D - Indicates result is based on a dilution.

* 2-Butanone = Methyl ethyl ketone

ACCREDITED LABORATORIES, INC.
TCLP VOLATILES ANALYSIS DATA

CASE NUMBER	1776	MATRIX	Leachate
SAMPLE NUMBER	0307980	DILUTION FACTOR	10
DATA FILE	>C8862	DATE EXTRACTED	
CLIENT NAME	AWTES	DATE ANALYZED	08/25/03
FIELD ID	P27A	ANALYZED BY	JOSE

CAS No.	Compound	Result (mg/l)	MDL (mg/l)	Regulatory Level (mg/l)
71432	Benzene	U	.050	0.5
78933	2-Butanone	U	.100	200.0
56235	Carbon Tetrachloride	U	.050	0.5
108907	Chlorobenzene	U	.050	100.0
67663	Chloroform	U	.050	6.0
75354	1,1-Dichloroethene	U	.050	0.7
107062	1,2-Dichloroethane	U	.050	0.5
127184	Tetrachloroethene	U	.050	0.7
79016	Trichloroethene	U	.050	0.5
75014	Vinyl Chloride	U	.100	0.2

SURROGATE COMPOUNDS	RECOVERY	LIMITS	STATUS
1,2-Dichloroethane-d4	94 %	76 - 114	OK
Toluene-d8	99 %	88 - 110	OK
Bromofluorobenzene	104 %	86 - 115	OK

(U) Indicates compound was analyzed for but not detected.
E - Indicates result exceeds highest calibration standard.
D - Indicates result is based on a dilution.

* 2-Butanone = Methyl ethyl ketone

ACCREDITED LABORATORIES, INC.
TCLP VOLATILES ANALYSIS DATA

CASE NUMBER	1776	MATRIX	Leachate
SAMPLE NUMBER	0307981	DILUTION FACTOR	10
DATA FILE	>C8863	DATE EXTRACTED	
CLIENT NAME	AWTES	DATE ANALYZED	08/25/03
FIELD ID	P24A	ANALYZED BY	JOSE

CAS No.	Compound	Result (mg/l)	MDL (mg/l)	Regulatory Level (mg/l)
71432	Benzene	U	.050	0.5
78933	2-Butanone	U	.100	200.0
56235	Carbon Tetrachloride	U	.050	0.5
108907	Chlorobenzene	U	.050	100.0
67663	Chloroform	U	.050	6.0
75354	1,1-Dichloroethene	U	.050	0.7
107062	1,2-Dichloroethane	U	.050	0.5
127184	Tetrachloroethene	U	.050	0.7
79016	Trichloroethene	U	.050	0.5
75014	Vinyl Chloride	U	.100	0.2

SURROGATE COMPOUNDS	RECOVERY	LIMITS	STATUS
1,2-Dichloroethane-d4	93 %	76 - 114	OK
Toluene-d8	98 %	88 - 110	OK
Bromofluorobenzene	102 %	86 - 115	OK

(U) Indicates compound was analyzed for but not detected.
E - Indicates result exceeds highest calibration standard.
D - Indicates result is based on a dilution.

* 2-Butanone = Methyl ethyl ketone

ACCREDITED LABORATORIES, INC.
TCLP VOLATILES ANALYSIS DATA

CASE NUMBER	1776	MATRIX	Leachate
SAMPLE NUMBER	0307982	DILUTION FACTOR	10
DATA FILE	>C8864	DATE EXTRACTED	
CLIENT NAME	AWTES	DATE ANALYZED	08/25/03
FIELD ID	PCA	ANALYZED BY	JOSE

CAS No.	Compound	Result (mg/l)	MDL (mg/l)	Regulatory Level (mg/l)
71432	Benzene	U	.050	0.5
78933	2-Butanone	U	.100	200.0
56235	Carbon Tetrachloride	U	.050	0.5
108907	Chlorobenzene	U	.050	100.0
67663	Chloroform	U	.050	6.0
75354	1,1-Dichloroethene	U	.050	0.7
107062	1,2-Dichloroethane	U	.050	0.5
127184	Tetrachloroethene	U	.050	0.7
79016	Trichloroethene	U	.050	0.5
75014	Vinyl Chloride	U	.100	0.2

SURROGATE COMPOUNDS	RECOVERY	LIMITS	STATUS
1,2-Dichloroethane-d4	94 %	76 - 114	OK
Toluene-d8	99 %	88 - 110	OK
Bromofluorobenzene	106 %	86 - 115	OK

(U) Indicates compound was analyzed for but not detected.
E - Indicates result exceeds highest calibration standard.
D - Indicates result is based on a dilution.

* 2-Butanone = Methyl ethyl ketone

ACCREDITED LABORATORIES, INC.
TCLP VOLATILES ANALYSIS DATA

CASE NUMBER		MATRIX	Leachate
SAMPLE NUMBER	VBLKC89	DILUTION FACTOR	1
DATA FILE	>C8828	DATE EXTRACTED	
CLIENT NAME		DATE ANALYZED	08/22/03
FIELD ID		ANALYZED BY	JOSE

CAS No.	Compound	Result (mg/l)	MDL (mg/l)	Regulatory Level (mg/l)
71432	Benzene	U	.005	0.5
78933	2-Butanone	U	.010	200.0
56235	Carbon Tetrachloride	U	.005	0.5
108907	Chlorobenzene	U	.005	100.0
67663	Chloroform	U	.005	6.0
75354	1,1-Dichloroethene	U	.005	0.7
107062	1,2-Dichloroethane	U	.005	0.5
127184	Tetrachloroethene	U	.005	0.7
79016	Trichloroethene	U	.005	0.5
75014	Vinyl Chloride	U	.010	0.2

SURROGATE COMPOUNDS	RECOVERY	LIMITS	STATUS
1,2-Dichloroethane-d4	91 %	76 - 114	OK
Toluene-d8	100 %	88 - 110	OK
Bromofluorobenzene	109 %	86 - 115	OK

(U) Indicates compound was analyzed for but not detected.
E - Indicates result exceeds highest calibration standard.
D - Indicates result is based on a dilution.

* 2-Butanone = Methyl ethyl ketone

ACCREDITED LABORATORIES, INC.
TCLP VOLATILES ANALYSIS DATA

CASE NUMBER		MATRIX	Leachate
SAMPLE NUMBER	VBLKC90	DILUTION FACTOR	1
DATA FILE	>C8850	DATE EXTRACTED	
CLIENT NAME		DATE ANALYZED	08/25/03
FIELD ID		ANALYZED BY	JOSE

CAS No.	Compound	Result (mg/l)	MDL (mg/l)	Regulatory Level (mg/l)
71432	Benzene	U	.005	0.5
78933	2-Butanone	U	.010	200.0
56235	Carbon Tetrachloride	U	.005	0.5
108907	Chlorobenzene	U	.005	100.0
67663	Chloroform	U	.005	6.0
75354	1,1-Dichloroethene	U	.005	0.7
107062	1,2-Dichloroethane	U	.005	0.5
127184	Tetrachloroethene	U	.005	0.7
79016	Trichloroethene	U	.005	0.5
75014	Vinyl Chloride	U	.010	0.2

SURROGATE COMPOUNDS	RECOVERY	LIMITS	STATUS
1,2-Dichloroethane-d4	87 %	76 - 114	OK
Toluene-d8	96 %	88 - 110	OK
Bromofluorobenzene	103 %	86 - 115	OK

(U) Indicates compound was analyzed for but not detected.
E - Indicates result exceeds highest calibration standard.
D - Indicates result is based on a dilution.

* 2-Butanone = Methyl ethyl ketone

ACCREDITED LABORATORIES, INC.
TCLP SEMIVOLATILES ANALYSIS DATA

CASE NUMBER	1776	MATRIX	Leachate
SAMPLE NUMBER	0307966	DILUTION FACTOR	10
DATA FILE	>B8153	DATE EXTRACTED	08/26/03
CLIENT NAME	AWTES	DATE ANALYZED	08/27/03
FIELD ID	PDA	ANALYZED BY	WILLIAM

CAS No.	Compound	Result (mg/l)	MDL (mg/l)	Regulatory Level (mg/l)
110861	Pyridine	U	.10	5.0
106467	1,4-Dichlorobenzene	U	.10	7.5
95478	2-Methylphenol	U	.10	200.0
108394	3&4-Methylphenol	U	.10	200.0
67721	Hexachloroethane	U	.10	3.0
98953	Nitrobenzene	U	.10	2.0
87683	Hexachlorobutadiene	U	.10	0.5
88062	2,4,6-Trichlorophenol	U	.10	2.0
95954	2,4,5-Trichlorophenol	U	.50	400.0
121142	2,4-Dinitrotoluene	U	.10	0.13
118741	Hexachlorobenzene	U	.10	0.13
87865	Pentachlorophenol	U	.10	100.0

SURROGATE COMPOUNDS	RECOVERY	LIMITS	STATUS
2-Fluorophenol	58 %	21 - 100	OK
Phenol-d5	61 %	10 - 94	OK
Nitrobenzene-d5	62 %	35 - 114	OK
2-Fluorobiphenyl	67 %	43 - 116	OK
2,4,6-Tribromophenol	117 %	10 - 123	OK
Terphenyl-d14	105 %	33 - 141	OK

U - Indicates compound was analyzed for but not detected.
E - Indicates result exceeds highest calibration standard.
D - Indicates result is based on a dilution.

* 2-Methylphenol = o-cresol
* 3-Methylphenol = m-cresol
* 4-Methylphenol = p-cresol

** 3-Methylphenol and 4-Methylphenol can not be separated by the method applied.

ACCREDITED LABORATORIES, INC.
TCLP SEMIVOLATILES ANALYSIS DATA

CASE NUMBER	1776	MATRIX	Leachate
SAMPLE NUMBER	0307967	DILUTION FACTOR	10
DATA FILE	>B8154	DATE EXTRACTED	08/26/03
CLIENT NAME	AWTES	DATE ANALYZED	08/27/03
FIELD ID	PEA	ANALYZED BY	WILLIAM

CAS No.	Compound	Result (mg/l)	MDL (mg/l)	Regulatory Level (mg/l)
110861	Pyridine	U	.10	5.0
106467	1,4-Dichlorobenzene	U	.10	7.5
95478	2-Methylphenol	U	.10	200.0
108394	3&4-Methylphenol	U	.10	200.0
67721	Hexachloroethane	U	.10	3.0
98953	Nitrobenzene	U	.10	2.0
87683	Hexachlorobutadiene	U	.10	0.5
88062	2,4,6-Trichlorophenol	U	.10	2.0
95954	2,4,5-Trichlorophenol	U	.50	400.0
121142	2,4-Dinitrotoluene	U	.10	0.13
118741	Hexachlorobenzene	U	.10	0.13
87865	Pentachlorophenol	U	.10	100.0

SURROGATE COMPOUNDS	RECOVERY	LIMITS	STATUS
2-Fluorophenol	39 %	21 - 100	OK
Phenol-d5	40 %	10 - 94	OK
Nitrobenzene-d5	48 %	35 - 114	OK
2-Fluorobiphenyl	47 %	43 - 116	OK
2,4,6-Tribromophenol	77 %	10 - 123	OK
Terphenyl-d14	90 %	33 - 141	OK

U - Indicates compound was analyzed for but not detected.
E - Indicates result exceeds highest calibration standard.
D - Indicates result is based on a dilution.

* 2-Methylphenol = o-cresol
* 3-Methylphenol = m-cresol
* 4-Methylphenol = p-cresol

** 3-Methylphenol and 4-Methylphenol can not be separated by the method applied.

ACCREDITED LABORATORIES, INC.
TCLP SEMIVOLATILES ANALYSIS DATA

CASE NUMBER	1776	MATRIX	Leachate
SAMPLE NUMBER	0307968	DILUTION FACTOR	10
DATA FILE	>B8155	DATE EXTRACTED	08/26/03
CLIENT NAME	AWTES	DATE ANALYZED	08/27/03
FIELD ID	PFA	ANALYZED BY	WILLIAM

CAS No.	Compound	Result (mg/l)	MDL (mg/l)	Regulatory Level (mg/l)
110861	Pyridine	U	.10	5.0
106467	1,4-Dichlorobenzene	U	.10	7.5
95478	2-Methylphenol	U	.10	200.0
108394	3&4-Methylphenol	U	.10	200.0
67721	Hexachloroethane	U	.10	3.0
98953	Nitrobenzene	U	.10	2.0
87683	Hexachlorobutadiene	U	.10	0.5
88062	2,4,6-Trichlorophenol	U	.10	2.0
95954	2,4,5-Trichlorophenol	U	.50	400.0
121142	2,4-Dinitrotoluene	U	.10	0.13
118741	Hexachlorobenzene	U	.10	0.13
87865	Pentachlorophenol	U	.10	100.0

SURROGATE COMPOUNDS	RECOVERY	LIMITS	STATUS
2-Fluorophenol	38 %	21 - 100	OK
Phenol-d5	37 %	10 - 94	OK
Nitrobenzene-d5	49 %	35 - 114	OK
2-Fluorobiphenyl	49 %	43 - 116	OK
2,4,6-Tribromophenol	71 %	10 - 123	OK
Terphenyl-d14	84 %	33 - 141	OK

U - Indicates compound was analyzed for but not detected.
E - Indicates result exceeds highest calibration standard.
D - Indicates result is based on a dilution.

* 2-Methylphenol = o-cresol
* 3-Methylphenol = m-cresol
* 4-Methylphenol = p-cresol

** 3-Methylphenol and 4-Methylphenol can not be separated by the method applied.

ACCREDITED LABORATORIES, INC.
TCLP SEMIVOLATILES ANALYSIS DATA

CASE NUMBER	1776	MATRIX	Leachate
SAMPLE NUMBER	0307969	DILUTION FACTOR	10
DATA FILE	>B8156	DATE EXTRACTED	08/26/03
CLIENT NAME	AWTES	DATE ANALYZED	08/27/03
FIELD ID	PHA	ANALYZED BY	WILLIAM

CAS No.	Compound	Result (mg/l)	MDL (mg/l)	Regulatory Level (mg/l)
110861	Pyridine	U	.10	5.0
106467	1,4-Dichlorobenzene	U	.10	7.5
95478	2-Methylphenol	U	.10	200.0
108394	3&4-Methylphenol	U	.10	200.0
67721	Hexachloroethane	U	.10	3.0
98953	Nitrobenzene	U	.10	2.0
87683	Hexachlorobutadiene	U	.10	0.5
88062	2,4,6-Trichlorophenol	U	.10	2.0
95954	2,4,5-Trichlorophenol	U	.50	400.0
121142	2,4-Dinitrotoluene	U	.10	0.13
118741	Hexachlorobenzene	U	.10	0.13
87865	Pentachlorophenol	U	.10	100.0

SURROGATE COMPOUNDS	RECOVERY	LIMITS	STATUS
2-Fluorophenol	51 %	21 - 100	OK
Phenol-d5	51 %	10 - 94	OK
Nitrobenzene-d5	54 %	35 - 114	OK
2-Fluorobiphenyl	54 %	43 - 116	OK
2,4,6-Tribromophenol	90 %	10 - 123	OK
Terphenyl-d14	93 %	33 - 141	OK

U - Indicates compound was analyzed for but not detected.
E - Indicates result exceeds highest calibration standard.
D - Indicates result is based on a dilution.

* 2-Methylphenol = o-cresol
* 3-Methylphenol = m-cresol
* 4-Methylphenol = p-cresol

** 3-Methylphenol and 4-Methylphenol can not be separated by the method applied.

ACCREDITED LABORATORIES, INC.
TCLP SEMIVOLATILES ANALYSIS DATA

CASE NUMBER	1776	MATRIX	Leachate
SAMPLE NUMBER	0307970	DILUTION FACTOR	10
DATA FILE	>B8157	DATE EXTRACTED	08/26/03
CLIENT NAME	AWTES	DATE ANALYZED	08/27/03
FIELD ID	P17A	ANALYZED BY	WILLIAM

CAS No.	Compound	Result (mg/l)	MDL (mg/l)	Regulatory Level (mg/l)
110861	Pyridine	U	.10	5.0
106467	1,4-Dichlorobenzene	U	.10	7.5
95478	2-Methylphenol	U	.10	200.0
108394	3&4-Methylphenol	U	.10	200.0
67721	Hexachloroethane	U	.10	3.0
98953	Nitrobenzene	U	.10	2.0
87683	Hexachlorobutadiene	U	.10	0.5
88062	2,4,6-Trichlorophenol	U	.10	2.0
95954	2,4,5-Trichlorophenol	U	.50	400.0
121142	2,4-Dinitrotoluene	U	.10	0.13
118741	Hexachlorobenzene	U	.10	0.13
87865	Pentachlorophenol	U	.10	100.0

SURROGATE COMPOUNDS	RECOVERY	LIMITS	STATUS
2-Fluorophenol	43 %	21 - 100	OK
Phenol-d5	41 %	10 - 94	OK
Nitrobenzene-d5	51 %	35 - 114	OK
2-Fluorobiphenyl	51 %	43 - 116	OK
2,4,6-Tribromophenol	74 %	10 - 123	OK
Terphenyl-d14	93 %	33 - 141	OK

U - Indicates compound was analyzed for but not detected.
E - Indicates result exceeds highest calibration standard.
D - Indicates result is based on a dilution.

* 2-Methylphenol = o-cresol
* 3-Methylphenol = m-cresol
* 4-Methylphenol = p-cresol

** 3-Methylphenol and 4-Methylphenol can not be separated by the method applied.

ACCREDITED LABORATORIES, INC.
TCLP SEMIVOLATILES ANALYSIS DATA

CASE NUMBER	1776	MATRIX	Leachate
SAMPLE NUMBER	0307971	DILUTION FACTOR	10
DATA FILE	>B8158	DATE EXTRACTED	08/26/03
CLIENT NAME	AWTES	DATE ANALYZED	08/27/03
FIELD ID	P23A	ANALYZED BY	WILLIAM

CAS No.	Compound	Result (mg/l)	MDL (mg/l)	Regulatory Level (mg/l)
110861	Pyridine	U	.10	5.0
106467	1,4-Dichlorobenzene	U	.10	7.5
95478	2-Methylphenol	U	.10	200.0
108394	3&4-Methylphenol	U	.10	200.0
67721	Hexachloroethane	U	.10	3.0
98953	Nitrobenzene	U	.10	2.0
87683	Hexachlorobutadiene	U	.10	0.5
88062	2,4,6-Trichlorophenol	U	.10	2.0
95954	2,4,5-Trichlorophenol	U	.50	400.0
121142	2,4-Dinitrotoluene	U	.10	0.13
118741	Hexachlorobenzene	U	.10	0.13
87865	Pentachlorophenol	U	.10	100.0

SURROGATE COMPOUNDS	RECOVERY	LIMITS	STATUS
2-Fluorophenol	38 %	21 - 100	OK
Phenol-d5	37 %	10 - 94	OK
Nitrobenzene-d5	40 %	35 - 114	OK
2-Fluorobiphenyl	40 %	43 - 116	OUT
2,4,6-Tribromophenol	69 %	10 - 123	OK
Terphenyl-d14	88 %	33 - 141	OK

U - Indicates compound was analyzed for but not detected.
E - Indicates result exceeds highest calibration standard.
D - Indicates result is based on a dilution.

* 2-Methylphenol = o-cresol
* 3-Methylphenol = m-cresol
* 4-Methylphenol = p-cresol

** 3-Methylphenol and 4-Methylphenol can not be separated by the method applied.

ACCREDITED LABORATORIES, INC.
TCLP SEMIVOLATILES ANALYSIS DATA

CASE NUMBER	1776	MATRIX	Leachate
SAMPLE NUMBER	0307972	DILUTION FACTOR	10
DATA FILE	>B8159	DATE EXTRACTED	08/26/03
CLIENT NAME	AWTES	DATE ANALYZED	08/27/03
FIELD ID	P25A	ANALYZED BY	WILLIAM

CAS No.	Compound	Result (mg/l)	MDL (mg/l)	Regulatory Level (mg/l)
110861	Pyridine	U	.10	5.0
106467	1,4-Dichlorobenzene	U	.10	7.5
95478	2-Methylphenol	U	.10	200.0
108394	3&4-Methylphenol	U	.10	200.0
67721	Hexachloroethane	U	.10	3.0
98953	Nitrobenzene	U	.10	2.0
87683	Hexachlorobutadiene	U	.10	0.5
88062	2,4,6-Trichlorophenol	U	.10	2.0
95954	2,4,5-Trichlorophenol	U	.50	400.0
121142	2,4-Dinitrotoluene	U	.10	0.13
118741	Hexachlorobenzene	U	.10	0.13
87865	Pentachlorophenol	U	.10	100.0

SURROGATE COMPOUNDS	RECOVERY	LIMITS	STATUS
2-Fluorophenol	26 %	21 - 100	OK
Phenol-d5	27 %	10 - 94	OK
Nitrobenzene-d5	32 %	35 - 114	OUT
2-Fluorobiphenyl	35 %	43 - 116	OUT
2,4,6-Tribromophenol	66 %	10 - 123	OK
Terphenyl-d14	91 %	33 - 141	OK

U - Indicates compound was analyzed for but not detected.
E - Indicates result exceeds highest calibration standard.
D - Indicates result is based on a dilution.

* 2-Methylphenol = o-cresol
* 3-Methylphenol = m-cresol
* 4-Methylphenol = p-cresol

** 3-Methylphenol and 4-Methylphenol can not be separated by the method applied.

ACCREDITED LABORATORIES, INC.
TCLP SEMIVOLATILES ANALYSIS DATA

CASE NUMBER	1776	MATRIX	Leachate
SAMPLE NUMBER	0307972	DILUTION FACTOR	10
DATA FILE	>B8169	DATE EXTRACTED	08/26/03
CLIENT NAME	AWTES	DATE ANALYZED	08/28/03
FIELD ID	P25A	ANALYZED BY	WILLIAM

CAS No.	Compound	Result (mg/l)	MDL (mg/l)	Regulatory Level (mg/l)
110861	Pyridine	U	.10	5.0
106467	1,4-Dichlorobenzene	U	.10	7.5
95478	2-Methylphenol	U	.10	200.0
108394	3&4-Methylphenol	U	.10	200.0
67721	Hexachloroethane	U	.10	3.0
98953	Nitrobenzene	U	.10	2.0
87683	Hexachlorobutadiene	U	.10	0.5
88062	2,4,6-Trichlorophenol	U	.10	2.0
95954	2,4,5-Trichlorophenol	U	.50	400.0
121142	2,4-Dinitrotoluene	U	.10	0.13
118741	Hexachlorobenzene	U	.10	0.13
87865	Pentachlorophenol	U	.10	100.0

SURROGATE COMPOUNDS	RECOVERY	LIMITS	STATUS
2-Fluorophenol	24 %	21 - 100	OK
Phenol-d5	27 %	10 - 94	OK
Nitrobenzene-d5	32 %	35 - 114	OUT
2-Fluorobiphenyl	33 %	43 - 116	OUT
2,4,6-Tribromophenol	72 %	10 - 123	OK
Terphenyl-d14	82 %	33 - 141	OK

U - Indicates compound was analyzed for but not detected.
E - Indicates result exceeds highest calibration standard.
D - Indicates result is based on a dilution.

* 2-Methylphenol = o-cresol
* 3-Methylphenol = m-cresol
* 4-Methylphenol = p-cresol

** 3-Methylphenol and 4-Methylphenol can not be separated by the method applied.

ACCREDITED LABORATORIES, INC.
TCLP SEMIVOLATILES ANALYSIS DATA

CASE NUMBER	1776	MATRIX	Leachate
SAMPLE NUMBER	0307973	DILUTION FACTOR	10
DATA FILE	>B8160	DATE EXTRACTED	08/26/03
CLIENT NAME	AWTES	DATE ANALYZED	08/27/03
FIELD ID	P26A	ANALYZED BY	WILLIAM

CAS No.	Compound	Result (mg/l)	MDL (mg/l)	Regulatory Level (mg/l)
110861	Pyridine	U	.10	5.0
106467	1,4-Dichlorobenzene	U	.10	7.5
95478	2-Methylphenol	U	.10	200.0
108394	3&4-Methylphenol	U	.10	200.0
67721	Hexachloroethane	U	.10	3.0
98953	Nitrobenzene	U	.10	2.0
87683	Hexachlorobutadiene	U	.10	0.5
88062	2,4,6-Trichlorophenol	U	.10	2.0
95954	2,4,5-Trichlorophenol	U	.50	400.0
121142	2,4-Dinitrotoluene	U	.10	0.13
118741	Hexachlorobenzene	U	.10	0.13
87865	Pentachlorophenol	U	.10	100.0

SURROGATE COMPOUNDS	RECOVERY	LIMITS	STATUS
2-Fluorophenol	17 %	21 - 100	OUT
Phenol-d5	17 %	10 - 94	OK
Nitrobenzene-d5	35 %	35 - 114	OK
2-Fluorobiphenyl	37 %	43 - 116	OUT
2,4,6-Tribromophenol	39 %	10 - 123	OK
Terphenyl-d14	82 %	33 - 141	OK

U - Indicates compound was analyzed for but not detected.
E - Indicates result exceeds highest calibration standard.
D - Indicates result is based on a dilution.

* 2-Methylphenol = o-cresol
* 3-Methylphenol = m-cresol
* 4-Methylphenol = p-cresol

** 3-Methylphenol and 4-Methylphenol can not be separated by the method applied.

ACCREDITED LABORATORIES, INC.
TCLP SEMIVOLATILES ANALYSIS DATA

CASE NUMBER	1776	MATRIX	Leachate
SAMPLE NUMBER	0307974	DILUTION FACTOR	10
DATA FILE	>B8161	DATE EXTRACTED	08/26/03
CLIENT NAME	AWTES	DATE ANALYZED	08/27/03
FIELD ID	P28A	ANALYZED BY	WILLIAM

CAS No.	Compound	Result (mg/l)	MDL (mg/l)	Regulatory Level (mg/l)
110861	Pyridine	U	.10	5.0
106467	1,4-Dichlorobenzene	U	.10	7.5
95478	2-Methylphenol	U	.10	200.0
108394	3&4-Methylphenol	U	.10	200.0
67721	Hexachloroethane	U	.10	3.0
98953	Nitrobenzene	U	.10	2.0
87683	Hexachlorobutadiene	U	.10	0.5
88062	2,4,6-Trichlorophenol	U	.10	2.0
95954	2,4,5-Trichlorophenol	U	.50	400.0
121142	2,4-Dinitrotoluene	U	.10	0.13
118741	Hexachlorobenzene	U	.10	0.13
87865	Pentachlorophenol	U	.10	100.0

SURROGATE COMPOUNDS	RECOVERY	LIMITS	STATUS
2-Fluorophenol	49 %	21 - 100	OK
Phenol-d5	52 %	10 - 94	OK
Nitrobenzene-d5	53 %	35 - 114	OK
2-Fluorobiphenyl	52 %	43 - 116	OK
2,4,6-Tribromophenol	84 %	10 - 123	OK
Terphenyl-d14	93 %	33 - 141	OK

U - Indicates compound was analyzed for but not detected.
E - Indicates result exceeds highest calibration standard.
D - Indicates result is based on a dilution.

* 2-Methylphenol = o-cresol
* 3-Methylphenol = m-cresol
* 4-Methylphenol = p-cresol

** 3-Methylphenol and 4-Methylphenol can not be separated by the method applied.

ACCREDITED LABORATORIES, INC.
TCLP SEMIVOLATILES ANALYSIS DATA

CASE NUMBER	1776	MATRIX	Leachate
SAMPLE NUMBER	0307975	DILUTION FACTOR	10
DATA FILE	>B8162	DATE EXTRACTED	08/26/03
CLIENT NAME	AWTES	DATE ANALYZED	08/27/03
FIELD ID	P42A	ANALYZED BY	WILLIAM

CAS No.	Compound	Result (mg/l)	MDL (mg/l)	Regulatory Level (mg/l)
110861	Pyridine	U	.10	5.0
106467	1,4-Dichlorobenzene	U	.10	7.5
95478	2-Methylphenol	U	.10	200.0
108394	3&4-Methylphenol	U	.10	200.0
67721	Hexachloroethane	U	.10	3.0
98953	Nitrobenzene	U	.10	2.0
87683	Hexachlorobutadiene	U	.10	0.5
88062	2,4,6-Trichlorophenol	U	.10	2.0
95954	2,4,5-Trichlorophenol	U	.50	400.0
121142	2,4-Dinitrotoluene	U	.10	0.13
118741	Hexachlorobenzene	U	.10	0.13
87865	Pentachlorophenol	U	.10	100.0

SURROGATE COMPOUNDS	RECOVERY	LIMITS	STATUS
2-Fluorophenol	34 %	21 - 100	OK
Phenol-d5	33 %	10 - 94	OK
Nitrobenzene-d5	48 %	35 - 114	OK
2-Fluorobiphenyl	49 %	43 - 116	OK
2,4,6-Tribromophenol	68 %	10 - 123	OK
Terphenyl-d14	95 %	33 - 141	OK

U - Indicates compound was analyzed for but not detected.
E - Indicates result exceeds highest calibration standard.
D - Indicates result is based on a dilution.

* 2-Methylphenol = o-cresol
* 3-Methylphenol = m-cresol
* 4-Methylphenol = p-cresol

** 3-Methylphenol and 4-Methylphenol can not be separated by the method applied.

ACCREDITED LABORATORIES, INC.
TCLP SEMIVOLATILES ANALYSIS DATA

CASE NUMBER	1776	MATRIX	Leachate
SAMPLE NUMBER	0307976	DILUTION FACTOR	10
DATA FILE	>B8163	DATE EXTRACTED	08/26/03
CLIENT NAME	AWTES	DATE ANALYZED	08/27/03
FIELD ID	PEB	ANALYZED BY	WILLIAM

CAS No.	Compound	Result (mg/l)	MDL (mg/l)	Regulatory Level (mg/l)
110861	Pyridine	U	.10	5.0
106467	1,4-Dichlorobenzene	U	.10	7.5
95478	2-Methylphenol	U	.10	200.0
108394	3&4-Methylphenol	U	.10	200.0
67721	Hexachloroethane	U	.10	3.0
98953	Nitrobenzene	U	.10	2.0
87683	Hexachlorobutadiene	U	.10	0.5
88062	2,4,6-Trichlorophenol	U	.10	2.0
95954	2,4,5-Trichlorophenol	U	.50	400.0
121142	2,4-Dinitrotoluene	U	.10	0.13
118741	Hexachlorobenzene	U	.10	0.13
87865	Pentachlorophenol	U	.10	100.0

SURROGATE COMPOUNDS	RECOVERY	LIMITS	STATUS
2-Fluorophenol	64 %	21 - 100	OK
Phenol-d5	60 %	10 - 94	OK
Nitrobenzene-d5	61 %	35 - 114	OK
2-Fluorobiphenyl	61 %	43 - 116	OK
2,4,6-Tribromophenol	91 %	10 - 123	OK
Terphenyl-d14	95 %	33 - 141	OK

U - Indicates compound was analyzed for but not detected.
E - Indicates result exceeds highest calibration standard.
D - Indicates result is based on a dilution.

* 2-Methylphenol = o-cresol
* 3-Methylphenol = m-cresol
* 4-Methylphenol = p-cresol

** 3-Methylphenol and 4-Methylphenol can not be separated by the method applied.

ACCREDITED LABORATORIES, INC.
TCLP SEMIVOLATILES ANALYSIS DATA

CASE NUMBER	1776	MATRIX	Leachate
SAMPLE NUMBER	0307977	DILUTION FACTOR	10
DATA FILE	>B8164	DATE EXTRACTED	08/26/03
CLIENT NAME	AWTES	DATE ANALYZED	08/27/03
FIELD ID	PHB	ANALYZED BY	WILLIAM

CAS No.	Compound	Result (mg/l)	MDL (mg/l)	Regulatory Level (mg/l)
110861	Pyridine	U	.10	5.0
106467	1,4-Dichlorobenzene	U	.10	7.5
95478	2-Methylphenol	U	.10	200.0
108394	3&4-Methylphenol	U	.10	200.0
67721	Hexachloroethane	U	.10	3.0
98953	Nitrobenzene	U	.10	2.0
87683	Hexachlorobutadiene	U	.10	0.5
88062	2,4,6-Trichlorophenol	U	.10	2.0
95954	2,4,5-Trichlorophenol	U	.50	400.0
121142	2,4-Dinitrotoluene	U	.10	0.13
118741	Hexachlorobenzene	U	.10	0.13
87865	Pentachlorophenol	U	.10	100.0

SURROGATE COMPOUNDS	RECOVERY	LIMITS	STATUS
2-Fluorophenol	49 %	21 - 100	OK
Phenol-d5	48 %	10 - 94	OK
Nitrobenzene-d5	50 %	35 - 114	OK
2-Fluorobiphenyl	49 %	43 - 116	OK
2,4,6-Tribromophenol	86 %	10 - 123	OK
Terphenyl-d14	98 %	33 - 141	OK

U - Indicates compound was analyzed for but not detected.
E - Indicates result exceeds highest calibration standard.
D - Indicates result is based on a dilution.

* 2-Methylphenol = o-cresol
* 3-Methylphenol = m-cresol
* 4-Methylphenol = p-cresol

** 3-Methylphenol and 4-Methylphenol can not be separated by the method applied.

ACCREDITED LABORATORIES, INC.
TCLP SEMIVOLATILES ANALYSIS DATA

CASE NUMBER	1776	MATRIX	Leachate
SAMPLE NUMBER	0307978	DILUTION FACTOR	10
DATA FILE	>B8165	DATE EXTRACTED	08/26/03
CLIENT NAME	AWTES	DATE ANALYZED	08/27/03
FIELD ID	P24	ANALYZED BY	WILLIAM

CAS No.	Compound	Result (mg/l)	MDL (mg/l)	Regulatory Level (mg/l)
110861	Pyridine	U	.10	5.0
106467	1,4-Dichlorobenzene	U	.10	7.5
95478	2-Methylphenol	U	.10	200.0
108394	3&4-Methylphenol	U	.10	200.0
67721	Hexachloroethane	U	.10	3.0
98953	Nitrobenzene	U	.10	2.0
87683	Hexachlorobutadiene	U	.10	0.5
88062	2,4,6-Trichlorophenol	U	.10	2.0
95954	2,4,5-Trichlorophenol	U	.50	400.0
121142	2,4-Dinitrotoluene	U	.10	0.13
118741	Hexachlorobenzene	U	.10	0.13
87865	Pentachlorophenol	U	.10	100.0

SURROGATE COMPOUNDS	RECOVERY	LIMITS	STATUS
2-Fluorophenol	50 %	21 - 100	OK
Phenol-d5	48 %	10 - 94	OK
Nitrobenzene-d5	50 %	35 - 114	OK
2-Fluorobiphenyl	49 %	43 - 116	OK
2,4,6-Tribromophenol	83 %	10 - 123	OK
Terphenyl-d14	92 %	33 - 141	OK

U - Indicates compound was analyzed for but not detected.
E - Indicates result exceeds highest calibration standard.
D - Indicates result is based on a dilution.

* 2-Methylphenol = o-cresol
* 3-Methylphenol = m-cresol
* 4-Methylphenol = p-cresol

** 3-Methylphenol and 4-Methylphenol can not be separated by the method applied.

ACCREDITED LABORATORIES, INC.
TCLP SEMIVOLATILES ANALYSIS DATA

CASE NUMBER	1776	MATRIX	Leachate
SAMPLE NUMBER	0307979	DILUTION FACTOR	10
DATA FILE	>B8166	DATE EXTRACTED	08/26/03
CLIENT NAME	AWTES	DATE ANALYZED	08/27/03
FIELD ID	P15A	ANALYZED BY	WILLIAM

CAS No.	Compound	Result (mg/l)	MDL (mg/l)	Regulatory Level (mg/l)
110861	Pyridine	U	.10	5.0
106467	1,4-Dichlorobenzene	U	.10	7.5
95478	2-Methylphenol	U	.10	200.0
108394	3&4-Methylphenol	U	.10	200.0
67721	Hexachloroethane	U	.10	3.0
98953	Nitrobenzene	U	.10	2.0
87683	Hexachlorobutadiene	U	.10	0.5
88062	2,4,6-Trichlorophenol	U	.10	2.0
95954	2,4,5-Trichlorophenol	U	.50	400.0
121142	2,4-Dinitrotoluene	U	.10	0.13
118741	Hexachlorobenzene	U	.10	0.13
87865	Pentachlorophenol	U	.10	100.0

SURROGATE COMPOUNDS	RECOVERY	LIMITS	STATUS
2-Fluorophenol	62 %	21 - 100	OK
Phenol-d5	60 %	10 - 94	OK
Nitrobenzene-d5	64 %	35 - 114	OK
2-Fluorobiphenyl	63 %	43 - 116	OK
2,4,6-Tribromophenol	96 %	10 - 123	OK
Terphenyl-d14	98 %	33 - 141	OK

U - Indicates compound was analyzed for but not detected.
E - Indicates result exceeds highest calibration standard.
D - Indicates result is based on a dilution.

* 2-Methylphenol = o-cresol
* 3-Methylphenol = m-cresol
* 4-Methylphenol = p-cresol

** 3-Methylphenol and 4-Methylphenol can not be separated by the method applied.

ACCREDITED LABORATORIES, INC.
TCLP SEMIVOLATILES ANALYSIS DATA

CASE NUMBER	1776	MATRIX	Leachate
SAMPLE NUMBER	0307980	DILUTION FACTOR	10
DATA FILE	>B8170	DATE EXTRACTED	08/26/03
CLIENT NAME	AWTES	DATE ANALYZED	08/28/03
FIELD ID	P27A	ANALYZED BY	WILLIAM

CAS No.	Compound	Result (mg/l)	MDL (mg/l)	Regulatory Level (mg/l)
110861	Pyridine	U	.10	5.0
106467	1,4-Dichlorobenzene	U	.10	7.5
95478	2-Methylphenol	U	.10	200.0
108394	3&4-Methylphenol	U	.10	200.0
67721	Hexachloroethane	U	.10	3.0
98953	Nitrobenzene	U	.10	2.0
87683	Hexachlorobutadiene	U	.10	0.5
88062	2,4,6-Trichlorophenol	U	.10	2.0
95954	2,4,5-Trichlorophenol	U	.50	400.0
121142	2,4-Dinitrotoluene	U	.10	0.13
118741	Hexachlorobenzene	U	.10	0.13
87865	Pentachlorophenol	U	.10	100.0

SURROGATE COMPOUNDS	RECOVERY	LIMITS	STATUS
2-Fluorophenol	46 %	21 - 100	OK
Phenol-d5	50 %	10 - 94	OK
Nitrobenzene-d5	47 %	35 - 114	OK
2-Fluorobiphenyl	43 %	43 - 116	OK
2,4,6-Tribromophenol	78 %	10 - 123	OK
Terphenyl-d14	87 %	33 - 141	OK

U - Indicates compound was analyzed for but not detected.
E - Indicates result exceeds highest calibration standard.
D - Indicates result is based on a dilution.

* 2-Methylphenol = o-cresol
* 3-Methylphenol = m-cresol
* 4-Methylphenol = p-cresol

** 3-Methylphenol and 4-Methylphenol can not be separated by the method applied.

ACCREDITED LABORATORIES, INC.
TCLP SEMIVOLATILES ANALYSIS DATA

CASE NUMBER	1776	MATRIX	Leachate
SAMPLE NUMBER	0307981	DILUTION FACTOR	10
DATA FILE	>B8171	DATE EXTRACTED	08/26/03
CLIENT NAME	AWTES	DATE ANALYZED	08/28/03
FIELD ID	P24A	ANALYZED BY	WILLIAM

CAS No.	Compound	Result (mg/l)	MDL (mg/l)	Regulatory Level (mg/l)
110861	Pyridine	U	.10	5.0
106467	1,4-Dichlorobenzene	U	.10	7.5
95478	2-Methylphenol	U	.10	200.0
108394	3&4-Methylphenol	U	.10	200.0
67721	Hexachloroethane	U	.10	3.0
98953	Nitrobenzene	U	.10	2.0
87683	Hexachlorobutadiene	U	.10	0.5
88062	2,4,6-Trichlorophenol	U	.10	2.0
95954	2,4,5-Trichlorophenol	U	.50	400.0
121142	2,4-Dinitrotoluene	U	.10	0.13
118741	Hexachlorobenzene	U	.10	0.13
87865	Pentachlorophenol	U	.10	100.0

SURROGATE COMPOUNDS	RECOVERY	LIMITS	STATUS
2-Fluorophenol	42 %	21 - 100	OK
Phenol-d5	46 %	10 - 94	OK
Nitrobenzene-d5	45 %	35 - 114	OK
2-Fluorobiphenyl	43 %	43 - 116	OK
2,4,6-Tribromophenol	81 %	10 - 123	OK
Terphenyl-d14	87 %	33 - 141	OK

U - Indicates compound was analyzed for but not detected.
E - Indicates result exceeds highest calibration standard.
D - Indicates result is based on a dilution.

* 2-Methylphenol = o-cresol
* 3-Methylphenol = m-cresol
* 4-Methylphenol = p-cresol

** 3-Methylphenol and 4-Methylphenol can not be separated by the method applied.

ACCREDITED LABORATORIES, INC.
TCLP SEMIVOLATILES ANALYSIS DATA

CASE NUMBER	1776	MATRIX	Leachate
SAMPLE NUMBER	0307982	DILUTION FACTOR	10
DATA FILE	>B8172	DATE EXTRACTED	08/26/03
CLIENT NAME	AWTES	DATE ANALYZED	08/28/03
FIELD ID	PCA	ANALYZED BY	WILLIAM

CAS No.	Compound	Result (mg/l)	MDL (mg/l)	Regulatory Level (mg/l)
110861	Pyridine	U	.10	5.0
106467	1,4-Dichlorobenzene	U	.10	7.5
95478	2-Methylphenol	U	.10	200.0
108394	3&4-Methylphenol	U	.10	200.0
67721	Hexachloroethane	U	.10	3.0
98953	Nitrobenzene	U	.10	2.0
87683	Hexachlorobutadiene	U	.10	0.5
88062	2,4,6-Trichlorophenol	U	.10	2.0
95954	2,4,5-Trichlorophenol	U	.50	400.0
121142	2,4-Dinitrotoluene	U	.10	0.13
118741	Hexachlorobenzene	U	.10	0.13
87865	Pentachlorophenol	U	.10	100.0

SURROGATE COMPOUNDS	RECOVERY	LIMITS	STATUS
2-Fluorophenol	26 %	21 - 100	OK
Phenol-d5	27 %	10 - 94	OK
Nitrobenzene-d5	30 %	35 - 114	OUT
2-Fluorobiphenyl	32 %	43 - 116	OUT
2,4,6-Tribromophenol	51 %	10 - 123	OK
Terphenyl-d14	61 %	33 - 141	OK

U - Indicates compound was analyzed for but not detected.
E - Indicates result exceeds highest calibration standard.
D - Indicates result is based on a dilution.

* 2-Methylphenol = o-cresol
* 3-Methylphenol = m-cresol
* 4-Methylphenol = p-cresol

** 3-Methylphenol and 4-Methylphenol can not be separated by the method applied.

ACCREDITED LABORATORIES, INC.
TCLP SEMIVOLATILES ANALYSIS DATA

CASE NUMBER	1776	MATRIX	Leachate
SAMPLE NUMBER	0307982	DILUTION FACTOR	10
DATA FILE	>B8173	DATE EXTRACTED	08/26/03
CLIENT NAME	AWTES	DATE ANALYZED	08/28/03
FIELD ID	PCA	ANALYZED BY	WILLIAM

CAS No.	Compound	Result (mg/l)	MDL (mg/l)	Regulatory Level (mg/l)
110861	Pyridine	U	.10	5.0
106467	1,4-Dichlorobenzene	U	.10	7.5
95478	2-Methylphenol	U	.10	200.0
108394	3&4-Methylphenol	U	.10	200.0
67721	Hexachloroethane	U	.10	3.0
98953	Nitrobenzene	U	.10	2.0
87683	Hexachlorobutadiene	U	.10	0.5
88062	2,4,6-Trichlorophenol	U	.10	2.0
95954	2,4,5-Trichlorophenol	U	.50	400.0
121142	2,4-Dinitrotoluene	U	.10	0.13
118741	Hexachlorobenzene	U	.10	0.13
87865	Pentachlorophenol	U	.10	100.0

SURROGATE COMPOUNDS	RECOVERY	LIMITS	STATUS
2-Fluorophenol	26 %	21 - 100	OK
Phenol-d5	27 %	10 - 94	OK
Nitrobenzene-d5	30 %	35 - 114	OUT
2-Fluorobiphenyl	32 %	43 - 116	OUT
2,4,6-Tribromophenol	47 %	10 - 123	OK
Terphenyl-d14	61 %	33 - 141	OK

U - Indicates compound was analyzed for but not detected.
E - Indicates result exceeds highest calibration standard.
D - Indicates result is based on a dilution.

* 2-Methylphenol = o-cresol
* 3-Methylphenol = m-cresol
* 4-Methylphenol = p-cresol

** 3-Methylphenol and 4-Methylphenol can not be separated by the method applied.

ACCREDITED LABORATORIES, INC.
TCLP SEMIVOLATILES ANALYSIS DATA

CASE NUMBER		MATRIX	Leachate
SAMPLE NUMBER	SBLK76	DILUTION FACTOR	10
DATA FILE	>B8152	DATE EXTRACTED	08/26/03
CLIENT NAME		DATE ANALYZED	08/27/03
FIELD ID		ANALYZED BY	WILLIAM

CAS No.	Compound	Result (mg/l)	MDL (mg/l)	Regulatory Level (mg/l)
110861	Pyridine	U	.10	5.0
106467	1,4-Dichlorobenzene	U	.10	7.5
95478	2-Methylphenol	U	.10	200.0
108394	3&4-Methylphenol	U	.10	200.0
67721	Hexachloroethane	U	.10	3.0
98953	Nitrobenzene	U	.10	2.0
87683	Hexachlorobutadiene	U	.10	0.5
88062	2,4,6-Trichlorophenol	U	.10	2.0
95954	2,4,5-Trichlorophenol	U	.50	400.0
121142	2,4-Dinitrotoluene	U	.10	0.13
118741	Hexachlorobenzene	U	.10	0.13
87865	Pentachlorophenol	U	.10	100.0

SURROGATE COMPOUNDS	RECOVERY	LIMITS	STATUS
2-Fluorophenol	61 %	21 - 100	OK
Phenol-d5	58 %	10 - 94	OK
Nitrobenzene-d5	58 %	35 - 114	OK
2-Fluorobiphenyl	57 %	43 - 116	OK
2,4,6-Tribromophenol	93 %	10 - 123	OK
Terphenyl-d14	90 %	33 - 141	OK

U - Indicates compound was analyzed for but not detected.
E - Indicates result exceeds highest calibration standard.
D - Indicates result is based on a dilution.

* 2-Methylphenol = o-cresol
* 3-Methylphenol = m-cresol
* 4-Methylphenol = p-cresol

** 3-Methylphenol and 4-Methylphenol can not be separated by the method applied.

ACCREDITED LABORATORIES, INC.
REGULATED TCLP METALS
INORGANIC ANALYSIS DATA SHEET

Case #:	1776	Matrix:	Leachate
Sample #:	0307966	Date Received:	08/15/03
Field ID:	PDA		
Client Name:	AWTES		

CAS No.	Element	Result MG/L	MDL MG/L	Dilution Factor	Regulatory Level	Method	Date Analyzed
7440-38-2	Arsenic	ND	.250	5	5.00	P	08/21/03
7440-39-3	Barium	ND	.250	5	100.00	P	08/21/03
7440-43-9	Cadmium	ND	.050	5	1.00	P	08/21/03
7440-47-3	Chromium	ND	.100	5	5.00	P	08/21/03
7439-92-1	Lead	ND	.250	5	5.00	P	08/21/03
7439-97-6	Mercury	ND	.005	5	.20	CV	08/21/03
7782-49-2	Selenium	ND	.125	5	1.00	P	08/21/03
7440-22-4	Silver	ND	.050	5	5.00	P	08/21/03

ND - Element analyzed for but not detected.
P - Analyzed by ICP
CV - Analyzed by Cold Vapor
F - Analyzed by GFA
A - Analyzed by flame AA

ACCREDITED LABORATORIES, INC.
REGULATED TCLP METALS
INORGANIC ANALYSIS DATA SHEET

Case #: 1776
Sample #: 0307967
Field ID: PEA
Client Name: AWTES

Matrix: Leachate
Date Received: 08/15/03

CAS No.	Element	Result MG/L	MDL MG/L	Dilution Factor	Regulatory Level	Method	Date Analyzed
7440-38-2	Arsenic	ND	.250	5	5.00	P	08/21/03
7440-39-3	Barium	ND	.250	5	100.00	P	08/21/03
7440-43-9	Cadmium	ND	.050	5	1.00	P	08/21/03
7440-47-3	Chromium	ND	.100	5	5.00	P	08/21/03
7439-92-1	Lead	ND	.250	5	5.00	P	08/21/03
7439-97-6	Mercury	ND	.005	5	.20	CV	08/21/03
7782-49-2	Selenium	ND	.125	5	1.00	P	08/21/03
7440-22-4	Silver	ND	.050	5	5.00	P	08/21/03

ND - Element analyzed for but not detected.
P - Analyzed by ICP
CV - Analyzed by Cold Vapor
F - Analyzed by GFA
A - Analyzed by flame AA

ACCREDITED LABORATORIES, INC.
REGULATED TCLP METALS
INORGANIC ANALYSIS DATA SHEET

Case #: 1776
Sample #: 0307968
Field ID: PFA
Client Name: AWTES

Matrix: Leachate
Date Received: 08/15/03

CAS No.	Element	Result MG/L	MDL MG/L	Dilution Factor	Regulatory Level	Method	Date Analyzed
7440-38-2	Arsenic	ND	.200	4	5.00	P	08/21/03
7440-39-3	Barium	ND	.200	4	100.00	P	08/21/03
7440-43-9	Cadmium	ND	.040	4	1.00	P	08/21/03
7440-47-3	Chromium	ND	.080	4	5.00	P	08/21/03
7439-92-1	Lead	ND	.200	4	5.00	P	08/21/03
7439-97-6	Mercury	ND	.005	5	.20	CV	08/21/03
7782-49-2	Selenium	ND	.100	4	1.00	P	08/21/03
7440-22-4	Silver	ND	.040	4	5.00	P	08/21/03

ND - Element analyzed for but not detected.
P - Analyzed by ICP
F - Analyzed by GFA
CV - Analyzed by Cold Vapor
A - Analyzed by flame AA

ACCREDITED LABORATORIES, INC.
REGULATED TCLP METALS
INORGANIC ANALYSIS DATA SHEET

Case #: 1776
Sample #: 0307969
Field ID: PHA
Client Name: AWTES

Matrix: Leachate
Date Received: 08/15/03

CAS No.	Element	Result MG/L	MDL MG/L	Dilution Factor	Regulatory Level	Method	Date Analyzed
7440-38-2	Arsenic	ND	.250	5	5.00	P	08/21/03
7440-39-3	Barium	ND	.250	5	100.00	P	08/21/03
7440-43-9	Cadmium	ND	.050	5	1.00	P	08/21/03
7440-47-3	Chromium	ND	.100	5	5.00	P	08/21/03
7439-92-1	Lead	ND	.250	5	5.00	P	08/21/03
7439-97-6	Mercury	ND	.005	5	.20	CV	08/21/03
7782-49-2	Selenium	ND	.125	5	1.00	P	08/21/03
7440-22-4	Silver	ND	.050	5	5.00	P	08/21/03

ND - Element analyzed for but not detected.
P - Analyzed by ICP
CV - Analyzed by Cold Vapor
F - Analyzed by GFA
A - Analyzed by flame AA

ACCREDITED LABORATORIES, INC.
REGULATED TCLP METALS
INORGANIC ANALYSIS DATA SHEET

Case #:	1776	Matrix:	Leachate
Sample #:	0307970	Date Received:	08/15/03
Field ID:	P17A		
Client Name:	AWTES		

CAS No.	Element	Result MG/L	MDL MG/L	Dilution Factor	Regulatory Level	Method	Date Analyzed
7440-38-2	Arsenic	ND	.200	4	5.00	P	08/21/03
7440-39-3	Barium	ND	.200	4	100.00	P	08/21/03
7440-43-9	Cadmium	ND	.040	4	1.00	P	08/21/03
7440-47-3	Chromium	ND	.080	4	5.00	P	08/21/03
7439-92-1	Lead	ND	.200	4	5.00	P	08/21/03
7439-97-6	Mercury	ND	.005	5	.20	CV	08/21/03
7782-49-2	Selenium	ND	.100	4	1.00	P	08/21/03
7440-22-4	Silver	ND	.040	4	5.00	P	08/21/03

ND - Element analyzed for but not detected.
P - Analyzed by ICP
CV - Analyzed by Cold Vapor
F - Analyzed by GFA
A - Analyzed by flame AA

ACCREDITED LABORATORIES, INC.
REGULATED TCLP METALS
INORGANIC ANALYSIS DATA SHEET

Case #:	1776	Matrix:	Leachate
Sample #:	0307971	Date Received:	08/15/03
Field ID:	P23A		
Client Name:	AWTES		

CAS No.	Element	Result MG/L	MDL MG/L	Dilution Factor	Regulatory Level	Method	Date Analyzed
7440-38-2	Arsenic	ND	.200	4	5.00	P	08/21/03
7440-39-3	Barium	ND	.200	4	100.00	P	08/21/03
7440-43-9	Cadmium	ND	.040	4	1.00	P	08/21/03
7440-47-3	Chromium	ND	.080	4	5.00	P	08/21/03
7439-92-1	Lead	ND	.200	4	5.00	P	08/21/03
7439-97-6	Mercury	ND	.005	5	.20	CV	08/21/03
7782-49-2	Selenium	ND	.100	4	1.00	P	08/21/03
7440-22-4	Silver	ND	.040	4	5.00	P	08/21/03

ND - Element analyzed for but not detected.
P - Analyzed by ICP
CV - Analyzed by Cold Vapor
F - Analyzed by GFA
A - Analyzed by flame AA

ACCREDITED LABORATORIES, INC.
REGULATED TCLP METALS
INORGANIC ANALYSIS DATA SHEET

Case #: 1776
Sample #: 0307972
Field ID: P25A
Client Name: AWTES

Matrix: Leachate
Date Received: 08/15/03

CAS No.	Element	Result MG/L	MDL MG/L	Dilution Factor	Regulatory Level	Method	Date Analyzed
7440-38-2	Arsenic	ND	.250	5	5.00	P	08/21/03
7440-39-3	Barium	ND	.250	5	100.00	P	08/21/03
7440-43-9	Cadmium	ND	.050	5	1.00	P	08/21/03
7440-47-3	Chromium	ND	.100	5	5.00	P	08/21/03
7439-92-1	Lead	ND	.250	5	5.00	P	08/21/03
7439-97-6	Mercury	ND	.005	5	.20	CV	08/21/03
7782-49-2	Selenium	ND	.125	5	1.00	P	08/21/03
7440-22-4	Silver	ND	.050	5	5.00	P	08/21/03

ND - Element analyzed for but not detected.
P - Analyzed by ICP
F - Analyzed by GFA
CV - Analyzed by Cold Vapor
A - Analyzed by flame AA

ACCREDITED LABORATORIES, INC.
REGULATED TCLP METALS
INORGANIC ANALYSIS DATA SHEET

Case #: 1776
Sample #: 0307973
Field ID: P26A
Client Name: AWTES

Matrix: Leachate
Date Received: 08/15/03

CAS No.	Element	Result MG/L	MDL MG/L	Dilution Factor	Regulatory Level	Method	Date Analyzed
7440-38-2	Arsenic	ND	.250	5	5.00	P	08/21/03
7440-39-3	Barium	ND	.250	5	100.00	P	08/21/03
7440-43-9	Cadmium	ND	.050	5	1.00	P	08/21/03
7440-47-3	Chromium	ND	.100	5	5.00	P	08/21/03
7439-92-1	Lead	ND	.250	5	5.00	P	08/21/03
7439-97-6	Mercury	ND	.005	5	.20	CV	08/21/03
7782-49-2	Selenium	ND	.125	5	1.00	P	08/21/03
7440-22-4	Silver	ND	.050	5	5.00	P	08/21/03

ND - Element analyzed for but not detected.
P - Analyzed by ICP
CV - Analyzed by Cold Vapor
F - Analyzed by GFA
A - Analyzed by flame AA

ACCREDITED LABORATORIES, INC.
REGULATED TCLP METALS
INORGANIC ANALYSIS DATA SHEET

Case #:	1776	Matrix:	Leachate
Sample #:	0307974	Date Received:	08/15/03
Field ID:	P28A		
Client Name:	AWTES		

CAS No.	Element	Result MG/L	MDL MG/L	Dilution Factor	Regulatory Level	Method	Date Analyzed
7440-38-2	Arsenic	ND	.250	5	5.00	P	08/21/03
7440-39-3	Barium	ND	.250	5	100.00	P	08/21/03
7440-43-9	Cadmium	ND	.050	5	1.00	P	08/21/03
7440-47-3	Chromium	ND	.100	5	5.00	P	08/21/03
7439-92-1	Lead	ND	.250	5	5.00	P	08/21/03
7439-97-6	Mercury	ND	.005	5	.20	CV	08/21/03
7782-49-2	Selenium	ND	.125	5	1.00	P	08/21/03
7440-22-4	Silver	ND	.050	5	5.00	P	08/21/03

ND - Element analyzed for but not detected.
P - Analyzed by ICP
F - Analyzed by GFA
CV - Analyzed by Cold Vapor
A - Analyzed by flame AA

ACCREDITED LABORATORIES, INC.
REGULATED TCLP METALS
INORGANIC ANALYSIS DATA SHEET

Case #:	1776	Matrix:	Leachate
Sample #:	0307975	Date Received:	08/15/03
Field ID:	P42A		
Client Name:	AWTES		

CAS No.	Element	Result MG/L	MDL MG/L	Dilution Factor	Regulatory Level	Method	Date Analyzed
7440-38-2	Arsenic	ND	.250	5	5.00	P	08/21/03
7440-39-3	Barium	ND	.250	5	100.00	P	08/21/03
7440-43-9	Cadmium	ND	.050	5	1.00	P	08/21/03
7440-47-3	Chromium	ND	.100	5	5.00	P	08/21/03
7439-92-1	Lead	ND	.250	5	5.00	P	08/21/03
7439-97-6	Mercury	ND	.005	5	.20	CV	08/21/03
7782-49-2	Selenium	ND	.125	5	1.00	P	08/21/03
7440-22-4	Silver	ND	.050	5	5.00	P	08/21/03

ND - Element analyzed for but not detected.
P - Analyzed by ICP
CV - Analyzed by Cold Vapor
F - Analyzed by GFA
A - Analyzed by flame AA

ACCREDITED LABORATORIES, INC.
REGULATED TCLP METALS
INORGANIC ANALYSIS DATA SHEET

Case #: 1776
Sample #: 0307976
Field ID: PEB
Client Name: AWTES

Matrix: Leachate
Date Received: 08/15/03

CAS No.	Element	Result MG/L	MDL MG/L	Dilution Factor	Regulatory Level	Method	Date Analyzed
7440-38-2	Arsenic	ND	.250	5	5.00	P	08/21/03
7440-39-3	Barium	.484	.250	5	100.00	P	08/21/03
7440-43-9	Cadmium	ND	.050	5	1.00	P	08/21/03
7440-47-3	Chromium	ND	.100	5	5.00	P	08/21/03
7439-92-1	Lead	ND	.250	5	5.00	P	08/21/03
7439-97-6	Mercury	ND	.005	5	.20	CV	08/21/03
7782-49-2	Selenium	ND	.125	5	1.00	P	08/21/03
7440-22-4	Silver	ND	.050	5	5.00	P	08/21/03

ND - Element analyzed for but not detected.
P - Analyzed by ICP
F - Analyzed by GFA
CV - Analyzed by Cold Vapor
A - Analyzed by flame AA

ACCREDITED LABORATORIES, INC.
REGULATED TCLP METALS
INORGANIC ANALYSIS DATA SHEET

Case #: 1776
Sample #: 0307977
Field ID: PHB
Client Name: AWTES

Matrix: Leachate
Date Received: 08/15/03

CAS No.	Element	Result MG/L	MDL MG/L	Dilution Factor	Regulatory Level	Method	Date Analyzed
7440-38-2	Arsenic	ND	.250	5	5.00	P	08/21/03
7440-39-3	Barium	ND	.250	5	100.00	P	08/21/03
7440-43-9	Cadmium	ND	.050	5	1.00	P	08/21/03
7440-47-3	Chromium	ND	.100	5	5.00	P	08/21/03
7439-92-1	Lead	ND	.250	5	5.00	P	08/21/03
7439-97-6	Mercury	ND	.005	5	.20	CV	08/21/03
7782-49-2	Selenium	ND	.125	5	1.00	P	08/21/03
7440-22-4	Silver	ND	.050	5	5.00	P	08/21/03

ND - Element analyzed for but not detected.
P - Analyzed by ICP
CV - Analyzed by Cold Vapor
F - Analyzed by GFA
A - Analyzed by flame AA

ACCREDITED LABORATORIES, INC.
REGULATED TCLP METALS
INORGANIC ANALYSIS DATA SHEET

Case #: 1776
Sample #: 0307978
Field ID: P24
Client Name: AWTES

Matrix: Leachate
Date Received: 08/15/03

CAS No.	Element	Result MG/L	MDL MG/L	Dilution Factor	Regulatory Level	Method	Date Analyzed
7440-38-2	Arsenic	ND	.250	5	5.00	P	08/21/03
7440-39-3	Barium	ND	.250	5	100.00	P	08/21/03
7440-43-9	Cadmium	ND	.050	5	1.00	P	08/21/03
7440-47-3	Chromium	ND	.100	5	5.00	P	08/21/03
7439-92-1	Lead	ND	.250	5	5.00	P	08/21/03
7439-97-6	Mercury	ND	.005	5	.20	CV	08/21/03
7782-49-2	Selenium	ND	.125	5	1.00	P	08/21/03
7440-22-4	Silver	ND	.050	5	5.00	P	08/21/03

ND - Element analyzed for but not detected.
P - Analyzed by ICP
F - Analyzed by GFA
CV - Analyzed by Cold Vapor
A - Analyzed by flame AA

ACCREDITED LABORATORIES, INC.
REGULATED TCLP METALS
INORGANIC ANALYSIS DATA SHEET

Case #: 1776
Sample #: 0307979
Field ID: P15A
Client Name: AWTES

Matrix: Leachate
Date Received: 08/15/03

CAS No.	Element	Result MG/L	MDL MG/L	Dilution Factor	Regulatory Level	Method	Date Analyzed
7440-38-2	Arsenic	ND	.250	5	5.00	P	08/21/03
7440-39-3	Barium	ND	.250	5	100.00	P	08/21/03
7440-43-9	Cadmium	ND	.050	5	1.00	P	08/21/03
7440-47-3	Chromium	ND	.100	5	5.00	P	08/21/03
7439-92-1	Lead	ND	.250	5	5.00	P	08/21/03
7439-97-6	Mercury	ND	.005	5	.20	CV	08/21/03
7782-49-2	Selenium	ND	.125	5	1.00	P	08/21/03
7440-22-4	Silver	ND	.050	5	5.00	P	08/21/03

ND - Element analyzed for but not detected.
P - Analyzed by ICP
F - Analyzed by GFA
CV - Analyzed by Cold Vapor
A - Analyzed by flame AA

ACCREDITED LABORATORIES, INC.
REGULATED TCLP METALS
INORGANIC ANALYSIS DATA SHEET

Case #: 1776
Sample #: 0307980
Field ID: P27A
Client Name: AWTES

Matrix: Leachate
Date Received: 08/15/03

CAS No.	Element	Result MG/L	MDL MG/L	Dilution Factor	Regulatory Level	Method	Date Analyzed
7440-38-2	Arsenic	ND	.250	5	5.00	P	08/21/03
7440-39-3	Barium	ND	.250	5	100.00	P	08/21/03
7440-43-9	Cadmium	ND	.050	5	1.00	P	08/21/03
7440-47-3	Chromium	ND	.100	5	5.00	P	08/21/03
7439-92-1	Lead	ND	.250	5	5.00	P	08/21/03
7439-97-6	Mercury	ND	.005	5	.20	CV	08/21/03
7782-49-2	Selenium	ND	.125	5	1.00	P	08/21/03
7440-22-4	Silver	ND	.050	5	5.00	P	08/21/03

ND - Element analyzed for but not detected.
P - Analyzed by ICP
CV - Analyzed by Cold Vapor
F - Analyzed by GFA
A - Analyzed by flame AA

ACCREDITED LABORATORIES, INC.
REGULATED TCLP METALS
INORGANIC ANALYSIS DATA SHEET

Case #: 1776
Sample #: 0307981
Field ID: P24A
Client Name: AWTES

Matrix: Leachate
Date Received: 08/15/03

CAS No.	Element	Result MG/L	MDL MG/L	Dilution Factor	Regulatory Level	Method	Date Analyzed
7440-38-2	Arsenic	ND	.250	5	5.00	P	08/21/03
7440-39-3	Barium	ND	.250	5	100.00	P	08/21/03
7440-43-9	Cadmium	ND	.050	5	1.00	P	08/21/03
7440-47-3	Chromium	ND	.100	5	5.00	P	08/21/03
7439-92-1	Lead	ND	.250	5	5.00	P	08/21/03
7439-97-6	Mercury	ND	.005	5	.20	CV	08/21/03
7782-49-2	Selenium	ND	.125	5	1.00	P	08/21/03
7440-22-4	Silver	ND	.050	5	5.00	P	08/21/03

ND - Element analyzed for but not detected.
P - Analyzed by ICP
CV - Analyzed by Cold Vapor
F - Analyzed by GFA
A - Analyzed by flame AA

ACCREDITED LABORATORIES, INC.
REGULATED TCLP METALS
INORGANIC ANALYSIS DATA SHEET

Case #: 1776
Sample #: 0307982
Field ID: PCA
Client Name: AWTES

Matrix: Leachate
Date Received: 08/15/03

CAS No.	Element	Result MG/L	MDL MG/L	Dilution Factor	Regulatory Level	Method	Date Analyzed
7440-38-2	Arsenic	ND	.250	5	5.00	P	08/21/03
7440-39-3	Barium	ND	.250	5	100.00	P	08/21/03
7440-43-9	Cadmium	ND	.050	5	1.00	P	08/21/03
7440-47-3	Chromium	ND	.100	5	5.00	P	08/21/03
7439-92-1	Lead	ND	.250	5	5.00	P	08/21/03
7439-97-6	Mercury	ND	.005	5	.20	CV	08/21/03
7782-49-2	Selenium	ND	.125	5	1.00	P	08/21/03
7440-22-4	Silver	ND	.050	5	5.00	P	08/21/03

ND - Element analyzed for but not detected.
P - Analyzed by ICP
CV - Analyzed by Cold Vapor
F - Analyzed by GFA
A - Analyzed by flame AA

ACCREDITED LABORATORIES, INC.
REGULATED TCLP METALS
INORGANIC ANALYSIS DATA SHEET

Sample #: PBL114 Matrix: Leachate
Field ID: PREPBLANK Date Prepared: 08/21/03

CAS No.	Element	Result MG/L	MDL MG/L	Dilution Factor	Regulatory Level	Method	Date Analyzed
7440-38-2	Arsenic	ND	.050	1	5.00	P	08/21/03
7440-39-3	Barium	ND	.050	1	100.00	P	08/21/03
7440-43-9	Cadmium	ND	.010	1	1.00	P	08/21/03
7440-47-3	Chromium	ND	.020	1	5.00	P	08/21/03
7439-92-1	Lead	ND	.050	1	5.00	P	08/21/03
7439-97-6	Mercury	ND	.001	1	.20	CV	08/21/03
7782-49-2	Selenium	ND	.025	1	1.00	P	08/21/03
7440-22-4	Silver	ND	.010	1	5.00	P	08/21/03

ND - Element analyzed for but not detected.
P - Analyzed by ICP CV - Analyzed by Cold Vapor
F - Analyzed by GFA A - Analyzed by flame AA

61 END

"Dave Urda"
<DUrda@envirocon.com>

03/18/2005 09:41 AM

To: Jean M. Agostinelli/EMPL/TX/Verizon@VZNotes
cc: "Lucky Tabor" <LTabor@envirocon.com>
Subject: Spent Carbon Results/Disposal

In the attached files are the chemical and radiological results for the spent carbon. This is scheduled for transfer and off-site shipment on Tuesday and Wednesday of next week.

Dave

spent carbon analytical 2005.pdf spent carbon rad results 05.pdf

Pam M. Cox
04/06/2005 03:12 PM

To: Jean M. Agostinelli/EMPL/TX/Verizon@VZNotes
cc:
Subject: Spent Carbon Data

Jean -
I have looked at the spent carbon data and here is a summary.

1. Shane says rad is fine.

2. No baseline of the carbon was ever run for chemical purposes to verify carbon contamination although lucky says "it was virgin carbon"
I was thinking more like our current issue with mountain view. Dave thinks one grab sample was collected from Unit 5 and one from Unit 6 (but he doesn't seem very sure).

The chloroform and methylene chloride are in the trip blanks and likely lab contamination and not a concern.
The 1,4-DCB is in a blank so again doesn't appear to be an issue.

The mercury (0.82 ug/l) and barium (329 ug/l) TCLP levels seem ok compared to disposal issue of (200 and 100,000 ug/l respectively).
Although the detection of zinc is high (27,600 ug/l) I did not see a standard for it but I am going to double check.

Thanks
Pam

SEVERN TRENT STL

STL St. Louis
13715 Rider Trail North
Earth City, MO 63045

Tel: 314 298 8566 Fax: 314 298 8757
www.stl-inc.com

ANALYTICAL REPORT

GTE Hicksville HQE03060

Lot #: F5B230206

Gina Filippone

URS
849 International Drive
Suite 320
Linthicum, MD 21090

SEVERN TRENT LABORATORIES, INC.

Kay Clay
Project Manager

March 10, 2005

Case Narrative
LOT NUMBER: F5B230206

This report contains the analytical results for the two samples received under chain of custody by STL St. Louis on February 23, 2005. These samples are associated with your GTE Hicksville HQE03060 project.

The analytical results included in this report meet all applicable quality control procedure requirements except as noted on the following page.

The test results in this report meet all NELAP requirements for parameters in which accreditations are held by STL St. Louis. Any exceptions to NELAP requirements are noted in the case narrative. The case narrative is an integral part of this report.

All chemical analysis results are based upon sample as received, wet weight, unless noted otherwise. All radiochemistry results are based upon sample as dried and ground with the exception of tritium, unless requested wet weight by the client.

Observations/Nonconformances

Reference the chain of custody and condition upon receipt report for any variations on receipt conditions and temperature of samples on receipt.

All instruments were properly calibrated and verified before analysis, unless noted below.
Method:
8260B

Affected Sample:
F5B230206 (2): TB-2/22/05

Case Narrative:
5067291
The LCS/LCSD recoveries are outside QC limits for less than 10% of the compounds spiked. Laboratory QC practices, based on federal guidance documents, allow for up to 10% of the spike compounds to be outside QC criteria without necessitating re-preparation/re-analysis. Sample purge efficiency and compliance is demonstrated by the remaining acceptable LCS/LCSD.

The MS/MSD recoveries are outside QC limits for less than 10% of the compounds spiked. Laboratory QC practices, based on federal guidance documents, allow for up to 10% of the spike compounds to be outside QC criteria without necessitating re-preparation/re-analysis. Sample purge efficiency and compliance is demonstrated by the remaining acceptable MS/MSD.

The MS/MSD RPD for acetone is not within method acceptance criteria. MS/MSD recoveries are within QC limits demonstrating good extraction performance in the sample matrix. No further action is required.

The RPD for methylene chloride was poor. The analyte recovered high in the MSD.

Method:
8151A

Affected Sample:
F5B230206 (1): CARBON TEST

Case Narrative:
The RPDs for 2,4-D and 2,4,5-TP were greater than 20. Since the MS/MSD recoveries met criteria the data was reported

METHODS SUMMARY

F5B230206

PARAMETER	ANALYTICAL METHOD	PREPARATION METHOD
pH Non-Aqueous	SW846 9045A	
Chlorinated Herbicides by GC	SW846 8151A	SW846 1311/8150
Inductively Coupled Plasma (ICP) Metals	SW846 6010B	SW846 1311/3010
Mercury in Liquid Waste (Manual Cold-Vapor)	SW846 7470A	SW846 1311/7470
Organochlorine Pesticides	SW846 8081A	SW846 1311/3510
Pensky-Martens Method for Determining Ignitability	SW846 1010	SW846 1010
Percent Moisture	MCAWW 160.3 MOD	MCAWW 160.3 MOD
Reactive Cyanide	SW846 7.3.3	SW846 7.3.3
Reactive Sulfide	SW846 7.3.4	SW846 7.3.4
Semivolatile Organic Compounds by GC/MS	SW846 8270C	SW846 1311/3510
Volatile Organics by GC/MS	SW846 8260B	SW846 1311/5030
Volatile Organics by GC/MS	SW846 8260B	SW846 5030B/826

References:

MCAWW "Methods for Chemical Analysis of Water and Wastes", EPA-600/4-79-020, March 1983 and subsequent revisions.

SW846 "Test Methods for Evaluating Solid Waste, Physical/Chemical Methods", Third Edition, November 1986 and its updates.

SAMPLE SUMMARY

F5B230206

WO #	SAMPLE#	CLIENT SAMPLE ID	SAMPLED DATE	SAMP TIME
G4013	001	CARBON TEST	02/22/05	13:20
G402W	002	TB-2/22/05	02/22/05	

NOTE(S):

- The analytical results of the samples listed above are presented on the following pages.
- All calculations are performed before rounding to avoid round-off errors in calculated results.
- Results noted as "ND" were not detected at or above the stated limit.
- This report must not be reproduced, except in full, without the written approval of the laboratory.
- Results for the following parameters are never reported on a dry weight basis: color, corrosivity, density, flashpoint, ignitability, layers, odor, paint filter test, pH, porosity pressure, reactivity, redox potential, specific gravity, spot tests, solids, solubility, temperature, viscosity, and weight.

GTE OPERATIONS SUPPORT INCORPORATED

Client Sample ID: CARBON TEST

TCLP GC/MS Volatiles

Lot-Sample #...:	F5B230206-001	**Work Order #...:**	G40131AT	**Matrix.....:**	SOLID
Date Sampled...:	02/22/05 13:20	**Date Received..:**	02/23/05		
Leach Date.....:	02/24/05	**Prep Date.....:**	03/03/05	**Analysis Date..:**	03/03/05
Leach Batch #..:	P505516	**Prep Batch #...:**	5056126	**Analysis Time..:**	18:00
Dilution Factor:	1				
% Moisture.....:	1.4	**Method.....:**	SW846 8260B		

PARAMETER	RESULT	REPORTING LIMIT	UNITS	MDL
Vinyl chloride	ND	100	ug/L	7.1
1,1-Dichloroethene	ND	50	ug/L	6.7
2-Butanone	ND	50	ug/L	11
Chloroform	ND	50	ug/L	5.2
Carbon tetrachloride	ND	50	ug/L	4.5
1,2-Dichloroethane	ND	50	ug/L	4.2
Benzene	ND	50	ug/L	3.1
Trichloroethene	ND	50	ug/L	4.4
Tetrachloroethene	ND	50	ug/L	5.5
Chlorobenzene	ND	50	ug/L	5.4

SURROGATE	PERCENT RECOVERY	RECOVERY LIMITS
Dibromofluoromethane	95	(71 - 138)
Toluene-d8	101	(81 - 121)
4-Bromofluorobenzene	96	(82 - 123)
1,2-Dichloroethane-d4	97	(83 - 126)

NOTE(S):

Analysis performed in accordance with USEPA Toxicity Characteristic Leaching Procedure Method 1311

GTE OPERATIONS SUPPORT INCORPORATED

CARBON TEST

GC/MS Volatiles

Lot-Sample #: F5B230206-001 **Work Order #:** G40131AT **Matrix:** SOLID

MASS SPECTROMETER/DATA SYSTEM (MSDS) TENTATIVELY IDENTIFIED COMPOUNDS

PARAMETER	CAS #	ESTIMATED RESULT	RETENTION TIME	UNITS
None				ug/L

GTE OPERATIONS SUPPORT INCORPORATED

Client Sample ID: CARBON TEST

TCLP GC/MS Semivolatiles

Lot-Sample #...:	F5B230206-001	**Work Order #...:**	G40131AU	**Matrix.....:**	SOLID
Date Sampled...:	02/22/05 13:20	**Date Received..:**	02/23/05		
Leach Date.....:	02/24/05	**Prep Date.....:**	03/01/05	**Analysis Date..:**	03/03/05
Leach Batch #..:	P505515	**Prep Batch #...:**	5060429	**Analysis Time..:**	16:15
Dilution Factor:	1				
% Moisture.....:	1.4	**Method.....:**	SW846 8270C		

PARAMETER	RESULT	REPORTING LIMIT	UNITS	MDL
Pyridine	ND	100	ug/L	8.5
1,4-Dichlorobenzene	ND	50	ug/L	4.6
2-Methylphenol	ND	50	ug/L	4.6
3-Methylphenol & 4-Methylphenol	ND	50	ug/L	8.6
Hexachloroethane	ND	50	ug/L	4.0
Nitrobenzene	ND	50	ug/L	4.3
Hexachlorobutadiene	ND	50	ug/L	4.6
2,4,6-Trichlorophenol	ND	50	ug/L	12
2,4,5-Trichlorophenol	ND	50	ug/L	12
2,4-Dinitrotoluene	ND	50	ug/L	20
Hexachlorobenzene	ND	50	ug/L	5.8
Pentachlorophenol	ND	250	ug/L	19

SURROGATE	PERCENT RECOVERY	RECOVERY LIMITS
2-Fluorophenol	31	(10 - 86)
Phenol-d5	22	(10 - 95)
Nitrobenzene-d5	60	(50 - 104)
2-Fluorobiphenyl	50	(41 - 111)
Terphenyl-d14	53	(19 - 119)
2,4,6-Tribromophenol	54	(17 - 121)

NOTE(S):

Analysis performed in accordance with USEPA Toxicity Characteristic Leaching Procedure Method 1311

GTE OPERATIONS SUPPORT INCORPORATED

CARBON TEST

GC/MS Semivolatiles

Lot-Sample #: F5B230206-001 **Work Order #:** G40131AU **Matrix:** SOLID

MASS SPECTROMETER/DATA SYSTEM (MSDS) TENTATIVELY IDENTIFIED COMPOUNDS

PARAMETER	CAS #	ESTIMATED RESULT	RETENTION TIME	UNITS
None				ug/L

GTE OPERATIONS SUPPORT INCORPORATED

Client Sample ID: CARBON TEST

TCLP GC Semivolatiles

Lot-Sample #...:	F5B230206-001	**Work Order #...:**	G40131AV	**Matrix.....:**	SOLID
Date Sampled...:	02/22/05 13:20	**Date Received..:**	02/23/05		
Leach Date.....:	02/24/05	**Prep Date.....:**	02/28/05	**Analysis Date..:**	03/02/05
Leach Batch #..:	P505515	**Prep Batch #...:**	5059576	**Analysis Time..:**	07:29
Dilution Factor:	1				
% Moisture.....:	1.4	**Method.....:**	SW846 8081A		

PARAMETER	RESULT	REPORTING LIMIT	UNITS	MDL
Chlordane (technical)	ND	5.0	ug/L	2.4
Endrin	ND	0.50	ug/L	0.30
gamma-BHC (Lindane)	ND	0.50	ug/L	0.30
Heptachlor	ND	0.50	ug/L	0.20
Heptachlor epoxide	ND	0.50	ug/L	0.20
Methoxychlor	ND	1.0	ug/L	0.30
Toxaphene	ND	20	ug/L	12

SURROGATE	PERCENT RECOVERY	RECOVERY LIMITS
Tetrachloro-m-xylene	87	(47 - 126)
Decachlorobiphenyl	110	(42 - 138)

NOTE(S):

Analysis performed in accordance with USEPA Toxicity Characteristic Leaching Procedure Method 1311

GTE OPERATIONS SUPPORT INCORPORATED

Client Sample ID: CARBON TEST

TCLP GC Semivolatiles

Lot-Sample #...:	F5B230206-001	**Work Order #...:**	G40131AW	**Matrix.....:**	SOLID
Date Sampled...:	02/22/05 13:20	**Date Received..:**	02/23/05		
Leach Date.....:	02/24/05	**Prep Date.....:**	02/28/05	**Analysis Date..:**	03/05/05
Leach Batch #..:	P505515	**Prep Batch #...:**	5059577	**Analysis Time..:**	11:38
Dilution Factor:	1				
% Moisture.....:	1.4	**Method.....:**	SW846 8151A		

PARAMETER	RESULT	REPORTING LIMIT	UNITS	MDL
2,4-D	ND	40	ug/L	7.7
2,4,5-TP (Silvex)	ND	10	ug/L	0.74

SURROGATE	PERCENT RECOVERY	RECOVERY LIMITS
2,4-Dichlorophenylacetic acid	84	(49 - 123)

NOTE(S):

Analysis performed in accordance with USEPA Toxicity Characteristic Leaching Procedure Method 1311

GTE OPERATIONS SUPPORT INCORPORATED

Client Sample ID: CARBON TEST

TCLP Metals

Lot-Sample #...: F5B230206-001 Matrix.....: SOLID
Date Sampled...: 02/22/05 13:20 Date Received..: 02/23/05
Leach Date.....: 02/24/05 Leach Batch #..: P505515

PARAMETER	RESULT	REPORTING LIMIT	UNITS	METHOD	PREPARATION-ANALYSIS DATE	WORK ORDER #
Prep Batch #...: 5056077						
Mercury	**0.82 B**	**10**	**ug/L**	**SW846 7470A**	**02/25/05**	**G40131AM**
		Dilution Factor: 5		Analysis Time..: 14:28	MDL.....: 0.23	
Prep Batch #...: 5056337						
Arsenic	ND	500	ug/L	SW846 6010B	02/25-02/28/05	G40131AC
		Dilution Factor: 2.5		Analysis Time..: 09:09	MDL.....: 183.615	
Barium	**329 B**	**500**	**ug/L**	**SW846 6010B**	**02/25-02/28/05**	**G40131AD**
		Dilution Factor: 2.5		Analysis Time..: 09:09	MDL.....: 1.884	
Cadmium	ND	25	ug/L	SW846 6010B	02/25-02/28/05	G40131AE
		Dilution Factor: 2.5		Analysis Time..: 09:09	MDL.....: 5	
Chromium	ND	50	ug/L	SW846 6010B	02/25-02/28/05	G40131AF
		Dilution Factor: 2.5		Analysis Time..: 09:09	MDL.....: 18.4475	
Lead	ND	250	ug/L	SW846 6010B	02/25-02/28/05	G40131AG
		Dilution Factor: 2.5		Analysis Time..: 09:09	MDL.....: 197.5	
Silver	ND	50	ug/L	SW846 6010B	02/25-02/28/05	G40131AH
		Dilution Factor: 2.5		Analysis Time..: 09:09	MDL.....: 4.4745	
Selenium	ND	500	ug/L	SW846 6010B	02/25-02/28/05	G40131AJ
		Dilution Factor: 2.5		Analysis Time..: 09:09	MDL.....: 243.25	
Copper	ND	125	ug/L	SW846 6010B	02/25-02/28/05	G40131AK
		Dilution Factor: 2.5		Analysis Time..: 09:09	MDL.....: 10.675	
Zinc	**27600**	**75**	**ug/L**	**SW846 6010B**	**02/25-02/28/05**	**G40131AL**
		Dilution Factor: 2.5		Analysis Time..: 09:09	MDL.....: 8.478	

NOTE(S):

Analysis performed in accordance with USEPA Toxicity Characteristic Leaching Procedure Method 1311

B Estimated result. Result is less than RL.

GTE OPERATIONS SUPPORT INCORPORATED

Client Sample ID: CARBON TEST

General Chemistry

Lot-Sample #...: F5B230206-001 Work Order #...: G4013 Matrix.....: SOLID
Date Sampled...: 02/22/05 13:20 Date Received..: 02/23/05
% Moisture.....: 1.4

PARAMETER	RESULT	RL	UNITS	METHOD	PREPARATION-ANALYSIS DATE	PREP BATCH #
pH (solid)	6.4		No Units	SW846 9045A	02/24/05	5056409
		Dilution Factor: 1		Analysis Time..: 00:00	MDL.....:	
Flashpoint	>60.0	25.0	deg C	SW846 1010	02/25/05	5056455
		Dilution Factor: 1		Analysis Time..: 00:00	MDL.....:	
Percent Moisture	1.4	0.10	%	MCAWW 160.3 MOD	02/26-02/27/05	5060207
		Dilution Factor: 1		Analysis Time..: 00:22	MDL.....:	
Reactive Cyanide	ND	0.051	mg/kg	SW846 7.3.3	03/01-03/03/05	5060434
		Dilution Factor: 1		Analysis Time..: 00:00	MDL.....:	
Reactive Sulfide	ND	4.5	mg/kg	SW846 7.3.4	02/25-02/28/05	5059064
		Dilution Factor: 1		Analysis Time..: 00:00	MDL.....:	

NOTE(S):

RL Reporting Limit

Results and reporting limits have been adjusted for dry weight.

GTE OPERATIONS SUPPORT INCORPORATED

Client Sample ID: TB-2/22/05

GC/MS Volatiles

Lot-Sample #...: F5B230206-002 Work Order #...: G402W1AA Matrix.....: WATER
Date Sampled...: 02/22/05 Date Received..: 02/23/05
Prep Date.....: 03/07/05 Analysis Date..: 03/07/05
Prep Batch #...: 5067291 Analysis Time..: 14:54
Dilution Factor: 1

Method.....: SW846 8260B

PARAMETER	RESULT	REPORTING LIMIT	UNITS	MDL
Acetone	ND	2.0	ug/L	0.21
Benzene	ND	1.0	ug/L	0.050
Bromodichloromethane	ND	1.0	ug/L	0.080
Bromoform	ND	1.0	ug/L	0.17
Bromomethane	ND	2.0	ug/L	0.23
2-Butanone	ND	5.0	ug/L	0.33
Carbon disulfide	ND	1.0	ug/L	0.25
Carbon tetrachloride	ND	1.0	ug/L	0.090
Chlorobenzene	ND	1.0	ug/L	0.050
Dibromochloromethane	ND	1.0	ug/L	0.090
Chloroethane	ND	2.0	ug/L	0.11
Chloroform	**0.45 J**	**1.0**	**ug/L**	**0.070**
Chloromethane	ND	2.0	ug/L	0.19
1,1-Dichloroethane	ND	1.0	ug/L	0.070
1,2-Dichloroethane	ND	1.0	ug/L	0.090
cis-1,2-Dichloroethene	ND	1.0	ug/L	0.27
trans-1,2-Dichloroethene	ND	1.0	ug/L	0.080
1,1-Dichloroethene	ND	1.0	ug/L	0.040
1,2-Dichloropropane	ND	1.0	ug/L	0.10
cis-1,3-Dichloropropene	ND	1.0	ug/L	0.13
trans-1,3-Dichloropropene	ND	1.0	ug/L	0.070
Ethylbenzene	ND	1.0	ug/L	0.070
2-Hexanone	ND	5.0	ug/L	0.20
Methylene chloride	**0.35 J**	**1.0**	**ug/L**	**0.12**
4-Methyl-2-pentanone (MIBK)	ND	5.0	ug/L	0.10
Styrene	ND	1.0	ug/L	0.13
1,1,2,2-Tetrachloroethane	ND	1.0	ug/L	0.080
Tetrachloroethene	ND	1.0	ug/L	0.10
Toluene	ND	1.0	ug/L	0.080
1,1,1-Trichloroethane	ND	1.0	ug/L	0.080
1,1,2-Trichloroethane	ND	1.0	ug/L	0.070
Trichloroethene	ND	1.0	ug/L	0.13
Vinyl chloride	ND	1.0	ug/L	0.070
Xylenes (total)	ND	1.0	ug/L	0.13
1,2-Dichlorobenzene	ND	1.0	ug/L	0.090
1,3-Dichlorobenzene	ND	1.0	ug/L	0.040
1,4-Dichlorobenzene	ND	1.0	ug/L	0.090

(Continued on next page)

GTE OPERATIONS SUPPORT INCORPORATED

Client Sample ID: TB-2/22/05

GC/MS Volatiles

Lot-Sample #...: F5B230206-002 Work Order #...: G402W1AA Matrix.....: WATER

SURROGATE	PERCENT RECOVERY	RECOVERY LIMITS
Toluene-d8	108	(85 - 117)
Dibromofluoromethane	108	(72 - 136)
1,2-Dichloroethane-d4	116	(78 - 125)
4-Bromofluorobenzene	107	(79 - 120)

NOTE(S):

J Estimated result. Result is less than RL.

GTE OPERATIONS SUPPORT INCORPORATED

TB-2/22/05

GC/MS Volatiles

Lot-Sample #: F5B230206-002 **Work Order #:** G402W1AA **Matrix:** WATER

MASS SPECTROMETER/DATA SYSTEM (MSDS) TENTATIVELY IDENTIFIED COMPOUNDS

PARAMETER	CAS #	ESTIMATED RESULT	RETENTION TIME	UNITS
None				ug/L

SEVERN TRENT STL

STL St. Louis
13715 Rider Trail North
Earth City, MO 63045

Tel: 314 298 8566 Fax: 314 298 8757
www.stl-inc.com

ANALYTICAL REPORT

GTE Hicksville HQE03060

Lot #: F5B230206

Carol Scholl

URS
1701 Golf Road
Suite 1000
Rolling Meadows, IL 60008

SEVERN TRENT LABORATORIES, INC.

Kay Clay
Project Manager

March 10, 2005

METHOD BLANK REPORT

GC/MS Volatiles

Client Lot #...: F5B230206 **Work Order #...:** G5Q551AA **Matrix.....:** WATER
MB Lot-Sample #: F5C080000-291

Prep Date.....: 03/07/05 **Analysis Time..:** 13:43
Analysis Date..: 03/07/05 **Prep Batch #...:** 5067291
Dilution Factor: 1

PARAMETER	RESULT	REPORTING LIMIT	UNITS	METHOD
Acetone	ND	2.0	ug/L	SW846 8260B
Benzene	ND	1.0	ug/L	SW846 8260B
Bromodichloromethane	ND	1.0	ug/L	SW846 8260B
Bromoform	ND	1.0	ug/L	SW846 8260B
Bromomethane	ND	2.0	ug/L	SW846 8260B
2-Butanone	ND	5.0	ug/L	SW846 8260B
Carbon disulfide	ND	1.0	ug/L	SW846 8260B
Carbon tetrachloride	ND	1.0	ug/L	SW846 8260B
Chlorobenzene	ND	1.0	ug/L	SW846 8260B
Dibromochloromethane	ND	1.0	ug/L	SW846 8260B
Chloroethane	ND	2.0	ug/L	SW846 8260B
Chloroform	ND	1.0	ug/L	SW846 8260B
Chloromethane	ND	2.0	ug/L	SW846 8260B
1,2-Dichlorobenzene	ND	1.0	ug/L	SW846 8260B
1,3-Dichlorobenzene	ND	1.0	ug/L	SW846 8260B
1,4-Dichlorobenzene	**0.12 J**	**1.0**	**ug/L**	**SW846 8260B**
1,1-Dichloroethane	ND	1.0	ug/L	SW846 8260B
1,2-Dichloroethane	ND	1.0	ug/L	SW846 8260B
1,1-Dichloroethene	ND	1.0	ug/L	SW846 8260B
cis-1,2-Dichloroethene	ND	1.0	ug/L	SW846 8260B
trans-1,2-Dichloroethene	ND	1.0	ug/L	SW846 8260B
1,2-Dichloropropane	ND	1.0	ug/L	SW846 8260B
cis-1,3-Dichloropropene	ND	1.0	ug/L	SW846 8260B
trans-1,3-Dichloropropene	ND	1.0	ug/L	SW846 8260B
Ethylbenzene	ND	1.0	ug/L	SW846 8260B
2-Hexanone	ND	5.0	ug/L	SW846 8260B
Methylene chloride	ND	1.0	ug/L	SW846 8260B
Styrene	ND	1.0	ug/L	SW846 8260B
1,1,2,2-Tetrachloroethane	ND	1.0	ug/L	SW846 8260B
Tetrachloroethene	ND	1.0	ug/L	SW846 8260B
Toluene	ND	1.0	ug/L	SW846 8260B
1,1,1-Trichloroethane	ND	1.0	ug/L	SW846 8260B
1,1,2-Trichloroethane	ND	1.0	ug/L	SW846 8260B
Trichloroethene	ND	1.0	ug/L	SW846 8260B
Vinyl chloride	ND	1.0	ug/L	SW846 8260B
Xylenes (total)	ND	1.0	ug/L	SW846 8260B
4-Methyl-2-pentanone (MIBK)	ND	5.0	ug/L	SW846 8260B

(Continued on next page)

METHOD BLANK REPORT

GC/MS Volatiles

Client Lot #...: F5B230206 Work Order #...: G5Q551AA Matrix.....: WATER

PARAMETER	RESULT	REPORTING LIMIT	UNITS	METHOD

SURROGATE	PERCENT RECOVERY	RECOVERY LIMITS
Toluene-d8	104	(85 - 117)
Dibromofluoromethane	104	(72 - 136)
1,2-Dichloroethane-d4	108	(78 - 125)
4-Bromofluorobenzene	102	(79 - 120)

NOTE(S):

Calculations are performed before rounding to avoid round-off errors in calculated results.

J Estimated result. Result is less than RL.

GTE OPERATIONS SUPPORT INCORPORATED

Method Blank Report

GC/MS Volatiles

Lot-Sample #: F5C080000-291 B **Work Order #:** G5Q551AA **Matrix:** WATER

MASS SPECTROMETER/DATA SYSTEM (MSDS) TENTATIVELY IDENTIFIED COMPOUNDS

PARAMETER	CAS #	ESTIMATED RESULT	RETENTION TIME	UNITS
None				ug/L

METHOD BLANK REPORT

TCLP GC/MS Volatiles

Client Lot #...: F5B230206 **Work Order #...:** G435M1AA **Matrix.....:** SOLID
MB Lot-Sample #: F5B240000-369
Leach Date.....: 02/24/05 **Prep Date.....:** 03/03/05 **Analysis Date..:** 03/03/05
Leach Batch #..: P505516 **Prep Batch #...:** 5056126 **Analysis Time..:** 15:45
Dilution Factor: 1

PARAMETER	RESULT	REPORTING LIMIT	UNITS	METHOD
Vinyl chloride	ND	100	ug/L	SW846 8260B
1,1-Dichloroethene	ND	50	ug/L	SW846 8260B
2-Butanone	ND	50	ug/L	SW846 8260B
Chloroform	ND	50	ug/L	SW846 8260B
Carbon tetrachloride	ND	50	ug/L	SW846 8260B
1,2-Dichloroethane	ND	50	ug/L	SW846 8260B
Benzene	ND	50	ug/L	SW846 8260B
Trichloroethene	ND	50	ug/L	SW846 8260B
Tetrachloroethene	ND	50	ug/L	SW846 8260B
Chlorobenzene	ND	50	ug/L	SW846 8260B

SURROGATE	PERCENT RECOVERY	RECOVERY LIMITS
Dibromofluoromethane	103	(71 - 138)
Toluene-d8	101	(81 - 121)
4-Bromofluorobenzene	98	(82 - 123)
1,2-Dichloroethane-d4	100	(83 - 126)

NOTE(S):

Calculations are performed before rounding to avoid round-off errors in calculated results.

METHOD BLANK REPORT

GC/MS Semivolatiles

Client Lot #...: F5B230206 Work Order #...: G5A751AA Matrix.....: SOLID
MB Lot-Sample #: F5C010000-429

Prep Date.....: 03/01/05 Analysis Time..: 02:43
Analysis Date..: 03/03/05 Prep Batch #...: 5060429
Dilution Factor: 1

PARAMETER	RESULT	REPORTING LIMIT	UNITS	METHOD
Pyridine	ND	100	ug/L	SW846 8270C
1,4-Dichlorobenzene	ND	50	ug/L	SW846 8270C
2-Methylphenol	ND	50	ug/L	SW846 8270C
3-Methylphenol & 4-Methylphenol	ND	50	ug/L	SW846 8270C
Hexachloroethane	ND	50	ug/L	SW846 8270C
Nitrobenzene	ND	50	ug/L	SW846 8270C
Hexachlorobutadiene	ND	50	ug/L	SW846 8270C
2,4,6-Trichloro-phenol	ND	50	ug/L	SW846 8270C
2,4,5-Trichloro-phenol	ND	50	ug/L	SW846 8270C
2,4-Dinitrotoluene	ND	50	ug/L	SW846 8270C
Hexachlorobenzene	ND	50	ug/L	SW846 8270C
Pentachlorophenol	ND	250	ug/L	SW846 8270C

SURROGATE	PERCENT RECOVERY	RECOVERY LIMITS
2-Fluorophenol	31	(10 - 86)
Phenol-d5	21	(10 - 95)
Nitrobenzene-d5	60	(50 - 104)
2-Fluorobiphenyl	53	(41 - 111)
Terphenyl-d14	53	(19 - 119)
2,4,6-Tribromophenol	59	(17 - 121)

NOTE(S):

Calculations are performed before rounding to avoid round-off errors in calculated results.

GTE OPERATIONS SUPPORT INCORPORATED

Method Blank Report

GC/MS Semivolatiles

Lot-Sample #: F5C010000-429 B **Work Order #:** G5A751AA **Matrix:** SOLID

MASS SPECTROMETER/DATA SYSTEM (MSDS) TENTATIVELY IDENTIFIED COMPOUNDS

PARAMETER	CAS #	ESTIMATED RESULT		RETENTION TIME	UNITS
n-Propyl acetate	109-60-4	60	M	2.216	ug/L
Propanoic acid, 2-methyl-, 1-m	617-50-5	45	M	3.162	ug/L
Butanoic acid, 1-methylethyl e	638-11-9	52	M	3.669	ug/L

NOTE(S):

M: Result was measured against nearest internal standard assuming a response factor of 1.

METHOD BLANK REPORT

GC Semivolatiles

Client Lot #...: F5B230206 **Work Order #...:** G49LN1AA **Matrix.....:** SOLID
MB Lot-Sample #: F5B280000-576
Prep Date.....: 02/28/05 **Analysis Time..:** 06:44
Analysis Date..: 03/02/05 **Prep Batch #...:** 5059576
Dilution Factor: 1

PARAMETER	RESULT	REPORTING LIMIT	UNITS	METHOD
Chlordane (technical)	ND	5.0	ug/L	SW846 8081A
Endrin	ND	0.50	ug/L	SW846 8081A
gamma-BHC (Lindane)	ND	0.50	ug/L	SW846 8081A
Heptachlor	ND	0.50	ug/L	SW846 8081A
Heptachlor epoxide	ND	0.50	ug/L	SW846 8081A
Methoxychlor	ND	1.0	ug/L	SW846 8081A
Toxaphene	ND	20	ug/L	SW846 8081A

SURROGATE	PERCENT RECOVERY	RECOVERY LIMITS
Tetrachloro-m-xylene	80	(47 - 126)
Decachlorobiphenyl	101	(42 - 138)

NOTE(S):

Calculations are performed before rounding to avoid round-off errors in calculated results.

METHOD BLANK REPORT

GC Semivolatiles

Client Lot #...: F5B230206
MB Lot-Sample #: F5B280000-577
Work Order #...: G49LG1AA
Matrix.....: SOLID
Prep Date.....: 02/28/05
Analysis Time..: 10:34
Analysis Date..: 03/05/05
Prep Batch #...: 5059577
Dilution Factor: 1

PARAMETER	RESULT	REPORTING LIMIT	UNITS	METHOD
2,4-D	ND	40	ug/L	SW846 8151A
2,4,5-TP (Silvex)	ND	10	ug/L	SW846 8151A

SURROGATE	PERCENT RECOVERY	RECOVERY LIMITS
2,4-Dichlorophenylacetic acid	59	(49 - 123)

NOTE(S):

Calculations are performed before rounding to avoid round-off errors in calculated results.

METHOD BLANK REPORT

TCLP Metals

Client Lot #...: F5B230206 **Matrix.....:** SOLID

PARAMETER	RESULT	REPORTING LIMIT	UNITS	METHOD	PREPARATION-ANALYSIS DATE	WORK ORDER #
MB Lot-Sample #: F5B240000-363 **Prep Batch #...:** 5056337						
Leach Date.....: 02/24/05 **Leach Batch #..:** P505515						
Arsenic	ND	400	ug/L	SW846 6010B	02/25-02/28/05	G435A1AC
		Dilution Factor: 2				
		Analysis Time..: 08:52				
Barium	**59.2 B**	**400**	**ug/L**	**SW846 6010B**	**02/25-02/28/05**	**G435A1AD**
		Dilution Factor: 2				
		Analysis Time..: 08:52				
Cadmium	ND	20.0	ug/L	SW846 6010B	02/25-02/28/05	G435A1AE
		Dilution Factor: 2				
		Analysis Time..: 08:52				
Chromium	ND	40.0	ug/L	SW846 6010B	02/25-02/28/05	G435A1AF
		Dilution Factor: 2				
		Analysis Time..: 08:52				
Lead	ND	200	ug/L	SW846 6010B	02/25-02/28/05	G435A1AG
		Dilution Factor: 2				
		Analysis Time..: 08:52				
Silver	ND	40.0	ug/L	SW846 6010B	02/25-02/28/05	G435A1AH
		Dilution Factor: 2				
		Analysis Time..: 08:52				
Selenium	ND	400	ug/L	SW846 6010B	02/25-02/28/05	G435A1AJ
		Dilution Factor: 2				
		Analysis Time..: 08:52				
Copper	ND	100	ug/L	SW846 6010B	02/25-02/28/05	G435A1A4
		Dilution Factor: 2				
		Analysis Time..: 08:52				
Zinc	**7.6 B**	**200**	**ug/L**	**SW846 6010B**	**02/25-02/28/05**	**G435A1A0**
		Dilution Factor: 2				
		Analysis Time..: 08:52				
MB Lot-Sample #: F5B240000-363 **Prep Batch #...:** 5056077						
Leach Date.....: 02/24/05 **Leach Batch #..:** P505515						
Mercury	ND	10.0	ug/L	SW846 7470A	02/25/05	G435A1AA
		Dilution Factor: 5				
		Analysis Time..: 14:18				

(Continued on next page)

METHOD BLANK REPORT

TCLP Metals

Client Lot #...: F5B230206 Matrix.....: SOLID

NOTE(S):

Calculations are performed before rounding to avoid round-off errors in calculated results.

B Estimated result. Result is less than RL.

METHOD BLANK REPORT

General Chemistry

Client Lot #...: F5B230206 Matrix.....: SOLID

PARAMETER	RESULT	REPORTING LIMIT	UNITS	METHOD	PREPARATION-ANALYSIS DATE	PREP BATCH #
Reactive Cyanide		Work Order #: G5A8N1AA		MB Lot-Sample #:	F5C010000-434	
	ND	0.050	mg/kg	SW846 7.3.3	03/01-03/03/05	5060434
		Dilution Factor: 1				
		Analysis Time..: 00:00				
Reactive Sulfide		Work Order #: G473E1AA		MB Lot-Sample #:	F5B280000-064	
	ND	4.4	mg/kg	SW846 7.3.4	02/25-02/28/05	5059064
		Dilution Factor: 1				
		Analysis Time..: 00:00				

NOTE(S):

Calculations are performed before rounding to avoid round-off errors in calculated results.

LABORATORY CONTROL SAMPLE EVALUATION REPORT

GC/MS Volatiles

Client Lot #...: F5B230206 Work Order #...: G5Q551AC-LCS Matrix.....: WATER
LCS Lot-Sample#: F5C080000-291 G5Q551AD-LCSD
Prep Date.....: 03/07/05 Analysis Date..: 03/07/05
Prep Batch #...: 5067291 Analysis Time..: 12:33
Dilution Factor: 1

PARAMETER	PERCENT RECOVERY	RECOVERY LIMITS	RPD	RPD LIMITS	METHOD
cis-1,3-Dichloropropene	105	(77 - 128)			SW846 8260B
	107	(77 - 128)	2.5	(0-20)	SW846 8260B
Dibromochloromethane	114	(78 - 138)			SW846 8260B
	106	(78 - 138)	7.6	(0-20)	SW846 8260B
Chloromethane	80	(10 - 150)			SW846 8260B
	83	(10 - 150)	4.0	(0-20)	SW846 8260B
Vinyl chloride	88	(10 - 150)			SW846 8260B
	86	(10 - 150)	2.7	(0-20)	SW846 8260B
Bromomethane	78	(10 - 150)			SW846 8260B
	74	(10 - 150)	4.3	(0-20)	SW846 8260B
Chloroethane	99	(37 - 136)			SW846 8260B
	99	(37 - 136)	0.17	(0-20)	SW846 8260B
Acetone	112	(25 - 150)			SW846 8260B
	111	(25 - 150)	0.44	(0-20)	SW846 8260B
1,1-Dichloroethene	94	(57 - 128)			SW846 8260B
	93	(57 - 128)	1.0	(0-20)	SW846 8260B
Methylene chloride	97	(54 - 119)			SW846 8260B
	112	(54 - 119)	14	(0-20)	SW846 8260B
Carbon disulfide	101	(44 - 150)			SW846 8260B
	97	(44 - 150)	3.5	(0-20)	SW846 8260B
1,1-Dichloroethane	101	(83 - 118)			SW846 8260B
	101	(83 - 118)	0.39	(0-20)	SW846 8260B
2-Butanone	24 a	(51 - 143)			SW846 8260B
	22 a	(51 - 143)	8.5	(0-20)	SW846 8260B
Chloroform	100	(81 - 120)			SW846 8260B
	98	(81 - 120)	1.8	(0-20)	SW846 8260B
1,1,1-Trichloroethane	107	(79 - 120)			SW846 8260B
	101	(79 - 120)	5.6	(0-20)	SW846 8260B
Carbon tetrachloride	105	(75 - 126)			SW846 8260B
	103	(75 - 126)	2.5	(0-20)	SW846 8260B
1,2-Dichloroethane	109	(73 - 126)			SW846 8260B
	109	(73 - 126)	0.0	(0-20)	SW846 8260B
Benzene	104	(85 - 114)			SW846 8260B
	101	(85 - 114)	2.3	(0-20)	SW846 8260B
Trichloroethene	100	(77 - 117)			SW846 8260B
	97	(77 - 117)	2.3	(0-20)	SW846 8260B
1,2-Dichloropropane	104	(79 - 128)			SW846 8260B
	104	(79 - 128)	0.48	(0-20)	SW846 8260B
Bromodichloromethane	108	(77 - 126)			SW846 8260B
	106	(77 - 126)	2.0	(0-20)	SW846 8260B

(Continued on next page)

LABORATORY CONTROL SAMPLE EVALUATION REPORT

GC/MS Volatiles

Client Lot #...: F5B230206 Work Order #...: G5Q551AC-LCS Matrix.....: WATER
LCS Lot-Sample#: F5C080000-291 G5Q551AD-LCSD

PARAMETER	PERCENT RECOVERY	RECOVERY LIMITS	RPD	RPD LIMITS	METHOD
1,1,2-Trichloroethane	108	(79 - 124)			SW846 8260B
	103	(79 - 124)	5.0	(0-20)	SW846 8260B
trans-1,3-Dichloropropene	116	(85 - 140)			SW846 8260B
	109	(85 - 140)	6.8	(0-20)	SW846 8260B
Toluene	103	(85 - 120)			SW846 8260B
	94	(85 - 120)	9.2	(0-20)	SW846 8260B
1,3-Dichlorobenzene	108	(85 - 116)			SW846 8260B
	104	(85 - 116)	3.9	(0-20)	SW846 8260B
1,4-Dichlorobenzene	107	(85 - 112)			SW846 8260B
	101	(85 - 112)	5.6	(0-20)	SW846 8260B
1,2-Dichlorobenzene	113	(85 - 116)			SW846 8260B
	107	(85 - 116)	5.5	(0-20)	SW846 8260B
2-Hexanone	113	(46 - 145)			SW846 8260B
	108	(46 - 145)	5.0	(0-20)	SW846 8260B
4-Methyl-2-pentanone (MIBK	104	(52 - 144)			SW846 8260B
	110	(52 - 144)	5.0	(0-20)	SW846 8260B
Chlorobenzene	104	(85 - 114)			SW846 8260B
	97	(85 - 114)	7.0	(0-20)	SW846 8260B
Bromoform	122	(63 - 144)			SW846 8260B
	116	(63 - 144)	4.7	(0-20)	SW846 8260B
Ethylbenzene	103	(85 - 116)			SW846 8260B
	94	(85 - 116)	9.2	(0-20)	SW846 8260B
Styrene	109	(85 - 119)			SW846 8260B
	102	(85 - 119)	6.4	(0-20)	SW846 8260B
1,1,2,2-Tetrachloroethane	109	(74 - 135)			SW846 8260B
	108	(74 - 135)	0.73	(0-20)	SW846 8260B
Tetrachloroethene	85	(73 - 122)			SW846 8260B
	78	(73 - 122)	8.9	(0-20)	SW846 8260B
1,2-Dichloroethene (total)	99	(83 - 121)			SW846 8260B
	98	(83 - 121)	0.96	(0-20)	SW846 8260B
m-Xylene & p-Xylene	109	(85 - 118)			SW846 8260B
	99	(85 - 118)	9.6	(0-20)	SW846 8260B
o-Xylene	106	(85 - 120)			SW846 8260B
	98	(85 - 120)	7.8	(0-20)	SW846 8260B

SURROGATE	PERCENT RECOVERY	RECOVERY LIMITS
Toluene-d8	101	(85 - 117)
	101	(85 - 117)
Dibromofluoromethane	104	(76 - 131)
	105	(76 - 131)
1,2-Dichloroethane-d4	101	(76 - 125)
	104	(76 - 125)

(Continued on next page)

LABORATORY CONTROL SAMPLE EVALUATION REPORT

GC/MS Volatiles

Client Lot #...: F5B230206 Work Order #...: G5Q551AC-LCS Matrix.....: WATER
LCS Lot-Sample#: F5C080000-291 G5Q551AD-LCSD

SURROGATE	PERCENT RECOVERY	RECOVERY LIMITS
4-Bromofluorobenzene	98	(82 - 121)
	94	(82 - 121)

NOTE(S):

Calculations are performed before rounding to avoid round-off errors in calculated results.

Bold print denotes control parameters

a Spiked analyte recovery is outside stated control limits.

LABORATORY CONTROL SAMPLE EVALUATION REPORT

GC/MS Volatiles

Client Lot #...: F5B230206 Work Order #...: G5H6E1AA Matrix.....: SOLID
LCS Lot-Sample#: F5B250000-126
Prep Date.....: 03/03/05 Analysis Date..: 03/03/05
Prep Batch #...: 5056126 Analysis Time..: 16:17
Dilution Factor: 1

PARAMETER	PERCENT RECOVERY	RECOVERY LIMITS	METHOD
Vinyl chloride	**99**	**(10 - 150)**	**SW846 8260B**
1,1-Dichloroethene	**81**	**(57 - 130)**	**SW846 8260B**
2-Butanone	**88**	**(51 - 144)**	**SW846 8260B**
Chloroform	**96**	**(83 - 118)**	**SW846 8260B**
Carbon tetrachloride	**94**	**(78 - 121)**	**SW846 8260B**
1,2-Dichloroethane	**95**	**(77 - 116)**	**SW846 8260B**
Benzene	**98**	**(81 - 111)**	**SW846 8260B**
Trichloroethene	**92**	**(76 - 117)**	**SW846 8260B**
Tetrachloroethene	**94**	**(58 - 119)**	**SW846 8260B**
Chlorobenzene	**98**	**(82 - 118)**	**SW846 8260B**

SURROGATE	PERCENT RECOVERY	RECOVERY LIMITS
Dibromofluoromethane	103	(87 - 120)
Toluene-d8	104	(84 - 118)
4-Bromofluorobenzene	99	(82 - 121)
1,2-Dichloroethane-d4	98	(83 - 118)

NOTE(S):

Calculations are performed before rounding to avoid round-off errors in calculated results.

Bold print denotes control parameters

LABORATORY CONTROL SAMPLE EVALUATION REPORT

GC/MS Semivolatiles

Client Lot #...: F5B230206 Work Order #...: G5A751AC Matrix.....: SOLID
LCS Lot-Sample#: F5C010000-429
Prep Date.....: 03/01/05 Analysis Date..: 03/03/05
Prep Batch #...: 5060429 Analysis Time..: 03:19
Dilution Factor: 1

PARAMETER	PERCENT RECOVERY	RECOVERY LIMITS	METHOD
Pyridine	29	(10 - 91)	SW846 8270C
1,4-Dichlorobenzene	57	(34 - 87)	SW846 8270C
2-Methylphenol	52	(24 - 91)	SW846 8270C
3-Methylphenol & 4-Methylphenol	52	(18 - 88)	SW846 8270C
Hexachloroethane	55	(33 - 89)	SW846 8270C
Nitrobenzene	73	(41 - 99)	SW846 8270C
Hexachlorobutadiene	53	(28 - 91)	SW846 8270C
2,4,6-Trichlorophenol	70	(15 - 106)	SW846 8270C
2,4,5-Trichlorophenol	68	(16 - 110)	SW846 8270C
2,4-Dinitrotoluene	75	(39 - 104)	SW846 8270C
Hexachlorobenzene	66	(44 - 101)	SW846 8270C
Pentachlorophenol	60	(10 - 117)	SW846 8270C

SURROGATE	PERCENT RECOVERY	RECOVERY LIMITS
2-Fluorophenol	40	(10 - 91)
Phenol-d5	29	(10 - 94)
Nitrobenzene-d5	73	(44 - 104)
2-Fluorobiphenyl	67	(43 - 107)
Terphenyl-d14	59	(32 - 120)
2,4,6-Tribromophenol	74	(17 - 119)

NOTE(S):

Calculations are performed before rounding to avoid round-off errors in calculated results.

Bold print denotes control parameters

LABORATORY CONTROL SAMPLE EVALUATION REPORT

GC Semivolatiles

Client Lot #...: F5B230206 **Work Order #...:** G49LN1AC **Matrix.....:** SOLID
LCS Lot-Sample#: F5B280000-576
Prep Date.....: 02/28/05 **Analysis Date..:** 03/02/05
Prep Batch #...: 5059576 **Analysis Time..:** 07:07
Dilution Factor: 1

PARAMETER	PERCENT RECOVERY	RECOVERY LIMITS	METHOD
Endrin	**104**	**(72 - 125)**	**SW846 8081A**
gamma-BHC (Lindane)	**99**	**(77 - 117)**	**SW846 8081A**
Heptachlor	**86**	**(48 - 119)**	**SW846 8081A**
Heptachlor epoxide	**99**	**(75 - 111)**	**SW846 8081A**
Methoxychlor	**111**	**(75 - 124)**	**SW846 8081A**

SURROGATE	PERCENT RECOVERY	RECOVERY LIMITS
Tetrachloro-m-xylene	88	(58 - 121)
Decachlorobiphenyl	101	(67 - 127)

NOTE(S):

Calculations are performed before rounding to avoid round-off errors in calculated results.

Bold print denotes control parameters

LABORATORY CONTROL SAMPLE EVALUATION REPORT

GC Semivolatiles

Client Lot #...: F5B230206 Work Order #...: G49LG1AC Matrix.....: SOLID
LCS Lot-Sample#: F5B280000-577
Prep Date.....: 02/28/05 Analysis Date..: 03/05/05
Prep Batch #...: 5059577 Analysis Time..: 11:06
Dilution Factor: 1

PARAMETER	PERCENT RECOVERY	RECOVERY LIMITS	METHOD
2,4-D	**81**	**(41 - 125)**	**SW846 8151A**
2,4,5-TP (Silvex)	**81**	**(46 - 138)**	**SW846 8151A**

SURROGATE	PERCENT RECOVERY	RECOVERY LIMITS
2,4-Dichlorophenylacetic acid	84	(37 - 137)

NOTE(S):

Calculations are performed before rounding to avoid round-off errors in calculated results.

Bold print denotes control parameters

LABORATORY CONTROL SAMPLE EVALUATION REPORT

TCLP Metals

Client Lot #...: F5B230206 **Matrix.....:** SOLID

PARAMETER	PERCENT RECOVERY	RECOVERY LIMITS	METHOD	PREPARATION-ANALYSIS DATE	WORK ORDER #
LCS Lot-Sample#: F5B250000-077 **Prep Batch #...:** 5056077					
Mercury	101	(82 - 125)	SW846 7470A	02/25/05	G446E1AA
		Dilution Factor: 5	Analysis Time..: 14:24		
LCS Lot-Sample#: F5B250000-337 **Prep Batch #...:** 5056337					
Arsenic	103	(80 - 120)	SW846 6010B	02/25-02/28/05	G456K1AA
		Dilution Factor: 2	Analysis Time..: 08:56		
Barium	101	(80 - 120)	SW846 6010B	02/25-02/28/05	G456K1AC
		Dilution Factor: 2	Analysis Time..: 08:56		
Cadmium	97	(80 - 120)	SW846 6010B	02/25-02/28/05	G456K1AD
		Dilution Factor: 2	Analysis Time..: 08:56		
Chromium	96	(80 - 120)	SW846 6010B	02/25-02/28/05	G456K1AE
		Dilution Factor: 2	Analysis Time..: 08:56		
Lead	97	(80 - 120)	SW846 6010B	02/25-02/28/05	G456K1AF
		Dilution Factor: 2	Analysis Time..: 08:56		
Silver	100	(80 - 120)	SW846 6010B	02/25-02/28/05	G456K1AG
		Dilution Factor: 2	Analysis Time..: 08:56		
Selenium	105	(80 - 120)	SW846 6010B	02/25-02/28/05	G456K1AH
		Dilution Factor: 2	Analysis Time..: 08:56		
Copper	102	(80 - 120)	SW846 6010B	02/25-02/28/05	G456K1AK
		Dilution Factor: 2	Analysis Time..: 08:56		
Zinc	101	(80 - 120)	SW846 6010B	02/25-02/28/05	G456K1AJ
		Dilution Factor: 2	Analysis Time..: 08:56		

NOTE(S):

Calculations are performed before rounding to avoid round-off errors in calculated results.

LABORATORY CONTROL SAMPLE EVALUATION REPORT

General Chemistry

Client Lot #...: F5B230206 **Matrix.....:** SOLID

PARAMETER	PERCENT RECOVERY	RECOVERY LIMITS	METHOD	PREPARATION-ANALYSIS DATE	PREP BATCH #
pH (solid)		Work Order #: G46JR1AA	LCS Lot-Sample#: F5B250000-409		
	100	(99 - 101)	SW846 9045A	02/24/05	5056409
		Dilution Factor: 1	Analysis Time..: 00:00		
Flashpoint		Work Order #: G46WT1AA	LCS Lot-Sample#: F5B250000-455		
	99	(96 - 104)	SW846 1010	02/25/05	5056455
		Dilution Factor: 1	Analysis Time..: 00:00		
Reactive Cyanide		Work Order #: G5A8N1AC	LCS Lot-Sample#: F5C010000-434		
	17	(10 - 100)	SW846 7.3.3	03/01-03/03/05	5060434
		Dilution Factor: 1	Analysis Time..: 00:00		
Reactive Sulfide		Work Order #: G473E1AC	LCS Lot-Sample#: F5B280000-064		
	11	(10 - 150)	SW846 7.3.4	02/25-02/28/05	5059064
		Dilution Factor: 1	Analysis Time..: 00:00		

NOTE(S):

Calculations are performed before rounding to avoid round-off errors in calculated results.

MATRIX SPIKE SAMPLE EVALUATION REPORT

GC/MS Volatiles

Client Lot #...: F5B230206 Work Order #...: G406P1AC-MS Matrix.....: WATER
MS Lot-Sample #: F5B230216-018 G406P1AD-MSD
Date Sampled...: 02/21/05 10:00 Date Received..: 02/23/05
Prep Date.....: 03/07/05 Analysis Date..: 03/07/05
Prep Batch #...: 5067291 Analysis Time..: 18:31
Dilution Factor: 5

PARAMETER	PERCENT RECOVERY	RECOVERY LIMITS	RPD	RPD LIMITS	METHOD
cis-1,3-Dichloropropene	111	(75 - 127)			SW846 8260B
	111	(75 - 127)	0.30	(0-20)	SW846 8260B
Dibromochloromethane	103	(78 - 143)			SW846 8260B
	104	(78 - 143)	0.28	(0-20)	SW846 8260B
Chloromethane	78	(10 - 146)			SW846 8260B
	85	(10 - 146)	7.6	(0-20)	SW846 8260B
Vinyl chloride	78	(10 - 148)			SW846 8260B
	83	(10 - 148)	5.4	(0-20)	SW846 8260B
Bromomethane	75	(10 - 148)			SW846 8260B
	81	(10 - 148)	8.5	(0-20)	SW846 8260B
Chloroethane	98	(37 - 135)			SW846 8260B
	100	(37 - 135)	2.0	(0-20)	SW846 8260B
Acetone	102	(10 - 150)			SW846 8260B
	128 p	(10 - 150)	23	(0-20)	SW846 8260B
1,1-Dichloroethene	84	(54 - 129)			SW846 8260B
	84	(54 - 129)	0.16	(0-20)	SW846 8260B
Methylene chloride	90	(55 - 101)			SW846 8260B
	117 a,p	(55 - 101)	24	(0-20)	SW846 8260B
Carbon disulfide	94	(43 - 151)			SW846 8260B
	92	(43 - 151)	1.8	(0-20)	SW846 8260B
1,1-Dichloroethane	100	(79 - 118)			SW846 8260B
	102	(79 - 118)	2.6	(0-20)	SW846 8260B
2-Butanone	24 a	(45 - 138)			SW846 8260B
	24 a	(45 - 138)	2.7	(0-20)	SW846 8260B
Chloroform	100	(81 - 119)			SW846 8260B
	102	(81 - 119)	2.0	(0-20)	SW846 8260B
1,1,1-Trichloroethane	90	(78 - 120)			SW846 8260B
	92	(78 - 120)	1.8	(0-20)	SW846 8260B
Carbon tetrachloride	86	(70 - 130)			SW846 8260B
	89	(70 - 130)	3.2	(0-20)	SW846 8260B
1,2-Dichloroethane	116	(74 - 124)			SW846 8260B
	118	(74 - 124)	1.8	(0-20)	SW846 8260B
Benzene	102	(82 - 114)			SW846 8260B
	104	(82 - 114)	1.9	(0-20)	SW846 8260B
Trichloroethene	89	(68 - 124)			SW846 8260B
	92	(68 - 124)	2.5	(0-20)	SW846 8260B
1,2-Dichloropropane	108	(78 - 124)			SW846 8260B
	110	(78 - 124)	1.2	(0-20)	SW846 8260B
Bromodichloromethane	110	(77 - 127)			SW846 8260B
	110	(77 - 127)	0.07	(0-20)	SW846 8260B

(Continued on next page)

MATRIX SPIKE SAMPLE EVALUATION REPORT

GC/MS Volatiles

Client Lot #...: F5B230206 Work Order #...: G406P1AC-MS Matrix.....: WATER
MS Lot-Sample #: F5B230216-018 G406P1AD-MSD

PARAMETER	PERCENT RECOVERY	RECOVERY LIMITS	RPD	RPD LIMITS	METHOD
1,1,2-Trichloroethane	106	(77 - 126)			SW846 8260B
	107	(77 - 126)	0.48	(0-20)	SW846 8260B
trans-1,3-Dichloropropene	113	(83 - 140)			SW846 8260B
	114	(83 - 140)	0.73	(0-20)	SW846 8260B
Toluene	91	(84 - 117)			SW846 8260B
	92	(84 - 117)	2.0	(0-20)	SW846 8260B
1,3-Dichlorobenzene	95	(85 - 116)			SW846 8260B
	99	(85 - 116)	4.2	(0-20)	SW846 8260B
1,4-Dichlorobenzene	96	(85 - 113)			SW846 8260B
	98	(85 - 113)	2.9	(0-20)	SW846 8260B
1,2-Dichlorobenzene	99	(85 - 117)			SW846 8260B
	103	(85 - 117)	3.5	(0-20)	SW846 8260B
2-Hexanone	116	(43 - 134)			SW846 8260B
	119	(43 - 134)	2.2	(0-20)	SW846 8260B
4-Methyl-2-pentanone (MIB	119	(45 - 142)			SW846 8260B
	126	(45 - 142)	5.2	(0-20)	SW846 8260B
Chlorobenzene	97	(85 - 115)			SW846 8260B
	98	(85 - 115)	1.3	(0-20)	SW846 8260B
Bromoform	104	(64 - 149)			SW846 8260B
	108	(64 - 149)	3.8	(0-20)	SW846 8260B
Ethylbenzene	88	(85 - 116)			SW846 8260B
	90	(85 - 116)	2.3	(0-20)	SW846 8260B
Styrene	101	(74 - 128)			SW846 8260B
	102	(74 - 128)	1.2	(0-20)	SW846 8260B
1,1,2,2-Tetrachloroethane	106	(72 - 136)			SW846 8260B
	107	(72 - 136)	1.4	(0-20)	SW846 8260B
Tetrachloroethene	66 a	(73 - 122)			SW846 8260B
	67 a	(73 - 122)	1.7	(0-20)	SW846 8260B
1,2-Dichloroethene (total)	95	(80 - 123)			SW846 8260B
	105	(80 - 123)	10	(0-20)	SW846 8260B
m-Xylene & p-Xylene	95	(85 - 117)			SW846 8260B
	96	(85 - 117)	1.1	(0-20)	SW846 8260B
o-Xylene	97	(85 - 119)			SW846 8260B
	98	(85 - 119)	0.88	(0-20)	SW846 8260B

SURROGATE	PERCENT RECOVERY	RECOVERY LIMITS
Toluene-d8	100	(85 - 117)
	100	(85 - 117)

(Continued on next page)

MATRIX SPIKE SAMPLE EVALUATION REPORT

GC/MS Volatiles

Client Lot #...: F5B230206 **Work Order #...:** G406P1AC-MS **Matrix.....:** WATER
MS Lot-Sample #: F5B230216-018 G406P1AD-MSD

SURROGATE	PERCENT RECOVERY	RECOVERY LIMITS
Dibromofluoromethane	105	(72 - 136)
	106	(72 - 136)
1,2-Dichloroethane-d4	113	(78 - 125)
	113	(78 - 125)
4-Bromofluorobenzene	96	(79 - 120)
	95	(79 - 120)

NOTE(S):

Calculations are performed before rounding to avoid round-off errors in calculated results.

Bold print denotes control parameters

p Relative percent difference (RPD) is outside stated control limits.

a Spiked analyte recovery is outside stated control limits.

MATRIX SPIKE SAMPLE EVALUATION REPORT

TCLP GC/MS Volatiles

Client Lot #...: F5B230206 Work Order #...: G42WN1CA-MS Matrix.....: SOLID
MS Lot-Sample #: F5B240144-001 G42WN1CC-MSD
Date Sampled...: 02/22/05 09:30 Date Received..: 02/24/05
Leach Date.....: 02/24/05 Prep Date.....: 03/03/05 Analysis Date..: 03/03/05
Leach Batch #..: P505516 Prep Batch #...: 5056126 Analysis Time..: 17:22
Dilution Factor: 1

PARAMETER	PERCENT RECOVERY	RECOVERY LIMITS	RPD	RPD LIMITS	METHOD
Vinyl chloride	98	(10 - 150)			SW846 8260B
	93	(10 - 150)	5.5	(0-20)	SW846 8260B
1,1-Dichloroethene	80	(58 - 131)			SW846 8260B
	77	(58 - 131)	4.1	(0-20)	SW846 8260B
2-Butanone	90	(51 - 151)			SW846 8260B
	78	(51 - 151)	15	(0-20)	SW846 8260B
Chloroform	95	(83 - 125)			SW846 8260B
	94	(83 - 125)	0.71	(0-20)	SW846 8260B
Carbon tetrachloride	92	(75 - 126)			SW846 8260B
	91	(75 - 126)	0.81	(0-20)	SW846 8260B
1,2-Dichloroethane	95	(76 - 127)			SW846 8260B
	92	(76 - 127)	2.4	(0-20)	SW846 8260B
Benzene	96	(77 - 119)			SW846 8260B
	96	(77 - 119)	0.41	(0-20)	SW846 8260B
Trichloroethene	91	(47 - 150)			SW846 8260B
	90	(47 - 150)	0.41	(0-20)	SW846 8260B
Tetrachloroethene	91	(56 - 122)			SW846 8260B
	92	(56 - 122)	1.1	(0-20)	SW846 8260B
Chlorobenzene	95	(82 - 122)			SW846 8260B
	96	(82 - 122)	1.5	(0-20)	SW846 8260B

SURROGATE	PERCENT RECOVERY	RECOVERY LIMITS
Dibromofluoromethane	101	(71 - 138)
	100	(71 - 138)
Toluene-d8	98	(81 - 121)
	101	(81 - 121)
4-Bromofluorobenzene	96	(82 - 123)
	97	(82 - 123)
1,2-Dichloroethane-d4	98	(83 - 126)
	96	(83 - 126)

NOTE(S):

Calculations are performed before rounding to avoid round-off errors in calculated results.

Bold print denotes control parameters

MATRIX SPIKE SAMPLE EVALUATION REPORT

TCLP GC/MS Semivolatiles

Client Lot #...: F5B230206 Work Order #...: G44F41A2-MS Matrix.....: SOLID
MS Lot-Sample #: F5B240344-001 G44F41A3-MSD
Date Sampled...: 02/23/05 14:32 Date Received..: 02/24/05
Leach Date.....: 02/24/05 Prep Date.....: 03/01/05 Analysis Date..: 03/03/05
Leach Batch #..: P505604 Prep Batch #...: 5060429 Analysis Time..: 14:57
Dilution Factor: 1

PARAMETER	PERCENT RECOVERY	RECOVERY LIMITS	RPD	RPD LIMITS	METHOD
Pyridine	27	(10 - 97)			SW846 8270C
	22	(10 - 97)	18	(0-20)	SW846 8270C
1,4-Dichlorobenzene	51	(40 - 87)			SW846 8270C
	53	(40 - 87)	3.9	(0-20)	SW846 8270C
2-Methylphenol	57	(24 - 93)			SW846 8270C
	53	(24 - 93)	8.2	(0-20)	SW846 8270C
3-Methylphenol & 4-Methylphenol	55	(17 - 91)			SW846 8270C
	52	(17 - 91)	6.6	(0-20)	SW846 8270C
Hexachloroethane	47	(37 - 90)			SW846 8270C
	51	(37 - 90)	6.7	(0-20)	SW846 8270C
Nitrobenzene	74	(46 - 99)			SW846 8270C
	72	(46 - 99)	3.2	(0-20)	SW846 8270C
Hexachlorobutadiene	47	(31 - 92)			SW846 8270C
	50	(31 - 92)	5.4	(0-20)	SW846 8270C
2,4,6-Trichloro-phenol	70	(10 - 111)			SW846 8270C
	69	(10 - 111)	2.3	(0-20)	SW846 8270C
2,4,5-Trichloro-phenol	65	(13 - 113)			SW846 8270C
	64	(13 - 113)	2.6	(0-20)	SW846 8270C
2,4-Dinitrotoluene	77	(40 - 111)			SW846 8270C
	74	(40 - 111)	4.3	(0-20)	SW846 8270C
Hexachlorobenzene	69	(40 - 103)			SW846 8270C
	66	(40 - 103)	3.5	(0-20)	SW846 8270C
Pentachlorophenol	63	(12 - 121)			SW846 8270C
	60	(12 - 121)	4.5	(0-20)	SW846 8270C

SURROGATE	PERCENT RECOVERY	RECOVERY LIMITS
2-Fluorophenol	40	(10 - 86)
	38	(10 - 86)
Phenol-d5	30	(10 - 95)
	28	(10 - 95)
Nitrobenzene-d5	72	(50 - 104)
	69	(50 - 104)

(Continued on next page)

MATRIX SPIKE SAMPLE EVALUATION REPORT

TCLP GC/MS Semivolatiles

Client Lot #...: F5B230206 Work Order #...: G44F41A2-MS Matrix.....: SOLID
MS Lot-Sample #: F5B240344-001 G44F41A3-MSD

SURROGATE	PERCENT RECOVERY	RECOVERY LIMITS
2-Fluorobiphenyl	65	(41 - 111)
	62	(41 - 111)
Terphenyl-d14	61	(19 - 119)
	58	(19 - 119)
2,4,6-Tribromophenol	73	(17 - 121)
	69	(17 - 121)

NOTE(S):

Calculations are performed before rounding to avoid round-off errors in calculated results.

Bold print denotes control parameters

MATRIX SPIKE SAMPLE EVALUATION REPORT

GC Semivolatiles

Client Lot #...: F5B230206 Work Order #...: G42WN1A7-MS Matrix.....: SOLID
MS Lot-Sample #: F5B240144-001 G42WN1A8-MSD
Date Sampled...: 02/22/05 09:30 Date Received..: 02/24/05
Prep Date.....: 02/28/05 Analysis Date..: 03/02/05
Prep Batch #...: 5059576 Analysis Time..: 08:36
Dilution Factor: 1 % Moisture.....: 9.0

PARAMETER	PERCENT RECOVERY	RECOVERY LIMITS	RPD	RPD LIMITS	METHOD
Endrin	99	(67 - 132)			SW846 8081A
	97	(67 - 132)	2.0	(0-30)	SW846 8081A
gamma-BHC (Lindane)	98	(64 - 125)			SW846 8081A
	95	(64 - 125)	2.7	(0-30)	SW846 8081A
Heptachlor	82	(36 - 135)			SW846 8081A
	80	(36 - 135)	2.2	(0-30)	SW846 8081A
Heptachlor epoxide	96	(61 - 122)			SW846 8081A
	95	(61 - 122)	1.7	(0-30)	SW846 8081A
Methoxychlor	106	(68 - 131)			SW846 8081A
	104	(68 - 131)	1.5	(0-30)	SW846 8081A

SURROGATE	PERCENT RECOVERY	RECOVERY LIMITS
Tetrachloro-m-xylene	87	(47 - 126)
	80	(47 - 126)
Decachlorobiphenyl	101	(42 - 138)
	98	(42 - 138)

NOTE(S):

Calculations are performed before rounding to avoid round-off errors in calculated results.

Bold print denotes control parameters

MATRIX SPIKE SAMPLE EVALUATION REPORT

TCLP GC Semivolatiles

Client Lot #...: F5B230206 **Work Order #...:** G410G1A7-MS **Matrix.....:** SOLID
MS Lot-Sample #: F5B230335-002 G410G1A8-MSD
Date Sampled...: 02/21/05 11:00 **Date Received..:** 02/23/05
Leach Date.....: 02/24/05 **Prep Date.....:** 02/28/05 **Analysis Date..:** 03/05/05
Leach Batch #..: P505515 **Prep Batch #...:** 5059577 **Analysis Time..:** 16:59
Dilution Factor: 1

PARAMETER	PERCENT RECOVERY	RECOVERY LIMITS	RPD	RPD LIMITS	METHOD
2,4-D	**78**	**(42 - 123)**			**SW846 8151A**
	98 p	**(42 - 123)**	**23**	**(0-20)**	**SW846 8151A**
2,4,5-TP (Silvex)	**75**	**(46 - 141)**			**SW846 8151A**
	99 p	**(46 - 141)**	**27**	**(0-20)**	**SW846 8151A**

SURROGATE	PERCENT RECOVERY	RECOVERY LIMITS
2,4-Dichlorophenylacetic acid	82	(49 - 123)
	99	(49 - 123)

NOTE(S):

Calculations are performed before rounding to avoid round-off errors in calculated results.

Bold print denotes control parameters

p Relative percent difference (RPD) is outside stated control limits.

MATRIX SPIKE SAMPLE EVALUATION REPORT

TCLP Metals

Client Lot #...: F5B230206 **Matrix.....:** SOLID
Date Sampled...: 02/23/05 14:30 **Date Received..:** 02/23/05

PARAMETER	PERCENT RECOVERY	RECOVERY LIMITS	RPD	RPD LIMITS	METHOD	PREPARATION-ANALYSIS DATE	WORK ORDER #
MS Lot-Sample #: F5B230359-001 **Prep Batch #...:** 5056077							
Leach Date.....: 02/24/05 **Leach Batch #..:** P505515							
Mercury	102	(64 - 122)			SW846 7470A	02/25/05	G414K1CH
	104	(64 - 122)	2.3	(0-20)	SW846 7470A	02/25/05	G414K1CJ
		Dilution Factor: 5					
		Analysis Time..: 14:39					
MS Lot-Sample #: F5B230359-001 **Prep Batch #...:** 5056337							
Leach Date.....: 02/24/05 **Leach Batch #..:** P505515							
Arsenic	102	(83 - 111)			SW846 6010B	02/25-02/28/05	G414K1CK
	102	(83 - 111)	0.02	(0-20)	SW846 6010B	02/25-02/28/05	G414K1CL
		Dilution Factor: 2.5					
		Analysis Time..: 09:31					
Barium	98	(79 - 111)			SW846 6010B	02/25-02/28/05	G414K1CM
	98	(79 - 111)	0.12	(0-20)	SW846 6010B	02/25-02/28/05	G414K1CN
		Dilution Factor: 2.5					
		Analysis Time..: 09:31					
Cadmium	95	(65 - 122)			SW846 6010B	02/25-02/28/05	G414K1CP
	96	(65 - 122)	0.84	(0-20)	SW846 6010B	02/25-02/28/05	G414K1CQ
		Dilution Factor: 2.5					
		Analysis Time..: 09:31					
Chromium	96	(74 - 114)			SW846 6010B	02/25-02/28/05	G414K1CR
	96	(74 - 114)	0.12	(0-20)	SW846 6010B	02/25-02/28/05	G414K1CT
		Dilution Factor: 2.5					
		Analysis Time..: 09:31					
Lead	96	(65 - 121)			SW846 6010B	02/25-02/28/05	G414K1CU
	96	(65 - 121)	0.19	(0-20)	SW846 6010B	02/25-02/28/05	G414K1CV
		Dilution Factor: 2.5					
		Analysis Time..: 09:31					
Silver	98	(70 - 123)			SW846 6010B	02/25-02/28/05	G414K1CW
	98	(70 - 123)	0.10	(0-20)	SW846 6010B	02/25-02/28/05	G414K1CX
		Dilution Factor: 2.5					
		Analysis Time..: 09:31					

(Continued on next page)

MATRIX SPIKE SAMPLE EVALUATION REPORT

TCLP Metals

Client Lot #...: F5B230206 Matrix.....: SOLID
Date Sampled...: 02/23/05 14:30 Date Received..: 02/23/05

PARAMETER	PERCENT RECOVERY	RECOVERY LIMITS	RPD	RPD LIMITS	METHOD	PREPARATION-ANALYSIS DATE	WORK ORDER #
Selenium	103	(76 - 124)			SW846 6010B	02/25-02/28/05	G414K1C0
	103	(76 - 124)	0.18	(0-20)	SW846 6010B	02/25-02/28/05	G414K1C1

Dilution Factor: 2.5
Analysis Time..: 09:31

NOTE(S):

Calculations are performed before rounding to avoid round-off errors in calculated results.

MATRIX SPIKE SAMPLE EVALUATION REPORT

General Chemistry

Client Lot #...: F5B230206 **Matrix.....:** SOLID
Date Sampled...: 02/22/05 13:20 **Date Received..:** 02/23/05

PARAMETER	PERCENT RECOVERY	RECOVERY LIMITS	RPD	RPD LIMITS	METHOD	PREPARATION-ANALYSIS DATE	PREP BATCH #
						% Moisture.....: 1.4	
Reactive Cyanide		WO#: G40131A2-MS/G40131A3-MSD				MS Lot-Sample #: F5B230206-001	
	1.4 N	(10 - 100)			SW846 7.3.3	03/01-03/03/05	5060434
	1.8 N	(10 - 100)	20	(0-30)	SW846 7.3.3	03/01-03/03/05	5060434
		Dilution Factor: 1					
		Analysis Time..: 00:00					
						% Moisture.....: 1.4	
Reactive Sulfide		WO#: G40131A0-MS/G40131A1-MSD				MS Lot-Sample #: F5B230206-001	
	13	(10 - 136)			SW846 7.3.4	02/25-02/28/05	5059064
	13	(10 - 136)	0.0	(0-30)	SW846 7.3.4	02/25-02/28/05	5059064
		Dilution Factor: 1					
		Analysis Time..: 00:00					

NOTE(S):

Calculations are performed before rounding to avoid round-off errors in calculated results.

N Spiked analyte recovery is outside stated control limits.

Results and reporting limits have been adjusted for dry weight.

SAMPLE DUPLICATE EVALUATION REPORT

General Chemistry

Client Lot #...: F5B230206 **Work Order #...:** G4013-SMP G4013-DUP **Matrix.....:** SOLID

Date Sampled...: 02/22/05 13:20 **Date Received..:** 02/23/05

% Moisture.....: 1.4

PARAM	RESULT	DUPLICATE RESULT	UNITS	RPD	RPD LIMIT	METHOD	PREPARATION-ANALYSIS DATE	PREP BATCH #
pH (solid)						SD Lot-Sample #:	F5B230206-001	
	6.4	6.5	No Units	1.2	(0-30)	SW846 9045A	02/24/05	5056409

Dilution Factor: 1 Analysis Time..: 00:00

SAMPLE DUPLICATE EVALUATION REPORT

General Chemistry

Client Lot #...: F5B230206 Work Order #...: G42XW-SMP Matrix.....: SOLID
G42XW-DUP
Date Sampled...: 02/22/05 10:00 Date Received..: 02/24/05
% Moisture.....: 14

PARAM	RESULT	DUPLICATE RESULT	UNITS	RPD	RPD LIMIT	METHOD	PREPARATION-ANALYSIS DATE	PREP BATCH #
Flashpoint						SD Lot-Sample #:	F5B240144-003	
	>60.0	>60.0	deg C	0.0	(0-30)	SW846 1010	02/25/05	5056455

Dilution Factor: 1 Analysis Time..: 00:00

SAMPLE DUPLICATE EVALUATION REPORT

General Chemistry

Client Lot #...: F5B230206 Work Order #...: G44MT-SMP Matrix.....: SOLID
G44MT-DUP
Date Sampled...: 02/21/05 08:40 Date Received..: 02/24/05
% Moisture.....: 22

PARAM	RESULT	DUPLICATE RESULT	UNITS	RPD	RPD LIMIT	METHOD	PREPARATION-ANALYSIS DATE	PREP BATCH #
Percent Moisture						SD Lot-Sample #:	F5B240378-001	
	22.0	21.5	%	2.7	(0-30)	MCAWW 160.3 MOD	02/26-02/27/05	5060207

Dilution Factor: 1 Analysis Time..: 00:22

DB Analysis ID: 9,786

Sample Description: 74076-Carbon-Can-6 2-22-05

Spectrum Filename: 74076-~1.AN1

Acquisition Information

Start Time:	18-Mar-2005 9:59:51AM		
Live Time:	600.00	Real Time:	600.66
Dead Time:	0.11 %		
Detector ID:	3	Sample Size:	622 grams

Detector System: DSPE-294

Calibration

Description:	ENERGY Calibration for Detector #3 (1075-90-2) 3-18-05		
Filename:	C:\Gamma Spec\Calibrations\sand source ENERGY CAL (# 1075-90-2) 3-18-05.Clb		
Energy Created:	18-Mar-2005 8:10:01AM	Efficiency Created:	31-Dec-2004 10:10:35AM
Zero Offset:	0.189 keV	Gain:	0.250 keV/Channel

Library 1 File: GTEOSI New Shipping Regs.Lib Library based peak stripping used.

Analysis Parameters

Start Channel:	150 for an energy of 37.69 keV
Stop Channel:	8,000 for an energy of 2000.51 keV
Peak rejection level:	100.000 %
Activity Scaling Factor:	1,000,000 / 1 = 1,000,000
Detection Limit Method:	Currie limit
Additional random error:	0.0000
Additional systematic error:	0.0000
Fraction Limit:	0.0000%
Background Width:	Best method (based on spectrum)

Corrections	Status	Comments
Decay Correct to Date:	NO	
Decay During Acquisition:	NO	
Peaked Background Correction:	NO	
Absorption:	NO	
Geometry Correction:	NO	
Random Summing:	NO	

Energy Calibration Normalized Difference: 0.1251

3/18/200

Sample Description: 74076-Carbon-Can-6 2-22-05

Date Analyzed: 18-Mar-2005 at 9:59:51AM

Printed: 18-Mar-2005 at 10:10:01AM

Sample Description: 74076-Carbon-Can-6 2-22-05

UNIDENTIFIED PEAK SUMMARY

Peak Channel	Centroid Energy	Background Counts	Net Area Counts	Intensity Cts/Sec	Uncertainty Sigma%	FWHM keV	Suspected Nuclide	Code

s = Peak fails shape tests.

D = Peak area deconvoluted.

Sample Description: 74076-Carbon-Can-6 2-22-05

SUMMARY OF NUCLIDES IN SAMPLE

Nuclide		Time of Count Activity pCi/g	Total Uncertainty 2 Sigma pCi/g	Total Uncertainty 2 Sigma %	Minimum Detectable Activity pCi/g
AC-228		4.111E-001	1.565E-001	38.07	3.616E-002
BI-212	<		2.607E-003	3.48	7.496E-002
BI-214		1.751E+000	2.723E-001	15.56	1.675E-002
CS-137			1.259E-002	187.93	9.724E-003
K-40	#	1.713E-001	2.423E-001	141.46	1.409E-001
Pa-231	<		2.015E-002	3.48	5.795E-001
PA-234	<		1.876E-003	3.48	5.394E-002
Pa-234m	<		6.636E-002	3.48	1.908E+000
PB-212		3.515E-001	1.073E-001	30.52	3.642E-002
PB-214		1.735E+000	2.148E-001	12.38	4.259E-002
Ra-223		3.118E-001	2.219E-001	71.16	7.096E-002
RA-224	<		3.228E-002	3.48	9.280E-001
RA-226	~~#~~ <		3.641E-002	3.48	1.047E+000
TH-227	<		5.629E-003	3.48	1.618E-001
Th-231	<		2.471E-001	3.48	7.104E+000
TH-234		6.167E+000	3.086E+000	50.03	1.060E+000
TL-208		1.391E-001	5.476E-002	39.38	8.678E-003
U-235		5.333E-001	2.986E-001	56.00	1.320E-001

= All peaks for activity calculation had bad shape

LABORATORY CORRECTIONS:

Th-232 Activity Correction:	0.58	pCi/g
U-235 Activity Correction:	0.68	pCi/g
U-238 STL Alpha Spec. Correction:	8.33	pCi/g
U-238 STL Alpha Spec. Correction at the 2-Sigma UCL :	11.41	pCi/g

Total Activity (37.69 to 2,000.51 keV) 11.58 pCi/g

Analyzed by: _____
Gamma Spec Analyst

Reviewed by: _____ 3/18/05
Supervisor (or Peer Review for WS Samples)

Detector: 3 DSPE-294

Date Analyzed: 18-Mar-2005 at 9:59:51AM
Printed: 18-Mar-2005 at 10:10:01AM

DB Analysis ID: 555

Sample Description: 74075-Carbon-Can-5 2-22-05

Spectrum Filename: 74075-~1.AN1

Acquisition Information

Start Time:	18-Mar-2005 9:59:09AM		
Live Time:	600.00	Real Time:	600.52
Dead Time:	0.09 %		
Detector ID:	1	Sample Size:	686 grams

Detector System: DSPE-601

Calibration

Description:	1 Liter Marinelli Source (sand source # 1075-90-2) 3-18-05 det		
Filename:	C:\Gamma Spec\Calibrations\Energy Calibration Marinelli Detector 1 3-18-05.Clb		
Energy Created:	18-Mar-2005 7:25:29AM	Efficiency Created:	30-Dec-2004 11:03:13AM
Zero Offset:	0.014 keV	Gain:	0.250 keV/Channel

Library 1 File: GTEOSI New Shipping Regs.Lib Library based peak stripping used.

Analysis Parameters

Start Channel:	150 for an energy of 37.52 keV
Stop Channel:	8,000 for an energy of 2000.87 keV
Peak rejection level:	100.000 %
Activity Scaling Factor:	1,000,000 / 1 = 1,000,000
Detection Limit Method:	Currie limit
Additional random error:	0.0000
Additional systematic error:	0.0000
Fraction Limit:	0.0000%
Background Width:	Best method (based on spectrum)

Corrections

	Status	Comments
Decay Correct to Date:	NO	
Decay During Acquisition:	NO	
Peaked Background Correction:	NO	
Absorption:	NO	
Geometry Correction:	NO	
Random Summing:	NO	

Energy Calibration Normalized Difference: 0.1222

3/18/200

Sample Description: 74075-Carbon-Can-5 2-22-05

Date Analyzed: 18-Mar-2005 at 9:59:09AM

Printed: 18-Mar-2005 at 10:10:24AM

Sample Description: 74075-Carbon-Can-5 2-22-05

UNIDENTIFIED PEAK SUMMARY

Peak Channel	Centroid Energy	Background Counts	Net Area Counts	Intensity Cts/Sec	Uncertainty Sigma%	FWHM keV	Suspected Nuclide	Code

s = Peak fails shape tests.

D = Peak area deconvoluted.

3/18/200

Sample Description: 74075-Carbon-Can-5 2-22-05

SUMMARY OF NUCLIDES IN SAMPLE

Nuclide		Time of Count Activity pCi/g	Total Uncertainty 2 Sigma pCi/g	Total Uncertainty 2 Sigma %	Minimum Detectable Activity pCi/g
AC-228		4.297E-001	1.403E-001	32.65	1.894E-002
BI-212		3.629E-001	1.878E-001	51.77	3.979E-002
BI-214		1.578E+000	2.101E-001	13.32	2.381E-002
CS-137	<		4.246E-004	3.64	1.165E-002
K-40		4.172E-001	2.818E-001	67.56	7.169E-002
Pa-231		7.607E-001	6.127E-001	80.55	3.775E-001
PA-234		3.745E-001	1.135E-001	30.30	5.426E-002
Pa-234m	#	1.309E+000	2.323E+000	177.46	9.937E-001
PB-212		3.340E-001	7.405E-002	22.17	1.937E-002
PB-214		1.585E+000	1.922E-001	12.13	2.781E-002
Ra-223		2.500E-001	1.573E-001	62.91	7.984E-002
RA-224		7.098E-001	1.028E+000	144.78	5.685E-001
RA-226	~~#~~ c		2.234E-002	2.89	7.740E-001
TH-227		2.244E-001	1.873E-001	83.48	9.093E-002
Th-231	<		1.827E-001	2.89	6.330E+000
TH-234		5.294E+000	2.699E+000	50.98	1.038E+000
TL-208		1.317E-001	4.499E-002	34.15	1.010E-002
U-235		3.545E-001	2.423E-001	68.36	1.213E-001

= All peaks for activity calculation had bad shape

LABORATORY CORRECTIONS:

Th-232 Activity Correction:	0.61	pCi/g
U-235 Activity Correction:	0.45	pCi/g
U-238 STL Alpha Spec. Correction:	7.15	pCi/g
U-238 STL Alpha Spec. Correction at the 2-Sigma UCL :	9.85	pCi/g

Total Activity (37.52 to 2,000.87 keV) 14.11 pCi/g

Analyzed by: _____ 3/18/05

Gamma Spec. Analyst

Reviewed by: _____

Supervisor (or Peer Review for WS Samples)

Detector: 1 DSPE-601

Date Analyzed: 18-Mar-2005 at 9:59:09AM

Printed: 18-Mar-2005 at 10:10:25AM

Chain of Custody Record

STL-4124 (0901)

SEVERN TRENT STL

Severn Trent Laboratories, Inc.

Carbon Unit

Client	GTEOSI / URS
Project Manager	C. Scholl
Date	2-22-05
Chain of Custody Number	177042
Address	1701 Golf Rd., Suite 1000
Telephone Number (Area Code)/Fax Number	847-228-0707 / 847-228-1115
Lab Number	
Page	1 of 1
City	Rolling Meadows
State	IL
Zip Code	60008
Site Contact	Lester G.
Lab Contact	Kay Clay
Project Name and Location (State)	GTE OSI Hicksville, N.Y.
Carrier/Waybill Number	8490 0896 2599
Contract/Purchase Order/Quote No.	GTE HQE 03060

Sample I.D. No. and Description (Containers for each sample may be combined on one line)	Date	Time	Matrix: Air	Aqueous	Sed	Soil	Carbon	Containers & Preservatives: Unpres	H2SO4	HNO3	HCl	NaOH	ZnAc/NaOH	Jars	Total VOC	TCLP Metals	TCLP Pesticides	TCLP Herbicides	TCLP SVOC	Ignitibility	Reactive Cyanide	Reactive Sulfur	pH	TCLP VOC	% Moisture	Special Instructions/ Conditions of Receipt (PPM)
Carbon Test	2-22-05	1320					X	X						1		X	X	X	X							0.0
Carbon Test	↓	1320					X	X						1						X	X	X	X		X	0.0
Carbon Test	↓	1320					X	X						1										X		0.0
TB-2/22/05	↓			X							X			1	X											
TB-2/22/05	↓			X							X			1	X											

Possible Hazard Identification: ☐ Non-Hazard ☐ Flammable ☐ Skin Irritant ☐ Poison B ☐ Unknown

Sample Disposal: ☐ Return To Client ☐ Disposal By Lab ☐ Archive For ____ Months (A fee may be assessed if samples are retained longer than 1 month)

Turn Around Time Required: ☐ 24 Hours ☐ 48 Hours ☐ 7 Days ☐ 14 Days ☐ 21 Days ☒ Other Standard Business 10 Days

QC Requirements (Specify)

1. Relinquished By	Date	Time	1. Received By	Date	Time
Bob Fabian	2-22-05	1830	FEDEX	2-22-05	1830
2. Relinquished By	Date	Time	2. Received By	Date	Time
3. Relinquished By	Date	Time	3. Received By	Date	Time

Comments

NYSDEC: V-00089-1; URS: 27010-039

DISTRIBUTION: WHITE - Returned to Client with Report; CANARY - Stays with the Sample; PINK - Field Copy

Russell Reid

Septic
Tank
Pumping

Certified
Septic
Inspections

Custom
Maintenance
Programs

Septic System
Engineering

Grease Traps
Drain Lines
Odor Problems

Biological
Treatment
Programs

Non Hazardous
Wastewater
Disposal

Car Wash
Waste
Removal

Storm Sewers
Catch Basins
Pump Stations

Roll-Off
Container
Service

7 Locations
Serving
NJ, NY
PA & DE

February 22, 2005

GTEOSI
Mr. Lester Gryskiewicz
140 Cantiague Rock Road
Hicksville, NY 11801

Dear Lester,

Thank you again for choosing Russell Reid for wastewater services. Attached please find a copy of our permission letter from Nassau County Department of Public Works allowing the disposal of the industrial wastewater stream from the Baker tank from your site at the county run Bay Park Scavenger Waste disposal facility.

The cost for pumping, transportation and disposal is .23 cents per gallon.

Per our discussion we have scheduled to pickup (2) loads on Wednesday February 23, 2005 for a total of 6,000 gallons.

Thank you again for allowing Russell Reid the opportunity to serve GTEOSI.

Regards,

Michael Hollander
Account Executive
Russell Reid Co.

www.russellreid.com

200 Smith Street
PO Box 130
Keasbey, NJ
08832-0130

800.356.4468
FAX: 732.417.0367

THOMAS R. SUOZZI
COUNTY EXECUTIVE

PETER J. GERBASI, P.E.
COMMISSIONER

COUNTY OF NASSAU
DEPARTMENT OF PUBLIC WORKS
1194 PROSPECT AVENUE
WESTBURY, NEW YORK 11590-2723

February 23, 2005

Mr. Michael Hollander
Russel Reid Waste Haulers
10 Logrande Court
Bohemia, New York 11716

Re: Fromer Sylvania Site
Cantiague Rock Road
Hicksville, New York

Dear Mr. Hollander:

Your request to dispose of approximately 6,000 gallons of decon water from the above referenced site at the "Bay Park Scavenger Waste Disposal Facility" has been reviewed and is approved.

This determination is based on the lab analysis of the wastewater and the non-hazardous nature of the subject wastes. This approval is limited to the liquid phase only.

The wastewater must be pumped and transported by a New York State Department of Environmental Conservation approved and Nassau County permitted company.

Thank you for your concern and cooperation. If you have ay additional questions, please feel free to contact me at (516) 571-7352.

Very truly yours,

Vincent Alonge for
Maurice J. Osman
Chief Chemist

MJO:jld

c: Richard Cotugno, Nassau County Department of Public Works
Matthew Reilly, Bay Park Sewage Treatment Plant

F:\DISPOSAL REQUEST.DOC 2/23/05

Russell Reid
RESPONSIBLE WASTEWATER MANAGEMENT

Main Office:

200 Smith Street
PO Box 130
Keasbey, NJ 08832-0130
Phone: 732-225-2238
Fax: 732-417-0367

Branch Offices:

2157 Route 31
PO Box 341
Glen Gardner, NJ 08826-0341
Phone: 908-537-2104
Fax: 908-537-7367

1770 Hurffville Road
PO Box 5690
Deptford, NJ 08096-5690
Phone: 856-227-6494
Fax: 856-227-5293

10 Logrande Court
Bohemia, NY 11716
Phone: 631-567-3122
Fax: 631-244-2951

Field Offices:

360 W. Commodore Blvd.
Suite A
Jackson, NJ 08527-5401
Phone: 732-928-2137
Fax: 732-928-8891

285 S. Shore Road
PO Box 835
Marmora, NJ 08223-0835
Phone: 609-390-1411
Fax: 609-390-2043

593 Male Road
Wind Gap, PA 18901
Phone: 610-863-1181
Fax: 610-863-6884

800-356-4468
www.russellreid.com

FAX TRANSMITTAL FORM

Date: Feb 23, 2005

Number of pages including cover: 3

TO:

Name: Lester Gryskiewicz
Company: GTEOSI
Fax Number: 516-932-9150

FROM:

Name: Michael Hollander
Phone Number: 516-322-9952

- ☐ Urgent
- ☐ Please Comment
- ☐ As Discussed
- ☒ For Review
- ☐ Please Reply
- ☐ As Requested

MESSAGE:

Lester,

Thank you again for your business.

I have attached a copy of the pricing for the loads today along with permission letter from Nassau County.

Call me anytime if you need anything.

Regards,

Michael Hollander
Russell Reid
Account Executive

Chain of Custody Record

SEVERN TRENT **STL**

Severn Trent Laboratories, Inc.

STL-4124 (0901)

Decon Water (Baker Tank)

Client: GTEOSI/URS	Project Manager: C. Scholl	Date: 2-15-05	Chain of Custody Number: 177037
Address: 1701 Golf Rd., Suite 1000	Telephone Number (Area Code)/Fax Number: 847-228-0707 / 847-228-1115	Lab Number	Page 1 of 1
City: Rolling Meadows; State: IL; Zip Code: 60008	Site Contact: Lester G.	Lab Contact: Kay Clay	
Project Name and Location (State): GTEOSI Hicksville, N.Y.	Carrier/Waybill Number: 8490 0896 2669		
Contract/Purchase Order/Quote No.: GTE HQE 03060			

Sample I.D. No. and Description (Containers for each sample may be combined on one line)	Date	Time	Matrix: Air	Aqueous	Sed.	Soil	Containers & Preservatives: Unpres	H2SO4	HNO3	HCl	NaOH	ZnAc/NaOH	Containers	VOC(8260B)	pH	SVOC's	TAL Metals	Alpha Spec	Gamma Spec	Special Instructions/ Conditions of Receipt
Decon Water (Baker Tank)	2-15-05	1105		X						X			2	X						
Trip Blank	↓	↓		X						X			2	X						
Decon Water (Baker Tank)	↓	↓		X			X						1		X					
↓	↓	↓		X			X						2			X				
				X					X				1				X			
				X					X				1					X		
				X					X				1						X	

Possible Hazard Identification: ☐ Non-Hazard ☐ Flammable ☐ Skin Irritant ☐ Poison B ☐ Unknown

Sample Disposal: ☐ Return To Client ☐ Disposal By Lab ☐ Archive For _____ Months (A fee may be assessed if samples are retained longer than 1 month)

Turn Around Time Required: ☐ 24 Hours ☐ 48 Hours ☐ 7 Days ☐ 14 Days ☐ 21 Days ☒ Other 3 Days

QC Requirements (Specify):

	Date	Time		Date	Time
1. Relinquished By: Bob Fabian	2-15-05	1830	1. Received By: FEDEX	2-15-05	1830
2. Relinquished By			2. Received By		
3. Relinquished By			3. Received By		

Comments: NYSDEC: V-00089-1; URS: 27010-039

DISTRIBUTION: WHITE - Returned to Client with Report; CANARY - Stays with the Sample; PINK - Field Copy

GTEOSI

Date 2-15-05
Cell BLDG 100
~~Tent~~ BAKER TANK
Personnel KYLE STRUMFELS (URS), JOHN MITCHELL (ENVIROCON)

Time	Description (Location, Size, Samp. Type, Samp. #, Depth)
10:50	KS, JM ARRIVE AT BAKER TANK, SET UP TO SAMPLE TANK. WATER LEVEL @ 6' 4" FROM TANK BOTTOM.
11:05	BEGIN SAMPLING TANK USING 3' BAILER, WATER COLLECTED IN BAILERS POURED DIRECTLY INTO SAMPLE CONTAINERS AS FOLLOWS:
	- 2 40mL VIALS (w/HCL) - VOC
	1 AMBER - pH
	2 AMBER LITERS - SVOC
	1 POLY (w/ HNO_3) - TAL METALS
	1 POLY (w/ HNO_3) - ALPHA SPEC.
	1 POLY (w/ HNO_3) - GAMMA SPEC.
1115	COMPLETE SAMPLING TANK. KS, JM EXIT AREA.
1130	SAMPLES PACKED WITH ICE & SHIPPED TO STL VIA FEDEX FOR A 3 DAY TURNAROUND. TWO 40mL VIALS WERE INCLUDED AS TRIP BLANKS.

Signature: [signature]
Initial: [initials]

Date: 2-15-05

GTEOSI

Date 2/23/05 KJ
Cell N/A, South Bay of 100 Building.
Tent N/A
Personnel Kyle Jackson, CRO, John Mitchell

Time	Description (Location, Size, Samp. Type, Samp. #, Depth)
0740	Kyle Jackson arrives at 100 Building South Bay. Waiting for truck that will empty tank in South bay.
0850	CRO REPLACES KJ AT FRAC TANK TO OVERSEE OPS.
0900	CHIP (OPERATOR FOR RUSSELL REID) RUNS HOSE TO FRAC TANK AND BEGINS PUMPING
0915	TRUCK IS FULL W/ 3000 gals - LEAVES SITE TO BE EMPTY TRUCK WILL BE BACK IN 1 HOUR.
1020	Kyle Jackson relieves Christopher Artolano. Waiting for vacuum truck to return.
1120	Vacuum truck returns.
1200	Chip, Russel Reid personnel, offsite. Chip informs Kyle Jackson that his truck is used for non-hazardous industrial pumping.
	Final depth of tank is 2'. End of operations at tank in Bldg 100 South Bay.
	Information from side of truck:
	Russell Reid
	01-30
	Roosbey, New Jersey
	NJDEP 7911
	NYSDEC NJ146
	3,000 Gallon (Volume of tank on truck)
	N.C.D.P.W. Permit No 8
	RGVW 48,000
	US DOT 525743
	NEW Jersey License Plate # AB-941D (Commercial)
	- Two 3,000 gallon loads extracted from tank on 2/23/05
	- Total of 6,000 gallons extracted from tank on 2/23/05
	- Final tank depth is 2'

Signature: Kyle R. Jackson
Initial: KRJ

Date: 2/23/05

Russell Reid. mr.john.

RUSSELL REID / MR. JOHN
Corporate Headquarters:
PO Box 130
Keasbey, NJ 08832-0130
www.russellreid.com
www.mrjohn.com

YOUR SERVICE AREA IS: LI

SERVICE TECHNICIAN	CA
DELIVERY DATE	2-23-05
TRUCK #	
ROUTE #	RVST L03

JOB LOCATION 017013 - 001
GTE
140 Cantiague Rock Rd
Hicksville, NY 11801
TEL: (972) 718-4806

BILL TO 017013
GTE Operation Support Inc
Head Quarters E03e75
600 Hidden Ridge Drive
Irving, TX 75038
Jean Agostinelli
TEL: (972) 718-4806

ORDER DESCRIPTION RR Pump (On-Call)

TERMS: Net 10 Days

START TIME: 12:00 am
END TIME: 12:00 am

TIME IN: 8:30
TIME OUT:

ORDER DATE	DATE WANTED	PURCHASE ORDER/JOB ORDER #	ORDERED BY	ORDER #
	02/23/05			0000047158

ASSIGNED DISPOSAL SITE	MANIFEST NUMBER	

SCH. QTY	UNIT TYPE	DESCRIPTION
1	RI PUMP	RR Industrial Services - Pump

CHARGE	TYPE	
3,000	RI LCGT CH	Industrial Leachate Gallons (Taxable)

PAYMENT METHOD: CASH CHECK #
CC # CC EXP DT

SERVICE NOTES:
Check in at gate prior to entering site.
Pumping 6,000 gallons
ACCESS:

DETAILED NOTES:
PULL (1 or 2) 3K Loads from 10K Adler frac tank-- LOADS TO BAY PARK
CONTACT: LESTER GRYSZKIEWICZ 516-932-9157
CROSS STREET: WEST JOHN STREET

1) Load In 8:30 Load out 9:15, 3000 gallons
Dump In 10:00 Dump out 10:30

2) Load In 11:30 Load out 11:55, 3000 gallons
Dump In ____ Dump out ____

VISA MasterCard DISCOVER NOVUS

SEVERN TRENT STL

STL St. Louis
13715 Rider Trail North
Earth City, MO 63045

Tel: 314 298 8566 Fax: 314 298 8757
www.stl-inc.com

ANALYTICAL REPORT

GTE Hicksville HQE03060

Lot #: F5B160118

Carol Scholl

URS
1701 Golf Road
Suite 1000
Rolling Meadows, IL 60008

SEVERN TRENT LABORATORIES, INC.

Kay Clay
Project Manager

February 22, 2005

SEVERN TRENT STL

STL St. Louis
13715 Rider Trail North
Earth City, MO 63045

Tel: 314 298 8566 Fax: 314 298 8757
www.stl-inc.com

ANALYTICAL REPORT

GTE Hicksville HQE03060

Lot #: F5B160118

Gina Filippone

URS
849 International Drive
Suite 320
Linthicum, MD 21090

SEVERN TRENT LABORATORIES, INC.

Kay Clay
Project Manager

February 22, 2005

Case Narrative
LOT NUMBER: F5B160118

This report contains the analytical results for the two samples received under chain of custody by STL St. Louis on February 16, 2005. These samples are associated with your GTE Hicksville HQE03060 project.

The analytical results included in this report meet all applicable quality control procedure requirements except as noted on the following page.

The test results in this report meet all NELAP requirements for parameters in which accreditations are held by STL St. Louis. Any exceptions to NELAP requirements are noted in the case narrative. The case narrative is an integral part of this report.

All chemical analysis results are based upon sample as received, wet weight, unless noted otherwise. All radiochemistry results are based upon sample as dried and ground with the exception of tritium, unless requested wet weight by the client.

Observations/Nonconformances

Reference the chain of custody and condition upon receipt report for any variations on receipt conditions and temperature of samples on receipt.

Method:
GA-01-R MOD

Affected Samples:
F5B160118 (1): DECON WATER

Case Narrative:
Ra-226 is reported in these samples at the client's request. Ra-226 is reported from the 609.31 keV line of Bi-214. Because the samples have not had a 21 day ingrowth the activity for Ra-226 is an estimated value and may be biased low. This bias is caused by the disruption of secular equilibrium between Ra-226 and Bi-214 by the loss of Rn-222 during sample preparation.

Method:
3004/RP-725 MOD

Affected Sample:
F5B160118 (1): DECON WATER

Case Narrative:
The Thorium 228 LCS analyte is outside the upper QC limit, indicating a potential positive bias for that analyte. This analyte was not observed above the reporting limit in the associated samples; therefore the sample data was not adversely affected by this excursion. The original sample results are provided.

Method:
8260B

Affected Samples:
F5B160118 (1): DECON WATER
F5B160118 (2): TRIP BLANK

Case Narrative:
The LCS recoveries are outside QC limits for less than 10% of the compounds spiked. Laboratory QC practices, based on federal guidance documents, allow for up to 10% of the spike compounds to be outside QC criteria without necessitating re-preparation/re-analysis. Sample purge efficiency and compliance is demonstrated by the remaining acceptable LCS recoveries. No further action is required.

The MS/MSD recoveries for 2-Butanone, Tetrachloroethene, and Styrene are outside the established QC limits. The RPD is within method acceptance criteria indicating a possible matrix interference. Method performance is demonstrated by acceptable LCS recovery. No further action is required.

The MS/MSD recovery for Carbon Tetrachloride is outside the established QC limits. The said analyte concentration in the original sample is greater than 4 times the amount spike, making % recovery information statistically invalid. Method performance is demonstrated by acceptable LCS recovery. No further action is required.

Method:
8270C

Affected Sample:
F5B160118 (1): DECON WATER

Case Narrative:
The LCS was partially lost in the extraction process. All recoveries of the LCS are below QC limits. However, the MS/MSD is within QC limits. The data will be reported with this narrative.

METHODS SUMMARY

F5B160118

PARAMETER	ANALYTICAL METHOD	PREPARATION METHOD
pH Aqueous	SW846 9040	SW846 9040
Gamma Spectroscopy - Cesium-137 & Hits	EML GA-01-R MOD	
Isotopic Th by Alpha Spec Alpha Spectroscopy	NAS/DOE 3004/RP	
Isotopic U by Alpha Spec Alpha Spectroscopy	NAS/DOE 3050/RP	
Semivolatile Organic Compounds by GC/MS	SW846 8270C	SW846 3510C
Trace Inductively Coupled Plasma (ICP) Metals	SW846 6010B	SW846 3010A
Volatile Organics by GC/MS	SW846 8260B	SW846 5030B/826

References:

EML "ENVIRONMENTAL MEASUREMENTS LABORATORY PROCEDURES MANUAL" HASL-300 28TH EDITION, VOLUME I and II DEPARTMENT OF ENERGY

NAS/DOE NATIONAL ACADEMY OF SCIENCES. "DOE METHODS FOR EVALUATING ENVIRONMENTL AND WASTE MANGEMENT SAMPLE" OCTOBER 1994 US DEPARTMENT OF ENERGY.

SW846 "Test Methods for Evaluating Solid Waste, Physical/Chemical Methods", Third Edition, November 1986 and its updates.

SAMPLE SUMMARY

F5B160118

WO #	SAMPLE#	CLIENT SAMPLE ID	SAMPLED DATE	SAMP TIME
G4HLF	001	DECON WATER	02/15/05	11:05
G4HM1	002	TRIP BLANK	02/15/05	11:05

NOTE(S):

- The analytical results of the samples listed above are presented on the following pages.
- All calculations are performed before rounding to avoid round-off errors in calculated results.
- Results noted as "ND" were not detected at or above the stated limit.
- This report must not be reproduced, except in full, without the written approval of the laboratory.
- Results for the following parameters are never reported on a dry weight basis: color, corrosivity, density, flashpoint, ignitability, layers, odor, paint filter test, pH, porosity pressure, reactivity, redox potential, specific gravity, spot tests, solids, solubility, temperature, viscosity, and weight.

GTE OPERATIONS SUPPORT INCORPORATED

Client Sample ID: DECON WATER

GC/MS Volatiles

Lot-Sample #...: F5B160118-001 **Work Order #...:** G4HLF1AA **Matrix.....:** WATER
Date Sampled...: 02/15/05 11:05 **Date Received..:** 02/16/05
Prep Date.....: 02/17/05 **Analysis Date..:** 02/18/05
Prep Batch #...: 5049095 **Analysis Time..:** 03:40
Dilution Factor: 1
Method.....: SW846 8260B

PARAMETER	RESULT	REPORTING LIMIT	UNITS	MDL
Acetone	ND	2.0	ug/L	0.21
Benzene	ND	1.0	ug/L	0.050
Bromodichloromethane	ND	1.0	ug/L	0.080
Bromoform	ND	1.0	ug/L	0.17
Bromomethane	ND	2.0	ug/L	0.23
2-Butanone	ND	5.0	ug/L	0.33
Carbon disulfide	ND	1.0	ug/L	0.25
Carbon tetrachloride	**0.32 J**	**1.0**	**ug/L**	**0.090**
Chlorobenzene	ND	1.0	ug/L	0.050
Dibromochloromethane	ND	1.0	ug/L	0.090
Chloroethane	ND	2.0	ug/L	0.11
Chloroform	ND	1.0	ug/L	0.070
Chloromethane	**0.23 J**	**2.0**	**ug/L**	**0.19**
1,1-Dichloroethane	ND	1.0	ug/L	0.070
1,2-Dichloroethane	ND	1.0	ug/L	0.090
cis-1,2-Dichloroethene	ND	1.0	ug/L	0.27
trans-1,2-Dichloroethene	ND	1.0	ug/L	0.080
1,1-Dichloroethene	ND	1.0	ug/L	0.040
1,2-Dichloropropane	ND	1.0	ug/L	0.10
cis-1,3-Dichloropropene	ND	1.0	ug/L	0.13
trans-1,3-Dichloropropene	ND	1.0	ug/L	0.070
Ethylbenzene	ND	1.0	ug/L	0.070
2-Hexanone	ND	5.0	ug/L	0.20
Methylene chloride	ND	1.0	ug/L	0.12
4-Methyl-2-pentanone (MIBK)	ND	5.0	ug/L	0.10
Styrene	ND	1.0	ug/L	0.13
1,1,2,2-Tetrachloroethane	ND	1.0	ug/L	0.080
Tetrachloroethene	**17**	**1.0**	**ug/L**	**0.10**
Toluene	ND	1.0	ug/L	0.080
1,1,1-Trichloroethane	ND	1.0	ug/L	0.080
1,1,2-Trichloroethane	ND	1.0	ug/L	0.070
Trichloroethene	**0.32 J**	**1.0**	**ug/L**	**0.13**
Vinyl chloride	ND	1.0	ug/L	0.070
Xylenes (total)	ND	1.0	ug/L	0.13
1,2-Dichlorobenzene	ND	1.0	ug/L	0.090
1,3-Dichlorobenzene	ND	1.0	ug/L	0.040
1,4-Dichlorobenzene	ND	1.0	ug/L	0.090

(Continued on next page)

GTE OPERATIONS SUPPORT INCORPORATED

Client Sample ID: DECON WATER

GC/MS Volatiles

Lot-Sample #...: F5B160118-001 **Work Order #...:** G4HLF1AA **Matrix.....:** WATER

SURROGATE	PERCENT RECOVERY	RECOVERY LIMITS
Toluene-d8	106	(85 - 117)
Dibromofluoromethane	105	(72 - 136)
1,2-Dichloroethane-d4	112	(78 - 125)
4-Bromofluorobenzene	102	(79 - 120)

NOTE(S):

J Estimated result. Result is less than RL.

GTE OPERATIONS SUPPORT INCORPORATED

DECON WATER

GC/MS Volatiles

Lot-Sample #: F5B160118-001 **Work Order #:** G4HLF1AA **Matrix:** WATER

MASS SPECTROMETER/DATA SYSTEM (MSDS) TENTATIVELY IDENTIFIED COMPOUNDS

PARAMETER	CAS #	ESTIMATED RESULT	RETENTION TIME	UNITS
None				ug/L

GTE OPERATIONS SUPPORT INCORPORATED

Client Sample ID: DECON WATER

GC/MS Semivolatiles

Lot-Sample #...: F5B160118-001 **Work Order #...:** G4HLF1AC **Matrix.....:** WATER
Date Sampled...: 02/15/05 11:05 **Date Received..:** 02/16/05
Prep Date.....: 02/18/05 **Analysis Date..:** 02/21/05
Prep Batch #...: 5049452 **Analysis Time..:** 13:48
Dilution Factor: 1

Method.....: SW846 8270C

PARAMETER	RESULT	REPORTING LIMIT	UNITS	MDL
Phenol	ND	10	ug/L	0.52
bis(2-Chloroethyl)-ether	ND	10	ug/L	1.1
2-Chlorophenol	ND	10	ug/L	0.92
1,3-Dichlorobenzene	ND	10	ug/L	1.9
1,4-Dichlorobenzene	ND	10	ug/L	0.92
1,2-Dichlorobenzene	ND	10	ug/L	1.9
2-Methylphenol	ND	10	ug/L	0.93
2,2'-oxybis(1-Chloropropane)	ND	10	ug/L	1.1
4-Methylphenol	ND	20	ug/L	1.5
N-Nitrosodi-n-propyl-amine	ND	10	ug/L	2.4
Hexachloroethane	ND	10	ug/L	0.80
Nitrobenzene	ND	10	ug/L	0.86
Isophorone	ND	10	ug/L	1.1
2-Nitrophenol	ND	10	ug/L	1.9
2,4-Dimethylphenol	ND	10	ug/L	1.0
bis(2-Chloroethoxy) methane	ND	10	ug/L	1.2
2,4-Dichlorophenol	ND	10	ug/L	0.91
1,2,4-Trichloro-benzene	ND	10	ug/L	0.91
Naphthalene	ND	10	ug/L	1.1
4-Chloroaniline	ND	10	ug/L	1.3
Hexachlorobutadiene	ND	10	ug/L	0.91
4-Chloro-3-methylphenol	ND	10	ug/L	0.87
2-Methylnaphthalene	ND	10	ug/L	1.1
Hexachlorocyclopenta-diene	ND	50	ug/L	2.5
2,4,6-Trichloro-phenol	ND	10	ug/L	2.4
2,4,5-Trichloro-phenol	ND	10	ug/L	2.4
2-Chloronaphthalene	ND	10	ug/L	1.0
2-Nitroaniline	ND	50	ug/L	0.71
Dimethyl phthalate	ND	10	ug/L	2.1
Acenaphthylene	ND	10	ug/L	0.99
2,6-Dinitrotoluene	ND	10	ug/L	3.0

(Continued on next page)

GTE OPERATIONS SUPPORT INCORPORATED

Client Sample ID: DECON WATER

GC/MS Semivolatiles

Lot-Sample #...: F5B160118-001 Work Order #...: G4HLF1AC Matrix.....: WATER

PARAMETER	RESULT	REPORTING LIMIT	UNITS	MDL
3-Nitroaniline	ND	50	ug/L	0.85
Acenaphthene	ND	10	ug/L	1.1
2,4-Dinitrophenol	ND	50	ug/L	6.7
4-Nitrophenol	ND	50	ug/L	3.2
Dibenzofuran	ND	10	ug/L	1.2
2,4-Dinitrotoluene	ND	10	ug/L	4.0
Diethyl phthalate	ND	10	ug/L	3.6
Fluorene	ND	10	ug/L	1.2
4-Chlorophenyl phenyl ether	ND	10	ug/L	1.1
4-Nitroaniline	ND	50	ug/L	0.84
4,6-Dinitro-2-methylphenol	ND	50	ug/L	4.0
N-Nitrosodiphenylamine	ND	10	ug/L	1.2
4-Bromophenyl phenyl ether	ND	10	ug/L	1.0
Hexachlorobenzene	ND	10	ug/L	1.2
Pentachlorophenol	ND	50	ug/L	3.8
Phenanthrene	ND	10	ug/L	1.4
Anthracene	ND	10	ug/L	1.2
Carbazole	ND	10	ug/L	1.5
Di-n-butyl phthalate	ND	10	ug/L	1.7
Fluoranthene	ND	10	ug/L	1.5
Pyrene	ND	10	ug/L	1.7
Butyl benzyl phthalate	ND	10	ug/L	1.8
Benzo(a)anthracene	ND	10	ug/L	1.7
3,3'-Dichlorobenzidine	ND	50	ug/L	2.6
Chrysene	ND	10	ug/L	2.0
bis(2-Ethylhexyl) phthalate	ND	10	ug/L	3.6
Di-n-octyl phthalate	ND	10	ug/L	2.2
Benzo(b)fluoranthene	ND	10	ug/L	4.3
Benzo(k)fluoranthene	ND	10	ug/L	4.8
Benzo(a)pyrene	ND	10	ug/L	4.0
Indeno(1,2,3-cd)pyrene	ND	10	ug/L	2.6
Benzo(ghi)perylene	ND	10	ug/L	3.1
Dibenzo(a,h)anthracene	ND	10	ug/L	2.7

SURROGATE	PERCENT RECOVERY	RECOVERY LIMITS
2-Fluorophenol	30	(10 - 115)
Phenol-d5	21	(10 - 115)
Nitrobenzene-d5	59	(22 - 115)
2-Fluorobiphenyl	56	(18 - 115)
2,4,6-Tribromophenol	75	(10 - 118)
Terphenyl-d14	59	(10 - 115)

GTE OPERATIONS SUPPORT INCORPORATED

DECON WATER

GC/MS Semivolatiles

Lot-Sample #: F5B160118-001 **Work Order #:** G4HLF1AC **Matrix:** WATER

MASS SPECTROMETER/DATA SYSTEM (MSDS) TENTATIVELY IDENTIFIED COMPOUNDS

PARAMETER	CAS #	ESTIMATED RESULT		RETENTION TIME	UNITS
Tetrachloroethylene	127-18-4	5.9	M	3.418	ug/L
Unknown		13	M	16.45	ug/L
Unknown		8.7	M	16.68	ug/L
Unknown		8.7	M	16.787	ug/L

NOTE(S):

M: Result was measured against nearest internal standard assuming a response factor of 1.

GTE OPERATIONS SUPPORT INCORPORATED

Client Sample ID: DECON WATER

TOTAL Metals

Lot-Sample #...: F5B160118-001 Matrix.....: WATER
Date Sampled...: 02/15/05 11:05 Date Received..: 02/16/05

PARAMETER	RESULT	REPORTING LIMIT	UNITS	METHOD	PREPARATION-ANALYSIS DATE	WORK ORDER #
Prep Batch #...: 5047307						
Silver	ND	10	ug/L	SW846 6010B	02/16-02/17/05	G4HLF1AH
		Dilution Factor: 1		Analysis Time..: 12:10	MDL.....: 2.167	
Aluminum	1920	200	ug/L	SW846 6010B	02/16-02/17/05	G4HLF1AJ
		Dilution Factor: 1		Analysis Time..: 12:10	MDL.....: 16.6	
Barium	28.1 B	200	ug/L	SW846 6010B	02/16-02/17/05	G4HLF1AK
		Dilution Factor: 1		Analysis Time..: 12:10	MDL.....: 0.7536	
Beryllium	ND	5	ug/L	SW846 6010B	02/16-02/17/05	G4HLF1AL
		Dilution Factor: 1		Analysis Time..: 12:10	MDL.....: 0.6594	
Calcium	14000	5000	ug/L	SW846 6010B	02/16-02/17/05	G4HLF1AM
		Dilution Factor: 1		Analysis Time..: 12:10	MDL.....: 20	
Cadmium	ND	5	ug/L	SW846 6010B	02/16-02/17/05	G4HLF1AN
		Dilution Factor: 1		Analysis Time..: 12:10	MDL.....: 0.471	
Cobalt	7.0 B	50	ug/L	SW846 6010B	02/16-02/17/05	G4HLF1AP
		Dilution Factor: 1		Analysis Time..: 12:10	MDL.....: 6.594	
Chromium	ND	10	ug/L	SW846 6010B	02/16-02/17/05	G4HLF1AQ
		Dilution Factor: 1		Analysis Time..: 12:10	MDL.....: 7.379	
Copper	21.3 B	25	ug/L	SW846 6010B	02/16-02/17/05	G4HLF1AR
		Dilution Factor: 1		Analysis Time..: 12:10	MDL.....: 4.27	
Iron	2370	100	ug/L	SW846 6010B	02/16-02/17/05	G4HLF1AT
		Dilution Factor: 1		Analysis Time..: 12:37	MDL.....: 11.995	
Potassium	4810 B	5000	ug/L	SW846 6010B	02/16-02/17/05	G4HLF1AU
		Dilution Factor: 1		Analysis Time..: 12:37	MDL.....: 1492	
Magnesium	1850 B	5000	ug/L	SW846 6010B	02/16-02/17/05	G4HLF1AV
		Dilution Factor: 1		Analysis Time..: 12:10	MDL.....: 136.998	
Manganese	415	15	ug/L	SW846 6010B	02/16-02/17/05	G4HLF1AW
		Dilution Factor: 1		Analysis Time..: 12:10	MDL.....: 2	

(Continued on next page)

GTE OPERATIONS SUPPORT INCORPORATED

Client Sample ID: DECON WATER

TOTAL Metals

Lot-Sample #...: F5B160118-001 **Matrix.....:** WATER

PARAMETER	RESULT	REPORTING LIMIT	UNITS	METHOD	PREPARATION-ANALYSIS DATE	WORK ORDER #
Sodium	**30200**	**5000**	**ug/L**	**SW846 6010B**	**02/16-02/17/05**	**G4HLF1AX**
		Dilution Factor: 1		Analysis Time..: 12:37	MDL.....: 66.4	
Nickel	**24.3 B**	**40**	**ug/L**	**SW846 6010B**	**02/16-02/17/05**	**G4HLF1A0**
		Dilution Factor: 1		Analysis Time..: 12:10	MDL.....: 18.9	
Antimony	ND	60	ug/L	SW846 6010B	02/16-02/17/05	G4HLF1A1
		Dilution Factor: 1		Analysis Time..: 12:10	MDL.....: 2.669	
Vanadium	ND	50	ug/L	SW846 6010B	02/16-02/17/05	G4HLF1A2
		Dilution Factor: 1		Analysis Time..: 12:10	MDL.....: 7.63	
Zinc	**61.4**	**20**	**ug/L**	**SW846 6010B**	**02/16-02/17/05**	**G4HLF1A3**
		Dilution Factor: 1		Analysis Time..: 12:10	MDL.....: 2.29	
Arsenic	ND	10	ug/L	SW846 6010B	02/16-02/17/05	G4HLF1AD
		Dilution Factor: 1		Analysis Time..: 12:10	MDL.....: 2	
Arsenic	ND	10	ug/L	SW846 6010B	02/16-02/17/05	G4HLF1A4
		Dilution Factor: 1		Analysis Time..: 12:10	MDL.....: 2	
Lead	ND	5	ug/L	SW846 6010B	02/16-02/17/05	G4HLF1AE
		Dilution Factor: 1		Analysis Time..: 12:10	MDL.....: 1.758	
Lead	ND	5	ug/L	SW846 6010B	02/16-02/17/05	G4HLF1A5
		Dilution Factor: 1		Analysis Time..: 12:10	MDL.....: 1.758	
Selenium	ND	5	ug/L	SW846 6010B	02/16-02/17/05	G4HLF1AF
		Dilution Factor: 1		Analysis Time..: 12:10	MDL.....: 3.077	
Selenium	ND	5	ug/L	SW846 6010B	02/16-02/17/05	G4HLF1A6
		Dilution Factor: 1		Analysis Time..: 12:10	MDL.....: 3.077	
Thallium	ND	10	ug/L	SW846 6010B	02/16-02/17/05	G4HLF1AG
		Dilution Factor: 1		Analysis Time..: 12:10	MDL.....: 3.925	
Thallium	ND	10	ug/L	SW846 6010B	02/16-02/17/05	G4HLF1A7
		Dilution Factor: 1		Analysis Time..: 12:10	MDL.....: 3.925	

NOTE(S):

B Estimated result. Result is less than RL.

GTE OPERATIONS SUPPORT INCORPORATED

Client Sample ID: DECON WATER

General Chemistry

Lot-Sample #...: F5B160118-001 Work Order #...: G4HLF Matrix.....: WATER
Date Sampled...: 02/15/05 11:05 Date Received..: 02/16/05

PARAMETER	RESULT	RL	UNITS	METHOD	PREPARATION-ANALYSIS DATE	PREP BATCH #
pH (liquid)	7.1		No Units	SW846 9040	02/16/05	5047309

Dilution Factor: 1 Analysis Time..: 00:00 MDL.....:

GTE OPERATIONS SUPPORT INCORPORATED

Client Sample ID: TRIP BLANK

GC/MS Volatiles

Lot-Sample #...: F5B160118-002 **Work Order #...:** G4HM11AA **Matrix.....:** WATER
Date Sampled...: 02/15/05 11:05 **Date Received..:** 02/16/05
Prep Date.....: 02/17/05 **Analysis Date..:** 02/18/05
Prep Batch #...: 5049095 **Analysis Time..:** 04:03
Dilution Factor: 1
Method.....: SW846 8260B

PARAMETER	RESULT	REPORTING LIMIT	UNITS	MDL
Acetone	**1.2 J**	**2.0**	**ug/L**	**0.21**
Benzene	ND	1.0	ug/L	0.050
Bromodichloromethane	ND	1.0	ug/L	0.080
Bromoform	ND	1.0	ug/L	0.17
Bromomethane	ND	2.0	ug/L	0.23
2-Butanone	ND	5.0	ug/L	0.33
Carbon disulfide	ND	1.0	ug/L	0.25
Carbon tetrachloride	**0.28 J**	**1.0**	**ug/L**	**0.090**
Chlorobenzene	ND	1.0	ug/L	0.050
Dibromochloromethane	ND	1.0	ug/L	0.090
Chloroethane	ND	2.0	ug/L	0.11
Chloroform	**0.41 J**	**1.0**	**ug/L**	**0.070**
Chloromethane	**0.24 J**	**2.0**	**ug/L**	**0.19**
1,1-Dichloroethane	ND	1.0	ug/L	0.070
1,2-Dichloroethane	ND	1.0	ug/L	0.090
cis-1,2-Dichloroethene	ND	1.0	ug/L	0.27
trans-1,2-Dichloroethene	ND	1.0	ug/L	0.080
1,1-Dichloroethene	ND	1.0	ug/L	0.040
1,2-Dichloropropane	ND	1.0	ug/L	0.10
cis-1,3-Dichloropropene	ND	1.0	ug/L	0.13
trans-1,3-Dichloropropene	ND	1.0	ug/L	0.070
Ethylbenzene	ND	1.0	ug/L	0.070
2-Hexanone	ND	5.0	ug/L	0.20
Methylene chloride	**0.49 J,B**	**1.0**	**ug/L**	**0.12**
4-Methyl-2-pentanone (MIBK)	ND	5.0	ug/L	0.10
Styrene	ND	1.0	ug/L	0.13
1,1,2,2-Tetrachloroethane	ND	1.0	ug/L	0.080
Tetrachloroethene	ND	1.0	ug/L	0.10
Toluene	ND	1.0	ug/L	0.080
1,1,1-Trichloroethane	ND	1.0	ug/L	0.080
1,1,2-Trichloroethane	ND	1.0	ug/L	0.070
Trichloroethene	ND	1.0	ug/L	0.13
Vinyl chloride	ND	1.0	ug/L	0.070
Xylenes (total)	ND	1.0	ug/L	0.13
1,2-Dichlorobenzene	ND	1.0	ug/L	0.090
1,3-Dichlorobenzene	ND	1.0	ug/L	0.040
1,4-Dichlorobenzene	ND	1.0	ug/L	0.090

(Continued on next page)

GTE OPERATIONS SUPPORT INCORPORATED

Client Sample ID: TRIP BLANK

GC/MS Volatiles

Lot-Sample #...: F5B160118-002 Work Order #...: G4HM11AA Matrix.....: WATER

SURROGATE	PERCENT RECOVERY	RECOVERY LIMITS
Toluene-d8	106	(85 - 117)
Dibromofluoromethane	118	(72 - 136)
1,2-Dichloroethane-d4	118	(78 - 125)
4-Bromofluorobenzene	104	(79 - 120)

NOTE(S):

J Estimated result. Result is less than RL.

B Method blank contamination. The associated method blank contains the target analyte at a reportable level.

GTE OPERATIONS SUPPORT INCORPORATED

TRIP BLANK

GC/MS Volatiles

Lot-Sample #: F5B160118-002 **Work Order #:** G4HM11AA **Matrix:** WATER

MASS SPECTROMETER/DATA SYSTEM (MSDS) TENTATIVELY IDENTIFIED COMPOUNDS

PARAMETER	CAS #	ESTIMATED RESULT	RETENTION TIME	UNITS
None				ug/L

METHOD BLANK REPORT

GC/MS Volatiles

Client Lot #...: F5B160118 **Work Order #...:** G4NPN1AA **Matrix.....:** WATER
MB Lot-Sample #: F5B180000-095

Prep Date.....: 02/17/05 **Analysis Time..:** 21:47
Analysis Date..: 02/17/05 **Prep Batch #...:** 5049095
Dilution Factor: 1

PARAMETER	RESULT	REPORTING LIMIT	UNITS	METHOD
Tetrachloroethene	ND	1.0	ug/L	SW846 8260B
Trichloroethene	ND	1.0	ug/L	SW846 8260B
Vinyl chloride	ND	1.0	ug/L	SW846 8260B
Acetone	ND	2.0	ug/L	SW846 8260B
Benzene	ND	1.0	ug/L	SW846 8260B
Bromodichloromethane	ND	1.0	ug/L	SW846 8260B
Bromoform	ND	1.0	ug/L	SW846 8260B
Bromomethane	ND	2.0	ug/L	SW846 8260B
2-Butanone	ND	5.0	ug/L	SW846 8260B
Carbon disulfide	ND	1.0	ug/L	SW846 8260B
Carbon tetrachloride	ND	1.0	ug/L	SW846 8260B
Chlorobenzene	ND	1.0	ug/L	SW846 8260B
Dibromochloromethane	ND	1.0	ug/L	SW846 8260B
Chloroethane	ND	2.0	ug/L	SW846 8260B
Chloroform	ND	1.0	ug/L	SW846 8260B
Chloromethane	ND	2.0	ug/L	SW846 8260B
1,2-Dichlorobenzene	ND	1.0	ug/L	SW846 8260B
1,3-Dichlorobenzene	ND	1.0	ug/L	SW846 8260B
1,4-Dichlorobenzene	ND	1.0	ug/L	SW846 8260B
1,1-Dichloroethane	ND	1.0	ug/L	SW846 8260B
1,2-Dichloroethane	ND	1.0	ug/L	SW846 8260B
1,1-Dichloroethene	ND	1.0	ug/L	SW846 8260B
cis-1,2-Dichloroethene	ND	1.0	ug/L	SW846 8260B
trans-1,2-Dichloroethene	ND	1.0	ug/L	SW846 8260B
1,2-Dichloropropane	ND	1.0	ug/L	SW846 8260B
cis-1,3-Dichloropropene	ND	1.0	ug/L	SW846 8260B
trans-1,3-Dichloropropene	ND	1.0	ug/L	SW846 8260B
Ethylbenzene	ND	1.0	ug/L	SW846 8260B
2-Hexanone	ND	5.0	ug/L	SW846 8260B
Methylene chloride	**0.26 J**	**1.0**	**ug/L**	**SW846 8260B**
Styrene	ND	1.0	ug/L	SW846 8260B
1,1,2,2-Tetrachloroethane	ND	1.0	ug/L	SW846 8260B
Toluene	ND	1.0	ug/L	SW846 8260B
1,1,1-Trichloroethane	ND	1.0	ug/L	SW846 8260B
1,1,2-Trichloroethane	ND	1.0	ug/L	SW846 8260B
Xylenes (total)	ND	1.0	ug/L	SW846 8260B
4-Methyl-2-pentanone (MIBK)	ND	5.0	ug/L	SW846 8260B

(Continued on next page)

METHOD BLANK REPORT

GC/MS Volatiles

Client Lot #...: F5B160118 Work Order #...: G4NPN1AA Matrix.....: WATER

PARAMETER	RESULT	REPORTING LIMIT	UNITS	METHOD

SURROGATE	PERCENT RECOVERY	RECOVERY LIMITS
Toluene-d8	107	(85 - 117)
Dibromofluoromethane	105	(72 - 136)
1,2-Dichloroethane-d4	109	(78 - 125)
4-Bromofluorobenzene	105	(79 - 120)

NOTE(S):

Calculations are performed before rounding to avoid round-off errors in calculated results.

J Estimated result. Result is less than RL.

GTE OPERATIONS SUPPORT INCORPORATED

Method Blank Report

GC/MS Volatiles

Lot-Sample #: F5B180000-095 B **Work Order #:** G4NPN1AA **Matrix:** WATER

MASS SPECTROMETER/DATA SYSTEM (MSDS) TENTATIVELY IDENTIFIED COMPOUNDS

PARAMETER	CAS #	ESTIMATED RESULT	RETENTION TIME	UNITS
None				ug/L

METHOD BLANK REPORT

GC/MS Semivolatiles

Client Lot #...: F5B160118 Work Order #...: G4QQ91AA Matrix.....: WATER
MB Lot-Sample #: F5B180000-452

Prep Date.....: 02/18/05 Analysis Time..: 12:39
Analysis Date..: 02/21/05 Prep Batch #...: 5049452
Dilution Factor: 1

PARAMETER	RESULT	REPORTING LIMIT	UNITS	METHOD
Phenol	ND	10	ug/L	SW846 8270C
bis(2-Chloroethyl)-ether	ND	10	ug/L	SW846 8270C
2-Chlorophenol	ND	10	ug/L	SW846 8270C
1,3-Dichlorobenzene	ND	10	ug/L	SW846 8270C
1,4-Dichlorobenzene	ND	10	ug/L	SW846 8270C
1,2-Dichlorobenzene	ND	10	ug/L	SW846 8270C
2-Methylphenol	ND	10	ug/L	SW846 8270C
2,2'-oxybis(1-Chloropropa	ND	10	ug/L	SW846 8270C
4-Methylphenol	ND	20	ug/L	SW846 8270C
N-Nitrosodi-n-propyl-amine	ND	10	ug/L	SW846 8270C
Hexachloroethane	ND	10	ug/L	SW846 8270C
Nitrobenzene	ND	10	ug/L	SW846 8270C
Isophorone	ND	10	ug/L	SW846 8270C
2-Nitrophenol	ND	10	ug/L	SW846 8270C
2,4-Dimethylphenol	ND	10	ug/L	SW846 8270C
bis(2-Chloroethoxy) methane	ND	10	ug/L	SW846 8270C
2,4-Dichlorophenol	ND	10	ug/L	SW846 8270C
1,2,4-Trichloro-benzene	ND	10	ug/L	SW846 8270C
Naphthalene	ND	10	ug/L	SW846 8270C
4-Chloroaniline	ND	10	ug/L	SW846 8270C
Hexachlorobutadiene	ND	10	ug/L	SW846 8270C
4-Chloro-3-methylphenol	ND	10	ug/L	SW846 8270C
2-Methylnaphthalene	ND	10	ug/L	SW846 8270C
Hexachlorocyclopenta-diene	ND	50	ug/L	SW846 8270C
2,4,6-Trichloro-phenol	ND	10	ug/L	SW846 8270C
2,4,5-Trichloro-phenol	ND	10	ug/L	SW846 8270C
2-Chloronaphthalene	ND	10	ug/L	SW846 8270C
2-Nitroaniline	ND	50	ug/L	SW846 8270C
Dimethyl phthalate	ND	10	ug/L	SW846 8270C
Acenaphthylene	ND	10	ug/L	SW846 8270C
2,6-Dinitrotoluene	ND	10	ug/L	SW846 8270C
3-Nitroaniline	ND	50	ug/L	SW846 8270C
Acenaphthene	ND	10	ug/L	SW846 8270C
2,4-Dinitrophenol	ND	50	ug/L	SW846 8270C

(Continued on next page)

METHOD BLANK REPORT

GC/MS Semivolatiles

Client Lot #...: F5B160118 Work Order #...: G4QQ91AA Matrix.....: WATER

PARAMETER	RESULT	REPORTING LIMIT	UNITS	METHOD
4-Nitrophenol	ND	50	ug/L	SW846 8270C
Dibenzofuran	ND	10	ug/L	SW846 8270C
2,4-Dinitrotoluene	ND	10	ug/L	SW846 8270C
Diethyl phthalate	ND	10	ug/L	SW846 8270C
Fluorene	ND	10	ug/L	SW846 8270C
4-Chlorophenyl phenyl ether	ND	10	ug/L	SW846 8270C
4-Nitroaniline	ND	50	ug/L	SW846 8270C
4,6-Dinitro-2-methylphenol	ND	50	ug/L	SW846 8270C
N-Nitrosodiphenylamine	ND	10	ug/L	SW846 8270C
4-Bromophenyl phenyl ether	ND	10	ug/L	SW846 8270C
Hexachlorobenzene	ND	10	ug/L	SW846 8270C
Pentachlorophenol	ND	50	ug/L	SW846 8270C
Phenanthrene	ND	10	ug/L	SW846 8270C
Anthracene	ND	10	ug/L	SW846 8270C
Carbazole	ND	10	ug/L	SW846 8270C
Di-n-butyl phthalate	ND	10	ug/L	SW846 8270C
Fluoranthene	ND	10	ug/L	SW846 8270C
Pyrene	ND	10	ug/L	SW846 8270C
Butyl benzyl phthalate	ND	10	ug/L	SW846 8270C
Benzo(a)anthracene	ND	10	ug/L	SW846 8270C
3,3'-Dichlorobenzidine	ND	50	ug/L	SW846 8270C
Chrysene	ND	10	ug/L	SW846 8270C
bis(2-Ethylhexyl) phthalate	ND	10	ug/L	SW846 8270C
Di-n-octyl phthalate	ND	10	ug/L	SW846 8270C
Benzo(b)fluoranthene	ND	10	ug/L	SW846 8270C
Benzo(k)fluoranthene	ND	10	ug/L	SW846 8270C
Benzo(a)pyrene	ND	10	ug/L	SW846 8270C
Indeno(1,2,3-cd)pyrene	ND	10	ug/L	SW846 8270C
Benzo(ghi)perylene	ND	10	ug/L	SW846 8270C
Dibenzo(a,h)anthracene	ND	10	ug/L	SW846 8270C

SURROGATE	PERCENT RECOVERY	RECOVERY LIMITS
2-Fluorophenol	37	(10 - 115)
Phenol-d5	26	(10 - 115)
Nitrobenzene-d5	65	(22 - 115)
2-Fluorobiphenyl	62	(18 - 115)
2,4,6-Tribromophenol	69	(10 - 118)
Terphenyl-d14	71	(10 - 115)

NOTE(S):

Calculations are performed before rounding to avoid round-off errors in calculated results.

GTE OPERATIONS SUPPORT INCORPORATED

Method Blank Report

GC/MS Semivolatiles

Lot-Sample #: F5B180000-452 B **Work Order #:** G4QQ91AA **Matrix:** WATER

MASS SPECTROMETER/DATA SYSTEM (MSDS) TENTATIVELY IDENTIFIED COMPOUNDS

PARAMETER	CAS #	ESTIMATED RESULT		RETENTION TIME	UNITS
Triphenylphosphine oxide	791-28-6	4.3	M	18.469	ug/L

NOTE(S):

M: Result was measured against nearest internal standard assuming a response factor of 1.

METHOD BLANK REPORT

TOTAL Metals

Client Lot #...: F5B160118 **Matrix.....:** WATER

PARAMETER	RESULT	REPORTING LIMIT	UNITS	METHOD	PREPARATION-ANALYSIS DATE	WORK ORDER #
MB Lot-Sample #: F5B160000-307 **Prep Batch #...:** 5047307						
Aluminum	ND	200	ug/L	SW846 6010B	02/16-02/17/05	G4JRN1AG
		Dilution Factor: 1				
		Analysis Time..: 12:01				
Antimony	ND	60	ug/L	SW846 6010B	02/16-02/17/05	G4JRN1AX
		Dilution Factor: 1				
		Analysis Time..: 12:01				
Barium	ND	200	ug/L	SW846 6010B	02/16-02/17/05	G4JRN1AH
		Dilution Factor: 1				
		Analysis Time..: 12:01				
Beryllium	ND	5	ug/L	SW846 6010B	02/16-02/17/05	G4JRN1AJ
		Dilution Factor: 1				
		Analysis Time..: 12:01				
Cadmium	ND	5	ug/L	SW846 6010B	02/16-02/17/05	G4JRN1AL
		Dilution Factor: 1				
		Analysis Time..: 12:01				
Calcium	ND	5000	ug/L	SW846 6010B	02/16-02/17/05	G4JRN1AK
		Dilution Factor: 1				
		Analysis Time..: 12:01				
Chromium	ND	10	ug/L	SW846 6010B	02/16-02/17/05	G4JRN1AN
		Dilution Factor: 1				
		Analysis Time..: 12:01				
Cobalt	ND	50	ug/L	SW846 6010B	02/16-02/17/05	G4JRN1AM
		Dilution Factor: 1				
		Analysis Time..: 12:01				
Copper	ND	25	ug/L	SW846 6010B	02/16-02/17/05	G4JRN1AP
		Dilution Factor: 1				
		Analysis Time..: 12:01				
Iron	ND	100	ug/L	SW846 6010B	02/16-02/17/05	G4JRN1AQ
		Dilution Factor: 1				
		Analysis Time..: 12:28				
Magnesium	ND	5000	ug/L	SW846 6010B	02/16-02/17/05	G4JRN1AT
		Dilution Factor: 1				
		Analysis Time..: 12:01				

(Continued on next page)

METHOD BLANK REPORT

TOTAL Metals

Client Lot #...: F5B160118 **Matrix.....:** WATER

PARAMETER	RESULT	REPORTING LIMIT	UNITS	METHOD	PREPARATION-ANALYSIS DATE	WORK ORDER #
Manganese	ND	15	ug/L	SW846 6010B	02/16-02/17/05	G4JRN1AU
		Dilution Factor: 1				
		Analysis Time..: 12:01				
Nickel	ND	40	ug/L	SW846 6010B	02/16-02/17/05	G4JRN1AW
		Dilution Factor: 1				
		Analysis Time..: 12:01				
Potassium	ND	5000	ug/L	SW846 6010B	02/16-02/17/05	G4JRN1AR
		Dilution Factor: 1				
		Analysis Time..: 12:28				
Silver	ND	10	ug/L	SW846 6010B	02/16-02/17/05	G4JRN1AF
		Dilution Factor: 1				
		Analysis Time..: 12:01				
Sodium	ND	5000	ug/L	SW846 6010B	02/16-02/17/05	G4JRN1AV
		Dilution Factor: 1				
		Analysis Time..: 12:28				
Vanadium	ND	50	ug/L	SW846 6010B	02/16-02/17/05	G4JRN1A0
		Dilution Factor: 1				
		Analysis Time..: 12:01				
Zinc	ND	20	ug/L	SW846 6010B	02/16-02/17/05	G4JRN1A1
		Dilution Factor: 1				
		Analysis Time..: 12:01				
Arsenic	ND	10	ug/L	SW846 6010B	02/16-02/17/05	G4JRN1AA
		Dilution Factor: 1				
		Analysis Time..: 12:01				
Lead	ND	5	ug/L	SW846 6010B	02/16-02/17/05	G4JRN1AC
		Dilution Factor: 1				
		Analysis Time..: 12:01				
Selenium	ND	5	ug/L	SW846 6010B	02/16-02/17/05	G4JRN1AD
		Dilution Factor: 1				
		Analysis Time..: 12:01				
Thallium	ND	10	ug/L	SW846 6010B	02/16-02/17/05	G4JRN1AE
		Dilution Factor: 1				
		Analysis Time..: 12:01				

NOTE(S):

Calculations are performed before rounding to avoid round-off errors in calculated results.

LABORATORY CONTROL SAMPLE EVALUATION REPORT

GC/MS Volatiles

Client Lot #...: F5B160118 Work Order #...: G4NPN1AC-LCS Matrix.....: WATER
LCS Lot-Sample#: F5B180000-095 G4NPN1AD-LCSD
Prep Date.....: 02/17/05 Analysis Date..: 02/17/05
Prep Batch #...: 5049095 Analysis Time..: 20:39
Dilution Factor: 1

PARAMETER	PERCENT RECOVERY	RECOVERY LIMITS	RPD	RPD LIMITS	METHOD
cis-1,3-Dichloropropene	109	(77 - 128)			SW846 8260B
	114	(77 - 128)	4.9	(0-20)	SW846 8260B
Dibromochloromethane	103	(78 - 138)			SW846 8260B
	105	(78 - 138)	2.4	(0-20)	SW846 8260B
Chloromethane	87	(10 - 150)			SW846 8260B
	88	(10 - 150)	1.4	(0-20)	SW846 8260B
Vinyl chloride	94	(10 - 150)			SW846 8260B
	95	(10 - 150)	1.5	(0-20)	SW846 8260B
Bromomethane	82	(10 - 150)			SW846 8260B
	89	(10 - 150)	7.7	(0-20)	SW846 8260B
Chloroethane	110	(37 - 136)			SW846 8260B
	110	(37 - 136)	0.090	(0-20)	SW846 8260B
Acetone	67	(25 - 150)			SW846 8260B
	64	(25 - 150)	4.8	(0-20)	SW846 8260B
1,1-Dichloroethene	94	(57 - 128)			SW846 8260B
	92	(57 - 128)	1.7	(0-20)	SW846 8260B
Methylene chloride	94	(54 - 119)			SW846 8260B
	95	(54 - 119)	1.3	(0-20)	SW846 8260B
Carbon disulfide	100	(44 - 150)			SW846 8260B
	100	(44 - 150)	0.54	(0-20)	SW846 8260B
1,1-Dichloroethane	100	(83 - 118)			SW846 8260B
	100	(83 - 118)	0.78	(0-20)	SW846 8260B
2-Butanone	76	(51 - 143)			SW846 8260B
	70	(51 - 143)	8.3	(0-20)	SW846 8260B
Chloroform	94	(81 - 120)			SW846 8260B
	96	(81 - 120)	2.0	(0-20)	SW846 8260B
1,1,1-Trichloroethane	99	(79 - 120)			SW846 8260B
	103	(79 - 120)	4.0	(0-20)	SW846 8260B
Carbon tetrachloride	99	(75 - 126)			SW846 8260B
	100	(75 - 126)	1.5	(0-20)	SW846 8260B
1,2-Dichloroethane	101	(73 - 126)			SW846 8260B
	102	(73 - 126)	1.4	(0-20)	SW846 8260B
Benzene	102	(85 - 114)			SW846 8260B
	103	(85 - 114)	1.5	(0-20)	SW846 8260B
Trichloroethene	93	(77 - 117)			SW846 8260B
	94	(77 - 117)	1.6	(0-20)	SW846 8260B
1,2-Dichloropropane	102	(79 - 128)			SW846 8260B
	106	(79 - 128)	3.5	(0-20)	SW846 8260B
Bromodichloromethane	97	(77 - 126)			SW846 8260B
	102	(77 - 126)	4.5	(0-20)	SW846 8260B

(Continued on next page)

LABORATORY CONTROL SAMPLE EVALUATION REPORT

GC/MS Volatiles

Client Lot #...: F5B160118 Work Order #...: G4NPN1AC-LCS Matrix.....: WATER
LCS Lot-Sample#: F5B180000-095 G4NPN1AD-LCSD

PARAMETER	PERCENT RECOVERY	RECOVERY LIMITS	RPD	RPD LIMITS	METHOD
1,1,2-Trichloroethane	105	(79 - 124)			SW846 8260B
	109	(79 - 124)	3.2	(0-20)	SW846 8260B
trans-1,3-Dichloropropene	118	(85 - 140)			SW846 8260B
	127	(85 - 140)	7.8	(0-20)	SW846 8260B
Toluene	100	(85 - 120)			SW846 8260B
	100	(85 - 120)	0.16	(0-20)	SW846 8260B
1,3-Dichlorobenzene	101	(85 - 116)			SW846 8260B
	103	(85 - 116)	2.1	(0-20)	SW846 8260B
1,4-Dichlorobenzene	98	(85 - 112)			SW846 8260B
	100	(85 - 112)	2.3	(0-20)	SW846 8260B
1,2-Dichlorobenzene	101	(85 - 116)			SW846 8260B
	104	(85 - 116)	2.5	(0-20)	SW846 8260B
2-Hexanone	112	(46 - 145)			SW846 8260B
	118	(46 - 145)	5.1	(0-20)	SW846 8260B
4-Methyl-2-pentanone (MIBK	93	(52 - 144)			SW846 8260B
	95	(52 - 144)	2.4	(0-20)	SW846 8260B
Chlorobenzene	103	(85 - 114)			SW846 8260B
	104	(85 - 114)	0.77	(0-20)	SW846 8260B
Bromoform	96	(63 - 144)			SW846 8260B
	98	(63 - 144)	2.3	(0-20)	SW846 8260B
Ethylbenzene	107	(85 - 116)			SW846 8260B
	107	(85 - 116)	0.28	(0-20)	SW846 8260B
Styrene	106	(85 - 119)			SW846 8260B
	108	(85 - 119)	1.9	(0-20)	SW846 8260B
1,1,2,2-Tetrachloroethane	104	(74 - 135)			SW846 8260B
	105	(74 - 135)	1.0	(0-20)	SW846 8260B
Tetrachloroethene	63 a	(73 - 122)			SW846 8260B
	63 a	(73 - 122)	0.14	(0-20)	SW846 8260B
1,2-Dichloroethene (total)	99	(83 - 121)			SW846 8260B
	104	(83 - 121)	5.5	(0-20)	SW846 8260B
m-Xylene & p-Xylene	105	(85 - 118)			SW846 8260B
	107	(85 - 118)	2.3	(0-20)	SW846 8260B
o-Xylene	103	(85 - 120)			SW846 8260B
	104	(85 - 120)	0.96	(0-20)	SW846 8260B

SURROGATE	PERCENT RECOVERY	RECOVERY LIMITS
Toluene-d8	104	(85 - 117)
	106	(85 - 117)
Dibromofluoromethane	102	(76 - 131)
	106	(76 - 131)
1,2-Dichloroethane-d4	109	(76 - 125)
	106	(76 - 125)

(Continued on next page)

LABORATORY CONTROL SAMPLE EVALUATION REPORT

GC/MS Volatiles

Client Lot #...: F5B160118 **Work Order #...:** G4NPN1AC-LCS **Matrix.....:** WATER
LCS Lot-Sample#: F5B180000-095 G4NPN1AD-LCSD

SURROGATE	PERCENT RECOVERY	RECOVERY LIMITS
4-Bromofluorobenzene	95	(82 - 121)
	96	(82 - 121)

NOTE(S):

Calculations are performed before rounding to avoid round-off errors in calculated results.

Bold print denotes control parameters

a Spiked analyte recovery is outside stated control limits.

LABORATORY CONTROL SAMPLE EVALUATION REPORT

GC/MS Semivolatiles

Client Lot #...: F5B160118 Work Order #...: G4QQ91AC Matrix.....: WATER
LCS Lot-Sample#: F5B180000-452
Prep Date.....: 02/18/05 Analysis Date..: 02/21/05
Prep Batch #...: 5049452 Analysis Time..: 13:13
Dilution Factor: 1

PARAMETER	PERCENT RECOVERY	RECOVERY LIMITS	METHOD
Phenol	12 a	(18 - 40)	SW846 8270C
bis(2-Chloroethyl)-ether	30 a	(35 - 92)	SW846 8270C
2-Chlorophenol	26 a	(40 - 84)	SW846 8270C
1,3-Dichlorobenzene	20 a	(50 - 150)	SW846 8270C
1,4-Dichlorobenzene	21 a	(50 - 150)	SW846 8270C
1,2-Dichlorobenzene	22 a	(50 - 150)	SW846 8270C
2-Methylphenol	24 a	(36 - 78)	SW846 8270C
2,2'-oxybis(1-Chloropropa	29 a	(41 - 99)	SW846 8270C
N-Nitrosodi-n-propyl-amine	35 a	(52 - 108)	SW846 8270C
Hexachloroethane	20 a	(30 - 79)	SW846 8270C
Nitrobenzene	31 a	(46 - 97)	SW846 8270C
Isophorone	33 a	(54 - 106)	SW846 8270C
2-Nitrophenol	28 a	(45 - 95)	SW846 8270C
2,4-Dimethylphenol	27 a	(44 - 90)	SW846 8270C
bis(2-Chloroethoxy) methane	31 a	(48 - 99)	SW846 8270C
2,4-Dichlorophenol	28 a	(45 - 94)	SW846 8270C
1,2,4-Trichloro-benzene	21 a	(38 - 84)	SW846 8270C
Naphthalene	25 a	(45 - 91)	SW846 8270C
4-Chloroaniline	27 a	(31 - 126)	SW846 8270C
Hexachlorobutadiene	18 a	(32 - 78)	SW846 8270C
4-Chloro-3-methylphenol	29 a	(51 - 93)	SW846 8270C
2-Methylnaphthalene	23 a	(28 - 110)	SW846 8270C
Hexachlorocyclopenta-diene	17	(14 - 89)	SW846 8270C
2,4,6-Trichloro-phenol	29 a	(48 - 97)	SW846 8270C
2,4,5-Trichloro-phenol	29 a	(49 - 99)	SW846 8270C
2-Nitroaniline	32 a	(52 - 110)	SW846 8270C
Dimethyl phthalate	37 a	(58 - 102)	SW846 8270C

(Continued on next page)

LABORATORY CONTROL SAMPLE EVALUATION REPORT

GC/MS Semivolatiles

Client Lot #...: F5B160118 Work Order #...: G4QQ91AC Matrix.....: WATER
LCS Lot-Sample#: F5B180000-452

PARAMETER	PERCENT RECOVERY	RECOVERY LIMITS	METHOD
Acenaphthylene	29 a	(52 - 100)	SW846 8270C
2,6-Dinitrotoluene	38 a	(60 - 104)	SW846 8270C
3-Nitroaniline	34 a	(51 - 115)	SW846 8270C
Acenaphthene	27 a	(53 - 100)	SW846 8270C
2,4-Dinitrophenol	37	(24 - 118)	SW846 8270C
4-Nitrophenol	15 a	(17 - 45)	SW846 8270C
Dibenzofuran	27 a	(49 - 102)	SW846 8270C
2,4-Dinitrotoluene	41 a	(65 - 113)	SW846 8270C
Diethyl phthalate	41 a	(50 - 106)	SW846 8270C
Fluorene	32 a	(58 - 101)	SW846 8270C
4-Chlorophenyl phenyl ether	29 a	(55 - 99)	SW846 8270C
4-Nitroaniline	38 a	(53 - 116)	SW846 8270C
4,6-Dinitro-2-methylphenol	39 a	(46 - 106)	SW846 8270C
N-Nitrosodiphenylamine	39 a	(59 - 110)	SW846 8270C
4-Bromophenyl phenyl ether	33 a	(54 - 99)	SW846 8270C
Hexachlorobenzene	38 a	(58 - 105)	SW846 8270C
Pentachlorophenol	36 a	(37 - 109)	SW846 8270C
Phenanthrene	37 a	(58 - 104)	SW846 8270C
Anthracene	38 a	(57 - 102)	SW846 8270C
Carbazole	39 a	(52 - 109)	SW846 8270C
Di-n-butyl phthalate	43 a	(57 - 108)	SW846 8270C
Fluoranthene	40 a	(57 - 105)	SW846 8270C
Pyrene	39 a	(56 - 108)	SW846 8270C
Butyl benzyl phthalate	41 a	(57 - 112)	SW846 8270C
Benzo(a)anthracene	40 a	(58 - 111)	SW846 8270C
3,3'-Dichlorobenzidine	35 a	(49 - 114)	SW846 8270C
Chrysene	43 a	(54 - 115)	SW846 8270C
bis(2-Ethylhexyl) phthalate	42 a	(55 - 112)	SW846 8270C
Di-n-octyl phthalate	40 a	(50 - 106)	SW846 8270C
Benzo(b)fluoranthene	39 a	(52 - 111)	SW846 8270C
Benzo(k)fluoranthene	42 a	(57 - 123)	SW846 8270C
Benzo(a)pyrene	40 a	(55 - 104)	SW846 8270C
Indeno(1,2,3-cd)pyrene	38 a	(43 - 119)	SW846 8270C

(Continued on next page)

LABORATORY CONTROL SAMPLE EVALUATION REPORT

GC/MS Semivolatiles

Client Lot #...: F5B160118 Work Order #...: G4QQ91AC Matrix.....: WATER
LCS Lot-Sample#: F5B180000-452

PARAMETER	PERCENT RECOVERY	RECOVERY LIMITS	METHOD
Benzo(ghi)perylene	**40 a**	**(42 - 121)**	**SW846 8270C**
Dibenzo(a,h)anthracene	**39 a**	**(43 - 128)**	**SW846 8270C**
3-Methylphenol & 4-Methylphenol	**22 a**	**(30 - 79)**	**SW846 8270C**

SURROGATE	PERCENT RECOVERY	RECOVERY LIMITS
2-Fluorophenol	16 *	(24 - 58)
Phenol-d5	12 *	(16 - 41)
Nitrobenzene-d5	30 *	(48 - 103)
2-Fluorobiphenyl	29 *	(53 - 107)
2,4,6-Tribromophenol	37 *	(57 - 107)
Terphenyl-d14	30 *	(48 - 102)

NOTE(S):

Calculations are performed before rounding to avoid round-off errors in calculated results.

Bold print denotes control parameters

a Spiked analyte recovery is outside stated control limits.

* Surrogate recovery is outside stated control limits.

LABORATORY CONTROL SAMPLE EVALUATION REPORT

TOTAL Metals

Client Lot #...: F5B160118 **Matrix.....:** WATER

PARAMETER	PERCENT RECOVERY	RECOVERY LIMITS	METHOD	PREPARATION-ANALYSIS DATE	WORK ORDER #
LCS Lot-Sample#: F5B160000-307 **Prep Batch #...:** 5047307					
Silver	100	(80 - 120)	SW846 6010B	02/16-02/17/05	G4JRN1A6
		Dilution Factor: 1	Analysis Time..: 12:06		
Aluminum	104	(80 - 120)	SW846 6010B	02/16-02/17/05	G4JRN1A7
		Dilution Factor: 1	Analysis Time..: 12:06		
Barium	105	(80 - 120)	SW846 6010B	02/16-02/17/05	G4JRN1A8
		Dilution Factor: 1	Analysis Time..: 12:06		
Beryllium	108	(80 - 120)	SW846 6010B	02/16-02/17/05	G4JRN1A9
		Dilution Factor: 1	Analysis Time..: 12:06		
Calcium	103	(80 - 120)	SW846 6010B	02/16-02/17/05	G4JRN1CA
		Dilution Factor: 1	Analysis Time..: 12:06		
Cadmium	102	(80 - 120)	SW846 6010B	02/16-02/17/05	G4JRN1CC
		Dilution Factor: 1	Analysis Time..: 12:06		
Cobalt	100	(80 - 120)	SW846 6010B	02/16-02/17/05	G4JRN1CD
		Dilution Factor: 1	Analysis Time..: 12:06		
Chromium	101	(80 - 120)	SW846 6010B	02/16-02/17/05	G4JRN1CE
		Dilution Factor: 1	Analysis Time..: 12:06		
Copper	101	(80 - 120)	SW846 6010B	02/16-02/17/05	G4JRN1CF
		Dilution Factor: 1	Analysis Time..: 12:06		
Iron	111	(80 - 120)	SW846 6010B	02/16-02/17/05	G4JRN1CG
		Dilution Factor: 1	Analysis Time..: 12:32		
Potassium	102	(80 - 120)	SW846 6010B	02/16-02/17/05	G4JRN1CH
		Dilution Factor: 1	Analysis Time..: 12:32		
Magnesium	99	(80 - 120)	SW846 6010B	02/16-02/17/05	G4JRN1CJ
		Dilution Factor: 1	Analysis Time..: 12:06		
Manganese	103	(80 - 120)	SW846 6010B	02/16-02/17/05	G4JRN1CK
		Dilution Factor: 1	Analysis Time..: 12:06		
Sodium	109	(80 - 120)	SW846 6010B	02/16-02/17/05	G4JRN1CL
		Dilution Factor: 1	Analysis Time..: 12:32		

(Continued on next page)

LABORATORY CONTROL SAMPLE EVALUATION REPORT

TOTAL Metals

Client Lot #...: F5B160118 **Matrix.....:** WATER

PARAMETER	PERCENT RECOVERY	RECOVERY LIMITS	METHOD	PREPARATION-ANALYSIS DATE	WORK ORDER #
Nickel	100	(80 - 120)	SW846 6010B	02/16-02/17/05	G4JRN1CM
		Dilution Factor: 1	Analysis Time..: 12:06		
Antimony	100	(80 - 120)	SW846 6010B	02/16-02/17/05	G4JRN1CN
		Dilution Factor: 1	Analysis Time..: 12:06		
Vanadium	101	(80 - 120)	SW846 6010B	02/16-02/17/05	G4JRN1CP
		Dilution Factor: 1	Analysis Time..: 12:06		
Zinc	102	(80 - 120)	SW846 6010B	02/16-02/17/05	G4JRN1CQ
		Dilution Factor: 1	Analysis Time..: 12:06		
Arsenic	99	(80 - 120)	SW846 6010B	02/16-02/17/05	G4JRN1A2
		Dilution Factor: 1	Analysis Time..: 12:06		
Lead	100	(80 - 120)	SW846 6010B	02/16-02/17/05	G4JRN1A3
		Dilution Factor: 1	Analysis Time..: 12:06		
Selenium	97	(80 - 120)	SW846 6010B	02/16-02/17/05	G4JRN1A4
		Dilution Factor: 1	Analysis Time..: 12:06		
Thallium	101	(80 - 120)	SW846 6010B	02/16-02/17/05	G4JRN1A5
		Dilution Factor: 1	Analysis Time..: 12:06		

NOTE(S):

Calculations are performed before rounding to avoid round-off errors in calculated results.

LABORATORY CONTROL SAMPLE EVALUATION REPORT

General Chemistry

Client Lot #...: F5B160118 **Matrix.....:** WATER

PARAMETER	PERCENT RECOVERY	RECOVERY LIMITS	METHOD	PREPARATION-ANALYSIS DATE	PREP BATCH #
pH (liquid)		Work Order #: G4MWF1AA	LCS Lot-Sample#: F5B160000-309		
	100	(99 - 101)	SW846 9040	02/16/05	5047309
		Dilution Factor: 1	Analysis Time..: 00:00		

NOTE(S):

Calculations are performed before rounding to avoid round-off errors in calculated results.

MATRIX SPIKE SAMPLE EVALUATION REPORT

GC/MS Volatiles

Client Lot #...: F5B160118 Work Order #...: G4ALC1AP-MS Matrix.....: WATER
MS Lot-Sample #: F5B110319-001 G4ALC1AQ-MSD
Date Sampled...: 02/10/05 10:16 Date Received..: 02/11/05
Prep Date.....: 02/17/05 Analysis Date..: 02/17/05
Prep Batch #...: 5049094 Analysis Time..: 23:33
Dilution Factor: 1

PARAMETER	PERCENT RECOVERY	RECOVERY LIMITS	RPD	RPD LIMITS	METHOD
cis-1,3-Dichloropropene	109	(75 - 127)			SW846 8260B
	116	(75 - 127)	5.9	(0-20)	SW846 8260B
Dibromochloromethane	110	(78 - 143)			SW846 8260B
	114	(78 - 143)	3.4	(0-20)	SW846 8260B
Chloromethane	81	(10 - 146)			SW846 8260B
	89	(10 - 146)	9.0	(0-20)	SW846 8260B
Vinyl chloride	85	(10 - 148)			SW846 8260B
	92	(10 - 148)	7.1	(0-20)	SW846 8260B
Bromomethane	66	(10 - 148)			SW846 8260B
	78	(10 - 148)	14	(0-20)	SW846 8260B
Chloroethane	101	(37 - 135)			SW846 8260B
	109	(37 - 135)	7.8	(0-20)	SW846 8260B
Acetone	114	(10 - 150)			SW846 8260B
	95	(10 - 150)	16	(0-20)	SW846 8260B
1,1-Dichloroethene	83	(54 - 129)			SW846 8260B
	89	(54 - 129)	6.7	(0-20)	SW846 8260B
Methylene chloride	96	(55 - 101)			SW846 8260B
	100	(55 - 101)	4.0	(0-20)	SW846 8260B
Carbon disulfide	88	(43 - 151)			SW846 8260B
	91	(43 - 151)	2.5	(0-20)	SW846 8260B
1,1-Dichloroethane	94	(79 - 118)			SW846 8260B
	96	(79 - 118)	2.5	(0-20)	SW846 8260B
2-Butanone	140 a	(45 - 138)			SW846 8260B
	140 a	(45 - 138)	0.49	(0-20)	SW846 8260B
1,2-Dichloroethene (total)	95	(80 - 123)			SW846 8260B
	102	(80 - 123)	6.5	(0-20)	SW846 8260B
Chloroform	94	(81 - 119)			SW846 8260B
	93	(81 - 119)	0.55	(0-20)	SW846 8260B
1,1,1-Trichloroethane	101	(78 - 120)			SW846 8260B
	101	(78 - 120)	0.39	(0-20)	SW846 8260B
Carbon tetrachloride	0.0 a	(70 - 130)			SW846 8260B
	0.0 a	(70 - 130)	0.0	(0-20)	SW846 8260B
1,2-Dichloroethane	102	(74 - 124)			SW846 8260B
	104	(74 - 124)	2.3	(0-20)	SW846 8260B
Benzene	101	(82 - 114)			SW846 8260B
	102	(82 - 114)	0.58	(0-20)	SW846 8260B
Trichloroethene	91	(68 - 124)			SW846 8260B
	93	(68 - 124)	1.5	(0-20)	SW846 8260B

(Continued on next page)

MATRIX SPIKE SAMPLE EVALUATION REPORT

GC/MS Volatiles

Client Lot #...: F5B160118 Work Order #...: G4ALC1AP-MS Matrix.....: WATER
MS Lot-Sample #: F5B110319-001 G4ALC1AQ-MSD

PARAMETER	PERCENT RECOVERY	RECOVERY LIMITS	RPD	RPD LIMITS	METHOD
1,2-Dichloropropane	106	(78 - 124)			SW846 8260B
	105	(78 - 124)	1.3	(0-20)	SW846 8260B
Bromodichloromethane	104	(77 - 127)			SW846 8260B
	100	(77 - 127)	3.4	(0-20)	SW846 8260B
1,1,2-Trichloroethane	111	(77 - 126)			SW846 8260B
	110	(77 - 126)	0.72	(0-20)	SW846 8260B
trans-1,3-Dichloropropene	117	(83 - 140)			SW846 8260B
	128	(83 - 140)	8.6	(0-20)	SW846 8260B
Toluene	95	(84 - 117)			SW846 8260B
	94	(84 - 117)	0.20	(0-20)	SW846 8260B
m-Xylene & p-Xylene	101	(85 - 117)			SW846 8260B
	101	(85 - 117)	0.0	(0-20)	SW846 8260B
o-Xylene	100	(85 - 119)			SW846 8260B
	102	(85 - 119)	2.0	(0-20)	SW846 8260B
1,3-Dichlorobenzene	98	(85 - 116)			SW846 8260B
	99	(85 - 116)	1.4	(0-20)	SW846 8260B
1,4-Dichlorobenzene	96	(85 - 113)			SW846 8260B
	97	(85 - 113)	1.0	(0-20)	SW846 8260B
1,2-Dichlorobenzene	101	(85 - 117)			SW846 8260B
	102	(85 - 117)	1.8	(0-20)	SW846 8260B
2-Hexanone	115	(43 - 134)			SW846 8260B
	130	(43 - 134)	12	(0-20)	SW846 8260B
4-Methyl-2-pentanone	101	(45 - 142)			SW846 8260B
	112	(45 - 142)	11	(0-20)	SW846 8260B
Chlorobenzene	100	(85 - 115)			SW846 8260B
	101	(85 - 115)	1.5	(0-20)	SW846 8260B
Bromoform	100	(64 - 149)			SW846 8260B
	102	(64 - 149)	2.3	(0-20)	SW846 8260B
Ethylbenzene	101	(85 - 116)			SW846 8260B
	101	(85 - 116)	0.39	(0-20)	SW846 8260B
Styrene	63 a	(74 - 128)			SW846 8260B
	72 a	(74 - 128)	12	(0-20)	SW846 8260B
1,1,2,2-Tetrachloroethane	109	(72 - 136)			SW846 8260B
	110	(72 - 136)	1.4	(0-20)	SW846 8260B
Tetrachloroethene	60 a	(73 - 122)			SW846 8260B
	58 a	(73 - 122)	2.9	(0-20)	SW846 8260B

SURROGATE	PERCENT RECOVERY	RECOVERY LIMITS
Toluene-d8	101	(85 - 117)
	100	(85 - 117)

(Continued on next page)

MATRIX SPIKE SAMPLE EVALUATION REPORT

GC/MS Volatiles

Client Lot #...: F5B160118 **Work Order #...:** G4ALC1AP-MS **Matrix.....:** WATER
MS Lot-Sample #: F5B110319-001 G4ALC1AQ-MSD

SURROGATE	PERCENT RECOVERY	RECOVERY LIMITS
Dibromofluoromethane	128	(72 - 136)
	127	(72 - 136)
1,2-Dichloroethane-d4	108	(78 - 125)
	110	(78 - 125)
4-Bromofluorobenzene	93	(79 - 120)
	92	(79 - 120)

NOTE(S):

Calculations are performed before rounding to avoid round-off errors in calculated results.

Bold print denotes control parameters

a Spiked analyte recovery is outside stated control limits.

MATRIX SPIKE SAMPLE EVALUATION REPORT

GC/MS Semivolatiles

Client Lot #...: F5B160118 Work Order #...: G4F9T1EF-MS Matrix.....: WATER
MS Lot-Sample #: F5B150247-006 G4F9T1EG-MSD
Date Sampled...: 02/14/05 12:09 Date Received..: 02/15/05
Prep Date.....: 02/18/05 Analysis Date..: 02/21/05
Prep Batch #...: 5049452 Analysis Time..: 21:20
Dilution Factor: 1

PARAMETER	PERCENT RECOVERY	RECOVERY LIMITS	RPD	RPD LIMITS	METHOD
Phenol	27	(10 - 115)			SW846 8270C
	28	(10 - 115)	1.3	(0-20)	SW846 8270C
bis(2-Chloroethyl)-ether	68	(32 - 115)			SW846 8270C
	70	(32 - 115)	3.4	(0-20)	SW846 8270C
2-Chlorophenol	60	(21 - 115)			SW846 8270C
	62	(21 - 115)	2.3	(0-20)	SW846 8270C
1,3-Dichlorobenzene	52	(50 - 150)			SW846 8270C
	54	(50 - 150)	3.7	(0-20)	SW846 8270C
1,4-Dichlorobenzene	54	(50 - 150)			SW846 8270C
	55	(50 - 150)	3.6	(0-20)	SW846 8270C
1,2-Dichlorobenzene	55	(50 - 150)			SW846 8270C
	58	(50 - 150)	3.8	(0-20)	SW846 8270C
2-Methylphenol	53	(31 - 115)			SW846 8270C
	54	(31 - 115)	1.8	(0-20)	SW846 8270C
3-Methylphenol & 4-Methylphenol	49	(22 - 115)			SW846 8270C
	50	(22 - 115)	1.8	(0-28)	SW846 8270C
2,2'-oxybis(1-Chloropropa	69	(33 - 115)			SW846 8270C
	71	(33 - 115)	2.0	(0-20)	SW846 8270C
N-Nitrosodi-n-propyl-amine	82	(29 - 115)			SW846 8270C
	84	(29 - 115)	1.8	(0-20)	SW846 8270C
Hexachloroethane	48	(20 - 115)			SW846 8270C
	50	(20 - 115)	4.0	(0-20)	SW846 8270C
Nitrobenzene	72	(34 - 115)			SW846 8270C
	73	(34 - 115)	1.8	(0-20)	SW846 8270C
Isophorone	80	(23 - 116)			SW846 8270C
	80	(23 - 116)	0.42	(0-20)	SW846 8270C
2-Nitrophenol	66	(28 - 115)			SW846 8270C
	69	(28 - 115)	3.1	(0-20)	SW846 8270C
2,4-Dimethylphenol	64	(24 - 115)			SW846 8270C
	65	(24 - 115)	0.88	(0-20)	SW846 8270C
bis(2-Chloroethoxy) methane	73	(32 - 115)			SW846 8270C
	74	(32 - 115)	1.4	(0-20)	SW846 8270C

(Continued on next page)

MATRIX SPIKE SAMPLE EVALUATION REPORT

GC/MS Semivolatiles

Client Lot #...: F5B160118 Work Order #...: G4F9T1EF-MS Matrix.....: WATER
MS Lot-Sample #: F5B150247-006 G4F9T1EG-MSD

PARAMETER	PERCENT RECOVERY	RECOVERY LIMITS	RPD	RPD LIMITS	METHOD
2,4-Dichlorophenol	68	(37 - 115)			SW846 8270C
	70	(37 - 115)	3.2	(0-20)	SW846 8270C
1,2,4-Trichloro-benzene	54	(19 - 115)			SW846 8270C
	56	(19 - 115)	4.4	(0-20)	SW846 8270C
Naphthalene	63	(32 - 115)			SW846 8270C
	64	(32 - 115)	1.7	(0-20)	SW846 8270C
4-Chloroaniline	68	(17 - 115)			SW846 8270C
	69	(17 - 115)	1.8	(0-20)	SW846 8270C
Hexachlorobutadiene	43	(18 - 115)			SW846 8270C
	45	(18 - 115)	5.6	(0-20)	SW846 8270C
4-Chloro-3-methylphenol	72	(19 - 115)			SW846 8270C
	72	(19 - 115)	0.09	(0-20)	SW846 8270C
2-Methylnaphthalene	60	(32 - 115)			SW846 8270C
	61	(32 - 115)	1.4	(0-20)	SW846 8270C
Hexachlorocyclopenta-diene	47	(10 - 115)			SW846 8270C
	50	(10 - 115)	5.9	(0-20)	SW846 8270C
2,4,6-Trichloro-phenol	72	(38 - 115)			SW846 8270C
	74	(38 - 115)	2.6	(0-20)	SW846 8270C
2,4,5-Trichloro-phenol	72	(41 - 115)			SW846 8270C
	74	(41 - 115)	2.6	(0-20)	SW846 8270C
2-Nitroaniline	77	(41 - 115)			SW846 8270C
	79	(41 - 115)	2.4	(0-20)	SW846 8270C
Dimethyl phthalate	84	(53 - 115)			SW846 8270C
	85	(53 - 115)	1.3	(0-20)	SW846 8270C
Acenaphthylene	77	(43 - 115)			SW846 8270C
	79	(43 - 115)	2.8	(0-20)	SW846 8270C
2,6-Dinitrotoluene	85	(56 - 115)			SW846 8270C
	87	(56 - 115)	2.3	(0-20)	SW846 8270C
3-Nitroaniline	78	(54 - 115)			SW846 8270C
	79	(54 - 115)	1.1	(0-20)	SW846 8270C
Acenaphthene	72	(26 - 115)			SW846 8270C
	74	(26 - 115)	2.5	(0-20)	SW846 8270C
2,4-Dinitrophenol	87	(24 - 134)			SW846 8270C
	87	(24 - 134)	0.23	(0-20)	SW846 8270C

(Continued on next page)

MATRIX SPIKE SAMPLE EVALUATION REPORT

GC/MS Semivolatiles

Client Lot #...: F5B160118 Work Order #...: G4F9T1EF-MS Matrix.....: WATER
MS Lot-Sample #: F5B150247-006 G4F9T1EG-MSD

PARAMETER	PERCENT RECOVERY	RECOVERY LIMITS	RPD	RPD LIMITS	METHOD
4-Nitrophenol	32	(10 - 115)			SW846 8270C
	33	(10 - 115)	1.0	(0-20)	SW846 8270C
Dibenzofuran	70	(40 - 115)			SW846 8270C
	72	(40 - 115)	2.8	(0-20)	SW846 8270C
2,4-Dinitrotoluene	89	(11 - 150)			SW846 8270C
	92	(11 - 150)	3.2	(0-20)	SW846 8270C
Diethyl phthalate	90	(56 - 117)			SW846 8270C
	91	(56 - 117)	1.8	(0-20)	SW846 8270C
Fluorene	80	(45 - 115)			SW846 8270C
	82	(45 - 115)	2.3	(0-20)	SW846 8270C
4-Chlorophenyl phenyl ether	77	(47 - 115)			SW846 8270C
	79	(47 - 115)	2.6	(0-20)	SW846 8270C
4-Nitroaniline	82	(54 - 115)			SW846 8270C
	84	(54 - 115)	2.5	(0-20)	SW846 8270C
4,6-Dinitro-2-methylphenol	84	(50 - 115)			SW846 8270C
	88	(50 - 115)	4.5	(0-20)	SW846 8270C
N-Nitrosodiphenylamine	84	(57 - 115)			SW846 8270C
	87	(57 - 115)	3.6	(0-20)	SW846 8270C
4-Bromophenyl phenyl ether	78	(51 - 115)			SW846 8270C
	80	(51 - 115)	1.9	(0-20)	SW846 8270C
Hexachlorobenzene	83	(50 - 115)			SW846 8270C
	86	(50 - 115)	3.7	(0-20)	SW846 8270C
Pentachlorophenol	81	(11 - 121)			SW846 8270C
	84	(11 - 121)	3.7	(0-20)	SW846 8270C
Phenanthrene	79	(55 - 115)			SW846 8270C
	83	(55 - 115)	4.1	(0-20)	SW846 8270C
Anthracene	83	(55 - 115)			SW846 8270C
	85	(55 - 115)	3.2	(0-20)	SW846 8270C
Carbazole	81	(54 - 115)			SW846 8270C
	84	(54 - 115)	3.9	(0-20)	SW846 8270C
Di-n-butyl phthalate	88	(60 - 115)			SW846 8270C
	90	(60 - 115)	2.1	(0-20)	SW846 8270C
Fluoranthene	82	(57 - 115)			SW846 8270C
	85	(57 - 115)	3.6	(0-20)	SW846 8270C
Pyrene	81	(43 - 115)			SW846 8270C
	82	(43 - 115)	1.3	(0-20)	SW846 8270C

(Continued on next page)

MATRIX SPIKE SAMPLE EVALUATION REPORT

GC/MS Semivolatiles

Client Lot #...: F5B160118 Work Order #...: G4F9T1EF-MS Matrix.....: WATER
MS Lot-Sample #: F5B150247-006 G4F9T1EG-MSD

PARAMETER	PERCENT RECOVERY	RECOVERY LIMITS	RPD	RPD LIMITS	METHOD
Butyl benzyl phthalate	83	(55 - 115)			SW846 8270C
	85	(55 - 115)	3.2	(0-20)	SW846 8270C
Benzo(a)anthracene	82	(56 - 115)			SW846 8270C
	85	(56 - 115)	4.1	(0-20)	SW846 8270C
3,3'-Dichlorobenzidine	78	(29 - 120)			SW846 8270C
	81	(29 - 120)	4.2	(0-20)	SW846 8270C
Chrysene	86	(21 - 150)			SW846 8270C
	89	(21 - 150)	3.4	(0-20)	SW846 8270C
bis(2-Ethylhexyl) phthalate	85	(56 - 115)			SW846 8270C
	87	(56 - 115)	3.0	(0-20)	SW846 8270C
Di-n-octyl phthalate	82	(55 - 115)			SW846 8270C
	84	(55 - 115)	1.7	(0-20)	SW846 8270C
Benzo(b)fluoranthene	80	(53 - 115)			SW846 8270C
	82	(53 - 115)	2.1	(0-20)	SW846 8270C
Benzo(k)fluoranthene	88	(54 - 115)			SW846 8270C
	87	(54 - 115)	0.88	(0-20)	SW846 8270C
Benzo(a)pyrene	82	(30 - 126)			SW846 8270C
	84	(30 - 126)	1.7	(0-20)	SW846 8270C
Indeno(1,2,3-cd)pyrene	78	(17 - 150)			SW846 8270C
	79	(17 - 150)	1.2	(0-20)	SW846 8270C
Benzo(ghi)perylene	83	(10 - 150)			SW846 8270C
	84	(10 - 150)	1.2	(0-20)	SW846 8270C
Dibenzo(a,h)anthracene	80	(13 - 150)			SW846 8270C
	82	(13 - 150)	2.3	(0-20)	SW846 8270C

SURROGATE	PERCENT RECOVERY	RECOVERY LIMITS
2-Fluorophenol	35	(10 - 115)
	36	(10 - 115)
Phenol-d5	25	(10 - 115)
	25	(10 - 115)
Nitrobenzene-d5	72	(22 - 115)
	73	(22 - 115)
2-Fluorobiphenyl	73	(18 - 115)
	75	(18 - 115)
2,4,6-Tribromophenol	85	(10 - 118)
	86	(10 - 118)
Terphenyl-d14	54	(10 - 115)
	56	(10 - 115)

NOTE(S):

Calculations are performed before rounding to avoid round-off errors in calculated results.

Bold print denotes control parameters

MATRIX SPIKE SAMPLE EVALUATION REPORT

TOTAL Metals

Client Lot #...: F5B160118 **Matrix.....:** WATER
Date Sampled...: 02/15/05 11:05 **Date Received..:** 02/16/05

PARAMETER	PERCENT RECOVERY	RECOVERY LIMITS	RPD	RPD LIMITS	METHOD	PREPARATION-ANALYSIS DATE	WORK ORDER #
MS Lot-Sample #: F5B160118-001 **Prep Batch #...:** 5047307							
Aluminum	104	(75 - 125)			SW846 6010B	02/16-02/17/05	G4HLF1CQ
	104	(75 - 125)	0.24	(0-20)	SW846 6010B	02/16-02/17/05	G4HLF1CR
		Dilution Factor: 1					
		Analysis Time..: 12:14					
Antimony	98	(75 - 125)			SW846 6010B	02/16-02/17/05	G4HLF1DN
	97	(75 - 125)	0.66	(0-20)	SW846 6010B	02/16-02/17/05	G4HLF1DP
		Dilution Factor: 1					
		Analysis Time..: 12:14					
Barium	102	(75 - 125)			SW846 6010B	02/16-02/17/05	G4HLF1CT
	102	(75 - 125)	0.01	(0-20)	SW846 6010B	02/16-02/17/05	G4HLF1CU
		Dilution Factor: 1					
		Analysis Time..: 12:14					
Beryllium	106	(75 - 125)			SW846 6010B	02/16-02/17/05	G4HLF1CV
	105	(75 - 125)	0.53	(0-20)	SW846 6010B	02/16-02/17/05	G4HLF1CW
		Dilution Factor: 1					
		Analysis Time..: 12:14					
Cadmium	99	(75 - 116)			SW846 6010B	02/16-02/17/05	G4HLF1C1
	98	(75 - 116)	0.44	(0-125)	SW846 6010B	02/16-02/17/05	G4HLF1C2
		Dilution Factor: 1					
		Analysis Time..: 12:14					
Calcium	98	(75 - 125)			SW846 6010B	02/16-02/17/05	G4HLF1CX
	97	(75 - 125)	0.75	(0-20)	SW846 6010B	02/16-02/17/05	G4HLF1C0
		Dilution Factor: 1					
		Analysis Time..: 12:14					
Chromium	100	(75 - 125)			SW846 6010B	02/16-02/17/05	G4HLF1C5
	100	(75 - 125)	0.35	(0-20)	SW846 6010B	02/16-02/17/05	G4HLF1C6
		Dilution Factor: 1					
		Analysis Time..: 12:14					
Cobalt	96	(75 - 125)			SW846 6010B	02/16-02/17/05	G4HLF1C3
	95	(75 - 125)	0.53	(0-20)	SW846 6010B	02/16-02/17/05	G4HLF1C4
		Dilution Factor: 1					
		Analysis Time..: 12:14					

(Continued on next page)

MATRIX SPIKE SAMPLE EVALUATION REPORT

TOTAL Metals

Client Lot #...: F5B160118 **Matrix.....:** WATER
Date Sampled...: 02/15/05 11:05 **Date Received..:** 02/16/05

PARAMETER	PERCENT RECOVERY	RECOVERY LIMITS	RPD	RPD LIMITS	METHOD	PREPARATION-ANALYSIS DATE	WORK ORDER #
Copper	102	(75 - 125)			SW846 6010B	02/16-02/17/05	G4HLF1C7
	102	(75 - 125)	0.23	(0-20)	SW846 6010B	02/16-02/17/05	G4HLF1C8
		Dilution Factor: 1					
		Analysis Time..: 12:14					
Iron	85	(75 - 125)			SW846 6010B	02/16-02/17/05	G4HLF1C9
	80	(75 - 125)	1.5	(0-20)	SW846 6010B	02/16-02/17/05	G4HLF1DA
		Dilution Factor: 1					
		Analysis Time..: 12:41					
Magnesium	98	(75 - 125)			SW846 6010B	02/16-02/17/05	G4HLF1DE
	98	(75 - 125)	0.46	(0-20)	SW846 6010B	02/16-02/17/05	G4HLF1DF
		Dilution Factor: 1					
		Analysis Time..: 12:14					
Manganese	95	(75 - 125)			SW846 6010B	02/16-02/17/05	G4HLF1DG
	93	(75 - 125)	0.93	(0-20)	SW846 6010B	02/16-02/17/05	G4HLF1DH
		Dilution Factor: 1					
		Analysis Time..: 12:14					
Nickel	98	(75 - 125)			SW846 6010B	02/16-02/17/05	G4HLF1DL
	97	(75 - 125)	0.60	(0-20)	SW846 6010B	02/16-02/17/05	G4HLF1DM
		Dilution Factor: 1					
		Analysis Time..: 12:14					
Potassium	99	(75 - 125)			SW846 6010B	02/16-02/17/05	G4HLF1DC
	97	(75 - 125)	1.9	(0-20)	SW846 6010B	02/16-02/17/05	G4HLF1DD
		Dilution Factor: 1					
		Analysis Time..: 12:41					
Silver	99	(75 - 125)			SW846 6010B	02/16-02/17/05	G4HLF1CN
	99	(75 - 125)	0.36	(0-20)	SW846 6010B	02/16-02/17/05	G4HLF1CP
		Dilution Factor: 1					
		Analysis Time..: 12:14					
Sodium	102	(75 - 125)			SW846 6010B	02/16-02/17/05	G4HLF1DJ
	99	(75 - 125)	1.6	(0-20)	SW846 6010B	02/16-02/17/05	G4HLF1DK
		Dilution Factor: 1					
		Analysis Time..: 12:41					
Vanadium	99	(75 - 125)			SW846 6010B	02/16-02/17/05	G4HLF1DQ
	98	(75 - 125)	0.52	(0-20)	SW846 6010B	02/16-02/17/05	G4HLF1DR
		Dilution Factor: 1					
		Analysis Time..: 12:14					

(Continued on next page)

MATRIX SPIKE SAMPLE EVALUATION REPORT

TOTAL Metals

Client Lot #...: F5B160118 **Matrix.....:** WATER
Date Sampled...: 02/15/05 11:05 **Date Received..:** 02/16/05

PARAMETER	PERCENT RECOVERY	RECOVERY LIMITS	RPD	RPD LIMITS	METHOD	PREPARATION-ANALYSIS DATE	WORK ORDER #
Zinc	98	(75 - 125)			SW846 6010B	02/16-02/17/05	G4HLF1DT
	98	(75 - 125)	0.70	(0-20)	SW846 6010B	02/16-02/17/05	G4HLF1DU
		Dilution Factor: 1					
		Analysis Time..: 12:14					
Arsenic	97	(75 - 125)			SW846 6010B	02/16-02/17/05	G4HLF1CE
	96	(75 - 125)	0.31	(0-20)	SW846 6010B	02/16-02/17/05	G4HLF1CF
		Dilution Factor: 1					
		Analysis Time..: 12:14					
Arsenic	97	(75 - 125)			SW846 6010B	02/16-02/17/05	G4HLF1DV
	96	(75 - 125)	0.31	(0-20)	SW846 6010B	02/16-02/17/05	G4HLF1DW
		Dilution Factor: 1					
		Analysis Time..: 12:14					
Lead	98	(75 - 125)			SW846 6010B	02/16-02/17/05	G4HLF1CG
	97	(75 - 125)	0.90	(0-20)	SW846 6010B	02/16-02/17/05	G4HLF1CH
		Dilution Factor: 1					
		Analysis Time..: 12:14					
Lead	98	(75 - 125)			SW846 6010B	02/16-02/17/05	G4HLF1DX
	97	(75 - 125)	0.90	(0-20)	SW846 6010B	02/16-02/17/05	G4HLF1D0
		Dilution Factor: 1					
		Analysis Time..: 12:14					
Selenium	95	(75 - 125)			SW846 6010B	02/16-02/17/05	G4HLF1CJ
	95	(75 - 125)	0.30	(0-20)	SW846 6010B	02/16-02/17/05	G4HLF1CK
		Dilution Factor: 1					
		Analysis Time..: 12:14					
Selenium	95	(75 - 125)			SW846 6010B	02/16-02/17/05	G4HLF1D1
	95	(75 - 125)	0.30	(0-20)	SW846 6010B	02/16-02/17/05	G4HLF1D2
		Dilution Factor: 1					
		Analysis Time..: 12:14					
Thallium	98	(75 - 125)			SW846 6010B	02/16-02/17/05	G4HLF1CL
	98	(75 - 125)	0.40	(0-20)	SW846 6010B	02/16-02/17/05	G4HLF1CM
		Dilution Factor: 1					
		Analysis Time..: 12:14					
Thallium	98	(75 - 125)			SW846 6010B	02/16-02/17/05	G4HLF1D3
	98	(75 - 125)	0.40	(0-20)	SW846 6010B	02/16-02/17/05	G4HLF1D4
		Dilution Factor: 1					
		Analysis Time..: 12:14					

NOTE(S):

Calculations are performed before rounding to avoid round-off errors in calculated results.

SAMPLE DUPLICATE EVALUATION REPORT

General Chemistry

Client Lot #...: F5B160118 **Work Order #...:** G4HGV-SMP G4HGV-DUP **Matrix.....:** WATER

Date Sampled...: 02/15/05 08:00 **Date Received..:** 02/16/05

PARAM	RESULT	DUPLICATE RESULT	UNITS	RPD	RPD LIMIT	METHOD	PREPARATION-ANALYSIS DATE	PREP BATCH #
pH (liquid)						SD Lot-Sample #:	F5B160110-001	
	9.2	9.2	No Units	0.22	(0-20)	SW846 9040	02/16/05	5047309

Dilution Factor: 1 Analysis Time..: 00:00

GTE OPERATIONS SUPPORT INCORPORATED

Client Sample ID: DECON WATER

Severn Trent Laboratories - Radiochemistry

Lab Sample ID: F5B160118-001
Work Order: G4HLF
Matrix: WATER

Date Collected: 02/15/05 1105
Date Received: 02/16/05 0900

Parameter	Result	Qual	Total Uncert. (2 σ+/-)	MDC	Prep Date	Analysis Date	Batch #	Yld %
Gamma Cs-137 & Hits by DOE GA-01-R MOD.			pCi/L		GA-01-R MOD			
Actinium 228	12	U	25	50	02/16/05	02/17/05	5047291	
Bismuth 212	28	U	49	100	02/16/05	02/17/05	5047291	
Bismuth 214	3	U	13	26	02/16/05	02/17/05	5047291	
Lead 212	7	U	11	21	02/16/05	02/17/05	5047291	
Lead 214	3	U	14	26	02/16/05	02/17/05	5047291	
Protactinium 234M	-450	U	800	1400	02/16/05	02/17/05	5047291	
Radium (226)	3	U	13	26	02/16/05	02/17/05	5047291	
Radium 228	13	U	25	51	02/16/05	02/17/05	5047291	
Thallium 208	4.6	U	7.0	14	02/16/05	02/17/05	5047291	
Thorium 232	13	U	25	51	02/16/05	02/17/05	5047291	
Thorium 234	-10	U	95	170	02/16/05	02/17/05	5047291	
Uranium 235	-37	U	79	130	02/16/05	02/17/05	5047291	
Uranium 238	-10	U	95	170	02/16/05	02/17/05	5047291	
Iso THORIUM (SHORT CT) NAS & DOE MOD			pCi/L		3004/RP-725			
Thorium 228	0.19	U	0.30	0.42	02/16/05	02/17/05	5047424	53
Thorium 230	0.22	U	0.21	0.23	02/16/05	02/17/05	5047424	53
Thorium 232	0.004	U	0.10	0.22	02/16/05	02/17/05	5047424	53
Iso URANIUM (SHORT CT) NAS & DOE MOD			pCi/L		3050/RP-725			
Uranium 234	2.94		0.55	0.11	02/16/05	02/18/05	5047427	93
Uranium 235	0.17	J	0.14	0.07	02/16/05	02/18/05	5047427	93
Uranium 238	2.16		0.46	0.09	02/16/05	02/18/05	5047427	93

NOTE(S)

Data are incomplete without the case narrative.

MDC is determined by instrument performance only.
Bold results are greater than the MDC

J Result is greater than sample detection limit but less than stated reporting limit.
U Result is less than the sample detection limit.

GTE OPERATIONS SUPPORT INCORPORATED

Client Sample ID: DECON WATER DUP

Severn Trent Laboratories - Radiochemistry

Lab Sample ID: F5B160118-001X
Work Order: G4HLF
Matrix: WATER

Date Collected: 02/15/05 1105
Date Received: 02/16/05 0900

Parameter	Result	Qual	Total Uncert. (2 σ+/-)	MDC	Prep Date	Analysis Date	Batch #	Yld %
Gamma Cs-137 & Hits by DOE GA-01-R MOD.			pCi/L		GA-01-R MOD			
Actinium 228	28	U	27	55	02/16/05	02/17/05	5047291	
Bismuth 212	-16	U	56	100	02/16/05	02/17/05	5047291	
Bismuth 214	-8	U	14	25	02/16/05	02/17/05	5047291	
Lead 212	4.8	U	9.5	18	02/16/05	02/17/05	5047291	
Lead 214	-0.6	U	12	23	02/16/05	02/17/05	5047291	
Protactinium 234M	-90	U	970	1800	02/16/05	02/17/05	5047291	
Radium (226)	-8	U	14	25	02/16/05	02/17/05	5047291	
Radium 228	30	U	26	56	02/16/05	02/17/05	5047291	
Thallium 208	1	U	7.6	14	02/16/05	02/17/05	5047291	
Thorium 232	30	U	26	56	02/16/05	02/17/05	5047291	
Thorium 234	8	U	93	170	02/16/05	02/17/05	5047291	
Uranium 235	32	U	73	130	02/16/05	02/17/05	5047291	
Uranium 238	9	U	93	170	02/16/05	02/17/05	5047291	
Iso THORIUM (SHORT CT) NAS & DOE MOD			pCi/L		3004/RP-725			
Thorium 228	0.21	U	0.33	0.46	02/16/05	02/17/05	5047424	59
Thorium 230	0.48	J	0.29	0.23	02/16/05	02/17/05	5047424	59
Thorium 232	0.06	U	0.11	0.19	02/16/05	02/17/05	5047424	59
Iso URANIUM (SHORT CT) NAS & DOE MOD			pCi/L		3050/RP-725			
Uranium 234	3.06		0.56	0.05	02/16/05	02/18/05	5047427	95
Uranium 235	0.12	J	0.12	0.06	02/16/05	02/18/05	5047427	95
Uranium 238	2.21		0.46	0.05	02/16/05	02/18/05	5047427	95

NOTE(S)

Data are incomplete without the case narrative.

MDC is determined by instrument performance only.
Bold results are greater than the MDC

J Result is greater than sample detection limit but less than stated reporting limit.
U Result is less than the sample detection limit.

METHOD BLANK REPORT

Severn Trent Laboratories - Radiochemistry

Client Lot ID: F5B160118
Matrix: WATER

Parameter	Result	Qual	Total Uncert. (2 σ+/-)	MDC	Prep Date	Analysis Date	Lab Sample ID Batch #	Yld %
Iso THORIUM (SHORT CT) NAS & DOE MOD			pCi/L	3004/RP-725			F5B160000-424B	
Thorium 228	0.0	U	0.0	0.4	02/16/05	02/17/05	5047424	71
Thorium 230	0.25	J	0.19	0.20	02/16/05	02/17/05	5047424	71
Thorium 232	0.07	U	0.11	0.15	02/16/05	02/17/05	5047424	71
Gamma Cs-137 & Hits by DOE GA-01-R MOD.			pCi/L	GA-01-R MOD			F5B160000-291B	
Actinium 228	7	U	25	49	02/16/05	02/17/05	5047291	
Bismuth 212	-17	U	40	72	02/16/05	02/17/05	5047291	
Bismuth 214	1	U	15	30	02/16/05	02/17/05	5047291	
Lead 212	-3.8	U	9.6	17	02/16/05	02/17/05	5047291	
Lead 214	-4	U	13	25	02/16/05	02/17/05	5047291	
Protactinium 234M	130	U	900	1700	02/16/05	02/17/05	5047291	
Radium (226)	1	U	15	30	02/16/05	02/17/05	5047291	
Radium 228	8	U	24	49	02/16/05	02/17/05	5047291	
Thallium 208	7.2	U	7.4	16	02/16/05	02/17/05	5047291	
Thorium 232	8	U	24	49	02/16/05	02/17/05	5047291	
Thorium 234	-4	U	90	170	02/16/05	02/17/05	5047291	
Uranium 235	28	U	68	130	02/16/05	02/17/05	5047291	
Uranium 238	-4	U	90	170	02/16/05	02/17/05	5047291	
Iso URANIUM (SHORT CT) NAS & DOE MOD			pCi/L	3050/RP-725			F5B160000-427B	
Uranium 234	0.011	U	0.047	0.10	02/16/05	02/18/05	5047427	93
Uranium 235	0.0	U	0.0	0.07	02/16/05	02/18/05	5047427	93
Uranium 238	0.0	U	0.0	0.09	02/16/05	02/18/05	5047427	93

NOTE(S)

Data are incomplete without the case narrative.

MDC is determined using instrument performance only
Bold results are greater than the MDC

J Result is greater than sample detection limit but less than stated reporting limit.
U Result is less than the sample detection limit.

DUPLICATE EVALUATION REPORT

Severn Trent Laboratories - Radiochemistry

Client Lot ID: F5B160118 Date Sampled: 02/15/05
Matrix: WATER Date Received: 02/16/05

Parameter	SAMPLE Result		Total Uncert. (2σ+/-)	% Yld	DUPLICATE Result		Total Uncert. (2σ+/-)	% Yld	QC Sample ID Precision	
Gamma Cs-137 & Hits by DOE GA-01-R MOD.				pCi/L	GA-01-R MOD				F5B160118-001	
Actinium 228	12	U	25		28	U	27		81	%RPD
Bismuth 212	28	U	49		-16	U	56		713	%RPD
Bismuth 214	3	U	13		-8	U	14		-415	%RPD
Lead 212	7	U	11		4.8	U	9.5		43	%RPD
Lead 214	3	U	14		-0.6	U	12		324	%RPD
Protactinium 234M	-450	U	800		-90	U	970		-131	%RPD
Radium (226)	3	U	13		-8	U	14		-416	%RPD
Radium 228	13	U	25		30	U	26		80	%RPD
Thallium 208	4.6	U	7.0		1	U	7.6		131	%RPD
Thorium 232	13	U	25		30	U	26		80	%RPD
Thorium 234	-10	U	95		8	U	93		-2,12	%RPD
Uranium 235	-37	U	79		32	U	73		-2,85	%RPD
Uranium 238	-10	U	95		9	U	93		-2,38	%RPD
	Batch #:		5047291	(Sample)	5047291		(Duplicate)			
Iso THORIUM (SHORT CT) NAS & DOE MOD				pCi/L	3004/RP-725				F5B160118-001	
Thorium 228	0.19	U	0.30	53	0.21	U	0.33	59	8	%RPD
Thorium 230	0.22	U	0.21	53	0.48	J	0.29	59	73	%RPD
Thorium 232	0.004	U	0.10	53	0.06	U	0.11	59	176	%RPD
	Batch #:		5047424	(Sample)	5047424		(Duplicate)			
Iso URANIUM (SHORT CT) NAS & DOE MOD				pCi/L	3050/RP-725				F5B160118-001	
Uranium 234	2.94		0.55	93	3.06		0.56	95	4	%RPD
Uranium 235	0.17	J	0.14	93	0.12	J	0.12	95	35	%RPD
Uranium 238	2.16		0.46	93	2.21		0.46	95	2	%RPD
	Batch #:		5047427	(Sample)	5047427		(Duplicate)			

NOTE(S)

Data are incomplete without the case narrative.
Calculations are performed before rounding to avoid round-off error in calculated results

J Result is greater than sample detection limit but less than stated reporting limit.
U Result is less than the sample detection limit.

Laboratory Control Sample Report

Severn Trent Laboratories - Radiochemistry

Client Lot ID: F5B160118
Matrix: WATER

Parameter	Spike Amount	Result	Total Uncert. (2 σ+/-)	MDC	% Yld	% Rec	Lab Sample ID / QC Control Limits
Gamma Cs-137 & Hits by DOE GA-01-R MOD.			pCi/L	GA-01-R MOD			F5B160000-291C
Americium 241	309000	332000	23000	400		108	(90 - 110)
Cesium 137	126000	132000	11000	200		105	(90 - 110)
Cobalt 60	223000	231000	13000	300		104	(90 - 110)
	Batch #:	5047291		Analysis Date:	02/17/05		
Iso THORIUM (SHORT CT) NAS & DOE MOD			pCi/L	3004/RP-725			F5B160000-424C
Thorium 228	10.1	12.4	1.5	0.3	88	123	(85 - 125)
Thorium 230	8.20	8.3	1.1	0.2	88	102	(74 - 130)
Thorium 232	10.1	12.4	1.5	0.2	88	122	(81 - 124)
	Batch #:	5047424		Analysis Date:	02/17/05		
Iso URANIUM (SHORT CT) NAS & DOE MOD			pCi/L	3050/RP-725			F5B160000-427C
Uranium 234	10.7	9.8	1.3	0.05	90	92	(73 - 115)
Uranium 238	10.7	11.2	1.4	0.05	90	105	(70 - 130)
	Batch #:	5047427		Analysis Date:	02/18/05		

NOTE(S)

MDC is determined by instrument performance only
Calculations are performed before rounding to avoid round-off error in calculated results

GTEOSI

140 CANTIAGUE ROCK ROAD
HICKSVILLE, NY 11801-1127

TELEPHONE: 516-932-9157
FAX: 516-932-9150

TELECOPY COVERSHEET

TO: MIKE HOLLANDER

FROM: LESTER GRYSKIEWICZ

DATE: 2/22/05

FAX NO: (631) 244-2951

Comments:

HI MIKE,

AS PER OUR TELEPHONE CONVERSATION, COPY OF OUR BAKER TANK ANALYTICAL DATA....

Pages: 52, including this coversheet

Please print or type
(Form designed for use on elite (12-pitch) typewriter.)

NON-HAZARDOUS WASTE MANIFEST

1. Generator's US EPA ID No. N.Y.D.002036515
Manifest Doc. No. 2031 2
2. Page 1 of 1
R.E.S

16648 - 4/9/17

GENERATOR

3. Generator's Name and Mailing Address
GTE OPERATIONS SUPPORT INC.
140 CANYLAGUE ROCK ROAD
HICKSVILLE, N.Y. 11801

4. Generator's Phone (516) 932-9157

5. Transporter 1 Company Name: AUCHTER INDUSTRIAL VAC SERVICE INC.
6. US EPA ID Number: N.J.D.980.772.768
A. Transporter's Phone: 908-862-2277

7. Transporter 2 Company Name
8. US EPA ID Number
B. Transporter's Phone

9. Designated Facility Name and Site Address
CASIE DOUGLAS OIL SALVAGE INC. T/A CASIE PROTANK
3209 N. MILL ROAD
VINELAND, N.J. 08322
10. US EPA ID Number: NJD045995693
C. Facility's Phone: 856-696-4401

11. Waste Shipping Name and Description	12. Containers No.	Type	13. Total Quantity	14. Unit Wt/Vol
a. NON HAZARDOUS MATERIAL (SPENT CARBON) NON DOT REGULATED (ID72)	001	C.M	20.020	YD
b.				
c.				
d.				

D. Additional Descriptions for Materials Listed Above

E. Handling Codes for Wastes Listed Above

15. Special Handling Instructions and Additional Information
APPROVAL # 7381-M
24 HOUR EMERGENCY RESPONSE # 609-685-2156 G. CALL

16. **GENERATOR'S CERTIFICATION:** I certify the materials described above on this manifest are not subject to federal regulations for reporting proper disposal of Hazardous Waste.
Printed/Typed Name: D. OWEN
Signature
Month Day Year: 3 28 05

TRANSPORTER

17. Transporter 1 Acknowledgement of Receipt of Materials
Printed/Typed Name: P. SNIFFEN
Signature
Month Day Year: 3 28 05

18. Transporter 2 Acknowledgement of Receipt of Materials
Printed/Typed Name
Signature
Month Day Year

FACILITY

19. Discrepancy Indication Space

20. Facility Owner or Operator: Certification of receipt of waste materials covered by this manifest except as noted in Item 19.
Printed/Typed Name
Signature
Month Day Year

Printed by J. J. KELLER & ASSOCIATES, INC.
Neenah, WI 54957-0368

GENERATOR'S COPY

Please print or type
(Form designed for use on elite (12-pitch) typewriter.)

NON-HAZARDOUS WASTE MANIFEST

1. Generator's US EPA ID No. N.Y.D.0.0.2.0.3.6.5.1.5
Manifest Doc. No. 2.0.3.1.0
2. Page 1 of 1

NJ DEP # 16648-49419

3. Generator's Name and Mailing Address
GTE OPERATIONS SUPPORT, INC.
140 CANYLAGUE ROCK ROAD
HICKSVILLE, NY 11801

4. Generator's Phone (516) 932-9157

5. Transporter 1 Company Name
AUCHTER INDUSTRIAL VAC SERVICE, INC
6. US EPA ID Number N.J.D.9.8.0.7.7.2.7.6.8
A. Transporter's Phone 908-862-2277

7. Transporter 2 Company Name
8. US EPA ID Number
B. Transporter's Phone

9. Designated Facility Name and Site Address
CASIE ECOLOGY OIL SALVAGE, INC. T/A/CASIE PROTANK
3209 N. MILL ROAD
VINELAND, NJ 08322
10. US EPA ID Number N.J.D.0.4.5.9.9.6.9.9.3
C. Facility's Phone 856-696-4401

11. Waste Shipping Name and Description	12. Containers No.	Type	13. Total Quantity	14. Unit Wt/Vol
a. NON HAZARDOUS MATERIAL (SPENT CARBON) NON DOT REGULATED (ID 27)	001	CM	20	Y
b.				
c.				
d.				

D. Additional Descriptions for Materials Listed Above

E. Handling Codes for Wastes Listed Above

15. Special Handling Instructions and Additional Information
APPROVAL #7381-M
24 HOUR EMERGENCY RESPONSE # 609-685-2156 G.CALL

16. **GENERATOR'S CERTIFICATION:** I certify the materials described above on this manifest are not subject to federal regulations for reporting proper disposal of Hazardous Waste.

Printed/Typed Name: R.G. Brunk Sr. Cross
Signature
Month Day Year: 3 24 05

17. Transporter 1 Acknowledgement of Receipt of Materials

Printed/Typed Name: P. SNIFFEN
Signature
Month Day Year: 3 24 05

18. Transporter 2 Acknowledgement of Receipt of Materials

Printed/Typed Name
Signature
Month Day Year

19. Discrepancy Indication Space

20. Facility Owner or Operator: Certification of receipt of waste materials covered by this manifest except as noted in Item 19.

Printed/Typed Name
Signature
Month Day Year

GENERATOR
TRANSPORTER
FACILITY

Printed by J. J. KELLER & ASSOCIATES, INC.
Neenah, WI 54957-0368

GENERATOR'S COPY

Please print or type
(Form designed for use on elite (12-pitch) typewriter.)

NON-HAZARDOUS WASTE MANIFEST

1. Generator's US EPA ID No. N.Y.D.0.0.2.0.3.6.5.1.5
Manifest Doc. No. 2.0.3.1.3
2. Page 1 of 1

AE 876 X can# 32
Dec: 16648/49429

3. Generator's Name and Mailing Address
GTE OPERATIONS SUPPORT INC.
140 CANYLAGUE ROCK ROAD
HICKSVILLE, N.Y. 11801

4. Generator's Phone (516) 932-9157

5. Transporter 1 Company Name
AUCHTER INDUSTRIAL VAC SERVICE INC.
6. US EPA ID Number N.J.D.9.8.0.7.7.2.7.6.8
A. Transporter's Phone 908-862-2277

7. Transporter 2 Company Name
8. US EPA ID Number
B. Transporter's Phone

9. Designated Facility Name and Site Address
CASIE ECOLOGY OIL SALVAGE INC.T/ACASIE PROTANK
3209 N.MILL ROAD
VINELAND, N.J 08322
10. US EPA ID Number N.J.D.0.4.5.9.9.5.6.9.3
C. Facility's Phone 856-696-4401

11. Waste Shipping Name and Description	12. Containers No.	Type	13. Total Quantity	14. Unit Wt/Vol
a. NON HAZARDOUS MATERIAL(SPENT CARBON) NON DOT REGULATED (ID72)	X.X.1	C.M	X.X.Y.2.0	YD
b.				
c.				
d.				

D. Additional Descriptions for Materials Listed Above
APPROVAL# 7381-M
24 HOUR EMERGENCY RESPONSE # 609-685-2156 G.CALL

E. Handling Codes for Wastes Listed Above

15. Special Handling Instructions and Additional Information

16. **GENERATOR'S CERTIFICATION:** I certify the materials described above on this manifest are not subject to federal regulations for reporting proper disposal of Hazardous Waste.

Printed/Typed Name: D OWEN
Signature:
Month 03 Day 28 Year 05

17. Transporter 1 Acknowledgement of Receipt of Materials

Printed/Typed Name: TED SMAKOLSKI
Signature: Ted S
Month 03 Day 28 Year 05

18. Transporter 2 Acknowledgement of Receipt of Materials

Printed/Typed Name
Signature
Month Day Year

19. Discrepancy Indication Space

20. Facility Owner or Operator: Certification of receipt of waste materials covered by this manifest except as noted in Item 19.

Printed/Typed Name
Signature
Month Day Year

GENERATOR
TRANSPORTER
FACILITY

Printed by J. J. KELLER & ASSOCIATES, INC.
Neenah, WI 54957-0368

GENERATOR'S COPY

Please print or type.
(Form designed for use on elite (12 pitch) typewriter.)

NON-HAZARDOUS WASTE MANIFEST

1. Generator's US EPA ID No. N.Y.D.00 2 0 3 6 5 1 5
Manifest Doc. No. 2.0.3.1.1
2. Page 1 of 1

R.E.S

16648 - 49417

GENERATOR

3. Generator's Name and Mailing Address
GTE OPERATIONS SUPPORT INC.
140 CANYLAGUE ROCK ROAD
HICKSVILLE, N.Y. 11801

4. Generator's Phone (516) 932-9157

5. Transporter 1 Company Name
AUCHTER INDUSTRIAL VAC SERVICE INC.

6. US EPA ID Number
N.J.D.9.8.0.7.7.2.7.6.8

A. Transporter's Phone
908-862-2277

7. Transporter 2 Company Name

8. US EPA ID Number

B. Transporter's Phone

9. Designated Facility Name and Site Address
CASTE ECOLOGY OIL SALVAGE INC.T/ACASTE PROTANK
3209 N. MILL ROAD
VINELAND, N.J. 08322

10. US EPA ID Number
N J D 0 4 5 9 9 5 6 9 3

C. Facility's Phone
856-696-4401

11. Waste Shipping Name and Description	12. Containers No.	Type	13. Total Quantity	14. Unit Wt/Vol
a. NON HAZARDOUS MATERIAL (SPENT CARBON) NON DOT REGULATED (ID72)	001	C.M	20.020	YD
b.				
c.				
d.				

D. Additional Descriptions for Materials Listed Above

E. Handling Codes for Wastes Listed Above

15. Special Handling Instructions and Additional Information
APPROVAL # 7381-M
24 HOUR EMERGENCY RESPONSE # 609-685-2156 G. CALL

TRANSPORTER

16. **GENERATOR'S CERTIFICATION:** I certify the materials described above on this manifest are not subject to federal regulations for reporting proper disposal of Hazardous Waste.

Printed/Typed Name D. OWEN | Signature | Month Day Year 32805

17. Transporter 1 Acknowledgement of Receipt of Materials

Printed/Typed Name P. SNIFFEN | Signature | Month Day Year 32805

18. Transporter 2 Acknowledgement of Receipt of Materials

Printed/Typed Name | Signature | Month Day Year

FACILITY

19. Discrepancy Indication Space

20. Facility Owner or Operator: Certification of receipt of waste materials covered by this manifest except as noted in Item 19.

Printed/Typed Name | Signature | Month Day Year

Printed by J. J. KELLER & ASSOCIATES, INC.
Neenah, WI 54957-0368

GENERATOR'S COPY

12-BLS-C5 Rev. 12/98

Please print or type
(Form designed for use on elite (12 pitch) typewriter)

NON-HAZARDOUS WASTE MANIFEST

1. Generator's US EPA ID No.: N.Y.D.0.0.2.0.3.6.5.1.5
Manifest Doc. No.: 2.0.3.1.0
2. Page 1 of 1

NJ DEP # 16618-49419

3. Generator's Name and Mailing Address
GTE OPERATIONS SUPPORT, INC.
140 CANYLAGUE ROCK ROAD
HICKSVILLE, NY 11801

4. Generator's Phone (516) 932-9157

5. Transporter 1 Company Name: AUCHTER INDUSTRIAL VAC SERVICE, INC
6. US EPA ID Number: N.J.D.9.8.0.7.7.2.7.6.8
A. Transporter's Phone: 908-862-2277

7. Transporter 2 Company Name
8. US EPA ID Number
B. Transporter's Phone

9. Designated Facility Name and Site Address
CASIE ECOLOGY OIL SALVAGE, INC. T/A/CASIE PROTANK
3209 N. MILL ROAD
VINELAND, NJ 08322
10. US EPA ID Number: N.J.D.0.4.5.9.9.6.0.9.3
C. Facility's Phone: 856-696-4401

11. Waste Shipping Name and Description	12. Containers No.	Type	13. Total Quantity	14. Unit Wt/Vol
a. NON HAZARDOUS MATERIAL (SPENT CARBON) NON DOT REGULATED (ID 27)	001	CM	20	Y
b.				
c.				
d.				

D. Additional Descriptions for Materials Listed Above

E. Handling Codes for Wastes Listed Above

15. Special Handling Instructions and Additional Information
APPROVAL #7381-M
24 HOUR EMERGENCY RESPONSE # 609-685-2156 G.CALL

16. **GENERATOR'S CERTIFICATION:** I certify the materials described above on this manifest are not subject to federal regulations for reporting proper disposal of Hazardous Waste.
Printed/Typed Name: R. L. Bathwick for GTE OSS
Signature
Month Day Year: 3 24 05

17. Transporter 1 Acknowledgement of Receipt of Materials
Printed/Typed Name: SNIFFEN
Signature
Month Day Year: 3 24 05

18. Transporter 2 Acknowledgement of Receipt of Materials
Printed/Typed Name
Signature
Month Day Year

19. Discrepancy Indication Space

20. Facility Owner or Operator: Certification of receipt of waste materials covered by this manifest except as noted in Item 19.
Printed/Typed Name
Signature
Month Day Year

GENERATOR
TRANSPORTER
FACILITY

Printed by J. J. KELLER & ASSOCIATES, INC.
Neenah, WI 54957-0368

GENERATOR'S COPY

12-BLS-C5 Rev. 12/98

Please print or type
(Form designed for use on elite (12 pitch) typewriter.)

NON-HAZARDOUS WASTE MANIFEST

1. Generator's US EPA ID No.: N.Y.D.0.0.2.0.3.6.5.1.5
Manifest Doc. No.: 2.0.3.1.3
2. Page 1 of 1

AE 876 x can # B2
Dec: 16648/49429

GENERATOR

3. Generator's Name and Mailing Address
GTE OPERATIONS SUPPORT INC.
140 CANYLAGUE ROCK ROAD
HICKSVILLE,N.Y. 11801

4. Generator's Phone (516) 932-9157

5. Transporter 1 Company Name: AUCHTER INDUSTRIAL VAC SERVICE INC.
6. US EPA ID Number: N.J.D.9.8.0.7.7.2.7.6.8
A. Transporter's Phone: 908-862-2277

7. Transporter 2 Company Name
8. US EPA ID Number
B. Transporter's Phone

9. Designated Facility Name and Site Address
CASIE ECOLOGY OIL SALVAGE INC.T/ACASIE PROTANK
3209 N.MILL ROAD
VINELAND,N.J 08322
10. US EPA ID Number: N.J.D.0.4.5.9.9.5.6.9.3
C. Facility's Phone: 856-696-4401

11. Waste Shipping Name and Description	12. Containers No.	12. Containers Type	13. Total Quantity	14. Unit Wt/Vol
a. NON HAZARDOUS MATERIAL(SPENT CARBON) NON DOT REGULATED (ID72)	X X 1	C.M	X X X 2.0	YD
b.				
c.				
d.				

D. Additional Descriptions for Materials Listed Above
APPROVAL# 7381-M
24 HOUR EMERGENCY RESPONSE # 609-685-2156 G.CALL

E. Handling Codes for Wastes Listed Above

15. Special Handling Instructions and Additional Information

16. **GENERATOR'S CERTIFICATION:** I certify the materials described above on this manifest are not subject to federal regulations for reporting proper disposal of Hazardous Waste.
Printed/Typed Name: D. OWEN
Signature:
Month 03 Day 28 Year 05

TRANSPORTER

17. Transporter 1 Acknowledgement of Receipt of Materials
Printed/Typed Name: TED SMAKOLSKI
Signature:
Month 03 Day 28 Year 05

18. Transporter 2 Acknowledgement of Receipt of Materials
Printed/Typed Name
Signature
Month Day Year

FACILITY

19. Discrepancy Indication Space

20. Facility Owner or Operator: Certification of receipt of waste materials covered by this manifest except as noted in Item 19.
Printed/Typed Name
Signature
Month Day Year

Printed by J. J. KELLER & ASSOCIATES, INC.
Neenah, WI 54957-0368

GENERATOR'S COPY

12-BLS-C5 Rev. 12/98

NON-HAZARDOUS WASTE MANIFEST

Please print or type (Form designed for use on elite (12 pitch) typewriter)

NON-HAZARDOUS WASTE

NON-HAZARDOUS WASTE MANIFEST

1. Generator's US EPA ID No.: Not Required

Manifest Document No.: 8150-A

2. Page 1 of 1

3. Generator's Name and Mailing Address: GTE Operations Support Incorporated
MREGE75
600 Hidden Ridge Road
Irvington, TX 75038

4. Generator's Phone (972) 718-4806

100 Prospect Ave.
Site: Westbury, NY 11590

5. Transporter 1 Company Name: Maynee Express, Inc.

6. US EPA ID Number: NJD986607380

A. State Transporter's ID: NJDEP 1662

B. Transporter 1 Phone: 732-424-0441

7. Transporter 2 Company Name:

8. US EPA ID Number:

C. State Transporter's ID:

D. Transporter 2 Phone:

9. Designated Facility Name and Site Address: MXI Environmental, Inc.
26319 Old Trail Road
Abington, VA 24210

10. US EPA ID Number: VAR000008573

E. State Facility's ID:

F. Facility's Phone: 540-628-1156

GENERATOR

11. WASTE DESCRIPTION	12. Containers No.	Type	13. Total Quantity	14. Unit Wt./Vol.
a. Non Regulated Sludge, (1072) DOT Non Regulated &, RCRA Non Hazardous	4	DM	2	G
b.				
c.				
d.				

G. Additional Descriptions for Materials Listed Above

H. Handling Codes for Wastes Listed Above

15. Special Handling Instructions and Additional Information
GTEONY001-SI
24 Hour Emergency # 732-613-1660
Plate # _____ Decal # _____
AMI P.O. Box # 8150-UA

16. GENERATOR'S CERTIFICATION: I hereby certify that the contents of this shipment are fully and accurately described and are in all respects in proper condition for transport. The materials described on this manifest are not subject to federal hazardous waste regulations.

Printed/Typed Name | Signature | Date: Month Day Year

TRANSPORTER

17. Transporter 1 Acknowledgement of Receipt of Materials

Printed/Typed Name | Signature | Date: Month Day Year

18. Transporter 2 Acknowledgement of Receipt of Materials

Printed/Typed Name | Signature | Date: Month Day Year

FACILITY

19. Discrepancy Indication Space

20. Facility Owner or Operator; Certification of receipt of the waste materials covered by this manifest, except as noted in item 19.

Printed/Typed Name | Signature | Date: Month Day Year

NON-HAZARDOUS WASTE MANIFEST

Please ... (Form designed for use on elite (12 pitch) typewriter)

NON-HAZARDOUS WASTE MANIFEST

1. Generator's US EPA ID No.: Not Required

Manifest Document No.: 0150-B

2. Page 1 of 1

3. Generator's Name and Mailing Address: GTE Operations Support Incorporated
MC03E75
600 Hidden Ridge Road
Irving, TX 75038

4. Generator's Phone (972) 718-4646

100 Prospect Avenue
Site: Westbury, NY 11590

5. Transporter 1 Company Name: Maynee Express, Inc.

6. US EPA ID Number: NJD986607350

A. State Transporter's ID: NJDEP 10582

B. Transporter 1 Phone: 732-424-6441

7. Transporter 2 Company Name:

8. US EPA ID Number:

C. State Transporter's ID:

D. Transporter 2 Phone:

9. Designated Facility Name and Site Address: NXI Environmental, Inc.
26319 Old Trail Road
Abington, VA, 24210

10. US EPA ID Number: VAR000008573

E. State Facility's ID:

F. Facility's Phone: 540-623-1156

GENERATOR

11. WASTE DESCRIPTION	12. Containers No.	Type	13. Total Quantity	14. Unit Wt./Vol.
a. Non Regulated Sludge, (ID72) DOT Non Regulated, RCRA Non Hazardous	1	CY	17000	P
b.				
c.				
d.				

G. Additional Descriptions for Materials Listed Above

H. Handling Codes for Wastes Listed Above

15. Special Handling Instructions and Additional Information
GTEUNY-001-ST
24 Hour Emergency # 732-613-1660
Plate # [illegible] Decal # 02550
AMT P.O. # 8150-08

16. GENERATOR'S CERTIFICATION: I hereby certify that the contents of this shipment are fully and accurately described and are in all respects in proper condition for transport. The materials described on this manifest are not subject to federal hazardous waste regulations.

Printed/Typed Name: [illegible] Signature: [illegible] Date: Month Day Year

TRANSPORTER

17. Transporter 1 Acknowledgement of Receipt of Materials

Printed/Typed Name: Ralph Guzman Signature: [illegible] Date: Month 03 Day 21 Year 03

18. Transporter 2 Acknowledgement of Receipt of Materials

Printed/Typed Name: Signature: Date: Month Day Year

FACILITY

19. Discrepancy Indication Space

20. Facility Owner or Operator; Certification of receipt of the waste materials covered by this manifest, except as noted in item 19.

Printed/Typed Name: Signature: Date: Month Day Year

NON-HAZARDOUS WASTE

AWT ENVIRONMENTAL SERVICES, INC.

Remediation • Abatement • Waste Management

JOB # 8150 PAGE ____ of ____

CUSTOMER GTE OSI

DATE 10-24-03

JOB LOCATION 1100 Prospect Ave

PROJECT DESCRIPTION/PHASE

EQUIPMENT

Description	EQ. #	Units
Pick-up	118	1
forklift	Hertz	1

MATERIALS

Description	Units

LABOR Site time 730 - 12:00

Name	Title	ST/Fin	HRS
Anthony D		5:30/	
		/	
		/	
		/	
		/	
		/	
		/	
		/	
		/	
		/	

MISCELLANEOUS

COMMENT(S)

CUSTOMER REP. [signature] AWT REP. [signature]

5093

NON-HAZARDOUS WASTE MANIFEST

Please print or type (Form designed for use on elite (12 pitch) typewriter)

NON-HAZARDOUS WASTE MANIFEST

1. Generator's US EPA ID No.: Not Required

Manifest Document No.: 8150-7

2. Page 1 of 1

3. Generator's Name and Mailing Address: GTE Operations Support Incorporated
HQE03E75
600 Hidden Ridge Road
Irving, TX 75038

4. Generator's Phone (972) 718-4806

110 Prospect Ave.
Site: Westbury, NY 11590

5. Transporter 1 Company Name: Dawson Express, Inc.

6. US EPA ID Number: NJD986607380

A. State Transporter's ID: NJDEP 18682

B. Transporter 1 Phone: 732-424-8441

7. Transporter 2 Company Name

8. US EPA ID Number

C. State Transporter's ID

D. Transporter 2 Phone

9. Designated Facility Name and Site Address: MXI Environmental, Inc.
26319 Old Trail Road
Abington, VA 24210

10. US EPA ID Number: VAR000008573

E. State Facility's ID

F. Facility's Phone: 540 628-1156

11. WASTE DESCRIPTION	12. Containers No.	12. Containers Type	13. Total Quantity	14. Unit Wt./Vol.
a. Non Regulated Sludge (ID72) DOT Non Regulated, RCRA Non Hazardous	70	DM	3740	G
b.				
c.				
d.				

G. Additional Descriptions for Materials Listed Above

Water 10-80%, Soil 90-10%, L

67 x 55 gal - 3 x 85 gal (over Packs)

H. Handling Codes for Wastes Listed Above

15. Special Handling Instructions and Additional Information

GTEDNY-001-ST
24 hour Emergency # 732-613-1660
Plate #T59-H42 Decal # 02620
MXI P.O. # 8150-0A

16. GENERATOR'S CERTIFICATION: I hereby certify that the contents of this shipment are fully and accurately described and are in all respects in proper condition for transport. The materials described on this manifest are not subject to federal hazardous waste regulations.

Printed/Typed Name: [illegible] | Signature | Date: Month 10 Day 24 Year 03

17. Transporter 1 Acknowledgement of Receipt of Materials

Printed/Typed Name: Glenn W Frank | Signature | Date: Month 10 Day 24 Year 03

18. Transporter 2 Acknowledgement of Receipt of Materials

Printed/Typed Name | Signature | Date: Month Day Year

19. Discrepancy Indication Space

20. Facility Owner or Operator; Certification of receipt of the waste materials covered by this manifest, except as noted in item 19.

Printed/Typed Name | Signature | Date: Month Day Year

NON-HAZARDOUS WASTE — GENERATOR — TRANSPORTER — FACILITY

NON-HAZARDOUS WASTE MANIFEST

Please print or type (Form designed for use on elite (12 pitch) typewriter)

NON-HAZARDOUS WASTE MANIFEST

1. Generator's US EPA ID No.: Not Required

Manifest Document No.: 8150-8

2. Page 1 of 1

3. Generator's Name and Mailing Address: GTE Operations Support Incorporated
HQE03E75
600 Hidden Ridge Road
Irving, TX 75038

4. Generator's Phone (972) 718-4006

100 Prospect Ave.
Site: Westbury, NY 11590

5. Transporter 1 Company Name: Maurice Express, Inc.

6. US EPA ID Number: NJD986607380

A. State Transporter's ID: NJDEP 18562

B. Transporter 1 Phone: 732-424-5441

7. Transporter 2 Company Name:

8. US EPA ID Number:

C. State Transporter's ID:

D. Transporter 2 Phone:

9. Designated Facility Name and Site Address: MXI Environmental, Inc.
26319 Old Trail Road
Abington, VA 24210

10. US EPA ID Number: VAR000008573
NJ999999999

E. State Facility's ID:

F. Facility's Phone: 540-628-1156

GENERATOR

11. WASTE DESCRIPTION	12. Containers No.	Type	13. Total Quantity	14. Unit Wt./Vol.
a. Non Regulated Sludge (ID72) DOT Non Regulated, RCRA Non Hazardous	10	DM	3850	G
b.				
c.				
d.				

G. Additional Descriptions for Materials Listed Above: Water 10-90%, Soil 90-10%, L

H. Handling Codes for Wastes Listed Above:

15. Special Handling Instructions and Additional Information
GTEONY-001-ST
24 Hour Emergency # 732-613-1660
Plate #T439YX NJ Decal # 082849
MXI P.O. # 8150-8A

NON-HAZARDOUS WASTE

16. **GENERATOR'S CERTIFICATION:** I hereby certify that the contents of this shipment are fully and accurately described and are in all respects in proper condition for transport. The materials described on this manifest are not subject to federal hazardous waste regulations.

Printed/Typed Name: [illegible] Signature: [signature] Date: Month Day Year

TRANSPORTER

17. Transporter 1 Acknowledgement of Receipt of Materials

Printed/Typed Name: RAUL GUZMAN Signature: Raul Guzman Date: Month 10 Day 24 Year 03

18. Transporter 2 Acknowledgement of Receipt of Materials

Printed/Typed Name: Signature: Date: Month Day Year

FACILITY

19. Discrepancy Indication Space

20. Facility Owner or Operator; Certification of receipt of the waste materials covered by this manifest, except as noted in item 19.

Printed/Typed Name: Signature: Date: Month Day Year

NON-HAZARDOUS WASTE MANIFEST

Please print or type (Form designed for use on elite (12 pitch) typewriter)

NON-HAZARDOUS WASTE MANIFEST

1. Generator's US EPA ID No.: Not Required

Manifest Document No.: 8150-9

2. Page 1 of 1

3. Generator's Name and Mailing Address: GTE Operations Support Incorporated
HQE03E75
600 Hidden Ridge Road
Irvington, TX 75038

100 Prospect Ave.
Site: Westbury, NY 11590

4. Generator's Phone (972) 718-4806

5. Transporter 1 Company Name: Maurice Expresss, Inc.

6. US EPA ID Number: N J 0 9 8 6 6 0 7 3 8 0

A. State Transporter's ID: NJDEP 1662

B. Transporter 1 Phone: 732-424-0441

7. Transporter 2 Company Name:

8. US EPA ID Number:

C. State Transporter's ID:

D. Transporter 2 Phone:

9. Designated Facility Name and Site Address: MXI Environmental, Inc.
26319 Old Trail Road
Abington, VA 24210

10. US EPA ID Number: V A R 0 0 0 0 0 8 5 7 3

E. State Facility's ID:

F. Facility's Phone: 540-628-1156

11. WASTE DESCRIPTION	12. Containers No.	Type	13. Total Quantity	14. Unit Wt./Vol.
a. Non Regulated Sludge, (1072) DOT Non Regulated, RCRA Non Hazardous	10	DM	3850	G
b.				
c.				
d.				

GENERATOR

G. Additional Descriptions for Materials Listed Above
GTEONY-001-ST
24 Hour Emergency # 732-613-1660
Plate # TL2-289 Decal # 082852

ATN P.O. # 8150-0A

H. Handling Codes for Wastes Listed Above

15. Special Handling Instructions and Additional Information

NON-HAZARDOUS WASTE

16. GENERATOR'S CERTIFICATION: I hereby certify that the contents of this shipment are fully and accurately described and are in all respects in proper condition for transport. The materials described on this manifest are not subject to federal hazardous waste regulations.

Printed/Typed Name: [illegible] | Signature: [signature] | Date: Month 10 Day 24 Year 03

TRANSPORTER

17. Transporter 1 Acknowledgement of Receipt of Materials

Printed/Typed Name: EFRAIN SANCHEZ | Signature: [signature] | Date: Month 10 Day 24 Year 03

18. Transporter 2 Acknowledgement of Receipt of Materials

Printed/Typed Name: | Signature: | Date: Month Day Year

FACILITY

19. Discrepancy Indication Space

20. Facility Owner or Operator; Certification of receipt of the waste materials covered by this manifest, except as noted in item 19.

Printed/Typed Name: | Signature: | Date: Month Day Year

AWT ENVIRONMENTAL SERVICES, INC.

Remediation • Abatement • Waste Management

JOB # 8150 PAGE ____ of ____

CUSTOMER GTE / OST

DATE Dec 10 2003

JOB LOCATION Long Island

PROJECT DESCRIPTION/PHASE Loaded out Drums

EQUIPMENT

Description	EQ. #	Units
Pick up	118	1
front loader		1

MATERIALS

Description	Units
shovel	1

LABOR OST 8-2

Name	Title	ST/Fin	HRS
A. Pizzichillo		[illegible]	[illegible]
		5:00	
		/	
		/	
		/	
		/	
		/	
		/	
		/	
		/	

MISCELLANEOUS

COMMENT(S) ____

CUSTOMER REP. [signature] AWT REP. [signature]

NON-HAZARDOUS WASTE MANIFEST

Please print or type (Form designed for use on elite (12 pitch) typewriter)

NON-HAZARDOUS WASTE MANIFEST

1. Generator's US EPA ID No.: Not required

Manifest Document No.: 8150-A

2. Page 1 of 1

3. Generator's Name and Mailing Address: GTE Operations Support Incorporated
HQE03E75
600 Hidden Ridge Road
Irving TX 75038

4. Generator's Phone (972 718-4800

110 Prospect Ave.
Site: Westbury, NY 11590

5. Transporter 1 Company Name: Maurice Express, Inc.

6. US EPA ID Number: NJD986607380

A. State Transporter's ID: NJDEP 1682 *

B. Transporter 1 Phone: 732-424-5441

7. Transporter 2 Company Name:

8. US EPA ID Number:

C. State Transporter's ID:

D. Transporter 2 Phone:

9. Designated Facility Name and Site Address: MXI Environmental, Inc.
26319 Old Trail Road
Abington, VA 24210

10. US EPA ID Number: VAR000008573

E. State Facility's ID:

F. Facility's Phone: 540-628-1156

GENERATOR

11. WASTE DESCRIPTION	12. Containers No.	Type	13. Total Quantity	14. Unit Wt./Vol.
a. Non Regulated Sludge DOT Non Regulated, RCRA Non Hazardous	70	DM	3850	G
b.				
c.				
d.				

G. Additional Descriptions for Materials Listed Above: Water 10-90%, Soil 90-10%, L

H. Handling Codes for Wastes Listed Above:

15. Special Handling Instructions and Additional Information
GTCONY-001
24 Hour Emergency # 732-613-1660
Plate # 758 WLP N.J. Decal # _____
MXI P.O. # 8150-UA

* NY NJ 334

16. GENERATOR'S CERTIFICATION: I hereby certify that the contents of this shipment are fully and accurately described and are in all respects in proper condition for transport. The materials described on this manifest are not subject to federal hazardous waste regulations.

Printed/Typed Name: [illegible] Signature: [signature] Date: Month 12 Day 15 Year 03

TRANSPORTER

17. Transporter 1 Acknowledgement of Receipt of Materials

Printed/Typed Name: Raul Guzman Signature: [signature] Date: Month 12 Day 16 Year 03

18. Transporter 2 Acknowledgement of Receipt of Materials

Printed/Typed Name: Signature: Date: Month Day Year

FACILITY

19. Discrepancy Indication Space

20. Facility Owner or Operator; Certification of receipt of the waste materials covered by this manifest, except as noted in item 19.

Printed/Typed Name: Signature: Date: Month Day Year

NON-HAZARDOUS WASTE

NON-HAZARDOUS WASTE MANIFEST

Please print or type (Form designed for use on elite (12 pitch) typewriter)

NON-HAZARDOUS WASTE MANIFEST

1. Generator's US EPA ID No.: Not Required

Manifest Document No.: 6150-8

2. Page 1 of 1

3. Generator's Name and Mailing Address: GTE Operations Support Incorporated
HQE03E75
600 Hidden Ridge Road
Irving, TX 75038

4. Generator's Phone (972) 718-4306

410 Prospect Ave.
Site: Westbury, NY 11590

5. Transporter 1 Company Name: Maumee Express, Inc.

6. US EPA ID Number: NJD986607380

A. State Transporter's ID: NJDEP 10002 *

B. Transporter 1 Phone: 732-626-8441

7. Transporter 2 Company Name:

8. US EPA ID Number:

C. State Transporter's ID:

D. Transporter 2 Phone:

9. Designated Facility Name and Site Address: MOI Environmental
26319 Old Trail Road
Abington, VA 24210

10. US EPA ID Number: VAR000008573

E. State Facility's ID:

F. Facility's Phone: 540-628-1156

GENERATOR

11. WASTE DESCRIPTION	12. Containers No.	Type	13. Total Quantity	14. Unit Wt./Vol.
a. Non Regulated Sludge (DOT Non Regulated, RCRA Non Hazardous	70	DM	3850	G
b.				
c.				
d.				

G. Additional Descriptions for Materials Listed Above: Water 10-90%, Soil 90-00%, L

H. Handling Codes for Wastes Listed Above:

15. Special Handling Instructions and Additional Information
GTELW-001
24 Hour Emergency # 732-613-1000
Plate # TL-HJZ NJ Decal #
AMI P.O. # 8150-1A

* NY NT 334

NON-HAZARDOUS WASTE

16. **GENERATOR'S CERTIFICATION:** I hereby certify that the contents of this shipment are fully and accurately described and are in all respects in proper condition for transport. The materials described on this manifest are not subject to federal hazardous waste regulations.

Printed/Typed Name: [illegible] GTE
Signature: [signature]
Date: Month 12 Day 10 Year 03

TRANSPORTER

17. Transporter 1 Acknowledgement of Receipt of Materials
Printed/Typed Name: EFRAIN SANCHEZ
Signature: [signature]
Date: Month 12 Day 10 Year 03

18. Transporter 2 Acknowledgement of Receipt of Materials
Printed/Typed Name:
Signature:
Date: Month Day Year

FACILITY

19. Discrepancy Indication Space

20. Facility Owner or Operator; Certification of receipt of the waste materials covered by this manifest, except as noted in item 19.
Printed/Typed Name:
Signature:
Date: Month Day Year

NON-HAZARDOUS WASTE MANIFEST

Please print or type (Form designed for use on elite (12 pitch) typewriter)

NON-HAZARDOUS WASTE MANIFEST

1. Generator's US EPA ID No.: Not Required

Manifest Document No.: 8150-C

2. Page 1 of 1

3. Generator's Name and Mailing Address: GTE Operations Support Incorporated
HQE03E75
600 Hidden Ridge Road
Irving, TX 75038

4. Generator's Phone (972-718-4006

110 Prospect Ave.
Site: Westbury, NY 11590

5. Transporter 1 Company Name: Maumee Express, Inc.

6. US EPA ID Number: MID 986607380

A. State Transporter's ID: NJDEP [illegible] 10682 *

B. Transporter 1 Phone: 732-424-8441

7. Transporter 2 Company Name

8. US EPA ID Number

C. State Transporter's ID

D. Transporter 2 Phone

9. Designated Facility Name and Site Address: MXI Environmental
26319 Old Trail Road
Abington, VA 24210

10. US EPA ID Number: VAR000006573

E. State Facility's ID

F. Facility's Phone: 540-628-1156

GENERATOR

11. WASTE DESCRIPTION	12. Containers No.	Type	13. Total Quantity	14. Unit Wt./Vol.
a. Non Regulated Sludge DOT Non Regulated, RCRA Non Hazardous	70	DM	2850	G
b.				
c.				
d.				

G. Additional Descriptions for Materials Listed Above: Water 10-90%, Soil 90-10%, L

H. Handling Codes for Wastes Listed Above

15. Special Handling Instructions and Additional Information
GTEONY-001
24 Hour Emergency # 732-613-1660
Plate # T40-4YX Decal # _____
A/T P.O. # 8150-OA N.J.

* NYNJ 334

16. **GENERATOR'S CERTIFICATION:** I hereby certify that the contents of this shipment are fully and accurately described and are in all respects in proper condition for transport. The materials described on this manifest are not subject to federal hazardous waste regulations.

Printed/Typed Name: [illegible] C. GTEOSI

Signature: [illegible]

Date: Month 03 Day 17 Year 03

TRANSPORTER

17. Transporter 1 Acknowledgement of Receipt of Materials

Printed/Typed Name: [illegible]

Signature: [illegible]

Date: Month [illegible] Day [illegible] Year

18. Transporter 2 Acknowledgement of Receipt of Materials

Printed/Typed Name

Signature

Date: Month Day Year

FACILITY

19. Discrepancy Indication Space

20. Facility Owner or Operator; Certification of receipt of the waste materials covered by this manifest, except as noted in item 19.

Printed/Typed Name

Signature

Date: Month Day Year

NON-HAZARDOUS WASTE

F-14 © 2002 LABELMASTER® (800) 621-5808 www.labelmaster.com

PRINTED ON RECYCLED PAPER USING SOYBEAN INK PRINTED WITH

AWT ENVIRONMENTAL SERVICES, INC.

Remediation • Abatement • Waste Management

JOB # 8150 PAGE ____ of ____

CUSTOMER GTE / OSL

DATE 2-24-04

JOB LOCATION Long Island

PROJECT DESCRIPTION/PHASE Loading off Drums

EQUIPMENT

Description	EQ. #	Units
Pick up	118	1
Front Loader		1

LABOR 8:00am - 3:15pm

Name	Title	ST/Fin	HRS
J. Pierce		530 /	
A. Prattle		530 /	
		/	
		/	
		/	
		/	
		/	
		/	
		/	
		/	

MATERIALS

Description	Units

MISCELLANEOUS

COMMENT(S) ____

CUSTOMER REP. [signature] AWT REP. [signature]

NON-HAZARDOUS WASTE MANIFEST

Please print or type (Form designed for use on elite (12 pitch) typewriter)

NON-HAZARDOUS WASTE MANIFEST

1. Generator's US EPA ID No.: Not Required

Manifest Document No.: 8150-11

2. Page 1 of 1

3. Generator's Name and Mailing Address: GTE Operations Support Incorporated
HQE03E75
600 Hidden Ridge Road
Irvington, TX 75038

4. Generator's Phone (972) 718-4306

100 Prospect Avenue
Site: Westbury, NY 11590

5. Transporter 1 Company Name: Maurice Express, Inc.

6. US EPA ID Number: NJD986607380

A. State Transporter's ID: NJDEP 1602

B. Transporter 1 Phone: 732-424-8441

7. Transporter 2 Company Name:

8. US EPA ID Number:

C. State Transporter's ID:

D. Transporter 2 Phone:

9. Designated Facility Name and Site Address: MXI Environmental, Inc.
26319 Old Trail Road
Abington, VA 24210

10. US EPA ID Number: VAK000008573

E. State Facility's ID:

F. Facility's Phone: 540-526-1156

GENERATOR

11. WASTE DESCRIPTION	12. Containers No.	Type	13. Total Quantity	14. Unit Wt./Vol.
a. Non Regulated Lodge DOT Non Regulated, RCRA Non Hazardous	76	DM	4180	G
b.				
c.				
d.				

G. Additional Descriptions for Materials Listed Above
a. Water 10-90% Soil 90-10%, L

H. Handling Codes for Wastes Listed Above

15. Special Handling Instructions and Additional Information
GTEWY-001
24 Hour Emergency # 732-613-1660
Plate # T39 N541 NJ Decal # 82980
AMI P.O. # 8150-0A

16. GENERATOR'S CERTIFICATION: I hereby certify that the contents of this shipment are fully and accurately described and are in all respects in proper condition for transport. The materials described on this manifest are not subject to federal hazardous waste regulations.

Printed/Typed Name: John Mark Le Grosse
Signature:
Date: Month Day Year

TRANSPORTER

17. Transporter 1 Acknowledgement of Receipt of Materials
Printed/Typed Name: Robert String
Signature: Robert String
Date: Month 02 Day 24 Year 04

18. Transporter 2 Acknowledgement of Receipt of Materials
Printed/Typed Name:
Signature:
Date: Month Day Year

FACILITY

19. Discrepancy Indication Space

20. Facility Owner or Operator; Certification of receipt of the waste materials covered by this manifest, except as noted in item 19.
Printed/Typed Name:
Signature:
Date: Month Day Year

NON-HAZARDOUS WASTE

NON-HAZARDOUS WASTE MANIFEST

Please print or type (Form designed for use on elite (12 pitch) typewriter)

NON-HAZARDOUS WASTE MANIFEST

1. Generator's US EPA ID No.: Not Required

Manifest Document No.: 8150-1

2. Page 1 of 1

3. Generator's Name and Mailing Address: GTE Operations Support Incorporated
HQ03E75
600 Hidden Ridge Road
Irving, TX 75038

4. Generator's Phone (972) 718-4800

100 Prospect Avenue
Site: Westbury, NY 11590

5. Transporter 1 Company Name: Maurice Express, Inc.

6. US EPA ID Number: NJD986607380

A. State Transporter's ID: NJDEP 1662

B. Transporter 1 Phone: 732-424-9441

7. Transporter 2 Company Name:

8. US EPA ID Number:

C. State Transporter's ID:

D. Transporter 2 Phone:

9. Designated Facility Name and Site Address: MXI Environmental, Inc.
26319 Old Trail Road
Abington, VA 24210

10. US EPA ID Number: VAR000008573

E. State Facility's ID:

F. Facility's Phone: 540-525-1156

11. WASTE DESCRIPTION	12. Containers No.	Type	13. Total Quantity	14. Unit Wt./Vol.
a. Non Regulated Sludge DOT Non Regulated, RCRA Non Hazardous	70	DM		G
b.				
c.				
d.				

G. Additional Descriptions for Materials Listed Above
a. Water 10-90% Soil 90-10%, L

H. Handling Codes for Wastes Listed Above

15. Special Handling Instructions and Additional Information
GTEUNY-001
24 hour Emergency # 732-613-1660
Plate # _____ Decal# _____
AWT P.O. # 8150-0A

GENERATOR

16. GENERATOR'S CERTIFICATION: I hereby certify that the contents of this shipment are fully and accurately described and are in all respects in proper condition for transport. The materials described on this manifest are not subject to federal hazardous waste regulations.

Printed/Typed Name: [illegible] Signature: [signature] Date: Month Day Year

TRANSPORTER

17. Transporter 1 Acknowledgement of Receipt of Materials

Printed/Typed Name: [illegible] Signature: [signature] Date: Month Day Year

18. Transporter 2 Acknowledgement of Receipt of Materials

Printed/Typed Name: Signature: Date: Month Day Year

FACILITY

19. Discrepancy Indication Space

20. Facility Owner or Operator; Certification of receipt of the waste materials covered by this manifest, except as noted in item 19.

Printed/Typed Name: Signature: Date: Month Day Year

NON-HAZARDOUS WASTE

NON-HAZARDOUS WASTE MANIFEST

Please print or type (Form designed for use on elite (12 pitch) typewriter)

NON-HAZARDOUS WASTE MANIFEST

1. Generator's US EPA ID No.: Not Required

Manifest Document No.: 0150-1

2. Page 1 of 1

3. Generator's Name and Mailing Address: GTE Operations Support Incorporated
HQE03E75
600 Hidden Ridge Road
Irvington TX, 75038

4. Generator's Phone (972) 718-4806

110 Prospect Avenue
Site: Westbury, NY 11590

5. Transporter 1 Company Name: Maynee Express, Inc.

6. US EPA ID Number: NJD986607380

A. State Transporter's ID: NJDEP1692

B. Transporter 1 Phone: 732-424-0441

7. Transporter 2 Company Name:

8. US EPA ID Number:

C. State Transporter's ID:

D. Transporter 2 Phone:

9. Designated Facility Name and Site Address: MXI Environmental, Inc.
26319 Old Trail Road
Abington, VA 24210

10. US EPA ID Number: VAK000008573

E. State Facility's ID:

F. Facility's Phone: 540-528-1156

GENERATOR

11. WASTE DESCRIPTION	12. Containers No.	12. Containers Type	13. Total Quantity	14. Unit Wt./Vol.
a. Non Regulated Sludge DOT Non regulated, RCRA Non Hazardous	35	DM		G
b.				
c.				
d.				

G. Additional Descriptions for Materials Listed Above
a. Water 10-90% Soil 90-10%, L

H. Handling Codes for Wastes Listed Above

15. Special Handling Instructions and Additional Information
GTEUNY-001
24 Hour Emergency # 732-613-1660
Plate # _____ Decal # _____
ANT P.O. # 8150-GA

16. GENERATOR'S CERTIFICATION: I hereby certify that the contents of this shipment are fully and accurately described and are in all respects in proper condition for transport. The materials described on this manifest are not subject to federal hazardous waste regulations.

Printed/Typed Name: [illegible] Signature: [illegible] Date: Month Day Year

TRANSPORTER

17. Transporter 1 Acknowledgement of Receipt of Materials — Printed/Typed Name — Signature — Date: Month Day Year

18. Transporter 2 Acknowledgement of Receipt of Materials — Printed/Typed Name — Signature — Date: Month Day Year

FACILITY

19. Discrepancy Indication Space

20. Facility Owner or Operator; Certification of receipt of the waste materials covered by this manifest, except as noted in item 19.

Printed/Typed Name — Signature — Date: Month Day Year

NON-HAZARDOUS WASTE

AWT ENVIRONMENTAL SERVICES, INC.

Remediation • Abatement • Waste Management

JOB # 8150 PAGE ____ of ____

CUSTOMER OTE/OSI

DATE 3/25/04

JOB LOCATION 100 Pearsall Ave
Westbury, New York

PROJECT DESCRIPTION/PHASE Load Bulged Drums into Rolloff, check rings, lids, gaskets on rest
Overpack non stackable drums

EQUIPMENT

Description	EQ. #	Units
Veh	115	1
Forklift	N/R	1
Drum Lifter	AWT	1
Rolloff	AWT	1

LABOR

Site time 0730 - 1345

Name	Title	ST/Fin	HRS
J Costo	Sup	0530 /	
T Roberts	F.T	0530 /	
		/	
		/	
		/	
		/	
		/	
		/	
		/	

MATERIALS

Description	Units
Lids	7
Rings	4
Gaskets	8
85gal overpack	12
level D PPE	2

MISCELLANEOUS

JOHN IFKOVITS
914-588-8580

COMMENT(S) 37 Drums loaded into Rolloff - 12 Drums needed to be overpacked
38 Drums of 1000 Mix loaded into Trailer 1 Drum Crushed

CUSTOMER REP. ____ AWT REP. ____

Russell Reid
RESPONSIBLE WASTEWATER MANAGEMENT

Main Office:

200 Smith Street
PO Box 130
Keasbey, NJ 08832-0130
Phone: 732-225-2238
Fax: 732-417-0367

Branch Offices:

2157 Route 31
PO Box 341
Glen Gardner, NJ 08826-0341
Phone: 908-537-2104
Fax: 908-537-7387

1770 Hurffville Road
PO Box 5690
Deptford, NJ 08096-5690
Phone: 856-227-6494
Fax: 856-227-5293

10 Logrande Court
Bohemia, NY 11716
Phone: 631-567-3122
Fax: 631-244-2951

Field Offices:

360 W. Commodore Blvd.
Suite A
Jackson, NJ 08527-5401
Phone: 732-928-2137
Fax: 732-928-8891

285 S. Shore Road
PO Box 835
Marmora, NJ 08223-0835
Phone: 609-390-1411
Fax: 609-390-2043

593 Male Road
Wind Gap, PA 18901
Phone: 610-863-1181
Fax: 610-863-6884

800-356-4468
www.russellreid.com

FAX TRANSMITTAL FORM

Date: March 16, 2005

Number of pages including cover: 2

TO:

Name: Lester Gryskiewicz
Company: GTEOSI
Fax Number: 516-932-9150

FROM:

Name: Michael Hollander
Phone Number: 516-322-9952

- ☐ Urgent
- ☐ Please Comment
- ☐ As Discussed
- ☒ For Review
- ☐ Please Reply
- ☐ As Requested

MESSAGE:

Lester,

Please find copy of dump receipts for the (2) loads that were picked up on Feb 23rd.

Let me know if you need anything.

Regards,

Michael Hollander
Account Executive

1254

DEPARTMENT OF PUBLIC WORKS
Nassau County, N.Y.
CESSPOOL WASTES DISPOSAL RECEIPT H 5414

Collector: Name Russell Reid

Address: Bohemia

Capacity of Tank in Gallons 3000

Permit No. 8 License No. Date 2-23-05

Plant Attendant Allen McCoy (SIGNATURE)

Driver (SIGNATURE)

The above form is to be made out in duplicate for each load. One copy to be given to the collector for his record, and copy for plant record.
PW-4781.Rev.2/98

1005

DEPARTMENT OF PUBLIC WORKS
Nassau County, N.Y.
CESSPOOL WASTES DISPOSAL RECEIPT H 5406

Collector: Name Russell Reid

Address: Bohemia

Capacity of Tank in Gallons 3000

Permit No. 8 License No. Date 2-23-05

Plant Attendant Allen McCoy (SIGNATURE)

Driver (SIGNATURE)

The above form is to be made out in duplicate for each load. One copy to be given to the collector for his record, and copy for plant record.
PW-4781.Rev.2/98

GTE Operations Support Incorporated
One Verizon Way
VC34W453
Basking Ridge, NJ 07920-1097
908-559-3687

January 23, 2006

Ms. Alyse Peterson
Project Manager
Radioactive Waste Policy and Nuclear Coordination
New York State Energy Research and Development Authority
17 Columbia Circle
Albany, NY 12203-6399

Subject: 2005 Low-Level Radioactive Waste Report
Voluntary Cleanup Agreement
For: Former Sylvania Electric Products Incorporated Facility
By: GTE Operations Support Incorporated
Site #: V-00089-1 Index #: W1-0903-01-12

Dear Ms. Peterson:

Enclosed is the 2005 Low-Level Radioactive Waste Report for GTE Operations Support Incorporated.

If you have any questions on the subject report, please feel free to call me on my cell at 214-724-2506.

Please note our offices have move and our new address is:
GTE Operations Support Incorporated
One Verizon Way
VC34W453
Basking Ridge, NJ
07920-1097

Sincerely,

Jean Agostinelli
Vice President and Controller

cc: John Zeh
Division of Solid and Hazardous Materials
Bureau of Hazardous Waste & Radiation Management
New York State Department of Environmental Conservation
625 Broadway
Albany, NY 12233-7255

Mr. Robert Stewart
Division of Environmental Remediation
New York State Department of Environmental Conservation
SUNY Campus Loop Bldg. 40
Stony Brook, New York 11790-2356

Jerry Riggi
Division of Solid and Hazardous Materials
Bureau of Hazardous Waste & Radiation
Management
New York State Department of
Environmental Conservation
625 Broadway
Albany, NY 12233-7255

IMPORTANT C PLEASE READ

If your facility generates LLRW that
requires disposal in a licensed LLRW disposal facility
or stores LLRW pending disposal,
you must use this complete
Low-Level Radioactive Waste Report Form.

However, if your facility manages LLRW by
DECAY IN STORAGE ONLY
(i.e., short-lived radionuclides)
you must instead use the
Condensed Form for Decay in Storage Only.

If you have any questions about
which form to complete, contact Alyse Peterson at
NYSERDA C (518) 862-1090, ext. 3274 or
llrwadmin@nyserda.org

Filing Deadline: March 1st - Annually

ABOUT THE REGULATORY AGENCIES

In general, the receipt, possession and use or processing of radioactive material, including low-level radioactive waste (LLRW), requires a radioactive material license from the appropriate New York regulatory agency or the U.S. Nuclear Regulatory Commission. Normally, a single license from a single licensing agency is all that is required for most institutions, corporations, utilities, etc. If an institution or corporation holds multiple licenses under which LLRW was generated, or if people in the organization hold individual licenses under which LLRW was generated, then all of those licenses and the respective licensing agencies must be identified. In that case, append a list of the license numbers and the licensing agencies to the Report Form. The licensing agencies and their respective jurisdictions are:

New York State Department of Labor

$ Regulates industrial radioactive material users in New York State.

New York State Department of Health

$ Regulates non-industrial radioactive material users (e.g., hospitals and universities) in New York State outside of New York City.

New York City Department of Health

$ Regulates non-industrial radioactive material users in New York City.

U.S. Nuclear Regulatory Commission

$ Regulates federal radioactive material users (e.g., Veterans Administration hospitals) and major nuclear facilities (e.g., nuclear power plants) in New York State.

GUIDELINES TO THE GENERATOR REPORT FORM

Waste Management Method	Description	Sections to Complete
Storage for Decay C On Site	LLRW containing radionuclides with half-lives up to 90 days stored on site for decay and eventual disposal as non-radioactive waste.	Sections I, II-A, II-G, IV, V **NOTE: If managing LLRW by Storage for Decay only, use the condensed form**
Storage for Decay C Off Site	Same as above. The LLRW being reported has been transferred to an off-site facility.	Sections I, II-A, II-D, II-G, IV, V **See note directly above.**
Interim Storage C On or Off Site	LLRW containing radionuclides with half-lives greater than 90 days being held in long-term storage pending disposal. **THIS DOES NOT REFER TO ROUTINE ACCUMULATION OF LLRW FOR SUBSEQUENT TRANSFER TO A LICENSED DISPOSAL FACILITY.**	Sections I, II-A through C, II-F through I, III, IV, V, VI
Interim Storage C On or Off Site after Processing	Same as above.	All
Ship for Disposal C Direct	LLRW received by a licensed disposal facility via direct transfer from generator.	Sections I, II-A through C, II-F through I, III, IV, V, VI
Ship for Disposal via Broker/Processor	Some LLRW may undergo additional treatment prior to disposal. Please consider this when reporting LLRW volume in Section II-E. If you use a broker to transport your LLRW, he/she can supply this information.	All

RETURN ANNUALLY BY MARCH 1st TO:

NEW YORK STATE ENERGY RESEARCH AND DEVELOPMENT AUTHORITY
Radioactive Waste Policy and Nuclear Coordination Program
17 Columbia Circle
Albany, NY 12203-6399
llrwadmin@NYSERDA.ORG

CODE (official use only)

NOTE: Please refer to the **Instructions** before completing this form.

FOR THE PERIOD: JANUARY 1st THROUGH DECEMBER 31st

LOW-LEVEL RADIOACTIVE WASTE
REPORT FORM

PLEASE TYPE OR PRINT LEGIBLY
-Place mailing label from postcard in the space to the right
-Mark any corrections in the table below

Place Mailing Label Here
(Leave Blank If Submitting Electronically)

SECTION I. GENERATOR INFORMATION

A	**Updated Generator Information**		
ENTER 4-DIGIT GENERATOR ID (can be found on the mailing label on annual postcard): ____		ENTER REPORTING YEAR: 2005	
Licensing Agency/ies	**License No(s).**		
New York State Department of Labor	3095-4330		
New York State Department of Health			
New York City Department of Health			
U.S. Nuclear Regulatory Commission			
Your Facility Phone No.: (908)559 - 3687	Ext:	Email Address: jean.agostinelli@verizon.com	
Contact: Jean Agostinelli		Title: Vice President & Controller	
Facility Name: GTE Operation Support Incorporated			
Street Address: One Verizon Way, VC34W453			
City: Basking Ridge	County: Somerset	State: NJ	Zip Code: 07920-1097
B	Name and principal office of facility where LLRW is generated **if** different from A (above)		
Street Address: 140 Cantiague Rock Road			
City: Hicksville	County: Nassau	State: NY	Zip Code: 11801
C	Preparer's Name: Jean Agostinelli Jean Agostinelli	Title: Vice President & Controller	Telephone and Extension: (908) 559 – 3687

D	Identify, by issuing authority and number, permits that authorize transfer of your LLRW to a licensed LLRW disposal facility:		
	Issuing Authority	**Disposal Site Location**	**Disposal Site Use Permit Number**
	Utah DEQ - Division of Radiation Control	Clive, Utah	0205001352

E	**FACILITY TYPE CODE** Type in the appropriate letter and number for the appropriate code **OR** choose one from **EACH DROP-DOWN MENU** BELOW. Refer to the instructions to determine the facility type code that best describes your facility. **Choose only one code consisting of a letter and number.**
	Choose a Letter: **I. Industrial Other*** **Choose a Number:** _____

F	Briefly describe the activities, processes, or uses of radioactive material that result in LLRW generation at your facility.

Enviromental remediation and restoration

Remadiation via excavation of a former facility. The majority of the soil remediated contained radioactive contaminants of very low levels. Due to size of the excavation, this remediation produced large volumes of soils with low concentrations and thus low total activities. Also the wasted disposed included incindental PPE, metal debris, and other debris generated from the excavation, in addition to Instrument check Sources for Daily response checks (field instruments and Gamma Spec lab instruments).

This Report Form has been submitted by the preparer listed in item I(C) above. In submitting this form, preparer hereby certifies that the information set forth is true to the best of the preparer's knowledge.	DATE: 1/23/06

SECTION II. INFORMATION ON LLRW

A. LLRW AS GENERATED				
	Waste Description Code	Waste Management Method	Chemical Form Code	Other Hazard Code
	1	2	3	4
1	A22	W2	C4/C5	H8
2	A22	W2	C4/C5	H8
3	A36	W5	C4	H8
4	A22	W5	C4/C5	H8
5				
6				
7				
8				
9				
10				
11				

CODES for SECTION II of the LOW-LEVEL RADIOACTIVE WASTE REPORT FORM

Note: If you respond "other" to any item, please provide an explanation on the Attachment Sheet provided in Section VII.

A. LLRW AS GENERATED

1 WASTE DESCRIPTION CODE

Choose the category that best describes the waste.

- 20 Charcoal
- 21 Incinerator Ash
- 22 Soil
- 23 Gas
- 24 Oil
- 25 Aqueous Liquid
- 26 Filter Media
- 27 Mechanical Filter
- 29 Demolition Rubble
- 30 Cation Ion-exchange Media
- 31 Anion Ion-exchange Media
- 32 Mixed Bed Ion-exchange Media
- 33 Contaminated Equipment
- 34 Organic Liquid (except oil)
- 35 Glassware or Labware
- 36 Sealed Source/Device
- 37 Paint or Plating
- 38 Evaporator Bottoms/ Sludges/Concentrates
- 39 Dry or Compactible Trash (paper, plastic, glass, etc.)
- 40 Noncompactible Trash (metal components, etc.)
- 41 Animal Carcass
- 42 Biological Material (except animal carcass)
- 43 Activated Material
- 44 Material that will be Incinerated
- 59 Other (describe)

2 WASTE MANAGEMENT METHOD

Transfer to Authorized Recipient

- W1 Transfer to Disposal Site via Broker
- W2 Transfer to Disposal Site Directly
- W3 Transfer - Other (describe)

Interim Storage

- W4 Placed in Storage before current reporting year
- W5 Placed in Storage during current reporting year
- W6 Shipped for Treatment prior to Storage

Storage for Decay

- W7 Storage for Decay (Only limited information required. See instructions.)

3 CHEMICAL FORM CODE

- C1 Paper and Plastic
- C2 Glass
- C3 Metals
- C4 Metal Oxides
- C5 Inorganic Salts
- C6 Organic Salts
- C7 Nucleic Acids
- C8 Amino Acids, Proteins, Enzymes
- C9 Carbohydrates, Sugars
- C10 Lipids, Fatty Acids
- C11 Other (describe)

4 OTHER HAZARD CODE

- H1 Ignitable
- H2 Corrosive
- H3 Toxic
- H4 Reactive
- H5 Pathogenic
- H6 Carcinogenic
- H7 Other (describe)
- H8 None

B. ON-SITE WASTE TREATMENT

	Treatment Code	Sorption or Solidification Code	Effect of Treatment	Post-Treatment Volume (m^3)
	5	6	7	8
1	T21	100	N/A	N/A
2	T21	100	N/A	N/A
3	T21	100	N/A	N/A
4	T21	100	N/A	N/A
5				
6				
7				
8				
9				
10				
11				

B. ON-SITE WASTE TREATMENT

5 TREATMENT CODE

T1 Compaction
T2 Supercompaction
T3 Evaporation/ Crystallization
T4 Fluid Bed Drying/ Calcination
T5 Wet Oxidation
T6 Membrane Separation (ultrafiltration, reverse osmosis)
T7 Incineration
T8 Solidification
T9 Adsorption
T10 Sorting/Segregation
T11 Macroencapsulation
T12 Absorption
T13 Decontamination
T14 Surface Removal (scabbing, abrasive cleaning)
T15 Dry Chemical Packing (lime)
T16 Size Reduction (sectioning, shredding, cutting)
T17 Steam Reform
T18 Catalytic Extraction Process
T19 Dewatered
T20 Other (describe)
T21 None

6 SOLIDIFICATION OR SORPTION CODE

Sorption
60 Speedi Dri
61 Celetom
62 Floor Dry/Superfine
63 Hi Dri
64 Safe T Sorb
65 Safe N Dri
66 Florco
67 Florco X
68 Solid A Sorb
69 Chemsil 30
70 Chemsil 50
72 Dicaperl HP200
73 Dicaperl HP500
74 Petroset
75 Petroset II
76 Aquaset
77 Aquaset II
89 Other (describe)

Solidification
90 Cement
91 Concrete (encapsulation)
92 Bitumen
93 Vinyl Chloride
94 Vinyl Ester Styrene
99 Other (describe)
100 None Required

7 EFFECT OF TREATMENT

Impact of treatment on volume may be shown in percent or ratio. Note increase or decrease by 8 or 9, and describe change in chemical and physical form.

8 POST-TREATMENT VOLUME

Volume must be noted in cubic meters (m^3).

SECTION II. INFORMATION ON LLRW (cont.)

C. ON-SITE CONTAINER INFORMATION					D. BROKER/PROCESSOR INFORMATION		
	Container Description Code	Container Volume (m^3)	Maximum Surface Radiation Level (mSv/hr)	Number of Containers	Broker Code	Processor Code	Treatment Code
	9	10	11	12	13	14	15
1	19	3.9	.0002	104	BC9	N/A	N/A
2	19	3.2	.0001	2	BC9	N/A	N/A
3	4	.038	<.005	1	BC10	P5	T21
4	2	101.26	.0001	30	N/A	N/A	N/A
5							
6							
7							
8							
9							
10							
11							

C. ON-SITE CONTAINER INFORMATION

9 CONTAINER DESCRIPTION CODE

1 Wooden Box or Crate
2 Metal Box
3 Plastic Drum or Pail
4 Metal Drum or Pail
5 Metal Tank or Liner
6 Concrete Tank or Liner
7 Polyethylene Tank or Liner
8 Fiberglass Tank or Liner
9 Demineralizer
10 Gas Cylinder
11 Bulk, Unpackaged Waste
12 Unpackaged Components
13 High-Integrity Container
14 Fiberboard Drum
19 Other (describe)

10 CONTAINER VOLUME

Volume must be noted in cubic meters (m^3).

11 MAXIMUM SURFACE RADIATION LEVEL

Surface radiation must be noted in mSv/hr.

12 NUMBER OF CONTAINERS

This information is required for each waste form.

D. BROKER/PROCESSOR INFORMATION

13 BROKER CODE

BC1 NDL
BC2 Radiac
BC3 Adco
BC4 Teledyne
BC5 US Ecology
BC6 Chem-Nuclear
BC7 SEG
BC8 Bionomics
BC9 Direct transfer
BC10 Other (describe)
BC11 None

14 PROCESSOR CODE

P1 GTS Duratek
P2 NSSI
P3 DSSI
P4 Chem Nuclear, IL
P5 Alaron
P6 Quadrex, TN
P7 Permafix, FL
P8 ATG, TN
P9 ATG, WA
P10 Other (describe)

15 TREATMENT CODE

See codes B-5.

SECTION II. INFORMATION ON LLRW (cont.)

E. POST-PROCESSOR TREATMENT INFORMATION			F. OTHER CHARACTERISTICS				
			Source Material		SNM		
Effect of Treatment		Total Post-Treatment Volume (m^3)	Source Material Code	Weight of Source Material (grams)	SNM Code	Total SNM (grams)	Maximum grams SNM in any shipment (grams)
16		17	18	19	20	21	22
1	N/A	N/A	NU/NT	17914.7	N/A	N/A	N/A
2	N/A	N/A	UO/TO	592.1	SNM3	7.5	5.3
3	N/A	N/A	N/A	N/A	NA	N/A	N/A
4	N/A	N/A	NU/NT	3429	N/A	N/A	N/A
5							
6							
7							
8							
9							
10							
11							

E. POST-PROCESSOR TREATMENT INFORMATION

16 EFFECT OF TREATMENT
See instructions for B-7.

17 TOTAL POST-TREATMENT VOLUME
Volume must be noted in cubic meters (m^3).

F. OTHER CHARACTERISTICS

18 SOURCE MATERIAL CODE
Source Material C Enter one code per line. Use a separate line for each type of source material transferred.

- NU Natural Uranium
- DU Depleted Uranium
- UO Uranium Ores
- NT Natural Thorium
- TO Thorium Ores

19 WEIGHT OF SOURCE MATERIAL
Weight must be noted in grams (g).

20 SNM CODE
Special Nuclear Material means one of the following:

- SNM1 Plutonium
- SNM2 Uranium-233
- SNM3 Uranium enriched in the isotope 233 or in the isotope 235
- SNM4 Any material artificially enriched by any of the foregoing

21 TOTAL SNM
Weight must be noted in grams(g).

22 MAXIMUM GRAMS SNM IN ANY SHIPMENT
Self-explanatory.

SECTION II. INFORMATION ON LLRW (cont.)

F. OTHER CHARACTERISTICS (cont.)					G. DISPOSAL AND STORAGE INFORMATION			
Waste With Chelating Agents								
Chelate Code		Volume and Weight of LLRW		Weight % Chelates	LLRW Class	Disposition Code	Disposal Site Code	Storage Site Code
		Volume (m^3)	Weight (kg)					
23		24	25	26	27	28	29	30
1	N/A	N/A	N/A	N/A	AU	D1	DS2	N/A
2	N/A	N/A	N/A	N/A	AU	D1	DS2	N/A
3	N/A	N/A	N/A	N/A	AU	D5	N/A	S5
4	N/A	N/A	N/A	N/A	AU	D5	N/A	S1
5								
6								
7								
8								
9								
10								
11								

3 CHELATE CODE
- CA1 EDTA
- CA2 DTPA
- CA3 Carbolic Acid
- CA4 Hydroxy-carbolic Acids
- CA5 Citric Acid
- CA6 Glucinic Acid
- CA7 Other (describe)

4 VOLUME OF LLRW
Volume of LLRW containing chelating agents (m^3).

5 WEIGHT OF LLRW
Weight of LLRW containing chelating agents (kg).

6 WEIGHT % CHELATES
Weights less than 1% need not be reported.

G. DISPOSAL AND STORAGE

27 LLRW CLASS
Class of radioactive waste as described in sections 61.55 and 61.56 of Title 10, Code of Federal Regulations, as in effect on January 26, 1983, attached following instructions.
- AS Class A stable
- AU Class A unstable
- B Class B
- C Class C

28 DISPOSITION CODE
- D1 Directly to disposal
- D2 Treatment prior to disposal
- D3 Treatment/returned for storage
- D4 Treatment/no disposal (decontamination and reuse)
- D5 Storage/no treatment
- D6 Hold for decay on site and dispose as non-radioactive
- D7 Hold for decay off site and dispose as non-radioactive
- D8 Treatment/off-site storage
- D9 Other (describe)

29 DISPOSAL SITE
- DS1 Barnwell, SC
- DS2 Clive, UT
- DS3 Richland, WA
- DS4 Other (describe)

30 STORAGE SITE
- S1 On site
- S2 Radiac
- S3 NDL
- S4 Adco
- S5 Other (describe)

H. LLRW NOT MEETING DISPOSAL FACILITY ACCEPTANCE CRITERIA				
LLRW Class	**Hazard Code**	**Volume (m^3)**	**Activity (MBq)**	**Radionuclides**
31	32	33	34	35
N/A	N/A	N/A	N/A	N/A
N/A	N/A	N/A	N/A	N/A
N/A	N/A	N/A	N/A	N/A
N/A	N/A	N/A	N/A	N/A

H. LLRW WITH UNACCEPTABLE DISPOSAL CRITERIA

31 LLRW CLASS
See codes G-27.

32 HAZARD CODE
See codes B-4.

33 VOLUME
Volume must be noted in cubic meters (m^3).

34 ACTIVITY
Activity must be reported in MegaBecquerels (MBq).

35 RADIONUCLIDES
As applicable to H-3.

I. CONTAINERS WITH SURFACE RADIATION LEVELS GREATER THAN 2mSv/hr (200mR/hr)			
LLRW Class		**Volume (m^3)**	**Activity by Radionuclide (MBq)**
36		37	38
N/A	N/A	N/A	N/A

SECTION III. LLRW SUMMARY (In order for information to total correctly, press the TAB key to navigate between cells)

A. DISPOSAL TOTALS FOR THIS YEAR								
Classes	**Disposed at: Barnwell, SC**		**Disposed at: Clive, UT**		**Disposed at: Richland, WA**		**SUBTOTALS BY CLASS**	
Class A	**Volume (m^3)**	**Activity (MBq)**	**Volume (m^3)**	**Activity (MBq)**	**Volume (m^3)**	**Activity (MBq)**	**Volume –A**	**Activity –A**
Via Broker/ Processor							0.000	0.000
Direct Transfer			417.200	660.96			417.200	660.960
Class B							**Volume –B**	**Activity –B**
Via Broker/ Processor							0.000	0.000
Direct Transfer							0.000	0.000
Class C							**Volume –C**	**Activity –C**
Via Broker/ Processor							0.000	0.000
Direct Transfer							0.000	0.000
TOTALS	0.000	0.000	417.200	660.960	0.000	0.000		
					TOTAL ALL CLASSES		**VOLUME**	**ACTIVITY**
							417.200	660.960

(In order for information to total correctly, press the TAB key to navigate between cells)

B. INTERIM STORAGE TOTALS						
Classes	Placed in Interim Storage during this year		Placed in Interim Storage before this year		SUBTOTALS BY CLASS	
Class A	Volume (m³)	Activity (MBq)	Volume (m³)	Activity (MBq)	Volume - A	Activity - A
On Site			170.380	128.985	170.380	128.985
Off Site	0.038	0.190			0.038	0.190
Class B					Volume - B	Activity - B
On Site					0.000	0.000
Off Site					0.000	0.000
Class C					Volume - C	Activity - C
On Site					0.000	0.000
Off Site					0.000	0.000
TOTALS	0.038	0.190	170.380	128.985		
			TOTAL ALL CLASSES		170.418	129.175

SECTION IV. RADIONUCLIDE INFORMATION FOR WASTE DISPOSED, HELD FOR DECAY, AND STORED

NOTE: Radionuclides mean each individual radionuclide if known, or, at a minimum, all radionuclides that have been or would have to be identified on disposal site manifests. H-3, C-14, Tc-99, and I-129 **must be identified** where present.

A.1	List the radionuclides contained in the **LLRW disposed of** during this year (see response to Section III-A). **Use additional sheets** as necessary. (In order for information to total correctly, press the TAB key to navigate between cells)				
Radionuclide	**Activity (MBq)**	**Radionuclide**	**Activity (MBq)**	**Radionuclide**	**Activity (MBq)**
Th-230	10.728	Th-228	24.14		
Th-232	20.507	U-234	215.120		
U-235	0.611				
U-238	5.729				
U-nat	341.820				
Ac-227	2.034				
PA-231	9.345				
Ra-223	2.022				
Ra-226	6.360				
RA-228	20.510				
Th-227	2.034				
					Total Activity in MBq 660.960

Total activity for all radionuclides listed above:
Total activity should equal total for LLRW **disposed** of, as reported in Section III-A.

A.2	If any of the radionuclides listed in Table A-1 have half-lives of less than 90 days, please explain why these are not being held for decay and eventual disposal as non-radioactive waste.

B.1	List the radionuclides contained in the LLRW **being held in storage for decay on site** as of December 31. **Use additional sheets as necessary.**				
Radionuclide	**Radionuclide**	**Radionuclide**	**Radionuclide**	**Radionuclide**	**Radionuclide**
N/A	N/A	N/A	N/A	N/A	N/A
N/A	N/A	N/A	N/A	N/A	N/A

B.2	List the radionuclides contained in the LLRW **being held in storage for decay off site** as of December 31. **Use additional sheets as necessary.**				
Radionuclide	**Radionuclide**	**Radionuclide**	**Radionuclide**	**Radionuclide**	**Radionuclide**
N/A	N/A	N/A	N/A	N/A	N/A
N/A	N/A	N/A	N/A	N/A	N/A

C.1	**On site B** List radionuclides contained in LLRW in **interim storage on site** as of December 31. **Use additional sheets as necessary.** (In order for information to total correctly, press the TAB key to navigate between cells)				
Radionuclide	**Activity (MBq)**	**Radionuclide**	**Activity (MBq)**	**Radionuclide**	**Activity (MBq)**
Ac-227	0.245	Pa-231	1.040	Ra-223	0.227
Ra-226	0.688	Ra-228	2.903	Th-227	0.245
Th-228	3.411	Th-230	1.518	Th-232	2.903
U-234	44.461	U-nat	71.344		
					Total Activity in MBq 128.985

Total activity for all radionuclides listed above:
Total activity should equal total for LLRW **stored on site**, as reported.

C.2	**Off site B** List radionuclides contained in LLRW in **interim storage off site** as of December 31. **Use additional sheets as necessary.** (In order for information to total correctly, press the TAB key to navigate between cells)

Radionuclide	Activity (MBq)	Radionuclide	Activity (MBq)	Radionuclide	Activity (MBq)
Am-241	0.004	Te-123m	0.002		
Cd-109	0.046	Y-88	0.034		
Co-57	0.002				
Co-60	0.020				
Cr-51	0.056				
Cs-137	0.008				
Sn-113	0.008				
Sr-85	0.010				
					Total Activity in MBq 0.190

Total activity for all radionuclides listed above:
Total activity should equal total for LLRW being **stored off site**, as reported.

C.3	If any of the radionuclides listed in Table C-1 or C-2 have half-lives of less than 90 days, please explain why these are not being held for decay and eventual disposal as non-radioactive waste.

SECTION V. STORAGE FACILITY INFORMATION

NOTE: If your facility manages LLRW by storage for decay only, you only need to complete the Condensed Form for Decay in Storage Only.

ON-SITE STORAGE FACILITIES		
A.1	Briefly describe your on-site LLRW storage facilities. Include facilities you have for storage of special LLRW forms such as freezers, shielded areas for high-radiation-level wastes, or bermed storage areas for liquid wastes, and estimate the storage capacity for each.	
The area were samples are storage consist of 31 sea land containers and the capacity for each sea land is 101.26 Cubic meters.		
A.2	Total Storage Capacity: 3139 m^3	
A.3	Estimated maximum volume of LLRW held in storage for decay at any one time: 0 m^3	
B	Do you have any plans for increasing your on-site storage capacity?	☒ No. Skip to C. ☐ Yes. Complete this section.
Describe such plans and indicate your expected new storage capacity.		

OFF-SITE STORAGE FACILITIES	
C	Off-site storage facility information. Use additional pages if necessary.
Please indicate if off-site storage is for storage for decay or interim storage.	☐ Storage for decay ☒ Interim storage
Name of facility: Alaron Corperation	
Address: Rt 18 and Park Rd. Wampum , PA 16157	
Contact and phone number: Jonathan Wallace 724-535-5777	

NOTE: Please answer the following question based on LLRW requiring disposal at licensed LLRW disposal facilities, *not* LLRW held in storage for decay. DO NOT USE DESCRIPTIVE TERMS SUCH AS UNLIMITED, CONTINUOUS, OR INDEFINITE.

ESTIMATED STORAGE TIME FOR LLRW REQUIRING DISPOSAL		
D	Based on your anticipated LLRW generation rate and your anticipated capacity to store waste as of December 31, HOW MANY MONTHS could you continue to produce and store LLRW on site if access to licensed LLRW disposal facilities were no longer available?	**NOTE: Answer *must* be in months.** 24 months

SECTION VI. FUTURE LLRW GENERATION

2005 FUTURE LLRW GENERATION THAT WILL REQUIRE DISPOSAL
(In order for information to total correctly, press the TAB key to navigate between cells)

Year	Class	Activity (MBq)	Volume (m^3)	Radionuclides
2006	A	129.175	170.418	SEE SECTION VII ATTACHMENT SHEET
	B			
	C			
	Total	129.175	170.418	
2007	A	0.000	0.000	
	B			
	C			
	Total	0.000	0.000	
2008	A	0.000	0.000	
	B			
	C			
	Total	0.000	0.000	
2009	A	0.000	0.000	
	B			
	C			
	Total	0.000	0.000	
2010	A			
	B			
	C			
	Total	0.000	0.000	

SECTION VII ATTACHMENT SHEET
FOR ANY ADDITIONAL INFORMATION

SECTION II C. 0N SITE CONTAINER INFORMATION

CONTAINER DESCRIPTION CODE - 19 OTHER

DESCRIBE - LIFT LINERS Lines 1,2
10 Gallon drum- Line 3

SECTION VI FUTURE LLRW GENERATION

RADIONUCLIDES;

Soil - Th230, Th-232, U-235, U-238,U-nat,U-234,Ac-227,Pa-231,Ra-223,
Ra-226,Ra-228,Th-227,Th-228

Sources- Am-241, Cd-109, Co-57, Co-60, Cr-51, Cs-137, Sn-113, Sr-85, Te-123m, Y-88

Section II , D, broker code, other BC10 Chase Enviromental

Straight Bill of Lading

Shipper

MHF-LS For GTE Operations Support Incorporated
140 Contiague Rock Road
Hicksville, NY 11369

Consigned to

MHF-LS
1290 Poland ave
Youngstown , OH 44501

TR: TL:

Quantity	Description	
5	loading frames	
		Total weight

GENERATOR CERTIFICATION: I hereby certify and declare that the contents of this consignment are fully and accurately described above by proper shipping name and are classified, packed, marked, and labeled, and are in all respects in proper condition for transport by highway according to applicable international and national government regulations.

Printed/Typed Name	Signature	
Rob Miller for MHFLS at GTEOSI		
Transporter	Signature	

Date:

8/4/2005

Weight lbs
10,000
10,000

Date

8/4/2005

Date

8/4/2005

Straight Bill of Lading

Shipper

MHF-LS For GTE Operations Support Incorporated
140 Contiague Rock Road
Hicksville, NY 11369

Date: 8/5/2005

Consigned to

MHF-LS
1290 Poland ave
Youngstown , OH 44501

TR:

TL:

Quantity	Description		Weight lbs
5	loading frames		10,000
		Total weight	10,000

GENERATOR CERTIFICATION: I hereby certify and declare that the contents of this consignment are fully and accurately described above by proper shipping name and are classified, packed, marked, and labeled, and are in all respects in proper condition for transport by highway according to applicable international and national government regulations.

Printed/Typed Name	Signature		Date
Rob Miller for MHFLS at GTEOSI			8/5/2005
Transporter	Signature		Date
			8/5/2005

Straight Bill of Lading

Shipper
MHF-LS For GTE Operations Support Incorporated
140 Contiague Rock Road
Hicksville, NY 11369

Date: 8/4/2005

Consigned to
MHF-LS
190 Transport Dr
Sweetwater , TN 37874

TR: 55647 TL: 248232

Quantity	Description		Weight lbs
1	loading frames		2,000
3	Lifting frames		6,000
		Total weight	8,000
	MLFT 964815		
	MLFT 964861		
	MLFT 964844		
	MLOD 242029		

GENERATOR CERTIFICATION: I hereby certify and declare that the contents of this consignment are fully and accurately described above by proper shipping name and are classified, packed, marked, and labeled, and are in all respects in proper condition for transport by highway according to applicable international and national government regulations.

Printed/Typed Name	Signature		Date
Rob Miller for MHFLS at GTEOSI			8/4/2005
Transporter	Signature		Date
	8/4/05		8/4/2005

Date: 8/4/05

BILL OF LADING

Page 1 of 1

SHIP FROM

Name: GTEOSI C/O ENVIROCON
Address: 140 CANTIGUE ROCK RD
City/State/Zip: HICKSVILLE, NY 11801-1127
SID#:
FOB: ☐

Bill of Lading Number: VERIZON 2

BAR CODE SPACE

SHIP TO

Name: MHF-PS Location #: _____
Address: 190 TRANSPORT DRIVE
City/State/Zip: SWEETWATER, TN 37874
CID#:
FOB: ☐

CARRIER NAME: H & W TRUCKING
Trailer number:
Seal number(s):

SCAC:
Pro number:

BAR CODE SPACE

THIRD PARTY FREIGHT CHARGES BILL TO:

Name:
Address:
City/State/Zip:

Freight Charge Terms: *(freight charges are prepaid unless marked otherwise)*
Prepaid _____ Collect X ____ 3rd Party _____

SPECIAL INSTRUCTIONS:
PHONE: 423-337-3003

☐ (check box) Master Bill of Lading: with attached underlying Bills of Lading

CUSTOMER ORDER INFORMATION

CUSTOMER ORDER NUMBER	# PKGS	WEIGHT	PALLET/SLIP (CIRCLE ONE)		ADDITIONAL SHIPPER INFO
	4	6609	Y	N	LIFTING AND LOADING FRAMES
			Y	N	
			Y	N	
			Y	N	
			Y	N	
			Y	N	
			Y	N	
			Y	N	
GRAND TOTAL					

CARRIER INFORMATION

HANDLING UNIT QTY	HANDLING UNIT TYPE	PACKAGE QTY	PACKAGE TYPE	WEIGHT	H.M. (X)	COMMODITY DESCRIPTION (Commodities requiring special or additional care or attention in handling or stowing must be so marked and packaged as to ensure safe transportation with ordinary care. See Section 2(e) of NMFC Item 360)	LTL ONLY NMFC #	LTL ONLY CLASS
3	EA	3	EA	4956		LIFTING FRAMES	105680	50
1	EA	1	EA	1653		LOADING FRAME	133390-2	100
							RECEIVING	
							STAMP SPACE	
						GRAND TOTAL		

Where the rate is dependent on value, shippers are required to state specifically in writing the agreed or declared value of the property as follows:
"The agreed or declared value of the property is specifically stated by the shipper to be not exceeding
per ____"

COD Amount: $ _____
Fee Terms: Collect: ☐ Prepaid: ☐
Customer check acceptable: ☐

NOTE Liability Limitation for loss or damage in this shipment may be applicable. See 49 U.S.C. - 14706(c)(1)(A) and (B).

RECEIVED, subject to individually determined rates or contracts that have been agreed upon in writing between the carrier and shipper, if applicable, otherwise to the rates, classifications and rules that have been established by the carrier and are available to the shipper, on request, and to all applicable state and federal regulations.

The carrier shall not make delivery of this shipment without payment of freight and all other lawful charges.

_____ Shipper Signature

SHIPPER SIGNATURE / DATE
This is to certify that the above named materials are properly classified, packaged, marked and labeled, and are in proper condition for transportation according to the applicable regulations of the DOT.

Trailer Loaded:
☐ By Shipper
☐ By Driver

Freight Counted:
☐ By Shipper
☐ By Driver/pallets said to contain
☐ By Driver/Pieces

CARRIER SIGNATURE / PICKUP DATE
Carrier acknowledges receipt of packages and required placards. Carrier certifies emergency response information was made available and/or carrier has the DOT emergency response guidebook or equivalent documentation in the vehicle. Property described above is received in good order, except as noted.

Straight Bill of Lading

Shipper
MHF-LS For GTE Operations Support Incorporated
140 Contiague Rock Road
Hicksville, NY 11369

Date: 8/4/2005

Consigned to
MHF-LS
1290 Poland ave
Youngstown , OH 44501

TR: 7 TL: H4

Quantity	Description		Weight lbs
5	loading frames		10,000
		Total weight	10,000
	MLD 242019		
	STE		

GENERATOR CERTIFICATION: I hereby certify and declare that the contents of this consignment are fully and accurately described above by proper shipping name and are classified, packed, marked, and labeled, and are in all respects in proper condition for transport by highway according to applicable international and national government regulations

Printed/Typed Name	Signature		Date
Rob Miller for MHFLS at GTEOSI			8/4/2005
Transporter	Signature		Date
DALLAS HUGHBANKS			8/4/2005

Date: 8/4/05

BILL OF LADING

Page 1 of 1

SHIP FROM

Name: GTEOSI C/O ENVIROCON
Address: 140 CANTIGUE ROCK RD
City/State/Zip: HICKSVILLE, NY 11801-1127
SID#:
FOB: ☐

Bill of Lading Number: VERIZON 1

BAR CODE SPACE

SHIP TO

Name: MHF-LS YOUNGSTOWN Location #: _____
Address: 1290 POLAND AVE
City/State/Zip: YOUNGSTOWN, OH 44502
CID#:
FOB: ☐

CARRIER NAME: HANSEN LOGGING
Trailer number:
Seal number(s):

SCAC:
Pro number:

BAR CODE SPACE

THIRD PARTY FREIGHT CHARGES BILL TO

Name: MHF-PS
Address: 190 TRANSPORT DRIVE
City/State/Zip: SWEETWATER, TN 37874

Freight Charge Terms: *(freight charges are prepaid unless marked otherwise)*
Prepaid _____ Collect _____ 3rd Party X

SPECIAL INSTRUCTIONS:
PHONE: 330-744-9577

☐ (check box) Master Bill of Lading: with attached underlying Bills of Lading

CUSTOMER ORDER INFORMATION

CUSTOMER ORDER NUMBER	# PKGS	WEIGHT	PALLET/SLIP (CIRCLE ONE)		ADDITIONAL SHIPPER INFO
	5	8265	Y	N	LOADING FRAMES
			Y	N	
			Y	N	
			Y	N	
			Y	N	
			Y	N	
			Y	N	
			Y	N	
GRAND TOTAL					

CARRIER INFORMATION

HANDLING UNIT QTY	HANDLING UNIT TYPE	PACKAGE QTY	PACKAGE TYPE	WEIGHT	H.M. (X)	COMMODITY DESCRIPTION (Commodities requiring special or additional care or attention in handling or stowing must be so marked and packaged as to ensure safe transportation with ordinary care. See Section 2(e) of NMFC Item 360)	LTL ONLY NMFC #	LTL ONLY CLASS
5	EA	5	EA	8265		LOADING FRAMES	133390-2	100
							RECEIVING	
							STAMP SPACE	
						GRAND TOTAL		

Where the rate is dependent on value, shippers are required to state specifically in writing the agreed or declared value of the property as follows:
"The agreed or declared value of the property is specifically stated by the shipper to be not exceeding _____ per _____"

COD Amount: $ _____
Fee Terms: Collect: ☐ Prepaid: ☐
Customer check acceptable: ☐

NOTE Liability Limitation for loss or damage in this shipment may be applicable. See 49 U.S.C. - 14706(c)(1)(A) and (B).

RECEIVED, subject to individually determined rates or contracts that have been agreed upon in writing between the carrier and shipper, if applicable, otherwise to the rates, classifications and rules that have been established by the carrier and are available to the shipper, on request, and to all applicable state and federal regulations.

The carrier shall not make delivery of this shipment without payment of freight and all other lawful charges.

_____ Shipper Signature

SHIPPER SIGNATURE / DATE
This is to certify that the above named materials are properly classified, packaged, marked and labeled, and are in proper condition for transportation according to the applicable regulations of the DOT.

Trailer Loaded:
☐ By Shipper
☐ By Driver

Freight Counted:
☐ By Shipper
☐ By Driver/pallets said to contain
☐ By Driver/Pieces

CARRIER SIGNATURE / PICKUP DATE
Carrier acknowledges receipt of packages and required placards. Carrier certifies emergency response information was made available and/or carrier has the DOT emergency response guidebook or equivalent documentation in the vehicle. *Property described above is received in good order, except as noted.*

Date: 8/5/05

BILL OF LADING

Page 1 of 1

SHIP FROM

Name: GTEOSI C/O ENVIROCON
Address: 140 CANTIGUE ROCK RD
City/State/Zip: HICKSVILLE, NY 11801-1127
SID#:
FOB: ☐

SHIP TO

Name: MHF-LS YOUNGSTOWN Location #:
Address: 1290 POLAND AVE
City/State/Zip: YOUNGSTOWN, OH 44502
CID#:
FOB: ☐

THIRD PARTY FREIGHT CHARGES BILL TO:

Name: MHF-PS
Address: 190 TRANSPORT DRIVE
City/State/Zip: SWEETWATER, TN 37874

SPECIAL INSTRUCTIONS:
PHONE: 330-744-9577

Bill of Lading Number: VERIZON 4

BAR CODE SPACE

CARRIER NAME: SFERRA STEEL ERECTING
Trailer number: 106
Seal number(s): N/A

SCAC:
Pro number:

BAR CODE SPACE

Freight Charge Terms: *(freight charges are prepaid unless marked otherwise)*
Prepaid _____ Collect _____ 3rd Party X

☐ (check box) Master Bill of Lading: with attached underlying Bills of Lading

CUSTOMER ORDER INFORMATION

CUSTOMER ORDER NUMBER	# PKGS	WEIGHT	PALLET/SLIP (CIRCLE ONE)		ADDITIONAL SHIPPER INFO
	5	8265	Y	N	LOADING FRAMES
			Y	N	
			Y	N	
			Y	N	
			Y	N	
			Y	N	
			Y	N	
			Y	N	
GRAND TOTAL					

CARRIER INFORMATION

HANDLING UNIT QTY	HANDLING UNIT TYPE	PACKAGE QTY	PACKAGE TYPE	WEIGHT	H.M. (X)	COMMODITY DESCRIPTION (Commodities requiring special or additional care or attention in handling or stowing must be so marked and packaged as to ensure safe transportation with ordinary care. See Section 2(e) of NMFC Item 360)	LTL ONLY NMFC #	LTL ONLY CLASS
5	EA	5	EA	8265		LOADING FRAMES	133390-2	100
							RECEIVING	
							STAMP SPACE	
						GRAND TOTAL		

Where the rate is dependent on value, shippers are required to state specifically in writing the agreed or declared value of the property as follows:
"The agreed or declared value of the property is specifically stated by the shipper to be not exceeding _____ per _____."

COD Amount: $ _____
Fee Terms: Collect: ☐ Prepaid: ☐
Customer check acceptable: ☐

NOTE Liability Limitation for loss or damage in this shipment may be applicable. See 49 U.S.C. - 14706(c)(1)(A) and (B).

RECEIVED, subject to individually determined rates or contracts that have been agreed upon in writing between the carrier and shipper, if applicable, otherwise to the rates, classifications and rules that have been established by the carrier and are available to the shipper, on request, and to all applicable state and federal regulations.

The carrier shall not make delivery of this shipment without payment of freight and all other lawful charges.

Shipper Signature

SHIPPER SIGNATURE / DATE
This is to certify that the above named materials are properly classified, packaged, marked and labeled, and are in proper condition for transportation according to the applicable regulations of the DOT.
8-5-05

Trailer Loaded:
☒ By Shipper
☐ By Driver

Freight Counted:
☐ By Shipper
☐ By Driver/pallets said to contain
☐ By Driver/Pieces

CARRIER SIGNATURE / PICKUP DATE
Carrier acknowledges receipt of packages and required placards. Carrier certifies emergency response guidebook or equivalent documentation in the vehicle. Property described above is received in good order, except as noted.

Lloyd Cullips

Date: 8/5/05

BILL OF LADING

Page 1 of 1

SHIP FROM

Name: GTEOSI C/O ENVIROCON
Address: 140 CANTIGUE ROCK RD
City/State/Zip: HICKSVILLE, NY 11801-1127
SID#:
FOB: ☐

Bill of Lading Number: VERIZON 3

BAR CODE SPACE

SHIP TO

Name: MHF-LS YOUNGSTOWN Location #:
Address: 1290 POLAND AVE
City/State/Zip: YOUNGSTOWN, OH 44502
CID#:
FOB: ☐

CARRIER NAME: ~~GLTJRC~~ L&R Express
Trailer number: F50
Seal number(s): NA

SCAC:
Pro number:

BAR CODE SPACE

THIRD PARTY FREIGHT CHARGES BILL TO:

Name: MHF-PS
Address: 190 TRANSPORT DRIVE
City/State/Zip: SWEETWATER, TN 37874

Freight Charge Terms: *(freight charges are prepaid unless marked otherwise)*
Prepaid _____ Collect _____ 3rd Party X

SPECIAL INSTRUCTIONS:
PHONE: 330-744-9577

☐ (check box) Master Bill of Lading: with attached underlying Bills of Lading

CUSTOMER ORDER INFORMATION

CUSTOMER ORDER NUMBER	# PKGS	WEIGHT	PALLET/SLIP (CIRCLE ONE)		ADDITIONAL SHIPPER INFO
	5	8265	Y	N	LOADING FRAMES
			Y	N	
			Y	N	
			Y	N	
			Y	N	
			Y	N	
			Y	N	
			Y	N	
GRAND TOTAL					

CARRIER INFORMATION

HANDLING UNIT QTY	HANDLING UNIT TYPE	PACKAGE QTY	PACKAGE TYPE	WEIGHT	H.M. (X)	COMMODITY DESCRIPTION (Commodities requiring special or additional care or attention in handling or stowing must be so marked and packaged as to ensure safe transportation with ordinary care. See Section 2(e) of NMFC Item 360)	LTL ONLY NMFC #	LTL ONLY CLASS
5	EA	5	EA	8265		LOADING FRAMES	133390-2	100
							RECEIVING	
							STAMP SPACE	
						GRAND TOTAL		

Where the rate is dependent on value, shippers are required to state specifically in writing the agreed or declared value of the property as follows:
"The agreed or declared value of the property is specifically stated by the shipper to be not exceeding
per

COD Amount: $
Fee Terms: Collect: ☐ Prepaid: ☐
Customer check acceptable: ☐

NOTE Liability Limitation for loss or damage in this shipment may be applicable. See 49 U.S.C. § 14706(c)(1)(A) and (B).

RECEIVED, subject to individually determined rates or contracts that have been agreed upon in writing between the carrier and shipper, if applicable, otherwise to the rates, classifications and rules that have been established by the carrier and are available to the shipper, on request, and to all applicable state and federal regulations.

The carrier shall not make delivery of this shipment without payment of freight and all other lawful charges.

Shipper Signature

SHIPPER SIGNATURE / DATE

This is to certify that the above named materials are properly classified, packaged, marked and labeled, and are in proper condition for transportation according to the applicable regulations of the DOT.

8-5-05

Trailer Loaded:
☒ By Shipper
☐ By Driver

Freight Counted:
☐ By Shipper
☐ By Driver/pallets said to contain
☐ By Driver/Pieces

CARRIER SIGNATURE / PICKUP DATE

Carrier acknowledges receipt of packages and required placards. Carrier certifies emergency response information was made available and/or carrier has the DOT emergency response guidebook or equivalent documentation in the vehicle. *Property described above is received in good order, except as noted.*

D. Allison
8-5-05

Straight Bill of Lading

Shipper

MHF-LS For GTE Operations Support Incorporated
140 Contiague Rock Road
Hicksville, NY 11369

Date: 8/5/2005

Consigned to

MHF-LS
1290 Poland ave
Youngstown , OH 44501

TR:

TL:

Quantity	Description		Weight lbs
5	loading frames		10,000
		Total weight	10,000

GENERATOR CERTIFICATION: I hereby certify and declare that the contents of this consignment are fully and accurately described above by proper shipping name and are classified, packed, marked, and labeled, and are in all respects in proper condition for transport by highway according to applicable international and national government regulations.

Printed/Typed Name	Signature		Date
Rob Miller for MHFLS at GTEOSI			8/5/2005
Transporter	Signature		Date
			8/5/2005

Straight Bill of Lading

Shipper

MHF-LS For GTE Operations Support Incorporated
140 Contiague Rock Road
Hicksville, NY 11369

Date: 8/4/2005

Consigned to

MHF-LS
190 Transport Dr
Sweetwater , TN 37874

TR:

TL:

Quantity	Description		Weight lbs
1	loading frames		2,000
3	Lifting frames		6,000
		Total weight	8,000

GENERATOR CERTIFICATION: I hereby certify and declare that the contents of this consignment are fully and accurately described above by proper shipping name and are classified, packed, marked, and labeled, and are in all respects in proper condition for transport by highway according to applicable international and national government regulations.

Printed/Typed Name	Signature		Date
Rob Miller for MHFLS at GTEOSI			8/4/2005
Transporter	Signature		Date
			8/4/2005

Straight Bill of Lading

Shipper
MHF-LS For GTE Operations Support Incorporated
140 Contiague Rock Road
Hicksville, NY 11369

Date: 8/4/2005

Consigned to
MHF-LS
190 Transport Dr
Sweetwater , TN 37874

TR: 55647 TL: 248232

Quantity	Description		Weight lbs
1	loading frames		2,000
3	Lifting frames		6,000
		Total weight	8,000
	MLFT 964815		
	MLFT 964861		
	MLFT 964844		
	MLOD 242029		

GENERATOR CERTIFICATION: I hereby certify and declare that the contents of this consignment are fully and accurately described above by proper shipping name and are classified, packed, marked, and labeled, and are in all respects in proper condition for transport by highway according to applicable international and national government regulations.

Printed/Typed Name	Signature		Date
Rob Miller for MHFLS at GTEOSI			8/4/2005
Transporter	Signature		Date
	8/4/05		8/4/2005

Date: 8/4/05

BILL OF LADING

Page 1 of 1

SHIP FROM

Name: GTEOSI C/O ENVIROCON
Address: 140 CANTIGUE ROCK RD
City/State/Zip: HICKSVILLE, NY 11801-1127
SID#:
FOB: ☐

Bill of Lading Number: VERIZON 2

BAR CODE SPACE

SHIP TO

Name: MHF-PS Location #: _____
Address: 190 TRANSPORT DRIVE
City/State/Zip: SWEETWATER, TN 37874
CID#:
FOB: ☐

CARRIER NAME: H & W TRUCKING
Trailer number:
Seal number(s):

SCAC:
Pro number:

BAR CODE SPACE

THIRD PARTY FREIGHT CHARGES BILL TO:

Name:
Address:
City/State/Zip:

Freight Charge Terms: *(freight charges are prepaid unless marked otherwise)*
Prepaid _____ Collect X ____ 3rd Party _____

SPECIAL INSTRUCTIONS:
PHONE: 423-337-3003

☐ (check box) Master Bill of Lading: with attached underlying Bills of Lading

CUSTOMER ORDER INFORMATION

CUSTOMER ORDER NUMBER	# PKGS	WEIGHT	PALLET/SLIP (CIRCLE ONE)		ADDITIONAL SHIPPER INFO
	4	6609	Y	N	LIFTING AND LOADING FRAMES
			Y	N	
			Y	N	
			Y	N	
			Y	N	
			Y	N	
			Y	N	
			Y	N	
GRAND TOTAL					

CARRIER INFORMATION

HANDLING UNIT QTY	HANDLING UNIT TYPE	PACKAGE QTY	PACKAGE TYPE	WEIGHT	H.M. (X)	COMMODITY DESCRIPTION (Commodities requiring special or additional care or attention in handling or stowing must be so marked and packaged as to ensure safe transportation with ordinary care. See Section 2(e) of NMFC Item 360)	LTL ONLY NMFC #	LTL ONLY CLASS
3	EA	3	EA	4956		LIFTING FRAMES	105680	50
1	EA	1	EA	1653		LOADING FRAME	133390-2	100
							RECEIVING	
							STAMP SPACE	
						GRAND TOTAL		

Where the rate is dependent on value, shippers are required to state specifically in writing the agreed or declared value of the property as follows:
"The agreed or declared value of the property is specifically stated by the shipper to be not exceeding
per ____"

COD Amount: $ _____
Fee Terms: Collect: ☐ Prepaid: ☐
Customer check acceptable: ☐

NOTE Liability Limitation for loss or damage in this shipment may be applicable. See 49 U.S.C. - 14706(c)(1)(A) and (B).

RECEIVED, subject to individually determined rates or contracts that have been agreed upon in writing between the carrier and shipper, if applicable, otherwise to the rates, classifications and rules that have been established by the carrier and are available to the shipper, on request, and to all applicable state and federal regulations.

The carrier shall not make delivery of this shipment without payment of freight and all other lawful charges.

_____ Shipper Signature

SHIPPER SIGNATURE / DATE
This is to certify that the above named materials are properly classified, packaged, marked and labeled, and are in proper condition for transportation according to the applicable regulations of the DOT.

Trailer Loaded:
☐ By Shipper
☐ By Driver

Freight Counted:
☐ By Shipper
☐ By Driver/pallets said to contain
☐ By Driver/Pieces

CARRIER SIGNATURE / PICKUP DATE
Carrier acknowledges receipt of packages and required placards. Carrier certifies emergency response information was made available and/or carrier has the DOT emergency response guidebook or equivalent documentation in the vehicle. Property described above is received in good order, except as noted.

Straight Bill of Lading

Shipper
MHF-LS For GTE Operations Support Incorporated
140 Contiague Rock Road
Hicksville, NY 11369

Date: 8/4/2005

Consigned to
MHF-LS
1290 Poland ave
Youngstown , OH 44501

TR: 7 TL: H4

Quantity	Description		Weight lbs
5	loading frames		10,000
		Total weight	10,000
	MLD 242019		
	STE		

GENERATOR CERTIFICATION: I hereby certify and declare that the contents of this consignment are fully and accurately described above by proper shipping name and are classified, packed, marked, and labeled, and are in all respects in proper condition for transport by highway according to applicable international and national government regulations

Printed/Typed Name	Signature		Date
Rob Miller for MHFLS at GTEOSI			8/4/2005
Transporter	Signature		Date
DALLAS HUGHBANKS			8/4/2005

Date: 8/4/05

BILL OF LADING

Page 1 of 1

SHIP FROM

Name: GTEOSI C/O ENVIROCON
Address: 140 CANTIGUE ROCK RD
City/State/Zip: HICKSVILLE, NY 11801-1127
SID#:
FOB: ☐

Bill of Lading Number: VERIZON 1

BAR CODE SPACE

SHIP TO

Name: MHF-LS YOUNGSTOWN Location #: _____
Address: 1290 POLAND AVE
City/State/Zip: YOUNGSTOWN, OH 44502
CID#:
FOB: ☐

CARRIER NAME: HANSEN LOGGING
Trailer number:
Seal number(s):

SCAC:
Pro number:

BAR CODE SPACE

THIRD PARTY FREIGHT CHARGES BILL TO

Name: MHF-PS
Address: 190 TRANSPORT DRIVE
City/State/Zip: SWEETWATER, TN 37874

Freight Charge Terms: *(freight charges are prepaid unless marked otherwise)*
Prepaid _____ Collect _____ 3rd Party X

SPECIAL INSTRUCTIONS:
PHONE: 330-744-9577

☐ (check box) Master Bill of Lading: with attached underlying Bills of Lading

CUSTOMER ORDER INFORMATION

CUSTOMER ORDER NUMBER	# PKGS	WEIGHT	PALLET/SLIP (CIRCLE ONE)		ADDITIONAL SHIPPER INFO
	5	8265	Y	N	LOADING FRAMES
			Y	N	
			Y	N	
			Y	N	
			Y	N	
			Y	N	
			Y	N	
			Y	N	
GRAND TOTAL					

CARRIER INFORMATION

HANDLING UNIT QTY	HANDLING UNIT TYPE	PACKAGE QTY	PACKAGE TYPE	WEIGHT	H.M. (X)	COMMODITY DESCRIPTION (Commodities requiring special or additional care or attention in handling or stowing must be so marked and packaged as to ensure safe transportation with ordinary care. See Section 2(e) of NMFC Item 360)	LTL ONLY NMFC #	LTL ONLY CLASS
5	EA	5	EA	8265		LOADING FRAMES	133390-2	100
							RECEIVING	
							STAMP SPACE	
						GRAND TOTAL		

Where the rate is dependent on value, shippers are required to state specifically in writing the agreed or declared value of the property as follows:
"The agreed or declared value of the property is specifically stated by the shipper to be not exceeding _____ per _____"

COD Amount: $ _____
Fee Terms: Collect: ☐ Prepaid: ☐
Customer check acceptable: ☐

NOTE Liability Limitation for loss or damage in this shipment may be applicable. See 49 U.S.C. - 14706(c)(1)(A) and (B).

RECEIVED, subject to individually determined rates or contracts that have been agreed upon in writing between the carrier and shipper, if applicable, otherwise to the rates, classifications and rules that have been established by the carrier and are available to the shipper, on request, and to all applicable state and federal regulations.

The carrier shall not make delivery of this shipment without payment of freight and all other lawful charges.

_____ Shipper Signature

SHIPPER SIGNATURE / DATE
This is to certify that the above named materials are properly classified, packaged, marked and labeled, and are in proper condition for transportation according to the applicable regulations of the DOT.

Trailer Loaded:
☐ By Shipper
☐ By Driver

Freight Counted:
☐ By Shipper
☐ By Driver/pallets said to contain
☐ By Driver/Pieces

CARRIER SIGNATURE / PICKUP DATE
Carrier acknowledges receipt of packages and required placards. Carrier certifies emergency response information was made available and/or carrier has the DOT emergency response guidebook or equivalent documentation in the vehicle. *Property described above is received in good order, except as noted.*

Date: 8/5/05

BILL OF LADING

Page 1 of 1

SHIP FROM

Name: GTEOSI C/O ENVIROCON
Address: 140 CANTIGUE ROCK RD
City/State/Zip: HICKSVILLE, NY 11801-1127
SID#:
FOB: ☐

SHIP TO

Name: MHF-LS YOUNGSTOWN Location #:
Address: 1290 POLAND AVE
City/State/Zip: YOUNGSTOWN, OH 44502
CID#:
FOB: ☐

THIRD PARTY FREIGHT CHARGES BILL TO:

Name: MHF-PS
Address: 190 TRANSPORT DRIVE
City/State/Zip: SWEETWATER, TN 37874

SPECIAL INSTRUCTIONS:
PHONE: 330-744-9577

Bill of Lading Number: VERIZON 4

BAR CODE SPACE

CARRIER NAME: SFERRA STEEL ERECTING
Trailer number: 106
Seal number(s): N/A

SCAC:
Pro number:

BAR CODE SPACE

Freight Charge Terms: *(freight charges are prepaid unless marked otherwise)*
Prepaid _____ Collect _____ 3rd Party X

☐ (check box) Master Bill of Lading: with attached underlying Bills of Lading

CUSTOMER ORDER INFORMATION

CUSTOMER ORDER NUMBER	# PKGS	WEIGHT	PALLET/SLIP (CIRCLE ONE)		ADDITIONAL SHIPPER INFO
	5	8265	Y	N	LOADING FRAMES
			Y	N	
			Y	N	
			Y	N	
			Y	N	
			Y	N	
			Y	N	
			Y	N	
GRAND TOTAL					

CARRIER INFORMATION

HANDLING UNIT QTY	HANDLING UNIT TYPE	PACKAGE QTY	PACKAGE TYPE	WEIGHT	H.M. (X)	COMMODITY DESCRIPTION (Commodities requiring special or additional care or attention in handling or stowing must be so marked and packaged as to ensure safe transportation with ordinary care. See Section 2(e) of NMFC Item 360)	LTL ONLY NMFC #	LTL ONLY CLASS
5	EA	5	EA	8265		LOADING FRAMES	133390-2	100
							RECEIVING	
							STAMP SPACE	
						GRAND TOTAL		

Where the rate is dependent on value, shippers are required to state specifically in writing the agreed or declared value of the property as follows:
"The agreed or declared value of the property is specifically stated by the shipper to be not exceeding _____ per _____."

COD Amount: $ _____
Fee Terms: Collect: ☐ Prepaid: ☐
Customer check acceptable: ☐

NOTE Liability Limitation for loss or damage in this shipment may be applicable. See 49 U.S.C. - 14706(c)(1)(A) and (B).

RECEIVED, subject to individually determined rates or contracts that have been agreed upon in writing between the carrier and shipper, if applicable, otherwise to the rates, classifications and rules that have been established by the carrier and are available to the shipper, on request, and to all applicable state and federal regulations.

The carrier shall not make delivery of this shipment without payment of freight and all other lawful charges.

Shipper Signature

SHIPPER SIGNATURE / DATE
This is to certify that the above named materials are properly classified, packaged, marked and labeled, and are in proper condition for transportation according to the applicable regulations of the DOT.
8-5-05

Trailer Loaded:
☒ By Shipper
☐ By Driver

Freight Counted:
☐ By Shipper
☐ By Driver/pallets said to contain
☐ By Driver/Pieces

CARRIER SIGNATURE / PICKUP DATE
Carrier acknowledges receipt of packages and required placards. Carrier certifies emergency response guidebook or equivalent documentation in the vehicle. Property described above is received in good order, except as noted.

Lloyd Cullips

Date: 8/5/05

BILL OF LADING

Page 1 of 1

SHIP FROM

Name: GTEOSI C/O ENVIROCON
Address: 140 CANTIGUE ROCK RD
City/State/Zip: HICKSVILLE, NY 11801-1127
SID#:
FOB: ☐

Bill of Lading Number: VERIZON 3

BAR CODE SPACE

SHIP TO

Name: MHF-LS YOUNGSTOWN Location #:
Address: 1290 POLAND AVE
City/State/Zip: YOUNGSTOWN, OH 44502
CID#:
FOB: ☐

CARRIER NAME: ~~GLTJRC~~ L&R Express
Trailer number: F50
Seal number(s): NA

SCAC:
Pro number:

BAR CODE SPACE

THIRD PARTY FREIGHT CHARGES BILL TO:

Name: MHF-PS
Address: 190 TRANSPORT DRIVE
City/State/Zip: SWEETWATER, TN 37874

Freight Charge Terms: *(freight charges are prepaid unless marked otherwise)*
Prepaid _____ Collect _____ 3rd Party X

SPECIAL INSTRUCTIONS:
PHONE: 330-744-9577

☐ (check box) Master Bill of Lading: with attached underlying Bills of Lading

CUSTOMER ORDER INFORMATION

CUSTOMER ORDER NUMBER	# PKGS	WEIGHT	PALLET/SLIP (CIRCLE ONE)		ADDITIONAL SHIPPER INFO
	5	8265	Y	N	LOADING FRAMES
			Y	N	
			Y	N	
			Y	N	
			Y	N	
			Y	N	
			Y	N	
			Y	N	
GRAND TOTAL					

CARRIER INFORMATION

HANDLING UNIT QTY	HANDLING UNIT TYPE	PACKAGE QTY	PACKAGE TYPE	WEIGHT	H.M. (X)	COMMODITY DESCRIPTION (Commodities requiring special or additional care or attention in handling or stowing must be so marked and packaged as to ensure safe transportation with ordinary care. See Section 2(e) of NMFC Item 360)	LTL ONLY NMFC #	LTL ONLY CLASS
5	EA	5	EA	8265		LOADING FRAMES	133390-2	100
							RECEIVING	
							STAMP SPACE	
						GRAND TOTAL		

Where the rate is dependent on value, shippers are required to state specifically in writing the agreed or declared value of the property as follows:
"The agreed or declared value of the property is specifically stated by the shipper to be not exceeding
per

COD Amount: $
Fee Terms: Collect: ☐ Prepaid: ☐
Customer check acceptable: ☐

NOTE Liability Limitation for loss or damage in this shipment may be applicable. See 49 U.S.C. § 14706(c)(1)(A) and (B).

RECEIVED, subject to individually determined rates or contracts that have been agreed upon in writing between the carrier and shipper, if applicable, otherwise to the rates, classifications and rules that have been established by the carrier and are available to the shipper, on request, and to all applicable state and federal regulations.

The carrier shall not make delivery of this shipment without payment of freight and all other lawful charges.

Shipper Signature

SHIPPER SIGNATURE / DATE

This is to certify that the above named materials are properly classified, packaged, marked and labeled, and are in proper condition for transportation according to the applicable regulations of the DOT.

8-5-05

Trailer Loaded:
☒ By Shipper
☐ By Driver

Freight Counted:
☐ By Shipper
☐ By Driver/pallets said to contain
☐ By Driver/Pieces

CARRIER SIGNATURE / PICKUP DATE

Carrier acknowledges receipt of packages and required placards. Carrier certifies emergency response information was made available and/or carrier has the DOT emergency response guidebook or equivalent documentation in the vehicle. *Property described above is received in good order, except as noted.*

D. Allison
8-5-05

FORM 540 — Envirocare of Utah, Inc.

UNIFORM LOW-LEVEL RADIOACTIVE WASTE MANIFEST

SHIPPING PAPER

1. EMERGENCY TELEPHONE NUMBER (Include Area Code): 1-800-424-9300

ORGANIZATION: Chemtrec

2. IS THIS AN "EXCLUSIVE USE" SHIPMENT? ☐ YES ☑ NO

3. TOTAL NUMBER OF PACKAGES IDENTIFIED ON THIS MANIFEST: 7

4. DOES EPA REGULATED WASTE REQUIRING A MANIFEST ACCOMPANY THIS SHIPMENT? ☐ YES ☑ NO
If "Yes," provide Manifest Number ======>

EPA MANIFEST NUMBER

5. SHIPPER -- NAME AND FACILITY
GTEOSI
140 Cantiague Rock RD
Hicksville, NY 11801

Utah Generator Site Access Permit No.: 020 500 1352

SHIPMENT NUMBER: CEFX-31022

CONTACT: Jean Agostinelli

6. CARRIER -- Name and Address
Priority Transport Services, Inc.
391 Anthony Street
Schenectady, NY 12308

CONTACT: Dispatch

SIGNATURE — Authorized carrier acknowledging waste receipt

SHIPPER I.D. NUMBER: 0840-01-976

☐ COLLECTOR
☐ PROCESSOR
☑ GENERATOR TYPE (Specify) 1

TELEPHONE NUMBER (Include Area Code): 516-932-0157

EPA I.D. NUMBER: NYR000104976

SHIPPING DATE: 05/11/2005

TELEPHONE (Include Area Code): 800-235-0069

DATE: 5-11-05

7. FORM 540 AND 540A — PAGE 1 OF 2 PAGE(S)
FORM 541 AND 541A — 4 PAGE(S)
FORM 542 AND 542A — None PAGE(S)
ADDITIONAL INFORMATION — None PAGE(S)

8. MANIFEST NUMBER (Use this number on all continuation pages): 0840-01-976

9. CONSIGNEE - Name and Facility
Envirocare of Utah, Inc.
Clive Disposal Site (Bulk Waste Facility)
Interstate 80, Exit 49
Clive, UT 84029

CONTACT: Shipping and Receiving

TELEPHONE (Include Area Code): (435)884-0155

SIGNATURE — Authorized consignee acknowledging waste receipt: 685148

DATE: 6-10-05

10. CERTIFICATION
This is to certify that the herein-named materials are properly classified, described, packaged, marked, and labeled and are in proper condition for transportation according to the applicable regulations of the Department of Transportation. This also certifies that the materials are classified, packaged, marked, and labeled and are in proper condition for transportation and disposal as described in accordance with the requirements of 10 CFR Parts 20 and 61, or equivalent state regulations.

AUTHORIZED SIGNATURE: [signature] TITLE: Broker DATE: 6-11-05

11. U.S. DEPARTMENT OF TRANSPORTATION DESCRIPTION (Including proper shipping name, hazard class, UN ID number, and any additional information)	12. DOT LABEL "RADIOACTIVE"	13. TRANSPORT INDEX	14. PHYSICAL AND CHEMICAL FORM	15. INDIVIDUAL RADIONUCLIDES				16. TOTAL PACKAGE ACTIVITY MBq	mCi	17. LSA/SCO CLASS	18. TOTAL WEIGHT OR VOLUME (Use appropriate units)	19. IDENTIFICATION NUMBER OF PACKAGE
Soil,DOT Non-Regulated, containing Radionuclides	NA	NA	Solid / OXIDES	Ac-227	Pa-231	Ra-223	Ra-226	1.8600E+00	5.0271E-02	NA	13720 LBS; 108.25 FT3	9130
				Ra-228	Th-227	Th-228	Th-230					
				Th-232	U-234	U-Nat						
Soil,DOT Non-Regulated, containing Radionuclides	NA	NA	Solid / OXIDES	Ac-227	Pa-231	Ra-223	Ra-226	4.1042E+00	1.1092E-01	NA	21970 LBS; 173.73 FT3	9144
				Ra-228	Th-227	Th-228	Th-230					
				Th-232	U-234	U-Nat						
Soil,DOT Non-Regulated, containing Radionuclides	NA	NA	Solid / OXIDES	Ac-227	Pa-231	Ra-223	Ra-226	2.5721E+00	6.9517E-02	NA	21380 LBS; 169.05 FT3	9145
				Ra-228	Th-227	Th-228	Th-230					
				Th-232	U-234	U-Nat						

FOR CONSIGNEE USE ONLY

___ Record Waste Description Inadequate
___ Contamination or Leakage Detected
___ Unexpected Exposure Rates Detected
___ Labels, Markings, etc. Inadequate
___ Container Integrity Inadequate
___ Other
✓ No Violations Detected on this Shipment

20. TERMS AND CONDITIONS

A. HAZARDOUS MATERIALS: Generator represents & warrants that Waste Material __ is (or) ✓ is not a hazardous waste as defined in 40 CFR 261. Where the material is a hazardous waste, this shipment is also accompanied by a separate and completed hazardous waste manifest, along with the appropriate land-disposal restriction notice and/or certification as required by 40 CFR 268.1.

B. TITLE: Upon acceptance at the disposal site by Envirocare of Utah, Inc., and all appropriate regulatory authorities, title to the Waste Material which conforms to Generator's representations herein shall thereupon transfer from Generator and be vested in Envirocare of Utah, Inc.

C. WASTE MATERIAL: Generator represents and warrants that all data set forth in this (UNIFORM LOW-LEVEL RADIOACTIVE WASTE MANIFEST) are true and correct in all respects and in accordance with all applicable governmental laws, rules, regulations and Envirocare of Utah Inc.'s facility license.

D. INDEMNIFICATION: Generator agrees to indemnify Envirocare of Utah, Inc., its officers, employees and agents against all losses and liability whatsoever if such losses or liability results from the failure of the Waste Material to conform in all material respects to the data supplied on the (UNIFORM LOW-LEVEL RADIOACTIVE WASTE MANIFEST.) or if this shipment fails to meet the standards prescribed by the Department of Transportation or any governmental agency having jurisdiction over such matters.

FORM 540 (04-03)

FORM 540 — **Envirocare of Utah, Inc.**

UNIFORM LOW-LEVEL RADIOACTIVE WASTE MANIFEST

SHIPPING PAPER

1. EMERGENCY TELEPHONE NUMBER (Include Area Code): 1-800-424-9300

ORGANIZATION: Chemtrec

2. IS THIS AN "EXCLUSIVE USE" SHIPMENT? ☐ YES ☑ NO

3. TOTAL NUMBER OF PACKAGES IDENTIFIED ON THIS MANIFEST =====> 7

4. DOES EPA REGULATED WASTE REQUIRING A MANIFEST ACCOMPANY THIS SHIPMENT? ☐ YES ☑ NO
If "Yes," provide Manifest Number =====>

EPA MANIFEST NUMBER

5. SHIPPER -- NAME AND FACILITY
GTEOSI
140 Cantiague Rock RD
Hicksville, NY 11801

SHIPPER I.D. NUMBER: 0840-01-976
☐ COLLECTOR
☐ PROCESSOR
☑ GENERATOR TYPE (Specify) I

Utah Generator Site Access Permit No.: 020 500 1352
SHIPMENT NUMBER: CEFX-31022

CONTACT: Jean Agostinelli
TELEPHONE NUMBER (Include Area Code): 516-932-9157

6. CARRIER -- Name and Address
Priority Transport Services, Inc.
391 Anthony Street
Schenectady, NY 12308

EPA I.D. NUMBER: NYR000104976
SHIPPING DATE: 05/11/2005

CONTACT: Dispatch
TELEPHONE (Include Area Code): 800-235-0069

SIGNATURE -- *Authorized carrier acknowledging waste receipt*
DATE: 5-11-05

7. FORM 540 AND 540A — PAGE 1 OF 2 PAGE(S)
FORM 541 AND 541A — 4 PAGE(S)
FORM 542 AND 542A — None PAGE(S)
ADDITIONAL INFORMATION — None PAGE(S)

8. MANIFEST NUMBER (Use this number on all continuation pages): 0840-01-976

9. CONSIGNEE - Name and Facility
Envirocare of Utah, Inc.
Clive Disposal Site (Bulk Waste Facility)
Interstate 80, Exit 49
Clive, UT 84029

CONTACT: Shipping and Receiving
TELEPHONE (Include Area Code): (435)884-0155

SIGNATURE -- *Authorized consignee acknowledging waste receipt*
DATE

10. CERTIFICATION
This is to certify that the herein-named materials are properly classified, described, packaged, marked, and labeled and are in proper condition for transportation according to the applicable regulations of the Department of Transportation. This also certifies that the materials are classified, packaged, marked, and labeled and are in proper condition for transportation and disposal as described in accordance with the requirements of 10 CFR Parts 20 and 61, or equivalent state regulations.

AUTHORIZED SIGNATURE: [signature] TITLE: Broker DATE: 5-11-05

11. U.S. DEPARTMENT OF TRANSPORTATION DESCRIPTION (Including proper shipping name, hazard class, UN ID number, and any additional information)	12. DOT LABEL "RADIOACTIVE"	13. TRANSPORT INDEX	14. PHYSICAL AND CHEMICAL FORM	15. INDIVIDUAL RADIONUCLIDES	16. TOTAL PACKAGE ACTIVITY MBq	16. TOTAL PACKAGE ACTIVITY mCi	17. LSA/SCO CLASS	18. TOTAL WEIGHT OR VOLUME (Use appropriate units)	19. IDENTIFICATION NUMBER OF PACKAGE
Soil,DOT Non-Regulated, containing Radionuclides	NA	NA	Solid / OXIDES	Ac-227 Pa-231 Ra-223 Ra-226 Ra-228 Th-227 Th-228 Th-230 Th-232 U-234 U-Nat	1.8600E+00	5.0271E-02	NA	13720 LBS; 108.25 FT3	9130
Soil,DOT Non-Regulated, containing Radionuclides	NA	NA	Solid / OXIDES	Ac-227 Pa-231 Ra-223 Ra-226 Ra-228 Th-227 Th-228 Th-230 Th-232 U-234 U-Nat	4.1042E+00	1.1092E-01	NA	21970 LBS; 173.73 FT3	9144
Soil,DOT Non-Regulated, containing Radionuclides	NA	NA	Solid / OXIDES	Ac-227 Pa-231 Ra-223 Ra-226 Ra-228 Th-227 Th-228 Th-230 Th-232 U-234 U-Nat	2.5721E+00	6.9517E-02	NA	21380 LBS; 169.05 FT3	9145

FOR CONSIGNEE USE ONLY

____ Record Waste Description Inadequate
____ Contamination or Leakage Detected
____ Unexpected Exposure Rates Detected
____ Labels, Markings, etc. Inadequate
____ Container Integrity Inadequate
____ Other
____ No Violations Detected on this Shipment

20. TERMS AND CONDITIONS

A. HAZARDOUS MATERIALS: Generator represents & warrants that Waste Material __ is (or) ✓ is not a hazardous waste as defined in 40 CFR 261. Where the material is a hazardous waste, this shipment is also accompanied by a separate and completed hazardous waste manifest, along with the appropriate land-disposal restriction notice and/or certification as required by 40 CFR 268.1.

B. TITLE: Upon acceptance at the disposal site by Envirocare of Utah, Inc., and all appropriate regulatory authorities, title to the Waste Material which conforms to Generator's representations herein shall thereupon transfer from Generator and be vested in Envirocare of Utah, Inc.

C. WASTE MATERIAL: Generator represents and warrants that all data set forth in this (UNIFORM LOW-LEVEL RADIOACTIVE WASTE MANIFEST) are true and correct in all respects and in accordance with all applicable governmental laws, rules, regulations and Envirocare of Utah Inc.'s facility license.

D. INDEMNIFICATION: Generator agrees to indemnify Envirocare of Utah, Inc., its officers, employees and agents against all losses and liability whatsoever if such losses or liability results from the failure of the Waste Material to conform in all material respects to the data supplied on the (UNIFORM LOW-LEVEL RADIOACTIVE WASTE MANIFEST,) or if this shipment fails to meet the standards prescribed by the Department of Transportation or any governmental agency having jurisdiction over such matters.

FORM 540A

Envirocare of Utah, Inc.

UNIFORM LOW-LEVEL RADIOACTIVE WASTE MANIFEST

SHIPPING PAPER (CONTINUATION)

8. MANIFEST NUMBER
(Use this number on all continuation pages)
0840-01-976

11. U.S. DEPARTMENT OF TRANSPORTATION DESCRIPTION (Including proper shipping name, hazard class, UN ID number, and any additional information)	12. DOT LABEL "RADIOACTIVE"	13. TRANSPORT INDEX	14. PHYSICAL AND CHEMICAL FORM	15. INDIVIDUAL RADIONUCLIDES				16. TOTAL PACKAGE ACTIVITY MBq	mCi	17. LSA/SCO CLASS	18. TOTAL WEIGHT OR VOLUME (Use appropriate units)	19. IDENTIFICATION NUMBER OF PACKAGE
Soil,DOT Non-Regulated, containing Radionuclides	NA	NA	Solid / OXIDES	Ac-227	Pa-231	Ra-223	Ra-226	9.0410E-01	2.4435E-02	NA	19460 LBS; 153.81 FT3	9151
				Ra-228	Th-227	Th-228	Th-230					
				Th-232	U-234	U-Nat						
Soil,DOT Non-Regulated, containing Radionuclides	NA	NA	Solid / OXIDES	Ac-227	Pa-231	Ra-223	Ra-226	1.2566E+00	3.3961E-02	NA	17920 LBS; 141.59 FT3	9165
				Ra-228	Th-227	Th-228	Th-230					
				Th-232	U-234	U-Nat						
Soil,DOT Non-Regulated, containing Radionuclides	NA	NA	Solid / OXIDES	Ac-227	Pa-231	Ra-223	Ra-226	2.5386E+00	6.8611E-02	NA	9680 LBS; 76.19 FT3	9210
				Ra-228	Th-227	Th-228	Th-230					
				Th-232	U-234	U-Nat						
Soil,DOT Non-Regulated, containing Radionuclides	NA	NA	Solid / OXIDES	Ac-227	Pa-231	Ra-223	Ra-226	1.6136E+00	4.3610E-02	NA	16440 LBS; 129.84 FT3	9217
				Ra-228	Th-227	Th-228	Th-230					
				Th-232	U-234	U-Nat						

FORM 541

Envirocare of Utah, Inc.

UNIFORM LOW-LEVEL RADIOACTIVE WASTE MANIFEST

CONTAINER AND WASTE DESCRIPTION

Additional Nuclear Regulatory Commission (NRC) Requirements for Control, Transfer and Disposal of Radioactive Waste

1. MANIFEST TOTALS

NUMBER OF PACKAGES/ DISPOSAL CONTAINERS	NET WASTE VOLUME		NET WASTE WEIGHT		SPECIAL NUCLEAR MATERIAL (grams) U-233	U-235	Pu	Total
7	m3	26.9708	kg	54435.6238	NP	NP	NP	NP
	ft3	952.4600	ton	60.0050				

ACTIVITY	ALL NUCLIDES	TRITIUM	C-14	Tc-99	I-129	SOURCE (kg)	
MBq	1.4549E+01	NP	NP	NP	NP	(kg)	4.9198E-01
mCi	3.9320E-01	NP	NP	NP	NP	(tons)	5.4232E-04

2. MANIFEST NUMBER 0840-01-976

3. PAGE 1 OF 4 PAGE(S)

4. SHIPPER NAME GTEOSI

SHIPMENT ID NUMBER 0840-01-976

5. CONTAINER IDENTIFICATION NUMBER/ GENERATOR ID NUMBER(S)	6. CONTAINER DESCRIPTION (See Note 1 & Note 1A)	7. VOLUME (m3)/(ft3)	8. WASTE AND CONTAINER WEIGHT (kg)/(ton)	9. SURFACE RADIATION LEVEL (mSv/hr)/(mrem/hr)	10. SURFACE CONTAMINATION (MBq/100 cm2)/(dpm/100cm2) ALPHA	BETA-GAMMA	11. WASTE DESCRIPTOR (See Note 2 & Note 2A)	12. APPROXIMATE WASTE VOLUME(S) IN CONTAINER (m3)/(FT3)	13. SOLIDIFICATION OR STABILIZATION MEDIA (See Note 3)	14. CHEMICAL DESCRIPTION: CHEMICAL FORM/ CHELATING AGENT	WEIGHT % CHELATING AGENT IF > 0.1%	15. RADIOLOGICAL DESCRIPTION: RADIONUCLIDES		pCi/gm	MBq	mCi	16. WASTE CLASSIFICATION AS-Class A Stable AU-Class A Unstable B-Class B C-Class C
9130/GTEOSI	19 Strong Tight Container Loaded in Gondola	3.0653	6223.2877	0.0001	<3.6740E-06	<3.6740E-05	22,59-CONCRETE,59 -MISC DEBRIS-HJ	3.0653	100	OXIDES/NONE	0.00	Ac-227		5.28400E-02	(1.2107E-02)	(3.2722E-04)	AU
		108.2500	6.8600	0.0100	<2.2000E+02	<2.2000E+03		108.2500				Pa-231		2.47500E-01	5.6710E-02	1.5327E-03	
												Ra-223		1.03200E-01	2.3646E-02	6.3907E-04	
												Ra-226		2.36168E-01	5.4113E-02	1.4625E-03	
												Ra-228		7.83404E-01	1.7950E-01	4.8513E-03	
												Th-227	[1.0555E-14 kg]	5.28400E-02	(1.2107E-02)	(3.2722E-04)	
												Th-228	[6.8276E-12 kg]	9.04083E-01	2.0715E-01	5.5986E-03	
												Th-230	[1.2085E-07 kg]	4.09806E-01	9.3899E-02	2.5378E-03	
												Th-232	[4.4103E-02 kg]	7.83404E-01	1.7950E-01	4.8513E-03	
												U-234	[1.7801E-06 kg]	1.78221E+00	4.0833E-01	1.1036E-02	
												U-Nat	[2.4094E-02 kg]	2.76250E+00	6.3296E-01	1.7107E-02	
												Subtotal			1.8358E+00	4.9616E-02	
												Total			1.8358E+00	4.9616E-02	
												Source	[6.8199E-02 kg]				
9144/GTEOSI	19 Strong Tight Container Loaded in Gondola	4.9195	9965.4250	0.0001	<3.6740E-06	<3.6740E-05	22,59-CONCRETE,59 -MISC DEBRIS-HJ	4.9195	100	OXIDES/NONE	0.00	Ac-227		7.05200E-02	2.5931E-02	7.0083E-04	AU
		173.7300	10.9850	0.0100	<2.2000E+02	<2.2000E+03		173.7300				Pa-231		2.28100E-01	(8.3875E-02)	(2.2669E-03)	
												Ra-223		5.57300E-02	(2.0492E-02)	(5.5385E-04)	
												Ra-226		2.26222E-01	8.3183E-02	2.2482E-03	
												Ra-228		6.62270E-01	2.4352E-01	6.5817E-03	
												Th-227	[2.2608E-14 kg]	7.05200E-02	2.5931E-02	7.0083E-04	
												Th-228	[9.0682E-12 kg]	7.48226E-01	2.7513E-01	7.4359E-03	
												Th-230	[1.6395E-07 kg]	3.46440E-01	1.2739E-01	3.4429E-03	
												Th-232	[5.9833E-02 kg]	6.62270E-01	2.4352E-01	6.5817E-03	

Note 1: Container Description Codes. For containers/ waste requiring disposal in approved structural over-packs the numerical code must be followed by "-OP."

1. Wooden Box or Crate
2. Metal Box
3. Plastic Drum or Pail
4. Metal Drum or Pail
5. Metal Tank or Liner
6. Concrete Tank or Liner
7. Polyethlene Tank or Liner
8. Fiberglass Tank or Liner
9. Demineralizer
10. Gas Cylinder
11. Bulk, Unpackaged Waste
12. Unpackaged Components
13. High Integrity Container
19. Other. Describe in Item 6, or additional page

Note 1A: Bulk Packaging Description Codes. (Choose one code as may be applicable.)

A Gondola
B Intermodal
C End-Dump
D Roll-off
E Seavan

NOTE 2: Waste Descriptor Codes. (Choose up to three which predominate by volume.)

20. Charcoal
21. Incinerator Ash
22. Soil
23. Gas
24. Oil
25. Aqueous Liquid
26. Filter Media
27. Mechanical Filter
28. EPA or State Hazardous
29. Demolition Rubble
30. Cation Ion-exchange Media
31. Anion Ion-exchange Media
32. Mixed Bed Ion-exchange Media
33. Contaminated Equipment
34. Organic Liquid (except oil)
35. Glassware or Labware
36. Sealed Source/Device
37. Paint or Plating
38. Evaporator Bottoms/Sludges/ Concentrates
39. Compactible Trash
40. Noncompactible Trash
41. Animal Carcass
42. Biological Material (except animal carcass)
43. Activated Material
59. Other. Describe in item 11, or additional page

NOTE 2A: Specific Waste Descriptions (Choose all applicable codes.)

G Dewatered
H Solid
I Combustible
J Non-combustible
K Air Filtration Filters
L Asbestos

Note3: Solidification and Stabilization Media Codes. (Choose up to three which predominate by volume.) For media meeting disposal site structural stability requirements, the numerical code must be followed by "-S." and the media vendor and brand name must also be identified in Item 13. Code 100=NONE REQUIRED.

Solidification

90. Cement
91. Concrete (encapsulation)
92. Bitumen
93. Vinyl Chloride
94. Vinyl Ester Styrene
99. Other. Describe in item 13, or additional page
100. None Required.

FORM 541A

UNIFORM LOW-LEVEL RADIOACTIVE WASTE MANIFEST

CONTAINER AND WASTE DESCRIPTION (CONTINUATION)

Envirocare of Utah, Inc.

2. MANIFEST NUMBER 0840-01-976

DISPOSAL CONTAINER DESCRIPTION							WASTE DESCRIPTION FOR EACH WASTE TYPE IN CONTAINER									
							PHYSICAL DESCRIPTION			14. CHEMICAL DESCRIPTION		15. RADIOLOGICAL DESCRIPTION				16. WASTE CLASSIFICATION AS-Class A Stable AU-Class A Unstable B-Class B C-Class C
5. CONTAINER IDENTIFICATION NUMBER/ GENERATOR ID NUMBER(S)	6. CONTAINER DESCRIPTION (See Note 1 & Note 1A)	7. VOLUME (m3)/(ft3)	8. WASTE AND CONTAINER WEIGHT (kg)/(ton)	9. SURFACE RADIATION LEVEL (mSv/hr)/(mrem/hr)	10. SURFACE CONTAMINATION (MBq/100 cm2)/(dpm/100cm2) ALPHA	BETA-GAMMA	11. WASTE DESCRIPTOR (See Note 2 & Note 2A)	12. APPROXIMATE WASTE VOLUME(S) IN CONTAINER (m3)/(FT3)	13. SOLIDIFICATION OR STABILIZATION MEDIA (See Note 3)	CHEMICAL FORM/ CHELATING AGENT	WEIGHT % CHELATING AGENT IF > 0.1%	INDIVIDUAL RADIONUCLIDES AND ACTIVITY (MBq) AND CONTAINER TOTAL; OR CONTAINER TOTAL ACTIVITY AND RADIONUCLIDE PERCENT: RADIONUCLIDES	pCi/gm	MBq	mCi	
												U-234 [4.8509E-06 kg]	3.02629E+00	1.1128E+00	3.0076E-02	
												U-Nat [7.0894E-02 kg]	5.06488E+00	1.8624E+00	5.0335E-02	
												Subtotal		3.9998E+00	1.0810E-01	
												Total		3.9998E+00	1.0810E-01	
												Source [1.3073E-01 kg]				
9145/GTEOSI	19 Strong Tight Container Loaded in Gondola	4.7870	9697.8055	0.0001	<3.6740E-06	<3.6740E-05	22,59-CONCRETE,59 -MISC DEBRIS-HJ	4.7870	100	OXIDES/NONE	0.00	Ac-227	6.89400E-02	2.4666E-02	6.6666E-04	AU
												Pa-231	1.77800E-01	(6.3618E-02)	(1.7194E-03)	
												Ra-223	3.92400E-02	(1.4040E-02)	(3.7946E-04)	
		169.0500	10.6900	0.0100	<2.2000E+02	<2.2000E+03		169.0500				Ra-226	2.12210E-01	7.5928E-02	2.0521E-03	
												Ra-228	5.04823E-01	1.8062E-01	4.8817E-03	
												Th-227 [2.1505E-14 kg]	6.89400E-02	2.4666E-02	6.6666E-04	
												Th-228 [7.8334E-12 kg]	6.64247E-01	2.3767E-01	6.4234E-03	
												Th-230 [1.2160E-07 kg]	2.64078E-01	9.4487E-02	2.5537E-03	
												Th-232 [4.4379E-02 kg]	5.04823E-01	1.8062E-01	4.8817E-03	
												U-234 [2.7299E-06 kg]	1.75024E+00	6.2623E-01	1.6925E-02	
												U-Nat [3.9953E-02 kg]	2.93341E+00	1.0496E+00	2.8367E-02	
												Subtotal		2.4945E+00	6.7418E-02	
												Total		2.4945E+00	6.7418E-02	
												Source [8.4335E-02 kg]				
9151/GTEOSI	19 Strong Tight Container Loaded in Gondola	4.3554	8826.9081	0.0001	<3.6740E-06	<3.6740E-05	22,59-CONCRETE,59 -MISC DEBRIS-HJ	4.3554	100	OXIDES/NONE	0.00	Ac-227	9.27900E-02	3.0208E-02	8.1642E-04	AU
												Pa-231	3.35500E-01	1.0922E-01	2.9519E-03	
												Ra-223	3.72300E-02	(1.2120E-02)	(3.2757E-04)	
		153.8100	9.7300	0.0100	<2.2000E+02	<2.2000E+03		153.8100				Ra-226	1.03310E-01	3.3632E-02	9.0897E-04	
												Ra-228	3.39858E-01	1.1064E-01	2.9903E-03	
												Th-227 [2.6336E-14 kg]	9.27900E-02	3.0208E-02	8.1642E-04	
												Th-228 [4.2574E-12 kg]	3.96778E-01	1.2917E-01	3.4911E-03	
												Th-230 [7.4487E-08 kg]	1.77783E-01	5.7875E-02	1.5642E-03	
												Th-232 [2.7184E-02 kg]	3.39858E-01	1.1064E-01	2.9903E-03	
												U-234 [4.1813E-07 kg]	2.94637E-01	9.5919E-02	2.5924E-03	
												U-Nat [7.0220E-03 kg]	5.66647E-01	1.8447E-01	4.9857E-03	
												Subtotal		8.9198E-01	2.4108E-02	
												Total		8.9198E-01	2.4108E-02	

FORM 541A

UNIFORM LOW-LEVEL RADIOACTIVE WASTE MANIFEST

CONTAINER AND WASTE DESCRIPTION (CONTINUATION)

Envirocare of Utah, Inc.

2. MANIFEST NUMBER 0840-01-976

DISPOSAL CONTAINER DESCRIPTION							WASTE DESCRIPTION FOR EACH WASTE TYPE IN CONTAINER									
							PHYSICAL DESCRIPTION			14. CHEMICAL DESCRIPTION		15. RADIOLOGICAL DESCRIPTION				16. WASTE CLASSIFICATION AS-Class A Stable AU-Class A Unstable B-Class B C-Class C
5. CONTAINER IDENTIFICATION NUMBER/ GENERATOR ID NUMBER(S)	6. CONTAINER DESCRIPTION (See Note 1 & Note 1A)	7. VOLUME (m3)/(ft3)	8. WASTE AND CONTAINER WEIGHT (kg)/(ton)	9. SURFACE RADIATION LEVEL (mSv/hr)/(mrem/hr)	10. SURFACE CONTAMINATION (MBq/100 cm2)/(dpm/100cm2) ALPHA	BETA-GAMMA	11. WASTE DESCRIPTOR (See Note 2 & Note 2A)	12. APPROXIMATE WASTE VOLUME(S) IN CONTAINER (m3)/(FT3)	13. SOLIDIFICATION OR STABILIZATION MEDIA (See Note 3)	CHEMICAL FORM/ CHELATING AGENT	WEIGHT % CHELATING AGENT IF > 0.1%	INDIVIDUAL RADIONUCLIDES AND ACTIVITY (MBq) AND CONTAINER TOTAL; OR CONTAINER TOTAL ACTIVITY AND RADIONUCLIDE PERCENT: RADIONUCLIDES	pCi/gm	MBq	mCi	
												Source [3.4207E-02 kg]				
9165/GTEOSI	19 Strong Tight Container Loaded in Gondola	4.0094	8128.3758	0.0001	<3.6740E-06	<3.6740E-05	22,59-CONCRETE,59 -MISC DEBRIS-HJ	4.0094	100	OXIDES/NONE	0.00	Ac-227	5.31800E-02	(1.5937E-02)	(4.3072E-04)	AU
												Pa-231	3.20700E-01	9.6108E-02	2.5975E-03	
												Ra-223	5.42000E-02	(1.6243E-02)	(4.3899E-04)	
		141.5900	8.9600	0.0070	<2.2000E+02	<2.2000E+03		141.5900				Ra-226	1.43095E-01	4.2883E-02	1.1590E-03	
												Ra-228	4.63262E-01	1.3883E-01	3.7521E-03	
												Th-227 [1.3894E-14 kg]	5.31800E-02	(1.5937E-02)	(4.3072E-04)	
												Th-228 [4.1456E-12 kg]	4.19714E-01	1.2578E-01	3.3994E-03	
												Th-230 [9.3466E-08 kg]	2.42337E-01	7.2624E-02	1.9628E-03	
												Th-232 [3.4110E-02 kg]	4.63262E-01	1.3883E-01	3.7521E-03	
												U-234 [9.2455E-07 kg]	7.07734E-01	2.1209E-01	5.7322E-03	
												U-Nat [1.4515E-02 kg]	1.27237E+00	3.8129E-01	1.0305E-02	
												Subtotal		1.2084E+00	3.2660E-02	
												Total		1.2084E+00	3.2660E-02	
												Source [4.8626E-02 kg]				
9210/GTEOSI	19 Strong Tight Container Loaded in Gondola	2.1575	4390.7744	0.0001	<3.6740E-06	<3.6740E-05	22,59-CONCRETE,59 -MISC DEBRIS-HJ	2.1575	100	OXIDES/NONE	0.00	Ac-227	1.33400E-01	2.1512E-02	5.8141E-04	AU
												Pa-231	3.79800E-01	6.1246E-02	1.6553E-03	
												Ra-223	5.37700E-02	(8.6710E-03)	(2.3435E-04)	
		76.1900	4.8400	0.0060	<2.2000E+02	<2.2000E+03		76.1900				Ra-226	2.27528E-01	3.6691E-02	9.9166E-04	
												Ra-228	5.54894E-01	8.9485E-02	2.4185E-03	
												Th-227 [1.8755E-14 kg]	1.33400E-01	2.1512E-02	5.8141E-04	
												Th-228 [3.9971E-12 kg]	7.52018E-01	1.2127E-01	3.2776E-03	
												Th-230 [6.0244E-08 kg]	2.90270E-01	4.6809E-02	1.2651E-03	
												Th-232 [2.1986E-02 kg]	5.54894E-01	8.9485E-02	2.4185E-03	
												U-234 [3.4214E-06 kg]	4.86711E+00	7.8488E-01	2.1213E-02	
												U-Nat [4.7852E-02 kg]	7.79522E+00	1.2571E+00	3.3975E-02	
												Subtotal		2.5300E+00	6.8377E-02	
												Total		2.5300E+00	6.8377E-02	
												Source [6.9841E-02 kg]				

FORM 541A

UNIFORM LOW-LEVEL RADIOACTIVE WASTE MANIFEST

CONTAINER AND WASTE DESCRIPTION (CONTINUATION)

Envirocare of Utah, Inc.

2. MANIFEST NUMBER 0840-01-976

DISPOSAL CONTAINER DESCRIPTION							WASTE DESCRIPTION FOR EACH WASTE TYPE IN CONTAINER									
							PHYSICAL DESCRIPTION			14. CHEMICAL DESCRIPTION		15. RADIOLOGICAL DESCRIPTION				16. WASTE CLASSIFICATION AS-Class A Stable AU-Class A Unstable B-Class B C-Class C
5. CONTAINER IDENTIFICATION NUMBER/ GENERATOR ID NUMBER(S)	6. CONTAINER DESCRIPTION (See Note 1 & Note 1A)	7. VOLUME (m3) / (ft3)	8. WASTE AND CONTAINER WEIGHT (kg) / (ton)	9. SURFACE RADIATION LEVEL (mSv/hr) / (mrem/hr)	10. SURFACE CONTAMINATION (MBq/100 cm2) / (dpm/100cm2) ALPHA	BETA-GAMMA	11. WASTE DESCRIPTOR (See Note 2 & Note 2A)	12. APPROXIMATE WASTE VOLUME(S) IN CONTAINER (m3) / (FT3)	13. SOLIDIFICATION OR STABILIZATION MEDIA (See Note 3)	CHEMICAL FORM/ CHELATING AGENT	WEIGHT % CHELATING AGENT IF > 0.1%	INDIVIDUAL RADIONUCLIDES AND ACTIVITY (MBq) AND CONTAINER TOTAL; OR CONTAINER TOTAL ACTIVITY AND RADIONUCLIDE PERCENT: RADIONUCLIDES	pCi/gm	MBq	mCi	
9217/GTEOSI	19 Strong Tight Container Loaded in Gondola	3.6767	7457.0591	0.0001	<3.6740E-06	<3.6740E-05	22,59-CONCRETE,59 -MISC DEBRIS-HJ	3.6767	100	OXIDES/NONE	0.00	Ac-227	4.63300E-02	(1.2732E-02)	(3.4411E-04)	AU
		129.8400	8.2200	0.0070	<2.2000E+02	<2.2000E+03		129.8400				Pa-231	2.35700E-01	6.4776E-02	1.7507E-03	
												Ra-223	8.73800E-02	2.4013E-02	6.4901E-04	
												Ra-226	1.65165E-01	4.5392E-02	1.2268E-03	
												Ra-228	4.78582E-01	1.3152E-01	3.5546E-03	
												Th-227 [1.1100E-14 kg]	4.63300E-02	(1.2732E-02)	(3.4411E-04)	
												Th-228 [5.1807E-12 kg]	5.71960E-01	1.5718E-01	4.2482E-03	
												Th-230 [8.8546E-08 kg]	2.50351E-01	6.8802E-02	1.8595E-03	
												Th-232 [3.2315E-02 kg]	4.78582E-01	1.3152E-01	3.5546E-03	
												U-234 [1.4893E-06 kg]	1.24320E+00	3.4165E-01	9.2338E-03	
												U-Nat [2.3726E-02 kg]	2.26796E+00	6.2327E-01	1.6845E-02	
												Subtotal		1.5881E+00	4.2922E-02	
												Total		1.5881E+00	4.2922E-02	
												Source [5.6042E-02 kg]				
Shipment Totals		26.9708	54689.6356									Source [4.9198E-01 kg]		1.4549E+01	3.9320E-01	
		952.4600	60.2850													

Envirocare of Utah, Inc.

ADDITIONAL NOTES

Manifest Number
0840-01-976
PAGE 1

New York State Waste Transporter Part 364 permit No. 4A-288
New York State Waste Transporter Part 381 permit Number 4A-288

UNIFORM LOW-LEVEL RADIOACTIVE WASTE MANIFEST
ISOTOPES REPORT

For Manifest # 0840-01-976
Envirocare of Utah, Inc.

	Total Activity		
Isotope	**(MBq)**	**(mCi)**	**(Ci)**
Ac-227	1.4309E-01	3.8674E-03	3.8674E-06
Pa-231	5.3555E-01	1.4474E-02	1.4474E-05
Ra-223	1.1922E-01	3.2223E-03	3.2223E-06
Ra-226	3.7182E-01	1.0049E-02	1.0049E-05
Ra-228	1.0741E+00	2.9030E-02	2.9030E-05
Th-227	1.4309E-01	3.8674E-03	3.8674E-06
Th-228	1.2533E+00	3.3874E-02	3.3874E-05
Th-230	5.6188E-01	1.5186E-02	1.5186E-05
Th-232	1.0741E+00	2.9030E-02	2.9030E-05
U-234	3.5819E+00	9.6808E-02	9.6808E-05
U-Nat	5.9910E+00	1.6192E-01	1.6192E-04

BagNum	MANIFEST GROSS WEIGHT
9217	16440

Shipment Survey

Survey Number: GTEOSI-05-00316 Date: 1-27-05 Time: 13:40

Waste Container Type: (Super Sack) Intermodal Other: Waste

Waste Container ID #: 9217 Storage Bin: 43-C Gross Weight: 16440 lbs

	Ludlum 3030		Ludlum 3030		Ludlum 3030		Ludlum Mod. 19
Serial #	190646		191265				193615
Probe #	N/A		N/A		N/A		N/A
Calibration Due Date:	12-13-05		4-20-05				19 May 05
	α	β	α	β	α	β	
Background	0 cpm	25 cpm	0 cpm	25 cpm	cpm	cpm	5 μR/hr
Efficiency	29 %	25 %	29 %	25 %	%	N/A %	
MDA	25 dpm	130 dpm	25 dpm	130 dpm	dpm	dpm	

Maximum Contact Dose Rate: 0.007 mrem/hr Transport Index: 0.0 mrem/hr

	α cpm	α dpm/100 cm2	β cpm	β dpm/100 cm2
ALARA Limit	N/A	60	N/A	500
Smear #				
1	0	<MDA	36	<MDA
2	0		21	
3	0		38	
4	0		24	
5	1		31	
6	0	<MDA	27	<MDA

Smear Locations: 1 - Bottom 2 - Front 3 - Right Side 4 - Back 5 - Left Side 6 - Top

George Economos — George Economos

Surveyor Name — Surveyor Signature

Supervisor Approval

24960-S-SHEET9217-99.9

Date: 01/27/05 Time:1323

1-27-05 14:37 Bag# 9217

16440 lb GR

012705 1437 9217 0016440

NYSDEC:V00089-1; URS27010-039

BagNum	MANIFEST GROSS WEIGHT
9210	9680

Shipment Survey

Survey Number: GTEOSI-05-00308 Date: 1-26-05 Time: 1030

Waste Container Type: Super Sack Intermodal Other: WASTE

Waste Container ID #: 9210 Storage Bin: 37 Gross Weight: 9680 lbs

	Ludlum 3030		Ludlum 3030		Ludlum 3030		L-19
Serial #	190646		191265				193615
Probe #	N/A		N/A		N/A		N/A
Calibration Due Date:	12-13-05		4-20-05				5-19-05
	α	β	α	β	α	β	
Background	0 cpm	25 cpm	0 cpm	25 cpm	cpm	cpm	5 μR/hr
Efficiency	29 %	25 %	29 %	25 %	%	N/A %	
MDA	25 dpm	130 dpm	25 dpm	130 dpm	dpm	dpm	

Maximum Contact Dose Rate: .006 mrem/hr Transport Index: ~~.01~~ 0 mrem/hr SMM 1-26-05

	α cpm	α dpm/100 cm2	β cpm	β dpm/100 cm2
ALARA Limit	N/A	60	N/A	500
Smear #				
1	0	<MDA	34	<MDA
2	2		32	
3	1		28	
4	2		36	
5	1		25	
6	3		35	

Smear Locations: 1 - Bottom 2 - Front 3 - Right Side 4 - Back 5 - Left Side 6 - Top

JOHN MITCHELL SR
Surveyor Name

John M Mitchell Sr.
Surveyor Signature

Supervisor Approval

24655-S-SHEET9210-99.9
Date: 01/20/05 Time:1200

1-25-05 12:25 Bag# 9210
9680 lb GR
012505 1225 9210 0009680

BagNum	MANIFEST GROSS WEIGHT
9165	17920

Shipment Survey

Survey Number: GTEOSI-05-00314 Date: 1-27-05 Time: 10:55

Waste Container Type: Super Sack Intermodal Other: Waste

Waste Container ID #: 9165 Storage Bin: 43C Gross Weight: 17920 lbs

	Ludlum 3030		Ludlum 3030		Ludlum 3030		Ludlum Mod. 19
Serial #	190646		191265				193615
Probe #	N/A		N/A		N/A		N/A
Calibration Due Date:	12-13-05		4-20-05				19 May 05
	α	β	α	β	α	β	
Background	0 cpm	25 cpm	0 cpm	25 cpm	cpm	cpm	5 μR/hr
Efficiency	29 %	25 %	29 %	25 %	%	N/A %	
MDA	25 dpm	130 dpm	25 dpm	130 dpm	dpm	dpm	

Maximum Contact Dose Rate: 0.007 mrem/hr Transport Index: 0.0 mrem/hr

	α cpm	α dpm/100 cm2	β cpm	β dpm/100 cm2
ALARA Limit	N/A	60	N/A	500
Smear #				
1	1	<MDA	24	<MDA
2	0		36	
3	0		26	
4	0		29	
5	0		31	
6	1	<MDA	27	<MDA

Smear Locations: 1 - Bottom 2 - Front 3 - Right Side 4 - Back 5 - Left Side 6 - Top

George Economos
Surveyor Name

George Economos
Surveyor Signature

Supervisor Approval

22904-S-09G199165-99.9
Date: 12/13/04 Time:1002

1-27-05 11:55 Bag# 9165
17920 lb GR
012705 1155 9165 0017920

Shipment Survey

Survey Number: GTE051-04-7584 Date: 10.27.04 Time: 1553

Waste Container Type: Super Sack Intermodal Other: N/A

Waste Container ID #: 9130 Storage Bin: 40 Gross Weight: 13720 lbs

	Ludlum 3030		Ludlum 3030		Ludlum 3030		L-19
Serial #	190641		191265				196117
Probe #	N/A		N/A		N/A		N/A
Calibration Due Date:	3-4-05		4-20-05				8.10.05
	α	β	α	β	α	β	
Background	0 cpm	25 cpm	0 cpm	25 cpm	cpm	cpm	6 μR/hr
Efficiency	29 %	25 %	29 %	25 %	N/A %	N/A %	
MDA	25 dpm	130 dpm	25 dpm	130 dpm	dpm	dpm	

Maximum Contact Dose Rate: 0.010 mrem/hr Transport Index: 0 mrem/hr

	α cpm	α dpm/100 cm2	β cpm	β dpm/100 cm2
ALARA Limit	N/A	60	N/A	500
Smear #				
1	0	<MDA	25	<MDA
2	0		26	
3	0		35	
4	1		28	
5	1		33	
6	0		19	

Smear Locations: 1 - Bottom 2 - Front 3 - Right Side 4 - Back 5 - Left Side 6 - Top

S. Eckert
Surveyor Name

Surveyor Signature

Supervisor Approval

19988-S-SHEET9130-99.9
Date: 10/28/04 Time:1657

10-27-04 15:53 Bag# 9130
13720 lb GR
102704 1553 9130 0013720

Shipment Survey

Survey Number: GTEOSI-04-7571 Date: 10-7-04 Time: 1530

Waste Container Type: Super Sack Intermodal Other: N/A

Waste Container ID #: 9144 Storage Bin: 37 Gross Weight: 21970 lbs

	Ludlum 3030		Ludlum 3030		Ludlum 3030		Ludlum 19
Serial #	190641		191265				193615
Probe #	N/A		N/A		N/A		N/A
Calibration Due Date:	3-4-05		4-20-05				5-19-05
	α	β	α	β	α	β	
Background	0 cpm	25 cpm	0 cpm	25 cpm	cpm	cpm	6 μR/hr
Efficiency	29 %	25 %	29 %	25 %	N/A %	N/A %	
MDA	25 dpm	130 dpm	25 dpm	130 dpm	dpm	dpm	

Maximum Contact Dose Rate: 0.010 mrem/hr Transport Index: 0 mrem/hr

	α cpm	α dpm/100 cm2	β cpm	β dpm/100 cm2
ALARA Limit	N/A	60	N/A	500
Smear #				
1	0	<MDA	21	<MDA
2	0		14	
3	0		33	
4	1		29	
5	0		27	
6	0		25	

Smear Locations: 1 - Bottom 2 - Front 3 - Right Side 4 - Back 5 - Left Side 6 - Top

S. Eckert
Surveyor Name

Surveyor Signature

George Economos
Supervisor Approval

18502-S-LPH169144-02.0
Date: 10/07/04 Time:1332

10-07-04 15:30 Bag# 9144
21970 lb GR
100704 1530 9144 0021970

NYSDEC:V00089-1; URS27010-039

Shipment Survey

Survey Number: GTEOSI-04-7572 Date: 10-7-04 Time: 1538

Waste Container Type: Super Sack Intermodal Other: N/A

Waste Container ID #: 9145 Storage Bin: 37 Gross Weight: 21380 lbs

	Ludlum 3030		Ludlum 3030		Ludlum 3030		Ludlum 19
Serial #	190641		191265				193615
Probe #	N/A		N/A		N/A		N/A
Calibration Due Date:	3-4-05		4-20-05				5-19-05
	α	β	α	β	α	β	
Background	0 cpm	25 cpm	0 cpm	25 cpm	cpm	cpm	6 μR/hr
Efficiency	29 %	25 %	29 %	25 %	N/A %	N/A %	
MDA	25 dpm	130 dpm	25 dpm	130 dpm	dpm	dpm	

Maximum Contact Dose Rate: 0.010 mrem/hr Transport Index: 0 mrem/hr

	α cpm	α dpm/100 cm2	β cpm	β dpm/100 cm2
ALARA Limit	N/A	60	N/A	500
Smear #				
1	0	<MDA	25	<MDA
2	0		19	
3	1		30	
4	0		26	
5	0		30	
6	6		28	

Smear Locations: 1 - Bottom 2 - Front 3 - Right Side 4 - Back 5 - Left Side 6 - Top

S. ECKERT
Surveyor Name

Surveyor Signature

Supervisor Approval

18503-S-LPH169145-04.0
Date: 10/07/04 Time:1336

10-07-04 15:38 Bag# 9145
21380 lb GR
100704 1538 9145 0021380

NYSDEC:V00089-1; URS27010-039

Shipment Survey

Survey Number: GTEOSI-04-7585 Date: 10-27-04 Time: 1601

Waste Container Type: Super Sack Intermodal Other: N/A

Waste Container ID #: 9151 Storage Bin: 40 Gross Weight: 19460 lbs

	Ludlum 3030		Ludlum 3030		Ludlum 3030		L-19
Serial #	190641		191265				196117
Probe #	N/A		N/A		N/A		N/A
Calibration Due Date:	3-4-05		4-20-05				8-10-05
	α	β	α	β	α	β	
Background	0 cpm	25 cpm	0 cpm	25 cpm	cpm	cpm	6 μR/hr
Efficiency	29 %	25 %	29 %	25 %	N/A %	N/A %	
MDA	25 dpm	130 dpm	25 dpm	130 dpm	dpm	dpm	

Maximum Contact Dose Rate: .010 mrem/hr Transport Index: 0 mrem/hr

	α cpm	α dpm/100 cm2	β cpm	β dpm/100 cm2
ALARA Limit	N/A	60	N/A	500
Smear #				
1	0	<MDA	29	<MDA
2	0		28	
3	0		36	
4	1		33	
5	0		27	
6	0		30	

Smear Locations: 1 - Bottom 2 - Front 3 - Right Side 4 - Back 5 - Left Side 6 - Top

S. Eckert
Surveyor Name

Surveyor Signature

John Mitchell, Jr.
Supervisor Approval

19763-S-U01XX9151-99.9
Date: 10/26/04 Time:1540

10-27-04 16:01 Bag# 9151
19460 lb GR
102704 1601 9151 0019460

FORM 540 — Envirocare of Utah, Inc.

UNIFORM LOW-LEVEL RADIOACTIVE WASTE MANIFEST

SHIPPING PAPER

1. EMERGENCY TELEPHONE NUMBER (Include Area Code): 1-800-424-9300

ORGANIZATION: Chemtrec

2. IS THIS AN "EXCLUSIVE USE" SHIPMENT? ☐ YES ☑ NO

3. TOTAL NUMBER OF PACKAGES IDENTIFIED ON THIS MANIFEST ====> 7

4. DOES EPA REGULATED WASTE REQUIRING A MANIFEST ACCOMPANY THIS SHIPMENT? ☐ YES ☑ NO
If "Yes," provide Manifest Number ====>

EPA MANIFEST NUMBER

5. SHIPPER -- NAME AND FACILITY
GTEOSI
140 Cantiague Rock RD
Hicksville, NY 11801

Utah Generator Site Access Permit No.: 029 800 1352

SHIPMENT NUMBER: CEFX-31022

CONTACT: Jean Agostinelli

6. CARRIER -- Name and Address
Priority Transport Services, Inc.
391 Anthony Street
Schenectady, NY 12308

CONTACT: Dispatch

SIGNATURE -- Authorized carrier acknowledging waste receipt

SHIPPER I.D. NUMBER: 0840-01-976

☐ COLLECTOR
☐ PROCESSOR
☑ GENERATOR TYPE (Specify) I

TELEPHONE NUMBER (Include Area Code): 516-832-9157

EPA I.D. NUMBER: NYR000164976

SHIPPING DATE: 05/11/2005

TELEPHONE (Include Area Code): 800-235-0669

DATE: 5-11-05

7. FORM 540 AND 540A — PAGE 1 OF 2 PAGE(S)
FORM 541 AND 541A — 4 PAGE(S)
FORM 542 AND 542A — None PAGE(S)
ADDITIONAL INFORMATION — None PAGE(S)

8. MANIFEST NUMBER (Use this number on all continuation pages): 0840-01-976

9. CONSIGNEE - Name and Facility
Envirocare of Utah, Inc.
Clive Disposal Site (Bulk Waste Facility)
Interstate 80, Exit 49
Clive, UT 84029

CONTACT: Shipping and Receiving

TELEPHONE (Include Area Code): (435)884-0155

SIGNATURE -- Authorized consignee acknowledging waste receipt: 68548

DATE: 6-10-05

10. CERTIFICATION

This is to certify that the herein-named materials are properly classified, described, packaged, marked, and labeled and are in proper condition for transportation according to the applicable regulations of the Department of Transportation. This also certifies that the materials are classified, packaged, marked, and labeled and are in proper condition for transportation and disposal as described in accordance with the requirements of 10 CFR Parts 20 and 61, or equivalent state regulations.

AUTHORIZED SIGNATURE | TITLE: Broker | DATE: 6-11-05

11. U.S. DEPARTMENT OF TRANSPORTATION DESCRIPTION (including proper shipping name, hazard class, UN ID number, and any additional information)	12. DOT LABEL "RADIOACTIVE"	13. TRANSPORT INDEX	14. PHYSICAL AND CHEMICAL FORM	15. INDIVIDUAL RADIONUCLIDES	16. TOTAL PACKAGE ACTIVITY MBq	mCi	17. LSA/SCO CLASS	18. TOTAL WEIGHT OR VOLUME (Use appropriate units)	19. IDENTIFICATION NUMBER OF PACKAGE
Soil,DOT Non-Regulated, containing Radionuclides	NA	NA	Solid / OXIDES	Ac-227 Pa-231 Ra-223 Ra-226 Ra-228 Th-227 Th-228 Th-230 Th-232 U-234 U-Nat	1.8600E+00	5.0271E-02	NA	13720 LBS; 106.25 FT3	9130
Soil,DOT Non-Regulated, containing Radionuclides	NA	NA	Solid / OXIDES	Ac-227 Pa-231 Ra-223 Ra-226 Ra-228 Th-227 Th-228 Th-230 Th-232 U-234 U-Nat	4.1042E+00	1.1092E-01	NA	21970 LBS; 173.73 FT3	9144
Soil,DOT Non-Regulated, containing Radionuclides	NA	NA	Solid / OXIDES	Ac-227 Pa-231 Ra-223 Ra-226 Ra-228 Th-227 Th-228 Th-230 Th-232 U-234 U-Nat	2.5721E+00	6.9517E-02	NA	21380 LBS; 169.05 FT3	9145

FOR CONSIGNEE USE ONLY

___ Record Waste Description Inadequate
___ Contamination or Leakage Detected
___ Unexpected Exposure Rates Detected
___ Labels, Markings, etc. Inadequate
___ Container Integrity Inadequate
___ Other
✓ No Violations Detected on this Shipment

20. TERMS AND CONDITIONS

A. HAZARDOUS MATERIALS: Generator represents & warrants that Waste Material __ is (or) ✓ is not a hazardous waste as defined in 40 CFR 261. Where the material is a hazardous waste, this shipment is also accompanied by a separate and completed hazardous waste manifest, along with the appropriate land-disposal restriction notice and/or certification as required by 40 CFR 268.1.

B. TITLE: Upon acceptance at the disposal site by Envirocare of Utah, Inc., and all appropriate regulatory authorities, title to the Waste Material which conforms to Generator's representations herein shall thereupon transfer from Generator and be vested in Envirocare of Utah, Inc.

C. WASTE MATERIAL: Generator represents and warrants that all data set forth in this (UNIFORM LOW-LEVEL RADIOACTIVE WASTE MANIFEST) are true and correct in all respects and in accordance with all applicable governmental laws, rules, regulations and Envirocare of Utah Inc.'s facility license.

D. INDEMNIFICATION: Generator agrees to indemnify Envirocare of Utah, Inc., its officers, employees and agents against all losses and liability whatsoever if such losses or liability results from the failure of the Waste Material to conform in all material respects to the data supplied on the (UNIFORM LOW-LEVEL RADIOACTIVE WASTE MANIFEST.) or if this shipment fails to meet the standards prescribed by the Department of Transportation or any governmental agency having jurisdiction over such matters.

FORM 540 (04-03)

FORM 540A

Envirocare of Utah, Inc.

UNIFORM LOW-LEVEL RADIOACTIVE WASTE MANIFEST

SHIPPING PAPER (CONTINUATION)

8. MANIFEST NUMBER
(Use this number on all continuation pages)
0840-01-976

11. U.S. DEPARTMENT OF TRANSPORTATION DESCRIPTION (Including proper shipping name, hazard class, UN ID number, and any additional information)	12. DOT LABEL "RADIOACTIVE"	13. TRANSPORT INDEX	14. PHYSICAL AND CHEMICAL FORM	15. INDIVIDUAL RADIONUCLIDES	16. TOTAL PACKAGE ACTIVITY MBq	mCi	17. LSA/SCO CLASS	18. TOTAL WEIGHT OR VOLUME (Use appropriate units)	19. IDENTIFICATION NUMBER OF PACKAGE
Soil,DOT Non-Regulated, containing Radionuclides	NA	NA	Solid / OXIDES	Ac-227 Pa-231 Ra-223 Ra-226 Ra-228 Th-227 Th-228 Th-230	9.0410E-01	2.4435E-02	NA	19460 LBS; 153.81 FT3	9151
				Th-232 U-234 U-Nat					
Soil,DOT Non-Regulated, containing Radionuclides	NA	NA	Solid / OXIDES	Ac-227 Pa-231 Ra-223 Ra-226 Ra-228 Th-227 Th-228 Th-230	1.2566E+00	3.3961E-02	NA	17920 LBS; 141.59 FT3	9165
				Th-232 U-234 U-Nat					
Soil,DOT Non-Regulated, containing Radionuclides	NA	NA	Solid / OXIDES	Ac-227 Pa-231 Ra-223 Ra-226 Ra-228 Th-227 Th-228 Th-230	2.5386E+00	6.8611E-02	NA	9680 LBS; 76.19 FT3	9210
				Th-232 U-234 U-Nat					
Soil,DOT Non-Regulated, containing Radionuclides	NA	NA	Solid / OXIDES	Ac-227 Pa-231 Ra-223 Ra-226 Ra-228 Th-227 Th-228 Th-230	1.6136E+00	4.3610E-02	NA	16440 LBS; 129.84 FT3	9217
				Th-232 U-234 U-Nat					

FORM 540A (04-03)

ENVIROCARE *OF UTAH, LLC.*

THE SAFE ALTERNATIVE

CERTIFICATE OF DISPOSAL

GTE Operations Support Inc., Irving

This Certificate acknowledges that the following manifested shipments:

Shipment	Disposal Location	Date	Shipment	Disposal Location	Date
0840-01-0976	Class A	06/13/05 17:42:07			

Representing 952.46 cubic feet of waste has been disposed of at the above listed Disposal Facility. Disposal is subject to Envirocare's Radioactive Material License, all other applicable licenses, permits and regulations, and the Disposal Agreement.

Brent Anderson
Director of LLRW Operations

6/15/05
Date

605 N. 5600 W, Salt Lake City, Utah 84116 Telephone (801) 532-1330

CEFX	Shipment #	0											
on-site	new	Bag #	9210	9165	9144	9151	9217	9145	9130				
	Storage Loc.		9680	17920	21970	19460	16440	21380	13720				
31022	[redacted]	197800	[redacted]										

[redacted]

Attachment 5.10
TRANSPORT VEHICLE RELEASE CHECKLIST

Shipment Number- 0840.01-9916

Truck Number- 38 – R406

Trailer Number- 225 – 226

A qualified MHF-LS shipping technician shall verify that each item listed is satisfactory and then place a Check Mark in the corresponding box.

1. Driver possesses a valid driver's license with a HAZMAT endorsement ☑
2. Driver possesses a valid copy of a "Research and Special Programs Administration" U.S. DOT Hazmat Registration Certificate ☑
3. If manifested on a Hazardous Waste Manifest, ensure the carrier possesses a current EPA ID # ☐
4. Lamps are operable ☑
   - Headlights and Brights
   - Warning Lights and Flashers
   - Brake Lights
5. Coupling devices are intact ☑
6. Tires are sufficient ☑
   - No fabric is exposed through tread or sidewall
   - Front wheel tires must have tread pattern to a depth of ≥1/8 inch
   - Other tires must have tread pattern to a depth of ≥1/16 inch
   - Re-treaded tires are not authorized
7. Horn is operable ☑
8. Windshield wipers are operable ☑
9. Rear-vision mirrors are adequate (1 on each side) ☑
10. Emergency equipment is on-hand and accessible ☑
    - Fire extinguisher
    - Warning devices- bi-directional emergency reflectors, triangles (3), or liquid burning flares
11. General vehicle integrity is satisfactory ☑
    - Frame appears undamaged
    - Flooring is sufficient to support load
    - If a closed transport vehicle, vehicle is closed
    - Vehicle is otherwise in unimpaired physical condition
12. Vehicle truck and trailer have current DOT inspection stickers on both components (Good for 1 year from date performed) ☑
13. Vehicle is properly placarded (Exclusive Use LSA, Yellow III and HRCQ only) ☑
14. Shoring, strapping, blocking and bracing is adequate to prevent shifting of lading ☑

MHF-LS Qualified Technician Signature _____
Shipment Date 5.11.05

Attachment 5.9
LOADING DIAGRAM

A qualified MHF-LS shipper shall complete the following diagram by writing the package number and corresponding weight at the approximate position in which it is placed. The space to the left of the diagram may be used for additional or explanatory information as necessary.

Shipment Number- 0840-01-976

Front

9210
9,680-lbs

9165
17,920-lbs

Rear

MHF-LS Qualified Technician
Signature_____
Shipment Date_____

Attachment 5.9
LOADING DIAGRAM

A qualified MHF-LS shipper shall complete the following diagram by writing the package number and corresponding weight at the approximate position in which it is placed. The space to the left of the diagram may be used for additional or explanatory information as necessary.

Shipment Number- 0840-01-976

Front

9144
21,970-lbs

9151
19460-lbs

Rear

MHF-LS Qualified Technician
Signature_____
Shipment Date_____

Attachment 5.9
LOADING DIAGRAM

A qualified MHF-LS shipper shall complete the following diagram by writing the package number and corresponding weight at the approximate position in which it is placed. The space to the left of the diagram may be used for additional or explanatory information as necessary.

Shipment Number- 0840.01-976

Front

9217
16,440-lbs

9145
21,380-lbs

Rear

MHF-LS Qualified Technician
Signature_____
Shipment Date_____

Attachment 5.9
LOADING DIAGRAM

A qualified MHF-LS shipper shall complete the following diagram by writing the package number and corresponding weight at the approximate position in which it is placed. The space to the left of the diagram may be used for additional or explanatory information as necessary.

Shipment Number- 0840-01-976

Front

9130
13720-lbs

Rear

MHF-LS Qualified Technician
Signature_____
Shipment Date_____

Attachment 5.15
RAILCAR INSPECTION FORM

Shipment Number	Carrier	Railcar Number
0840-01-976	New York + Atlantic / LIRR	CEFX-31022

Item	SAT	UNSAT	Criteria	Comments
Coupler	☑	☐	Hardware intact, no cracks or broken welds, latching mechanism works properly, no loose or damaged parts	
Suspension	☑	☐	Hardware intact, no visible cracks or broken welds, coil springs seated and intact, inner and outer bearings intact and seated properly	
Wheel & Axle Assembly	☑	☐	Overall condition, no cracks or damaged areas on wheel surfaces, hubs centered, bolting intact, rims not bent or cracked	
Frame & Undercarriage	☑	☐	Main beams straight and centered, no major bends or damage, welds intact, no cracks	
Floors & Walls (Gondola, Boxcar)	☑	☐	No damage with open holes, punch throughs, ect. No rust damage, seams and welds intact, no rotting or other material problems, structurally sound	
Attachment Points or Tie Downs	☑	☐	Tie down hardware straight and intact, no cracks on or around attachment hardware, mechanical clips or latches operable and complete	
Doors (Boxcar Only)	☑	☐	Can be closed and secured properly, lubricated properly, rollers and tracks in operable condition, no loose or missing hardware, sealing surfaces intact and seals in serviceable condition	
Seals and Gasket	☑	☐	Seal Flanges intact with no dents or bends that affect sealing capability, gaskets pliable and in serviceable condition, no torn or missing areas, gasket appropriate to meet sealing requirements	
Seams (Gondola, Boxcar)	☑	☐	Seams intact, welds visibly sufficient, all corners and mating interfaces caulked and sealed properly	
Drains	☑	☐	Drains plugged or sealed properly, verify threaded plugs are tack welded or otherwise disabled, all other holes closed and sealed	
Brakes	☑	☐	Visibly inspect brake shoes, minimum 1" contact surface on all shoes, hoses and piping (tubing) mechanically sound, no missing or loose hardware, valves operate freely, no kinks or obstructions in piping or hoses	
Paint and Lettering	☑	☐	Overall good condition of exterior surfaces, identification numbering legible and intact, areas for placards or labels intact and structurally sound (Wood or metal panels)	
Bracing	☑	☐	Bracing and shoring must be sufficient to prevent shifting of lading during conditions normally incident to transportation	

MHF-LS Qualified Technician Signature _____

Shipment Date 5.11.05

Straight Bill of Lading

Shipper MHF-LS For GTE Operations Support Incorporated
140 Contiague Rock Road
Hicksville, NY 11369

Date: 5/11/2005

Consigned to MHF-LS @ New York-Atlantic Rail Spur
Hicksville, NY 11369

Load in Gondola # CEFX 31022

Emergency Contact: CHEMTREC 800-424-9300

TR: TL:

Quantity	Description		Net Waste Weight
2	Soil, DOT Non-Regulated Waste, Containing		
	Radioactive Materials.		
	Package ID Number		**Pounds:**
	Liner	9130	13720
	Liner		
			Total:
			13720
	Packages do not meet the DOT "radioactive material"		
	definition in 49 CFR 173.403.		
	B 5/12/05		
	Radionuclide: Ac-227,Th-227,~~U238,~~ Th232, Th230,Pa-231,Ra-223		
	Ra-226,Ra-228,Th-228,U-234,U-nat,		
	Total Activity: 1.86 MBq		
	Physical Form: Solid		
	Chemical Form: Metal Oxide		

GENERATOR CERTIFICATION: I hereby certify and declare that the contents of this consignment are fully and accurately described above by proper shipping name and are classified, packed, marked, and labeled, and are in all respects in proper condition for transport by highway according to applicable international and national government regulations.

Printed/Typed Name	Signature		Date
Rob Miller for MHFLS at GTEOSI			5/11/2005
Transporter	Signature		Date
Priority Transport			5/11/2005

Straight Bill of Lading

Shipper MHF-LS For GTE Operations Support Incorporated
140 Contiague Rock Road
Hicksville, NY 11369

Date: 5/11/2005

Consigned to MHF-LS @ New York-Atlantic Rail Spur
Hicksville, NY 11369

Load in Gondola # CEFX 31022

Emergency Contact: CHEMTREC 800-424-9300

TR: TL:

Total All Trucks 120570

Quantity	Description		Net Waste Weight
2	Soil, DOT Non-Regulated Waste, Containing		
	Radioactive Materials.		
	Package ID Number		**Pounds:**
	Liner	9210	9680
	Liner	9165	17920
			Total:
			27600
	Packages do not meet the DOT "radioactive material"		
	definition in 49 CFR 173.403.		
	JBS 5/12/05		
	Radionuclide: Ac-227,Th-227,~~U238,~~ Th232, Th230,Pa-231,Ra-223		
	Ra-226,Ra-228,Th-228,U-234,U-nat,		
	Total Activity: 3.7952 MBq		
	Physical Form: Solid		
	Chemical Form: Metal Oxide		

GENERATOR CERTIFICATION. I hereby certify and declare that the contents of this consignment are fully and accurately described above by proper shipping name and are classified, packed, marked, and labeled, and are in all respects in proper condition for transport by highway according to applicable international and national government regulations

Printed/Typed Name	Signature		Date
Rob Miller for MHFLS at GTEOSI			5/11/2005
Transporter	Signature		Date
Priority Transport			5/11/2005

Straight Bill of Lading

Shipper MHF-LS For GTE Operations Support Incorporated
140 Contiague Rock Road
Hicksville, NY 11369

Date: 5/11/2005

Consigned to MHF-LS @ New York-Atlantic Rail Spur
Hicksville, NY 11369

Load in Gondola # CEFX 31022

Emergency Contact: CHEMTREC 800-424-9300

TR: TL:

Quantity	Description		Net Waste Weight
2	Soil, DOT Non-Regulated Waste, Containing		
	Radioactive Materials.		
	Package ID Number		**Pounds:**
	Liner	9144	21970
	Liner	9151	19460
			Total:
			41430
	Packages do not meet the DOT "radioactive material"		
	definition in 49 CFR 173.403.		
	5/13/05		
	Radionuclide: Ac-227,Th-227,~~U238,~~ Th232, Th230,Pa-231,Ra-223		
	Ra-226,Ra-228,Th-228,U-234,U-nat,		
	Total Activity: 5.0083 MBq		
	Physical Form: Solid		
	Chemical Form: Metal Oxide		

GENERATOR CERTIFICATION: I hereby certify and declare that the contents of this consignment are fully and accurately described above by proper shipping name and are classified, packed, marked, and labeled, and are in all respects in proper condition for transport by highway according to applicable international and national government regulations.

Printed/Typed Name	Signature		Date
Rob Miller for MHFLS at GTEOSI			5/11/2005
Transporter	Signature		Date
Priority Transport			5/11/2005

Straight Bill of Lading

Shipper MHF-LS For GTE Operations Support Incorporated
140 Contiague Rock Road
Hicksville, NY 11369

Date: 5/11/2005

Consigned to MHF-LS @ New York-Atlantic Rail Spur
Hicksville, NY 11369

Load in Gondola # CEFX 31022

Emergency Contact: CHEMTREC 800-424-9300

TR: TL;

Quantity	Description		Net Waste Weight
2	Soil, DOT Non-Regulated Waste, Containing		
	Radioactive Materials.		
	Package ID Number		**Pounds:**
	Liner	9217	16440
	Liner	9145	21380
			Total:
			37820
	Packages do not meet the DOT "radioactive material"		
	definition in 49 CFR 173.403.		
	Radionuclide: Ac-227,Th-227,~~U238,~~ Th232, Th230,Pa-231,Ra-223		
	Ra-226,Ra-228,Th-228,U-234,U-nat,		
	Total Activity: 4.1857 MBq		
	Physical Form: Solid		
	Chemical Form: Metal Oxide		

GENERATOR CERTIFICATION: I hereby certify and declare that the contents of this consignment are fully and accurately described above by proper shipping name and are classified, packed, marked, and labeled, and are in all respects in proper condition for transport by highway according to applicable international and national government regulations.

Printed/Typed Name	Signature		Date
Rob Miller for MHFLS at GTEOSI			5/11/2005
Transporter	Signature		Date
Priority Transport			5/11/2005

container #
9130

shipping check sheet (For Form 540)

	Ac-227		corrected	activity mBq	activity mCi	activity Ci	SNM	source	
		5.284E-002	5.284E-002	1.2107E-02	3.2721E-04	3.2721E-07	grams	kg	
grams			pCi/g				4.5447E-09	4.5447E-12	
6192560		7.2000E+01							
	Pa-231			activity mBq	activity mCi	activity Ci	SNM	source	
13640		2.475E-001	2.475E-001	5.6708E-02	1.5327E-03	1.5327E-06	grams	kg	
grams							3.2610E-05	3.2610E-08	
6192560		4.7000E-02							
	Ra-223			activity mBq	activity mCi	activity Ci	SNM	source	
13640		1.032E-001	1.032E-001	2.3648E-02	6.3907E-04	6.3907E-07	grams	kg	
grams							1.2531E-11	1.2531E-14	
6192560		5.1000E+04							
	Ra-226			activity mBq	activity mCi	activity Ci	SNM	source	
13640		3.253E-001	2.3617E-01	5.4112E-02	1.4625E-03	1.4625E-06	grams	kg	1.37741
grams							1.4625E-06	1.4625E-09	
6192560		1.0000E+00							
	Ra228			activity mBq	activity mCi	activity Ci	SNM	source	
13640		5.523E-001	7.8340E-01	1.7950E-01	4.8513E-03	4.8513E-06	grams	kg	0.705
grams							1.7968E-08	1.7968E-11	
6192560		2.7000E+02							
	TH-227			activity mBq	activity mCi	activity Ci	SNM	source	
13640		5.284E-002	5.284E-002	1.2107E-02	3.2721E-04	3.2721E-07	grams	kg	
grams							1.0555E-11	1.0555E-14	
6192560		3.1000E+04							
	Th-228			activity mBq	activity mCi	activity Ci	SNM	source	
13640		5.006E-001	9.0408E-01	2.0715E-01	5.5986E-03	5.5986E-06	grams	kg	
grams							6.8275E-09	6.8275E-12	0.55371
6192560		8.2000E+02							
	Th-230			activity mBq	activity mCi	activity Ci	SNM	source	
13640		5.523E-001	4.0981E-01	9.3897E-02	2.5377E-03	2.5377E-06	grams	kg	
grams							1.2085E-04	1.2085E-07	1.34771
6192560		2.1000E-02							
	TH-232			activity mBq	activity mCi	activity Ci	SNM	source	
13640		5.523E-001	7.8340E-01	1.7950E-01	4.8513E-03	4.8513E-06	grams	kg	0.705
grams							4.4103E+01	4.4103E-02	
6192560		1.1000E-07							
	U-234			activity mBq	activity mCi	activity Ci	SNM	source	
13640		2.007E+000	1.7822E+00	4.0835E-01	1.1036E-02	1.1036E-05	grams	kg	1.12613
grams							1.7801E-03	1.7801E-06	
6192560		6.2000E-03							
	U-235			activity mBq	activity mCi	activity Ci	SNM	source	
13640		4.217E-002	5.3995E-02	1.2372E-02	3.3437E-04	3.3437E-07	grams	kg	0.781
grams							1.5198E-01	1.5198E-04	
6192560		2.2000E-06							
	U-238			activity mBq	activity mCi	activity Ci	SNM	source	
13640		2.007E+000	2.7085E+00	6.2058E-01	1.6773E-02	1.6773E-05	grams	kg	0.741
grams							4.9331E+01	4.9331E-02	
6192560		3.4000E-07							

Totals for all flag 1 data

			corrected	activity mBq	activity mCi	activity Ci	SNM	source	
13640		6.9954E+00	8.0651E+00	1.8600E+00	5.0271E-02	5.0271E-05	grams	kg	flag1 data
			pCi/g	541 will be < than the 540 (MDA not added)			1.5198E-01	9.3436E-02	
108.2539683				data for NORM					
	U-nat		corrected pCi/g	activity mBq	activity mCi	activity Ci		source	
		2.0492E+00	2.7625E+00	6.3296E-01	1.7107E-02	1.7107E-05		kg	
								2.4094E-02	
		7.1000E-07							

	U-nat		corrected pCi/g	activity mBq	activity mCi	activity Ci		source	
		6.9954E+00	8.0651E+00	1.8600E+00	5.0271E-02	5.0271E-05		kg total	norm data
								6.8199E-02	

X

container #
9145

shipping check sheet (For Form 540)

	Ac-227		corrected	activity mBq	activity mCi	activity Ci	SNM	source	
		6.894E-002	6.894E-002	2.4687E-02	6.6666E-04	6.6666E-07	grams	kg	
grams			pCi/g				9.2592E-09	9.2592E-12	
9670200		7.2000E+01							
	Pa-231			activity mBq	activity mCi	activity Ci	SNM	source	
21300		1.778E-001	1.778E-001	6.3616E-02	1.7194E-03	1.7194E-06	grams	kg	
grams							3.6582E-05	3.6582E-08	
9670200		4.7000E-02							
	Ra-223			activity mBq	activity mCi	activity Ci	SNM	source	
21300		3.924E-002	3.924E-002	1.4040E-02	3.7946E-04	3.7946E-07	grams	kg	
grams							7.4404E-12	7.4404E-15	
9670200		5.1000E+04							
	Ra-226			activity mBq	activity mCi	activity Ci	SNM	source	
21300		2.923E-001	2.1221E-01	7.5928E-02	2.0521E-03	2.0521E-06	grams	kg	1.37741
grams							2.0521E-06	2.0521E-09	
9670200		1.0000E+00							
	Ra-228			activity mBq	activity mCi	activity Ci	SNM	source	
21300		3.559E-001	5.0482E-01	1.8062E-01	4.8817E-03	4.8817E-06	grams	kg	0.705
grams							1.8081E-08	1.8081E-11	
9670200		2.7000E+02							
	Th-227			activity mBq	activity mCi	activity Ci	SNM	source	
21300		6.894E-002	6.894E-002	2.4687E-02	6.6666E-04	6.6666E-07	grams	kg	
grams							2.1505E-11	2.1505E-14	
9670200		3.1000E+04							
	Th-228			activity mBq	activity mCi	activity Ci	SNM	source	
21300		3.678E-001	6.6425E-01	2.3767E-01	6.4234E-03	6.4234E-06	grams	kg	
grams							7.8334E-09	7.8334E-12	0.55371
9670200		8.2000E+02							
	Th-230			activity mBq	activity mCi	activity Ci	SNM	source	
21300		3.559E-001	2.6408E-01	9.4486E-02	2.5537E-03	2.5537E-06	grams	kg	
grams							1.2160E-04	1.2160E-07	1.34771
9670200		2.1000E-02							
	Th-232			activity mBq	activity mCi	activity Ci	SNM	source	
21300		3.559E-001	5.0482E-01	1.8062E-01	4.8817E-03	4.8817E-06	grams	kg	0.705
grams							4.4379E+01	4.4379E-02	
9670200		1.1000E-07							
	U-234			activity mBq	activity mCi	activity Ci	SNM	source	
21300		1.971E+000	1.7502E+00	6.2623E-01	1.6925E-02	1.6925E-05	grams	kg	1.12613
grams							2.7299E-03	2.7299E-06	
9670200		6.2000E-03							
	U-235			activity mBq	activity mCi	activity Ci	SNM	source	
21300		2.136E-001	2.7350E-01	9.7856E-02	2.6446E-03	2.6446E-06	grams	kg	0.781
grams							1.2022E+00	1.2022E-03	
9670200		2.2000E-06							
	U-238			activity mBq	activity mCi	activity Ci	SNM	source	
21300		1.971E+000	2.6599E+00	9.5171E-01	2.5722E-02	2.5722E-05	grams	kg	0.741
grams							7.5653E+01	7.5653E-02	
9670200		3.4000E-07							

Totals for all flag 1 data

			corrected	activity mBq	activity mCi	activity Ci	SNM	source	
21300		6.2383E+00	7.1198E+00	2.5721E+00	6.9517E-02	6.9517E-05	grams	kg	flag1 data
			pCi/g	541 will be < than the 540 (MDA not added)			1.2022E+00	1.2004E-01	
169.047619				data for NORM					
	U-nat		corrected pCi/g	activity mBq	activity mCi	activity Ci		source	
		2.1846E+00	2.9334E+00	1.0496E+00	2.8367E-02	2.8367E-05		kg	
								3.9953E-02	
		7.1000E-07							

	U-nat		corrected pCi/g	activity mBq	activity mCi	activity Ci		source	
		6.2383E+00	7.1198E+00	2.5721E+00	6.9517E-02	6.9517E-05		kg total	norm data
								8.4335E-02	

X

container #
9217

shipping check sheet (For Form 540)

	Ac-227		corrected	activity mBq	activity mCi	activity Ci	SNM	source	
		4.633E-002	4.633E-002	1.2732E-02	3.4411E-04	3.4411E-07	grams	kg	
grams			pCi/g				4.7794E-09	4.7794E-12	
7427440		7.2000E+01							
	Pa-231			activity mBq	activity mCi	activity Ci	SNM	source	
16360		2.357E-001	2.357E-001	6.4774E-02	1.7506E-03	1.7506E-06	grams	kg	
grams							3.7248E-05	3.7248E-08	
7427440		4.7000E-02							
	Ra-223			activity mBq	activity mCi	activity Ci	SNM	source	
16360		8.738E-002	8.738E-002	2.4013E-02	6.4901E-04	6.4901E-07	grams	kg	
grams							1.2726E-11	1.2726E-14	
7427440		5.1000E+04							
	Ra-226			activity mBq	activity mCi	activity Ci	SNM	source	
16360		2.275E-001	1.6517E-01	4.5390E-02	1.2268E-03	1.2268E-06	grams	kg	1.37741
grams							1.2268E-06	1.2268E-09	
7427440		1.0000E+00							
	Ra228			activity mBq	activity mCi	activity Ci	SNM	source	
16360		3.374E-001	4.7858E-01	1.3152E-01	3.5546E-03	3.5546E-06	grams	kg	0.705
grams							1.3165E-08	1.3165E-11	
7427440		2.7000E+02							
	TH-227			activity mBq	activity mCi	activity Ci	SNM	source	
16360		4.633E-002	4.633E-002	1.2732E-02	3.4411E-04	3.4411E-07	grams	kg	
grams							1.1100E-11	1.1100E-14	
7427440		3.1000E+04							
	Th-228			activity mBq	activity mCi	activity Ci	SNM	source	
16360		3.167E-001	5.7196E-01	1.5718E-01	4.2482E-03	4.2482E-06	grams	kg	
grams							5.1807E-09	5.1807E-12	0.55371
7427440		8.2000E+02							
	Th-230			activity mBq	activity mCi	activity Ci	SNM	source	
16360		3.374E-001	2.5035E-01	6.8800E-02	1.8595E-03	1.8595E-06	grams	kg	
grams							8.8546E-05	8.8546E-08	1.34771
7427440		2.1000E-02							
	TH-232			activity mBq	activity mCi	activity Ci	SNM	source	
16360		3.374E-001	4.7858E-01	1.3152E-01	3.5546E-03	3.5546E-06	grams	kg	0.705
grams							3.2315E+01	3.2315E-02	
7427440		1.1000E-07							
	U-234			activity mBq	activity mCi	activity Ci	SNM	source	
16360		1.400E+000	1.2432E+00	3.4165E-01	9.2338E-03	9.2338E-06	grams	kg	1.12613
grams							1.4893E-03	1.4893E-06	
7427440		6.2000E-03							
	U-235			activity mBq	activity mCi	activity Ci	SNM	source	
16360		2.957E-001	3.7862E-01	1.0405E-01	2.8122E-03	2.8122E-06	grams	kg	0.781
grams							1.2783E+00	1.2783E-03	
7427440		2.2000E-06							
	U-238			activity mBq	activity mCi	activity Ci	SNM	source	
16360		1.400E+000	1.8893E+00	5.1922E-01	1.4033E-02	1.4033E-05	grams	kg	0.741
grams							4.1273E+01	4.1273E-02	
7427440		3.4000E-07							

Totals for all flag 1 data

			corrected	activity mBq	activity mCi	activity Ci	SNM	source	
16360		5.0678E+00	5.8252E+00	1.6136E+00	4.3610E-02	4.3610E-05	grams	kg	flag1 data
			pCi/g	541 will be < than the 540 (MDA not added)			1.2783E+00	7.3590E-02	
129.8412698				data for NORM					
	U-nat		corrected pCi/g	activity mBq	activity mCi	activity Ci		source	
		1.6957E+00	2.2680E+00	6.2327E-01	1.6845E-02	1.6845E-05		kg	
								2.3726E-02	
		7.1000E-07							

	U-nat		corrected pCi/g	activity mBq	activity mCi	activity Ci		source	
		5.0678E+00	5.8252E+00	1.6136E+00	4.3610E-02	4.3610E-05		kg total	norm data
								5.6042E-02	

X

container #
9151

shipping check sheet (For Form 540)

	Ac-227		corrected	activity mBq	activity mCi	activity Ci	SNM	source	
		9.279E-002	9.279E-002	3.0207E-02	8.1641E-04	8.1641E-07	grams	kg	
grams			pCi/g				1.1339E-08	1.1339E-11	
8798520		7.2000E+01							
	Pa-231			activity mBq	activity mCi	activity Ci	SNM	source	
19380		3.355E-001	3.355E-001	1.0922E-01	2.9519E-03	2.9519E-06	grams	kg	
grams							6.2806E-05	6.2806E-08	
8798520		4.7000E-02							
	Ra-223			activity mBq	activity mCi	activity Ci	SNM	source	
19380		3.723E-002	3.723E-002	1.2120E-02	3.2757E-04	3.2757E-07	grams	kg	
grams							6.4229E-12	6.4229E-15	
8798520		5.1000E+04							
	Ra-226			activity mBq	activity mCi	activity Ci	SNM	source	
19380		1.423E-001	1.0331E-01	3.3632E-02	9.0897E-04	9.0897E-07	grams	kg	1.37741
grams							9.0897E-07	9.0897E-10	
8798520		1.0000E+00							
	Ra228			activity mBq	activity mCi	activity Ci	SNM	source	
19380		2.396E-001	3.3986E-01	1.1064E-01	2.9902E-03	2.9902E-06	grams	kg	0.705
grams							1.1075E-08	1.1075E-11	
8798520		2.7000E+02							
	TH-227			activity mBq	activity mCi	activity Ci	SNM	source	
19380		9.279E-002	9.279E-002	3.0207E-02	8.1641E-04	8.1641E-07	grams	kg	
grams							2.6336E-11	2.6336E-14	
8798520		3.1000E+04							
	Th-228			activity mBq	activity mCi	activity Ci	SNM	source	
19380		2.197E-001	3.9678E-01	1.2917E-01	3.4911E-03	3.4911E-06	grams	kg	
grams							4.2574E-09	4.2574E-12	0.55371
8798520		8.2000E+02							
	Th-230			activity mBq	activity mCi	activity Ci	SNM	source	
19380		2.396E-001	1.7778E-01	5.7876E-02	1.5642E-03	1.5642E-06	grams	kg	
grams							7.4487E-05	7.4487E-08	1.34771
8798520		2.1000E-02							
	TH-232			activity mBq	activity mCi	activity Ci	SNM	source	
19380		2.396E-001	3.3986E-01	1.1064E-01	2.9902E-03	2.9902E-06	grams	kg	0.705
grams							2.7184E+01	2.7184E-02	
8798520		1.1000E-07							
	U-234			activity mBq	activity mCi	activity Ci	SNM	source	
19380		3.318E-001	2.9464E-01	9.5918E-02	2.5924E-03	2.5924E-06	grams	kg	1.12613
grams							4.1812E-04	4.1812E-07	
8798520		6.2000E-03							
	U-235			activity mBq	activity mCi	activity Ci	SNM	source	
19380		9.284E-002	1.1887E-01	3.8699E-02	1.0459E-03	1.0459E-06	grams	kg	0.781
grams							4.7541E-01	4.7541E-04	
8798520		2.2000E-06							
	U-238			activity mBq	activity mCi	activity Ci	SNM	source	
19380		3.318E-001	4.4777E-01	1.4577E-01	3.9397E-03	3.9397E-06	grams	kg	0.741
grams							1.1587E+01	1.1587E-02	
8798520		3.4000E-07							

Totals for all flag 1 data

			corrected	activity mBq	activity mCi	activity Ci	SNM	source	
19380		2.3956E+00	2.6844E+00	9.0410E-01	2.4435E-02	2.4435E-05	grams	kg	flag1 data
			pCi/g	541 will be < than the 540 (MDA not added)			4.7541E-01	3.8772E-02	
153.8095238				data for NORM					
	U-nat		corrected pCi/g	activity mBq	activity mCi	activity Ci		source	
		4.2464E-01	5.6665E-01	1.8447E-01	4.9857E-03	4.9857E-06		kg	
								7.0220E-03	
		7.1000E-07							

	U-nat		corrected pCi/g	activity mBq	activity mCi	activity Ci		source	
		2.3956E+00	2.6844E+00	9.0410E-01	2.4435E-02	2.4435E-05		kg total	norm data
								3.4207E-02	

X

container #
9144

shipping check sheet (For Form 540)

	Ac-227		corrected	activity mBq	activity mCi	activity Ci	SNM	source	
		7.052E-002	7.052E-002	2.5931E-02	7.0083E-04	7.0083E-07	grams	kg	
grams			pCi/g				9.7338E-09	9.7338E-12	
9938060		7.2000E+01							
	Pa-231			activity mBq	activity mCi	activity Ci	SNM	source	
21890		2.281E-001	2.281E-001	8.3874E-02	2.2689E-03	2.2689E-06	grams	kg	
grams							4.8231E-05	4.8231E-08	
9938060		4.7000E-02							
	Ra-223			activity mBq	activity mCi	activity Ci	SNM	source	
21890		5.573E-002	5.573E-002	2.0492E-02	5.5385E-04	5.5385E-07	grams	kg	
grams							1.0860E-11	1.0860E-14	
9938060		5.1000E+04							
	Ra-226			activity mBq	activity mCi	activity Ci	SNM	source	
21890		3.116E-001	2.2622E-01	8.3184E-02	2.2482E-03	2.2482E-06	grams	kg	1.37741
grams							2.2482E-06	2.2482E-09	
9938060		1.0000E+00							
	Ra228			activity mBq	activity mCi	activity Ci	SNM	source	
21890		4.669E-001	6.6227E-01	2.4352E-01	6.5817E-03	6.5817E-06	grams	kg	0.705
grams							2.4377E-08	2.4377E-11	
9938060		2.7000E+02							
	TH-227			activity mBq	activity mCi	activity Ci	SNM	source	
21890		7.052E-002	7.052E-002	2.5931E-02	7.0083E-04	7.0083E-07	grams	kg	
grams							2.2607E-11	2.2607E-14	
9938060		3.1000E+04							
	Th-228			activity mBq	activity mCi	activity Ci	SNM	source	
21890		4.143E-001	7.4623E-01	2.7513E-01	7.4359E-03	7.4359E-06	grams	kg	
grams							9.0682E-09	9.0682E-12	0.55371
9938060		8.2000E+02							
	Th-230			activity mBq	activity mCi	activity Ci	SNM	source	
21890		4.669E-001	3.4644E-01	1.2739E-01	3.4429E-03	3.4429E-06	grams	kg	
grams							1.6395E-04	1.6395E-07	1.34771
9938060		2.1000E-02							
	TH-232			activity mBq	activity mCi	activity Ci	SNM	source	
21890		4.669E-001	6.6227E-01	2.4352E-01	6.5817E-03	6.5817E-06	grams	kg	0.705
grams							5.9833E+01	5.9833E-02	
9938060		1.1000E-07							
	U-234			activity mBq	activity mCi	activity Ci	SNM	source	
21890		3.408E+000	3.0263E+00	1.1128E+00	3.0075E-02	3.0075E-05	grams	kg	1.12613
grams							4.8509E-03	4.8509E-06	
9938060		6.2000E-03							
	U-235			activity mBq	activity mCi	activity Ci	SNM	source	
21890		3.637E-001	4.6589E-01	1.7124E-01	4.6280E-03	4.6280E-06	grams	kg	0.781
grams							2.1036E+00	2.1036E-03	
9938060		2.2000E-06							
	U-238			activity mBq	activity mCi	activity Ci	SNM	source	
21890		3.408E+000	4.5992E+00	1.6912E+00	4.5707E-02	4.5707E-05	grams	kg	0.741
grams							1.3443E+02	1.3443E-01	
9938060		3.4000E-07							

Totals for all flag 1 data

			corrected	activity mBq	activity mCi	activity Ci	SNM	source	
21890		9.7312E+00	1.1091E+01	4.1042E+00	1.1092E-01	1.1092E-04	grams	kg	flag1 data
			pCi/g	541 will be < than the 540 (MDA not added)			2.1036E+00	1.9427E-01	
173.7301587				data for NORM					
	U-nat		corrected pCi/g	activity mBq	activity mCi	activity Ci		source	
		3.7717E+00	5.0649E+00	1.8624E+00	5.0335E-02	5.0335E-05		kg	
								7.0894E-02	
		7.1000E-07							

	U-nat		corrected pCi/g	activity mBq	activity mCi	activity Ci		source	
		9.7312E+00	1.1091E+01	4.1042E+00	1.1092E-01	1.1092E-04		kg total	norm data
								1.3073E-01	

X

container #
9210

shipping check sheet (For Form 540)

	Ac-227		corrected	activity mBq	activity mCi	activity Ci	SNM	source	
		1.334E-001	1.334E-001	2.1512E-02	5.8141E-04	5.8141E-07	grams	kg	
grams			pCi/g				8.0751E-09	8.0751E-12	
4358400		7.2000E+01							
	Pa-231			activity mBq	activity mCi	activity Ci	SNM	source	
9600		3.798E-001	3.798E-001	6.1247E-02	1.6553E-03	1.6553E-06	grams	kg	
grams							3.5220E-05	3.5220E-08	
4358400		4.7000E-02							
	Ra-223			activity mBq	activity mCi	activity Ci	SNM	source	
9600		5.377E-002	5.377E-002	8.6710E-03	2.3435E-04	2.3435E-07	grams	kg	
grams							4.5951E-12	4.5951E-15	
4358400		5.1000E+04							
	Ra-226			activity mBq	activity mCi	activity Ci	SNM	source	
9600		3.134E-001	2.2753E-01	3.6691E-02	9.9166E-04	9.9166E-07	grams	kg	1.37741
grams							9.9166E-07	9.9166E-10	
4358400		1.0000E+00							
	Ra228			activity mBq	activity mCi	activity Ci	SNM	source	
9600		3.912E-001	5.5489E-01	8.9483E-02	2.4184E-03	2.4184E-06	grams	kg	0.705
grams							8.9572E-09	8.9572E-12	
4358400		2.7000E+02							
	TH-227			activity mBq	activity mCi	activity Ci	SNM	source	
9600		1.334E-001	1.334E-001	2.1512E-02	5.8141E-04	5.8141E-07	grams	kg	
grams							1.8755E-11	1.8755E-14	
4358400		3.1000E+04							
	Th-228			activity mBq	activity mCi	activity Ci	SNM	source	
9600		4.164E-001	7.5202E-01	1.2127E-01	3.2776E-03	3.2776E-06	grams	kg	
grams							3.9971E-09	3.9971E-12	0.55371
4358400		8.2000E+02							
	Th-230			activity mBq	activity mCi	activity Ci	SNM	source	
9600		3.912E-001	2.9027E-01	4.6809E-02	1.2651E-03	1.2651E-06	grams	kg	
grams							6.0243E-05	6.0243E-08	1.34771
4358400		2.1000E-02							
	TH-232			activity mBq	activity mCi	activity Ci	SNM	source	
9600		3.912E-001	5.5489E-01	8.9483E-02	2.4184E-03	2.4184E-06	grams	kg	0.705
grams							2.1986E+01	2.1986E-02	
4358400		1.1000E-07							
	U-234			activity mBq	activity mCi	activity Ci	SNM	source	
9600		5.481E+000	4.8671E+00	7.8487E-01	2.1213E-02	2.1213E-05	grams	kg	1.12613
grams							3.4214E-03	3.4214E-06	
4358400		6.2000E-03							
	U-235			activity mBq	activity mCi	activity Ci	SNM	source	
9600		3.112E-001	3.9846E-01	6.4257E-02	1.7367E-03	1.7367E-06	grams	kg	0.781
grams							7.8939E-01	7.8939E-04	
4358400		2.2000E-06							
	U-238			activity mBq	activity mCi	activity Ci	SNM	source	
9600		5.481E+000	7.3968E+00	1.1926E+00	3.2236E-02	3.2236E-05	grams	kg	0.741
grams							9.4818E+01	9.4818E-02	
4358400		3.4000E-07							

Totals for all flag 1 data

			corrected	activity mBq	activity mCi	activity Ci	SNM	source	
9600		1.3877E+01	1.5609E+01	2.5386E+00	6.8611E-02	6.8611E-05	grams	kg	flag1 data NO
			pCi/g	541 will be < than the 540 (MDA not added)			7.8939E-01	1.1681E-01	
76.19047619				data for NORM					
	U-nat		corrected pCi/g	activity mBq	activity mCi	activity Ci		source	
		5.7922E+00	7.7952E+00	1.2571E+00	3.3975E-02	3.3975E-05		kg	
								4.7852E-02	
		7.1000E-07							

	U-nat		corrected pCi/g	activity mBq	activity mCi	activity Ci		source
		1.3877E+01	1.5609E+01	2.5386E+00	6.8611E-02	6.8611E-05		kg total
								6.9841E-02

norm data YES

container #
9165

shipping check sheet (For Form 540)

	Ac-227		corrected	activity mBq	activity mCi	activity Ci	SNM	source	
		5.318E-002	5.318E-002	1.5937E-02	4.3072E-04	4.3072E-07	grams	kg	
grams			pCi/g				5.9823E-09	5.9823E-12	
8099360		7.2000E+01							
	Pa-231			activity mBq	activity mCi	activity Ci	SNM	source	
17840		3.207E-001	3.207E-001	9.6106E-02	2.5975E-03	2.5975E-06	grams	kg	
grams							5.5265E-05	5.5265E-08	
8099360		4.7000E-02							
	Ra-223			activity mBq	activity mCi	activity Ci	SNM	source	
17840		5.420E-002	5.420E-002	1.6242E-02	4.3899E-04	4.3899E-07	grams	kg	
grams							8.6076E-12	8.6076E-15	
8099360		5.1000E+04							
	Ra-226			activity mBq	activity mCi	activity Ci	SNM	source	
17840		1.971E-001	1.4309E-01	4.2882E-02	1.1590E-03	1.1590E-06	grams	kg	1.37741
grams							1.1590E-06	1.1590E-09	
8099360		1.0000E+00							
	Ra228			activity mBq	activity mCi	activity Ci	SNM	source	
17840		3.266E-001	4.6326E-01	1.3883E-01	3.7521E-03	3.7521E-06	grams	kg	0.705
grams							1.3897E-08	1.3897E-11	
8099360		2.7000E+02							
	TH-227			activity mBq	activity mCi	activity Ci	SNM	source	
17840		5.318E-002	5.318E-002	1.5937E-02	4.3072E-04	4.3072E-07	grams	kg	
grams							1.3894E-11	1.3894E-14	
8099360		3.1000E+04							
	Th-228			activity mBq	activity mCi	activity Ci	SNM	source	
17840		2.324E-001	4.1971E-01	1.2578E-01	3.3994E-03	3.3994E-06	grams	kg	
grams							4.1456E-09	4.1456E-12	0.55371
8099360		8.2000E+02							
	Th-230			activity mBq	activity mCi	activity Ci	SNM	source	
17840		3.266E-001	2.4234E-01	7.2623E-02	1.9628E-03	1.9628E-06	grams	kg	
grams							9.3465E-05	9.3465E-08	1.34771
8099360		2.1000E-02							
	TH-232			activity mBq	activity mCi	activity Ci	SNM	source	
17840		3.266E-001	4.6326E-01	1.3883E-01	3.7521E-03	3.7521E-06	grams	kg	0.705
grams							3.4110E+01	3.4110E-02	
8099360		1.1000E-07							
	U-234			activity mBq	activity mCi	activity Ci	SNM	source	
17840		7.970E-001	7.0773E-01	2.1209E-01	5.7322E-03	5.7322E-06	grams	kg	1.12613
grams							9.2455E-04	9.2455E-07	
8099360		6.2000E-03							
	U-235			activity mBq	activity mCi	activity Ci	SNM	source	
17840		1.537E-001	1.9680E-01	5.8976E-02	1.5939E-03	1.5939E-06	grams	kg	0.781
grams							7.2452E-01	7.2452E-04	
8099360		2.2000E-06							
	U-238			activity mBq	activity mCi	activity Ci	SNM	source	
17840		7.970E-001	1.0756E+00	3.2232E-01	8.7115E-03	8.7115E-06	grams	kg	0.741
grams							2.5622E+01	2.5622E-02	
8099360		3.4000E-07							

Totals for all flag 1 data

			corrected	activity mBq	activity mCi	activity Ci	SNM	source	
17840		3.6383E+00	4.1399E+00	1.2566E+00	3.3961E-02	3.3961E-05	grams	kg	flag1 data
			pCi/g	541 will be < than the 540 (MDA not added)			7.2452E-01	5.9733E-02	
141.5873016				data for NORM					NO
	U-nat		corrected pCi/g	activity mBq	activity mCi	activity Ci		source	
		9.5070E-01	1.2724E+00	3.8130E-01	1.0305E-02	1.0305E-05		kg	
								1.4515E-02	
		7.1000E-07							

	U-nat		corrected pCi/g	activity mBq	activity mCi	activity Ci		source	
		3.6383E+00	4.1399E+00	1.2566E+00	3.3961E-02	3.3961E-05		kg total	norm data
								4.8626E-02	
									Yes

Posillico Bros. Asphalt Co.

1610 New Highway, Farmingdale, N.Y. 11735
Plant Tele: 293-2620, 2621

HOT STORAGE

15:53 10-27-04 TICKET NUMBER 9130

13720 lb GROSS

Posillico Bros. Asphalt Co.

1610 New Highway, Farmingdale, N.Y. 11735
Plant Tele: 293-2620, 2621

HOT STORAGE

15:30 10-07-04 TICKET NUMBER 9144

21970 lb GROSS

Posillico Bros. Asphalt Co.

1610 New Highway, Farmingdale, N.Y. 11735
Plant Tele: 293-2620, 2621

HOT STORAGE

15:38 10-07-04 TICKET NUMBER 9145

21380 lb GROSS

Posillico Bros. Asphalt Co.

1610 New Highway, Farmingdale, N.Y. 11735
Plant Tele: 293-2620, 2621

HOT STORAGE

16:01 10-27-04 TICKET NUMBER 9151

19460 lb GROSS

FORM 540 — **Envirocare of Utah, Inc.**

UNIFORM LOW-LEVEL RADIOACTIVE WASTE MANIFEST
SHIPPING PAPER

1 EMERGENCY TELEPHONE NUMBER (Include Area Code): 1-800-424-9300

ORGANIZATION: Chemtrec

2. IS THIS AN "EXCLUSIVE USE" SHIPMENT? ☐ YES ☑ NO

3. TOTAL NUMBER OF PACKAGES IDENTIFIED ON THIS MANIFEST ====> 7

4 DOES EPA REGULATED WASTE REQUIRING A MANIFEST ACCOMPANY THIS SHIPMENT? ☐ YES ☑ NO
If "Yes," provide Manifest Number ====>

EPA MANIFEST NUMBER

5. SHIPPER -- NAME AND FACILITY
GTEOSI
140 Cantiague Rock RD
Hicksville, NY 11801

Utah Generator Site Access Permit No: 020 500 1352
SHIPMENT NUMBER: CEFX-31070

CONTACT: Jean Agostinelli

6. CARRIER -- Name and Address
Priority Transport Services, Inc.
391 Anthony Street
Schenectady, NY 12308

CONTACT: Dispatch

SIGNATURE -- Authorized carrier acknowledging waste receipt

SHIPPER I D NUMBER: 0840-01-977
☐ COLLECTOR
☐ PROCESSOR
☑ GENERATOR TYPE (Specify) I

TELEPHONE NUMBER (Include Area Code): 516-932-9157

EPA I.D. NUMBER: NYR000104976

SHIPPING DATE: 05/11/2005

TELEPHONE (Include Area Code): 800-235-0069

DATE: 05-11-5

7 FORM 540 AND 540A — PAGE 1 OF 2 PAGE(S)
FORM 541 AND 541A — 4 PAGE(S)
FORM 542 AND 542A — None PAGE(S)
ADDITIONAL INFORMATION — None PAGE(S)

8. MANIFEST NUMBER (Use this number on all continuation pages): 0840-01-977

9 CONSIGNEE - Name and Facility
Envirocare of Utah, Inc.
Clive Disposal Site (Bulk Waste Facility)
Interstate 80, Exit 49
Clive, UT 84029

L 84923

CONTACT: Shipping and Receiving
TELEPHONE (Include Area Code): (435)884-0155

SIGNATURE -- Authorized consignee acknowledging waste receipt

DATE: 6-3-05

10 CERTIFICATION
This is to certify that the herein-named materials are properly classified, described, packaged, marked, and labeled and are in proper condition for transportation according to the applicable regulations of the Department of Transportation. This also certifies that the materials are classified, packaged, marked, and labeled and are in proper condition for transportation and disposal as described in accordance with the requirements of 10 CFR Parts 20 and 61, or equivalent state regulations.

AUTHORIZED SIGNATURE | TITLE: Broker | DATE: 5-11-05

11 U S DEPARTMENT OF TRANSPORTATION DESCRIPTION (Including proper shipping name, hazard class, UN ID number, and any additional information)	12 DOT LABEL "RADIOACTIVE"	13 TRANSPORT INDEX	14 PHYSICAL AND CHEMICAL FORM	15 INDIVIDUAL RADIONUCLIDES	16 TOTAL PACKAGE ACTIVITY MBq	mCi	17 LSA/SCO CLASS	18 TOTAL WEIGHT OR VOLUME (Use appropriate units)	19 IDENTIFICATION NUMBER OF PACKAGE
Soil,DOT Non-Regulated, containing Radionuclides	NA	NA	Solid / OXIDES	Ac-227 Pa-231 Ra-223 Ra-228 Ra-228 Th-227 Th-228 Th-230 Th-232 U-234 U-Nat	2.8249E+00	7.6348E-02	NA	19580 LBS; 154.76 FT3	9133
Soil,DOT Non-Regulated, containing Radionuclides	NA	NA	Solid / OXIDES	Ac-227 Pa-231 Ra-223 Ra-226 Ra-228 Th-227 Th-228 Th-230 Th-232 U-234 U-Nat	2.0345E+00	5.4986E-02	NA	9000 LBS; 70.79 FT3	9134
Soil,DOT Non-Regulated, containing Radionuclides	NA	NA	Solid / OXIDES	Ac-227 Pa-231 Ra-223 Ra-226 Ra-228 Th-227 Th-228 Th-230 Th-232 U-234 U-Nat	2.8217E+00	7.6261E-02	NA	22490 LBS; 177.86 FT3	9147

FOR CONSIGNEE USE ONLY

- ___ Record Waste Description Inadequate
- ___ Contamination or Leakage Detected
- ___ Unexpected Exposure Rates Detected
- ___ Labels, Markings, etc. Inadequate
- ___ Container Integrity Inadequate
- ___ Other
- ✓ No Violations Detected on this Shipment

20. TERMS AND CONDITIONS

A. HAZARDOUS MATERIALS Generator represents & warrants that Waste Material __ is (or) ✓ is not a hazardous waste as defined in 40 CFR 261. Where the material is a hazardous waste, this shipment is also accompanied by a separate and completed hazardous waste manifest, along with the appropriate land-disposal restriction notice and/or certification as required by 40 CFR 268.1.

B. TITLE: Upon acceptance at the disposal site by Envirocare of Utah, Inc., and all appropriate regulatory authorities, title to the Waste Material which conforms to Generator's representations herein shall thereupon transfer from Generator and be vested in Envirocare of Utah, Inc

C. WASTE MATERIAL: Generator represents and warrants that all data set forth in this (UNIFORM LOW-LEVEL RADIOACTIVE WASTE MANIFEST) are true and correct in all respects and in accordance with all applicable governmental laws, rules, regulations and Envirocare of Utah Inc.'s facility license.

D. INDEMNIFICATION: Generator agrees to indemnify Envirocare of Utah, Inc., its officers, employees and agents against all losses and liability whatsoever if such losses or liability results from the failure of the Waste Material to conform in all material respects to the data supplied on the (UNIFORM LOW-LEVEL RADIOACTIVE WASTE MANIFEST.) or if this shipment fails to meet the standards prescribed by the Department of Transportation or any governmental agency having jurisdiction over such matters

FORM 540 (04-03)

FORM 540 — **Envirocare of Utah, Inc.**

UNIFORM LOW-LEVEL RADIOACTIVE WASTE MANIFEST

SHIPPING PAPER

1. EMERGENCY TELEPHONE NUMBER (Include Area Code): 1-800-424-9300

ORGANIZATION: Chemtrec

2. IS THIS AN "EXCLUSIVE USE" SHIPMENT? ☐ YES ☑ NO

3. TOTAL NUMBER OF PACKAGES IDENTIFIED ON THIS MANIFEST =====> 7

4. DOES EPA REGULATED WASTE REQUIRING A MANIFEST ACCOMPANY THIS SHIPMENT? ☐ YES ☑ NO
If "Yes," provide Manifest Number =====>

EPA MANIFEST NUMBER

5. SHIPPER -- NAME AND FACILITY
GTEOSI
140 Cantiague Rock RD
Hicksville, NY 11801

SHIPPER I.D. NUMBER: 0840-01-977
☐ COLLECTOR
☐ PROCESSOR

Utah Generator Site Access Permit No.: 020 500 1352
SHIPMENT NUMBER: CEFX-31070
☑ GENERATOR TYPE (Specify) I

CONTACT: Jean Agostinelli
TELEPHONE NUMBER (Include Area Code): 516-932-9157

6. CARRIER -- Name and Address
Priority Transport Services, Inc.
391 Anthony Street
Schenectady, NY 12308

EPA I.D. NUMBER: NYR000104976
SHIPPING DATE: 05/11/2005

CONTACT: Dispatch
TELEPHONE (Include Area Code): 800-235-0069

SIGNATURE -- Authorized carrier acknowledging waste receipt
DATE: 05-11-5

7. FORM 540 AND 540A — PAGE 1 OF 2 PAGE(S)
FORM 541 AND 541A — 4 PAGE(S)
FORM 542 AND 542A — None PAGE(S)
ADDITIONAL INFORMATION — None PAGE(S)

8. MANIFEST NUMBER (Use this number on all continuation pages): 0840-01-977

9. CONSIGNEE - Name and Facility
Envirocare of Utah, Inc.
Clive Disposal Site (Bulk Waste Facility)
Interstate 80, Exit 49
Clive, UT 84029

CONTACT: Shipping and Receiving
TELEPHONE (Include Area Code): (435)884-0155

SIGNATURE -- Authorized consignee acknowledging waste receipt
DATE

10. CERTIFICATION
This is to certify that the herein-named materials are properly classified, described, packaged, marked, and labeled and are in proper condition for transportation according to the applicable regulations of the Department of Transportation. This also certifies that the materials are classified, packaged, marked, and labeled and are in proper condition for transportation and disposal as described in accordance with the requirements of 10 CFR Parts 20 and 61, or equivalent state regulations.

AUTHORIZED SIGNATURE | TITLE: Broker | DATE: 5-11-05

11. U.S. DEPARTMENT OF TRANSPORTATION DESCRIPTION (Including proper shipping name, hazard class, UN ID number, and any additional information)	12. DOT LABEL "RADIOACTIVE"	13. TRANSPORT INDEX	14. PHYSICAL AND CHEMICAL FORM	15. INDIVIDUAL RADIONUCLIDES	16. TOTAL PACKAGE ACTIVITY MBq	mCi	17. LSA/SCO CLASS	18. TOTAL WEIGHT OR VOLUME (Use appropriate units)	19. IDENTIFICATION NUMBER OF PACKAGE
Soil,DOT Non-Regulated, containing Radionuclides	NA	NA	Solid / OXIDES	Ac-227 Pa-231 Ra-223 Ra-226 Ra-228 Th-227 Th-228 Th-230 Th-232 U-234 U-Nat	2.8249E+00	7.6348E-02	NA	19580 LBS; 154.76 FT3	9133
Soil,DOT Non-Regulated, containing Radionuclides	NA	NA	Solid / OXIDES	Ac-227 Pa-231 Ra-223 Ra-226 Ra-228 Th-227 Th-228 Th-230 Th-232 U-234 U-Nat	2.0345E+00	5.4986E-02	NA	9000 LBS; 70.79 FT3	9134
Soil,DOT Non-Regulated, containing Radionuclides	NA	NA	Solid / OXIDES	Ac-227 Pa-231 Ra-223 Ra-226 Ra-228 Th-227 Th-228 Th-230 Th-232 U-234 U-Nat	2.8217E+00	7.6261E-02	NA	22490 LBS; 177.86 FT3	9147

FOR CONSIGNEE USE ONLY

____ Record Waste Description Inadequate
____ Contamination or Leakage Detected
____ Unexpected Exposure Rates Detected
____ Labels, Markings, etc. Inadequate
____ Container Integrity Inadequate
____ Other
____ No Violations Detected on this Shipment

20. TERMS AND CONDITIONS

A. HAZARDOUS MATERIALS: Generator represents & warrants that Waste Material __ is (or) ✓ is not a hazardous waste as defined in 40 CFR 261. Where the material is a hazardous waste, this shipment is also accompanied by a separate and completed hazardous waste manifest, along with the appropriate land-disposal restriction notice and/or certification as required by 40 CFR 268.1.

B. TITLE: Upon acceptance at the disposal site by Envirocare of Utah, Inc., and all appropriate regulatory authorities, title to the Waste Material which conforms to Generator's representations herein shall thereupon transfer from Generator and be vested in Envirocare of Utah, Inc.

C. WASTE MATERIAL: Generator represents and warrants that all data set forth in this (UNIFORM LOW-LEVEL RADIOACTIVE WASTE MANIFEST) are true and correct in all respects and in accordance with all applicable governmental laws, rules, regulations and Envirocare of Utah Inc.'s facility license.

D. INDEMNIFICATION: Generator agrees to indemnify Envirocare of Utah, Inc., its officers, employees and agents against all losses and liability whatsoever if such losses or liability results from the failure of the Waste Material to conform in all material respects to the data supplied on the (UNIFORM LOW-LEVEL RADIOACTIVE WASTE MANIFEST,) or if this shipment fails to meet the standards prescribed by the Department of Transportation or any governmental agency having jurisdiction over such matters.

FORM 540A

Envirocare of Utah, Inc.

UNIFORM LOW-LEVEL RADIOACTIVE WASTE MANIFEST

SHIPPING PAPER (CONTINUATION)

8. MANIFEST NUMBER
(Use this number on all continuation pages)
0840-01-977

11. U.S. DEPARTMENT OF TRANSPORTATION DESCRIPTION (Including proper shipping name, hazard class, UN ID number, and any additional information)	12. DOT LABEL "RADIOACTIVE"	13. TRANSPORT INDEX	14. PHYSICAL AND CHEMICAL FORM	15. INDIVIDUAL RADIONUCLIDES				16. TOTAL PACKAGE ACTIVITY MBq	mCi	17. LSA/SCO CLASS	18. TOTAL WEIGHT OR VOLUME (Use appropriate units)	19. IDENTIFICATION NUMBER OF PACKAGE
Soil,DOT Non-Regulated, containing Radionuclides	NA	NA	Solid / OXIDES	Ac-227	Pa-231	Ra-223	Ra-226	3.1835E+00	8.6041E-02	NA	21230 LBS; 167.86 FT3	9148
				Ra-228	Th-227	Th-228	Th-230					
				Th-232	U-234	U-Nat						
Soil,DOT Non-Regulated, containing Radionuclides	NA	NA	Solid / OXIDES	Ac-227	Pa-231	Ra-223	Ra-226	7.5876E-01	2.0507E-02	NA	17600 LBS; 139.05 FT3	9155
				Ra-228	Th-227	Th-228	Th-230					
				Th-232	U-234	U-Nat						
Soil,DOT Non-Regulated, containing Radionuclides	NA	NA	Solid / OXIDES	Ac-227	Pa-231	Ra-223	Ra-226	1.2581E+00	3.4002E-02	NA	14420 LBS; 113.81 FT3	9209
				Ra-228	Th-227	Th-228	Th-230					
				Th-232	U-234	U-Nat						
Soil,DOT Non-Regulated, containing Radionuclides	NA	NA	Solid / OXIDES	Ac-227	Pa-231	Ra-223	Ra-226	1.7835E+00	4.8203E-02	NA	15570 LBS; 122.94 FT3	9214
				Ra-228	Th-227	Th-228	Th-230					
				Th-232	U-234	U-Nat						

FORM 541

Envirocare of Utah, Inc.

UNIFORM LOW-LEVEL RADIOACTIVE WASTE MANIFEST

CONTAINER AND WASTE DESCRIPTION

Additional Nuclear Regulatory Commission (NRC) Requirements for Control, Transfer and Disposal of Radioactive Waste

1. MANIFEST TOTALS

NUMBER OF PACKAGES/ DISPOSAL CONTAINERS	NET WASTE VOLUME	NET WASTE WEIGHT	SPECIAL NUCLEAR MATERIAL (grams) U-233	U-235	Pu	Total
7	m3 26.8180 / ft3 947.0700	kg 54127.1811 / ton 59.6650	NP	NP	NP	NP

ACTIVITY	ALL NUCLIDES	TRITIUM	C-14	Tc-99	I-129	SOURCE (kg)	
MBq	1.4227E+01	NP	NP	NP	NP	(kg)	5.0712E-01
mCi	3.8452E-01	NP	NP	NP	NP	(tons)	5.5901E-04

2. MANIFEST NUMBER 0840-01-977

3. PAGE 1 OF 4 PAGE(S)

4. SHIPPER NAME GTEOSI

SHIPMENT ID NUMBER 0840-01-977

5. CONTAINER IDENTIFICATION NUMBER/ GENERATOR ID NUMBER(S)	6. CONTAINER DESCRIPTION (See Note 1 & Note 1A)	7. VOLUME (m3) / (ft3)	8. WASTE AND CONTAINER WEIGHT (kg) / (ton)	9. SURFACE RADIATION LEVEL (mSv/hr) / (mrem/hr)	10. SURFACE CONTAMINATION (MBq/100 cm2) / (dpm/100cm2) ALPHA	BETA-GAMMA	11. WASTE DESCRIPTOR (See Note 2 & Note 2A)	12. APPROXIMATE WASTE VOLUME(S) IN CONTAINER (m3) / (FT3)	13. SOLIDIFICATION OR STABILIZATION MEDIA (See Note 3)	14. CHEMICAL DESCRIPTION: CHEMICAL FORM/ CHELATING AGENT	WEIGHT % CHELATING AGENT IF > 0.1%	15. RADIOLOGICAL DESCRIPTION: INDIVIDUAL RADIONUCLIDES AND ACTIVITY (MBq) AND CONTAINER TOTAL; OR CONTAINER TOTAL ACTIVITY AND RADIONUCLIDE PERCENT: RADIONUCLIDES	pCi/gm	MBq	mCi	16. WASTE CLASSIFICATION AS-Class A Stable AU-Class A Unstable B-Class B C-Class C
9133/GTEOSI	19 Strong Tight Container Loaded in Gondola	4.3823	8881.3392	0.0001	<3.6740E-06	<3.6740E-05	22,59-CONCRETE,59 -MISC DEBRIS-HJ	4.3823	100	OXIDES/NONE	0.00	Ac-227	6.23900E-02	2.0437E-02	5.5234E-04	AU
		154.7600	9.7900	0.0100	<2.2000E+02	<2.2000E+03		154.7600				Pa-231	1.94000E-01	(6.3548E-02)	(1.7175E-03)	
												Ra-223	2.45600E-02	(8.0449E-03)	(2.1743E-04)	
												Ra-226	1.50355E-01	4.9251E-02	1.3311E-03	
												Ra-228	3.90071E-01	1.2777E-01	3.4533E-03	
												Th-227 [1.7817E-14 kg]	6.23900E-02	2.0437E-02	5.5234E-04	
												Th-228 [5.9411E-12 kg]	5.50288E-01	1.8025E-01	4.8717E-03	
												Th-230 [8.6022E-08 kg]	2.04050E-01	6.6841E-02	1.8065E-03	
												Th-232 [3.1394E-02 kg]	3.90071E-01	1.2777E-01	3.4533E-03	
												U-234 [3.5896E-06 kg]	2.51392E+00	8.2347E-01	2.2256E-02	
												U-Nat [5.0897E-02 kg]	4.08184E+00	1.3371E+00	3.6137E-02	
												Subtotal		2.7533E+00	7.4414E-02	
												Total		2.7533E+00	7.4414E-02	
												Source [8.2294E-02 kg]				
9134/GTEOSI	19 Strong Tight Container Loaded in Gondola	2.0045	4082.3316	0.0001	<3.6740E-06	<3.6740E-05	22,59-CONCRETE,59 -MISC DEBRIS-HJ	2.0045	100	OXIDES/NONE	0.00	Ac-227	6.55600E-02	(9.8235E-03)	(2.6550E-04)	AU
		70.7900	4.5000	0.0100	<2.2000E+02	<2.2000E+03		70.7900				Pa-231	1.41300E-01	(2.1172E-02)	(5.7222E-04)	
												Ra-223	7.61300E-02	1.1407E-02	3.0830E-04	
												Ra-226	2.02844E-01	3.0394E-02	8.2146E-04	
												Ra-228	4.38156E-01	6.5653E-02	1.7744E-03	
												Th-227 [8.5644E-15 kg]	6.55600E-02	(9.8235E-03)	(2.6550E-04)	
												Th-228 [3.6319E-12 kg]	7.35403E-01	1.1019E-01	2.9782E-03	
												Th-230 [4.4200E-08 kg]	2.29204E-01	3.4343E-02	9.2820E-04	
												Th-232 [1.6131E-02 kg]	4.38156E-01	6.5653E-02	1.7744E-03	

Note 1: Container Description Codes. For containers/ waste requiring disposal in approved structural over-packs the numerical code must be followed by "-OP."

1. Wooden Box or Crate
2. Metal Box
3. Plastic Drum or Pail
4. Metal Drum or Pail
5. Metal Tank or Liner
6. Concrete Tank or Liner
7. Polyethlene Tank or Liner
8. Fiberglass Tank or Liner
9. Demineralizer
10. Gas Cylinder
11. Bulk, Unpackaged Waste
12. Unpackaged Components
13. High Integrity Container
19. Other. Describe in Item 6, or additional page

Note 1A: Bulk Packaging Description Codes. (Choose one code as may be applicable.)

A Gondola
B Intermodal
C End-Dump
D Roll-off
E Seavan

NOTE 2: Waste Descriptor Codes. (Choose up to three which predominate by volume.)

20. Charcoal
21. Incinerator Ash
22. Soil
23. Gas
24. Oil
25. Aqueous Liquid
26. Filter Media
27. Mechanical Filter
28. EPA or State Hazardous
29. Demolition Rubble
30. Cation Ion-exchange Media
31. Anion Ion-exchange Media
32. Mixed Bed Ion-exchange Media
33. Contaminated Equipment
34. Organic Liquid (except oil)
35. Glassware or Labware
36. Sealed Source/Device
37. Paint or Plating
38. Evaporator Bottoms/Sludges/ Concentrates
39. Compactible Trash
40. Noncompactible Trash
41. Animal Carcass
42. Biological Material (except animal carcass)
43. Activated Material
59. Other. Describe in item 11, or additional page

NOTE 2A: Specific Waste Descriptions (Choose all applicable codes.)

G Dewatered
H Solid
I Combustible
J Non-combustible
K Air Filtration Filters
L Asbestos

Note3: Solidification and Stabilization Media Codes. (Choose up to three which predominate by volume.) For media meeting disposal site structural stability requirements, the numerical code must be followed by "-S." and the media vendor and brand name must also be identified in Item 13. Code 100=NONE REQUIRED.

Solidification

90. Cement
91. Concrete (encapsulation)
92. Bitumen
93. Vinyl Chloride
94. Vinyl Ester Styrene
99. Other. Describe in item 13, or additional page
100. None Required.

FORM 541 (04-03)

FORM 541A

UNIFORM LOW-LEVEL RADIOACTIVE WASTE MANIFEST

CONTAINER AND WASTE DESCRIPTION (CONTINUATION)

Envirocare of Utah, Inc.

2. MANIFEST NUMBER 0840-01-977

DISPOSAL CONTAINER DESCRIPTION							WASTE DESCRIPTION FOR EACH WASTE TYPE IN CONTAINER									
							PHYSICAL DESCRIPTION			14. CHEMICAL DESCRIPTION		15. RADIOLOGICAL DESCRIPTION				16. WASTE CLASSIFICATION AS-Class A Stable AU-Class A Unstable B-Class B C-Class C
5. CONTAINER IDENTIFICATION NUMBER/ GENERATOR ID NUMBER(S)	6. CONTAINER DESCRIPTION (See Note 1 & Note 1A)	7. VOLUME (m3)/(ft3)	8. WASTE AND CONTAINER WEIGHT (kg)/(ton)	9. SURFACE RADIATION LEVEL (mSv/hr)/(mrem/hr)	10. SURFACE CONTAMINATION (MBq/100 cm2)/(dpm/100cm2) ALPHA	BETA-GAMMA	11. WASTE DESCRIPTOR (See Note 2 & Note 2A)	12. APPROXIMATE WASTE VOLUME(S) IN CONTAINER (m3)/(FT3)	13. SOLIDIFICATION OR STABILIZATION MEDIA (See Note 3)	CHEMICAL FORM/ CHELATING AGENT	WEIGHT % CHELATING AGENT IF > 0.1%	INDIVIDUAL RADIONUCLIDES AND ACTIVITY (MBq) AND CONTAINER TOTAL; OR CONTAINER TOTAL ACTIVITY AND RADIONUCLIDE PERCENT: RADIONUCLIDES	pCi/gm	MBq	mCi	
												U-234 [2.7986E-06 kg]	4.28459E+00	6.4199E-01	1.7351E-02	
												U-Nat [3.9361E-02 kg]	6.90084E+00	1.0340E+00	2.7946E-02	
												Subtotal		1.9936E+00	5.3882E-02	
												Total		1.9936E+00	5.3882E-02	
												Source [5.5495E-02 kg]				
9147/GTEOSI	19 Strong Tight Container Loaded in Gondola	5.0364	10201.2931	0.0001	<3.6740E-06	<3.6740E-05	22,59-CONCRETE,59 -MISC DEBRIS-HJ	5.0364	100	OXIDES/NONE	0.00	Ac-227	8.89500E-02	3.3485E-02	9.0499E-04	AU
												Pa-231	2.70000E-01	(1.0164E-01)	(2.7470E-03)	
												Ra-223	5.82700E-02	(2.1935E-02)	(5.9285E-04)	
		177.8600	11.2450	0.0100	<2.2000E+02	<2.2000E+03		177.8600				Ra-226	2.37983E-01	8.9588E-02	2.4213E-03	
												Ra-228	7.89787E-01	2.9731E-01	8.0354E-03	
												Th-227 [2.9193E-14 kg]	8.89500E-02	3.3485E-02	9.0499E-04	
												Th-228 [9.6869E-12 kg]	7.80734E-01	2.9390E-01	7.9433E-03	
												Th-230 [2.0016E-07 kg]	4.13145E-01	1.5553E-01	4.2034E-03	
												Th-232 [7.3049E-02 kg]	7.89787E-01	2.9731E-01	8.0354E-03	
												U-234 [2.2922E-06 kg]	1.39682E+00	5.2581E-01	1.4211E-02	
												U-Nat [3.6988E-02 kg]	2.58119E+00	9.7166E-01	2.6261E-02	
												Subtotal		2.6981E+00	7.2921E-02	
												Total		2.6981E+00	7.2921E-02	
												Source [1.1004E-01 kg]				
9148/GTEOSI	19 Strong Tight Container Loaded in Gondola	4.7533	9629.7667	0.0001	<3.6740E-06	<3.6740E-05	22,59-CONCRETE,59 -MISC DEBRIS-HJ	4.7533	100	OXIDES/NONE	0.00	Ac-227	1.08500E-01	3.8547E-02	1.0418E-03	AU
												Pa-231	4.90800E-01	1.7437E-01	4.7127E-03	
												Ra-223	7.79400E-02	(2.7690E-02)	(7.4839E-04)	
		167.8600	10.6150	0.0100	<2.2000E+02	<2.2000E+03		167.8600				Ra-226	3.82530E-01	1.3590E-01	3.6731E-03	
												Ra-228	9.33333E-01	3.3159E-01	8.9620E-03	
												Th-227 [3.3607E-14 kg]	1.08500E-01	3.8547E-02	1.0418E-03	
												Th-228 [1.5053E-11 kg]	1.28551E+00	4.5673E-01	1.2344E-02	
												Th-230 [2.2324E-07 kg]	4.88236E-01	1.7346E-01	4.6881E-03	
												Th-232 [8.1472E-02 kg]	9.33333E-01	3.3159E-01	8.9620E-03	
												U-234 [2.2527E-06 kg]	1.45454E+00	5.1678E-01	1.3967E-02	
												U-Nat [3.6481E-02 kg]	2.69747E+00	9.5834E-01	2.5901E-02	
												Subtotal		3.1559E+00	8.5294E-02	
												Total		3.1559E+00	8.5294E-02	

FORM 541A

UNIFORM LOW-LEVEL RADIOACTIVE WASTE MANIFEST

Envirocare of Utah, Inc.

2. MANIFEST NUMBER 0840-01-977

CONTAINER AND WASTE DESCRIPTION (CONTINUATION)

DISPOSAL CONTAINER DESCRIPTION							WASTE DESCRIPTION FOR EACH WASTE TYPE IN CONTAINER									
							PHYSICAL DESCRIPTION			14. CHEMICAL DESCRIPTION		15. RADIOLOGICAL DESCRIPTION				16. WASTE CLASSIFICATION AS-Class A Stable AU-Class A Unstable B-Class B C-Class C
5. CONTAINER IDENTIFICATION NUMBER/ GENERATOR ID NUMBER(S)	6. CONTAINER DESCRIPTION (See Note 1 & Note 1A)	7. VOLUME (m3)/(ft3)	8. WASTE AND CONTAINER WEIGHT (kg)/(ton)	9. SURFACE RADIATION LEVEL (mSv/hr)/(mrem/hr)	10. SURFACE CONTAMINATION (MBq/100 cm2)/(dpm/100cm2) ALPHA	BETA-GAMMA	11. WASTE DESCRIPTOR (See Note 2 & Note 2A)	12. APPROXIMATE WASTE VOLUME(S) IN CONTAINER (m3)/(FT3)	13. SOLIDIFICATION OR STABILIZATION MEDIA (See Note 3)	CHEMICAL FORM/ CHELATING AGENT	WEIGHT % CHELATING AGENT IF > 0.1%	INDIVIDUAL RADIONUCLIDES AND ACTIVITY (MBq) AND CONTAINER TOTAL; OR CONTAINER TOTAL ACTIVITY AND RADIONUCLIDE PERCENT: RADIONUCLIDES	pCi/gm	MBq	mCi	
												Source [1.1796E-01 kg]				
9155/GTEOSI	19 Strong Tight Container Loaded in Gondola	3.9375	7983.2262	0.0001	<3.6740E-06	<3.6740E-05	22,59-CONCRETE,59 -MISC DEBRIS-HJ	3.9375	100	OXIDES/NONE	0.00	Ac-227	4.01200E-02	1.1807E-02	3.1912E-04	AU
		139.0500	8.8000	0.0100	<2.2000E+02	<2.2000E+03		139.0500				Pa-231	1.76300E-01	(5.1885E-02)	(1.4023E-03)	
												Ra-223	3.81800E-02	(1.1237E-02)	(3.0369E-04)	
												Ra-226	1.23347E-01	3.6301E-02	9.8112E-04	
												Ra-228	3.64397E-01	1.0724E-01	2.8984E-03	
												Th-227 [1.0294E-14 kg]	4.01200E-02	1.1807E-02	3.1912E-04	
												Th-228 [3.8225E-12 kg]	3.94069E-01	1.1598E-01	3.1345E-03	
												Th-230 [7.2200E-08 kg]	1.90620E-01	5.6099E-02	1.5162E-03	
												Th-232 [2.6350E-02 kg]	3.64397E-01	1.0724E-01	2.8984E-03	
												U-234 [3.3653E-07 kg]	2.62314E-01	(7.7201E-02)	(2.0865E-03)	
												U-Nat [6.5460E-03 kg]	5.84310E-01	1.7196E-01	4.6477E-03	
												Subtotal		6.1843E-01	1.6715E-02	
												Total		6.1843E-01	1.6715E-02	
												Source [3.2896E-02 kg]				
9209/GTEOSI	19 Strong Tight Container Loaded in Gondola	3.2227	6540.8024	0.0001	<3.6740E-06	<3.6740E-05	22,59-CONCRETE,59 -MISC DEBRIS-HJ	3.2227	100	OXIDES/NONE	0.00	Ac-227	4.18900E-02	(1.0091E-02)	(2.7272E-04)	AU
		113.8100	7.2100	0.0080	<2.2000E+02	<2.2000E+03		113.8100				Pa-231	2.23100E-01	5.3743E-02	1.4525E-03	
												Ra-223	8.02500E-02	1.9331E-02	5.2246E-04	
												Ra-226	1.79032E-01	4.3127E-02	1.1656E-03	
												Ra-228	5.98156E-01	1.4409E-01	3.8942E-03	
												Th-227 [8.7974E-15 kg]	4.18900E-02	(1.0091E-02)	(2.7272E-04)	
												Th-228 [4.7963E-12 kg]	6.04107E-01	1.4552E-01	3.9330E-03	
												Th-230 [9.7005E-08 kg]	3.12901E-01	7.5373E-02	2.0371E-03	
												Th-232 [3.5402E-02 kg]	5.98156E-01	1.4409E-01	3.8942E-03	
												U-234 [9.9119E-07 kg]	9.43941E-01	2.2738E-01	6.1454E-03	
												U-Nat [1.4665E-02 kg]	1.59934E+00	3.8524E-01	1.0412E-02	
												Subtotal		1.2379E+00	3.3456E-02	
												Total		1.2379E+00	3.3456E-02	
												Source [5.0068E-02 kg]				

FORM 541A

UNIFORM LOW-LEVEL RADIOACTIVE WASTE MANIFEST

CONTAINER AND WASTE DESCRIPTION (CONTINUATION)

Envirocare of Utah, Inc.

2. MANIFEST NUMBER 0840-01-977

DISPOSAL CONTAINER DESCRIPTION							WASTE DESCRIPTION FOR EACH WASTE TYPE IN CONTAINER										
							PHYSICAL DESCRIPTION			14. CHEMICAL DESCRIPTION		15. RADIOLOGICAL DESCRIPTION				16. WASTE CLASSIFICATION AS-Class A Stable AU-Class A Unstable B-Class B C-Class C
5. CONTAINER IDENTIFICATION NUMBER/ GENERATOR ID NUMBER(S)	6. CONTAINER DESCRIPTION (See Note 1 & Note 1A)	7. VOLUME (m3) / (ft3)	8. WASTE AND CONTAINER WEIGHT (kg) / (ton)	9. SURFACE RADIATION LEVEL (mSv/hr) / (mrem/hr)	10. SURFACE CONTAMINATION (MBq/100 cm2) / (dpm/100cm2) ALPHA	BETA-GAMMA	11. WASTE DESCRIPTOR (See Note 2 & Note 2A)	12. APPROXIMATE WASTE VOLUME(S) IN CONTAINER (m3) / (FT3)	13. SOLIDIFICATION OR STABILIZATION MEDIA (See Note 3)	CHEMICAL FORM/ CHELATING AGENT	WEIGHT % CHELATING AGENT IF > 0.1%	INDIVIDUAL RADIONUCLIDES AND ACTIVITY (MBq) AND CONTAINER TOTAL; OR CONTAINER TOTAL ACTIVITY AND RADIONUCLIDE PERCENT: RADIONUCLIDES	pCi/gm	MBq	mCi	
9214/GTEOSI	19 Strong Tight Container Loaded in Gondola	3.4813	7062.4337	0.0001	<3.6740E-06	<3.6740E-05	22,59-CONCRETE,59 -MISC DEBRIS-HJ	3.4813	100	OXIDES/NONE	0.00	Ac-227	7.64400E-02	1.9890E-02	5.3756E-04	AU
		122.9400	7.7850	0.0060	<2.2000E+02	<2.2000E+03		122.9400				Pa-231	3.67100E-01	9.5519E-02	2.5816E-03	
												Ra-223	5.21500E-02	(1.3569E-02)	(3.6674E-04)	
												Ra-226	1.90285E-01	4.9513E-02	1.3382E-03	
												Ra-228	5.14326E-01	1.3383E-01	3.6170E-03	
												Th-227 [1.7341E-14 kg]	7.64400E-02	1.9890E-02	5.3756E-04	
												Th-228 [5.9306E-12 kg]	6.91517E-01	1.7993E-01	4.8631E-03	
												Th-230 [9.0099E-08 kg]	2.69049E-01	7.0008E-02	1.8921E-03	
												Th-232 [3.2882E-02 kg]	5.14326E-01	1.3383E-01	3.6170E-03	
												U-234 [1.7344E-06 kg]	1.52913E+00	3.9790E-01	1.0754E-02	
												U-Nat [2.5491E-02 kg]	2.57357E+00	6.6966E-01	1.8099E-02	
												Subtotal		1.7700E+00	4.7837E-02	
												Total		1.7700E+00	4.7837E-02	
												Source [5.8374E-02 kg]				
Shipment Totals		26.8180	54381.1929									Source [5.0712E-01 kg]		1.4227E+01	3.8452E-01	
		947.0700	59.9450													

FORM 541A (04-03)

Envirocare of Utah, Inc.

ADDITIONAL NOTES

Manifest Number
0840-01-977
PAGE 1

New York State Waste Transporter Part 364 permit No. 4A-288
New York State Waste Transporter Part 381 permit Number 4A-288

UNIFORM LOW-LEVEL RADIOACTIVE WASTE MANIFEST
ISOTOPES REPORT

For Manifest # 0840-01-977
Envirocare of Utah, Inc.

	Total Activity		
Isotope	**(MBq)**	**(mCi)**	**(Ci)**
Ac-227	1.4408E-01	3.8941E-03	3.8941E-06
Pa-231	5.6187E-01	1.5186E-02	1.5186E-05
Ra-223	1.1321E-01	3.0599E-03	3.0599E-06
Ra-226	4.3407E-01	1.1732E-02	1.1732E-05
Ra-228	1.2075E+00	3.2635E-02	3.2635E-05
Th-227	1.4408E-01	3.8941E-03	3.8941E-06
Th-228	1.4825E+00	4.0067E-02	4.0067E-05
Th-230	6.3165E-01	1.7072E-02	1.7072E-05
Th-232	1.2075E+00	3.2635E-02	3.2635E-05
U-234	3.2105E+00	8.6770E-02	8.6770E-05
U-Nat	5.5279E+00	1.4940E-01	1.4940E-04

BagNum	MANIFEST GROSS WEIGHT
9214	15570

Shipm Survey

Survey Number: GTEOSI-05-00313 Date: 1-27-05 Time: 10:45

Waste Container Type: Super Sack Intermodal Other: Waste

Waste Container ID #: 9214 Storage Bin: 42C Gross Weight: 15570 lbs

	Ludlum 3030		Ludlum 3030		Ludlum 3030		Ludlum Mod, 19
Serial #	190646		191265				193615
Probe #	N/A		N/A		N/A		N/A
Calibration Due Date:	12-13-05		4-20-05				19 May 05
	α	β	α	β	α	β	
Background	0 cpm	25 cpm	0 cpm	25 cpm	cpm	cpm	5 μR/hr
Efficiency	29 %	25 %	29 %	25 %	%	N/A %	
MDA	25 dpm	130 dpm	25 dpm	130 dpm	dpm	dpm	

Maximum Contact Dose Rate: 0.006 mrem/hr Transport Index: 0.0 mrem/hr

	α cpm	α dpm/100 cm2	β cpm	β dpm/100 cm2
ALARA Limit	N/A	60	N/A	500
Smear #				
1	1	<MDA	36	<MDA
2	0		22	
3	0		32	
4	0		26	
5	1		34	
6	0	<MDA	29	<MDA

Smear Locations: 1 - Bottom 2 - Front 3 - Right Side 4 - Back 5 - Left Side 6 - Top

George Economos — Surveyor Name

George Economos — Surveyor Signature

Supervisor Approval

24893-S-SHEET9214-99.9

Date: 01/26/05 Time:1510

1-27-05 10:48 Bag# 9214

15570 lb GR

012705 1048 9214 0015570

BagNum	MANIFEST GROSS WEIGHT
9209	14420

Shipm Survey

Survey Number: GTEOSI-05-00307 Date: 1-26-05 Time: 1100

Waste Container Type: Super Sack Intermodal Other: WASTE

Waste Container ID #: 9209 Storage Bin: 40 Gross Weight: 14420 lbs

	Ludlum 3030		Ludlum 3030		Ludlum 3030		L-19
Serial #	190646		191265				193615
Probe #	N/A		N/A		N/A		N/A
Calibration Due Date:	12-13-05		4-20-05				5-19-05
	α	β	α	β	α	β	
Background	0 cpm	25 cpm	0 cpm	25 cpm	cpm	cpm	5 μR/hr
Efficiency	29 %	25 %	29 %	25 %	%	N/A %	
MDA	25 dpm	130 dpm	25 dpm	130 dpm	dpm	dpm	

Maximum Contact Dose Rate: .008 mrem/hr Transport Index: ~~.01~~ 0 mrem/hr

	α cpm	α dpm/100 cm2	β cpm	β dpm/100 cm2
ALARA Limit	N/A	60	N/A	500
Smear #				
1	0	<MDA	32	<MDA
2	0		29	
3	1		26	
4	1		28	
5	1		26	
6	0		30	

Smear Locations: 1 - Bottom 2 - Front 3 - Right Side 4 - Back 5 - Left Side 6 - Top

JOHN MITCHELL SR
Surveyor Name

Surveyor Signature

Supervisor Approval

24682-S-SHEET9209-99.9
Date: 01/20/05 Time:1614

1-25-05 11:40 Bag# 9209
14420 lb GR
012505 1140 9209 0014420

Shipment Survey

Survey Number: GTEOSI-04-7580 Date: 10-20-04 Time: 1314

Waste Container Type: Super Sack Intermodal Other: N/A

Waste Container ID #: 9133 Storage Bin: 39 Gross Weight: 19580 lbs

	Ludlum 3030		Ludlum 3030		Ludlum 3030		LMI 125
Serial #	190641		191265				176124
Probe #	N/A		N/A		N/A		N/A
Calibration Due Date:	3-4-05		4-20-05				3-8-05
	α	β	α	β	α	β	
Background	0 cpm	25 cpm	0 cpm	25 cpm	cpm	cpm	5 μR/hr
Efficiency	29 %	25 %	29 %	25 %	N/A %	N/A %	
MDA	25 dpm	130 dpm	25 dpm	130 dpm	dpm	dpm	

Maximum Contact Dose Rate: 0.010 mrem/hr Transport Index: 0 mrem/hr

	α cpm	α dpm/100 cm2	β cpm	β dpm/100 cm2
ALARA Limit	N/A	60	N/A	500
Smear #				
1	0	<MDA	29	<MDA
2	1		28	
3	0		26	
4	0		28	
5	0		31	
6	0		36	

Smear Locations: 1 - Bottom 2 - Front 3 - Right Side 4 - Back 5 - Left Side 6 - Top

S. ECKERT
Surveyor Name

Surveyor Signature

John Kotchaff, Sr.
Supervisor Approval

18142-S-LPH149133-04.0
Date: 10/04/04 Time:1637

10-20-04 13:14 Bag# 9133
19580 lb GR
102004 1314 9133 0019580

Shipment Survey

Survey Number: GTEOSI-04-7576 Date: 10-12-04 Time: 0816

Waste Container Type: Super Sack Intermodal Other: N/A

Waste Container ID #: 9134 Storage Bin: 39 Gross Weight: 9000 lbs

	Ludlum 3030		Ludlum 3030		Ludlum 3030		L-19
Serial #	190641		191265				193615
Probe #	N/A		N/A		N/A		N/A
Calibration Due Date:	3-4-05		4-20-05				5-19-05
	α	β	α	β	α	β	
Background	0 cpm	25 cpm	0 cpm	25 cpm	cpm	cpm	6 μR/hr
Efficiency	29 %	25 %	29 %	25 %	N/A %	N/A %	
MDA	25 dpm	130 dpm	25 dpm	130 dpm	dpm	dpm	

Maximum Contact Dose Rate: 6.010 mrem/hr Transport Index: 0 mrem/hr

	α cpm	α dpm/100 cm2	β cpm	β dpm/100 cm2
ALARA Limit	N/A	60	N/A	500
Smear #				
1	0	<MDA	36	<MDA
2	0		31	
3	0		28	
4	0		29	
5	0		35	
6	0		32	

Smear Locations: 1 - Bottom 2 - Front 3 - Right Side 4 - Back 5 - Left Side 6 - Top

S. Eckert
Surveyor Name

Surveyor Signature

John Mitchell, Sr.
Supervisor Approval

18650-S-09G219134-99.9
Date: 10/11/04 Time:0941

10-12-04 8:16 Bag# 9134
9000 lb GR
101204 0816 9134 0009000

Shipment Survey

Survey Number: GTEOSI-04-7574 Date: 10-7-04 Time: 1549

Waste Container Type: Super Sack Intermodal Other: N/A

Waste Container ID #: 9147 Storage Bin: 38 Gross Weight: 22490 lbs

	Ludlum 3030		Ludlum 3030		Ludlum 3030		Ludlum 19
Serial #	190641		191265				193615
Probe #	N/A		N/A		N/A		N/A
Calibration Due Date:	3-4-05		4-20-05				5-19-05
	α	β	α	β	α	β	
Background	0 cpm	25 cpm	0 cpm	25 cpm	cpm	cpm	6 μR/hr
Efficiency	29 %	25 %	29 %	25 %	N/A %	N/A %	
MDA	25 dpm	130 dpm	25 dpm	130 dpm	dpm	dpm	

Maximum Contact Dose Rate: 0.010 mrem/hr Transport Index: 0 mrem/hr

	α cpm	α dpm/100 cm2	β cpm	β dpm/100 cm2
ALARA Limit	N/A	60	N/A	500
Smear #				
1	0	<MDA	30	<MDA
2	0		24	
3	0		30	
4	1		23	
5	0		27	
6	0		29	

Smear Locations: 1 - Bottom 2 - Front 3 - Right Side 4 - Back 5 - Left Side 6 - Top

S. Eckert
Surveyor Name

Surveyor Signature

George Economy
Supervisor Approval

18517-S-LPH169147-04.0
Date: 10/07/04 Time:1502

10-07-04 15:49 Bag# 9147
22490 lb GR
100704 1549 9147 0022490

NYSDEC:V00089-1; URS27010-039

Shipment Survey

Survey Number: GTEOSI-04-7575 Date: 10-7-04 Time: 1556

Waste Container Type: Super Sack Intermodal Other: N/A

Waste Container ID #: 9148 Storage Bin: 38 Gross Weight: 21230 lbs

	Ludlum 3030		Ludlum 3030		Ludlum 3030		Ludlum 19
Serial #	190641		191265				193615
Probe #	N/A		N/A		N/A		N/A
Calibration Due Date:	3-4-05		4-20-05				5-19-05
	α	β	α	β	α	β	
Background	0 cpm	25 cpm	0 cpm	25 cpm	cpm	cpm	6 μR/hr
Efficiency	29 %	25 %	29 %	25 %	N/A %	N/A %	
MDA	25 dpm	130 dpm	25 dpm	130 dpm	dpm	dpm	

Maximum Contact Dose Rate: 0.010 mrem/hr Transport Index: 0 mrem/hr

	α cpm	α dpm/100 cm2	β cpm	β dpm/100 cm2
ALARA Limit	N/A	60	N/A	500
Smear #				
1	1	<MDA	22	<MDA
2	0		27	
3	0		33	
4	0		28	
5	0		31	
6	0		31	

Smear Locations: 1 - Bottom 2 - Front 3 - Right Side 4 - Back 5 - Left Side 6 - Top

S. Eckert — Surveyor Name

S Eckert — Surveyor Signature

George Economy — Supervisor Approval

18518-S-LPH169148-04.0
Date: 10/07/04 Time:1526

10-07-04 15:56 Bag# 9148
21230 lb GR
100704 1556 9148 0021230

BagNum	MANIFEST GROSS WEIGHT
9155	17600

Shipment Survey

Survey Number: GTEOSI-04-7583 Date: 10-26-04 Time: 1326

Waste Container Type: Super Sack Intermodal Other: NA

Waste Container ID #: 9155 Storage Bin: 40 Gross Weight: 17600 lbs

	Ludlum 3030		Ludlum 3030		Ludlum 3030		EMI 19
Serial #	190641		191265				196117
Probe #	N/A		N/A		N/A		N/A
Calibration Due Date:	3-4-05		4-20-05				8-10-05
	α	β	α	β	α	β	
Background	0 cpm	25 cpm	0 cpm	25 cpm	cpm	cpm	6 μR/hr
Efficiency	29 %	25 %	29 %	25 %	N/A %	N/A %	
MDA	25 dpm	130 dpm	25 dpm	130 dpm	dpm	dpm	

Maximum Contact Dose Rate: 0.010 mrem/hr Transport Index: 0 mrem/hr

	α cpm	α dpm/100 cm2	β cpm	β dpm/100 cm2
ALARA Limit	N/A	60	N/A	500
Smear #				
1	1	<MDA	27	<MDA
2	0		27	
3	0		37	
4	0		27	
5	0		29	
6	0		29	

Smear Locations: 1 - Bottom 2 - Front 3 - Right Side 4 - Back 5 - Left Side 6 - Top

S. ECKART

Surveyor Name

Surveyor Signature

John Mitchell, Sr.

Supervisor Approval

19264-S-LPH039155-99.9
Date: 10/20/04 Time:1241

10-26-04 13:26 Bag# 9155
17600 lb GR

102604 1326 9155 0017600

ENVIROCARE *OF UTAH, LLC.*

THE SAFE ALTERNATIVE

CERTIFICATE OF DISPOSAL

GTE Operations Support Inc., Irving

This Certificate acknowledges that the following manifested shipments:

Shipment	Disposal Location	Date	Shipment	Disposal Location	Date
0840-01-0977	Class A	06/10/05 11:58:51	0840-01-0981	Class A	06/10/05 11:34:19
0840-01-0982	Class A	06/10/05 11:58:51	0840-01-0983	Class A	06/10/05 11:34:19
0840-01-0984	Class A	06/10/05 10:04:57	0840-01-0985	Class A	06/10/05 10:04:57
0840-01-0986	Class A	06/10/05 11:34:19	0840-04-0029	Class A	06/10/05 11:58:51

Representing 9,190.86 cubic feet of waste has been disposed of at the above listed Disposal Facility. Disposal is subject to Envirocare's Radioactive Material License, all other applicable licenses, permits and regulations, and the Disposal Agreement.

Brent Anderson
Director of LLRW Operations

6/14/05
Date

605 N. 5600 W, Salt Lake City, Utah 84116 Telephone (801) 532-1330

Attachment 5.10
TRANSPORT VEHICLE RELEASE CHECKLIST

Shipment Number- 0840.01-977

Truck Number- 38 - R406

Trailer Number- 225.226

A qualified MHF-LS shipping technician shall verify that each item listed is satisfactory and then place a Check Mark in the corresponding box.

1. Driver possesses a valid driver's license with a HAZMAT endorsement ☑
2. Driver possesses a valid copy of a "Research and Special Programs Administration" U.S. DOT Hazmat Registration Certificate ☑
3. If manifested on a Hazardous Waste Manifest, ensure the carrier possesses a current EPA ID # ☐
4. Lamps are operable ☑
   - Headlights and Brights
   - Warning Lights and Flashers
   - Brake Lights
5. Coupling devices are intact ☑
6. Tires are sufficient ☑
   - No fabric is exposed through tread or sidewall
   - Front wheel tires must have tread pattern to a depth of ≥1/8 inch
   - Other tires must have tread pattern to a depth of ≥1/16 inch
   - Re-treaded tires are not authorized
7. Horn is operable ☑
8. Windshield wipers are operable ☑
9. Rear-vision mirrors are adequate (1 on each side) ☑
10. Emergency equipment is on-hand and accessible ☑
    - Fire extinguisher
    - Warning devices- bi-directional emergency reflectors, triangles (3), or liquid burning flares
11. General vehicle integrity is satisfactory ☑
    - Frame appears undamaged
    - Flooring is sufficient to support load
    - If a closed transport vehicle, vehicle is closed
    - Vehicle is otherwise in unimpaired physical condition
12. Vehicle truck and trailer have current DOT inspection stickers on both components (Good for 1 year from date performed) ☑
13. Vehicle is properly placarded (Exclusive Use LSA, Yellow III and HRCQ only) ☑
14. Shoring, strapping, blocking and bracing is adequate to prevent shifting of lading ☑

MHF-LS Qualified Technician Signature [signature]
Shipment Date 5.11.05

Attachment 5.9
LOADING DIAGRAM

A qualified MHF-LS shipper shall complete the following diagram by writing the package number and corresponding weight at the approximate position in which it is placed. The space to the left of the diagram may be used for additional or explanatory information as necessary.

Shipment Number- 0840-01-977

Front

9147
22,490-lbs

9155
17,600-lbs

Rear

MHF-LS Qualified Technician
Signature_____
Shipment Date_____

Attachment 5.9
LOADING DIAGRAM

A qualified MHF-LS shipper shall complete the following diagram by writing the package number and corresponding weight at the approximate position in which it is placed. The space to the left of the diagram may be used for additional or explanatory information as necessary.

Shipment Number- 0840-01-977

Front

9214
15,570-lbs

9134
9,000-lbs

Rear

MHF-LS Qualified Technician
Signature_____
Shipment Date_____

Attachment 5.9
LOADING DIAGRAM

A qualified MHF-LS shipper shall complete the following diagram by writing the package number and corresponding weight at the approximate position in which it is placed. The space to the left of the diagram may be used for additional or explanatory information as necessary.

Shipment Number- 0840-01-977

Front

9133
19580-lbs

9209
14420-lbs

Rear

MHF-LS Qualified Technician
Signature_____
Shipment Date_____

Attachment 5.9
LOADING DIAGRAM

A qualified MHF-LS shipper shall complete the following diagram by writing the package number and corresponding weight at the approximate position in which it is placed. The space to the left of the diagram may be used for additional or explanatory information as necessary.

Shipment Number- 0840-01-977

Front

9148

21230-lbs

Rear

MHF-LS Qualified Technician
Signature_____
Shipment Date_____

Attachment 5.15
RAILCAR INSPECTION FORM

Shipment Number	Carrier	Railcar Number
0840-01-977	New York + Atlantic / LIRR	CEFX 31070

Item	SAT	UNSAT	Criteria	Comments
Coupler	☑	☐	Hardware intact, no cracks or broken welds, latching mechanism works properly, no loose or damaged parts	
Suspension	☑	☐	Hardware intact, no visible cracks or broken welds, coil springs seated and intact, inner and outer bearings intact and seated properly	
Wheel & Axle Assembly	☑	☐	Overall condition, no cracks or damaged areas on wheel surfaces, hubs centered, bolting intact, rims not bent or cracked	
Frame & Undercarriage	☑	☐	Main beams straight and centered, no major bends or damage, welds intact, no cracks	
Floors & Walls (Gondola, Boxcar)	☑	☐	No damage with open holes, punch throughs, ect. No rust damage, seams and welds intact, no rotting or other material problems, structurally sound	
Attachment Points or Tie Downs	☑	☐	Tie down hardware straight and intact, no cracks on or around attachment hardware, mechanical clips or latches operable and complete	
Doors (Boxcar Only)	☑	☐	Can be closed and secured properly, lubricated properly, rollers and tracks in operable condition, no loose or missing hardware, sealing surfaces intact and seals in serviceable condition	
Seals and Gasket	☑	☐	Seal Flanges intact with no dents or bends that affect sealing capability, gaskets pliable and in serviceable condition, no torn or missing areas, gasket appropriate to meet sealing requirements	
Seams (Gondola, Boxcar)	☑	☐	Seams intact, welds visibly sufficient, all corners and mating interfaces caulked and sealed properly	
Drains	☑	☐	Drains plugged or sealed properly, verify threaded plugs are tack welded or otherwise disabled, all other holes closed and sealed	
Brakes	☑	☐	Visibly inspect brake shoes, minimum 1" contact surface on all shoes, hoses and piping (tubing) mechanically sound, no missing or loose hardware, valves operate freely, no kinks or obstructions in piping or hoses	
Paint and Lettering	☑	☐	Overall good condition of exterior surfaces, identification numbering legible and intact, areas for placards or labels intact and structurally sound (Wood or metal panels)	
Bracing	☑	☐	Bracing and shoring must be sufficient to prevent shifting of lading during conditions normally incident to transportation	

MHF-LS Qualified Technician Signature _____

Shipment Date 5-11-05

Straight Bill of Lading

Shipper MHF-LS For GTE Operations Support Incorporated
140 Contiague Rock Road
Hicksville, NY 11369

Date: 5/11/2005

Consigned to MHF-LS @ New York-Atlantic Rail Spur
Hicksville, NY 11369

Load in Gondola # CEFX 31070

Emergency Contact: CHEMTREC 800-424-9300

TR: TL:

Total All Trucks 119890

Quantity	Description		Net Waste Weight
2	Soil, DOT Non-Regulated Waste, Containing		
	Radioactive Materials.		
	Package ID Number		**Pounds:**
	Liner	9147	22490
	Liner	9155	17600
			Total:
			40090
	Packages do not meet the DOT "radioactive material"		
	definition in 49 CFR 173.403.		
	Radionuclide: Ac-227,Th-227,~~U238,~~ Th232, Th230,Pa-231,Ra-223		
	Ra-226,Ra-228,Th-228,U-234,U-nat,		
	Total Activity: 3.58046 MBq		
	Physical Form: Solid		
	Chemical Form: Metal Oxide		

GENERATOR CERTIFICATION I hereby certify and declare that the contents of this consignment are fully and accurately described above by proper shipping name and are classified, packed, marked, and labeled, and are in all respects in proper condition for transport by highway according to applicable international and national government regulations.

Printed/Typed Name	Signature		Date
Rob Miller for MHFLS at GTEOSI			5/11/2005
Transporter	**Signature**		**Date**
Priority Transport			5/11/2005

Straight Bill of Lading

Shipper	MHF-LS For GTE Operations Support Incorporated 140 Contiague Rock Road Hicksville, NY 11369	Date: 5/11/2005
Consigned to	MHF-LS @ New York-Atlantic Rail Spur Hicksville, NY 11369	Load in Gondola # CEFX 31070
Emergency Contact:	CHEMTREC 800-424-9300	

TR: TL:

Quantity	Description		Net Waste Weight
2	Soil, DOT Non-Regulated Waste, Containing		
	Radioactive Materials.		
	Package ID Number		**Pounds:**
	Liner	9214	15570
	Liner	9134	9000
			Total:
			24570
	Packages do not meet the DOT "radioactive material"		
	definition in 49 CFR 173.403.		
	10/5/2/05		
	Radionuclide: Ac-227,Th-227,~~U238,~~ Th232, Th230,Pa-231,Ra-223		
	Ra-226,Ra-228,Th-228,U-234,U-nat,		
	Total Activity: 3.818 MBq		
	Physical Form: Solid		
	Chemical Form: Metal Oxide		

GENERATOR CERTIFICATION: I hereby certify and declare that the contents of this consignment are fully and accurately described above by proper shipping name and are classified, packed, marked, and labeled, and are in all respects in proper condition for transport by highway according to applicable international and national government regulations.

Printed/Typed Name	Signature		Date
Rob Miller for MHFLS at GTEOSI			5/11/2005
Transporter	Signature		Date
Priority Transport			5/11/2005

Straight Bill of Lading

Shipper	MHF-LS For GTE Operations Support Incorporated 140 Contiague Rock Road Hicksville, NY 11369	Date: 5/11/2005
Consigned to	MHF-LS @ New York-Atlantic Rail Spur Hicksville, NY 11369	Load in Gondola # CEFX 31070
Emergency Contact:	CHEMTREC 800-424-9300	

TR:

Quantity	Description		Net Waste Weight
2	Soil, DOT Non-Regulated Waste, Containing		
	Radioactive Materials.		
	Package ID Number		**Pounds:**
	Liner	9133	19580
	Liner	9209	14420
			Total:
			34000
	Packages do not meet the DOT "radioactive material"		
	definition in 49 CFR 173.403.		
	5/12/05		
	Radionuclide: Ac-227,Th-227,~~U238,~~ Th232, Th230,Pa-231,Ra-223		
	Ra-226,Ra-228,Th-228,U-234,U-nat,		
	Total Activity: 4.083 MBq		
	Physical Form: Solid		
	Chemical Form: Metal Oxide		

GENERATOR CERTIFICATION: I hereby certify and declare that the contents of this consignment are fully and accurately described above by proper shipping name and are classified, packed, marked, and labeled, and are in all respects in proper condition for transport by highway according to applicable international and national government regulations.

Printed/Typed Name	Signature		Date
Rob Miller for MHFLS at GTEOSI			5/11/2005
Transporter	Signature		Date
Priority Transport			5/11/2005

Straight Bill of Lading

Shipper	MHF-LS For GTE Operations Support Incorporated 140 Contiague Rock Road Hicksville, NY 11369	Date: 5/11/2005
Consigned to	MHF-LS @ New York-Atlantic Rail Spur Hicksville, NY 11369	Load in Gondola # cefx
Emergency Contact:	CHEMTREC 800-424-9300	31070

TR: TL:

Quantity	Description		Net Waste Weight
2	Soil, DOT Non-Regulated Waste, Containing		
	Radioactive Materials.		
	Package ID Number		**Pounds:**
	Liner	9148	21230
	Liner		
			Total:
			21230
	Packages do not meet the DOT "radioactive material"		
	definition in 49 CFR 173.403.		
	Radionuclide: Ac-227,Th-227,~~U238~~, Th232, Th230,Pa-231,Ra-223		
	Ra-226,Ra-228,Th-228,U-234,U-nat,		
	Total Activity: 3.1835 MBq		
	Physical Form: Solid		
	Chemical Form: Metal Oxide		

GENERATOR CERTIFICATION: I hereby certify and declare that the contents of this consignment are fully and accurately described above by proper shipping name and are classified, packed, marked, and labeled, and are in all respects in proper condition for transport by highway according to applicable international and national government regulations.

Printed/Typed Name	Signature		Date
Rob Miller for MHFLS at GTEOSI			5/11/2005
Transporter	Signature		Date
Priority Transport			5/11/2005

CEFX	Shipment #		0										
on-site	new	Bag #		9147	9155	9214	9134	9133	9209	9148			
	Storage Loc.			22490	17600	15570	9000	19580	14420	21230			
31070	0840-01-977		201600										

container #
9209

shipping check sheet (For Form 540)

	Ac-227		corrected	activity mBq	activity mCi	activity Ci	SNM	source	
		4.189E-002	4.189E-002	1.0091E-02	2.7272E-04	2.7272E-07	grams	kg	
grams			pCi/g				3.7878E-09	3.7878E-12	
6510360		7.2000E+01							
	Pa-231			activity mBq	activity mCi	activity Ci	SNM	source	
14340		2.231E-001	2.231E-001	5.3741E-02	1.4525E-03	1.4525E-06	grams	kg	
grams							3.0903E-05	3.0903E-08	
6510360		4.7000E-02							
	Ra-223			activity mBq	activity mCi	activity Ci	SNM	source	
14340		8.025E-002	8.025E-002	1.9331E-02	5.2246E-04	5.2246E-07	grams	kg	
grams							1.0244E-11	1.0244E-14	
6510360		5.1000E+04							
	Ra-226			activity mBq	activity mCi	activity Ci	SNM	source	
14340		2.466E-001	1.7903E-01	4.3126E-02	1.1656E-03	1.1656E-06	grams	kg	1.37741
grams							1.1656E-06	1.1656E-09	
6510360		1.0000E+00							
	Ra228			activity mBq	activity mCi	activity Ci	SNM	source	
14340		4.217E-001	5.9816E-01	1.4409E-01	3.8942E-03	3.8942E-06	grams	kg	0.705
grams							1.4423E-08	1.4423E-11	
6510360		2.7000E+02							
	TH-227			activity mBq	activity mCi	activity Ci	SNM	source	
14340		4.189E-002	4.189E-002	1.0091E-02	2.7272E-04	2.7272E-07	grams	kg	
grams							8.7974E-12	8.7974E-15	
6510360		3.1000E+04							
	Th-228			activity mBq	activity mCi	activity Ci	SNM	source	
14340		3.345E-001	6.0411E-01	1.4552E-01	3.9330E-03	3.9330E-06	grams	kg	
grams							4.7963E-09	4.7963E-12	0.55371
6510360		8.2000E+02							
	Th-230			activity mBq	activity mCi	activity Ci	SNM	source	
14340		4.217E-001	3.1290E-01	7.5373E-02	2.0371E-03	2.0371E-06	grams	kg	
grams							9.7005E-05	9.7005E-08	1.34771
6510360		2.1000E-02							
	TH-232			activity mBq	activity mCi	activity Ci	SNM	source	
14340		4.217E-001	5.9816E-01	1.4409E-01	3.8942E-03	3.8942E-06	grams	kg	0.705
grams							3.5402E+01	3.5402E-02	
6510360		1.1000E-07							
	U-234			activity mBq	activity mCi	activity Ci	SNM	source	
14340		1.063E+000	9.4394E-01	2.2738E-01	6.1454E-03	6.1454E-06	grams	kg	1.12613
grams							9.9119E-04	9.9119E-07	
6510360		6.2000E-03							
	U-235			activity mBq	activity mCi	activity Ci	SNM	source	
14340		1.287E-001	1.6479E-01	3.9695E-02	1.0728E-03	1.0728E-06	grams	kg	0.781
grams							4.8765E-01	4.8765E-04	
6510360		2.2000E-06							
	U-238			activity mBq	activity mCi	activity Ci	SNM	source	
14340		1.063E+000	1.4345E+00	3.4556E-01	9.3394E-03	9.3394E-06	grams	kg	0.741
grams							2.7469E+01	2.7469E-02	
6510360		3.4000E-07							

Totals for all flag 1 data

			corrected	activity mBq	activity mCi	activity Ci	SNM	source	
14340		4.4880E+00	5.1809E+00	1.2581E+00	3.4002E-02	3.4002E-05	grams	kg	flag1 data
			pCi/g	541 will be < than the 540 (MDA not added)			4.8765E-01	6.2872E-02	
113.8095238				data for NORM					
	U-nat		corrected pCi/g	activity mBq	activity mCi	activity Ci		source	
		1.1917E+00	1.5993E+00	3.8525E-01	1.0412E-02	1.0412E-05		kg	
								1.4665E-02	
		7.1000E-07							

U-nat		corrected pCi/g	activity mBq	activity mCi	activity Ci		source
	4.4880E+00	5.1809E+00	1.2581E+00	3.4002E-02	3.4002E-05		kg total
							5.0068E-02

norm data

X

container #
9155

shipping check sheet (For Form 540)

	Ac-227		corrected	activity mBq	activity mCi	activity Ci	SNM	source	
		4.012E-002	4.012E-002	1.1807E-02	3.1912E-04	3.1912E-07	grams	kg	
grams			pCi/g				4.4322E-09	4.4322E-12	
7954080		7.2000E+01							
	Pa-231			activity mBq	activity mCi	activity Ci	SNM	source	
17520		1.763E-001	1.763E-001	5.1885E-02	1.4023E-03	1.4023E-06	grams	kg	
grams							2.9836E-05	2.9836E-08	
7954080		4.7000E-02							
	Ra-223			activity mBq	activity mCi	activity Ci	SNM	source	
17520		3.818E-002	3.818E-002	1.1236E-02	3.0369E-04	3.0369E-07	grams	kg	
grams							5.9546E-12	5.9546E-15	
7954080		5.1000E+04							
	Ra-226			activity mBq	activity mCi	activity Ci	SNM	source	
17520		1.699E-001	1.2335E-01	3.6301E-02	9.8112E-04	9.8112E-07	grams	kg	1.37741
grams							9.8112E-07	9.8112E-10	
7954080		1.0000E+00							
	Ra228			activity mBq	activity mCi	activity Ci	SNM	source	
17520		2.569E-001	3.6440E-01	1.0724E-01	2.8984E-03	2.8984E-06	grams	kg	0.705
grams							1.0735E-08	1.0735E-11	
7954080		2.7000E+02							
	TH-227			activity mBq	activity mCi	activity Ci	SNM	source	
17520		4.012E-002	4.012E-002	1.1807E-02	3.1912E-04	3.1912E-07	grams	kg	
grams							1.0294E-11	1.0294E-14	
7954080		3.1000E+04							
	Th-228			activity mBq	activity mCi	activity Ci	SNM	source	
17520		2.182E-001	3.9407E-01	1.1597E-01	3.1345E-03	3.1345E-06	grams	kg	
grams							3.8225E-09	3.8225E-12	0.55371
7954080		8.2000E+02							
	Th-230			activity mBq	activity mCi	activity Ci	SNM	source	
17520		2.569E-001	1.9062E-01	5.6100E-02	1.5162E-03	1.5162E-06	grams	kg	
grams							7.2200E-05	7.2200E-08	1.34771
7954080		2.1000E-02							
	TH-232			activity mBq	activity mCi	activity Ci	SNM	source	
17520		2.569E-001	3.6440E-01	1.0724E-01	2.8984E-03	2.8984E-06	grams	kg	0.705
grams							2.6349E+01	2.6349E-02	
7954080		1.1000E-07							
	U-234			activity mBq	activity mCi	activity Ci	SNM	source	
17520		2.954E-001	2.6231E-01	7.7199E-02	2.0865E-03	2.0865E-06	grams	kg	1.12613
grams							3.3653E-04	3.3653E-07	
7954080		6.2000E-03							
	U-235			activity mBq	activity mCi	activity Ci	SNM	source	
17520		1.450E-001	1.8566E-01	5.4640E-02	1.4767E-03	1.4767E-06	grams	kg	0.781
grams							6.7125E-01	6.7125E-04	
7954080		2.2000E-06							
	U-238			activity mBq	activity mCi	activity Ci	SNM	source	
17520		2.954E-001	3.9865E-01	1.1732E-01	3.1709E-03	3.1709E-06	grams	kg	0.741
grams							9.3262E+00	9.3262E-03	
7954080		3.4000E-07							

Totals for all flag 1 data

			corrected	activity mBq	activity mCi	activity Ci	SNM	source	
17520		2.1893E+00	2.5381E+00	7.5876E-01	2.0507E-02	2.0507E-05	grams	kg	flag1 data
			pCi/g	541 will be < than the 540 (MDA not added)			6.7125E-01	3.5676E-02	
139.047619				data for NORM					
	U-nat		corrected pCi/g	activity mBq	activity mCi	activity Ci		source	
		4.4040E-01	5.8431E-01	1.7196E-01	4.6476E-03	4.6476E-06		kg	
								6.5460E-03	
		7.1000E-07							

U-nat		corrected pCi/g	activity mBq	activity mCi	activity Ci		source	
	2.1893E+00	2.5381E+00	7.5876E-01	2.0507E-02	2.0507E-05		kg total	norm data
							3.2896E-02	

X

container #
9214

shipping check sheet (For Form 540)

	Ac-227		corrected	activity mBq	activity mCi	activity Ci	SNM	source	
		7.644E-002	7.644E-002	1.9890E-02	5.3756E-04	5.3756E-07	grams	kg	
grams			pCi/g				7.4661E-09	7.4661E-12	
7032460		7.2000E+01							
	Pa-231			activity mBq	activity mCi	activity Ci	SNM	source	
15490		3.671E-001	3.671E-001	9.5520E-02	2.5816E-03	2.5816E-06	grams	kg	
grams							5.4928E-05	5.4928E-08	
7032460		4.7000E-02							
	Ra-223			activity mBq	activity mCi	activity Ci	SNM	source	
15490		5.215E-002	5.215E-002	1.3569E-02	3.6674E-04	3.6674E-07	grams	kg	
grams							7.1910E-12	7.1910E-15	
7032460		5.1000E+04							
	Ra-226			activity mBq	activity mCi	activity Ci	SNM	source	
15490		2.621E-001	1.9028E-01	4.9512E-02	1.3382E-03	1.3382E-06	grams	kg	1.37741
grams							1.3382E-06	1.3382E-09	
7032460		1.0000E+00							
	Ra228			activity mBq	activity mCi	activity Ci	SNM	source	
15490		3.626E-001	5.1433E-01	1.3383E-01	3.6170E-03	3.6170E-06	grams	kg	0.705
grams							1.3396E-08	1.3396E-11	
7032460		2.7000E+02							
	Th-227			activity mBq	activity mCi	activity Ci	SNM	source	
15490		7.644E-002	7.644E-002	1.9890E-02	5.3756E-04	5.3756E-07	grams	kg	
grams							1.7341E-11	1.7341E-14	
7032460		3.1000E+04							
	Th-228			activity mBq	activity mCi	activity Ci	SNM	source	
15490		3.829E-001	6.9152E-01	1.7993E-01	4.8631E-03	4.8631E-06	grams	kg	
grams							5.9306E-09	5.9306E-12	0.55371
7032460		8.2000E+02							
	Th-230			activity mBq	activity mCi	activity Ci	SNM	source	
15490		3.626E-001	2.6905E-01	7.0007E-02	1.8921E-03	1.8921E-06	grams	kg	
grams							9.0099E-05	9.0099E-08	1.34771
7032460		2.1000E-02							
	TH-232			activity mBq	activity mCi	activity Ci	SNM	source	
15490		3.626E-001	5.1433E-01	1.3383E-01	3.6170E-03	3.6170E-06	grams	kg	0.705
grams							3.2882E+01	3.2882E-02	
7032460		1.1000E-07							
	U-234			activity mBq	activity mCi	activity Ci	SNM	source	
15490		1.722E+000	1.5291E+00	3.9788E-01	1.0754E-02	1.0754E-05	grams	kg	1.12613
grams							1.7344E-03	1.7344E-06	
7032460		6.2000E-03							
	U-235			activity mBq	activity mCi	activity Ci	SNM	source	
15490		1.950E-001	2.4968E-01	6.4967E-02	1.7559E-03	1.7559E-06	grams	kg	0.781
grams							7.9812E-01	7.9812E-04	
7032460		2.2000E-06							
	U-238			activity mBq	activity mCi	activity Ci	SNM	source	
15490		1.722E+000	2.3239E+00	6.0468E-01	1.6343E-02	1.6343E-05	grams	kg	0.741
grams							4.8067E+01	4.8067E-02	
7032460		3.4000E-07							

Totals for all flag 1 data

			corrected	activity mBq	activity mCi	activity Ci	SNM	source	
15490		5.9439E+00	6.7779E+00	1.7835E+00	4.8203E-02	4.8203E-05	grams	kg	flag1 data
			pCi/g	541 will be < than the 540 (MDA not added)			7.9812E-01	8.0950E-02	
122.9365079				data for NORM					
	U-nat		corrected pCi/g	activity mBq	activity mCi	activity Ci		source	
		1.9170E+00	2.5736E+00	6.6964E-01	1.8099E-02	1.8099E-05		kg	
								2.5491E-02	
		7.1000E-07							

U-nat		corrected pCi/g	activity mBq	activity mCi	activity Ci		source
	5.9439E+00	6.7779E+00	1.7835E+00	4.8203E-02	4.8203E-05		kg total
							5.8374E-02

norm data

X

container #
9133

shipping check sheet (For Form 540)

	Ac-227		corrected	activity mBq	activity mCi	activity Ci	SNM	source	
		6.239E-002	6.239E-002	2.0437E-02	5.5234E-04	5.5234E-07	grams	kg	
grams			pCi/g				7.6714E-09	7.6714E-12	
8853000		7.2000E+01							
	Pa-231			activity mBq	activity mCi	activity Ci	SNM	source	
19500		1.940E-001	1.940E-001	6.3547E-02	1.7175E-03	1.7175E-06	grams	kg	
grams							3.6542E-05	3.6542E-08	
8853000		4.7000E-02							
	Ra-223			activity mBq	activity mCi	activity Ci	SNM	source	
19500		2.456E-002	2.456E-002	8.0449E-03	2.1743E-04	2.1743E-07	grams	kg	
grams							4.2633E-12	4.2633E-15	
8853000		5.1000E+04							
	Ra-226			activity mBq	activity mCi	activity Ci	SNM	source	
19500		2.071E-001	1.5035E-01	4.9250E-02	1.3311E-03	1.3311E-06	grams	kg	1.37741
grams							1.3311E-06	1.3311E-09	
8853000		1.0000E+00							
	Ra228			activity mBq	activity mCi	activity Ci	SNM	source	
19500		2.750E-001	3.9007E-01	1.2777E-01	3.4533E-03	3.4533E-06	grams	kg	0.705
grams							1.2790E-08	1.2790E-11	
8853000		2.7000E+02							
	TH-227			activity mBq	activity mCi	activity Ci	SNM	source	
19500		6.239E-002	6.239E-002	2.0437E-02	5.5234E-04	5.5234E-07	grams	kg	
grams							1.7817E-11	1.7817E-14	
8853000		3.1000E+04							
	Th-228			activity mBq	activity mCi	activity Ci	SNM	source	
19500		3.047E-001	5.5029E-01	1.8025E-01	4.8717E-03	4.8717E-06	grams	kg	
grams							5.9411E-09	5.9411E-12	0.55371
8853000		8.2000E+02							
	Th-230			activity mBq	activity mCi	activity Ci	SNM	source	
19500		2.750E-001	2.0405E-01	6.6839E-02	1.8065E-03	1.8065E-06	grams	kg	
grams							8.6022E-05	8.6022E-08	1.34771
8853000		2.1000E-02							
	TH-232			activity mBq	activity mCi	activity Ci	SNM	source	
19500		2.750E-001	3.9007E-01	1.2777E-01	3.4533E-03	3.4533E-06	grams	kg	0.705
grams							3.1394E+01	3.1394E-02	
8853000		1.1000E-07							
	U-234			activity mBq	activity mCi	activity Ci	SNM	source	
19500		2.831E+000	2.5139E+00	8.2346E-01	2.2256E-02	2.2256E-05	grams	kg	1.12613
grams							3.5896E-03	3.5896E-06	
8853000		6.2000E-03							
	U-235			activity mBq	activity mCi	activity Ci	SNM	source	
19500		2.041E-001	2.6133E-01	8.5602E-02	2.3136E-03	2.3136E-06	grams	kg	0.781
grams							1.0516E+00	1.0516E-03	
8853000		2.2000E-06							
	U-238			activity mBq	activity mCi	activity Ci	SNM	source	
19500		2.831E+000	3.8205E+00	1.2515E+00	3.3823E-02	3.3823E-05	grams	kg	0.741
grams							9.9479E+01	9.9479E-02	
8853000		3.4000E-07							

Totals for all flag 1 data

			corrected	activity mBq	activity mCi	activity Ci	SNM	source	
19500		7.5462E+00	8.5615E+00	2.8249E+00	7.6348E-02	7.6348E-05	grams	kg	flag1 data
			pCi/g	541 will be < than the 540 (MDA not added)			1.0516E+00	1.3088E-01	
154.7619048				data for NORM					
	U-nat		corrected pCi/g	activity mBq	activity mCi	activity Ci		source	
		3.0351E+00	4.0818E+00	1.3371E+00	3.6137E-02	3.6137E-05		kg	
								5.0897E-02	
		7.1000E-07							

U-nat		corrected pCi/g	activity mBq	activity mCi	activity Ci		source
	7.5462E+00	8.5615E+00	2.8249E+00	7.6348E-02	7.6348E-05		kg total
							8.2294E-02

norm data

X

container #
9134

shipping check sheet (For Form 540)

	Ac-227		corrected	activity mBq	activity mCi	activity Ci	SNM	source	
		6.556E-002	6.556E-002	9.8234E-03	2.6550E-04	2.6550E-07	grams	kg	
grams			pCi/g				3.6875E-09	3.6875E-12	
4049680		7.2000E+01							
	Pa-231			activity mBq	activity mCi	activity Ci	SNM	source	
8920		1.413E-001	1.413E-001	2.1172E-02	5.7222E-04	5.7222E-07	grams	kg	
grams							1.2175E-05	1.2175E-08	
4049680		4.7000E-02							
	Ra-223			activity mBq	activity mCi	activity Ci	SNM	source	
8920		7.613E-002	7.613E-002	1.1407E-02	3.0830E-04	3.0830E-07	grams	kg	
grams							6.0451E-12	6.0451E-15	
4049680		5.1000E+04							
	Ra-226			activity mBq	activity mCi	activity Ci	SNM	source	
8920		2.794E-001	2.0284E-01	3.0394E-02	8.2146E-04	8.2146E-07	grams	kg	1.37741
grams							8.2146E-07	8.2146E-10	
4049680		1.0000E+00							
	Ra228			activity mBq	activity mCi	activity Ci	SNM	source	
8920		3.089E-001	4.3816E-01	6.5652E-02	1.7744E-03	1.7744E-06	grams	kg	0.705
grams							6.5718E-09	6.5718E-12	
4049680		2.7000E+02							
	TH-227			activity mBq	activity mCi	activity Ci	SNM	source	
8920		6.556E-002	6.556E-002	9.8234E-03	2.6550E-04	2.6550E-07	grams	kg	
grams							8.5644E-12	8.5644E-15	
4049680		3.1000E+04							
	Th-228			activity mBq	activity mCi	activity Ci	SNM	source	
8920		4.072E-001	7.3540E-01	1.1019E-01	2.9781E-03	2.9781E-06	grams	kg	
grams							3.6319E-09	3.6319E-12	0.55371
4049680		8.2000E+02							
	Th-230			activity mBq	activity mCi	activity Ci	SNM	source	
8920		3.089E-001	2.2920E-01	3.4343E-02	9.2820E-04	9.2820E-07	grams	kg	
grams							4.4200E-05	4.4200E-08	1.34771
4049680		2.1000E-02							
	TH-232			activity mBq	activity mCi	activity Ci	SNM	source	
8920		3.089E-001	4.3816E-01	6.5652E-02	1.7744E-03	1.7744E-06	grams	kg	0.705
grams							1.6131E+01	1.6131E-02	
4049680		1.1000E-07							
	U-234			activity mBq	activity mCi	activity Ci	SNM	source	
8920		4.825E+000	4.2846E+00	6.4199E-01	1.7351E-02	1.7351E-05	grams	kg	1.12613
grams							2.7986E-03	2.7986E-06	
4049680		6.2000E-03							
	U-235			activity mBq	activity mCi	activity Ci	SNM	source	
8920		3.041E-001	3.8937E-01	5.8343E-02	1.5768E-03	1.5768E-06	grams	kg	0.781
grams							7.1674E-01	7.1674E-04	
4049680		2.2000E-06							
	U-238			activity mBq	activity mCi	activity Ci	SNM	source	
8920		4.825E+000	6.5115E+00	9.7567E-01	2.6369E-02	2.6369E-05	grams	kg	0.741
grams							7.7557E+01	7.7557E-02	
4049680		3.4000E-07							

Totals for all flag 1 data

			corrected	activity mBq	activity mCi	activity Ci	SNM	source	
8920		1.1916E+01	1.3512E+01	2.0345E+00	5.4986E-02	5.4986E-05	grams	kg	flag1 data
			pCi/g	541 will be < than the 540 (MDA not added)			7.1674E-01	9.3691E-02	
70.79365079				data for NORM					
	U-nat		corrected pCi/g	activity mBq	activity mCi	activity Ci		source	
		5.1291E+00	6.9008E+00	1.0340E+00	2.7946E-02	2.7946E-05		kg	
								3.9361E-02	
		7.1000E-07							

U-nat		corrected pCi/g	activity mBq	activity mCi	activity Ci		source	
	1.1916E+01	1.3512E+01	2.0345E+00	5.4986E-02	5.4986E-05		kg total	norm data
							5.5495E-02	

X

container #
9148

shipping check sheet (For Form 540)

	Ac-227		corrected	activity mBq	activity mCi	activity Ci	SNM	source	
		1.085E-001	1.085E-001	3.8548E-02	1.0418E-03	1.0418E-06	grams	kg	
grams			pCi/g				1.4470E-08	1.4470E-11	
9602100		7.2000E+01							
	Pa-231			activity mBq	activity mCi	activity Ci	SNM	source	
21150		4.908E-001	4.908E-001	1.7437E-01	4.7127E-03	4.7127E-06	grams	kg	
grams							1.0027E-04	1.0027E-07	
9602100		4.7000E-02							
	Ra-223			activity mBq	activity mCi	activity Ci	SNM	source	
21150		7.794E-002	7.794E-002	2.7690E-02	7.4839E-04	7.4839E-07	grams	kg	
grams							1.4674E-11	1.4674E-14	
9602100		5.1000E+04							
	Ra-228			activity mBq	activity mCi	activity Ci	SNM	source	
21150		5.269E-001	3.8253E-01	1.3590E-01	3.6731E-03	3.6731E-06	grams	kg	1.37741
grams							3.6731E-06	3.6731E-09	
9602100		1.0000E+00							
	Ra228			activity mBq	activity mCi	activity Ci	SNM	source	
21150		6.580E-001	9.3333E-01	3.3159E-01	8.9620E-03	8.9620E-06	grams	kg	0.705
grams							3.3192E-08	3.3192E-11	
9602100		2.7000E+02							
	Th-227			activity mBq	activity mCi	activity Ci	SNM	source	
21150		1.085E-001	1.085E-001	3.8548E-02	1.0418E-03	1.0418E-06	grams	kg	
grams							3.3607E-11	3.3607E-14	
9602100		3.1000E+04							
	Th-228			activity mBq	activity mCi	activity Ci	SNM	source	
21150		7.118E-001	1.2855E+00	4.5671E-01	1.2344E-02	1.2344E-05	grams	kg	
grams							1.5053E-08	1.5053E-11	0.55371
9602100		8.2000E+02							
	Th-230			activity mBq	activity mCi	activity Ci	SNM	source	
21150		6.580E-001	4.8824E-01	1.7348E-01	4.6881E-03	4.6881E-06	grams	kg	
grams							2.2324E-04	2.2324E-07	1.34771
9602100		2.1000E-02							
	Th-232			activity mBq	activity mCi	activity Ci	SNM	source	
21150		6.580E-001	9.3333E-01	3.3159E-01	8.9620E-03	8.9620E-06	grams	kg	0.705
grams							8.1472E+01	8.1472E-02	
9602100		1.1000E-07							
	U-234			activity mBq	activity mCi	activity Ci	SNM	source	
21150		1.638E+000	1.4545E+00	5.1677E-01	1.3967E-02	1.3967E-05	grams	kg	1.12613
grams							2.2527E-03	2.2527E-06	
9602100		6.2000E-03							
	U-235			activity mBq	activity mCi	activity Ci	SNM	source	
21150		3.803E-001	4.8694E-01	1.7300E-01	4.6756E-03	4.6756E-06	grams	kg	0.781
grams							2.1253E+00	2.1253E-03	
9602100		2.2000E-06							
	U-238			activity mBq	activity mCi	activity Ci	SNM	source	
21150		1.638E+000	2.2105E+00	7.8535E-01	2.1226E-02	2.1226E-05	grams	kg	0.741
grams							6.2429E+01	6.2429E-02	
9602100		3.4000E-07							

Totals for all flag 1 data

			corrected	activity mBq	activity mCi	activity Ci	SNM	source	
21150		7.6547E+00	8.8522E+00	3.1835E+00	8.6041E-02	8.6041E-05	grams	kg	flag1 data
			pCi/g	541 will be < than the 540 (MDA not added)			2.1253E+00	1.4390E-01	
167.8571429				data for NORM					
	U-nat		corrected pCi/g	activity mBq	activity mCi	activity Ci		source	
		2.0183E+00	2.6975E+00	9.5835E-01	2.5901E-02	2.5901E-05		kg	
								3.6481E-02	
		7.1000E-07							

U-nat		corrected pCi/g	activity mBq	activity mCi	activity Ci		source	
	7.6547E+00	8.8522E+00	3.1835E+00	8.6041E-02	8.6041E-05		kg total	norm data
							1.1796E-01	

container #
9147

shipping check sheet (For Form 540)

	Ac-227		corrected	activity mBq	activity mCi	activity Ci	SNM	source	
		8.895E-002	6.895E-002	3.3485E-02	9.0499E-04	9.0499E-07	grams	kg	
grams			pCi/g				1.2569E-08	1.2569E-11	
10174140		7.2000E+01							
	Pa-231			activity mBq	activity mCi	activity Ci	SNM	source	
22410		2.700E-001	2.700E-001	1.0164E-01	2.7470E-03	2.7470E-06	grams	kg	
grams							5.8447E-05	5.8447E-08	
10174140		4.7000E-02							
	Ra-223			activity mBq	activity mCi	activity Ci	SNM	source	
22410		5.827E-002	5.827E-002	2.1935E-02	5.9285E-04	5.9285E-07	grams	kg	
grams							1.1624E-11	1.1624E-14	
10174140		5.1000E+04							
	Ra-226			activity mBq	activity mCi	activity Ci	SNM	source	
22410		3.278E-001	2.3798E-01	8.9587E-02	2.4213E-03	2.4213E-06	grams	kg	1.37741
grams							2.4213E-06	2.4213E-09	
10174140		1.0000E+00							
	Ra228			activity mBq	activity mCi	activity Ci	SNM	source	
22410		5.568E-001	7.8979E-01	2.9731E-01	8.0354E-03	8.0354E-06	grams	kg	0.705
grams							2.9761E-08	2.9761E-11	
10174140		2.7000E+02							
	Th-227			activity mBq	activity mCi	activity Ci	SNM	source	
22410		8.895E-002	8.895E-002	3.3485E-02	9.0499E-04	9.0499E-07	grams	kg	
grams							2.9193E-11	2.9193E-14	
10174140		3.1000E+04							
	Th-228			activity mBq	activity mCi	activity Ci	SNM	source	
22410		4.323E-001	7.8073E-01	2.9390E-01	7.9433E-03	7.9433E-06	grams	kg	
grams							9.6869E-09	9.6869E-12	0.55371
10174140		8.2000E+02							
	Th-230			activity mBq	activity mCi	activity Ci	SNM	source	
22410		5.568E-001	4.1315E-01	1.5553E-01	4.2034E-03	4.2034E-06	grams	kg	
grams							2.0016E-04	2.0016E-07	1.34771
10174140		2.1000E-02							
	Th-232			activity mBq	activity mCi	activity Ci	SNM	source	
22410		5.568E-001	7.8979E-01	2.9731E-01	8.0354E-03	8.0354E-06	grams	kg	0.705
grams							7.3049E+01	7.3049E-02	
10174140		1.1000E-07							
	U-234			activity mBq	activity mCi	activity Ci	SNM	source	
22410		1.573E+000	1.3968E+00	5.2582E-01	1.4211E-02	1.4211E-05	grams	kg	1.12613
grams							2.2922E-03	2.2922E-06	
10174140		6.2000E-03							
	U-235			activity mBq	activity mCi	activity Ci	SNM	source	
22410		3.580E-001	4.5839E-01	1.7256E-01	4.6637E-03	4.6637E-06	grams	kg	0.781
grams							2.1199E+00	2.1199E-03	
10174140		2.2000E-06							
	U-238			activity mBq	activity mCi	activity Ci	SNM	source	
22410		1.573E+000	2.1228E+00	7.9912E-01	2.1598E-02	2.1598E-05	grams	kg	0.741
grams							6.3523E+01	6.3523E-02	
10174140		3.4000E-07							

Totals for all flag 1 data

			corrected	activity mBq	activity mCi	activity Ci	SNM	source	
22410		6.4407E+00	7.4067E+00	2.8217E+00	7.6261E-02	7.6261E-05	grams	kg	flag1 data
			pCi/g	541 will be < than the 540 (MDA not added)			2.1199E+00	1.3657E-01	
177.8571429				data for NORM					
	U-nat		corrected pCi/g	activity mBq	activity mCi	activity Ci		source	
		1.9310E+00	2.5812E+00	9.7167E-01	2.6261E-02	2.6261E-05		kg	
								3.6988E-02	
		7.1000E-07							

U-nat		corrected pCi/g	activity mBq	activity mCi	activity Ci		source	
	6.4407E+00	7.4067E+00	2.8217E+00	7.6261E-02	7.6261E-05		kg total	norm data
							1.1004E-01	

X

Posillico Bros. Asphalt Co.

1610 New Highway, Farmingdale, N.Y. 11735
Plant Tele: 293-2620, 2621

HOT STORAGE

15:56 10-07-04 TICKET NUMBER 9148

21230 lb GROSS

Posillico Bros. Asphalt Co.

1610 New Highway, Farmingdale, N.Y. 11735
Plant Tele: 293-2620, 2621

HOT STORAGE

15:49 10-07-04 TICKET NUMBER 9147

22490 lb GROSS

Posillico Bros. Asphalt Co.

1610 New Highway, Farmingdale, N.Y. 11735
Plant Tele: 293-2620, 2621

HOT STORAGE

8:16 10-12-04 TICKET NUMBER 9134

9000 lb GROSS

Posillico Bros. Asphalt Co.

1610 New Highway, Farmingdale, N.Y. 11735
Plant Tele: 293-2620, 2621

HOT STORAGE

13:14 10-20-04 TICKET NUMBER 9133

19580 lb GROSS

FORM 540 — Envirocare of Utah, Inc.

UNIFORM LOW-LEVEL RADIOACTIVE WASTE MANIFEST

SHIPPING PAPER

1. EMERGENCY TELEPHONE NUMBER (Include Area Code): 1-800-424-9300

ORGANIZATION: Chemtrec

2. IS THIS AN "EXCLUSIVE USE" SHIPMENT? ☐ YES ☑ NO

3. TOTAL NUMBER OF PACKAGES IDENTIFIED ON THIS MANIFEST ==> 11

4. DOES EPA REGULATED WASTE REQUIRING A MANIFEST ACCOMPANY THIS SHIPMENT? ☐ YES ☑ NO
If "Yes," provide Manifest Number ==>

EPA MANIFEST NUMBER

5. SHIPPER – NAME AND FACILITY
GTEOSI
140 Cantague Rock RD
Hicksville, NY 11801

Utah Generator Site Access Permit No.: 020 500 1352
SHIPMENT NUMBER: MHFX-5213

CONTACT: Jean Agostinelli

6. CARRIER – Name and Address
Priority Transport Services, Inc.
381 Anthony Street
Schenectady, NY 12308

CONTACT: Dispatch

SIGNATURE – Authorized carrier acknowledging waste receipt

SHIPPER I.D. NUMBER: 0840-01-978
☐ COLLECTOR
☐ PROCESSOR
☑ GENERATOR TYPE (Specify) I

TELEPHONE NUMBER (Include Area Code): 516-832-9157

EPA I.D. NUMBER: NYR000104976

SHIPPING DATE: 05/11/2005

TELEPHONE (Include Area Code): 800-235-0089

DATE: 5-11-05

7. FORM 540 AND 540A — PAGE 1 OF 3 PAGE(S)
FORM 541 AND 541A — 6 PAGE(S)
FORM 542 AND 542A — None PAGE(S)
ADDITIONAL INFORMATION — None PAGE(S)

8. MANIFEST NUMBER (Use this number on all continuation pages): 0840-01-978

9. CONSIGNEE - Name and Facility
Envirocare of Utah, Inc.
Clive Disposal Site (Bulk Waste Facility)
Interstate 80, Exit 49
Clive, UT 84029

CONTACT: Shipping and Receiving
TELEPHONE (Include Area Code): (435)884-0155

SIGNATURE – Authorized consignee acknowledging waste receipt: 184524
DATE: 5-25-05

10. CERTIFICATION
This is to certify that the herein-named materials are properly classified, described, packaged, marked, and labeled and are in proper condition for transportation according to the applicable regulations of the Department of Transportation. This also certifies that the materials are classified, packaged, marked, and labeled and are in proper condition for transportation and disposal as described in accordance with the requirements of 10 CFR Parts 20 and 61, or equivalent state regulations.

AUTHORIZED SIGNATURE | TITLE: Broker | DATE: 5-11-05

11. U.S. DEPARTMENT OF TRANSPORTATION DESCRIPTION (Including proper shipping name, hazard class, UN ID number, and any additional information)	12. DOT LABEL "RADIOACTIVE"	13. TRANSPORT INDEX	14. PHYSICAL AND CHEMICAL FORM	15. INDIVIDUAL RADIONUCLIDES	16. TOTAL PACKAGE ACTIVITY MBq	mCi	17. LSA/SCO CLASS	18. TOTAL WEIGHT OR VOLUME (Use appropriate units)	19. IDENTIFICATION NUMBER OF PACKAGE
Soil,DOT Non-Regulated, containing Radionuclides	NA	NA	Solid / OXIDES	Ac-227 Pa-231 Ra-223 Ra-226 Ra-228 Th-227 Th-228 Th-230 Th-232 U-234 U-Nat	9.3758E-01	2.5340E-02	NA	20440 LBS; 161.59 FT3	9171
Soil,DOT Non-Regulated, containing Radionuclides	NA	NA	Solid / OXIDES	Ac-227 Pa-231 Ra-223 Ra-226 Ra-228 Th-227 Th-228 Th-230 Th-232 U-234 U-Nat	1.6670E+00	4.5053E-02	NA	17380 LBS; 137.3 FT3	9190
Soil,DOT Non-Regulated, containing Radionuclides	NA	NA	Solid / OXIDES	Ac-227 Pa-231 Ra-223 Ra-226 Ra-228 Th-227 Th-228 Th-230 Th-232 U-234 U-Nat	1.0084E+00	2.7254E-02	NA	17730 LBS; 140.08 FT3	9191

FOR CONSIGNEE USE ONLY

- ___ Record Waste Description Inadequate
- ___ Contamination or Leakage Detected
- ___ Unexpected Exposure Rates Detected
- ___ Labels, Markings, etc. Inadequate
- ___ Container Integrity Inadequate
- ✓ Other
- ✓ No Violations Detected on this Shipment

20. TERMS AND CONDITIONS

A. HAZARDOUS MATERIALS: Generator represents & warrants that Waste Material ___ is (or) ✓ is not a hazardous waste as defined in 40 CFR 261. Where the material is a hazardous waste, this shipment is also accompanied by a separate and completed hazardous waste manifest, along with the appropriate land-disposal restriction notice and/or certification as required by 40 CFR 268.1.

B. TITLE: Upon acceptance at the disposal site by Envirocare of Utah, Inc., and all appropriate regulatory authorities, title to the Waste Material which conforms to Generator's representations herein shall thereupon transfer from Generator and be vested in Envirocare of Utah, Inc.

C. WASTE MATERIAL: Generator represents and warrants that all data set forth in this (UNIFORM LOW-LEVEL RADIOACTIVE WASTE MANIFEST) are true and correct in all respects and in accordance with all applicable governmental laws, rules, regulations and Envirocare of Utah Inc.'s facility license.

D. INDEMNIFICATION: Generator agrees to indemnify Envirocare of Utah, Inc., its officers, employees and agents against all losses and liability whatsoever if such losses or liability results from the failure of the Waste Material to conform in all material respects to the data supplied on the (UNIFORM LOW-LEVEL RADIOACTIVE WASTE MANIFEST,) or if this shipment fails to meet the standards prescribed by the Department of Transportation or any governmental agency having jurisdiction over such matters.

FORM 540 (04-03)

FORM 540 — **Envirocare of Utah, Inc.**

UNIFORM LOW-LEVEL RADIOACTIVE WASTE MANIFEST

SHIPPING PAPER

1. EMERGENCY TELEPHONE NUMBER (Include Area Code): 1-800-424-9300

ORGANIZATION: Chemtrec

2. IS THIS AN "EXCLUSIVE USE" SHIPMENT? ☐ YES ☑ NO

3. TOTAL NUMBER OF PACKAGES IDENTIFIED ON THIS MANIFEST =====> 11

4. DOES EPA REGULATED WASTE REQUIRING A MANIFEST ACCOMPANY THIS SHIPMENT? ☐ YES ☑ NO
If "Yes," provide Manifest Number =====>

EPA MANIFEST NUMBER

5. SHIPPER -- NAME AND FACILITY
GTEOSI
140 Cantiague Rock RD
Hicksville, NY 11801

SHIPPER I.D. NUMBER: 0840-01-978
☐ COLLECTOR
☐ PROCESSOR

Utah Generator Site Access Permit No.: 020 500 1352
SHIPMENT NUMBER: MHFX-5213
☑ GENERATOR TYPE (Specify) I

CONTACT: Jean Agostinelli
TELEPHONE NUMBER (Include Area Code): 516-932-9157

6. CARRIER -- Name and Address
Priority Transport Services, Inc.
391 Anthony Street
Schenectady, NY 12308

EPA I.D. NUMBER: NYR000104976
SHIPPING DATE: 05/11/2005

CONTACT: Dispatch
TELEPHONE (Include Area Code): 800-235-0069

SIGNATURE -- *Authorized carrier acknowledging waste receipt*
DATE: 5-11-05

7. FORM 540 AND 540A — PAGE 1 OF 3 PAGE(S)
FORM 541 AND 541A — 6 PAGE(S)
FORM 542 AND 542A — None PAGE(S)
ADDITIONAL INFORMATION — None PAGE(S)

8. MANIFEST NUMBER (Use this number on all continuation pages): 0840-01-978

9. CONSIGNEE - Name and Facility
Envirocare of Utah, Inc.
Clive Disposal Site (Bulk Waste Facility)
Interstate 80, Exit 49
Clive, UT 84029

CONTACT: Shipping and Receiving
TELEPHONE (Include Area Code): (435)884-0155

SIGNATURE -- *Authorized consignee acknowledging waste receipt*
DATE

10. CERTIFICATION
This is to certify that the herein-named materials are properly classified, described, packaged, marked, and labeled and are in proper condition for transportation according to the applicable regulations of the Department of Transportation. This also certifies that the materials are classified, packaged, marked, and labeled and are in proper condition for transportation and disposal as described in accordance with the requirements of 10 CFR Parts 20 and 61, or equivalent state regulations.

AUTHORIZED SIGNATURE: [signature] TITLE: Broker DATE: 5-11-05

11. U.S. DEPARTMENT OF TRANSPORTATION DESCRIPTION (Including proper shipping name, hazard class, UN ID number, and any additional information)	12. DOT LABEL "RADIOACTIVE"	13. TRANSPORT INDEX	14. PHYSICAL AND CHEMICAL FORM	15. INDIVIDUAL RADIONUCLIDES	16. TOTAL PACKAGE ACTIVITY MBq	16. TOTAL PACKAGE ACTIVITY mCi	17. LSA/SCO CLASS	18. TOTAL WEIGHT OR VOLUME (Use appropriate units)	19. IDENTIFICATION NUMBER OF PACKAGE
Soil,DOT Non-Regulated, containing Radionuclides	NA	NA	Solid / OXIDES	Ac-227 Pa-231 Ra-223 Ra-226 Ra-228 Th-227 Th-228 Th-230 Th-232 U-234 U-Nat	9.3758E-01	2.5340E-02	NA	20440 LBS; 161.59 FT3	9171
Soil,DOT Non-Regulated, containing Radionuclides	NA	NA	Solid / OXIDES	Ac-227 Pa-231 Ra-223 Ra-226 Ra-228 Th-227 Th-228 Th-230 Th-232 U-234 U-Nat	1.6670E+00	4.5053E-02	NA	17380 LBS; 137.3 FT3	9190
Soil,DOT Non-Regulated, containing Radionuclides	NA	NA	Solid / OXIDES	Ac-227 Pa-231 Ra-223 Ra-226 Ra-228 Th-227 Th-228 Th-230 Th-232 U-234 U-Nat	1.0084E+00	2.7254E-02	NA	17730 LBS; 140.08 FT3	9191

FOR CONSIGNEE USE ONLY

____ Record Waste Description Inadequate
____ Contamination or Leakage Detected
____ Unexpected Exposure Rates Detected
____ Labels, Markings, etc. Inadequate
____ Container Integrity Inadequate
____ Other
____ No Violations Detected on this Shipment

20. TERMS AND CONDITIONS

A. HAZARDOUS MATERIALS: Generator represents & warrants that Waste Material __ is (or) ✓ is not a hazardous waste as defined in 40 CFR 261. Where the material is a hazardous waste, this shipment is also accompanied by a separate and completed hazardous waste manifest, along with the appropriate land-disposal restnction notice and/or certification as required by 40 CFR 268.1.

B. TITLE: Upon acceptance at the disposal site by Envirocare of Utah, Inc., and all appropriate regulatory authorities, title to the Waste Material which conforms to Generator's representations herein shall thereupon transfer from Generator and be vested in Envirocare of Utah, Inc.

C. WASTE MATERIAL: Generator represents and warrants that all data set forth in this (UNIFORM LOW-LEVEL RADIOACTIVE WASTE MANIFEST) are true and correct in all respects and in accordance with all applicable governmental laws, rules, regulations and Envirocare of Utah Inc.'s facility license.

D. INDEMNIFICATION: Generator agrees to indemnify Envirocare of Utah, Inc., its officers, employees and agents against all losses and liability whatsoever if such losses or liability results from the failure of the Waste Material to conform in all material respects to the data supplied on the (UNIFORM LOW-LEVEL RADIOACTIVE WASTE MANIFEST,) or if this shipment fails to meet the standards prescribed by the Department of Transportation or any governmental agency having jurisdiction over such matters.

FORM 540A

Envirocare of Utah, Inc.

UNIFORM LOW-LEVEL RADIOACTIVE WASTE MANIFEST

SHIPPING PAPER (CONTINUATION)

8. MANIFEST NUMBER
(Use this number on all continuation pages)
0840-01-978

11. U.S. DEPARTMENT OF TRANSPORTATION DESCRIPTION (Including proper shipping name, hazard class, UN ID number, and any additional information)	12. DOT LABEL "RADIOACTIVE"	13. TRANSPORT INDEX	14. PHYSICAL AND CHEMICAL FORM	15. INDIVIDUAL RADIONUCLIDES				16. TOTAL PACKAGE ACTIVITY MBq	mCi	17. LSA/SCO CLASS	18. TOTAL WEIGHT OR VOLUME (Use appropriate units)	19. IDENTIFICATION NUMBER OF PACKAGE
Soil,DOT Non-Regulated, containing Radionuclides	NA	NA	Solid / OXIDES	Ac-227	Pa-231	Ra-223	Ra-226	1.0315E+01	2.7879E-01	NA	20330 LBS; 160.71 FT3	9200
				Ra-228	Th-227	Th-228	Th-230					
				Th-232	U-234	U-Nat						
Soil,DOT Non-Regulated, containing Radionuclides	NA	NA	Solid / OXIDES	Ac-227	Pa-231	Ra-223	Ra-226	5.4336E+00	1.4685E-01	NA	20290 LBS; 160.4 FT3	9202
				Ra-228	Th-227	Th-228	Th-230					
				Th-232	U-234	U-Nat						
Soil,DOT Non-Regulated, containing Radionuclides	NA	NA	Solid / OXIDES	Ac-227	Pa-231	Ra-223	Ra-226	8.1392E+00	2.1998E-01	NA	19990 LBS; 158.02 FT3	9204
				Ra-228	Th-227	Th-228	Th-230					
				Th-232	U-234	U-Nat						
Soil,DOT Non-Regulated, containing Radionuclides	NA	NA	Solid / OXIDES	Ac-227	Pa-231	Ra-223	Ra-226	5.9959E+00	1.6205E-01	NA	19600 LBS; 154.92 FT3	9205
				Ra-228	Th-227	Th-228	Th-230					
				Th-232	U-234	U-Nat						
Soil,DOT Non-Regulated, containing Radionuclides	NA	NA	Solid / OXIDES	Ac-227	Pa-231	Ra-223	Ra-226	1.4000E+00	3.7837E-02	NA	19650 LBS; 155.32 FT3	9206
				Ra-228	Th-227	Th-228	Th-230					
				Th-232	U-234	U-Nat						
Soil,DOT Non-Regulated, containing Radionuclides	NA	NA	Solid / OXIDES	Ac-227	Pa-231	Ra-223	Ra-226	1.0167E+00	2.7477E-02	NA	16540 LBS; 130.63 FT3	9208
				Ra-228	Th-227	Th-228	Th-230					
				Th-232	U-234	U-Nat						
Soil,DOT Non-Regulated, containing Radionuclides	NA	NA	Solid / OXIDES	Ac-227	Pa-231	Ra-223	Ra-226	3.5463E+00	9.5845E-02	NA	14380 LBS; 113.49 FT3	9211
				Ra-228	Th-227	Th-228	Th-230					

FORM 540A

Envirocare of Utah, Inc.

UNIFORM LOW-LEVEL RADIOACTIVE WASTE MANIFEST

SHIPPING PAPER (CONTINUATION)

8. MANIFEST NUMBER
(Use this number on all continuation pages)
0840-01-978

11. U.S. DEPARTMENT OF TRANSPORTATION DESCRIPTION (Including proper shipping name, hazard class, UN ID number, and any additional information)	12. DOT LABEL "RADIOACTIVE"	13. TRANSPORT INDEX	14. PHYSICAL AND CHEMICAL FORM	15. INDIVIDUAL RADIONUCLIDES				16. TOTAL PACKAGE ACTIVITY MBq	mCi	17. LSA/SCO CLASS	18. TOTAL WEIGHT OR VOLUME (Use appropriate units)	19. IDENTIFICATION NUMBER OF PACKAGE
Soil,DOT Non-Regulated, containing Radionuclides	NA	NA	Solid / OXIDES	Th-232	U-234	U-Nat		3.5463E+00	9.5845E-02	NA	14380 LBS; 113.49 FT3	9211
Soil,DOT Non-Regulated, containing Radionuclides	NA	NA	Solid / OXIDES	Ac-227	Pa-231	Ra-223	Ra-226	8.3530E-01	2.2576E-02	NA	13390 LBS; 105.63 FT3	9219
				Ra-228	Th-227	Th-228	Th-230					
				Th-232	U-234	U-Nat						

FORM 541

Envirocare of Utah, Inc.

UNIFORM LOW-LEVEL RADIOACTIVE WASTE MANIFEST

CONTAINER AND WASTE DESCRIPTION

Additional Nuclear Regulatory Commission (NRC) Requirements for Control, Transfer and Disposal of Radioactive Waste

1. MANIFEST TOTALS

NUMBER OF PACKAGES/ DISPOSAL CONTAINERS	NET WASTE VOLUME	NET WASTE WEIGHT	SPECIAL NUCLEAR MATERIAL (grams) U-233	U-235	Pu	Total
11	m3 44.6864 ft3 1578.0900	kg 90192.3128 ton 99.4200	NP	NP	NP	NP

ACTIVITY	ALL NUCLIDES	TRITIUM	C-14	Tc-99	I-129	SOURCE (kg)	
MBq	3.9602E+01	NP	NP	NP	NP	(kg)	1.2409E+00
mCi	1.0703E+00	NP	NP	NP	NP	(tons)	1.3679E-03

2. MANIFEST NUMBER **0840-01-978**

3. PAGE 1 OF 6 PAGE(S)

4. SHIPPER NAME **GTEOSI**

SHIPMENT ID NUMBER **0840-01-978**

DISPOSAL CONTAINER DESCRIPTION							WASTE DESCRIPTION FOR EACH WASTE TYPE IN CONTAINER										
5. CONTAINER IDENTIFICATION NUMBER/ GENERATOR ID NUMBER(S)	6. CONTAINER DESCRIPTION (See Note 1 & Note 1A)	7. VOLUME (m3)/(ft3)	8. WASTE AND CONTAINER WEIGHT (kg)/(ton)	9. SURFACE RADIATION LEVEL (mSv/hr)/(mrem/hr)	10. SURFACE CONTAMINATION (MBq/100 cm2)/(dpm/100cm2) ALPHA	BETA-GAMMA	PHYSICAL DESCRIPTION 11. WASTE DESCRIPTOR (See Note 2 & Note 2A)	12. APPROXIMATE WASTE VOLUME(S) IN CONTAINER (m3)/(FT3)	13. SOLIDIFICATION OR STABILIZATION MEDIA (See Note 3)	14. CHEMICAL DESCRIPTION CHEMICAL FORM/ CHELATING AGENT	WEIGHT % CHELATING AGENT IF > 0.1%	15. RADIOLOGICAL DESCRIPTION INDIVIDUAL RADIONUCLIDES AND ACTIVITY (MBq) AND CONTAINER TOTAL; OR CONTAINER TOTAL ACTIVITY AND RADIONUCLIDE PERCENT RADIONUCLIDES	pCi/gm	MBq	mCi	16. WASTE CLASSIFICATION AS-Class A Stable AU-Class A Unstable B-Class B C-Class C
9171/GTEOSI	19 Strong Tight Container Loaded in Gondola	4.5757	9271.4287	0.0001	<3.6740E-06	<3.6740E-05	22,59-CONCRETE,59 -MISC DEBRIS-HJ	4.5757	100	OXIDES/NONE	0.00	Ac-227	3.00500E-02	(1.0277E-02)	(2.7777E-04)	AU
		161.5900	10.2200	0.0070	<2.2000E+02	<2.2000E+03		161.5900				Pa-231	2.52200E-01	8.6254E-02	2.3312E-03	
												Ra-223	1.87600E-02	(6.4162E-03)	(1.7341E-04)	
												Ra-226	1.41062E-01	4.8244E-02	1.3039E-03	
												Ra-228	3.38298E-01	1.1570E-01	3.1270E-03	
												Th-227 [8.9602E-15 kg]	3.00500E-02	(1.0277E-02)	(2.7777E-04)	
												Th-228 [4.1185E-12 kg]	3.65354E-01	1.2495E-01	3.3771E-03	
												Th-230 [7.7894E-08 kg]	1.76967E-01	6.0525E-02	1.6358E-03	
												Th-232 [2.8428E-02 kg]	3.38298E-01	1.1570E-01	3.1270E-03	
												U-234 [4.6906E-07 kg]	3.14617E-01	(1.0760E-01)	(2.9082E-03)	
												U-Nat [9.5788E-03 kg]	7.35756E-01	2.5163E-01	6.8009E-03	
												Subtotal		8.0300E-01	2.1703E-02	
												Total		8.0300E-01	2.1703E-02	
												Source [3.8007E-02 kg]				
9190/GTEOSI	19 Strong Tight Container Loaded in Gondola	3.8879	7883.4359	0.0001	<3.6740E-06	<3.6740E-05	22,59-CONCRETE,59 -MISC DEBRIS-HJ	3.8879	100	OXIDES/NONE	0.00	Ac-227	8.36600E-02	2.4312E-02	6.5708E-04	AU
		137.3000	8.6900	0.0060	<2.2000E+02	<2.2000E+03		137.3000				Pa-231	3.01700E-01	8.7675E-02	2.3696E-03	
												Ra-223	3.69400E-02	(1.0735E-02)	(2.9013E-04)	
												Ra-226	1.63495E-01	4.7512E-02	1.2841E-03	
												Ra-228	4.73901E-01	1.3772E-01	3.7221E-03	
												Th-227 [2.1196E-14 kg]	8.36600E-02	2.4312E-02	6.5708E-04	
												Th-228 [4.8072E-12 kg]	5.01887E-01	1.4585E-01	3.9419E-03	
												Th-230 [9.2718E-08 kg]	2.47902E-01	7.2043E-02	1.9471E-03	
												Th-232 [3.3837E-02 kg]	4.73901E-01	1.3772E-01	3.7221E-03	

Note 1: Container Description Codes. For containers/ waste requiring disposal in approved structural over-packs the numerical code must be followed by "-OP."

1. Wooden Box or Crate
2. Metal Box
3. Plastic Drum or Pail
4. Metal Drum or Pail
5. Metal Tank or Liner
6. Concrete Tank or Liner
7. Polyethlene Tank or Liner
8. Fiberglass Tank or Liner
9. Demineralizer
10. Gas Cylinder
11. Bulk, Unpackaged Waste
12. Unpackaged Components
13. High Integrity Container
19. Other. Describe in Item 6, or additional page

Note 1A: Bulk Packaging Description Codes. (Choose one code as may be applicable.)

A Gondola
B Intermodal
C End-Dump
D Roll-off
E Seavan

NOTE 2: Waste Descriptor Codes. (Choose up to three which predominate by volume.)

20. Charcoal
21. Incinerator Ash
22. Soil
23. Gas
24. Oil
25. Aqueous Liquid
26. Filter Media
27. Mechanical Filter
28. EPA or State Hazardous
29. Demolition Rubble
30. Cation Ion-exchange Media
31. Anion Ion-exchange Media
32. Mixed Bed Ion-exchange Media
33. Contaminated Equipment
34. Organic Liquid (except oil)
35. Glassware or Labware
36. Sealed Source/Device
37. Paint or Plating
38. Evaporator Bottoms/Sludges/ Concentrates
39. Compactible Trash
40. Noncompactible Trash
41. Animal Carcass
42. Biological Material (except animal carcass)
43. Activated Material
59. Other. Describe in item 11, or additional page

NOTE 2A: Specific Waste Descriptions (Choose all applicable codes.)

G Dewatered
H Solid
I Combustible
J Non-combustible
K Air Filtration Filters
L Asbestos

Note3: Solidification and Stabilization Media Codes. (Choose up to three which predominate by volume.) For media meeting disposal site structural stability requirements, the numerical code must be followed by "-S." and the media vendor and brand name must also be identified

In Item 13. Code 100=NONE REQUIRED.

Solidification

90. Cement
91. Concrete (encapsulation)
92. Bitumen
93. Vinyl Chloride
94. Vinyl Ester Styrene
99. Other. Describe in item 13, or additional page
100. None Required.

FORM 541A

UNIFORM LOW-LEVEL RADIOACTIVE WASTE MANIFEST

CONTAINER AND WASTE DESCRIPTION (CONTINUATION)

Envirocare of Utah, Inc.

2. MANIFEST NUMBER 0840-01-978

DISPOSAL CONTAINER DESCRIPTION							WASTE DESCRIPTION FOR EACH WASTE TYPE IN CONTAINER									
							PHYSICAL DESCRIPTION			14. CHEMICAL DESCRIPTION		15. RADIOLOGICAL DESCRIPTION				16. WASTE CLASSIFICATION AS-Class A Stable AU-Class A Unstable B-Class B C-Class C
5. CONTAINER IDENTIFICATION NUMBER/ GENERATOR ID NUMBER(S)	6. CONTAINER DESCRIPTION (See Note 1 & Note 1A)	7. VOLUME (m3)/(ft3)	8. WASTE AND CONTAINER WEIGHT (kg)/(ton)	9. SURFACE RADIATION LEVEL (mSv/hr)/(mrem/hr)	10. SURFACE CONTAMINATION (MBq/100 cm2)/(dpm/100cm2) ALPHA	BETA-GAMMA	11. WASTE DESCRIPTOR (See Note 2 & Note 2A)	12. APPROXIMATE WASTE VOLUME(S) IN CONTAINER (m3)/(FT3)	13. SOLIDIFICATION OR STABILIZATION MEDIA (See Note 3)	CHEMICAL FORM/ CHELATING AGENT	WEIGHT % CHELATING AGENT IF > 0.1%	INDIVIDUAL RADIONUCLIDES AND ACTIVITY (MBq) AND CONTAINER TOTAL; OR CONTAINER TOTAL ACTIVITY AND RADIONUCLIDE PERCENT: RADIONUCLIDES	pCi/gm	MBq	mCi	
												U-234 [1.6683E-06 kg]	1.31690E+00	3.8269E-01	1.0343E-02	
												U-Nat [2.2703E-02 kg]	2.05225E+00	5.9640E-01	1.6119E-02	
												Subtotal		1.6562E+00	4.4763E-02	
												Total		1.6562E+00	4.4763E-02	
												Source [5.6542E-02 kg]				
9191/GTEOSI	19 Strong Tight Container Loaded in Gondola	3.9666	8042.1933	0.0001	<3.6740E-06	<3.6740E-05	22,59-CONCRETE,59 -MISC DEBRIS-HJ	3.9666	100	OXIDES/NONE	0.00	Ac-227	6.22200E-02	1.8447E-02	4.9858E-04	AU
												Pa-231	1.56700E-01	(4.6461E-02)	(1.2557E-03)	
												Ra-223	5.70200E-02	(1.6906E-02)	(4.5691E-04)	
		140.0800	8.8650	0.0070	<2.2000E+02	<2.2000E+03		140.0800				Ra-226	1.61027E-01	4.7741E-02	1.2903E-03	
												Ra-228	3.05248E-01	9.0502E-02	2.4460E-03	
												Th-227 [1.6083E-14 kg]	6.22200E-02	1.8447E-02	4.9858E-04	
												Th-228 [3.4485E-12 kg]	3.52892E-01	1.0463E-01	2.8278E-03	
												Th-230 [6.0929E-08 kg]	1.59678E-01	4.7342E-02	1.2795E-03	
												Th-232 [2.2236E-02 kg]	3.05248E-01	9.0502E-02	2.4460E-03	
												U-234 [7.8811E-07 kg]	6.09788E-01	1.8079E-01	4.8863E-03	
												U-Nat [1.3195E-02 kg]	1.16910E+00	3.4662E-01	9.3681E-03	
												Subtotal		9.4502E-01	2.5541E-02	
												Total		9.4502E-01	2.5541E-02	
												Source [3.5432E-02 kg]				
9200/GTEOSI	19 Strong Tight Container Loaded in Gondola	4.5508	9221.5335	0.0001	<3.6740E-06	<3.6740E-05	22,59-CONCRETE,59 -MISC DEBRIS-HJ	4.5508	100	OXIDES/NONE	0.00	Ac-227	7.82100E-02	2.6604E-02	7.1902E-04	AU
												Pa-231	1.76400E-01	(6.0003E-02)	(1.6217E-03)	
												Ra-223	4.84200E-02	(1.6471E-02)	(4.4515E-04)	
		160.7100	10.1650	0.0080	<2.2000E+02	<2.2000E+03		160.7100				Ra-226	2.16711E-01	7.3715E-02	1.9923E-03	
												Ra-228	9.57872E-01	3.2583E-01	8.8062E-03	
												Th-227 [2.3194E-14 kg]	7.82100E-02	2.6604E-02	7.1902E-04	
												Th-228 [1.4872E-11 kg]	1.32651E+00	4.5122E-01	1.2195E-02	
												Th-230 [2.1936E-07 kg]	5.01072E-01	1.7044E-01	4.6066E-03	
												Th-232 [8.0056E-02 kg]	9.57872E-01	3.2583E-01	8.8062E-03	
												U-234 [1.4892E-05 kg]	1.00432E+01	3.4163E+00	9.2333E-02	
												U-Nat [2.0640E-01 kg]	1.59397E+01	5.4220E+00	1.4654E-01	
												Subtotal		1.0239E+01	2.7672E-01	
												Total		1.0239E+01	2.7672E-01	

FORM 541A

UNIFORM LOW-LEVEL RADIOACTIVE WASTE MANIFEST

CONTAINER AND WASTE DESCRIPTION (CONTINUATION)

Envirocare of Utah, Inc.

2. MANIFEST NUMBER 0840-01-978

DISPOSAL CONTAINER DESCRIPTION							WASTE DESCRIPTION FOR EACH WASTE TYPE IN CONTAINER									
							PHYSICAL DESCRIPTION			14. CHEMICAL DESCRIPTION		15. RADIOLOGICAL DESCRIPTION				16. WASTE CLASSIFICATION AS-Class A Stable AU-Class A Unstable B-Class B C-Class C
5. CONTAINER IDENTIFICATION NUMBER/ GENERATOR ID NUMBER(S)	6. CONTAINER DESCRIPTION (See Note 1 & Note 1A)	7. VOLUME (m3)/(ft3)	8. WASTE AND CONTAINER WEIGHT (kg)/(lon)	9. SURFACE RADIATION LEVEL (mSv/hr)/(mrem/hr)	10. SURFACE CONTAMINATION (MBq/100 cm2)/(dpm/100cm2) ALPHA	BETA-GAMMA	11. WASTE DESCRIPTOR (See Note 2 & Note 2A)	12. APPROXIMATE WASTE VOLUME(S) IN CONTAINER (m3)/(FT3)	13. SOLIDIFICATION OR STABILIZATION MEDIA (See Note 3)	CHEMICAL FORM/ CHELATING AGENT	WEIGHT % CHELATING AGENT IF > 0.1%	INDIVIDUAL RADIONUCLIDES AND ACTIVITY (MBq) AND CONTAINER TOTAL; OR CONTAINER TOTAL ACTIVITY AND RADIONUCLIDE PERCENT: RADIONUCLIDES	pCi/gm	MBq	mCi	
												Source [2.8647E-01 kg]				
9202/GTEOSI	19 Strong Tight Container Loaded in Gondola	4.5420	9203.3898	0.0001	<3.6740E-06	<3.6740E-05	22,59-CONCRETE,59 -MISC DEBRIS-HJ	4.5420	100	OXIDES/NONE	0.00	Ac-227	5.33600E-02	1.8115E-02	4.8960E-04	AU
												Pa-231	1.70700E-01	(5.7949E-02)	(1.5662E-03)	
												Ra-223	5.17800E-02	(1.7579E-02)	(4.7510E-04)	
		160.4000	10.1450	0.0080	<2.2000E+02	<2.2000E+03		160.4000				Ra-226	1.83823E-01	6.2404E-02	1.6866E-03	
												Ra-228	7.58014E-01	2.5734E-01	6.9550E-03	
												Th-227 [1.5793E-14 kg]	5.33600E-02	1.8115E-02	4.8960E-04	
												Th-228 [1.1090E-11 kg]	9.91133E-01	3.3648E-01	9.0940E-03	
												Th-230 [1.7325E-07 kg]	3.96524E-01	1.3462E-01	3.6383E-03	
												Th-232 [6.3228E-02 kg]	7.58014E-01	2.5734E-01	6.9550E-03	
												U-234 [7.0845E-06 kg]	4.78719E+00	1.6252E+00	4.3924E-02	
												U-Nat [1.0082E-01 kg]	7.80142E+00	2.6485E+00	7.1581E-02	
												Subtotal		5.3581E+00	1.4481E-01	
												Total		5.3581E+00	1.4481E-01	
												Source [1.6405E-01 kg]				
9204/GTEOSI	19 Strong Tight Container Loaded in Gondola	4.4746	9067.3121	0.0001	<3.6740E-06	<3.6740E-05	22,59-CONCRETE,59 -MISC DEBRIS-HJ	4.4746	100	OXIDES/NONE	0.00	Ac-227	6.09400E-02	(2.0381E-02)	(5.5085E-04)	AU
												Pa-231	4.86600E-01	1.6274E-01	4.3985E-03	
												Ra-223	1.42500E-01	4.7660E-02	1.2881E-03	
		158.0200	9.9950	0.0100	<2.2000E+02	<2.2000E+03		158.0200				Ra-226	2.10976E-01	7.0559E-02	1.9070E-03	
												Ra-228	1.01121E+00	3.3819E-01	9.1404E-03	
												Th-227 [1.7769E-14 kg]	6.09400E-02	(2.0381E-02)	(5.5085E-04)	
												Th-228 [1.2457E-11 kg]	1.13001E+00	3.7792E-01	1.0214E-02	
												Th-230 [2.2769E-07 kg]	5.28971E-01	1.7692E-01	4.7815E-03	
												Th-232 [8.3095E-02 kg]	1.01121E+00	3.3819E-01	9.1404E-03	
												U-234 [1.1052E-05 kg]	7.58083E+00	2.5354E+00	6.8524E-02	
												U-Nat [1.5420E-01 kg]	1.21121E+01	4.0508E+00	1.0948E-01	
												Subtotal		8.0984E+00	2.1887E-01	
												Total		8.0984E+00	2.1887E-01	
												Source [2.3731E-01 kg]				

FORM 541A

UNIFORM LOW-LEVEL RADIOACTIVE WASTE MANIFEST

CONTAINER AND WASTE DESCRIPTION (CONTINUATION)

Envirocare of Utah, Inc.

2. MANIFEST NUMBER 0840-01-978

DISPOSAL CONTAINER DESCRIPTION							WASTE DESCRIPTION FOR EACH WASTE TYPE IN CONTAINER									
							PHYSICAL DESCRIPTION			CHEMICAL DESCRIPTION		RADIOLOGICAL DESCRIPTION				
5. CONTAINER IDENTIFICATION NUMBER/ GENERATOR ID NUMBER(S)	6. CONTAINER DESCRIPTION (See Note 1 & Note 1A)	7. VOLUME (m3) / (ft3)	8. WASTE AND CONTAINER WEIGHT (kg) / (ton)	9. SURFACE RADIATION LEVEL (mSv/hr) / (mrem/hr)	10. SURFACE CONTAMINATION (MBq/100 cm2) / (dpm/100cm2) ALPHA	BETA-GAMMA	11. WASTE DESCRIPTOR (See Note 2 & Note 2A)	12. APPROXIMATE WASTE VOLUME(S) IN CONTAINER (m3) / (FT3)	13. SOLIDIFICATION OR STABILIZATION MEDIA (See Note 3)	CHEMICAL FORM/ CHELATING AGENT	WEIGHT % CHELATING AGENT IF > 0.1%	INDIVIDUAL RADIONUCLIDES AND ACTIVITY (MBq) AND CONTAINER TOTAL; OR CONTAINER TOTAL ACTIVITY AND RADIONUCLIDE PERCENT: RADIONUCLIDES	pCi/gm	MBq	mCi	16. WASTE CLASSIFICATION AS-Class A Stable AU-Class A Unstable B-Class B C-Class C
9205/GTEOSI	19 Strong Tight Container Loaded in Gondola	4.3868	8890.4110	0.0001	<3.6740E-06	<3.6740E-05	22,59-CONCRETE,59 -MISC DEBRIS-HJ	4.3868	100	OXIDES/NONE	0.00	Ac-227	1.02100E-01	3.3478E-02	9.0482E-04	AU
												Pa-231	5.39200E-01	1.7680E-01	4.7784E-03	
												Ra-223	6.45800E-02	(2.1175E-02)	(5.7231E-04)	
		154.9200	9.8000	0.0080	<2.2000E+02	<2.2000E+03		154.9200				Ra-226	2.48292E-01	8.1415E-02	2.2004E-03	
												Ra-228	1.19830E+00	3.9290E-01	1.0619E-02	
												Th-227 [2.9188E-14 kg]	1.02100E-01	3.3478E-02	9.0482E-04	
												Th-228 [1.4418E-11 kg]	1.33409E+00	4.3745E-01	1.1823E-02	
												Th-230 [2.6453E-07 kg]	6.26841E-01	2.0554E-01	5.5551E-03	
												Th-232 [9.6540E-02 kg]	1.19830E+00	3.9290E-01	1.0619E-02	
												U-234 [6.9823E-06 kg]	4.88487E+00	1.6017E+00	4.3290E-02	
												U-Nat [9.9694E-02 kg]	7.98713E+00	2.6190E+00	7.0783E-02	
												Subtotal		5.9747E+00	1.6148E-01	
												Total		5.9747E+00	1.6148E-01	
												Source [1.9624E-01 kg]				
9206/GTEOSI	19 Strong Tight Container Loaded in Gondola	4.3982	8913.0907	0.0001	<3.6740E-06	<3.6740E-05	22,59-CONCRETE,59 -MISC DEBRIS-HJ	4.3982	100	OXIDES/NONE	0.00	Ac-227	4.57400E-02	1.5036E-02	4.0639E-04	AU
												Pa-231	1.48400E-01	(4.8785E-02)	(1.3185E-03)	
												Ra-223	2.78000E-02	(9.1390E-03)	(2.4700E-04)	
		155.3200	9.8250	0.0060	<2.2000E+02	<2.2000E+03		155.3200				Ra-226	1.29736E-01	4.2650E-02	1.1527E-03	
												Ra-228	3.47660E-01	1.1429E-01	3.0889E-03	
												Th-227 [1.3109E-14 kg]	4.57400E-02	1.5036E-02	4.0639E-04	
												Th-228 [5.1249E-12 kg]	4.72991E-01	1.5549E-01	4.2024E-03	
												Th-230 [7.6944E-08 kg]	1.81864E-01	5.9785E-02	1.6158E-03	
												Th-232 [2.8081E-02 kg]	3.47660E-01	1.1429E-01	3.0889E-03	
												U-234 [1.3043E-06 kg]	9.10197E-01	2.9922E-01	8.0869E-03	
												U-Nat [2.0032E-02 kg]	1.60081E+00	5.2625E-01	1.4223E-02	
												Subtotal		1.3420E+00	3.6271E-02	
												Total		1.3420E+00	3.6271E-02	
												Source [4.8114E-02 kg]				
9208/GTEOSI	19 Strong Tight Container Loaded in Gondola	3.6990	7502.4183	0.0001	<3.6740E-06	<3.6740E-05	22,59-CONCRETE,59 -MISC DEBRIS-HJ	3.6990	100	OXIDES/NONE	0.00	Ac-227	2.79900E-02	(7.7393E-03)	(2.0917E-04)	AU
												Pa-231	1.67300E-01	(4.6257E-02)	(1.2502E-03)	
												Ra-223	3.24200E-02	(8.9640E-03)	(2.4227E-04)	
		130.6300	8.2700	0.0070	<2.2000E+02	<2.2000E+03		130.6300				Ra-226	2.04296E-01	5.6488E-02	1.5267E-03	
												Ra-228	5.08652E-01	1.4064E-01	3.8011E-03	

FORM 541A

UNIFORM LOW-LEVEL RADIOACTIVE WASTE MANIFEST

CONTAINER AND WASTE DESCRIPTION (CONTINUATION)

Envirocare of Utah, Inc.

2. MANIFEST NUMBER 0840-01-978

DISPOSAL CONTAINER DESCRIPTION							WASTE DESCRIPTION FOR EACH WASTE TYPE IN CONTAINER										
							PHYSICAL DESCRIPTION			14. CHEMICAL DESCRIPTION		15. RADIOLOGICAL DESCRIPTION					16. WASTE CLASSIFICATION AS-Class A Stable AU-Class A Unstable B-Class B C-Class C
5. CONTAINER IDENTIFICATION NUMBER/ GENERATOR ID NUMBER(S)	6. CONTAINER DESCRIPTION (See Note 1 & Note 1A)	7. VOLUME (m3) / (ft3)	8. WASTE AND CONTAINER WEIGHT (kg) / (ton)	9. SURFACE RADIATION LEVEL (mSv/hr) / (mrem/hr)	10. SURFACE CONTAMINATION (MBq/100 cm2) / (dpm/100cm2) ALPHA	BETA-GAMMA	11. WASTE DESCRIPTOR (See Note 2 & Note 2A)	12. APPROXIMATE WASTE VOLUME(S) IN CONTAINER (m3) / (FT3)	13. SOLIDIFICATION OR STABILIZATION MEDIA (See Note 3)	CHEMICAL FORM/ CHELATING AGENT	WEIGHT % CHELATING AGENT IF > 0.1%	INDIVIDUAL RADIONUCLIDES AND ACTIVITY (MBq) AND CONTAINER TOTAL; OR CONTAINER TOTAL ACTIVITY AND RADIONUCLIDE PERCENT: RADIONUCLIDES	pCi/gm	MBq	mCi	
												Th-227 [6.7473E-15 kg]	2.79900E-02	(7.7393E-03)	(2.0917E-04)	
												Th-228 [4.7746E-12 kg]	5.23920E-01	1.4486E-01	3.9152E-03	
												Th-230 [9.4685E-08 kg]	2.66081E-01	7.3571E-02	1.9884E-03	
												Th-232 [3.4555E-02 kg]	5.08652E-01	1.4064E-01	3.8011E-03	
												U-234 [5.5046E-07 kg]	4.56697E-01	1.2627E-01	3.4128E-03	
												U-Nat [1.0030E-02 kg]	9.52961E-01	2.6349E-01	7.1213E-03	
												Subtotal		9.4596E-01	2.5567E-02	
												Total		9.4596E-01	2.5567E-02	
												Source [4.4586E-02 kg]				
9211/GTEOSI	19 Strong Tight Container Loaded in Gondola	3.2137	6522.6587	0.0001	<3.6740E-06	<3.6740E-05	22,59-CONCRETE,59 -MISC DEBRIS-HJ	3.2137	100	OXIDES/NONE	0.00	Ac-227	6.54900E-02	(1.5731E-02)	(4.2517E-04)	AU
												Pa-231	2.34600E-01	(5.6355E-02)	(1.5231E-03)	
												Ra-223	4.67500E-02	(1.1230E-02)	(3.0351E-04)	
		113.4900	7.1900	0.0080	<2.2000E+02	<2.2000E+03		113.4900				Ra-226	1.89922E-01	4.5621E-02	1.2330E-03	
												Ra-228	6.20000E-01	1.4893E-01	4.0252E-03	
												Th-227 [1.3715E-14 kg]	6.54900E-02	(1.5731E-02)	(4.2517E-04)	
												Th-228 [5.8110E-12 kg]	7.33958E-01	1.7631E-01	4.7650E-03	
												Th-230 [1.0027E-07 kg]	3.24328E-01	7.7907E-02	2.1056E-03	
												Th-232 [3.6592E-02 kg]	6.20000E-01	1.4893E-01	4.0252E-03	
												U-234 [4.7850E-06 kg]	4.56963E+00	1.0977E+00	2.9667E-02	
												U-Nat [6.6686E-02 kg]	7.29294E+00	1.7518E+00	4.7347E-02	
												Subtotal		3.4472E+00	9.3168E-02	
												Total		3.4472E+00	9.3168E-02	
												Source [1.0328E-01 kg]				
9219/GTEOSI	19 Strong Tight Container Loaded in Gondola	2.9911	6073.6022	0.0001	<3.6740E-06	<3.6740E-05	22,59-CONCRETE,59 -MISC DEBRIS-HJ	2.9911	100	OXIDES/NONE	0.00	Ac-227	4.89400E-02	1.0942E-02	2.9573E-04	AU
												Pa-231	1.47700E-01	(3.3023E-02)	(8.9251E-04)	
												Ra-223	4.31400E-02	(9.6452E-03)	(2.6068E-04)	
		105.6300	6.6950	0.0060	<2.2000E+02	<2.2000E+03		105.6300				Ra-226	1.31987E-01	2.9510E-02	7.9756E-04	
												Ra-228	3.59858E-01	8.0457E-02	2.1745E-03	
												Th-227 [9.5397E-15 kg]	4.89400E-02	1.0942E-02	2.9573E-04	
												Th-228 [3.0730E-12 kg]	4.17005E-01	9.3236E-02	2.5199E-03	
												Th-230 [5.4168E-08 kg]	1.88245E-01	4.2088E-02	1.1375E-03	
												Th-232 [1.9768E-02 kg]	3.59858E-01	8.0457E-02	2.1745E-03	

FORM 541A

UNIFORM LOW-LEVEL RADIOACTIVE WASTE MANIFEST

CONTAINER AND WASTE DESCRIPTION (CONTINUATION)

Envirocare of Utah, Inc.

2. MANIFEST NUMBER 0840-01-978

DISPOSAL CONTAINER DESCRIPTION							WASTE DESCRIPTION FOR EACH WASTE TYPE IN CONTAINER									
							PHYSICAL DESCRIPTION			14. CHEMICAL DESCRIPTION		15. RADIOLOGICAL DESCRIPTION				16. WASTE CLASSIFICATION AS-Class A Stable AU-Class A Unstable B-Class B C-Class C
5. CONTAINER IDENTIFICATION NUMBER/ GENERATOR ID NUMBER(S)	6. CONTAINER DESCRIPTION (See Note 1 & Note 1A)	7. VOLUME (m3)/(ft3)	8. WASTE AND CONTAINER WEIGHT (kg)/(ton)	9. SURFACE RADIATION LEVEL (mSv/hr)/(mrem/hr)	10. SURFACE CONTAMINATION (MBq/100 cm2)/(dpm/100cm2) ALPHA	BETA-GAMMA	11. WASTE DESCRIPTOR (See Note 2 & Note 2A)	12. APPROXIMATE WASTE VOLUME(S) IN CONTAINER (m3)/(FT3)	13. SOLIDIFICATION OR STABILIZATION MEDIA (See Note 3)	CHEMICAL FORM/ CHELATING AGENT	WEIGHT % CHELATING AGENT IF > 0.1%	INDIVIDUAL RADIONUCLIDES AND ACTIVITY (MBq) AND CONTAINER TOTAL; OR CONTAINER TOTAL ACTIVITY AND RADIONUCLIDE PERCENT: RADIONUCLIDES	pCi/gm	MBq	mCi	
												U-234 [6.6858E-07 kg]	6.85978E-01	1.5337E-01	4.1452E-03	
												U-Nat [1.1101E-02 kg]	1.30435E+00	2.9163E-01	7.8819E-03	
												Subtotal		7.9263E-01	2.1423E-02	
3M												Total		7.9263E-01	2.1423E-02	
												Source [3.0870E-02 kg]				
Shipment Totals		44.6864	90591.4742									Source [1.2409E+00 kg]		3.9602E+01	1.0703E+00	
		1578.0900	99.8600													

Envirocare of Utah, Inc.

ADDITIONAL NOTES

Manifest Number
0840-01-978
PAGE 1

New York State Waste Transporter Part 364 permit No. 4A-288
New York State Waste Transporter Part 381 permit Number 4A-288

UNIFORM LOW-LEVEL RADIOACTIVE WASTE MANIFEST
ISOTOPES REPORT

For Manifest # 0840-01-978
Envirocare of Utah, Inc.

	Total Activity		
Isotope	**(MBq)**	**(mCi)**	**(Ci)**
Ac-227	2.0106E-01	5.4342E-03	5.4342E-06
Pa-231	8.6231E-01	2.3306E-02	2.3306E-05
Ra-223	1.7592E-01	4.7545E-03	4.7545E-06
Ra-226	6.0586E-01	1.6375E-02	1.6375E-05
Ra-228	2.1425E+00	5.7906E-02	5.7906E-05
Th-227	2.0106E-01	5.4342E-03	5.4342E-06
Th-228	2.5484E+00	6.8876E-02	6.8876E-05
Th-230	1.1208E+00	3.0291E-02	3.0291E-05
Th-232	2.1425E+00	5.7906E-02	5.7906E-05
U-234	1.1526E+01	3.1152E-01	3.1152E-04
U-Nat	1.8768E+01	5.0725E-01	5.0725E-04

FORM 540 — Envirocare of Utah, Inc.

UNIFORM LOW-LEVEL RADIOACTIVE WASTE MANIFEST

SHIPPING PAPER

1. EMERGENCY TELEPHONE NUMBER (Include Area Code): 1-800-424-9300

ORGANIZATION: Chemtrec

2. IS THIS AN "EXCLUSIVE USE" SHIPMENT? ☐ YES ☑ NO

3. TOTAL NUMBER OF PACKAGES IDENTIFIED ON THIS MANIFEST ====> 11

4. DOES EPA REGULATED WASTE REQUIRING A MANIFEST ACCOMPANY THIS SHIPMENT? ☐ YES ☑ NO
If "Yes," provide Manifest Number ====>

EPA MANIFEST NUMBER

5. SHIPPER -- NAME AND FACILITY
GTEOSI
140 Cantiague Rock RD
Hicksville, NY 11801

Utah Generator Site Access Permit No.: 020 500 1352

SHIPMENT NUMBER: MHFX-5213

CONTACT: Jean Agostinelli

6. CARRIER -- Name and Address
Priority Transport Services, Inc.
391 Anthony Street
Schenectady, NY 12308

CONTACT: Dispatch

SIGNATURE -- Authorized carrier acknowledging waste receipt

SHIPPER I.D. NUMBER: 0840-01-978

☐ COLLECTOR
☐ PROCESSOR
☑ GENERATOR TYPE (Specify) I

TELEPHONE NUMBER (Include Area Code): 516-932-9157

EPA I.D. NUMBER: NYR000164976

SHIPPING DATE: 05/11/2005

TELEPHONE (Include Area Code): 800-235-0069

DATE: 5-11-05

7. FORM 540 AND 540A — PAGE 1 OF 3 PAGE(S)
FORM 541 AND 541A — 6 PAGE(S)
FORM 542 AND 542A — None PAGE(S)
ADDITIONAL INFORMATION — None PAGE(S)

8. MANIFEST NUMBER (Use this number on all continuation pages): 0840-01-978

9. CONSIGNEE - Name and Facility
Envirocare of Utah, Inc.
Clive Disposal Site (Bulk Waste Facility)
Interstate 80, Exit 49
Clive, UT 84029

L 84524

CONTACT: Shipping and Receiving
TELEPHONE (Include Area Code): (435)884-0155

SIGNATURE -- Authorized consignee acknowledging waste receipt

DATE: 5-25-05

10. CERTIFICATION
This is to certify that the herein-named materials are properly classified, described, packaged, marked, and labeled and are in proper condition for transportation according to the applicable regulations of the Department of Transportation. This also certifies that the materials are classified, packaged, marked, and labeled and are in proper condition for transportation and disposal as described in accordance with the requirements of 10 CFR Parts 20 and 61, or equivalent state regulations.

AUTHORIZED SIGNATURE | TITLE: Broker | DATE: 5-11-05

11. U.S. DEPARTMENT OF TRANSPORTATION DESCRIPTION (Including proper shipping name, hazard class, UN ID number, and any additional information)	12. DOT LABEL "RADIOACTIVE"	13. TRANSPORT INDEX	14. PHYSICAL AND CHEMICAL FORM	15. INDIVIDUAL RADIONUCLIDES	16. TOTAL PACKAGE ACTIVITY MBq	mCi	17. LSA/SCO CLASS	18. TOTAL WEIGHT OR VOLUME (Use appropriate units)	19. IDENTIFICATION NUMBER OF PACKAGE
Soil,DOT Non-Regulated, containing Radionuclides	NA	NA	Solid / OXIDES	Ac-227 Pa-231 Ra-223 Ra-226 Ra-228 Th-227 Th-228 Th-230 Th-232 U-234 U-Nat	9.3758E-01	2.5340E-02	NA	20440 LBS; 161.59 FT3	9171
Soil,DOT Non-Regulated, containing Radionuclides	NA	NA	Solid / OXIDES	Ac-227 Pa-231 Ra-223 Ra-226 Ra-228 Th-227 Th-228 Th-230 Th-232 U-234 U-Nat	1.6670E+00	4.5053E-02	NA	17380 LBS; 137.3 FT3	9190
Soil,DOT Non-Regulated, containing Radionuclides	NA	NA	Solid / OXIDES	Ac-227 Pa-231 Ra-223 Ra-226 Ra-228 Th-227 Th-228 Th-230 Th-232 U-234 U-Nat	1.0084E+00	2.7254E-02	NA	17730 LBS; 140.08 FT3	9191

FOR CONSIGNEE USE ONLY

- ____ Record Waste Description Inadequate
- ____ Contamination or Leakage Detected
- ____ Unexpected Exposure Rates Detected
- ____ Labels, Markings, etc. Inadequate
- ____ Container Integrity Inadequate
- ✓ Other
- ✓ No Violations Detected on this Shipment

20. TERMS AND CONDITIONS

A. HAZARDOUS MATERIALS: Generator represents & warrants that Waste Material __ is (or) ✓ is not a hazardous waste as defined in 40 CFR 261. Where the material is a hazardous waste, this shipment is also accompanied by a separate and completed hazardous waste manifest, along with the appropriate land-disposal restriction notice and/or certification as required by 40 CFR 268.1.

B. TITLE: Upon acceptance at the disposal site by Envirocare of Utah, Inc., and all appropriate regulatory authorities, title to the Waste Material which conforms to Generator's representations herein shall thereupon transfer from Generator and be vested in Envirocare of Utah, Inc.

C. WASTE MATERIAL: Generator represents and warrants that all data set forth in this (UNIFORM LOW-LEVEL RADIOACTIVE WASTE MANIFEST) are true and correct in all respects and in accordance with all applicable governmental laws, rules, regulations and Envirocare of Utah Inc.'s facility license.

D. INDEMNIFICATION: Generator agrees to indemnify Envirocare of Utah, Inc., its officers, employees and agents against all losses and liability whatsoever if such losses or liability results from the failure of the Waste Material to conform in all material respects to the data supplied on the (UNIFORM LOW-LEVEL RADIOACTIVE WASTE MANIFEST,) or if this shipment fails to meet the standards prescribed by the Department of Transportation or any governmental agency having jurisdiction over such matters.

FORM 540 (04-03)

FORM 540A

Envirocare of Utah, Inc.

UNIFORM LOW-LEVEL RADIOACTIVE WASTE MANIFEST

SHIPPING PAPER (CONTINUATION)

6. MANIFEST NUMBER (Use this number on all continuation pages) 0840-01-978

11. U.S. DEPARTMENT OF TRANSPORTATION DESCRIPTION (Including proper shipping name, hazard class, UN ID number, and any additional information)	12. DOT LABEL "RADIOACTIVE"	13. TRANSPORT INDEX	14. PHYSICAL AND CHEMICAL FORM	15. INDIVIDUAL RADIONUCLIDES				16. TOTAL PACKAGE ACTIVITY MBq	mCi	17. LSA/SCO CLASS	18. TOTAL WEIGHT OR VOLUME (Use appropriate units)	19. IDENTIFICATION NUMBER OF PACKAGE
Soil,DOT Non-Regulated, containing Radionuclides	NA	NA	Solid / OXIDES	Ac-227	Pa-231	Ra-223	Ra-226	1.0315E+01	2.7879E-01	NA	20330 LBS; 160.71 FT3	9200
				Ra-228	Th-227	Th-228	Th-230					
				Th-232	U-234	U-Nat						
Soil,DOT Non-Regulated, containing Radionuclides	NA	NA	Solid / OXIDES	Ac-227	Pa-231	Ra-223	Ra-226	5.4336E+00	1.4685E-01	NA	20290 LBS; 160.4 FT3	9202
				Ra-228	Th-227	Th-228	Th-230					
				Th-232	U-234	U-Nat						
Soil,DOT Non-Regulated, containing Radionuclides	NA	NA	Solid / OXIDES	Ac-227	Pa-231	Ra-223	Ra-226	8.1392E+00	2.1998E-01	NA	19990 LBS; 158.02 FT3	9204
				Ra-228	Th-227	Th-228	Th-230					
				Th-232	U-234	U-Nat						
Soil,DOT Non-Regulated, containing Radionuclides	NA	NA	Solid / OXIDES	Ac-227	Pa-231	Ra-223	Ra-226	5.9959E+00	1.6205E-01	NA	19600 LBS; 154.92 FT3	9205
				Ra-228	Th-227	Th-228	Th-230					
				Th-232	U-234	U-Nat						
Soil,DOT Non-Regulated, containing Radionuclides	NA	NA	Solid / OXIDES	Ac-227	Pa-231	Ra-223	Ra-226	1.4000E+00	3.7837E-02	NA	19650 LBS; 155.32 FT3	9206
				Ra-228	Th-227	Th-228	Th-230					
				Th-232	U-234	U-Nat						
Soil,DOT Non-Regulated, containing Radionuclides	NA	NA	Solid / OXIDES	Ac-227	Pa-231	Ra-223	Ra-226	1.0167E+00	2.7477E-02	NA	16540 LBS; 130.63 FT3	9208
				Ra-228	Th-227	Th-228	Th-230					
				Th-232	U-234	U-Nat						
Soil,DOT Non-Regulated, containing Radionuclides	NA	NA	Solid / OXIDES	Ac-227	Pa-231	Ra-223	Ra-226	3.5463E+00	9.5845E-02	NA	14380 LBS; 113.49 FT3	9211
				Ra-228	Th-227	Th-228	Th-230					

FORM 540A

Envirocare of Utah, Inc.

UNIFORM LOW-LEVEL RADIOACTIVE WASTE MANIFEST

SHIPPING PAPER (CONTINUATION)

8. MANIFEST NUMBER
(Use this number on all continuation pages)
0840-01-978

11. U.S. DEPARTMENT OF TRANSPORTATION DESCRIPTION (Including proper shipping name, hazard class, UN ID number, and any additional information)	12. DOT LABEL "RADIOACTIVE"	13. TRANSPORT INDEX	14. PHYSICAL AND CHEMICAL FORM	15. INDIVIDUAL RADIONUCLIDES				16. TOTAL PACKAGE ACTIVITY MBq	mCi	17. LSA/SCO CLASS	18. TOTAL WEIGHT OR VOLUME (Use appropriate units)	19. IDENTIFICATION NUMBER OF PACKAGE
Soil,DOT Non-Regulated, containing Radionuclides	NA	NA	Solid / OXIDES	Th-232	U-234	U-Nat		3.5463E+00	9.5845E-02	NA	14380 LBS; 113.49 FT3	9211
Soil,DOT Non-Regulated, containing Radionuclides	NA	NA	Solid / OXIDES	Ac-227	Pa-231	Ra-223	Ra-226	8.3530E-01	2.2576E-02	NA	13390 LBS; 105.63 FT3	9219
				Ra-228	Th-227	Th-228	Th-230					
				Th-232	U-234	U-Nat						

FORM 540A (04-03)

Shipment Survey

Survey Number: FTEOSI-05-00332 Date: 4-22-05 Time: 1030

Waste Container Type: Super Sack Intermodal Other: SOIL

Waste Container ID #: 9190 Storage Bin: N/A Gross Weight: 17380 lbs

	Ludlum 3030		Ludlum 3030		Ludlum 3030		L-19
Serial #	190646		196165		N		193615
Probe #	N/A		N/A				N/A
Calibration Due Date:	12-13-05		7-18-05				3-29-06
	α	β	α	β	α	β	
Background	0 cpm	25 cpm	0 cpm	25 cpm	cpm	cpm	5 μR/hr
Efficiency	29 %	25 %	29 %	25 %	%	%	
MDA	25 dpm	130 dpm	25 dpm	130 dpm	dpm	A dpm	

Maximum Contact Dose Rate: .006 mrem/hr Transport Index: 0 mrem/hr

	α cpm	α dpm/100 cm2	β cpm	β dpm/100 cm2
ALARA Limit	N/A	60	N/A	500
Smear #				
1	0	<MDA	29	<MDA
2	0		18	
3	0		39	
4	0		29	
5	0		29	
6	0		33	

Smear Locations: 1 - Bottom 2 - Front 3 - Right Side 4 - Back 5 - Left Side 6 - Top

JOHN MITCHELL SR
Surveyor Name

Surveyor Signature

Supervisor Approval

30555-S-U05XX9190-99.9
Date: 04/26/05 Time:1017

4-22-05 10:21 Bag# 9190
17380 lb GR
042205 1021 9190 0017380

Shipment Survey

Survey Number: GTEOSI-05-00333 Date: 4-22-05 Time: 1530

Waste Container Type: Super Sack Intermodal Other: SOIL

Waste Container ID #: 9191 Storage Bin: N/A Gross Weight: 17730 lbs

	Ludlum 3030		Ludlum 3030		Ludlum 3030		L-19
Serial #	190646		196165		N		193615
Probe #	N/A		N/A				N/A
Calibration Due Date:	12-13-05		7-18-05				3-29-06
	α	β	α	β	α	β	
Background	0 cpm	25 cpm	0 cpm	25 cpm	cpm	cpm	5 uR/hr
Efficiency	29 %	25 %	29 %	25 %	%	%	
MDA	25 dpm	130 dpm	25 dpm	130 dpm	dpm	A dpm	

Maximum Contact Dose Rate: 0.007 mrem/hr Transport Index: 0 mrem/hr

	α cpm	α dpm/100 cm2	β cpm	β dpm/100 cm2
ALARA Limit	N/A	60	N/A	500
Smear #				
1	0	<MDA	24	<MDA
2	1		31	
3	0		33	
4	0		32	
5	0		19	
6	0		21	

Smear Locations: 1 - Bottom 2 - Front 3 - Right Side 4 - Back 5 - Left Side 6 - Top

JOHN MITCHELL SR
Surveyor Name

John Mitchell, Sr.
Surveyor Signature

M. V.
Supervisor Approval

29539-S-U07XX9191-99.9
Date: 04/11/05 Time:1050

4-25-05 15:29 Bag# 9191
17730 lb GR
042505 1529 9191 0017730

BagNum	MANIFEST GROSS WEIGHT
9200	20330

Shipment Survey

Survey Number: GTEOSI-04-10516 Date: 12.14.04 Time: 0930

Waste Container Type: Super Sack Intermodal Other: soil

Waste Container ID #: 9200 Storage Bin: 41 Gross Weight: 20330 lbs

	Ludlum 3030		Ludlum 3030		Ludlum 3030		Ludlum 19
Serial #	190641		191265		N		193615
Probe #	N/A		N/A				N/A
Calibration Due Date:	3-4-05		4-20-05			A	5-19-05
	α	β	α	β	α	β	
Background	0 cpm	25 cpm	0 cpm	25 cpm	N cpm	cpm	6 μR/hr
Efficiency	29 %	25 %	29 %	25 %	%	%	
MDA	25 dpm	130 dpm	25 dpm	130 dpm	dpm	A dpm	

Maximum Contact Dose Rate: .008 mrem/hr Transport Index: 0 mrem/hr

	α cpm	α dpm/100 cm2	β cpm	β dpm/100 cm2
ALARA Limit	N/A	60	N/A	500
Smear #				
1	1	<MDA	33	<MDA
2	1		42	
3	0		28	
4	1		21	
5	0		28	
6	0		35	

Smear Locations: 1 - Bottom 2 - Front 3 - Right Side 4 - Back 5 - Left Side 6 - Top

DEBRA LePage — Debra LePage

Surveyor Name — Surveyor Signature

George Economos

Supervisor Approval

23:27-S-DRQ129200-05.0

Date: 12/14/04 Time:1756

1-06-05 14:27 Bag# 9200

20330 lb GR

010605 1427 9200 0020330

Shipment Survey

Survey Number: GEOSE-05-00334 Date: 4-25-05 Time: 1630

Waste Container Type: Super Sack Intermodal Other: SOIL

Waste Container ID #: 9204 Storage Bin: N/A Gross Weight: 19990 lbs

	Ludlum 3030		Ludlum 3030		Ludlum 3030		L-19
Serial #	190646		196165		N		193615
Probe #	N/A		N/A				N/A
Calibration Due Date:	12-13-05		7-18-05				3-29-06
	α	β	α	β	α	β	
Background	0 cpm	25 cpm	0 cpm	25 cpm	cpm	cpm	5 μR/hr
Efficiency	29 %	25 %	29 %	25 %	%	%	
MDA	25 dpm	130 dpm	25 dpm	130 dpm	dpm	A dpm	

Maximum Contact Dose Rate: .010 mrem/hr Transport Index: 0 mrem/hr

	α cpm	α dpm/100 cm2	β cpm	β dpm/100 cm2
ALARA Limit	N/A	60	N/A	500
Smear #				
1	1	<MDA	33	<MDA
2	0		23	
3	0		28	
4	0		24	
5	0		24	
6	0		29	

Smear Locations: 1 - Bottom 2 - Front 3 - Right Side 4 - Back 5 - Left Side 6 - Top

JOHN MITCHELL, SR
Surveyor Name

John Mitchell, Sr.
Surveyor Signature

Supervisor Approval

38525-S-DRQ129204-99.9
Date: 04/25/05 Time:1759

4-25-05 16:26 Bag# 9204
19990 lb GR
042505 1626 9204 0019990

BagNum	MANIFEST GROSS WEIGHT
9205	19600

Shipment Survey

Survey Number: GTEOSI-04-10520 Date: 12.14.04 Time: 1032

Waste Container Type: Super Sack Intermodal Other: soil

Waste Container ID #: 9205 Storage Bin: 38L Gross Weight: 19600 lbs

	Ludlum 3030		Ludlum 3030		Ludlum 3030		Ludlum 19
Serial #	190641		191265		N		193615
Probe #	N/A		N/A				N/A
Calibration Due Date:	3-4-05		4-20-05			A	5-19-05
	α	β	α	β	α	β	
Background	0 cpm	25 cpm	0 cpm	25 cpm	N cpm	cpm	6 μR/hr
Efficiency	29 %	25 %	29 %	25 %	%	%	
MDA	25 dpm	130 dpm	25 dpm	130 dpm	dpm	A dpm	

Maximum Contact Dose Rate: .008 mrem/hr Transport Index: 0 mrem/hr

	α cpm	α dpm/100 cm2	β cpm	β dpm/100 cm2
ALARA Limit	N/A	60	N/A	500
Smear #				
1	0	<MDA	29	<MDA
2	0		39	
3	0		24	
4	0		27	
5	0		33	
6	0		24	

Smear Locations: 1 - Bottom 2 - Front 3 - Right Side 4 - Back 5 - Left Side 6 - Top

DEBRA LePage — Debra LePage

Surveyor Name — Surveyor Signature

George Emmons

Supervisor Approval

23129-S-DRQ129205-05.0

Date: 12/14/04 Time:1759

1-06-05 14:19 Bag# 9205

19600 lb GR

010605 1419 9205 0019600

BagNum	MANIFEST GROSS WEIGHT
9202	20290

Shipment Survey

Survey Number: GTEOSI-04 - 10518 Date: 12-13-04 Time: 1550

Waste Container Type: Super Sack Intermodal Other: soil

Waste Container ID #: 9202 Storage Bin: 39' L Gross Weight: 20290 lbs

	Ludlum 3030		Ludlum 3030		Ludlum 3030		Ludlum 19
Serial #	190641		191265		N		193615
Probe #	N/A		N/A				N/A
Calibration Due Date:	3-4-05		4-20-05			A	5-19-05
	α	β	α	β	α	β	
Background	0 cpm	25 cpm	0 cpm	25 cpm	N cpm	cpm	6 μR/hr
Efficiency	29 %	25 %	29 %	25 %	%	%	
MDA	25 dpm	130 dpm	25 dpm	130 dpm	dpm	A dpm	

Maximum Contact Dose Rate: .008 mrem/hr Transport Index: 0 mrem/hr

	α cpm	α dpm/100 cm2	β cpm	β dpm/100 cm2
ALARA Limit	N/A	60	N/A	500
Smear #				
1	0	<MDA	25	<MDA
2	0		34	
3	1		33	
4	0		24	
5	0		20	
6	1		39	

Smear Locations: 1 - Bottom 2 - Front 3 - Right Side 4 - Back 5 - Left Side 6 - Top

DEBRA LEPage — Debra L Page

Surveyor Name — Surveyor Signature

George Economos

Supervisor Approval

23115-S-DRQ129202-05.0

Date: 12/14/04 Time:1717

1-06-05 15:59 Bag# 9202

20290 lb GR

010605 1559 9202 0020290

BagNum	MANIFEST GROSS WEIGHT
9219	13390

Shipment Survey

Survey Number: FTEOSI-05-00318 Date: 2-21-05 Time: 1105

Waste Container Type: Super Sack Intermodal Other: WASTE

Waste Container ID #: 9219 Storage Bin: 38 Gross Weight: 13390 lbs

	Ludlum 3030		Ludlum 3030		Ludlum 3030		L-19
Serial #	190646		196165		N		196117
Probe #	N/A		N/A				N/A
Calibration Due Date:	12-13-05		7-18-05				8-10-05
	α	β	α	β	α	β	
Background	0 cpm	25 cpm	0 cpm	25 cpm	cpm	cpm	5 μR/hr
Efficiency	29 %	25 %	29 %	25 %	%	%	
MDA	25 dpm	130 dpm	25 dpm	130 dpm	dpm	A dpm	

Maximum Contact Dose Rate: .006 mrem/hr Transport Index: 0 mrem/hr

	α cpm	α dpm/100 cm2	β cpm	β dpm/100 cm2
ALARA Limit	N/A	60	N/A	500
Smear #				
1	2	<MDA	31	<MDA
2	0		29	
3	0		26	
4	0		32	
5	0		22	
6	0		29	

Smear Locations: 1 - Bottom 2 - Front 3 - Right Side 4 - Back 5 - Left Side 6 - Top

JOHN MITCHELL SR
Surveyor Name

John Mitchell Sr
Surveyor Signature

Supervisor Approval

25959-S-GC18A9219-99.9
Date: 02/09/05 Time:1529

2-21-05 11:55 Bag# 9219
13390 lb GR
022105 1155 9219 0013390

BagNum	MANIFEST GROSS WEIGHT
9211	14380

Shipm Survey

Survey Number: GTEOSI-05-00309 Date: 1-26-05 Time: 1045

Waste Container Type: Super Sack Intermodal Other: WASTE

Waste Container ID #: 9211 Storage Bin: 41 Gross Weight: 14380 lbs

	Ludlum 3030		Ludlum 3030		Ludlum 3030		L-19
Serial #	190646		191265				193615
Probe #	N/A		N/A		N/A		N/A
Calibration Due Date:	12-13-05		4-20-05				5-19-05
	α	β	α	β	α	β	
Background	0 cpm	25 cpm	0 cpm	25 cpm	cpm	cpm	5 μR/hr
Efficiency	29 %	25 %	29 %	25 %	%	N/A %	
MDA	25 dpm	130 dpm	25 dpm	130 dpm	dpm	dpm	

Maximum Contact Dose Rate: .008 mrem/hr Transport Index: ~~.01~~ 0 mrem/hr
gma 1-26-05

	α cpm	α dpm/100 cm2	β cpm	β dpm/100 cm2
ALARA Limit	N/A	60	N/A	500
Smear #				
1	0	<MDA	30	<MDA
2	0		23	
3	1		30	
4	0		38	
5	0		16	
6	0		28	

Smear Locations: 1 - Bottom 2 - Front 3 - Right Side 4 - Back 5 - Left Side 6 - Top

JOHN MITCHELL, SR
Surveyor Name

John Mitchell, Sr.
Surveyor Signature

Supervisor Approval

24656-S-SHEET9211-99.9
Date: 01/20/05 Time:1205

1-25-05 12:07 Bag# 9211
14380 lb GR
012505 1207 9211 0014380

BagNum	MANIFEST GROSS WEIGHT
9208	16540

Shipment Survey

Survey Number: GTEOSI-05-00317 Date: 2-21-05 Time: 1125

Waste Container Type: (Super Sack) Intermodal Other: WASTE

Waste Container ID #: 9208 Storage Bin: 40 Gross Weight: 16540 lbs

	Ludlum 3030		Ludlum 3030		Ludlum 3030		L-19
Serial #	190646		196165		N		196117
Probe #	N/A		N/A				N/A
Calibration Due Date:	12-13-05		7-18-05			A	8-10-05
	α	β	α	β	α	β	
Background	0 cpm	25 cpm	0 cpm	25 cpm	N cpm	cpm	5 μR/hr
Efficiency	29 %	25 %	29 %	25 %	%	%	
MDA	25 dpm	130 dpm	25 dpm	130 dpm	dpm	A dpm	

Maximum Contact Dose Rate: .007 mrem/hr Transport Index: 0 mrem/hr

	α cpm	α dpm/100 cm2	β cpm	β dpm/100 cm2
ALARA Limit	N/A	60	N/A	500
Smear #				
1	0	<MDA	34	<MDA
2	0		28	
3	0		22	
4	0		30	
5	0		36	
6	0		24	

Smear Locations: 1 - Bottom 2 - Front 3 - Right Side 4 - Back 5 - Left Side 6 - Top

JOHN MITCHELL, SR
Surveyor Name

John Mitchell, Sr.
Surveyor Signature

Supervisor Approval

24748-S-04U179208-99.9
Date: 01/21/05 Time:1311

2-21-05 12:20 Bag# 9208
16540 lb GR
022105 1220 9208 0016540

BagNum	MANIFEST GROSS WEIGHT
9206	19650

Shipm Survey

Survey Number: GTEOSI-05-00315 Date: 1-27-05 Time: 13:55

Waste Container Type: Super Sack Intermodal Other: Waste

Waste Container ID #: 9206 Storage Bin: 39-C Gross Weight: 19650 lbs

	Ludlum 3030		Ludlum 3030		Ludlum 3030		Ludlum Mod. 19
Serial #	190646		191265				193615
Probe #	N/A		N/A		N/A		N/A
Calibration Due Date:	12-13-05		4-20-05				19 May 05
	α	β	α	β	α	β	
Background	0 cpm	25 cpm	0 cpm	25 cpm	cpm	cpm	5 μR/hr
Efficiency	29 %	25 %	29 %	25 %	%	N/A %	
MDA	25 dpm	130 dpm	25 dpm	130 dpm	dpm	dpm	

Maximum Contact Dose Rate: 0.006 mrem/hr Transport Index: 0.0 mrem/hr

	α cpm	α dpm/100 cm2	β cpm	β dpm/100 cm2
ALARA Limit	N/A	60	N/A	600
Smear #				
1	0	LMDA	23	LMDA
2	0		28	
3	1		35	
4	0		27	
5	0		30	
6	0	LMDA	31	LMDA

Smear Locations: 1 - Bottom 2 - Front 3 - Right Side 4 - Back 5 - Left Side 6 - Top

George Economos — Surveyor Name

George Economos — Surveyor Signature

Supervisor Approval

24832-S-040199206-99.9
Date: 01/26/05 Time:0848

1-27-05 14:50 Bag# 9206
19650 lb GR
012705 1450 9206 0019650

BagNum	MANIFEST GROSS WEIGHT
9171	20440

Shipment Survey

Survey Number: GTEOSI-05-00305 Date: 1-20-05 Time: 14:30

Waste Container Type: Super Sack Intermodal Other: Soil

Waste Container ID #: ~~9182~~ 1-20-05 9171 Storage Bin: 38C Gross Weight: 20440 lbs

	Ludlum 3030		Ludlum 3030		Ludlum 3030		Ludlum 19
Serial #	190646		191265		N/A		180299
Probe #	N/A		N/A				N/A
Calibration Due Date:	12-13-05		4-20-05				22 Apr 05
	α	β	α	β	α	β	
Background	0 cpm	25 cpm	0 cpm	25 cpm	cpm	cpm	5 μR/hr
Efficiency	29 %	25 %	29 %	25 %	N/A	%	
MDA	25 dpm	130 dpm	25 dpm	130 dpm	dpm	dpm	

Maximum Contact Dose Rate: 0.007 mrem/hr Transport Index: 0 mrem/hr

	α cpm	α dpm/100 cm2	β cpm	β dpm/100 cm2
ALARA Limit	N/A	60	N/A	500
Smear #				
1	0	<MDA	24	<MDA
2	0		32	
3	0		21	
4	0		28	
5	0		34	
6	0	<MDA	32	<MDA

Smear Locations: 1 - Bottom 2 - Front 3 - Right Side 4 - Back 5 - Left Side 6 - Top

GEORGE ECONOMOS — George Economos

Surveyor Name — Surveyor Signature

Supervisor Approval

23998-S-J02XX9171-99.9

Date: 01/11/05 Time:1510

1-20-05 15:48 Bag# 9171

20440 lb GR

012005 1548 9171 0020440

ENVIROCARE *OF UTAH, LLC.*

THE SAFE ALTERNATIVE

CERTIFICATE OF DISPOSAL

GTE Operations Support Inc., Irving

This Certificate acknowledges that the following manifested shipments:

Shipment	Disposal Location	Date	Shipment	Disposal Location	Date
0840-01-0978	Class A	06/08/05 10:48:04	0840-01-0979	Class A	06/08/05 10:48:04
0840-01-0980	Class A	06/08/05 10:48:04			

Representing 4,589.40 cubic feet of waste has been disposed of at the above listed Disposal Facility. Disposal is subject to Envirocare's Radioactive Material License, all other applicable licenses, permits and regulations, and the Disposal Agreement.

Brent Anderson
Director of LLRW Operations

6/9/05
Date

605 N. 5600 W, Salt Lake City, Utah 84116 Telephone (801) 532-1330

Attachment 5.15
RAILCAR INSPECTION FORM

Shipment Number	Carrier	Railcar Number
0840-01-978	New York + Atlantic / LIRR	MHFX 5213

Item	SAT	UNSAT	Criteria	Comments
Coupler	☑	☐	Hardware intact, no cracks or broken welds, latching mechanism works properly, no loose or damaged parts	
Suspension	☑	☐	Hardware intact, no visible cracks or broken welds, coil springs seated and intact, inner and outer bearings intact and seated properly	
Wheel & Axle Assembly	☑	☐	Overall condition, no cracks or damaged areas on wheel surfaces, hubs centered, bolting intact, rims not bent or cracked	
Frame & Undercarriage	☑	☐	Main beams straight and centered, no major bends or damage, welds intact, no cracks	
Floors & Walls (Gondola, Boxcar)	☑	☐	No damage with open holes, punch throughs, ect. No rust damage, seams and welds intact, no rotting or other material problems, structurally sound	
Attachment Points or Tie Downs	☑	☐	Tie down hardware straight and intact, no cracks on or around attachment hardware, mechanical clips or latches operable and complete	
Doors (Boxcar Only)	☑	☐	Can be closed and secured properly, lubricated properly, rollers and tracks in operable condition, no loose or missing hardware, sealing surfaces intact and seals in serviceable condition	
Seals and Gasket	☑	☐	Seal Flanges intact with no dents or bends that affect sealing capability, gaskets pliable and in serviceable condition, no torn or missing areas, gasket appropriate to meet sealing requirements	
Seams (Gondola, Boxcar)	☑	☐	Seams intact, welds visibly sufficient, all corners and mating interfaces caulked and sealed properly	
Drains	☑	☐	Drains plugged or sealed properly, verify threaded plugs are tack welded or otherwise disabled, all other holes closed and sealed	
Brakes	☑	☐	Visibly inspect brake shoes, minimum 1" contact surface on all shoes, hoses and piping (tubing) mechanically sound, no missing or loose hardware, valves operate freely, no kinks or obstructions in piping or hoses	
Paint and Lettering	☑	☐	Overall good condition of exterior surfaces, identification numbering legible and intact, areas for placards or labels intact and structurally sound (Wood or metal panels)	
Bracing	☑	☐	Bracing and shoring must be sufficient to prevent shifting of lading during conditions normally incident to transportation	

MHF-LS Qualified Technician Signature _____

Shipment Date 5-11-05

Attachment 5.10
TRANSPORT VEHICLE RELEASE CHECKLIST

Shipment Number- 0840-01-978

Truck Number- 38 - R404

Trailer Number- 225-226

A qualified MHF-LS shipping technician shall verify that each item listed is satisfactory and then place a Check Mark in the corresponding box.

1. Driver possesses a valid driver's license with a HAZMAT endorsement ☑
2. Driver possesses a valid copy of a "Research and Special Programs Administration" U.S. DOT Hazmat Registration Certificate ☑
3. If manifested on a Hazardous Waste Manifest, ensure the carrier possesses a current EPA ID # ☐
4. Lamps are operable ☑
   - Headlights and Brights
   - Warning Lights and Flashers
   - Brake Lights
5. Coupling devices are intact ☑
6. Tires are sufficient ☑
   - No fabric is exposed through tread or sidewall
   - Front wheel tires must have tread pattern to a depth of ≥1/8 inch
   - Other tires must have tread pattern to a depth of ≥1/16 inch
   - Re-treaded tires are not authorized
7. Horn is operable ☑
8. Windshield wipers are operable ☑
9. Rear-vision mirrors are adequate (1 on each side) ☑
10. Emergency equipment is on-hand and accessible ☑
    - Fire extinguisher
    - Warning devices- bi-directional emergency reflectors, triangles (3), or liquid burning flares
11. General vehicle integrity is satisfactory ☑
    - Frame appears undamaged
    - Flooring is sufficient to support load
    - If a closed transport vehicle, vehicle is closed
    - Vehicle is otherwise in unimpaired physical condition
12. Vehicle truck and trailer have current DOT inspection stickers on both components (Good for 1 year from date performed) ☑
13. Vehicle is properly placarded (Exclusive Use LSA, Yellow III and HRCQ only) ☑
14. Shoring, strapping, blocking and bracing is adequate to prevent shifting of lading ☑

MHF-LS Qualified Technician Signature [signature]
Shipment Date 5-11-05

Attachment 5.9
LOADING DIAGRAM

A qualified MHF-LS shipper shall complete the following diagram by writing the package number and corresponding weight at the approximate position in which it is placed. The space to the left of the diagram may be used for additional or explanatory information as necessary.

Shipment Number- 0840-01-978

Front

9211
14,380-lbs

9190
17380-lbs

Rear

MHF-LS Qualified Technician
Signature_____
Shipment Date_____

Attachment 5.9
LOADING DIAGRAM

A qualified MHF-LS shipper shall complete the following diagram by writing the package number and corresponding weight at the approximate position in which it is placed. The space to the left of the diagram may be used for additional or explanatory information as necessary.

Shipment Number- 0840-01-978

Front

9219
13390-lbs

9200
20330-lbs

Rear

MHF-LS Qualified Technician
Signature_____
Shipment Date_____

Attachment 5.9
LOADING DIAGRAM

A qualified MHF-LS shipper shall complete the following diagram by writing the package number and corresponding weight at the approximate position in which it is placed. The space to the left of the diagram may be used for additional or explanatory information as necessary.

Shipment Number- 0840-01-978

Front

9171
20440-lbs

9204
19,990-lbs

Rear

MHF-LS Qualified Technician
Signature_____
Shipment Date_____

Attachment 5.9
LOADING DIAGRAM

A qualified MHF-LS shipper shall complete the following diagram by writing the package number and corresponding weight at the approximate position in which it is placed. The space to the left of the diagram may be used for additional or explanatory information as necessary.

Shipment Number- 0840-01-978

Front

9205
19600-lbs

9208
16540-lbs

Rear

MHF-LS Qualified Technician
Signature _____
Shipment Date _____

Attachment 5.9
LOADING DIAGRAM

A qualified MHF-LS shipper shall complete the following diagram by writing the package number and corresponding weight at the approximate position in which it is placed. The space to the left of the diagram may be used for additional or explanatory information as necessary.

Shipment Number- 0840-01-928

Front

9202
20290-lbs

9206
19650-lbs

Rear

MHF-LS Qualified Technician
Signature_____
Shipment Date_____

Attachment 5.9
LOADING DIAGRAM

A qualified MHF-LS shipper shall complete the following diagram by writing the package number and corresponding weight at the approximate position in which it is placed. The space to the left of the diagram may be used for additional or explanatory information as necessary.

Shipment Number- 0840-01-978

Front

9191
17730-165

Rear

MHF-LS Qualified Technician
Signature_____
Shipment Date_____

Straight Bill of Lading

Shipper MHF-LS For GTE Operations Support Incorporated
140 Contiague Rock Road
Hicksville, NY 11369

Date: 5/11/2005

Consigned to MHF-LS @ New York-Atlantic Rail Spur
Hicksville, NY 11369

Load in Gondola # MHFX 5213

Emergency Contact: CHEMTREC 800-424-9300

TR:

Quantity	Description		Net Waste Weight
2	Soil, DOT Non-Regulated Waste, Containing		
	Radioactive Materials.		
	Package ID Number		**Pounds:**
	Liner	9171	20440
	Liner	9204	19990
			Total:
			40430
	Packages do not meet the DOT "radioactive material"		
	definition in 49 CFR 173.403.		
	JB 5/12/05		
	Radionuclide: Ac-227,Th-227,~~U238~~, Th232, Th230,Pa-231,Ra-223		
	Ra-226,Ra-228,Th-228,U-234,U-nat,		
	Total Activity: 9.08 MBq		
	Physical Form: Solid		
	Chemical Form: Metal Oxide		

GENERATOR CERTIFICATION: I hereby certify and declare that the contents of this consignment are fully and accurately described above by proper shipping name and are classified, packed, marked, and labeled, and are in all respects in proper condition for transport by highway according to applicable international and national government regulations.

Printed/Typed Name	Signature		Date
Rob mIIIer for MHFLS at GTEOSI			5/11/2005
Transporter	Signature		Date
Priority Transport			5/11/2005

Straight Bill of Lading

Shipper	MHF-LS For GTE Operations Support Incorporated 140 Contiague Rock Road Hicksville, NY 11369	Date: 5/11/2005
Consigned to	MHF-LS @ New York-Atlantic Rail Spur Hicksville, NY 11369	Load in Gondola # MHFX
Emergency Contact:	CHEMTREC 800-424-9300	5213

Total All Trucks
199720

TR: TL:

Quantity	Description		Net Waste Weight
2	Soil, DOT Non-Regulated Waste, Containing		
	Radioactive Materials.		
	Package ID Number		**Pounds:**
	Liner	9211	14380
	Liner	9190	17380
			Total:
			31760
	Packages do not meet the DOT "radioactive material"		
	definition in 49 CFR 173.403.		
	05/12/05		
	Radionuclide: Ac-227,Th-227,~~U238,~~ Th232, Th230,Pa-231,Ra-223		
	Ra-226,Ra-228,Th-228,U-234,U-nat,		
	Total Activity: 5.2133 MBq		
	Physical Form: Solid		
	Chemical Form: Metal Oxide		

GENERATOR CERTIFICATION: I hereby certify and declare that the contents of this consignment are fully and accurately described above by proper shipping name and are classified, packed, marked, and labeled, and are in all respects in proper condition for transport by highway according to applicable international and national government regulations

Printed/Typed Name	Signature		Date
Rob miller for MHFLS at GTEOSI			5/11/2005
Transporter	Signature		Date
Priority Transport			5/11/2005

Straight Bill of Lading

Shipper	MHF-LS For GTE Operations Support Incorporated 140 Contiague Rock Road Hicksville, NY 11369	Date: 5/11/2005
Consigned to	MHF-LS @ New York-Atlantic Rail Spur Hicksville, NY 11369	Load in Gondola # MHFX
Emergency Contact:	CHEMTREC 800-424-9300	5213

TR: TL:

Quantity	Description		Net Waste Weight
2	Soil, DOT Non-Regulated Waste, Containing		
	Radioactive Materials.		
	Package ID Number		**Pounds:**
	Liner	9219	13390
	Liner	9200	20330
			Total:
			33720
	Packages do not meet the DOT "radioactive material"		
	definition in 49 CFR 173.403.		
	1205/2105		
	Radionuclide: Ac-227,Th-227,~~U238,~~ Th232, Th230,Pa-231,Ra-223		
	Ra-226,Ra-228,Th-228,U-234,U-nat,		
	Total Activity: 11.2 MBq		
	Physical Form: Solid		
	Chemical Form: Metal Oxide		

GENERATOR CERTIFICATION: I hereby certify and declare that the contents of this consignment are fully and accurately described above by proper shipping name and are classified, packed, marked, and labeled, and are in all respects in proper condition for transport by highway according to applicable international and national government regulations.

Printed/Typed Name	Signature		Date
Rob mIIIer for MHFLS at GTEOSI			5/11/2005
Transporter	Signature		Date
Priority Transport	Colburn Sherwood Jr.		5/11/2005

Straight Bill of Lading

Shipper MHF-LS For GTE Operations Support Incorporated
140 Contiague Rock Road
Hicksville, NY 11369

Date: 5/11/2005

Consigned to MHF-LS @ New York-Atlantic Rail Spur
Hicksville, NY 11369

Load in Gondola # MHFX 5213

Emergency Contact: CHEMTREC 800-424-9300

TR: TL:

Quantity	Description		Net Waste Weight
2	Soil, DOT Non-Regulated Waste, Containing		
	Radioactive Materials.		
	Package ID Number		**Pounds:**
	Liner	9202	20290
	Liner	9206	19650
			Total:
			39940
	Packages do not meet the DOT "radioactive material"		
	definition in 49 CFR 173.403.		
	JR 5/12/05		
	Radionuclide: Ac-227,Th-227,~~U238,~~ Th232, Th230,Pa-231,Ra-223		
	Ra-226,Ra-228,Th-228,U-234,U-nat,		
	Total Activity: 6.8336 MBq		
	Physical Form: Solid		
	Chemical Form: Metal Oxide		

GENERATOR CERTIFICATION: I hereby certify and declare that the contents of this consignment are fully and accurately described above by proper shipping name and are classified, packed, marked, and labeled, and are in all respects in proper condition for transport by highway according to applicable international and national government regulations.

Printed/Typed Name	Signature		Date
Rob mIller for MHFLS at GTEOSI			5/11/2005
Transporter	Signature		Date
Priority Transport			5/11/2005

Straight Bill of Lading

Shipper MHF-LS For GTE Operations Support Incorporated
140 Contiague Rock Road
Hicksville, NY 11369

Date: 5/11/2005

Consigned to MHF-LS @ New York-Atlantic Rail Spur
Hicksville, NY 11369

Load in Gondola # MHFX 5213

Emergency Contact: CHEMTREC 800-424-9300

TR: TL:

Quantity	Description		Net Waste Weight
2	Soil, DOT Non-Regulated Waste, Containing		
	Radioactive Materials.		
	Package ID Number		**Pounds:**
	Liner	9205	19600
	Liner	9208	16540
			Total:
			36140
	Packages do not meet the DOT "radioactive material"		
	definition in 49 CFR 173.403.		
	JB 5/12/05		
	Radionuclide: Ac-227,Th-227,~~U238,~~ Th232, Th230,Pa-231,Ra-223		
	Ra-226,Ra-228,Th-228,U-234,U-nat,		
	Total Activity: 7.0126 MBq		
	Physical Form: Solid		
	Chemical Form: Metal Oxide		

GENERATOR CERTIFICATION: I hereby certify and declare that the contents of this consignment are fully and accurately described above by proper shipping name and are classified, packed, marked, and labeled, and are in all respects in proper condition for transport by highway according to applicable international and national government regulations.

Printed/Typed Name	Signature		Date
Rob mIller for MHFLS at GTEOSI			5/11/2005
Transporter	Signature		Date
Priority Transport			5/11/2005

Straight Bill of Lading

Shipper	MHF-LS For GTE Operations Support Incorporated 140 Contiague Rock Road Hicksville, NY 11369	Date: 5/11/2005
Consigned to	MHF-LS @ New York-Atlantic Rail Spur Hicksville, NY 11369	Load in Gondola # MHFX
Emergency Contact:	CHEMTREC 800-424-9300	5213

TR: TL:

Quantity	Description		Net Waste Weight
1	Soil, DOT Non-Regulated Waste, Containing		
	Radioactive Materials.		
	Package ID Number		**Pounds:**
	Liner	9191	17730
	Liner		
			Total:
			17730
	Packages do not meet the DOT "radioactive material"		
	definition in 49 CFR 173.403.		
	JB 5/12/05		
	Radionuclide: Ac-227,Th-227,~~U238,~~ Th232, Th230,Pa-231,Ra-223		
	Ra-226,Ra-228,Th-228,U-234,U-nat,		
	Total Activity: 1.0084 MBq		
	Physical Form: Solid		
	Chemical Form: Metal Oxide		

GENERATOR CERTIFICATION: I hereby certify and declare that the contents of this consignment are fully and accurately described above by proper shipping name and are classified, packed, marked, and labeled, and are in all respects in proper condition for transport by highway according to applicable international and national government regulations.

Printed/Typed Name	Signature		Date
Rob mIller for MHFLS at GTEOSI			5/11/2005
Transporter	Signature		Date
Priority Transport	Columbus Shendon		5/11/2005

MHFX	Shipment #		0											
on-site	new	Bag #		9211	9190	9219	9200	9171	9204	9205	9208	9202	9206	9191	qa check
[redacted]	Storage Loc.			14380	17380	13390	20330	20440	19990	19600	16540	20290	19650	17730	[redacted]
5213	0840-01-978		203200	[redacted]											

container #
9191

shipping check sheet (For Form 540)

	Ac-227		corrected	activity mBq	activity mCi	activity Ci	SNM	source	
		6.222E-002	6.222E-002	1.8447E-02	4.9858E-04	4.9858E-07	grams	kg	
grams			pCi/g				6.9247E-09	6.9247E-12	
8013100		7.2000E+01							
	Pa-231			activity mBq	activity mCi	activity Ci	SNM	source	
17650		1.567E-001	1.567E-001	4.6459E-02	1.2557E-03	1.2557E-06	grams	kg	
grams							2.6716E-05	2.6716E-08	
8013100		4.7000E-02							
	Ra-223			activity mBq	activity mCi	activity Ci	SNM	source	
17650		5.702E-002	5.702E-002	1.6906E-02	4.5691E-04	4.5691E-07	grams	kg	
grams							8.9590E-12	8.9590E-15	
8013100		5.1000E+04							
	Ra-226			activity mBq	activity mCi	activity Ci	SNM	source	
17650		2.218E-001	1.6103E-01	4.7742E-02	1.2903E-03	1.2903E-06	grams	kg	1.37741
grams							1.2903E-06	1.2903E-09	
8013100		1.0000E+00							
	Ra228			activity mBq	activity mCi	activity Ci	SNM	source	
17650		2.152E-001	3.0525E-01	9.0501E-02	2.4460E-03	2.4460E-06	grams	kg	0.705
grams							9.0592E-09	9.0592E-12	
8013100		2.7000E+02							
	TH-227			activity mBq	activity mCi	activity Ci	SNM	source	
17650		6.222E-002	6.222E-002	1.8447E-02	4.9858E-04	4.9858E-07	grams	kg	
grams							1.6083E-11	1.6083E-14	
8013100		3.1000E+04							
	Th-228			activity mBq	activity mCi	activity Ci	SNM	source	
17650		1.954E-001	3.5289E-01	1.0463E-01	2.8278E-03	2.8278E-06	grams	kg	
grams							3.4485E-09	3.4485E-12	0.55371
8013100		8.2000E+02							
	Th-230			activity mBq	activity mCi	activity Ci	SNM	source	
17650		2.152E-001	1.5968E-01	4.7342E-02	1.2795E-03	1.2795E-06	grams	kg	
grams							6.0929E-05	6.0929E-08	1.34771
8013100		2.1000E-02							
	TH-232			activity mBq	activity mCi	activity Ci	SNM	source	
17650		2.152E-001	3.0525E-01	9.0501E-02	2.4460E-03	2.4460E-06	grams	kg	0.705
grams							2.2236E+01	2.2236E-02	
8013100		1.1000E-07							
	U-234			activity mBq	activity mCi	activity Ci	SNM	source	
17650		6.867E-001	6.0979E-01	1.8079E-01	4.8863E-03	4.8863E-06	grams	kg	1.12613
grams							7.8811E-04	7.8811E-07	
8013100		6.2000E-03							
	U-235			activity mBq	activity mCi	activity Ci	SNM	source	
17650		1.893E-001	2.4238E-01	7.1862E-02	1.9422E-03	1.9422E-06	grams	kg	0.781
grams							8.8283E-01	8.8283E-04	
8013100		2.2000E-06							
	U-238			activity mBq	activity mCi	activity Ci	SNM	source	
17650		6.867E-001	9.2672E-01	2.7476E-01	7.4259E-03	7.4259E-06	grams	kg	0.741
grams							2.1841E+01	2.1841E-02	
8013100		3.4000E-07							

Totals for all flag 1 data

			corrected	activity mBq	activity mCi	activity Ci	SNM	source	
17650		2.9637E+00	3.3389E+00	1.0084E+00	2.7254E-02	2.7254E-05	grams	kg	flag1 data
			pCi/g	541 will be < than the 540 (MDA not added)			8.8283E-01	4.4078E-02	
140.0793651				data for NORM					
	U-nat		corrected pCi/g	activity mBq	activity mCi	activity Ci		source	
		8.7600E-01	1.1691E+00	3.4662E-01	9.3681E-03	9.3681E-06		kg	
								1.3195E-02	
		7.1000E-07							

	U-nat		corrected pCi/g	activity mBq	activity mCi	activity Ci		source	
		2.9637E+00	3.3389E+00	1.0084E+00	2.7254E-02	2.7254E-05		kg total	norm data
								3.5432E-02	

container #
9206

shipping check sheet (For Form 540)

	Ac-227		corrected	activity mBq	activity mCi	activity Ci	SNM	source	
		4.574E-002	4.574E-002	1.5036E-02	4.0639E-04	4.0639E-07	grams	kg	
grams			pCi/g				5.6443E-09	5.6443E-12	
8884780		7.2000E+01							
	Pa-231			activity mBq	activity mCi	activity Ci	SNM	source	
19570		1.484E-001	1.484E-001	4.8785E-02	1.3185E-03	1.3185E-06	grams	kg	
grams							2.8053E-05	2.8053E-08	
8884780		4.7000E-02							
	Ra-223			activity mBq	activity mCi	activity Ci	SNM	source	
19570		2.780E-002	2.780E-002	9.1389E-03	2.4700E-04	2.4700E-07	grams	kg	
grams							4.8431E-12	4.8431E-15	
8884780		5.1000E+04							
	Ra-226			activity mBq	activity mCi	activity Ci	SNM	source	
19570		1.787E-001	1.2974E-01	4.2649E-02	1.1527E-03	1.1527E-06	grams	kg	1.37741
grams							1.1527E-06	1.1527E-09	
8884780		1.0000E+00							
	Ra228			activity mBq	activity mCi	activity Ci	SNM	source	
19570		2.451E-001	3.4766E-01	1.1429E-01	3.0889E-03	3.0889E-06	grams	kg	0.705
grams							1.1440E-08	1.1440E-11	
8884780		2.7000E+02							
	TH-227			activity mBq	activity mCi	activity Ci	SNM	source	
19570		4.574E-002	4.574E-002	1.5036E-02	4.0639E-04	4.0639E-07	grams	kg	
grams							1.3109E-11	1.3109E-14	
8884780		3.1000E+04							
	Th-228			activity mBq	activity mCi	activity Ci	SNM	source	
19570		2.619E-001	4.7299E-01	1.5549E-01	4.2024E-03	4.2024E-06	grams	kg	
grams							5.1249E-09	5.1249E-12	0.55371
8884780		8.2000E+02							
	Th-230			activity mBq	activity mCi	activity Ci	SNM	source	
19570		2.451E-001	1.8186E-01	5.9785E-02	1.6158E-03	1.6158E-06	grams	kg	
grams							7.6944E-05	7.6944E-08	1.34771
8884780		2.1000E-02							
	TH-232			activity mBq	activity mCi	activity Ci	SNM	source	
19570		2.451E-001	3.4766E-01	1.1429E-01	3.0889E-03	3.0889E-06	grams	kg	0.705
grams							2.8081E+01	2.8081E-02	
8884780		1.1000E-07							
	U-234			activity mBq	activity mCi	activity Ci	SNM	source	
19570		1.025E+000	9.1020E-01	2.9922E-01	8.0869E-03	8.0869E-06	grams	kg	1.12613
grams							1.3043E-03	1.3043E-06	
8884780		6.2000E-03							
	U-235			activity mBq	activity mCi	activity Ci	SNM	source	
19570		1.699E-001	2.1754E-01	7.1514E-02	1.9328E-03	1.9328E-06	grams	kg	0.781
grams							8.7855E-01	8.7855E-04	
8884780		2.2000E-06							
	U-238			activity mBq	activity mCi	activity Ci	SNM	source	
19570		1.025E+000	1.3833E+00	4.5473E-01	1.2290E-02	1.2290E-05	grams	kg	0.741
grams							3.6147E+01	3.6147E-02	
8884780		3.4000E-07							

Totals for all flag 1 data

			corrected	activity mBq	activity mCi	activity Ci	SNM	source	
19570		3.6635E+00	4.2129E+00	1.4000E+00	3.7837E-02	3.7837E-05	grams	kg	flag1 data
			pCi/g	541 will be < than the 540 (MDA not added)			8.7855E-01	6.4229E-02	
155.3174603				data for NORM					
	U-nat		corrected pCi/g	activity mBq	activity mCi	activity Ci		source	
		1.1949E+00	1.6008E+00	5.2624E-01	1.4223E-02	1.4223E-05		kg	
								2.0032E-02	
		7.1000E-07							

	U-nat		corrected pCi/g	activity mBq	activity mCi	activity Ci		source	
		3.6635E+00	4.2129E+00	1.4000E+00	3.7837E-02	3.7837E-05		kg total	norm data
								4.8114E-02	

container #
9202

shipping check sheet (For Form 540)

	Ac-227		corrected	activity mBq	activity mCi	activity Ci	SNM	source	
		5.336E-002	5.336E-002	1.8115E-02	4.8960E-04	4.8960E-07	grams	kg	
grams			pCi/g				6.7999E-09	6.7999E-12	
9175340		7.2000E+01							
	Pa-231			activity mBq	activity mCi	activity Ci	SNM	source	
20210		1.707E-001	1.707E-001	5.7951E-02	1.5662E-03	1.5662E-06	grams	kg	
grams							3.3324E-05	3.3324E-08	
9175340		4.7000E-02							
	Ra-223			activity mBq	activity mCi	activity Ci	SNM	source	
20210		5.178E-002	5.178E-002	1.7579E-02	4.7510E-04	4.7510E-07	grams	kg	
grams							9.3157E-12	9.3157E-15	
9175340		5.1000E+04							
	Ra-226			activity mBq	activity mCi	activity Ci	SNM	source	
20210		2.532E-001	1.8382E-01	6.2406E-02	1.6866E-03	1.6866E-06	grams	kg	1.37741
grams							1.6866E-06	1.6866E-09	
9175340		1.0000E+00							
	Ra228			activity mBq	activity mCi	activity Ci	SNM	source	
20210		5.344E-001	7.5801E-01	2.5734E-01	6.9550E-03	6.9550E-06	grams	kg	0.705
grams							2.5759E-08	2.5759E-11	
9175340		2.7000E+02							
	TH-227			activity mBq	activity mCi	activity Ci	SNM	source	
20210		5.336E-002	5.336E-002	1.8115E-02	4.8960E-04	4.8960E-07	grams	kg	
grams							1.5793E-11	1.5793E-14	
9175340		3.1000E+04							
	Th-228			activity mBq	activity mCi	activity Ci	SNM	source	
20210		5.488E-001	9.9113E-01	3.3648E-01	9.0940E-03	9.0940E-06	grams	kg	
grams							1.1090E-08	1.1090E-11	0.55371
9175340		8.2000E+02							
	Th-230			activity mBq	activity mCi	activity Ci	SNM	source	
20210		5.344E-001	3.9652E-01	1.3462E-01	3.6382E-03	3.6382E-06	grams	kg	
grams							1.7325E-04	1.7325E-07	1.34771
9175340		2.1000E-02							
	TH-232			activity mBq	activity mCi	activity Ci	SNM	source	
20210		5.344E-001	7.5801E-01	2.5734E-01	6.9550E-03	6.9550E-06	grams	kg	0.705
grams							6.3228E+01	6.3228E-02	
9175340		1.1000E-07							
	U-234			activity mBq	activity mCi	activity Ci	SNM	source	
20210		5.391E+000	4.7872E+00	1.6252E+00	4.3924E-02	4.3924E-05	grams	kg	1.12613
grams							7.0845E-03	7.0845E-06	
9175340		6.2000E-03							
	U-235			activity mBq	activity mCi	activity Ci	SNM	source	
20210		4.109E-001	5.2612E-01	1.7861E-01	4.8273E-03	4.8273E-06	grams	kg	0.781
grams							2.1942E+00	2.1942E-03	
9175340		2.2000E-06							
	U-238			activity mBq	activity mCi	activity Ci	SNM	source	
20210		5.391E+000	7.2753E+00	2.4699E+00	6.6753E-02	6.6753E-05	grams	kg	0.741
grams							1.9633E+02	1.9633E-01	
9175340		3.4000E-07							

Totals for all flag 1 data

			corrected	activity mBq	activity mCi	activity Ci	SNM	source	
20210		1.3927E+01	1.5952E+01	5.4336E+00	1.4685E-01	1.4685E-04	grams	kg	flag1 data
			pCi/g	541 will be < than the 540 (MDA not added)			2.1942E+00	2.5957E-01	
160.3968254				data for NORM					
	U-nat		corrected pCi/g	activity mBq	activity mCi	activity Ci		source	
		5.8019E+00	7.8014E+00	2.6485E+00	7.1581E-02	7.1581E-05		kg	
								1.0082E-01	
		7.1000E-07							

	U-nat		corrected pCi/g	activity mBq	activity mCi	activity Ci		source	
		1.3927E+01	1.5952E+01	5.4336E+00	1.4685E-01	1.4685E-04		kg total	norm data
								1.6405E-01	

D

container #
9208

shipping check sheet (For Form 540)

	Ac-227		corrected	activity mBq	activity mCi	activity Ci	SNM	source	
		2.799E-002	2.799E-002	7.7391E-03	2.0916E-04	2.0916E-07	grams	kg	
grams			pCi/g				2.9051E-09	2.9051E-12	
7472840		7.2000E+01							
	Pa-231			activity mBq	activity mCi	activity Ci	SNM	source	
16460		1.673E-001	1.673E-001	4.6258E-02	1.2502E-03	1.2502E-06	grams	kg	
grams							2.6600E-05	2.6600E-08	
7472840		4.7000E-02							
	Ra-223			activity mBq	activity mCi	activity Ci	SNM	source	
16460		3.242E-002	3.242E-002	8.9640E-03	2.4227E-04	2.4227E-07	grams	kg	
grams							4.7504E-12	4.7504E-15	
7472840		5.1000E+04							
	Ra-226			activity mBq	activity mCi	activity Ci	SNM	source	
16460		2.814E-001	2.0430E-01	5.6487E-02	1.5267E-03	1.5267E-06	grams	kg	1.37741
grams							1.5267E-06	1.5267E-09	
7472840		1.0000E+00							
	Ra228			activity mBq	activity mCi	activity Ci	SNM	source	
16460		3.586E-001	5.0865E-01	1.4064E-01	3.8011E-03	3.8011E-06	grams	kg	0.705
grams							1.4078E-08	1.4078E-11	
7472840		2.7000E+02							
	TH-227			activity mBq	activity mCi	activity Ci	SNM	source	
16460		2.799E-002	2.799E-002	7.7391E-03	2.0916E-04	2.0916E-07	grams	kg	
grams							6.7473E-12	6.7473E-15	
7472840		3.1000E+04							
	Th-228			activity mBq	activity mCi	activity Ci	SNM	source	
16460		2.901E-001	5.2392E-01	1.4486E-01	3.9152E-03	3.9152E-06	grams	kg	
grams							4.7746E-09	4.7746E-12	0.55371
7472840		8.2000E+02							
	Th-230			activity mBq	activity mCi	activity Ci	SNM	source	
16460		3.586E-001	2.6606E-01	7.3570E-02	1.9884E-03	1.9884E-06	grams	kg	
grams							9.4685E-05	9.4685E-08	1.34771
7472840		2.1000E-02							
	TH-232			activity mBq	activity mCi	activity Ci	SNM	source	
16460		3.586E-001	5.0865E-01	1.4064E-01	3.8011E-03	3.8011E-06	grams	kg	0.705
grams							3.4555E+01	3.4555E-02	
7472840		1.1000E-07							
	U-234			activity mBq	activity mCi	activity Ci	SNM	source	
16460		5.143E-001	4.5670E-01	1.2627E-01	3.4128E-03	3.4128E-06	grams	kg	1.12613
grams							5.5046E-04	5.5046E-07	
7472840		6.2000E-03							
	U-235			activity mBq	activity mCi	activity Ci	SNM	source	
16460		2.022E-001	2.5890E-01	7.1584E-02	1.9347E-03	1.9347E-06	grams	kg	0.781
grams							8.7941E-01	8.7941E-04	
7472840		2.2000E-06							
	U-238			activity mBq	activity mCi	activity Ci	SNM	source	
16460		5.143E-001	6.9406E-01	1.9190E-01	5.1866E-03	5.1866E-06	grams	kg	0.741
grams							1.5255E+01	1.5255E-02	
7472840		3.4000E-07							

Totals for all flag 1 data

			corrected	activity mBq	activity mCi	activity Ci	SNM	source	
16460		3.1338E+00	3.6490E+00	1.0167E+00	2.7477E-02	2.7477E-05	grams	kg	flag1 data
			pCi/g	541 will be < than the 540 (MDA not added)			8.7941E-01	4.9811E-02	
130.6349206				**data for NORM**					
	U-nat		corrected pCi/g	activity mBq	activity mCi	activity Ci		source	
		7.1650E-01	9.5296E-01	2.6349E-01	7.1213E-03	7.1213E-06		kg	
								1.0030E-02	
		7.1000E-07							

U-nat		corrected pCi/g	activity mBq	activity mCi	activity Ci		source	
	3.1338E+00	3.6490E+00	1.0167E+00	2.7477E-02	2.7477E-05		kg total	norm data
							4.4586E-02	

X

container #
9205

shipping check sheet (For Form 540)

	Ac-227		corrected	activity mBq	activity mCi	activity Ci	SNM	source	
		1.021E-001	1.021E-001	3.3478E-02	9.0482E-04	9.0482E-07	grams	kg	
grams			pCi/g				1.2567E-08	1.2567E-11	
8862080		7.2000E+01							
	Pa-231			activity mBq	activity mCi	activity Ci	SNM	source	
19520		5.392E-001	5.392E-001	1.7680E-01	4.7784E-03	4.7784E-06	grams	kg	
grams							1.0167E-04	1.0167E-07	
8862080		4.7000E-02							
	Ra-223			activity mBq	activity mCi	activity Ci	SNM	source	
19520		6.458E-002	6.458E-002	2.1176E-02	5.7231E-04	5.7231E-07	grams	kg	
grams							1.1222E-11	1.1222E-14	
8862080		5.1000E+04							
	Ra-226			activity mBq	activity mCi	activity Ci	SNM	source	
19520		3.420E-001	2.4829E-01	8.1414E-02	2.2004E-03	2.2004E-06	grams	kg	1.37741
grams							2.2004E-06	2.2004E-09	
8862080		1.0000E+00							
	Ra228			activity mBq	activity mCi	activity Ci	SNM	source	
19520		8.448E-001	1.1983E+00	3.9292E-01	1.0619E-02	1.0619E-05	grams	kg	0.705
grams							3.9331E-08	3.9331E-11	
8862080		2.7000E+02							
	TH-227			activity mBq	activity mCi	activity Ci	SNM	source	
19520		1.021E-001	1.021E-001	3.3478E-02	9.0482E-04	9.0482E-07	grams	kg	
grams							2.9188E-11	2.9188E-14	
8862080		3.1000E+04							
	Th-228			activity mBq	activity mCi	activity Ci	SNM	source	
19520		7.387E-001	1.3341E+00	4.3744E-01	1.1823E-02	1.1823E-05	grams	kg	
grams							1.4418E-08	1.4418E-11	0.55371
8862080		8.2000E+02							
	Th-230			activity mBq	activity mCi	activity Ci	SNM	source	
19520		8.448E-001	6.2684E-01	2.0554E-01	5.5551E-03	5.5551E-06	grams	kg	
grams							2.6453E-04	2.6453E-07	1.34771
8862080		2.1000E-02							
	TH-232			activity mBq	activity mCi	activity Ci	SNM	source	
19520		8.448E-001	1.1983E+00	3.9292E-01	1.0619E-02	1.0619E-05	grams	kg	0.705
grams							9.6540E+01	9.6540E-02	
8862080		1.1000E-07							
	U-234			activity mBq	activity mCi	activity Ci	SNM	source	
19520		5.501E+000	4.8849E+00	1.6017E+00	4.3290E-02	4.3290E-05	grams	kg	1.12613
grams							6.9823E-03	6.9823E-06	
8862080		6.2000E-03							
	U-235			activity mBq	activity mCi	activity Ci	SNM	source	
19520		4.400E-001	5.6338E-01	1.8473E-01	4.9927E-03	4.9927E-06	grams	kg	0.781
grams							2.2694E+00	2.2694E-03	
8862080		2.2000E-06							
	U-238			activity mBq	activity mCi	activity Ci	SNM	source	
19520		5.501E+000	7.4238E+00	2.4342E+00	6.5790E-02	6.5790E-05	grams	kg	0.741
grams							1.9350E+02	1.9350E-01	
8862080		3.4000E-07							

Totals for all flag 1 data

			corrected	activity mBq	activity mCi	activity Ci	SNM	source	
19520		1.5865E+01	1.8184E+01	5.9959E+00	1.6205E-01	1.6205E-04	grams	kg	flag1 data
			pCi/g	541 will be < than the 540 (MDA not added)			2.2694E+00	2.9005E-01	
154.9206349				data for NORM					
	U-nat		corrected pCi/g	activity mBq	activity mCi	activity Ci		source	
		5.9410E+00	7.9871E+00	2.6190E+00	7.0783E-02	7.0783E-05		kg	
								9.9694E-02	
		7.1000E-07							

	U-nat		corrected pCi/g	activity mBq	activity mCi	activity Ci		source	
		1.5865E+01	1.8184E+01	5.9959E+00	1.6205E-01	1.6205E-04		kg total	norm data
								1.9624E-01	

[redacted]

container #
9171

shipping check sheet (For Form 540)

	Ac-227		corrected	activity mBq	activity mCi	activity Ci	SNM	source	
		3.005E-002	3.005E-002	1.0277E-02	2.7777E-04	2.7777E-07	grams	kg	
grams			pCi/g				3.8579E-09	3.8579E-12	
9243440		7.2000E+01							
	Pa-231			activity mBq	activity mCi	activity Ci	SNM	source	
20360		2.522E-001	2.522E-001	8.6254E-02	2.3312E-03	2.3312E-06	grams	kg	
grams							4.9600E-05	4.9600E-08	
9243440		4.7000E-02							
	Ra-223			activity mBq	activity mCi	activity Ci	SNM	source	
20360		1.876E-002	1.876E-002	6.4161E-03	1.7341E-04	1.7341E-07	grams	kg	
grams							3.4001E-12	3.4001E-15	
9243440		5.1000E+04							
	Ra-226			activity mBq	activity mCi	activity Ci	SNM	source	
20360		1.943E-001	1.4106E-01	4.8244E-02	1.3039E-03	1.3039E-06	grams	kg	1.37741
grams							1.3039E-06	1.3039E-09	
9243440		1.0000E+00							
	Ra228			activity mBq	activity mCi	activity Ci	SNM	source	
20360		2.385E-001	3.3830E-01	1.1570E-01	3.1270E-03	3.1270E-06	grams	kg	0.705
grams							1.1582E-08	1.1582E-11	
9243440		2.7000E+02							
	TH-227			activity mBq	activity mCi	activity Ci	SNM	source	
20360		3.005E-002	3.005E-002	1.0277E-02	2.7777E-04	2.7777E-07	grams	kg	
grams							8.9602E-12	8.9602E-15	
9243440		3.1000E+04							
	Th-228			activity mBq	activity mCi	activity Ci	SNM	source	
20360		2.023E-001	3.6535E-01	1.2495E-01	3.3771E-03	3.3771E-06	grams	kg	
grams							4.1184E-09	4.1184E-12	0.55371
9243440		8.2000E+02							
	Th-230			activity mBq	activity mCi	activity Ci	SNM	source	
20360		2.385E-001	1.7697E-01	6.0524E-02	1.6358E-03	1.6358E-06	grams	kg	
grams							7.7894E-05	7.7894E-08	1.34771
9243440		2.1000E-02							
	TH-232			activity mBq	activity mCi	activity Ci	SNM	source	
20360		2.385E-001	3.3830E-01	1.1570E-01	3.1270E-03	3.1270E-06	grams	kg	0.705
grams							2.8428E+01	2.8428E-02	
9243440		1.1000E-07							
	U-234			activity mBq	activity mCi	activity Ci	SNM	source	
20360		3.543E-001	3.1462E-01	1.0760E-01	2.9081E-03	2.9081E-06	grams	kg	1.12613
grams							4.6906E-04	4.6906E-07	
9243440		6.2000E-03							
	U-235			activity mBq	activity mCi	activity Ci	SNM	source	
20360		2.012E-001	2.5762E-01	8.8107E-02	2.3813E-03	2.3813E-06	grams	kg	0.781
grams							1.0824E+00	1.0824E-03	
9243440		2.2000E-06							
	U-238			activity mBq	activity mCi	activity Ci	SNM	source	
20360		3.543E-001	4.7814E-01	1.6353E-01	4.4196E-03	4.4196E-06	grams	kg	0.741
grams							1.2999E+01	1.2999E-02	
9243440		3.4000E-07							

Totals for all flag 1 data

			corrected	activity mBq	activity mCi	activity Ci	SNM	source	
20360		2.3530E+00	2.7114E+00	9.3758E-01	2.5340E-02	2.5340E-05	grams	kg	flag1 data
			pCi/g	541 will be < than the 540 (MDA not added)			1.0824E+00	4.1427E-02	
161.5873016				data for NORM					
	U-nat		corrected pCi/g	activity mBq	activity mCi	activity Ci		source	
		5.5550E-01	7.3576E-01	2.5163E-01	6.8009E-03	6.8009E-06		kg	
								9.5788E-03	
		7.1000E-07							

	U-nat		corrected pCi/g	activity mBq	activity mCi	activity Ci		source	
		2.3530E+00	2.7114E+00	9.3758E-01	2.5340E-02	2.5340E-05		kg total	norm data
								3.8007E-02	

X

container #
9204

shipping check sheet (For Form 540)

	Ac-227		corrected	activity mBq	activity mCi	activity Ci	SNM	source	
		6.094E-002	6.094E-002	2.0381E-02	5.5085E-04	5.5085E-07	grams	kg	
grams			pCi/g				7.6506E-09	7.6506E-12	
9039140		7.2000E+01							
	Pa-231			activity mBq	activity mCi	activity Ci	SNM	source	
19910		4.866E-001	4.866E-001	1.6274E-01	4.3984E-03	4.3984E-06	grams	kg	
grams							9.3584E-05	9.3584E-08	
9039140		4.7000E-02							
	Ra-223			activity mBq	activity mCi	activity Ci	SNM	source	
19910		1.425E-001	1.425E-001	4.7659E-02	1.2881E-03	1.2881E-06	grams	kg	
grams							2.5256E-11	2.5256E-14	
9039140		5.1000E+04							
	Ra-226			activity mBq	activity mCi	activity Ci	SNM	source	
19910		2.906E-001	2.1098E-01	7.0560E-02	1.9070E-03	1.9070E-06	grams	kg	1.37741
grams							1.9070E-06	1.9070E-09	
9039140		1.0000E+00							
	Ra228			activity mBq	activity mCi	activity Ci	SNM	source	
19910		7.129E-001	1.0112E+00	3.3820E-01	9.1404E-03	9.1404E-06	grams	kg	0.705
grams							3.3853E-08	3.3853E-11	
9039140		2.7000E+02							
	TH-227			activity mBq	activity mCi	activity Ci	SNM	source	
19910		6.094E-002	6.094E-002	2.0381E-02	5.5085E-04	5.5085E-07	grams	kg	
grams							1.7769E-11	1.7769E-14	
9039140		3.1000E+04							
	Th-228			activity mBq	activity mCi	activity Ci	SNM	source	
19910		6.257E-001	1.1300E+00	3.7793E-01	1.0214E-02	1.0214E-05	grams	kg	
grams							1.2457E-08	1.2457E-11	0.55371
9039140		8.2000E+02							
	Th-230			activity mBq	activity mCi	activity Ci	SNM	source	
19910		7.129E-001	5.2897E-01	1.7691E-01	4.7814E-03	4.7814E-06	grams	kg	
grams							2.2769E-04	2.2769E-07	1.34771
9039140		2.1000E-02							
	TH-232			activity mBq	activity mCi	activity Ci	SNM	source	
19910		7.129E-001	1.0112E+00	3.3820E-01	9.1404E-03	9.1404E-06	grams	kg	0.705
grams							8.3095E+01	8.3095E-02	
9039140		1.1000E-07							
	U-234			activity mBq	activity mCi	activity Ci	SNM	source	
19910		8.537E+000	7.5808E+00	2.5354E+00	6.8524E-02	6.8524E-05	grams	kg	1.12613
grams							1.1052E-02	1.1052E-05	
9039140		6.2000E-03							
	U-235			activity mBq	activity mCi	activity Ci	SNM	source	
19910		4.617E-001	5.9117E-01	1.9771E-01	5.3436E-03	5.3436E-06	grams	kg	0.781
grams							2.4289E+00	2.4289E-03	
9039140		2.2000E-06							
	U-238			activity mBq	activity mCi	activity Ci	SNM	source	
19910		8.537E+000	1.1521E+01	3.8531E+00	1.0414E-01	1.0414E-04	grams	kg	0.741
grams							3.0629E+02	3.0629E-01	
9039140		3.4000E-07							

Totals for all flag 1 data

			corrected	activity mBq	activity mCi	activity Ci	SNM	source	
19910		2.1342E+01	2.4275E+01	8.1392E+00	2.1998E-01	2.1998E-04	grams	kg	flag1 data
			pCi/g	541 will be < than the 540 (MDA not added)			2.4289E+00	3.8940E-01	
158.015873				data for NORM					
	U-nat		corrected pCi/g	activity mBq	activity mCi	activity Ci		source	
		8.9987E+00	1.2112E+01	4.0509E+00	1.0948E-01	1.0948E-04		kg	
								1.5420E-01	
		7.1000E-07							

U-nat		corrected pCi/g	activity mBq	activity mCi	activity Ci		source	
	2.1342E+01	2.4275E+01	8.1392E+00	2.1998E-01	2.1998E-04		kg total	norm data
							2.3731E-01	

X

container #
9219

shipping check sheet (For Form 540)

	Ac-227		corrected	activity mBq	activity mCi	activity Ci	SNM	source	
		4.894E-002	4.894E-002	1.0942E-02	2.9573E-04	2.9573E-07	grams	kg	
grams			pCi/g				4.1074E-09	4.1074E-12	
6042740		7.2000E+01							
	Pa-231			activity mBq	activity mCi	activity Ci	SNM	source	
13310		1.477E-001	1.477E-001	3.3023E-02	8.9251E-04	8.9251E-07	grams	kg	
grams							1.8990E-05	1.8990E-08	
6042740		4.7000E-02							
	Ra-223			activity mBq	activity mCi	activity Ci	SNM	source	
13310		4.314E-002	4.314E-002	9.6453E-03	2.6068E-04	2.6068E-07	grams	kg	
grams							5.1114E-12	5.1114E-15	
6042740		5.1000E+04							
	Ra-226			activity mBq	activity mCi	activity Ci	SNM	source	
13310		1.818E-001	1.3199E-01	2.9510E-02	7.9756E-04	7.9756E-07	grams	kg	1.37741
grams							7.9756E-07	7.9756E-10	
6042740		1.0000E+00							
	Ra228			activity mBq	activity mCi	activity Ci	SNM	source	
13310		2.537E-001	3.5986E-01	8.0458E-02	2.1745E-03	2.1745E-06	grams	kg	0.705
grams							8.0538E-09	8.0538E-12	
6042740		2.7000E+02							
	TH-227			activity mBq	activity mCi	activity Ci	SNM	source	
13310		4.894E-002	4.894E-002	1.0942E-02	2.9573E-04	2.9573E-07	grams	kg	
grams							9.5397E-12	9.5397E-15	
6042740		3.1000E+04							
	Th-228			activity mBq	activity mCi	activity Ci	SNM	source	
13310		2.309E-001	4.1701E-01	9.3235E-02	2.5199E-03	2.5199E-06	grams	kg	
grams							3.0730E-09	3.0730E-12	0.55371
6042740		8.2000E+02							
	Th-230			activity mBq	activity mCi	activity Ci	SNM	source	
13310		2.537E-001	1.8825E-01	4.2088E-02	1.1375E-03	1.1375E-06	grams	kg	
grams							5.4167E-05	5.4167E-08	1.34771
6042740		2.1000E-02							
	TH-232			activity mBq	activity mCi	activity Ci	SNM	source	
13310		2.537E-001	3.5986E-01	8.0458E-02	2.1745E-03	2.1745E-06	grams	kg	0.705
grams							1.9768E+01	1.9768E-02	
6042740		1.1000E-07							
	U-234			activity mBq	activity mCi	activity Ci	SNM	source	
13310		7.725E-001	6.8598E-01	1.5337E-01	4.1452E-03	4.1452E-06	grams	kg	1.12613
grams							6.6858E-04	6.6858E-07	
6042740		6.2000E-03							
	U-235			activity mBq	activity mCi	activity Ci	SNM	source	
13310		2.045E-001	2.6184E-01	5.8543E-02	1.5823E-03	1.5823E-06	grams	kg	0.781
grams							7.1921E-01	7.1921E-04	
6042740		2.2000E-06							
	U-238			activity mBq	activity mCi	activity Ci	SNM	source	
13310		7.725E-001	1.0425E+00	2.3309E-01	6.2996E-03	6.2996E-06	grams	kg	0.741
grams							1.8528E+01	1.8528E-02	
6042740		3.4000E-07							

Totals for all flag 1 data

			corrected	activity mBq	activity mCi	activity Ci	SNM	source	
13310		3.2120E+00	3.6871E+00	8.3530E-01	2.2576E-02	2.2576E-05	grams	kg	flag1 data
			pCi/g	541 will be < than the 540 (MDA not added)			7.1921E-01	3.8297E-02	
105.6349206				data for NORM					
	U-nat		corrected pCi/g	activity mBq	activity mCi	activity Ci		source	
		9.7700E-01	1.3044E+00	2.9163E-01	7.8819E-03	7.8819E-06		kg	
								1.1101E-02	
		7.1000E-07							

	U-nat		corrected pCi/g	activity mBq	activity mCi	activity Ci		source	
		3.2120E+00	3.6871E+00	8.3530E-01	2.2576E-02	2.2576E-05		kg total	norm data
								3.0870E-02	

X

container #
9200

shipping check sheet (For Form 540)

	Ac-227		corrected	activity mBq	activity mCi	activity Ci	SNM	source	
		7.821E-002	7.821E-002	2.6604E-02	7.1902E-04	7.1902E-07	grams	kg	
grams			pCi/g				9.9864E-09	9.9864E-12	
9193500		7.2000E+01							
	Pa-231			activity mBq	activity mCi	activity Ci	SNM	source	
20250		1.764E-001	1.764E-001	6.0004E-02	1.6217E-03	1.6217E-06	grams	kg	
grams							3.4505E-05	3.4505E-08	
9193500		4.7000E-02							
	Ra-223			activity mBq	activity mCi	activity Ci	SNM	source	
20250		4.842E-002	4.842E-002	1.6471E-02	4.4515E-04	4.4515E-07	grams	kg	
grams							8.7284E-12	8.7284E-15	
9193500		5.1000E+04							
	Ra-226			activity mBq	activity mCi	activity Ci	SNM	source	
20250		2.985E-001	2.1671E-01	7.3716E-02	1.9923E-03	1.9923E-06	grams	kg	1.37741
grams							1.9923E-06	1.9923E-09	
9193500		1.0000E+00							
	Ra228			activity mBq	activity mCi	activity Ci	SNM	source	
20250		6.753E-001	9.5787E-01	3.2583E-01	8.8062E-03	8.8062E-06	grams	kg	0.705
grams							3.2616E-08	3.2616E-11	
9193500		2.7000E+02							
	TH-227			activity mBq	activity mCi	activity Ci	SNM	source	
20250		7.821E-002	7.821E-002	2.6604E-02	7.1902E-04	7.1902E-07	grams	kg	
grams							2.3194E-11	2.3194E-14	
9193500		3.1000E+04							
	Th-228			activity mBq	activity mCi	activity Ci	SNM	source	
20250		7.345E-001	1.3265E+00	4.5122E-01	1.2195E-02	1.2195E-05	grams	kg	
grams							1.4872E-08	1.4872E-11	0.55371
9193500		8.2000E+02							
	Th-230			activity mBq	activity mCi	activity Ci	SNM	source	
20250		6.753E-001	5.0107E-01	1.7044E-01	4.6066E-03	4.6066E-06	grams	kg	
grams							2.1936E-04	2.1936E-07	1.34771
9193500		2.1000E-02							
	TH-232			activity mBq	activity mCi	activity Ci	SNM	source	
20250		6.753E-001	9.5787E-01	3.2583E-01	8.8062E-03	8.8062E-06	grams	kg	0.705
grams							8.0056E+01	8.0056E-02	
9193500		1.1000E-07							
	U-234			activity mBq	activity mCi	activity Ci	SNM	source	
20250		1.131E+001	1.0043E+01	3.4163E+00	9.2333E-02	9.2333E-05	grams	kg	1.12613
grams							1.4892E-02	1.4892E-05	
9193500		6.2000E-03							
	U-235			activity mBq	activity mCi	activity Ci	SNM	source	
20250		5.284E-001	6.7657E-01	2.3014E-01	6.2200E-03	6.2200E-06	grams	kg	0.781
grams							2.8273E+00	2.8273E-03	
9193500		2.2000E-06							
	U-238			activity mBq	activity mCi	activity Ci	SNM	source	
20250		1.131E+001	1.5263E+01	5.1919E+00	1.4032E-01	1.4032E-04	grams	kg	0.741
grams							4.1271E+02	4.1271E-01	
9193500		3.4000E-07							

Totals for all flag 1 data

			corrected	activity mBq	activity mCi	activity Ci	SNM	source	
20250		2.6589E+01	3.0246E+01	1.0315E+01	2.7879E-01	2.7879E-04	grams	kg	flag1 data
			pCi/g	541 will be < than the 540 (MDA not added)			2.8273E+00	4.9278E-01	
160.7142857				data for NORM					
	U-nat		corrected pCi/g	activity mBq	activity mCi	activity Ci		source	
		1.1838E+01	1.5940E+01	5.4220E+00	1.4654E-01	1.4654E-04		kg	
								2.0640E-01	
		7.1000E-07							

U-nat		corrected pCi/g	activity mBq	activity mCi	activity Ci		source	
	2.6589E+01	3.0246E+01	1.0315E+01	2.7879E-01	2.7879E-04		kg total	norm data
							2.8647E-01	

Y

container #
9190

shipping check sheet (For Form 540)

	Ac-227		corrected	activity mBq	activity mCi	activity Ci	SNM	source	
		8.366E-002	8.366E-002	2.4312E-02	6.5708E-04	6.5708E-07	grams	kg	
grams			pCi/g				9.1261E-09	9.1261E-12	
7854200		7.2000E+01							
	Pa-231			activity mBq	activity mCi	activity Ci	SNM	source	
17300		3.017E-001	3.017E-001	8.7676E-02	2.3696E-03	2.3696E-06	grams	kg	
grams							5.0417E-05	5.0417E-08	
7854200		4.7000E-02							
	Ra-223			activity mBq	activity mCi	activity Ci	SNM	source	
17300		3.694E-002	3.694E-002	1.0735E-02	2.9013E-04	2.9013E-07	grams	kg	
grams							5.6889E-12	5.6889E-15	
7854200		5.1000E+04							
	Ra-226			activity mBq	activity mCi	activity Ci	SNM	source	
17300		2.252E-001	1.6350E-01	4.7513E-02	1.2841E-03	1.2841E-06	grams	kg	1.37741
grams							1.2841E-06	1.2841E-09	
7854200		1.0000E+00							
	Ra228			activity mBq	activity mCi	activity Ci	SNM	source	
17300		3.341E-001	4.7390E-01	1.3772E-01	3.7221E-03	3.7221E-06	grams	kg	0.705
grams							1.3786E-08	1.3786E-11	
7854200		2.7000E+02							
	TH-227			activity mBq	activity mCi	activity Ci	SNM	source	
17300		8.366E-002	8.366E-002	2.4312E-02	6.5708E-04	6.5708E-07	grams	kg	
grams							2.1196E-11	2.1196E-14	
7854200		3.1000E+04							
	Th-228			activity mBq	activity mCi	activity Ci	SNM	source	
17300		2.779E-001	5.0189E-01	1.4585E-01	3.9419E-03	3.9419E-06	grams	kg	
grams							4.8072E-09	4.8072E-12	0.55371
7854200		8.2000E+02							
	Th-230			activity mBq	activity mCi	activity Ci	SNM	source	
17300		3.341E-001	2.4790E-01	7.2042E-02	1.9471E-03	1.9471E-06	grams	kg	
grams							9.2718E-05	9.2718E-08	1.34771
7854200		2.1000E-02							
	TH-232			activity mBq	activity mCi	activity Ci	SNM	source	
17300		3.341E-001	4.7390E-01	1.3772E-01	3.7221E-03	3.7221E-06	grams	kg	0.705
grams							3.3837E+01	3.3837E-02	
7854200		1.1000E-07							
	U-234			activity mBq	activity mCi	activity Ci	SNM	source	
17300		1.483E+000	1.3169E+00	3.8270E-01	1.0343E-02	1.0343E-05	grams	kg	1.12613
grams							1.6683E-03	1.6683E-06	
7854200		6.2000E-03							
	U-235			activity mBq	activity mCi	activity Ci	SNM	source	
17300		3.975E-002	5.0896E-02	1.4791E-02	3.9975E-04	3.9975E-07	grams	kg	0.781
grams							1.8170E-01	1.8170E-04	
7854200		2.2000E-06							
	U-238			activity mBq	activity mCi	activity Ci	SNM	source	
17300		1.483E+000	2.0013E+00	5.8160E-01	1.5719E-02	1.5719E-05	grams	kg	0.741
grams							4.6232E+01	4.6232E-02	
7854200		3.4000E-07							

Totals for all flag 1 data

			corrected	activity mBq	activity mCi	activity Ci	SNM	source	
17300		5.0171E+00	5.6525E+00	1.6670E+00	4.5053E-02	4.5053E-05	grams	kg	flag1 data
			pCi/g	541 will be < than the 540 (MDA not added)			1.8170E-01	8.0072E-02	
137.3015873									

data for NORM

	U-nat		corrected pCi/g	activity mBq	activity mCi	activity Ci		source
		1.5228E+00	2.0522E+00	5.9639E-01	1.6119E-02	1.6119E-05		kg
								2.2702E-02
		7.1000E-07						

	U-nat		corrected pCi/g	activity mBq	activity mCi	activity Ci		source
		5.0171E+00	5.6525E+00	1.6670E+00	4.5053E-02	4.5053E-05		kg total
								5.6542E-02

norm data

container #
9211

shipping check sheet (For Form 540)

	Ac-227		corrected	activity mBq	activity mCi	activity Ci	SNM	source	
		6.549E-002	6.549E-002	1.5731E-02	4.2517E-04	4.2517E-07	grams	kg	
grams			pCi/g				5.9052E-09	5.9052E-12	
6492200		7.2000E+01							
	Pa-231			activity mBq	activity mCi	activity Ci	SNM	source	
14300		2.346E-001	2.346E-001	5.6354E-02	1.5231E-03	1.5231E-06	grams	kg	
grams							3.2406E-05	3.2406E-08	
6492200		4.7000E-02							
	Ra-223			activity mBq	activity mCi	activity Ci	SNM	source	
14300		4.675E-002	4.675E-002	1.1230E-02	3.0351E-04	3.0351E-07	grams	kg	
grams							5.9512E-12	5.9512E-15	
6492200		5.1000E+04							
	Ra-226			activity mBq	activity mCi	activity Ci	SNM	source	
14300		2.616E-001	1.8992E-01	4.5621E-02	1.2330E-03	1.2330E-06	grams	kg	1.37741
grams							1.2330E-06	1.2330E-09	
6492200		1.0000E+00							
	Ra228			activity mBq	activity mCi	activity Ci	SNM	source	
14300		4.371E-001	6.2000E-01	1.4893E-01	4.0252E-03	4.0252E-06	grams	kg	0.705
grams							1.4908E-08	1.4908E-11	
6492200		2.7000E+02							
	TH-227			activity mBq	activity mCi	activity Ci	SNM	source	
14300		6.549E-002	6.549E-002	1.5731E-02	4.2517E-04	4.2517E-07	grams	kg	
grams							1.3715E-11	1.3715E-14	
6492200		3.1000E+04							
	Th-228			activity mBq	activity mCi	activity Ci	SNM	source	
14300		4.064E-001	7.3396E-01	1.7631E-01	4.7650E-03	4.7650E-06	grams	kg	
grams							5.8110E-09	5.8110E-12	0.55371
6492200		8.2000E+02							
	Th-230			activity mBq	activity mCi	activity Ci	SNM	source	
14300		4.371E-001	3.2433E-01	7.7907E-02	2.1056E-03	2.1056E-06	grams	kg	
grams							1.0027E-04	1.0027E-07	1.34771
6492200		2.1000E-02							
	TH-232			activity mBq	activity mCi	activity Ci	SNM	source	
14300		4.371E-001	6.2000E-01	1.4893E-01	4.0252E-03	4.0252E-06	grams	kg	0.705
grams							3.6592E+01	3.6592E-02	
6492200		1.1000E-07							
	U-234			activity mBq	activity mCi	activity Ci	SNM	source	
14300		5.146E+000	4.5696E+00	1.0977E+00	2.9867E-02	2.9867E-05	grams	kg	1.12613
grams							4.7850E-03	4.7850E-06	
6492200		6.2000E-03							
	U-235			activity mBq	activity mCi	activity Ci	SNM	source	
14300		2.720E-001	3.4827E-01	8.3659E-02	2.2610E-03	2.2610E-06	grams	kg	0.781
grams							1.0277E+00	1.0277E-03	
6492200		2.2000E-06							
	U-238			activity mBq	activity mCi	activity Ci	SNM	source	
14300		5.146E+000	6.9447E+00	1.6682E+00	4.5086E-02	4.5086E-05	grams	kg	0.741
grams							1.3261E+02	1.3261E-01	
6492200		3.4000E-07							

Totals for all flag 1 data

			corrected	activity mBq	activity mCi	activity Ci	SNM	source	
14300		1.2956E+01	1.4698E+01	3.5463E+00	9.5845E-02	9.5845E-05	grams	kg	flag1 data
			pCi/g	541 will be < than the 540 (MDA not added)			1.0277E+00	1.6920E-01	
113.4920635				data for NORM					
	U-nat		corrected pCi/g	activity mBq	activity mCi	activity Ci		source	
		5.4180E+00	7.2929E+00	1.7518E+00	4.7347E-02	4.7347E-05		kg	
								6.6686E-02	
		7.1000E-07							

U-nat		corrected pCi/g	activity mBq	activity mCi	activity Ci		source	
	1.2956E+01	1.4698E+01	3.5463E+00	9.5845E-02	9.5845E-05		kg total	norm data
							1.0328E-01	

N

Posillico Bros. Asphalt Co.

1610 New Highway, Farmingdale, N.Y. 11735
Plant Tele: 293-2620, 2621

HOT STORAGE

%9

10:20 4-22-05 TICKET NUMBER 9190

17380 lb GROSS

Posillico Bros. Asphalt Co.

1610 New Highway, Farmingdale, N.Y. 11735
Plant Tele: 293-2620, 2621

HOT STORAGE

15:29 4-25-05 TICKET NUMBER 9191

17730 lb GROSS

Posillico Bros. Asphalt Co.

1610 New Highway, Farmingdale, N.Y. 11735
Plant Tele: 293-2620, 2621

HOT STORAGE

16:26 4-25-05 TICKET NUMBER 9204

19990 lb GROSS

FORM 540 — Envirocare of Utah, Inc.

UNIFORM LOW-LEVEL RADIOACTIVE WASTE MANIFEST

SHIPPING PAPER

1. EMERGENCY TELEPHONE NUMBER (Include Area Code): 1-800-424-9300

ORGANIZATION: Chemtrec

2. IS THIS AN "EXCLUSIVE USE" SHIPMENT? ☐ YES ☑ NO

3. TOTAL NUMBER OF PACKAGES IDENTIFIED ON THIS MANIFEST ====> 11

4. DOES EPA REGULATED WASTE REQUIRING A MANIFEST ACCOMPANY THIS SHIPMENT? ☐ YES ☑ NO
If "Yes," provide Manifest Number =====>

EPA MANIFEST NUMBER

5. SHIPPER – NAME AND FACILITY
GTEOSI
140 Cantiague Rock RD
Hicksville, NY 11801

Utah Generator Site Access Permit No.: 020 500 1352
SHIPMENT NUMBER: MRMX-002070

CONTACT: Jean Agostinelli

6. CARRIER – Name and Address
Priority Transport Services, Inc.
391 Anthony Street
Schenectady, NY 12306

CONTACT: Dispatch

SIGNATURE – Authorized carrier acknowledging waste receipt

SHIPPER I.D. NUMBER: 0840-01-979
☐ COLLECTOR
☐ PROCESSOR
☑ GENERATOR TYPE (Specify) I

TELEPHONE NUMBER (Include Area Code): 516-932-9157

EPA I.D. NUMBER: NYR000104976

SHIPPING DATE: 05/11/2005

TELEPHONE (Include Area Code): 800-235-0069

DATE: 5-11-05

7. FORM 540 AND 540A — PAGE 1 OF 3 PAGE(S)
FORM 541 AND 541A — 6 PAGE(S)
FORM 542 AND 542A — None PAGE(S)
ADDITIONAL INFORMATION — None PAGE(S)

8. MANIFEST NUMBER (Use this number on all continuation pages): 0840-01-979

9. CONSIGNEE - Name and Facility
Envirocare of Utah, Inc.
Clive Disposal Site (Bulk Waste Facility)
Interstate 80, Exit 49
Clive, UT 84029

CONTACT: Shipping and Receiving
TELEPHONE (Include Area Code): (435)884-0155

SIGNATURE – Authorized consignee acknowledging waste receipt: L84525

DATE: 5-25-05

10. CERTIFICATION
This is to certify that the herein-named materials are properly classified, described, packaged, marked, and labeled and are in proper condition for transportation according to the applicable regulations of the Department of Transportation. This also certifies that the materials are classified, packaged, marked, and labeled and are in proper condition for transportation and disposal as described in accordance with the requirements of 10 CFR Parts 20 and 61, or equivalent state regulations.

AUTHORIZED SIGNATURE: [signature] TITLE: Broker DATE: 5-11-05

11. U.S. DEPARTMENT OF TRANSPORTATION DESCRIPTION (Including proper shipping name, hazard class, UN ID number, and any additional information)	12. DOT LABEL "RADIOACTIVE"	13. TRANSPORT INDEX	14. PHYSICAL AND CHEMICAL FORM	15. INDIVIDUAL RADIONUCLIDES	16. TOTAL PACKAGE ACTIVITY MBq	mCi	17. LSA/SCO CLASS	18. TOTAL WEIGHT OR VOLUME (Use appropriate units)	19. IDENTIFICATION NUMBER OF PACKAGE
Soil,DOT Non-Regulated, containing Radionuclides	NA	NA	Solid / OXIDES	Ac-227 Pa-231 Ra-223 Ra-226 Ra-228 Th-227 Th-228 Th-230 Th-232 U-234 U-Nat	2.6116E+00	7.0585E-02	NA	12560 LBS; 99.05 FT3	9122
Soil,DOT Non-Regulated, containing Radionuclides	NA	NA	Solid / OXIDES	Ac-227 Pa-231 Ra-223 Ra-226 Ra-228 Th-227 Th-228 Th-230 Th-232 U-234 U-Nat	7.7875E+00	2.1047E-01	NA	17760 LBS; 140.32 FT3	9125
Soil,DOT Non-Regulated, containing Radionuclides	NA	NA	Solid / OXIDES	Ac-227 Pa-231 Ra-223 Ra-226 Ra-228 Th-227 Th-228 Th-230 Th-232 U-234 U-Nat	2.6754E+00	7.2308E-02	NA	18490 LBS; 146.11 FT3	9127

FOR CONSIGNEE USE ONLY

___ Record Waste Description Inadequate
___ Contamination or Leakage Detected
___ Unexpected Exposure Rates Detected
___ Labels, Markings, etc. Inadequate
___ Container Integrity Inadequate
___ Other
✓ No Violations Detected on this Shipment

20. TERMS AND CONDITIONS

A. HAZARDOUS MATERIALS: Generator represents & warrants that Waste Material __ is (or) ✓ is not a hazardous waste as defined in 40 CFR 261. Where the material is a hazardous waste, this shipment is also accompanied by a separate and completed hazardous waste manifest, along with the appropriate land-disposal restriction notice and/or certification as required by 40 CFR 268.1.

B. TITLE: Upon acceptance at the disposal site by Envirocare of Utah, Inc., and all appropriate regulatory authorities, title to the Waste Material which conforms to Generator's representations herein shall thereupon transfer from Generator and be vested in Envirocare of Utah, Inc.

C. WASTE MATERIAL: Generator represents and warrants that all data set forth in this (UNIFORM LOW-LEVEL RADIOACTIVE WASTE MANIFEST) are true and correct in all respects and in accordance with all applicable governmental laws, rules, regulations and Envirocare of Utah Inc.'s facility license.

D. INDEMNIFICATION: Generator agrees to indemnify Envirocare of Utah, Inc., its officers, employees and agents against all losses and liability whatsoever if such losses or liability results from the failure of the Waste Material to conform in all material respects to the data supplied on the (UNIFORM LOW-LEVEL RADIOACTIVE WASTE MANIFEST,) or if this shipment fails to meet the standards prescribed by the Department of Transportation or any governmental agency having jurisdiction over such matters.

FORM 540 (04-03)

FORM 540 — **Envirocare of Utah, Inc.**

UNIFORM LOW-LEVEL RADIOACTIVE WASTE MANIFEST

SHIPPING PAPER

1. EMERGENCY TELEPHONE NUMBER (Include Area Code): 1-800-424-9300

ORGANIZATION: Chemtrec

2. IS THIS AN "EXCLUSIVE USE" SHIPMENT? ☐ YES ☑ NO

3. TOTAL NUMBER OF PACKAGES IDENTIFIED ON THIS MANIFEST =====> 11

4. DOES EPA REGULATED WASTE REQUIRING A MANIFEST ACCOMPANY THIS SHIPMENT? ☐ YES ☑ NO
If "Yes," provide Manifest Number =====>

EPA MANIFEST NUMBER

5. SHIPPER -- NAME AND FACILITY
GTEOSI
140 Cantiague Rock RD
Hicksville, NY 11801

SHIPPER I.D. NUMBER: 0840-01-979
☐ COLLECTOR
☐ PROCESSOR

Utah Generator Site Access Permit No.: 020 500 1352
SHIPMENT NUMBER: MRMX-002070
☑ GENERATOR TYPE (Specify) I

CONTACT: Jean Agostinelli
TELEPHONE NUMBER (Include Area Code): 516-932-9157

6. CARRIER -- Name and Address
Priority Transport Services, Inc.
391 Anthony Street
Schenectady, NY 12308

EPA I.D. NUMBER: NYR000104976
SHIPPING DATE: 05/11/2005

CONTACT: Dispatch
TELEPHONE (Include Area Code): 800-235-0069

SIGNATURE -- Authorized carrier acknowledging waste receipt
DATE: 5-11-05

7. FORM 540 AND 540A — PAGE 1 OF 3 PAGE(S)
FORM 541 AND 541A — 6 PAGE(S)
FORM 542 AND 542A — None PAGE(S)
ADDITIONAL INFORMATION — None PAGE(S)

8. MANIFEST NUMBER (Use this number on all continuation pages): 0840-01-979

9. CONSIGNEE - Name and Facility
Envirocare of Utah, Inc.
Clive Disposal Site (Bulk Waste Facility)
Interstate 80, Exit 49
Clive, UT 84029

CONTACT: Shipping and Receiving
TELEPHONE (Include Area Code): (435)884-0155

SIGNATURE -- Authorized consignee acknowledging waste receipt
DATE

10. CERTIFICATION
This is to certify that the herein-named materials are properly classified, described, packaged, marked, and labeled and are in proper condition for transportation according to the applicable regulations of the Department of Transportation. This also certifies that the materials are classified, packaged, marked, and labeled and are in proper condition for transportation and disposal as described in accordance with the requirements of 10 CFR Parts 20 and 61, or equivalent state regulations.

AUTHORIZED SIGNATURE: [signature] — TITLE: Broker — DATE: 5-11-05

11. U.S. DEPARTMENT OF TRANSPORTATION DESCRIPTION (Including proper shipping name, hazard class, UN ID number, and any additional information)	12. DOT LABEL "RADIOACTIVE"	13. TRANSPORT INDEX	14. PHYSICAL AND CHEMICAL FORM	15. INDIVIDUAL RADIONUCLIDES	16. TOTAL PACKAGE ACTIVITY MBq	16. TOTAL PACKAGE ACTIVITY mCi	17. LSA/SCO CLASS	18. TOTAL WEIGHT OR VOLUME (Use appropriate units)	19. IDENTIFICATION NUMBER OF PACKAGE
Soil,DOT Non-Regulated, containing Radionuclides	NA	NA	Solid / OXIDES	Ac-227 Pa-231 Ra-223 Ra-226 Ra-228 Th-227 Th-228 Th-230 Th-232 U-234 U-Nat	2.6116E+00	7.0585E-02	NA	12560 LBS; 99.05 FT3	9122
Soil,DOT Non-Regulated, containing Radionuclides	NA	NA	Solid / OXIDES	Ac-227 Pa-231 Ra-223 Ra-226 Ra-228 Th-227 Th-228 Th-230 Th-232 U-234 U-Nat	7.7875E+00	2.1047E-01	NA	17760 LBS; 140.32 FT3	9125
Soil,DOT Non-Regulated, containing Radionuclides	NA	NA	Solid / OXIDES	Ac-227 Pa-231 Ra-223 Ra-226 Ra-228 Th-227 Th-228 Th-230 Th-232 U-234 U-Nat	2.6754E+00	7.2308E-02	NA	18490 LBS; 146.11 FT3	9127

FOR CONSIGNEE USE ONLY

____ Record Waste Description Inadequate
____ Contamination or Leakage Detected
____ Unexpected Exposure Rates Detected
____ Labels, Markings, etc. Inadequate
____ Container Integrity Inadequate
____ Other
____ No Violations Detected on this Shipment

20. TERMS AND CONDITIONS

A. HAZARDOUS MATERIALS: Generator represents & warrants that Waste Material __ is (or) ✓ is not a hazardous waste as defined in 40 CFR 261. Where the material is a hazardous waste, this shipment is also accompanied by a separate and completed hazardous waste manifest, along with the appropriate land-disposal restriction notice and/or certification as required by 40 CFR 268.1.

B. TITLE: Upon acceptance at the disposal site by Envirocare of Utah, Inc., and all appropriate regulatory authorities, title to the Waste Material which conforms to Generator's representations herein shall thereupon transfer from Generator and be vested in Envirocare of Utah, Inc.

C. WASTE MATERIAL: Generator represents and warrants that all data set forth in this (UNIFORM LOW-LEVEL RADIOACTIVE WASTE MANIFEST) are true and correct in all respects and in accordance with all applicable governmental laws, rules, regulations and Envirocare of Utah Inc.'s facility license.

D. INDEMNIFICATION: Generator agrees to indemnify Envirocare of Utah, Inc., its officers, employees and agents against all losses and liability whatsoever if such losses or liability results from the failure of the Waste Material to conform in all material respects to the data supplied on the (UNIFORM LOW-LEVEL RADIOACTIVE WASTE MANIFEST,) or if this shipment fails to meet the standards prescribed by the Department of Transportation or any governmental agency having jurisdiction over such matters.

FORM 540A

Envirocare of Utah, Inc.

UNIFORM LOW-LEVEL RADIOACTIVE WASTE MANIFEST

SHIPPING PAPER (CONTINUATION)

8. MANIFEST NUMBER
(Use this number on all continuation pages)
0840-01-979

11. U.S. DEPARTMENT OF TRANSPORTATION DESCRIPTION (Including proper shipping name, hazard class, UN ID number, and any additional information)	12. DOT LABEL "RADIOACTIVE"	13. TRANSPORT INDEX	14. PHYSICAL AND CHEMICAL FORM	15. INDIVIDUAL RADIONUCLIDES				16. TOTAL PACKAGE ACTIVITY MBq	mCi	17. LSA/SCO CLASS	18. TOTAL WEIGHT OR VOLUME (Use appropriate units)	19. IDENTIFICATION NUMBER OF PACKAGE
Soil,DOT Non-Regulated, containing Radionuclides	NA	NA	Solid / OXIDES	Ac-227	Pa-231	Ra-223	Ra-226	2.1818E+00	5.8967E-02	NA	22170 LBS; 175.32 FT3	9135
				Ra-228	Th-227	Th-228	Th-230					
				Th-232	U-234	U-Nat						
Soil,DOT Non-Regulated, containing Radionuclides	NA	NA	Solid / OXIDES	Ac-227	Pa-231	Ra-223	Ra-226	1.9750E+00	5.3378E-02	NA	23770 LBS; 188.02 FT3	9136
				Ra-228	Th-227	Th-228	Th-230					
				Th-232	U-234	U-Nat						
Soil,DOT Non-Regulated, containing Radionuclides	NA	NA	Solid / OXIDES	Ac-227	Pa-231	Ra-223	Ra-226	7.8494E+00	2.1215E-01	NA	17280 LBS; 136.51 FT3	9139
				Ra-228	Th-227	Th-228	Th-230					
				Th-232	U-234	U-Nat						
Soil,DOT Non-Regulated, containing Radionuclides	NA	NA	Solid / OXIDES	Ac-227	Pa-231	Ra-223	Ra-226	3.0720E+01	8.3026E-01	NA	8880 LBS; 69.84 FT3	9140
				Ra-228	Th-227	Th-228	Th-230					
				Th-232	U-234	U-Nat						
Soil,DOT Non-Regulated, containing Radionuclides	NA	NA	Solid / OXIDES	Ac-227	Pa-231	Ra-223	Ra-226	2.5005E+00	6.7581E-02	NA	17750 LBS; 140.24 FT3	9143
				Ra-228	Th-227	Th-228	Th-230					
				Th-232	U-234	U-Nat						
Soil,DOT Non-Regulated, containing Radionuclides	NA	NA	Solid / OXIDES	Ac-227	Pa-231	Ra-223	Ra-226	4.6987E+01	1.2699E+00	NA	13540 LBS; 106.83 FT3	9154
				Ra-228	Th-227	Th-228	Th-230					
				Th-232	U-234	U-Nat						
Soil,DOT Non-Regulated, containing Radionuclides	NA	NA	Solid / OXIDES	Ac-227	Pa-231	Ra-223	Ra-226	2.9619E+00	8.0052E-02	NA	20060 LBS; 158.57 FT3	9181
				Ra-228	Th-227	Th-228	Th-230					

FORM 540A

Envirocare of Utah, Inc.

UNIFORM LOW-LEVEL RADIOACTIVE WASTE MANIFEST

SHIPPING PAPER (CONTINUATION)

8. MANIFEST NUMBER
(Use this number on all continuation pages)
0840-01-979

11. U.S. DEPARTMENT OF TRANSPORTATION DESCRIPTION (Including proper shipping name, hazard class, UN ID number, and any additional information)	12. DOT LABEL "RADIOACTIVE"	13. TRANSPORT INDEX	14. PHYSICAL AND CHEMICAL FORM	15. INDIVIDUAL RADIONUCLIDES				16. TOTAL PACKAGE ACTIVITY MBq	mCi	17. LSA/SCO CLASS	18. TOTAL WEIGHT OR VOLUME (Use appropriate units)	19. IDENTIFICATION NUMBER OF PACKAGE
Soil,DOT Non-Regulated, containing Radionuclides	NA	NA	Solid / OXIDES	Th-232	U-234	U-Nat		2.9619E+00	8.0052E-02	NA	20060 LBS; 158.57 FT3	9181
Soil,DOT Non-Regulated, containing Radionuclides	NA	NA	Solid / OXIDES	Ac-227	Pa-231	Ra-223	Ra-226	9.5658E+00	2.5854E-01	NA	18670 LBS; 147.54 FT3	9201
				Ra-228	Th-227	Th-228	Th-230					
				Th-232	U-234	U-Nat						

FORM 540A (04-03)

FORM 541

Envirocare of Utah, Inc.

UNIFORM LOW-LEVEL RADIOACTIVE WASTE MANIFEST

CONTAINER AND WASTE DESCRIPTION

Additional Nuclear Regulatory Commission (NRC) Requirements for Control, Transfer and Disposal of Radioactive Waste

1. MANIFEST TOTALS

NUMBER OF PACKAGES/ DISPOSAL CONTAINERS	NET WASTE VOLUME	NET WASTE WEIGHT	SPECIAL NUCLEAR MATERIAL (grams) U-233	U-235	Pu	Total
11	m3 42.7117 / ft3 1508.3500	kg 86205.2357 / ton 95.0250	NP	NP	NP	NP

ACTIVITY	ALL NUCLIDES	TRITIUM	C-14	Tc-99	I-129	SOURCE (kg)	
MBq	1.1697E+02	NP	NP	NP	NP	(kg)	3.0946E+00
mCi	3.1613E+00	NP	NP	NP	NP	(tons)	3.4112E-03

2. MANIFEST NUMBER 0840-01-979

3. PAGE 1 OF 6 PAGE(S)

4. SHIPPER NAME GTEOSI

SHIPMENT ID NUMBER 0840-01-979

5. CONTAINER IDENTIFICATION NUMBER/ GENERATOR ID NUMBER(S)	6. CONTAINER DESCRIPTION (See Note 1 & Note 1A)	7. VOLUME (m3) / (ft3)	8. WASTE AND CONTAINER WEIGHT (kg) / (ton)	9. SURFACE RADIATION LEVEL (mSv/hr) / (mrem/hr)	10. SURFACE CONTAMINATION (MBq/100 cm2) / (dpm/100cm2) ALPHA	BETA-GAMMA	11. WASTE DESCRIPTOR (See Note 2 & Note 2A)	12. APPROXIMATE WASTE VOLUME(S) IN CONTAINER (m3) / (FT3)	13. SOLIDIFICATION OR STABILIZATION MEDIA (See Note 3)	14. CHEMICAL DESCRIPTION: CHEMICAL FORM/ CHELATING AGENT	WEIGHT % CHELATING AGENT IF > 0.1%	15. RADIOLOGICAL DESCRIPTION: RADIONUCLIDES		pCi/gm	MBq	mCi	16. WASTE CLASSIFICATION AS-Class A Stable AU-Class A Unstable B-Class B C-Class C
9122/GTEOSI	19 Strong Tight Container Loaded in Gondola	2.8048	5697.1205	0.0001	<3.6740E-06	<3.6740E-05	22,59-CONCRETE,59 -MISC DEBRIS-HJ	2.8048	100	OXIDES/NONE	0.00	Ac-227		8.29000E-02	1.7379E-02	4.6971E-04	AU
												Pa-231		2.01000E-01	(4.2139E-02)	(1.1389E-03)	
												Ra-223		1.41400E-01	2.9643E-02	8.0116E-04	
		99.0500	6.2800	0.0100	<2.2000E+02	<2.2000E+03		99.0500				Ra-226		1.63495E-01	3.4275E-02	9.2635E-04	
												Ra-228		5.78298E-01	1.2123E-01	3.2766E-03	
												Th-227	[1.5152E-14 kg]	8.29000E-02	1.7379E-02	4.6971E-04	
												Th-228	[4.5822E-12 kg]	6.63163E-01	1.3902E-01	3.7574E-03	
												Th-230	[8.1620E-08 kg]	3.02513E-01	6.3418E-02	1.7140E-03	
												Th-232	[2.9787E-02 kg]	5.78298E-01	1.2123E-01	3.2766E-03	
												U-234	[3.3231E-06 kg]	3.63635E+00	7.6231E-01	2.0603E-02	
												U-Nat	[4.8100E-02 kg]	6.02747E+00	1.2636E+00	3.4151E-02	
												Subtotal			2.5695E+00	6.9446E-02	
												Total			2.5695E+00	6.9446E-02	
												Source	[7.7891E-02 kg]				
9125/GTEOSI	19 Strong Tight Container Loaded in Gondola	3.9734	8055.8010	0.0001	<3.6740E-06	<3.6740E-05	22,59-CONCRETE,59 -MISC DEBRIS-HJ	3.9734	100	OXIDES/NONE	0.00	Ac-227		4.31000E-02	(1.2800E-02)	(3.4595E-04)	AU
												Pa-231		2.46300E-01	7.3149E-02	1.9770E-03	
												Ra-223		3.94300E-02	(1.1710E-02)	(3.1649E-04)	
		140.3200	8.8800	0.0100	<2.2000E+02	<2.2000E+03		140.3200				Ra-226		1.30898E-01	3.8876E-02	1.0507E-03	
												Ra-228		6.07943E-01	1.8055E-01	4.8798E-03	
												Th-227	[1.1160E-14 kg]	4.31000E-02	(1.2800E-02)	(3.4595E-04)	
												Th-228	[7.4514E-12 kg]	7.61229E-01	2.2608E-01	6.1102E-03	
												Th-230	[1.2156E-07 kg]	3.18021E-01	9.4450E-02	2.5527E-03	
												Th-232	[4.4362E-02 kg]	6.07943E-01	1.8055E-01	4.8798E-03	

Note 1: Container Description Codes. For containers/ waste requiring disposal in approved structural over-packs the numerical code must be followed by "-OP."

1. Wooden Box or Crate
2. Metal Box
3. Plastic Drum or Pail
4. Metal Drum or Pail
5. Metal Tank or Liner
6. Concrete Tank or Liner
7. Polyethlene Tank or Liner
8. Fiberglass Tank or Liner
9. Demineralizer
10. Gas Cylinder
11. Bulk, Unpackaged Waste
12. Unpackaged Components
13. High Integrity Container
19. Other. Describe in Item 6, or additional page

Note 1A: Bulk Packaging Description Codes. (Choose one code as may be applicable.)

A Gondola
B Intermodal
C End-Dump
D Roll-off
E Seavan

NOTE 2: Waste Descriptor Codes. (Choose up to three which predominate by volume.)

20. Charcoal
21. Incinerator Ash
22. Soil
23. Gas
24. Oil
25. Aqueous Liquid
26. Filter Media
27. Mechanical Filter
28. EPA or State Hazardous
29. Demolition Rubble
30. Cation Ion-exchange Media
31. Anion Ion-exchange Media
32. Mixed Bed Ion-exchange Media
33. Contaminated Equipment
34. Organic Liquid (except oil)
35. Glassware or Labware
36. Sealed Source/Device
37. Paint or Plating
38. Evaporator Bottoms/Sludges/ Concentrates
39. Compactible Trash
40. Noncompactible Trash
41. Animal Carcass
42. Biological Material (except animal carcass)
43. Activated Material
59. Other. Describe in item 11, or additional page

NOTE 2A: Specific Waste Descriptions (Choose all applicable codes.)

G Dewatered
H Solid
I Combustible
J Non-combustible
K Air Filtration Filters
L Asbestos

Note3: Solidification and Stabilization Media Codes. (Choose up to three which predominate by volume.) For media meeting disposal site structural stability requirements, the numerical code must be followed by "-S." and the media vendor and brand name must also be identified in Item 13. Code 100=NONE REQUIRED.

Solidification

90. Cement
91. Concrete (encapsulation)
92. Bitumen
93. Vinyl Chloride
94. Vinyl Ester Styrene
99. Other. Describe in item 13, or additional page
100. None Required.

FORM 541A

UNIFORM LOW-LEVEL RADIOACTIVE WASTE MANIFEST

Envirocare of Utah, Inc.

2. MANIFEST NUMBER 0840-01-979

CONTAINER AND WASTE DESCRIPTION (CONTINUATION)

DISPOSAL CONTAINER DESCRIPTION							WASTE DESCRIPTION FOR EACH WASTE TYPE IN CONTAINER									
							PHYSICAL DESCRIPTION			14. CHEMICAL DESCRIPTION		15. RADIOLOGICAL DESCRIPTION				16. WASTE CLASSIFICATION AS-Class A Stable AU-Class A Unstable B-Class B C-Class C
5. CONTAINER IDENTIFICATION NUMBER/ GENERATOR ID NUMBER(S)	6. CONTAINER DESCRIPTION (See Note 1 & Note 1A)	7. VOLUME (m3) / (ft3)	8. WASTE AND CONTAINER WEIGHT (kg) / (ton)	9. SURFACE RADIATION LEVEL (mSv/hr) / (mrem/hr)	10. SURFACE CONTAMINATION (MBq/100 cm2) / (dpm/100cm2) ALPHA	BETA-GAMMA	11. WASTE DESCRIPTOR (See Note 2 & Note 2A)	12. APPROXIMATE WASTE VOLUME(S) IN CONTAINER (m3) / (FT3)	13. SOLIDIFICATION OR STABILIZATION MEDIA (See Note 3)	CHEMICAL FORM/ CHELATING AGENT	WEIGHT % CHELATING AGENT IF > 0.1%	INDIVIDUAL RADIONUCLIDES AND ACTIVITY (MBq) AND CONTAINER TOTAL; OR CONTAINER TOTAL ACTIVITY AND RADIONUCLIDE PERCENT: RADIONUCLIDES	pCi/gm	MBq	mCi	
												U-234 [1.1611E-05 kg]	8.96877E+00	2.6636E+00	7.1990E-02	
												U-Nat [1.6341E-01 kg]	1.44547E+01	4.2927E+00	1.1602E-01	
												Subtotal		7.7500E+00	2.0946E-01	
												Total		7.7500E+00	2.0946E-01	
												Source [2.0779E-01 kg]				
9127/GTEOSI	19 Strong Tight Container Loaded in Gondola	4.1374	8386.9235	0.0001	<3.6740E-06	<3.6740E-05	22,59-CONCRETE,59 -MISC DEBRIS-HJ	4.1374	100	OXIDES/NONE	0.00	Ac-227	5.73300E-02	1.7729E-02	4.7917E-04	AU
		146.1100	9.2450	0.0100	<2.2000E+02	<2.2000E+03		146.1100				Pa-231	5.35900E-01	1.6573E-01	4.4791E-03	
												Ra-223	9.78200E-02	3.0251E-02	8.1759E-04	
												Ra-226	2.54027E-01	7.8558E-02	2.1232E-03	
												Ra-228	6.80993E-01	2.1060E-01	5.6918E-03	
												Th-227 [1.5457E-14 kg]	5.73300E-02	1.7729E-02	4.7917E-04	
												Th-228 [6.4871E-12 kg]	6.36434E-01	1.9682E-01	5.3194E-03	
												Th-230 [1.4178E-07 kg]	3.56234E-01	1.1017E-01	2.9775E-03	
												Th-232 [5.1744E-02 kg]	6.80993E-01	2.1060E-01	5.6918E-03	
												U-234 [2.6576E-06 kg]	1.97135E+00	6.0965E-01	1.6477E-02	
												U-Nat [3.9117E-02 kg]	3.32284E+00	1.0276E+00	2.7773E-02	
												Subtotal		2.6754E+00	7.2309E-02	
												Total		2.6754E+00	7.2309E-02	
												Source [9.0863E-02 kg]				
9135/GTEOSI	19 Strong Tight Container Loaded in Gondola	4.9645	10056.1435	0.0001	<3.6740E-06	<3.6740E-05	22,59-CONCRETE,59 -MISC DEBRIS-HJ	4.9645	100	OXIDES/NONE	0.00	Ac-227	6.20000E-02	(2.3006E-02)	(6.2179E-04)	AU
		175.3200	11.0850	0.0100	<2.2000E+02	<2.2000E+03		175.3200				Pa-231	2.40700E-01	(8.9318E-02)	(2.4140E-03)	
												Ra-223	5.63200E-02	(2.0899E-02)	(5.6483E-04)	
												Ra-226	1.77217E-01	6.5760E-02	1.7773E-03	
												Ra-228	5.73191E-01	2.1269E-01	5.7485E-03	
												Th-227 [2.0058E-14 kg]	6.20000E-02	(2.3006E-02)	(6.2179E-04)	
												Th-228 [6.8163E-12 kg]	5.57331E-01	2.0681E-01	5.5894E-03	
												Th-230 [1.4319E-07 kg]	2.99842E-01	1.1126E-01	3.0071E-03	
												Th-232 [5.2259E-02 kg]	5.73191E-01	2.1269E-01	5.7485E-03	
												U-234 [1.8314E-06 kg]	1.13220E+00	4.2014E-01	1.1355E-02	
												U-Nat [3.0309E-02 kg]	2.14574E+00	7.9620E-01	2.1519E-02	
												Subtotal		2.0256E+00	5.4745E-02	
												Total		2.0256E+00	5.4745E-02	

FORM 541A

UNIFORM LOW-LEVEL RADIOACTIVE WASTE MANIFEST

CONTAINER AND WASTE DESCRIPTION (CONTINUATION)

Envirocare of Utah, Inc.

2. MANIFEST NUMBER 0840-01-979

DISPOSAL CONTAINER DESCRIPTION							WASTE DESCRIPTION FOR EACH WASTE TYPE IN CONTAINER									
							PHYSICAL DESCRIPTION			14. CHEMICAL DESCRIPTION		15. RADIOLOGICAL DESCRIPTION				16. WASTE CLASSIFICATION AS-Class A Stable AU-Class A Unstable B-Class B C-Class C
5. CONTAINER IDENTIFICATION NUMBER/ GENERATOR ID NUMBER(S)	6. CONTAINER DESCRIPTION (See Note 1 & Note 1A)	7. VOLUME (m3)/(ft3)	8. WASTE AND CONTAINER WEIGHT (kg)/(ton)	9. SURFACE RADIATION LEVEL (mSv/hr)/(mrem/hr)	10. SURFACE CONTAMINATION (MBq/100 cm2)/(dpm/100cm2) ALPHA	BETA-GAMMA	11. WASTE DESCRIPTOR (See Note 2 & Note 2A)	12. APPROXIMATE WASTE VOLUME(S) IN CONTAINER (m3)/(FT3)	13. SOLIDIFICATION OR STABILIZATION MEDIA (See Note 3)	CHEMICAL FORM/ CHELATING AGENT	WEIGHT % CHELATING AGENT IF > 0.1%	INDIVIDUAL RADIONUCLIDES AND ACTIVITY (MBq) AND CONTAINER TOTAL; OR CONTAINER TOTAL ACTIVITY AND RADIONUCLIDE PERCENT: RADIONUCLIDES	pCi/gm	MBq	mCi	
												Source [8.2570E-02 kg]				
9136/GTEOSI	19 Strong Tight Container Loaded in Gondola	5.3241	10781.8913	0.0001	<3.6740E-06	<3.6740E-05	22,59-CONCRETE,59 -MISC DEBRIS-HJ	5.3241	100	OXIDES/NONE	0.00	Ac-227	1.20400E-01	4.7911E-02	1.2949E-03	AU
		188.0200	11.8850	0.0100	<2.2000E+02	<2.2000E+03		188.0200				Pa-231	5.20000E-01	2.0693E-01	5.5927E-03	
												Ra-223	1.59500E-01	6.3474E-02	1.7155E-03	
												Ra-226	2.51849E-01	1.0022E-01	2.7087E-03	
												Ra-228	6.18865E-01	2.4628E-01	6.6561E-03	
												Th-227 [4.1772E-14 kg]	1.20400E-01	4.7911E-02	1.2949E-03	
												Th-228 [1.0200E-11 kg]	7.77663E-01	3.0947E-01	8.3640E-03	
												Th-230 [1.6580E-07 kg]	3.23734E-01	1.2883E-01	3.4819E-03	
												Th-232 [6.0510E-02 kg]	6.18865E-01	2.4628E-01	6.6561E-03	
												U-234 [7.2847E-07 kg]	4.19934E-01	(1.6711E-01)	(4.5165E-03)	
												U-Nat [1.5630E-02 kg]	1.03179E+00	4.1059E-01	1.1097E-02	
												Subtotal		1.8079E+00	4.8862E-02	
												Total		1.8079E+00	4.8862E-02	
												Source [7.6140E-02 kg]				
9139/GTEOSI	19 Strong Tight Container Loaded in Gondola	3.8655	7838.0767	0.0001	<3.6740E-06	<3.6740E-05	22,59-CONCRETE,59 -MISC DEBRIS-HJ	3.8655	100	OXIDES/NONE	0.00	Ac-227	9.65000E-02	2.7881E-02	7.5355E-04	AU
		136.5100	8.6400	0.0100	<2.2000E+02	<2.2000E+03		136.5100				Pa-231	2.06000E-01	(5.9518E-02)	(1.6086E-03)	
												Ra-223	4.06900E-02	(1.1756E-02)	(3.1774E-04)	
												Ra-226	2.58093E-01	7.4570E-02	2.0154E-03	
												Ra-228	1.10085E+00	3.1806E-01	8.5963E-03	
												Th-227 [2.4308E-14 kg]	9.65000E-02	2.7881E-02	7.5355E-04	
												Th-228 [1.3069E-11 kg]	1.37238E+00	3.9653E-01	1.0717E-02	
												Th-230 [2.1413E-07 kg]	5.75866E-01	1.6638E-01	4.4968E-03	
												Th-232 [7.8148E-02 kg]	1.10085E+00	3.1806E-01	8.5963E-03	
												U-234 [1.0803E-05 kg]	8.57716E+00	2.4781E+00	6.6977E-02	
												U-Nat [1.5114E-01 kg]	1.37425E+01	3.9705E+00	1.0731E-01	
												Subtotal		7.7780E+00	2.1022E-01	
												Total		7.7780E+00	2.1022E-01	
												Source [2.2930E-01 kg]				

FORM 541A

UNIFORM LOW-LEVEL RADIOACTIVE WASTE MANIFEST

CONTAINER AND WASTE DESCRIPTION (CONTINUATION)

Envirocare of Utah, Inc.

2. MANIFEST NUMBER 0840-01-979

DISPOSAL CONTAINER DESCRIPTION							WASTE DESCRIPTION FOR EACH WASTE TYPE IN CONTAINER									
							PHYSICAL DESCRIPTION			14. CHEMICAL DESCRIPTION		15. RADIOLOGICAL DESCRIPTION				16. WASTE CLASSIFICATION AS-Class A Stable AU-Class A Unstable B-Class B C-Class C
5. CONTAINER IDENTIFICATION NUMBER/ GENERATOR ID NUMBER(S)	6. CONTAINER DESCRIPTION (See Note 1 & Note 1A)	7. VOLUME (m3) / (ft3)	8. WASTE AND CONTAINER WEIGHT (kg) / (ton)	9. SURFACE RADIATION LEVEL (mSv/hr) / (mrem/hr)	10. SURFACE CONTAMINATION (MBq/100 cm2) / (dpm/100cm2) ALPHA	BETA-GAMMA	11. WASTE DESCRIPTOR (See Note 2 & Note 2A)	12. APPROXIMATE WASTE VOLUME(S) IN CONTAINER (m3) / (FT3)	13. SOLIDIFICATION OR STABILIZATION MEDIA (See Note 3)	CHEMICAL FORM/ CHELATING AGENT	WEIGHT % CHELATING AGENT IF > 0.1%	INDIVIDUAL RADIONUCLIDES AND ACTIVITY (MBq) AND CONTAINER TOTAL; OR CONTAINER TOTAL ACTIVITY AND RADIONUCLIDE PERCENT: RADIONUCLIDES	pCi/gm	MBq	mCi	
9140/GTEOSI	19 Strong Tight Container Loaded in Gondola	1.9776	4027.9005	0.0001	<3.6740E-06	<3.6740E-05	22,59-CONCRETE,59 -MISC DEBRIS-HJ	1.9776	100	OXIDES/NONE	0.00	Ac-227	1.09700E-01	(1.6216E-02)	(4.3827E-04)	AU
		69.8400	4.4400	0.0100	<2.2000E+02	<2.2000E+03		69.8400				Pa-231	1.15900E+00	1.7132E-01	4.6304E-03	
												Ra-223	9.88200E-02	(1.4608E-02)	(3.9481E-04)	
												Ra-226	2.43137E-01	3.5941E-02	9.7138E-04	
												Ra-228	1.40156E+00	2.0718E-01	5.5995E-03	
												Th-227 [1.4138E-14 kg]	1.09700E-01	(1.6216E-02)	(4.3827E-04)	
												Th-228 [6.6839E-12 kg]	1.37184E+00	2.0279E-01	5.4808E-03	
												Th-230 [1.3948E-07 kg]	7.33170E-01	1.0838E-01	2.9292E-03	
												Th-232 [5.0905E-02 kg]	1.40156E+00	2.0718E-01	5.5995E-03	
												U-234 [4.9926E-05 kg]	7.74777E+01	1.1453E+01	3.0954E-01	
												U-Nat [6.9612E-01 kg]	1.23709E+02	1.8287E+01	4.9424E-01	
												Subtotal		3.0673E+01	8.2899E-01	
												Total		3.0673E+01	8.2899E-01	
												Source [7.4707E-01 kg]				
9143/GTEOSI	19 Strong Tight Container Loaded in Gondola	3.9712	8051.2651	0.0001	<3.6740E-06	<3.6740E-05	22,59-CONCRETE,59 -MISC DEBRIS-HJ	3.9712	100	OXIDES/NONE	0.00	Ac-227	6.92400E-02	2.0552E-02	5.5546E-04	AU
		140.2400	8.8750	0.0100	<2.2000E+02	<2.2000E+03		140.2400				Pa-231	4.58800E-01	1.3618E-01	3.6806E-03	
												Ra-223	5.24100E-02	(1.5556E-02)	(4.2044E-04)	
												Ra-226	2.58456E-01	7.6716E-02	2.0734E-03	
												Ra-228	7.08511E-01	2.1030E-01	5.6838E-03	
												Th-227 [1.7918E-14 kg]	6.92400E-02	2.0552E-02	5.5546E-04	
												Th-228 [8.0091E-12 kg]	8.18660E-01	2.4299E-01	6.5674E-03	
												Th-230 [1.4158E-07 kg]	3.70629E-01	1.1001E-01	2.9733E-03	
												Th-232 [5.1671E-02 kg]	7.08511E-01	2.1030E-01	5.6838E-03	
												U-234 [2.3370E-06 kg]	1.80619E+00	5.3613E-01	1.4490E-02	
												U-Nat [3.5067E-02 kg]	3.10358E+00	9.2123E-01	2.4898E-02	
												Subtotal		2.4850E+00	6.7161E-02	
												Total		2.4850E+00	6.7161E-02	
												Source [8.6740E-02 kg]				
9154/GTEOSI	19 Strong Tight Container Loaded in Gondola	3.0251	6141.6411	0.0001	<3.6740E-06	<3.6740E-05	22,59-CONCRETE,59 -MISC DEBRIS-HJ	3.0251	100	OXIDES/NONE	0.00	Ac-227	1.09700E-01	(2.4803E-02)	(6.7036E-04)	AU
		106.8300	6.7700	0.0100	<2.2000E+02	<2.2000E+03		106.8300				Pa-231	1.15900E+00	2.6205E-01	7.0825E-03	
												Ra-223	9.88200E-02	(2.2343E-02)	(6.0387E-04)	
												Ra-226	2.43137E-01	5.4975E-02	1.4858E-03	
												Ra-228	1.40156E+00	3.1689E-01	8.5647E-03	

FORM 541A

UNIFORM LOW-LEVEL RADIOACTIVE WASTE MANIFEST

CONTAINER AND WASTE DESCRIPTION (CONTINUATION)

Envirocare of Utah, Inc.

2. MANIFEST NUMBER 0840-01-979

DISPOSAL CONTAINER DESCRIPTION							WASTE DESCRIPTION FOR EACH WASTE TYPE IN CONTAINER									
							PHYSICAL DESCRIPTION			14. CHEMICAL DESCRIPTION		15. RADIOLOGICAL DESCRIPTION				16. WASTE CLASSIFICATION AS-Class A Stable AU-Class A Unstable B-Class B C-Class C
5. CONTAINER IDENTIFICATION NUMBER/ GENERATOR ID NUMBER(S)	6. CONTAINER DESCRIPTION (See Note 1 & Note 1A)	7. VOLUME (m3)/(ft3)	8. WASTE AND CONTAINER WEIGHT (kg)/(ton)	9. SURFACE RADIATION LEVEL (mSv/hr)/(mrem/hr)	10. SURFACE CONTAMINATION (MBq/100 cm2)/(dpm/100cm2) ALPHA	BETA-GAMMA	11. WASTE DESCRIPTOR (See Note 2 & Note 2A)	12. APPROXIMATE WASTE VOLUME(S) IN CONTAINER (m3)/(FT3)	13. SOLIDIFICATION OR STABILIZATION MEDIA (See Note 3)	CHEMICAL FORM/ CHELATING AGENT	WEIGHT % CHELATING AGENT IF > 0.1%	INDIVIDUAL RADIONUCLIDES AND ACTIVITY (MBq) AND CONTAINER TOTAL; OR CONTAINER TOTAL ACTIVITY AND RADIONUCLIDE PERCENT: RADIONUCLIDES	pCi/gm	MBq	mCi	
												Th-227 [2.1625E-14 kg]	1.09700E-01	(2.4803E-02)	(6.7036E-04)	
												Th-228 [1.0223E-11 kg]	1.37184E+00	3.1017E-01	8.3831E-03	
												Th-230 [2.1335E-07 kg]	7.33170E-01	1.6577E-01	4.4803E-03	
												Th-232 [7.7861E-02 kg]	1.40156E+00	3.1689E-01	8.5647E-03	
												U-234 [7.6364E-05 kg]	7.74777E+01	1.7518E+01	4.7345E-01	
												U-Nat [1.0647E+00 kg]	1.23709E+02	2.7971E+01	7.5597E-01	
												Subtotal		4.6916E+01	1.2680E+00	
												Total		4.6916E+01	1.2680E+00	
												Source [1.1427E+00 kg]				
9181/GTEOSI	19 Strong Tight Container Loaded in Gondola	4.4902	9099.0635	0.0001	<3.6740E-06	<3.6740E-05	22,59-CONCRETE,59 -MISC DEBRIS-HJ	4.4902	100	OXIDES/NONE	0.00	Ac-227	5.52100E-02	(1.8530E-02)	(5.0081E-04)	AU
												Pa-231	2.45600E-01	(8.2429E-02)	(2.2278E-03)	
												Ra-223	4.98100E-02	(1.6717E-02)	(4.5182E-04)	
		158.5700	10.0300	0.0070	<2.2000E+02	<2.2000E+03		158.5700				Ra-226	1.16668E-01	3.9157E-02	1.0583E-03	
												Ra-228	2.58440E-01	8.6739E-02	2.3443E-03	
												Th-227 [1.6155E-14 kg]	5.52100E-02	(1.8530E-02)	(5.0081E-04)	
												Th-228 [4.3453E-12 kg]	3.92805E-01	1.3183E-01	3.5631E-03	
												Th-230 [5.8396E-08 kg]	1.35192E-01	4.5373E-02	1.2263E-03	
												Th-232 [2.1312E-02 kg]	2.58440E-01	8.6739E-02	2.3443E-03	
												U-234 [4.0496E-06 kg]	2.76789E+00	9.2896E-01	2.5107E-02	
												U-Nat [5.7362E-02 kg]	4.48983E+00	1.5069E+00	4.0727E-02	
												Subtotal		2.8257E+00	7.6370E-02	
												Total		2.8257E+00	7.6370E-02	
												Source [7.8678E-02 kg]				
9201/GTEOSI	19 Strong Tight Container Loaded in Gondola	4.1779	8468.5701	0.0001	<3.6740E-06	<3.6740E-05	22,59-CONCRETE,59 -MISC DEBRIS-HJ	4.1779	100	OXIDES/NONE	0.00	Ac-227	1.02000E-01	3.1852E-02	8.6087E-04	AU
												Pa-231	2.74300E-01	(8.5659E-02)	(2.3151E-03)	
												Ra-223	5.28200E-02	(1.6494E-02)	(4.4579E-04)	
		147.5400	9.3350	0.0070	<2.2000E+02	<2.2000E+03		147.5400				Ra-226	3.04267E-01	9.5016E-02	2.5680E-03	
												Ra-228	1.13220E+00	3.5356E-01	9.5556E-03	
												Th-227 [2.7770E-14 kg]	1.02000E-01	3.1852E-02	8.6087E-04	
												Th-228 [1.3512E-11 kg]	1.31278E+00	4.0996E-01	1.1080E-02	
												Th-230 [2.3803E-07 kg]	5.92264E-01	1.8495E-01	4.9986E-03	
												Th-232 [8.6869E-02 kg]	1.13220E+00	3.5356E-01	9.5556E-03	

FORM 541A

UNIFORM LOW-LEVEL RADIOACTIVE WASTE MANIFEST

CONTAINER AND WASTE DESCRIPTION (CONTINUATION)

Envirocare of Utah, Inc.

2. MANIFEST NUMBER 0840-01-979

DISPOSAL CONTAINER DESCRIPTION							WASTE DESCRIPTION FOR EACH WASTE TYPE IN CONTAINER									
							PHYSICAL DESCRIPTION			14. CHEMICAL DESCRIPTION		15. RADIOLOGICAL DESCRIPTION				16. WASTE CLASSIFICATION AS-Class A Stable AU-Class A Unstable B-Class B C-Class C
5. CONTAINER IDENTIFICATION NUMBER/ GENERATOR ID NUMBER(S)	6. CONTAINER DESCRIPTION (See Note 1 & Note 1A)	7. VOLUME (m3) / (ft3)	8. WASTE AND CONTAINER WEIGHT (kg) / (ton)	9. SURFACE RADIATION LEVEL (mSv/hr) / (mrem/hr)	10. SURFACE CONTAMINATION (MBq/100 cm2) / (dpm/100cm2) ALPHA	BETA-GAMMA	11. WASTE DESCRIPTOR (See Note 2 & Note 2A)	12. APPROXIMATE WASTE VOLUME(S) IN CONTAINER (m3) / (FT3)	13. SOLIDIFICATION OR STABILIZATION MEDIA (See Note 3)	CHEMICAL FORM/ CHELATING AGENT	WEIGHT % CHELATING AGENT IF > 0.1%	INDIVIDUAL RADIONUCLIDES AND ACTIVITY (MBq) AND CONTAINER TOTAL; OR CONTAINER TOTAL ACTIVITY AND RADIONUCLIDE PERCENT: RADIONUCLIDES	pCi/gm	MBq	mCi	
												U-234 [1.3357E-05 kg]	9.81237E+00	3.0642E+00	8.2815E-02	
												U-Nat [1.8800E-01 kg]	1.58155E+01	4.9388E+00	1.3348E-01	
												Subtotal		9.4638E+00	2.5577E-01	
												Total		9.4638E+00	2.5577E-01	
												Source [2.7488E-01 kg]				
Shipment Totals		42.7117	86604.3968									Source [3.0946E+00 kg]		1.1697E+02	3.1613E+00	
		1508.3500	95.4650													

Envirocare of Utah, Inc.

ADDITIONAL NOTES

Manifest Number
0840-01-979
PAGE 1

New York State Waste Transporter Part 364 permit No. 4A-288
New York State Waste Transporter Part 381 permit Number 4A-288

UNIFORM LOW-LEVEL RADIOACTIVE WASTE MANIFEST
ISOTOPES REPORT

For Manifest # 0840-01-979
Envirocare of Utah, Inc.

	Total Activity		
Isotope	(MBq)	(mCi)	(Ci)
Ac-227	2.5866E-01	6.9909E-03	6.9909E-06
Pa-231	1.3744E+00	3.7147E-02	3.7147E-05
Ra-223	2.5345E-01	6.8500E-03	6.8500E-06
Ra-226	6.9406E-01	1.8758E-02	1.8758E-05
Ra-228	2.4641E+00	6.6597E-02	6.6597E-05
Th-227	2.5866E-01	6.9909E-03	6.9909E-06
Th-228	2.7724E+00	7.4931E-02	7.4931E-05
Th-230	1.2890E+00	3.4838E-02	3.4838E-05
Th-232	2.4641E+00	6.6597E-02	6.6597E-05
U-234	4.0601E+01	1.0973E+00	1.0973E-03
U-Nat	6.5386E+01	1.7672E+00	1.7672E-03

FORM 540 — Envirocare of Utah, Inc.

UNIFORM LOW-LEVEL RADIOACTIVE WASTE MANIFEST

SHIPPING PAPER

1. EMERGENCY TELEPHONE NUMBER (Include Area Code): 1-800-424-9300

ORGANIZATION: Chemtrec

2. IS THIS AN "EXCLUSIVE USE" SHIPMENT? ☐ YES ☑ NO

3. TOTAL NUMBER OF PACKAGES IDENTIFIED ON THIS MANIFEST =====> 11

4. DOES EPA REGULATED WASTE REQUIRING A MANIFEST ACCOMPANY THIS SHIPMENT? ☐ YES ☑ NO
If "Yes," provide Manifest Number =====>

EPA MANIFEST NUMBER

5. SHIPPER -- NAME AND FACILITY
GTEOSI
140 Cantiague Rock RD
Hicksville, NY 11801

Utah Generator Site Access Permit No.: 020 500 1352

SHIPMENT NUMBER: MRMX-002070

CONTACT: Jean Agostinelli

6. CARRIER -- Name and Address
Priority Transport Services, Inc.
391 Anthony Street
Schenectady, NY 12308

CONTACT: Dispatch

SIGNATURE -- Authorized carrier acknowledging waste receipt

SHIPPER I.D. NUMBER: 0840-01-979

☐ COLLECTOR
☐ PROCESSOR
☑ GENERATOR TYPE (Specify) I

TELEPHONE NUMBER (Include Area Code): 516-932-9157

EPA I.D. NUMBER: NYR000104976

SHIPPING DATE: 05/11/2005

TELEPHONE (Include Area Code): 800-235-0069

DATE: 5-11-05

7. FORM 540 AND 540A — PAGE 1 OF 3 PAGE(S)
FORM 541 AND 541A — 6 PAGE(S)
FORM 542 AND 542A — None PAGE(S)
ADDITIONAL INFORMATION — None PAGE(S)

8. MANIFEST NUMBER (Use this number on all continuation pages): 0840-01-979

9. CONSIGNEE - Name and Facility
Envirocare of Utah, Inc.
Clive Disposal Site (Bulk Waste Facility)
Interstate 80, Exit 49
Clive, UT 84029

L84525

SIGNATURE -- Authorized consignee acknowledging waste receipt

CONTACT: Shipping and Receiving

TELEPHONE (Include Area Code): (435)884-0155

DATE: 5-25-05

10. CERTIFICATION
This is to certify that the herein-named materials are properly classified, described, packaged, marked, and labeled and are in proper condition for transportation according to the applicable regulations of the Department of Transportation. This also certifies that the materials are classified, packaged, marked, and labeled and are in proper condition for transportation and disposal as described in accordance with the requirements of 10 CFR Parts 20 and 61, or equivalent state regulations.

AUTHORIZED SIGNATURE | TITLE: Broker | DATE: 5-11-05

11. U.S. DEPARTMENT OF TRANSPORTATION DESCRIPTION (Including proper shipping name, hazard class, UN ID number, and any additional information)	12. DOT LABEL "RADIOACTIVE"	13. TRANSPORT INDEX	14. PHYSICAL AND CHEMICAL FORM	15. INDIVIDUAL RADIONUCLIDES				16. TOTAL PACKAGE ACTIVITY MBq	mCi	17. LSA/SCO CLASS	18. TOTAL WEIGHT OR VOLUME (Use appropriate units)	19. IDENTIFICATION NUMBER OF PACKAGE
Soil,DOT Non-Regulated, containing Radionuclides	NA	NA	Solid / OXIDES	Ac-227	Pa-231	Ra-223	Ra-226	2.6116E+00	7.0585E-02	NA	12560 LBS; 99.05 FT3	9122
				Ra-228	Th-227	Th-228	Th-230					
				Th-232	U-234	U-Nat						
Soil,DOT Non-Regulated, containing Radionuclides	NA	NA	Solid / OXIDES	Ac-227	Pa-231	Ra-223	Ra-226	7.7875E+00	2.1047E-01	NA	17760 LBS; 140.32 FT3	9125
				Ra-228	Th-227	Th-228	Th-230					
				Th-232	U-234	U-Nat						
Soil,DOT Non-Regulated, containing Radionuclides	NA	NA	Solid / OXIDES	Ac-227	Pa-231	Ra-223	Ra-226	2.6754E+00	7.2308E-02	NA	18490 LBS; 146.11 FT3	9127
				Ra-228	Th-227	Th-228	Th-230					
				Th-232	U-234	U-Nat						

FOR CONSIGNEE USE ONLY

___ Record Waste Description Inadequate
___ Contamination or Leakage Detected
___ Unexpected Exposure Rates Detected
___ Labels, Markings, etc. Inadequate
___ Container Integrity Inadequate
___ Other
✓ No Violations Detected on this Shipment

20. TERMS AND CONDITIONS

A. HAZARDOUS MATERIALS: Generator represents & warrants that Waste Material __ is (or) ✓ is not a hazardous waste as defined in 40 CFR 261. Where the material is a hazardous waste, this shipment is also accompanied by a separate and completed hazardous waste manifest, along with the appropriate land-disposal restriction notice and/or certification as required by 40 CFR 268.1.

B. TITLE: Upon acceptance at the disposal site by Envirocare of Utah, Inc., and all appropriate regulatory authorities, title to the Waste Material which conforms to Generator's representations herein shall thereupon transfer from Generator and be vested in Envirocare of Utah, Inc.

C. WASTE MATERIAL: Generator represents and warrants that all data set forth in this (UNIFORM LOW-LEVEL RADIOACTIVE WASTE MANIFEST) are true and correct in all respects and in accordance with all applicable governmental laws, rules, regulations and Envirocare of Utah Inc.'s facility license.

D. INDEMNIFICATION: Generator agrees to indemnify Envirocare of Utah, Inc., its officers, employees and agents against all losses and liability whatsoever if such losses or liability results from the failure of the Waste Material to conform in all material respects to the data supplied on the (UNIFORM LOW-LEVEL RADIOACTIVE WASTE MANIFEST,) or if this shipment fails to meet the standards prescribed by the Department of Transportation or any governmental agency having jurisdiction over such matters.

FORM 540 (04-03)

FORM 540A

Envirocare of Utah, Inc.

8. MANIFEST NUMBER
(Use this number on all continuation pages)
0840-01-979

UNIFORM LOW-LEVEL RADIOACTIVE WASTE MANIFEST

SHIPPING PAPER (CONTINUATION)

11. U.S. DEPARTMENT OF TRANSPORTATION DESCRIPTION (Including proper shipping name, hazard class, UN ID number, and any additional information)	12. DOT LABEL "RADIOACTIVE"	13. TRANSPORT INDEX	14. PHYSICAL AND CHEMICAL FORM	15. INDIVIDUAL RADIONUCLIDES				16. TOTAL PACKAGE ACTIVITY MBq	mCi	17. LSA/SCO CLASS	18. TOTAL WEIGHT OR VOLUME (Use appropriate units)	19. IDENTIFICATION NUMBER OF PACKAGE
Soil,DOT Non-Regulated, containing Radionuclides	NA	NA	Solid / OXIDES	Ac-227	Pa-231	Ra-223	Ra-226	2.1818E+00	5.8967E-02	NA	22170 LBS; 175.32 FT3	9135
				Ra-228	Th-227	Th-228	Th-230					
				Th-232	U-234	U-Nat						
Soil,DOT Non-Regulated, containing Radionuclides	NA	NA	Solid / OXIDES	Ac-227	Pa-231	Ra-223	Ra-226	1.9750E+00	5.3378E-02	NA	23770 LBS; 188.02 FT3	9136
				Ra-228	Th-227	Th-228	Th-230					
				Th-232	U-234	U-Nat						
Soil,DOT Non-Regulated, containing Radionuclides	NA	NA	Solid / OXIDES	Ac-227	Pa-231	Ra-223	Ra-226	7.8494E+00	2.1215E-01	NA	17280 LBS; 136.51 FT3	9139
				Ra-228	Th-227	Th-228	Th-230					
				Th-232	U-234	U-Nat						
Soil,DOT Non-Regulated, containing Radionuclides	NA	NA	Solid / OXIDES	Ac-227	Pa-231	Ra-223	Ra-226	3.0720E+01	8.3026E-01	NA	8880 LBS; 69.84 FT3	9140
				Ra-228	Th-227	Th-228	Th-230					
				Th-232	U-234	U-Nat						
Soil,DOT Non-Regulated, containing Radionuclides	NA	NA	Solid / OXIDES	Ac-227	Pa-231	Ra-223	Ra-226	2.5005E+00	6.7581E-02	NA	17750 LBS; 140.24 FT3	9143
				Ra-228	Th-227	Th-228	Th-230					
				Th-232	U-234	U-Nat						
Soil,DOT Non-Regulated, containing Radionuclides	NA	NA	Solid / OXIDES	Ac-227	Pa-231	Ra-223	Ra-226	4.6987E+01	1.2699E+00	NA	13540 LBS; 106.83 FT3	9154
				Ra-228	Th-227	Th-228	Th-230					
				Th-232	U-234	U-Nat						
Soil,DOT Non-Regulated, containing Radionuclides	NA	NA	Solid / OXIDES	Ac-227	Pa-231	Ra-223	Ra-226	2.9619E+00	8.0052E-02	NA	20060 LBS; 158.57 FT3	9181
				Ra-228	Th-227	Th-228	Th-230					

FORM 540A (04-03)

FORM 540A

Envirocare of Utah, Inc.

8. MANIFEST NUMBER
(Use this number on all continuation pages)
0840-01-979

Page 3 of 3

UNIFORM LOW-LEVEL RADIOACTIVE WASTE MANIFEST

SHIPPING PAPER (CONTINUATION)

11. U.S. DEPARTMENT OF TRANSPORTATION DESCRIPTION (Including proper shipping name, hazard class, UN ID number, and any additional information)	12. DOT LABEL "RADIOACTIVE"	13. TRANSPORT INDEX	14. PHYSICAL AND CHEMICAL FORM	15. INDIVIDUAL RADIONUCLIDES				16. TOTAL PACKAGE ACTIVITY MBq	mCi	17. LSA/SCO CLASS	18. TOTAL WEIGHT OR VOLUME (Use appropriate units)	19. IDENTIFICATION NUMBER OF PACKAGE
Soil,DOT Non-Regulated, containing Radionuclides	NA	NA	Solid / OXIDES	Th-232	U-234	U-Nat		2.9619E+00	8.0052E-02	NA	20060 LBS; 158.57 FT3	9181
Soil,DOT Non-Regulated, containing Radionuclides	NA	NA	Solid / OXIDES	Ac-227 Ra-228	Pa-231 Th-227	Ra-223 Th-228	Ra-226 Th-230	9.5658E+00	2.5854E-01	NA	18670 LBS; 147.54 FT3	9201
				Th-232	U-234	U-Nat						

FORM 540A (04-03)

BagNum	MANIFEST GROSS WEIGHT
9181	20060

Shipment Survey

Survey Number: GTEOSI-05-00306 Date: 1-20-05 Time: 15:05

Waste Container Type: Super Sack Intermodal Other: Soil

Waste Container ID #: 9181 Storage Bin: 39C Gross Weight: 20060 lbs

	Ludlum 3030		Ludlum 3030		Ludlum 3030		Ludlum 19
Serial #	190646		191265				180299
Probe #	N/A		N/A		N/A		N/A
Calibration Due Date:	12-13-05		4-20-05				22 APR 05
	α	β	α	β	α	β	
Background	0 cpm	25 cpm	0 cpm	25 cpm	cpm	cpm	5 μR/hr
Efficiency	29 %	25 %	29 %	25 %	%	N/A %	
MDA	25 dpm	130 dpm	25 dpm	130 dpm	dpm	dpm	

Maximum Contact Dose Rate: 0.007 mrem/hr Transport Index: 0 mrem/hr

	α cpm	α dpm/100 cm2	β cpm	β dpm/100 cm2
ALARA Limit	N/A	60	N/A	500
Smear #				
1	0	<MDA	24	<MDA
2	0		32	
3	0		22	
4	2		26	
5	0		25	
6	0	<MDA	28	<MDA

Smear Locations: 1 - Bottom 2 - Front 3 - Right Side 4 - Back 5 - Left Side 6 - Top

George Economos — Surveyor Name

George Economos — Surveyor Signature

Supervisor Approval

23832-S-XXD189181-99.9
Date: 01/10/05 Time:1339

1-20-05 15:59 Bag# 9181
20060 lb GR
012005 1559 9181 0020060

BagNum	MANIFEST GROSS WEIGHT
9201	18670

Shipment Survey

Survey Number: GTEOSI-04-10517 Date: 12.14.04 Time: 0918

Waste Container Type: Super Sack Intermodal Other: Soil

Waste Container ID #: 9201 Storage Bin: 40L Gross Weight: 18670 lbs

	Ludlum 3030		Ludlum 3030		Ludlum 3030		Ludlum 19
Serial #	190641		191265		N		193615
Probe #	N/A		N/A				N/A
Calibration Due Date:	3-4-05		4-20-05			A	5-19-05
	α	β	α	β	α	β	
Background	0 cpm	25 cpm	0 cpm	25 cpm	N cpm	cpm	6 μR/hr
Efficiency	29 %	25 %	29 %	25 %	%	%	
MDA	25 dpm	130 dpm	25 dpm	130 dpm	dpm	A dpm	

Maximum Contact Dose Rate: .007 mrem/hr Transport Index: 0 mrem/hr

	α cpm	α dpm/100 cm2	β cpm	β dpm/100 cm2
ALARA Limit	N/A	60	N/A	500
Smear #				
1	0	<MDA	35	<MDA
2	0		22	
3	0		46	
4	1		33	
5	0		27	
6	0		31	

Smear Locations: 1 - Bottom 2 - Front 3 - Right Side 4 - Back 5 - Left Side 6 - Top

DEBRA LePage — Debra LePage
Surveyor Name — Surveyor Signature

George Economos
Supervisor Approval

23128-S-DRQ129201-05.0
Date: 12/14/04 Time:1758

1-06-05 15:51 Bag# 9201
18670 lb GR
010605 1551 9201 0018670

Shipment Survey

Survey Number: GTE031-04 7557 Date: 10-1-04 Time: 1241

Waste Container Type: Super Sack Intermodal Other: N/A

Waste Container ID #: 9122 Storage Bin: 34 Gross Weight: 12560 lbs

	Ludlum 3030		Ludlum 3030		Ludlum 3030		LMI 12S
Serial #	190641		191265				176124
Probe #	N/A		N/A		N/A		N/A
Calibration Due Date:	3-4-05		4-20-05				3-8-05
	α	β	α	β	α	β	
Background	0 cpm	25 cpm	0 cpm	25 cpm	cpm	cpm	6 μR/hr
Efficiency	29 %	25 %	29 %	25 %	N/A %	N/A %	
MDA	25 dpm	130 dpm	25 dpm	130 dpm	dpm	dpm	

Maximum Contact Dose Rate: 0.010 mrem/hr Transport Index: 0 mrem/hr

	α cpm	α dpm/100 cm2	β cpm	β dpm/100 cm2
ALARA Limit	N/A	60	N/A	500
Smear #				
1	0	<MDA	23	<MDA
2	0		25	
3	1		25	
4	0		25	
5	0		30	
6	0		34	

Smear Locations: 1 - Bottom 2 - Front 3 - Right Side 4 - Back 5 - Left Side 6 - Top

SCOTT ECKERT
Surveyor Name

Surveyor Signature

Supervisor Approval

17773-S-SHEET9122-99.9
Date: 09/23/04 Time:1154

10-01-04 12:41 Bag# 9122
12560 lb GR
100104 1241 9122 0012560

NYSDEC:V00089-1; URS27010-039

Shipment Survey

Survey Number: GTEDSI-04-7562 Date: 10-5-04 Time: 1328

Waste Container Type: (Super Sack) Intermodal Other: N/A

Waste Container ID #: 9125 Storage Bin: 35 Gross Weight: 17760 lbs

	Ludlum 3030		Ludlum 3030		Ludlum 3030		Ludlum 19
Serial #	190641		191265				193615
Probe #	N/A		N/A		N/A		N/A
Calibration Due Date:	3-4-05		4-20-05				5-19-05
	α	β	α	β	α	β	
Background	0 cpm	25 cpm	0 cpm	25 cpm	cpm	cpm	6 μR/hr
Efficiency	29 %	25 %	29 %	25 %	N/A %	N/A %	
MDA	25 dpm	130 dpm	25 dpm	130 dpm	dpm	dpm	

Maximum Contact Dose Rate: 0.010 mrem/hr Transport Index: 0 mrem/hr

	α cpm	α dpm/100 cm2	β cpm	β dpm/100 cm2
ALARA Limit	N/A	60	N/A	500
Smear #				
1	1	<MDA	25	<MDA
2	0		23	
3	0		31	
4	1		16	
5	0		25	
6	0		28	

Smear Locations: 1 - Bottom 2 - Front 3 - Right Side 4 - Back 5 - Left Side 6 - Top

S. Eckert
Surveyor Name

Surveyor Signature

George Economos
Supervisor Approval

17904-S-09G209125-99.9
Date: 09/29/04 Time:1550

10-05-04 13:28 Bag# 9125
17760 lb GR
100504 1328 9125 0017760

NYSDEC:V00089-1; URS27010-039

Shipment Survey

Survey Number: GTEGL-04-7556 Date: 9-23-04 Time: 1547

Waste Container Type: Super Sack Intermodal Other: N/A

Waste Container ID #: 9127 Storage Bin: 53 Gross Weight: 18490 lbs

	Ludlum 3030		Ludlum 3030		Ludlum 3030		LM1125
Serial #	190641						176124
Probe #	N/A		N/A		N/A		N/A
Calibration Due Date:	3-4-05						3-8-05
	α	β	α	β	α	β	
Background	0 cpm	25 cpm	cpm	cpm	cpm	cpm	6 μR/hr
Efficiency	29 %	25 %	N/A %	N/A %	N/A %	N/A %	
MDA	25 dpm	130 dpm	dpm	dpm	dpm	dpm	

Maximum Contact Dose Rate: 0.010 mrem/hr Transport Index: 0 mrem/hr

	α cpm	α dpm/100 cm2	β cpm	β dpm/100 cm2
ALARA Limit	N/A	60	N/A	500
Smear #				
1	0	<MDA	32	<MDA
2	3		29	
3	0		18	
4	0		32	
5	0		25	
6	0		29	

Smear Locations: 1 - Bottom 2 - Front 3 - Right Side 4 - Back 5 - Left Side 6 - Top

S. Eckert
Surveyor Name

Surveyor Signature

George Economy
Supervisor Approval

17774-S-SHEET9127-99.9
Date: 09/23/04 Time:1201

9-23-04 15:47 Bag# 9127
18490 lb GR
092304 1547 9127 0018490

Shipment Survey

Survey Number: GTEDSI-04 7563 Date: 10-5-04 Time: 1338

Waste Container Type: Super Sack Intermodal Other: N/A

Waste Container ID #: 9135 Storage Bin: 36 Gross Weight: 22170 lbs

	Ludlum 3030		Ludlum 3030		Ludlum 3030		Ludlum 19
Serial #	190641		191265				193615
Probe #	N/A		N/A		N/A		N/A
Calibration Due Date:	3-4-05		4-20-05				5-19-05
	α	β	α	β	α	β	
Background	0 cpm	25 cpm	0 cpm	25 cpm	cpm	cpm	6 μR/hr
Efficiency	29 %	25 %	29 %	25 %	N/A %	N/A %	
MDA	25 dpm	130 dpm	25 dpm	130 dpm	dpm	dpm	

Maximum Contact Dose Rate: 0.010 mrem/hr Transport Index: 0 mrem/hr

	α cpm	α dpm/100 cm2	β cpm	β dpm/100 cm2
ALARA Limit	N/A	60	N/A	500
Smear #				
1	0	<MDA	29	<MDA
2	0		26	
3	0		32	
4	0		37	
5	0		34	
6	0		31	

Smear Locations: 1 - Bottom 2 - Front 3 - Right Side 4 - Back 5 - Left Side 6 - Top

S. ECKERT
Surveyor Name

Surveyor Signature

George Eunomos
Supervisor Approval

18122-S-LPH159135-04.0
Date: 10/04/04 Time:1408

10-05-04 13:38 Bag# 9135
22170 lb GR
100504 1338 9135 0022170

NYSDEC:V00089-1; URS27010-039

Shipment Survey

Survey Number: GTZDSI-04-7564 Date: 10-5-04 Time: 1347

Waste Container Type: Super Sack Intermodal Other: N/A

Waste Container ID #: 9136 Storage Bin: 36 Gross Weight: 23770 lbs

	Ludlum 3030		Ludlum 3030		Ludlum 3030		Ludlum 19
Serial #	190641		191265				193615
Probe #	N/A		N/A		N/A		N/A
Calibration Due Date:	3-4-05		4-20-05				5-19-05
	α	β	α	β	α	β	
Background	0 cpm	25 cpm	0 cpm	25 cpm	cpm	cpm	6 μR/hr
Efficiency	29 %	25 %	29 %	25 %	N/A %	N/A %	
MDA	25 dpm	130 dpm	25 dpm	130 dpm	dpm	dpm	

Maximum Contact Dose Rate: 0.010 mrem/hr Transport Index: 0 mrem/hr

	α cpm	α dpm/100 cm2	β cpm	β dpm/100 cm2
ALARA Limit	N/A	60	N/A	500
Smear #				
1	0	<MDA	36	<MDA
2	0		32	
3	1		38	
4	0		27	
5	0		32	
6	1		24	

Smear Locations: 1 - Bottom 2 - Front 3 - Right Side 4 - Back 5 - Left Side 6 - Top

S. ECKERT
Surveyor Name

Surveyor Signature

George Economos
Supervisor Approval

18123-S-LPH159136-04.0
Date: 10/04/04 Time:1412

10-05-04 13:47 Bag# 9136
23770 lb GR
100504 1347 9136 0023770

Shipment Survey

Survey Number: GTEDSI-04 7570 Date: 10-5-04 Time: 1551

Waste Container Type: Super Sack Intermodal Other: N/A

Waste Container ID #: 9139 Storage Bin: 37 Gross Weight: 17280 lbs

	Ludlum 3030		Ludlum 3030		Ludlum 3030		Ludlum 19
Serial #	190641		191205				193615
Probe #	N/A		N/A		N/A		N/A
Calibration Due Date:	3-4-05		4-20-05				5-19-05
	α	β	α	β	α	β	
Background	0 cpm	25 cpm	0 cpm	25 cpm	cpm	cpm	6 μR/hr
Efficiency	29 %	25 %	29 %	25 %	N/A %	N/A %	
MDA	25 dpm	130 dpm	25 dpm	130 dpm	dpm	dpm	

Maximum Contact Dose Rate: 0.010 mrem/hr Transport Index: 0 mrem/hr

	α cpm	α dpm/100 cm2	β cpm	β dpm/100 cm2
ALARA Limit	N/A	60	N/A	500
Smear #				
1	0	<MDA	18	<MDA
2	0		24	
3	0		31	
4	0		23	
5	0		37	
6	0		24	

Smear Locations: 1 - Bottom 2 - Front 3 - Right Side 4 - Back 5 - Left Side 6 - Top

S. Eckert
Surveyor Name

Surveyor Signature

George Economos
Supervisor Approval

18169-S-LPH139139-00.5
Date: 10/05/04 Time:1053

10-05-04 15:51 Bag# 9139
17280 lb GR
100504 1551 9139 0017280

Shipment Survey

y Number: GTEOSI-04-7578 Date: 10-20-04 Time: 1302

Waste Container Type: Super Sack Intermodal Other: DEBRIS

Waste Container ID #: ~~9135~~ 9140 Storage Bin: 38 Gross Weight: 8880 lbs

SGE 10-20-04

	Ludlum 3030		Ludlum 3030		Ludlum 3030		LMI 125
Serial #	190641		191265				176124
Probe #	N/A		N/A		N/A		N/A
Calibration Due Date:	3-4-05		4-20-05				3-8-05
	α	β	α	β	α	β	
Background	0 cpm	25 cpm	0 cpm	25 cpm	cpm	cpm	5 μR/hr
Efficiency	29 %	25 %	29 %	25 %	N/A %	N/A %	
MDA	25 dpm	130 dpm	25 dpm	130 dpm	dpm	dpm	

Maximum Contact Dose Rate: 0.010 mrem/hr Transport Index: 0 mrem/hr

	α cpm	α dpm/100 cm2	β cpm	β dpm/100 cm2
ALARA Limit	N/A	60	N/A	500
Smear #				
1	0	<MDA	36	<MDA
2	0		21	
3	0		29	
4	1		30	
5	0		32	
6	0		27	

Smear Locations: 1 - Bottom 2 - Front 3 - Right Side 4 - Back 5 - Left Side 6 - Top

S. Eckert
Surveyor Name

Surveyor Signature

George Economos
Supervisor Approval

20081-D-DEBRI9140-99.9
Date: 11/01/04 Time:0823

9'1/4"
6'3/4"

CONTACT 0.010 MREM/HR
1 METER 0.000 MREM/HR

10-20-04 13:02 Bag# 9140
8880 lb GR
102004 1302 9140 0008880

Shipment Survey

Survey Number: GTEDSI-04-7565 Date: 10-5-04 Time: 1428

Waste Container Type: (Super Sack) Intermodal Other: N/A

Waste Container ID #: 9143 Storage Bin: 36 Gross Weight: 17750 lbs

	Ludlum 3030		Ludlum 3030		Ludlum 3030		Ludlum 19
Serial #	190641		191265				193615
Probe #	N/A		N/A		N/A		N/A
Calibration Due Date:	3-4-05		4-20-05				5-19-05
	α	β	α	β	α	β	
Background	0 cpm	25 cpm	0 cpm	25 cpm	cpm	cpm	6 μR/hr
Efficiency	29 %	25 %	29 %	25 %	N/A %	N/A %	
MDA	25 dpm	130 dpm	25 dpm	130 dpm	dpm	dpm	

Maximum Contact Dose Rate: 0.010 mrem/hr Transport Index: 0 mrem/hr

	α cpm	α dpm/100 cm2	β cpm	β dpm/100 cm2
ALARA Limit	N/A	60	N/A	500
Smear #				
1	0	<MDA	33	<MDA
2	0		25	
3	0		29	
4	1		22	
5	1		40	
6	0		30	

Smear Locations: 1 - Bottom 2 - Front 3 - Right Side 4 - Back 5 - Left Side 6 - Top

S. ECKERT
Surveyor Name

Surveyor Signature

George Lunoma
Supervisor Approval

18194-S-LPH139143-02.0
Date: 10/05/04 Time:1259

10-05-04 14:28 Bag# 9143
17750 lb GR
100504 1428 9143 0017750

BagNum	MANIFEST GROSS WEIGHT
9154	13540

Shipment Survey

Survey Number: GTEOSI-04-7582 Date: 10-26-04 Time: 1319

Waste Container Type: Super Sack Intermodal Other: Concrete DEBRIS

Waste Container ID #: 9154 Storage Bin: 39 Gross Weight: 13540 lbs

	Ludlum 3030		Ludlum 3030		Ludlum 3030		LMI 19
Serial #	190641		191265				196117
Probe #	N/A		N/A		N/A		N/A
Calibration Due Date:	3-4-05		4-20-05				8-10-05
	α	β	α	β	α	β	
Background	0 cpm	25 cpm	0 cpm	25 cpm	cpm	cpm	6 μR/hr
Efficiency	29 %	25 %	29 %	25 %	N/A %	N/A %	
MDA	25 dpm	130 dpm	25 dpm	130 dpm	dpm	dpm	

Maximum Contact Dose Rate: 0.010 mrem/hr Transport Index: 0 mrem/hr

	α cpm	α dpm/100 cm2	β cpm	β dpm/100 cm2
ALARA Limit	N/A	60	N/A	500
Smear #				
1	0	<MDA	23	<MDA
2	1		25	
3	0		28	
4	0		21	
5	0		23	
6	0		24	

Smear Locations: 1 - Bottom 2 - Front 3 - Right Side 4 - Back 5 - Left Side 6 - Top

S. Eckert
Surveyor Name

Surveyor Signature

George Economos
Supervisor Approval

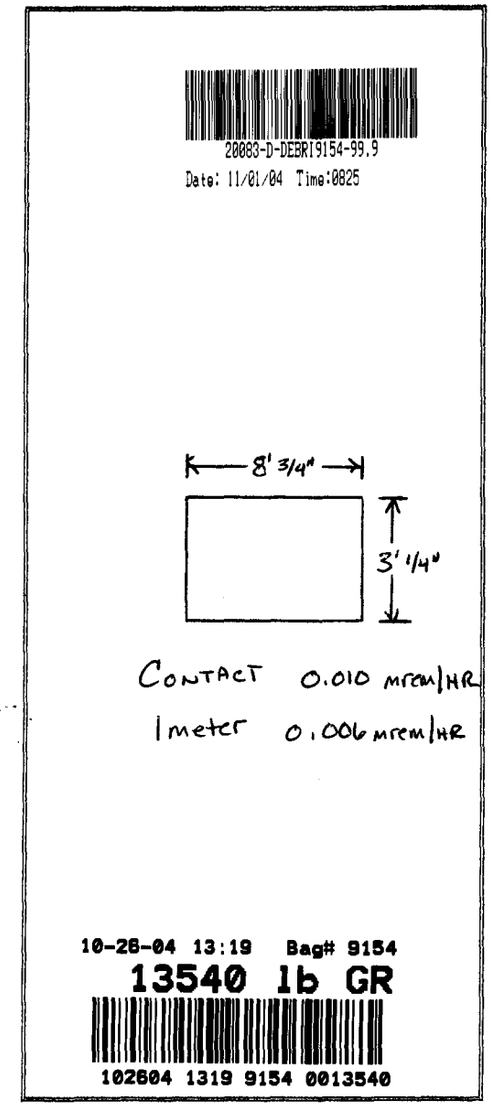

ENVIROCARE *OF UTAH, LLC.*

THE SAFE ALTERNATIVE

CERTIFICATE OF DISPOSAL

GTE Operations Support Inc., Irving

This Certificate acknowledges that the following manifested shipments:

Shipment	Disposal Location	Date	Shipment	Disposal Location	Date
0840-01-0978	Class A	06/08/05 10:48:04	0840-01-0979	Class A	06/08/05 10:48:04
0840-01-0980	Class A	06/08/05 10:48:04			

Representing 4,589.40 cubic feet of waste has been disposed of at the above listed Disposal Facility. Disposal is subject to Envirocare's Radioactive Material License, all other applicable licenses, permits and regulations, and the Disposal Agreement.

Brent Anderson
Director of LLRW Operations

6/9/05
Date

605 N. 5600 W, Salt Lake City, Utah 84116 Telephone (801) 532-1330

Attachment 5.15
RAILCAR INSPECTION FORM

Shipment Number	Carrier	Railcar Number
0840-01-979	New York + Atlantic / LIRR	MRMX - 2070

Item	SAT	UNSAT	Criteria	Comments
Coupler	☑	☐	Hardware intact, no cracks or broken welds, latching mechanism works properly, no loose or damaged parts	
Suspension	☑	☐	Hardware intact, no visible cracks or broken welds, coil springs seated and intact, inner and outer bearings intact and seated properly	
Wheel & Axle Assembly	☑	☐	Overall condition, no cracks or damaged areas on wheel surfaces, hubs centered, bolting intact, rims not bent or cracked	
Frame & Undercarriage	☑	☐	Main beams straight and centered, no major bends or damage, welds intact, no cracks	
Floors & Walls (Gondola, Boxcar)	☑	☐	No damage with open holes, punch throughs, ect. No rust damage, seams and welds intact, no rotting or other material problems, structurally sound	
Attachment Points or Tie Downs	☑	☐	Tie down hardware straight and intact, no cracks on or around attachment hardware, mechanical clips or latches operable and complete	
Doors (Boxcar Only)	☑	☐	Can be closed and secured properly, lubricated properly, rollers and tracks in operable condition, no loose or missing hardware, sealing surfaces intact and seals in serviceable condition	
Seals and Gasket	☑	☐	Seal Flanges intact with no dents or bends that affect sealing capability, gaskets pliable and in serviceable condition, no torn or missing areas, gasket appropriate to meet sealing requirements	
Seams (Gondola, Boxcar)	☑	☐	Seams intact, welds visibly sufficient, all corners and mating interfaces caulked and sealed properly	
Drains	☑	☐	Drains plugged or sealed properly, verify threaded plugs are tack welded or otherwise disabled, all other holes closed and sealed	
Brakes	☑	☐	Visibly inspect brake shoes, minimum 1" contact surface on all shoes, hoses and piping (tubing) mechanically sound, no missing or loose hardware, valves operate freely, no kinks or obstructions in piping or hoses	
Paint and Lettering	☑	☐	Overall good condition of exterior surfaces, identification numbering legible and intact, areas for placards or labels intact and structurally sound (Wood or metal panels)	
Bracing	☑	☐	Bracing and shoring must be sufficient to prevent shifting of lading during conditions normally incident to transportation	

MHF-LS Qualified Technician Signature _____

Shipment Date 5-11-05

Attachment 5.10
TRANSPORT VEHICLE RELEASE CHECKLIST

Shipment Number- 0840-01-979

Truck Number- 38 - R40C

Trailer Number- 225 - 226

A qualified MHF-LS shipping technician shall verify that each item listed is satisfactory and then place a Check Mark in the corresponding box.

1. Driver possesses a valid driver's license with a HAZMAT endorsement ☐
2. Driver possesses a valid copy of a "Research and Special Programs Administration" U.S. DOT Hazmat Registration Certificate ☐
3. If manifested on a Hazardous Waste Manifest, ensure the carrier possesses a current EPA ID # ☐
4. Lamps are operable ☐
   - Headlights and Brights
   - Warning Lights and Flashers
   - Brake Lights
5. Coupling devices are intact ☐
6. Tires are sufficient ☐
   - No fabric is exposed through tread or sidewall
   - Front wheel tires must have tread pattern to a depth of ≥1/8 inch
   - Other tires must have tread pattern to a depth of ≥1/16 inch
   - Re-treaded tires are not authorized
7. Horn is operable ☐
8. Windshield wipers are operable ☐
9. Rear-vision mirrors are adequate (1 on each side) ☐
10. Emergency equipment is on-hand and accessible ☐
    - Fire extinguisher
    - Warning devices- bi-directional emergency reflectors, triangles (3), or liquid burning flares
11. General vehicle integrity is satisfactory ☐
    - Frame appears undamaged
    - Flooring is sufficient to support load
    - If a closed transport vehicle, vehicle is closed
    - Vehicle is otherwise in unimpaired physical condition
12. Vehicle truck and trailer have current DOT inspection stickers on both components (Good for 1 year from date performed) ☐
13. Vehicle is properly placarded (Exclusive Use LSA, Yellow III and HRCQ only) ☐
14. Shoring, strapping, blocking and bracing is adequate to prevent shifting of lading ☐

MHF-LS Qualified Technician Signature [signature]
Shipment Date 5-11-05

Attachment 5.9
LOADING DIAGRAM

A qualified MHF-LS shipper shall complete the following diagram by writing the package number and corresponding weight at the approximate position in which it is placed. The space to the left of the diagram may be used for additional or explanatory information as necessary.

Shipment Number- 0840-01-979

Front

9201
18670-lbs

9140
8880-lbs

Rear

MHF-LS Qualified Technician
Signature
Shipment Date 5-11-05

Attachment 5.9
LOADING DIAGRAM

A qualified MHF-LS shipper shall complete the following diagram by writing the package number and corresponding weight at the approximate position in which it is placed. The space to the left of the diagram may be used for additional or explanatory information as necessary.

Shipment Number- 0840.01-979

Front

9154
13,540-lbs

9181
20060-lbs

Rear

MHF-LS Qualified Technician
Signature _____
Shipment Date 5-11-03

Attachment 5.9
LOADING DIAGRAM

A qualified MHF-LS shipper shall complete the following diagram by writing the package number and corresponding weight at the approximate position in which it is placed. The space to the left of the diagram may be used for additional or explanatory information as necessary.

Shipment Number- 0840-01-979

Front

9122
12560-lbs

9135
22170-lbs

Rear

MHF-LS Qualified Technician
Signature _____
Shipment Date 5-11-05

Attachment 5.9
LOADING DIAGRAM

A qualified MHF-LS shipper shall complete the following diagram by writing the package number and corresponding weight at the approximate position in which it is placed. The space to the left of the diagram may be used for additional or explanatory information as necessary.

Shipment Number- QB40-01-979

Front

9127
18,490-lbs

9125
17760-lbs

Rear

MHF-LS Qualified Technician
Signature _____
Shipment Date 5-11-05

Attachment 5.9
LOADING DIAGRAM

A qualified MHF-LS shipper shall complete the following diagram by writing the package number and corresponding weight at the approximate position in which it is placed. The space to the left of the diagram may be used for additional or explanatory information as necessary.

Shipment Number- 0840-01-979

Front

9136
23,770-lbs

9139
17,280-lbs

Rear

MHF-LS Qualified Technician
Signature [signature]
Shipment Date 5.11.05

Attachment 5.9
LOADING DIAGRAM

A qualified MHF-LS shipper shall complete the following diagram by writing the package number and corresponding weight at the approximate position in which it is placed. The space to the left of the diagram may be used for additional or explanatory information as necessary.

Shipment Number- 0840-01-979

Front

9143
17750-lbs

Rear

MHF-LS Qualified Technician
Signature _____
Shipment Date 5-11-05

Straight Bill of Lading

Shipper MHF-LS For GTE Operations Support Incorporated
140 Contiague Rock Road
Hicksville, NY 11369

Date: 5/11/2005

Consigned to MHF-LS @ New York-Atlantic Rail Spur
Hicksville, NY 11369

Load in Gondola # MRMX 2070

Emergency Contact: CHEMTREC 800-424-9300

TR: TL:

Quantity	Description		Net Waste Weight
1	Soil, DOT Non-Regulated Waste, Containing		
	Radioactive Materials.		
	Package ID Number		**Pounds:**
	Liner	9143	17750
	Liner		
			Total:
			17750
	Packages do not meet the DOT "radioactive material"		
	definition in 49 CFR 173.403.		
	JB 5/12/05		
	Radionuclide: Ac-227,Th-227,~~U238,~~Th232, Th230,Pa-231,Ra-223		
	Ra-226,Ra-228,Th-228,U-234,U-nat,		
	Total Activity: 2.5005 MBq		
	Physical Form: Solid		
	Chemical Form: Metal Oxide		

GENERATOR CERTIFICATION: I hereby certify and declare that the contents of this consignment are fully and accurately described above by proper shipping name and are classified, packed, marked, and labeled, and are in all respects in proper condition for transport by highway according to applicable international and national government regulations.

Printed/Typed Name	Signature		Date
Rob Miller for MHFLS at GTEOSI			5/11/2005
Transporter	Signature		Date
Priority Transport	Columbus Shand		5/11/2005

Straight Bill of Lading

Shipper MHF-LS For GTE Operations Support Incorporated
140 Contiague Rock Road
Hicksville, NY 11369

Date: 5/11/2005

Consigned to MHF-LS @ New York-Atlantic Rail Spur
Hicksville, NY 11369

Load in Gondola # MRMX 2070

Emergency Contact: CHEMTREC 800-424-9300

TR: TL:

Quantity	Description		Net Waste Weight
2	Soil, DOT Non-Regulated Waste, Containing		
	Radioactive Materials.		
	Package ID Number		**Pounds:**
	Liner	9127	18490
	Liner	9125	17760
			Total:
			36250
	Packages do not meet the DOT "radioactive material"		
	definition in 49 CFR 173.403.		
	JB 5/12/05		
	Radionuclide: Ac-227,Th-227,~~U238,~~ Th232, Th230,Pa-231,Ra-223		
	Ra-226,Ra-228,Th-228,U-234,U-nat,		
	Total Activity: 10.4629 MBq		
	Physical Form: Solid		
	Chemical Form: Metal Oxide		

GENERATOR CERTIFICATION: I hereby certify and declare that the contents of this consignment are fully and accurately described above by proper shipping name and are classified, packed, marked, and labeled, and are in all respects in proper condition for transport by highway according to applicable international and national government regulations.

Printed/Typed Name	Signature		Date
Rob Miller for MHFLS at GTEOSI			5/11/2005
Transporter	Signature		Date
Priority Transport			5/11/2005

Straight Bill of Lading

Shipper MHF-LS For GTE Operations Support Incorporated
140 Contiague Rock Road
Hicksville, NY 11369

Date: 5/11/2005

Consigned to MHF-LS @ New York-Atlantic Rail Spur
Hicksville, NY 11369

Load in Gondola # MRMX 2070

Emergency Contact: CHEMTREC 800-424-9300

TR:

Quantity	Description		Net Waste Weight
2	Soil, DOT Non-Regulated Waste, Containing		
	Radioactive Materials.		
	Package ID Number		**Pounds:**
	Liner	9122	12560
	Liner	9135	22170
			Total:
			34730
	Packages do not meet the DOT "radioactive material"		
	definition in 49 CFR 173.403.		
	JB 5/12/05		
	Radionuclide: Ac-227,Th-227,~~U238~~, Th232, Th230,Pa-231,Ra-223		
	Ra-226,Ra-228,Th-228,U-234,U-nat,		
	Total Activity: 4.7934 MBq		
	Physical Form: Solid		
	Chemical Form: Metal Oxide		

GENERATOR CERTIFICATION: I hereby certify and declare that the contents of this consignment are fully and accurately described above by proper shipping name and are classified, packed, marked, and labeled, and are in all respects in proper condition for transport by highway according to applicable international and national government regulations.

Printed/Typed Name	Signature		Date
Rob Miller for MHFLS at GTEOSI			5/11/2005
Transporter	Signature		Date
Priority Transport	Calvin Sheridan		5/11/2005

Straight Bill of Lading

Shipper MHF-LS For GTE Operations Support Incorporated
140 Contiague Rock Road
Hicksville, NY 11369

Date: 5/11/2005

Consigned to MHF-LS @ New York-Atlantic Rail Spur
Hicksville, NY 11369

Load in Gondola # MRMX 2070

Emergency Contact: CHEMTREC 800-424-9300

TR: TL:

Quantity	Description		Net Waste Weight
2	Soil, DOT Non-Regulated Waste, Containing		
	Radioactive Materials.		
	Package ID Number		**Pounds:**
	Liner	9136	23770
	Liner	9139	17280
			Total:
			41050
	Packages do not meet the DOT "radioactive material"		
	definition in 49 CFR 173.403.		
	Radionuclide: Ac-227,Th-227,~~U238~~, Th232, Th230,Pa-231,Ra-223		
	Ra-226,Ra-228,Th-228,U-234,U-nat,		
	Total Activity: 9.8244 MBq		
	Physical Form: Solid		
	Chemical Form: Metal Oxide		

GENERATOR CERTIFICATION: I hereby certify and declare that the contents of this consignment are fully and accurately described above by proper shipping name and are classified, packed, marked, and labeled, and are in all respects in proper condition for transport by highway according to applicable international and national government regulations.

Printed/Typed Name	Signature		Date
Rob Miller for MHFLS at GTEOSI			5/11/2005
Transporter	Signature		Date
Priority Transport			5/11/2005

Straight Bill of Lading

Shipper MHF-LS For GTE Operations Support Incorporated
140 Contiague Rock Road
Hicksville, NY 11369

Date: 5/11/2005

Consigned to MHF-LS @ New York-Atlantic Rail Spur
Hicksville, NY 11369

Load in Gondola # MRMX 2070

Emergency Contact: CHEMTREC 800-424-9300

TR: TL:

Total All Trucks
190930

Quantity	Description		Net Waste Weight
2	Soil, DOT Non-Regulated Waste, Containing		
	Radioactive Materials.		
	Package ID Number		**Pounds:**
	Liner	9201	18670
	Liner	9140	8880
			Total:
			27550
	Packages do not meet the DOT "radioactive material"		
	definition in 49 CFR 173.403.		
	JPB 5/12/05		
	Radionuclide: Ac-227,Th-227,~~U238, Th~~232, Th230,Pa-231,Ra-223		
	Ra-226,Ra-228,Th-228,U-234,U-nat,		
	Total Activity: 40.2858 MBq		
	Physical Form: Solid		
	Chemical Form: Metal Oxide		

GENERATOR CERTIFICATION: I hereby certify and declare that the contents of this consignment are fully and accurately described above by proper shipping name and are classified, packed, marked, and labeled, and are in all respects in proper condition for transport by highway according to applicable international and national government regulations

Printed/Typed Name	Signature		Date
Rob Miller for MHFLS at GTEOSI			5/11/2005
Transporter	Signature		Date
Priority Transport	Sherrod Jr. Columbus		5/11/2005

Straight Bill of Lading

Shipper	MHF-LS For GTE Operations Support Incorporated 140 Contiague Rock Road Hicksville, NY 11369	Date: 5/11/2005
Consigned to	MHF-LS @ New York-Atlantic Rail Spur Hicksville, NY 11369	Load in Gondola # mrmx
Emergency Contact:	CHEMTREC 800-424-9300	2070

TR: TL:

Quantity	Description		Net Waste Weight
2	Soil, DOT Non-Regulated Waste, Containing		
	Radioactive Materials.		
	Package ID Number		**Pounds:**
	Liner	9154	13540
	Liner	9181	20060
			Total:
			33600
	Packages do not meet the DOT "radioactive material"		
	definition in 49 CFR 173.403.		
	Radionuclide: Ac-227,Th-227,~~U238,~~ Th232, Th230,Pa-231,Ra-223		
	Ra-226,Ra-228,Th-228,U-234,U-nat,		
	Total Activity: 49.9 MBq		
	Physical Form: Solid		
	Chemical Form: Metal Oxide		

GENERATOR CERTIFICATION: I hereby certify and declare that the contents of this consignment are fully and accurately described above by proper shipping name and are classified, packed, marked, and labeled, and are in all respects in proper condition for transport by highway according to applicable international and national government regulations.

Printed/Typed Name	Signature		Date
Rob Miller for MHFLS at GTEOSI			5/11/2005
Transporter	Signature		Date
Priority Transport			5/11/2005

MRMX	Shipment #		0													
on-site	new	Bag #		9201	9140	9154	9181	9122	9135	9136	9139	9127	9125	9143		
	Storage Loc.			18670	8880	13540	20060	12560	22170	23770	17280	18490	17760	17750		
2070	0840-01-979		203200													

container #
9201

shipping check sheet (For Form 540)

	Ac-227		corrected	activity mBq	activity mCi	activity Ci	SNM	source	
		1.020E-001	1.020E-001	3.1852E-02	8.6087E-04	8.6087E-07	grams	kg	
grams			pCi/g				1.1956E-08	1.1956E-11	
8439860		7.2000E+01							
	Pa-231			activity mBq	activity mCi	activity Ci	SNM	source	
18590		2.743E-001	2.743E-001	8.5857E-02	2.3151E-03	2.3151E-06	grams	kg	
grams							4.9256E-05	4.9256E-08	
8439860		4.7000E-02							
	Ra-223			activity mBq	activity mCi	activity Ci	SNM	source	
18590		5.282E-002	5.282E-002	1.6494E-02	4.4579E-04	4.4579E-07	grams	kg	
grams							8.7410E-12	8.7410E-15	
8439860		5.1000E+04							
	Ra-226			activity mBq	activity mCi	activity Ci	SNM	source	
18590		4.191E-001	3.0427E-01	9.5015E-02	2.5680E-03	2.5680E-06	grams	kg	1.37741
grams							2.5680E-06	2.5680E-09	
8439860		1.0000E+00							
	Ra228			activity mBq	activity mCi	activity Ci	SNM	source	
18590		7.982E-001	1.1322E+00	3.5356E-01	9.5556E-03	9.5556E-06	grams	kg	0.705
grams							3.5391E-08	3.5391E-11	
8439860		2.7000E+02							
	TH-227			activity mBq	activity mCi	activity Ci	SNM	source	
18590		1.020E-001	1.020E-001	3.1852E-02	8.6087E-04	8.6087E-07	grams	kg	
grams							2.7770E-11	2.7770E-14	
8439860		3.1000E+04							
	Th-228			activity mBq	activity mCi	activity Ci	SNM	source	
18590		7.269E-001	1.3128E+00	4.0995E-01	1.1080E-02	1.1080E-05	grams	kg	
grams							1.3512E-08	1.3512E-11	0.55371
8439860		8.2000E+02							
	Th-230			activity mBq	activity mCi	activity Ci	SNM	source	
18590		7.982E-001	5.9226E-01	1.8495E-01	4.9986E-03	4.9986E-06	grams	kg	
grams							2.3803E-04	2.3803E-07	1.34771
8439860		2.1000E-02							
	TH-232			activity mBq	activity mCi	activity Ci	SNM	source	
18590		7.982E-001	1.1322E+00	3.5356E-01	9.5556E-03	9.5556E-06	grams	kg	0.705
grams							8.6869E+01	8.6869E-02	
8439860		1.1000E-07							
	U-234			activity mBq	activity mCi	activity Ci	SNM	source	
18590		1.105E+001	9.8124E+00	3.0642E+00	8.2815E-02	8.2815E-05	grams	kg	1.12613
grams							1.3357E-02	1.3357E-05	
8439860		6.2000E-03							
	U-235			activity mBq	activity mCi	activity Ci	SNM	source	
18590		7.054E-001	9.0320E-01	2.8205E-01	7.6229E-03	7.6229E-06	grams	kg	0.781
grams							3.4650E+00	3.4650E-03	
8439860		2.2000E-06							
	U-238			activity mBq	activity mCi	activity Ci	SNM	source	
18590		1.105E+001	1.4912E+01	4.6587E+00	1.2586E-01	1.2586E-04	grams	kg	0.741
grams							3.7017E+02	3.7017E-01	
8439860		3.4000E-07							

Totals for all flag 1 data

			corrected	activity mBq	activity mCi	activity Ci	SNM	source	
18590		2.6877E+01	3.0531E+01	9.5658E+00	2.5854E-01	2.5854E-04	grams	kg	flag1 data
			pCi/g	541 will be < than the 540 (MDA not added)			3.4650E+00	4.5705E-01	
147.5396825									

data for NORM

	U-nat		corrected pCi/g	activity mBq	activity mCi	activity Ci		source	
		1.1755E+01	1.5815E+01	4.9388E+00	1.3348E-01	1.3348E-04		kg	
								1.8800E-01	
		7.1000E-07							

	U-nat		corrected pCi/g	activity mBq	activity mCi	activity Ci		source	
		2.6877E+01	3.0531E+01	9.5658E+00	2.5854E-01	2.5854E-04		kg total	norm data
								2.7488E-01	

X

container #
9140

shipping check sheet (For Form 540)

	Ac-227		corrected	activity mBq	activity mCi	activity Ci	SNM	source	
		1.097E-001	1.097E-001	1.6216E-02	4.3827E-04	4.3827E-07	grams	kg	
grams			pCi/g				6.0871E-09	6.0871E-12	
3995200		7.2000E+01							
	Pa-231			activity mBq	activity mCi	activity Ci	SNM	source	
8800		1.159E+000	1.159E+000	1.7133E-01	4.6304E-03	4.6304E-06	grams	kg	
grams							9.8520E-05	9.8520E-08	
3995200		4.7000E-02							
	Ra-223			activity mBq	activity mCi	activity Ci	SNM	source	
8800		9.882E-002	9.882E-002	1.4608E-02	3.9481E-04	3.9481E-07	grams	kg	
grams							7.7413E-12	7.7413E-15	
3995200		5.1000E+04							
	Ra-226			activity mBq	activity mCi	activity Ci	SNM	source	
8800		3.349E-001	2.4314E-01	3.5941E-02	9.7138E-04	9.7138E-07	grams	kg	1.37741
grams							9.7138E-07	9.7138E-10	
3995200		1.0000E+00							
	Ra228			activity mBq	activity mCi	activity Ci	SNM	source	
8800		9.881E-001	1.4016E+00	2.0718E-01	5.5995E-03	5.5995E-06	grams	kg	0.705
grams							2.0739E-08	2.0739E-11	
3995200		2.7000E+02							
	TH-227			activity mBq	activity mCi	activity Ci	SNM	source	
8800		1.097E-001	1.097E-001	1.6216E-02	4.3827E-04	4.3827E-07	grams	kg	
grams							1.4138E-11	1.4138E-14	
3995200		3.1000E+04							
	Th-228			activity mBq	activity mCi	activity Ci	SNM	source	
8800		7.596E-001	1.3718E+00	2.0279E-01	5.4808E-03	5.4808E-06	grams	kg	
grams							6.6839E-09	6.6839E-12	0.55371
3995200		8.2000E+02							
	Th-230			activity mBq	activity mCi	activity Ci	SNM	source	
8800		9.881E-001	7.3317E-01	1.0838E-01	2.9292E-03	2.9292E-06	grams	kg	
grams							1.3948E-04	1.3948E-07	1.34771
3995200		2.1000E-02							
	TH-232			activity mBq	activity mCi	activity Ci	SNM	source	
8800		9.881E-001	1.4016E+00	2.0718E-01	5.5995E-03	5.5995E-06	grams	kg	0.705
grams							5.0905E+01	5.0905E-02	
3995200		1.1000E-07							
	U-234			activity mBq	activity mCi	activity Ci	SNM	source	
8800		8.725E+001	7.7478E+01	1.1453E+01	3.0954E-01	3.0954E-04	grams	kg	1.12613
grams							4.9926E-02	4.9926E-05	
3995200		6.2000E-03							
	U-235			activity mBq	activity mCi	activity Ci	SNM	source	
8800		4.657E+000	5.9629E+00	8.8145E-01	2.3823E-02	2.3823E-05	grams	kg	0.781
grams							1.0829E+01	1.0829E-02	
3995200		2.2000E-06							
	U-238			activity mBq	activity mCi	activity Ci	SNM	source	
8800		8.725E+001	1.1775E+02	1.7406E+01	4.7042E-01	4.7042E-04	grams	kg	0.741
grams							1.3836E+03	1.3836E+00	
3995200		3.4000E-07							

Totals for all flag 1 data

			corrected	activity mBq	activity mCi	activity Ci	SNM	source	
8800		1.8469E+02	2.0771E+02	3.0720E+01	8.3026E-01	8.3026E-04	grams	kg	flag1 data
			pCi/g	541 will be < than the 540 (MDA not added)			1.0829E+01	1.4345E+00	
69.84126984				data for NORM					
	U-nat		corrected pCi/g	activity mBq	activity mCi	activity Ci		source	
		9.1907E+01	1.2371E+02	1.8287E+01	4.9424E-01	4.9424E-04		kg	
								6.9612E-01	
		7.1000E-07							

U-nat		corrected pCi/g	activity mBq	activity mCi	activity Ci		source	
	1.8469E+02	2.0771E+02	3.0720E+01	8.3026E-01	8.3026E-04		kg total	norm data
							7.4707E-01	

X

container #
9154

shipping check sheet (For Form 540)

	Ac-227		corrected	activity mBq	activity mCi	activity Ci	SNM	source	
		1.097E-001	1.097E-001	2.4803E-02	6.7036E-04	6.7036E-07	grams	kg	
grams			pCi/g				9.3105E-09	9.3105E-12	
6110840		7.2000E+01							
	Pa-231			activity mBq	activity mCi	activity Ci	SNM	source	
13460		1.159E+000	1.159E+000	2.6205E-01	7.0825E-03	7.0825E-06	grams	kg	
grams							1.5069E-04	1.5069E-07	
6110840		4.7000E-02							
	Ra-223			activity mBq	activity mCi	activity Ci	SNM	source	
13460		9.882E-002	9.882E-002	2.2343E-02	6.0387E-04	6.0387E-07	grams	kg	
grams							1.1841E-11	1.1841E-14	
6110840		5.1000E+04							
	Ra-226			activity mBq	activity mCi	activity Ci	SNM	source	
13460		3.349E-001	2.4314E-01	5.4974E-02	1.4858E-03	1.4858E-06	grams	kg	1.37741
grams							1.4858E-06	1.4858E-09	
6110840		1.0000E+00							
	Ra228			activity mBq	activity mCi	activity Ci	SNM	source	
13460		9.881E-001	1.4016E+00	3.1689E-01	8.5647E-03	8.5647E-06	grams	kg	0.705
grams							3.1721E-08	3.1721E-11	
6110840		2.7000E+02							
	TH-227			activity mBq	activity mCi	activity Ci	SNM	source	
13460		1.097E-001	1.097E-001	2.4803E-02	6.7036E-04	6.7036E-07	grams	kg	
grams							2.1624E-11	2.1624E-14	
6110840		3.1000E+04							
	Th-228			activity mBq	activity mCi	activity Ci	SNM	source	
13460		7.596E-001	1.3718E+00	3.1017E-01	8.3831E-03	8.3831E-06	grams	kg	
grams							1.0223E-08	1.0223E-11	0.55371
6110840		8.2000E+02							
	Th-230			activity mBq	activity mCi	activity Ci	SNM	source	
13460		9.881E-001	7.3317E-01	1.6577E-01	4.4803E-03	4.4803E-06	grams	kg	
grams							2.1335E-04	2.1335E-07	1.34771
6110840		2.1000E-02							
	TH-232			activity mBq	activity mCi	activity Ci	SNM	source	
13460		9.881E-001	1.4016E+00	3.1689E-01	8.5647E-03	8.5647E-06	grams	kg	0.705
grams							7.7861E+01	7.7861E-02	
6110840		1.1000E-07							
	U-234			activity mBq	activity mCi	activity Ci	SNM	source	
13460		8.725E+001	7.7478E+01	1.7518E+01	4.7345E-01	4.7345E-04	grams	kg	1.12613
grams							7.6364E-02	7.6364E-05	
6110840		6.2000E-03							
	U-235			activity mBq	activity mCi	activity Ci	SNM	source	
13460		4.657E+000	5.9629E+00	1.3482E+00	3.6438E-02	3.6438E-05	grams	kg	0.781
grams							1.6563E+01	1.6563E-02	
6110840		2.2000E-06							
	U-238			activity mBq	activity mCi	activity Ci	SNM	source	
13460		8.725E+001	1.1775E+02	2.6623E+01	7.1953E-01	7.1953E-04	grams	kg	0.741
grams							2.1163E+03	2.1163E+00	
6110840		3.4000E-07							

Totals for all flag 1 data

			corrected	activity mBq	activity mCi	activity Ci	SNM	source	
13460		1.8469E+02	2.0771E+02	4.6987E+01	1.2699E+00	1.2699E-03	grams	kg	flag1 data
			pCi/g	541 will be < than the 540 (MDA not added)			1.6563E+01	2.1942E+00	
106.8253968				data for NORM					
	U-nat		corrected pCi/g	activity mBq	activity mCi	activity Ci		source	
		9.1907E+01	1.2371E+02	2.7971E+01	7.5597E-01	7.5597E-04		kg	
								1.0647E+00	
		7.1000E-07							

U-nat		corrected pCi/g	activity mBq	activity mCi	activity Ci		source	
	1.8469E+02	2.0771E+02	4.6987E+01	1.2699E+00	1.2699E-03		kg total	norm data
							1.1427E+00	

X

container #
9181

shipping check sheet (For Form 540)

	Ac-227		corrected	activity mBq	activity mCi	activity Ci	SNM	source	
		5.521E-002	5.521E-002	1.8530E-02	5.0081E-04	5.0081E-07	grams	kg	
grams			pCi/g				6.9556E-09	6.9556E-12	
9070920		7.2000E+01							
	Pa-231			activity mBq	activity mCi	activity Ci	SNM	source	
19980		2.456E-001	2.456E-001	8.2429E-02	2.2278E-03	2.2278E-06	grams	kg	
grams							4.7400E-05	4.7400E-08	
9070920		4.7000E-02							
	Ra-223			activity mBq	activity mCi	activity Ci	SNM	source	
19980		4.981E-002	4.981E-002	1.6717E-02	4.5182E-04	4.5182E-07	grams	kg	
grams							8.8593E-12	8.8593E-15	
9070920		5.1000E+04							
	Ra-226			activity mBq	activity mCi	activity Ci	SNM	source	
19980		1.607E-001	1.1667E-01	3.9157E-02	1.0583E-03	1.0583E-06	grams	kg	1.37741
grams							1.0583E-06	1.0583E-09	
9070920		1.0000E+00							
	Ra228			activity mBq	activity mCi	activity Ci	SNM	source	
19980		1.822E-001	2.5844E-01	8.6739E-02	2.3443E-03	2.3443E-06	grams	kg	0.705
grams							8.6825E-09	8.6825E-12	
9070920		2.7000E+02							
	TH-227			activity mBq	activity mCi	activity Ci	SNM	source	
19980		5.521E-002	5.521E-002	1.8530E-02	5.0081E-04	5.0081E-07	grams	kg	
grams							1.6155E-11	1.6155E-14	
9070920		3.1000E+04							
	Th-228			activity mBq	activity mCi	activity Ci	SNM	source	
19980		2.175E-001	3.9280E-01	1.3183E-01	3.5631E-03	3.5631E-06	grams	kg	
grams							4.3452E-09	4.3452E-12	0.55371
9070920		8.2000E+02							
	Th-230			activity mBq	activity mCi	activity Ci	SNM	source	
19980		1.822E-001	1.3519E-01	4.5374E-02	1.2263E-03	1.2263E-06	grams	kg	
grams							5.8396E-05	5.8396E-08	1.34771
9070920		2.1000E-02							
	TH-232			activity mBq	activity mCi	activity Ci	SNM	source	
19980		1.822E-001	2.5844E-01	8.6739E-02	2.3443E-03	2.3443E-06	grams	kg	0.705
grams							2.1312E+01	2.1312E-02	
9070920		1.1000E-07							
	U-234			activity mBq	activity mCi	activity Ci	SNM	source	
19980		3.117E+000	2.7679E+00	9.2897E-01	2.5107E-02	2.5107E-05	grams	kg	1.12613
grams							4.0496E-03	4.0496E-06	
9070920		6.2000E-03							
	U-235			activity mBq	activity mCi	activity Ci	SNM	source	
19980		2.213E-001	2.8335E-01	9.5101E-02	2.5703E-03	2.5703E-06	grams	kg	0.781
grams							1.1683E+00	1.1683E-03	
9070920		2.2000E-06							
	U-238			activity mBq	activity mCi	activity Ci	SNM	source	
19980		3.117E+000	4.2065E+00	1.4118E+00	3.8157E-02	3.8157E-05	grams	kg	0.741
grams							1.1223E+02	1.1223E-01	
9070920		3.4000E-07							

Totals for all flag 1 data

			corrected	activity mBq	activity mCi	activity Ci	SNM	source	
19980		7.7859E+00	8.7699E+00	2.9619E+00	8.0052E-02	8.0052E-05	grams	kg	flag1 data
			pCi/g	541 will be < than the 540 (MDA not added)			1.1683E+00	1.3354E-01	
158.5714286				data for NORM					
	U-nat		corrected pCi/g	activity mBq	activity mCi	activity Ci		source	
		3.3383E+00	4.4898E+00	1.5069E+00	4.0727E-02	4.0727E-05		kg	
								5.7362E-02	
		7.1000E-07							

U-nat		corrected pCi/g	activity mBq	activity mCi	activity Ci		source	
	7.7859E+00	8.7699E+00	2.9619E+00	8.0052E-02	8.0052E-05		kg total	norm data
							7.8678E-02	

X

container #
9122

shipping check sheet (For Form 540)

	Ac-227		corrected	activity mBq	activity mCi	activity Ci	SNM	source	
		8.290E-002	8.290E-002	1.7379E-02	4.6970E-04	4.6970E-07	grams	kg	
grams			pCi/g				6.5237E-09	6.5237E-12	
5665920		7.2000E+01							
	Pa-231			activity mBq	activity mCi	activity Ci	SNM	source	
12480		2.010E-001	2.010E-001	4.2137E-02	1.1388E-03	1.1388E-06	grams	kg	
grams							2.4231E-05	2.4231E-08	
5665920		4.7000E-02							
	Ra-223			activity mBq	activity mCi	activity Ci	SNM	source	
12480		1.414E-001	1.414E-001	2.9643E-02	8.0116E-04	8.0116E-07	grams	kg	
grams							1.5709E-11	1.5709E-14	
5665920		5.1000E+04							
	Ra-226			activity mBq	activity mCi	activity Ci	SNM	source	
12480		2.252E-001	1.6350E-01	3.4275E-02	9.2635E-04	9.2635E-07	grams	kg	1.37741
grams							9.2635E-07	9.2635E-10	
5665920		1.0000E+00							
	Ra228			activity mBq	activity mCi	activity Ci	SNM	source	
12480		4.077E-001	5.7830E-01	1.2123E-01	3.2766E-03	3.2768E-06	grams	kg	0.705
grams							1.2136E-08	1.2136E-11	
5665920		2.7000E+02							
	TH-227			activity mBq	activity mCi	activity Ci	SNM	source	
12480		8.290E-002	8.290E-002	1.7379E-02	4.6970E-04	4.6970E-07	grams	kg	
grams							1.5152E-11	1.5152E-14	
5665920		3.1000E+04							
	Th-228			activity mBq	activity mCi	activity Ci	SNM	source	
12480		3.672E-001	6.6316E-01	1.3902E-01	3.7574E-03	3.7574E-06	grams	kg	
grams							4.5822E-09	4.5822E-12	0.55371
5665920		8.2000E+02							
	Th-230			activity mBq	activity mCi	activity Ci	SNM	source	
12480		4.077E-001	3.0251E-01	6.3419E-02	1.7140E-03	1.7140E-06	grams	kg	
grams							8.1620E-05	8.1620E-08	1.34771
5665920		2.1000E-02							
	TH-232			activity mBq	activity mCi	activity Ci	SNM	source	
12480		4.077E-001	5.7830E-01	1.2123E-01	3.2766E-03	3.2768E-06	grams	kg	0.705
grams							2.9787E+01	2.9787E-02	
5665920		1.1000E-07							
	U-234			activity mBq	activity mCi	activity Ci	SNM	source	
12480		4.095E+000	3.6363E+00	7.6232E-01	2.0603E-02	2.0603E-05	grams	kg	1.12613
grams							3.3231E-03	3.3231E-06	
5665920		6.2000E-03							
	U-235			activity mBq	activity mCi	activity Ci	SNM	source	
12480		3.914E-001	5.0115E-01	1.0508E-01	2.8395E-03	2.8395E-06	grams	kg	0.781
grams							1.2907E+00	1.2907E-03	
5665920		2.2000E-06							
	U-238			activity mBq	activity mCi	activity Ci	SNM	source	
12480		4.095E+000	5.5263E+00	1.1585E+00	3.1312E-02	3.1312E-05	grams	kg	0.741
grams							9.2093E+01	9.2093E-02	
5665920		3.4000E-07							

Totals for all flag 1 data

			corrected	activity mBq	activity mCi	activity Ci	SNM	source	
12480		1.0905E+01	1.2375E+01	2.6116E+00	7.0585E-02	7.0585E-05	grams	kg	flag1 data
			pCi/g	541 will be < than the 540 (MDA not added)			1.2907E+00	1.2188E-01	
99.04761905				data for NORM					
	U-nat		corrected pCi/g	activity mBq	activity mCi	activity Ci		source	
		4.4864E+00	6.0275E+00	1.2636E+00	3.4151E-02	3.4151E-05		kg	
								4.8100E-02	
		7.1000E-07							

U-nat		corrected pCi/g	activity mBq	activity mCi	activity Ci		source	
	1.0905E+01	1.2375E+01	2.6116E+00	7.0585E-02	7.0585E-05		kg total	norm data
							7.7891E-02	

X

container #
9135

shipping check sheet (For Form 540)

*b3M

	Ac-227		corrected	activity mBq	activity mCi	activity Ci	SNM	source	
		6.200E-002	6.200E-002	2.3006E-02	6.2179E-04	6.2179E-07	grams	kg	
grams			pCi/g				8.6360E-09	8.6360E-12	
10028860		7.2000E+01							
	Pa-231			activity mBq	activity mCi	activity Ci	SNM	source	
22090		2.407E-001	2.407E-001	8.9316E-02	2.4139E-03	2.4139E-06	grams	kg	
grams							5.1361E-05	5.1361E-08	
10028860		4.7000E-02							
	Ra-223			activity mBq	activity mCi	activity Ci	SNM	source	
22090		5.632E-002	5.632E-002	2.0899E-02	5.6483E-04	5.6483E-07	grams	kg	
grams							1.1075E-11	1.1075E-14	
10028860		5.1000E+04							
	Ra-226			activity mBq	activity mCi	activity Ci	SNM	source	
22090		2.441E-001	1.7722E-01	6.5759E-02	1.7773E-03	1.7773E-06	grams	kg	1.37741
grams							1.7773E-06	1.7773E-09	
10028860		1.0000E+00							
	Ra228			activity mBq	activity mCi	activity Ci	SNM	source	
22090		4.041E-001	5.7319E-01	2.1269E-01	5.7485E-03	5.7485E-06	grams	kg	0.705
grams							2.1291E-08	2.1291E-11	
10028860		2.7000E+02							
	TH-227			activity mBq	activity mCi	activity Ci	SNM	source	
22090		6.200E-002	6.200E-002	2.3006E-02	6.2179E-04	6.2179E-07	grams	kg	
grams							2.0058E-11	2.0058E-14	
10028860		3.1000E+04							
	Th-228			activity mBq	activity mCi	activity Ci	SNM	source	
22090		3.086E-001	5.5733E-01	2.0681E-01	5.5894E-03	5.5894E-06	grams	kg	
grams							6.8163E-09	6.8163E-12	0.55371
10028860		8.2000E+02							
	Th-230			activity mBq	activity mCi	activity Ci	SNM	source	
22090		4.041E-001	2.9984E-01	1.1126E-01	3.0071E-03	3.0071E-06	grams	kg	
grams							1.4319E-04	1.4319E-07	1.34771
10028860		2.1000E-02							
	TH-232			activity mBq	activity mCi	activity Ci	SNM	source	
22090		4.041E-001	5.7319E-01	2.1269E-01	5.7485E-03	5.7485E-06	grams	kg	0.705
grams							5.2259E+01	5.2259E-02	
10028860		1.1000E-07							
	U-234			activity mBq	activity mCi	activity Ci	SNM	source	
22090		1.275E+000	1.1322E+00	4.2012E-01	1.1355E-02	1.1355E-05	grams	kg	1.12613
grams							1.8314E-03	1.8314E-06	
10028860		6.2000E-03							
	U-235			activity mBq	activity mCi	activity Ci	SNM	source	
22090		3.320E-001	4.2510E-01	1.5774E-01	4.2632E-03	4.2632E-06	grams	kg	0.781
grams							1.9378E+00	1.9378E-03	
10028860		2.2000E-06							
	U-238			activity mBq	activity mCi	activity Ci	SNM	source	
22090		1.275E+000	1.7206E+00	6.3848E-01	1.7256E-02	1.7256E-05	grams	kg	0.741
grams							5.0753E+01	5.0753E-02	
10028860		3.4000E-07							

Totals for all flag 1 data

			corrected	activity mBq	activity mCi	activity Ci	SNM	source	
22090		5.0680E+00	5.8177E+00	2.1818E+00	5.8967E-02	5.8967E-05	grams	kg	flag1 data
			pCi/g	541 will be < than the 540 (MDA not added)			1.9378E+00	1.0301E-01	
175.3174603				data for NORM					
	U-nat		corrected pCi/g	activity mBq	activity mCi	activity Ci		source	
		1.6070E+00	2.1457E+00	7.9622E-01	2.1519E-02	2.1519E-05		kg	
								3.0309E-02	
		7.1000E-07							

U-nat		corrected pCi/g	activity mBq	activity mCi	activity Ci		source	
	5.0680E+00	5.8177E+00	2.1818E+00	5.8967E-02	5.8967E-05		kg total	norm data
							8.2570E-02	

X

container #
9136

shipping check sheet (For Form 540)

	Ac-227		corrected	activity mBq	activity mCi	activity Ci	SNM	source	
		1.204E-001	1.204E-001	4.7913E-02	1.2949E-03	1.2949E-06	grams	kg	
grams			pCi/g				1.7985E-08	1.7985E-11	
10755260		7.2000E+01							
	Pa-231			activity mBq	activity mCi	activity Ci	SNM	source	
23690		5.200E-001	5.200E-001	2.0693E-01	5.5927E-03	5.5927E-06	grams	kg	
grams							1.1899E-04	1.1899E-07	
10755260		4.7000E-02							
	Ra-223			activity mBq	activity mCi	activity Ci	SNM	source	
23690		1.595E-001	1.595E-001	6.3472E-02	1.7155E-03	1.7155E-06	grams	kg	
grams							3.3637E-11	3.3637E-14	
10755260		5.1000E+04							
	Ra-226			activity mBq	activity mCi	activity Ci	SNM	source	
23690		3.469E-001	2.5185E-01	1.0022E-01	2.7087E-03	2.7087E-06	grams	kg	1.37741
grams							2.7087E-06	2.7087E-09	
10755260		1.0000E+00							
	Ra228			activity mBq	activity mCi	activity Ci	SNM	source	
23690		4.363E-001	6.1887E-01	2.4627E-01	6.6561E-03	6.6561E-06	grams	kg	0.705
grams							2.4652E-08	2.4652E-11	
10755260		2.7000E+02							
	Th-227			activity mBq	activity mCi	activity Ci	SNM	source	
23690		1.204E-001	1.204E-001	4.7913E-02	1.2949E-03	1.2949E-06	grams	kg	
grams							4.1772E-11	4.1772E-14	
10755260		3.1000E+04							
	Th-228			activity mBq	activity mCi	activity Ci	SNM	source	
23690		4.306E-001	7.7766E-01	3.0947E-01	8.3640E-03	8.3640E-06	grams	kg	
grams							1.0200E-08	1.0200E-11	0.55371
10755260		8.2000E+02							
	Th-230			activity mBq	activity mCi	activity Ci	SNM	source	
23690		4.363E-001	3.2373E-01	1.2883E-01	3.4818E-03	3.4818E-06	grams	kg	
grams							1.6580E-04	1.6580E-07	1.34771
10755260		2.1000E-02							
	TH-232			activity mBq	activity mCi	activity Ci	SNM	source	
23690		4.363E-001	6.1887E-01	2.4627E-01	6.6561E-03	6.6561E-06	grams	kg	0.705
grams							6.0510E+01	6.0510E-02	
10755260		1.1000E-07							
	U-234			activity mBq	activity mCi	activity Ci	SNM	source	
23690		4.729E-001	4.1993E-01	1.6711E-01	4.5165E-03	4.5165E-06	grams	kg	1.12613
grams							7.2847E-04	7.2847E-07	
10755260		6.2000E-03							
	U-235			activity mBq	activity mCi	activity Ci	SNM	source	
23690		3.074E-001	3.9360E-01	1.5663E-01	4.2332E-03	4.2332E-06	grams	kg	0.781
grams							1.9242E+00	1.9242E-03	
10755260		2.2000E-06							
	U-238			activity mBq	activity mCi	activity Ci	SNM	source	
23690		4.729E-001	6.3819E-01	2.5396E-01	6.8639E-03	6.8639E-06	grams	kg	0.741
grams							2.0188E+01	2.0188E-02	
10755260		3.4000E-07							

Totals for all flag 1 data

			corrected	activity mBq	activity mCi	activity Ci	SNM	source	
23690		4.2599E+00	4.8426E+00	1.9750E+00	5.3378E-02	5.3378E-05	grams	kg	flag1 data
			pCi/g	541 will be < than the 540 (MDA not added)			1.9242E+00	8.0699E-02	
188.015873				data for NORM					
	U-nat		corrected pCi/g	activity mBq	activity mCi	activity Ci		source	
		7.8030E-01	1.0318E+00	4.1060E-01	1.1097E-02	1.1097E-05		kg	
								1.5630E-02	
		7.1000E-07							

	U-nat		corrected pCi/g	activity mBq	activity mCi	activity Ci		source	
		4.2599E+00	4.8426E+00	1.9750E+00	5.3378E-02	5.3378E-05		kg total	norm data
								7.6140E-02	

X

container #
9139

shipping check sheet (For Form 540)

	Ac-227		corrected	activity mBq	activity mCi	activity Ci	SNM	source	
		9.650E-002	9.650E-002	2.7881E-02	7.5355E-04	7.5355E-07	grams	kg	
grams			pCi/g				1.0466E-08	1.0466E-11	
7808800		7.2000E+01							
	Pa-231			activity mBq	activity mCi	activity Ci	SNM	source	
17200		2.060E-001	2.060E-001	5.9519E-02	1.6088E-03	1.6088E-06	grams	kg	
grams							3.4226E-05	3.4226E-08	
7808800		4.7000E-02							
	Ra-223			activity mBq	activity mCi	activity Ci	SNM	source	
17200		4.069E-002	4.069E-002	1.1756E-02	3.1774E-04	3.1774E-07	grams	kg	
grams							6.2302E-12	6.2302E-15	
7808800		5.1000E+04							
	Ra-226			activity mBq	activity mCi	activity Ci	SNM	source	
17200		3.555E-001	2.5809E-01	7.4570E-02	2.0154E-03	2.0154E-06	grams	kg	1.37741
grams							2.0154E-06	2.0154E-09	
7808800		1.0000E+00							
	Ra228			activity mBq	activity mCi	activity Ci	SNM	source	
17200		7.761E-001	1.1009E+00	3.1806E-01	8.5963E-03	8.5963E-06	grams	kg	0.705
grams							3.1838E-08	3.1838E-11	
7808800		2.7000E+02							
	TH-227			activity mBq	activity mCi	activity Ci	SNM	source	
17200		9.650E-002	9.650E-002	2.7881E-02	7.5355E-04	7.5355E-07	grams	kg	
grams							2.4308E-11	2.4308E-14	
7808800		3.1000E+04							
	Th-228			activity mBq	activity mCi	activity Ci	SNM	source	
17200		7.599E-001	1.3724E+00	3.9652E-01	1.0717E-02	1.0717E-05	grams	kg	
grams							1.3069E-08	1.3069E-11	0.55371
7808800		8.2000E+02							
	Th-230			activity mBq	activity mCi	activity Ci	SNM	source	
17200		7.761E-001	5.7587E-01	1.6638E-01	4.4968E-03	4.4968E-06	grams	kg	
grams							2.1413E-04	2.1413E-07	1.34771
7808800		2.1000E-02							
	TH-232			activity mBq	activity mCi	activity Ci	SNM	source	
17200		7.761E-001	1.1009E+00	3.1806E-01	8.5963E-03	8.5963E-06	grams	kg	0.705
grams							7.8148E+01	7.8148E-02	
7808800		1.1000E-07							
	U-234			activity mBq	activity mCi	activity Ci	SNM	source	
17200		9.659E+000	8.5772E+00	2.4782E+00	6.6977E-02	6.6977E-05	grams	kg	1.12613
grams							1.0803E-02	1.0803E-05	
7808800		6.2000E-03							
	U-235			activity mBq	activity mCi	activity Ci	SNM	source	
17200		5.525E-001	7.0743E-01	2.0439E-01	5.5242E-03	5.5242E-06	grams	kg	0.781
grams							2.5110E+00	2.5110E-03	
7808800		2.2000E-06							
	U-238			activity mBq	activity mCi	activity Ci	SNM	source	
17200		9.659E+000	1.3035E+01	3.7662E+00	1.0179E-01	1.0179E-04	grams	kg	0.741
grams							2.9938E+02	2.9938E-01	
7808800		3.4000E-07							

Totals for all flag 1 data

			corrected	activity mBq	activity mCi	activity Ci	SNM	source	
17200		2.3754E+01	2.7071E+01	7.8494E+00	2.1214E-01	2.1214E-04	grams	kg	flag1 data
			pCi/g	541 will be < than the 540 (MDA not added)			2.5110E+00	3.7754E-01	
136.5079365				data for NORM					
	U-nat		corrected pCi/g	activity mBq	activity mCi	activity Ci		source	
		1.0212E+01	1.3743E+01	3.9706E+00	1.0731E-01	1.0731E-04		kg	
								1.5114E-01	
		7.1000E-07							

U-nat		corrected pCi/g	activity mBq	activity mCi	activity Ci		source	
	2.3754E+01	2.7071E+01	7.8494E+00	2.1214E-01	2.1214E-04		kg total	norm data
							2.2930E-01	X

container #
9127

shipping check sheet (For Form 540)

	Ac-227		corrected	activity mBq	activity mCi	activity Ci	SNM	source	
		5.733E-002	5.733E-002	1.7729E-02	4.7917E-04	4.7917E-07	grams	kg	
grams			pCi/g				6.6552E-09	6.6552E-12	
8358140		7.2000E+01							
	Pa-231			activity mBq	activity mCi	activity Ci	SNM	source	
18410		5.359E-001	5.359E-001	1.6573E-01	4.4791E-03	4.4791E-06	grams	kg	
grams							9.5301E-05	9.5301E-08	
8358140		4.7000E-02							
	Ra-223			activity mBq	activity mCi	activity Ci	SNM	source	
18410		9.782E-002	9.782E-002	3.0251E-02	8.1759E-04	8.1759E-07	grams	kg	
grams							1.6031E-11	1.6031E-14	
8358140		5.1000E+04							
	Ra-226			activity mBq	activity mCi	activity Ci	SNM	source	
18410		3.499E-001	2.5403E-01	7.8558E-02	2.1232E-03	2.1232E-06	grams	kg	1.37741
grams							2.1232E-06	2.1232E-09	
8358140		1.0000E+00							
	Ra228			activity mBq	activity mCi	activity Ci	SNM	source	
18410		4.801E-001	6.8099E-01	2.1060E-01	5.6918E-03	5.6918E-06	grams	kg	0.705
grams							2.1081E-08	2.1081E-11	
8358140		2.7000E+02							
	Th-227			activity mBq	activity mCi	activity Ci	SNM	source	
18410		5.733E-002	5.733E-002	1.7729E-02	4.7917E-04	4.7917E-07	grams	kg	
grams							1.5457E-11	1.5457E-14	
8358140		3.1000E+04							
	Th-228			activity mBq	activity mCi	activity Ci	SNM	source	
18410		3.524E-001	6.3643E-01	1.9682E-01	5.3194E-03	5.3194E-06	grams	kg	
grams							6.4871E-09	6.4871E-12	0.55371
8358140		8.2000E+02							
	Th-230			activity mBq	activity mCi	activity Ci	SNM	source	
18410		4.801E-001	3.5623E-01	1.1017E-01	2.9775E-03	2.9775E-06	grams	kg	
grams							1.4178E-04	1.4178E-07	1.34771
8358140		2.1000E-02							
	Th-232			activity mBq	activity mCi	activity Ci	SNM	source	
18410		4.801E-001	6.8099E-01	2.1060E-01	5.6918E-03	5.6918E-06	grams	kg	0.705
grams							5.1744E+01	5.1744E-02	
8358140		1.1000E-07							
	U-234			activity mBq	activity mCi	activity Ci	SNM	source	
18410		2.220E+000	1.9714E+00	6.0984E-01	1.6477E-02	1.6477E-05	grams	kg	1.12613
grams							2.6576E-03	2.6576E-06	
8358140		6.2000E-03							
	U-235			activity mBq	activity mCi	activity Ci	SNM	source	
18410		2.553E-001	3.2689E-01	1.0109E-01	2.7322E-03	2.7322E-06	grams	kg	0.781
grams							1.2419E+00	1.2419E-03	
8358140		2.2000E-06							
	U-238			activity mBq	activity mCi	activity Ci	SNM	source	
18410		2.220E+000	2.9960E+00	9.2650E-01	2.5041E-02	2.5041E-05	grams	kg	0.741
grams							7.3649E+01	7.3649E-02	
8358140		3.4000E-07							

Totals for all flag 1 data

			corrected	activity mBq	activity mCi	activity Ci	SNM	source	
18410		7.5863E+00	8.5939E+00	2.6754E+00	7.2308E-02	7.2308E-05	grams	kg	flag1 data
			pCi/g	541 will be < than the 540 (MDA not added)			1.2419E+00	1.2540E-01	
146.1111111				data for NORM					
	U-nat		corrected pCi/g	activity mBq	activity mCi	activity Ci		source	
		2.4753E+00	3.3228E+00	1.0276E+00	2.7773E-02	2.7773E-05		kg	
								3.9117E-02	
		7.1000E-07							

	U-nat		corrected pCi/g	activity mBq	activity mCi	activity Ci		source	
		7.5863E+00	8.5939E+00	2.6754E+00	7.2308E-02	7.2308E-05		kg total	norm data
								9.0863E-02	

X

container #
9125

shipping check sheet (For Form 540)

	Ac-227		corrected	activity mBq	activity mCi	activity Ci	SNM	source	
		4.310E-002	4.310E-002	1.2800E-02	3.4595E-04	3.4595E-07	grams	kg	
grams			pCi/g				4.8049E-09	4.8049E-12	
8026720		7.2000E+01							
	Pa-231			activity mBq	activity mCi	activity Ci	SNM	source	
17680		2.463E-001	2.463E-001	7.3148E-02	1.9770E-03	1.9770E-06	grams	kg	
grams							4.2063E-05	4.2063E-08	
8026720		4.7000E-02							
	Ra-223			activity mBq	activity mCi	activity Ci	SNM	source	
17680		3.943E-002	3.943E-002	1.1710E-02	3.1649E-04	3.1649E-07	grams	kg	
grams							6.2058E-12	6.2058E-15	
8026720		5.1000E+04							
	Ra-226			activity mBq	activity mCi	activity Ci	SNM	source	
17680		1.803E-001	1.3090E-01	3.8875E-02	1.0507E-03	1.0507E-06	grams	kg	1.37741
grams							1.0507E-06	1.0507E-09	
8026720		1.0000E+00							
	Ra228			activity mBq	activity mCi	activity Ci	SNM	source	
17680		4.286E-001	6.0794E-01	1.8055E-01	4.8798E-03	4.8798E-06	grams	kg	0.705
grams							1.8073E-08	1.8073E-11	
8026720		2.7000E+02							
	TH-227			activity mBq	activity mCi	activity Ci	SNM	source	
17680		4.310E-002	4.310E-002	1.2800E-02	3.4595E-04	3.4595E-07	grams	kg	
grams							1.1160E-11	1.1160E-14	
8026720		3.1000E+04							
	Th-228			activity mBq	activity mCi	activity Ci	SNM	source	
17680		4.215E-001	7.6123E-01	2.2608E-01	6.1102E-03	6.1102E-06	grams	kg	
grams							7.4514E-09	7.4514E-12	0.55371
8026720		8.2000E+02							
	Th-230			activity mBq	activity mCi	activity Ci	SNM	source	
17680		4.286E-001	3.1802E-01	9.4449E-02	2.5527E-03	2.5527E-06	grams	kg	
grams							1.2156E-04	1.2156E-07	1.34771
8026720		2.1000E-02							
	TH-232			activity mBq	activity mCi	activity Ci	SNM	source	
17680		4.286E-001	6.0794E-01	1.8055E-01	4.8798E-03	4.8798E-06	grams	kg	0.705
grams							4.4362E+01	4.4362E-02	
8026720		1.1000E-07							
	U-234			activity mBq	activity mCi	activity Ci	SNM	source	
17680		1.010E+001	8.9688E+00	2.6638E+00	7.1990E-02	7.1990E-05	grams	kg	1.12613
grams							1.1611E-02	1.1611E-05	
8026720		6.2000E-03							
	U-235			activity mBq	activity mCi	activity Ci	SNM	source	
17680		6.439E-001	8.2446E-01	2.4485E-01	6.6177E-03	6.6177E-06	grams	kg	0.781
grams							3.0080E+00	3.0080E-03	
8026720		2.2000E-06							
	U-238			activity mBq	activity mCi	activity Ci	SNM	source	
17680		1.010E+001	1.3630E+01	4.0480E+00	1.0941E-01	1.0941E-04	grams	kg	0.741
grams							3.2178E+02	3.2178E-01	
8026720		3.4000E-07							

Totals for all flag 1 data

			corrected	activity mBq	activity mCi	activity Ci	SNM	source	
17680		2.3103E+01	2.6178E+01	7.7875E+00	2.1047E-01	2.1047E-04	grams	kg	flag1 data
			pCi/g	541 will be < than the 540 (MDA not added)			3.0080E+00	3.6616E-01	
140.3174603				data for NORM					
	U-nat		corrected pCi/g	activity mBq	activity mCi	activity Ci		source	
		1.0744E+01	1.4455E+01	4.2929E+00	1.1602E-01	1.1602E-04		kg	
								1.6341E-01	
		7.1000E-07							

U-nat		corrected pCi/g	activity mBq	activity mCi	activity Ci		source	
	2.3103E+01	2.6178E+01	7.7875E+00	2.1047E-01	2.1047E-04		kg total	norm data
							2.0779E-01	

X

container #
9143

shipping check sheet (For Form 540)

	Ac-227		corrected	activity mBq	activity mCi	activity Ci	SNM	source	
		6.924E-002	6.924E-002	2.0552E-02	5.5548E-04	5.5546E-07	grams	kg	
grams			pCi/g				7.7147E-09	7.7147E-12	
8022180		7.2000E+01							
	Pa-231			activity mBq	activity mCi	activity Ci	SNM	source	
17670		4.588E-001	4.588E-001	1.3618E-01	3.6806E-03	3.6806E-06	grams	kg	
grams							7.8310E-05	7.8310E-08	
8022180		4.7000E-02							
	Ra-223			activity mBq	activity mCi	activity Ci	SNM	source	
17670		5.241E-002	5.241E-002	1.5556E-02	4.2044E-04	4.2044E-07	grams	kg	
grams							8.2440E-12	8.2440E-15	
8022180		5.1000E+04							
	Ra-226			activity mBq	activity mCi	activity Ci	SNM	source	
17670		3.560E-001	2.5846E-01	7.6715E-02	2.0734E-03	2.0734E-06	grams	kg	1.37741
grams							2.0734E-06	2.0734E-09	
8022180		1.0000E+00							
	Ra228			activity mBq	activity mCi	activity Ci	SNM	source	
17670		4.995E-001	7.0851E-01	2.1030E-01	5.6838E-03	5.6838E-06	grams	kg	0.705
grams							2.1051E-08	2.1051E-11	
8022180		2.7000E+02							
	TH-227			activity mBq	activity mCi	activity Ci	SNM	source	
17670		6.924E-002	6.924E-002	2.0552E-02	5.5548E-04	5.5546E-07	grams	kg	
grams							1.7918E-11	1.7918E-14	
8022180		3.1000E+04							
	Th-228			activity mBq	activity mCi	activity Ci	SNM	source	
17670		4.533E-001	8.1866E-01	2.4300E-01	6.5674E-03	6.5674E-06	grams	kg	
grams							8.0091E-09	8.0091E-12	0.55371
8022180		8.2000E+02							
	Th-230			activity mBq	activity mCi	activity Ci	SNM	source	
17670		4.995E-001	3.7063E-01	1.1001E-01	2.9733E-03	2.9733E-06	grams	kg	
grams							1.4158E-04	1.4158E-07	1.34771
8022180		2.1000E-02							
	TH-232			activity mBq	activity mCi	activity Ci	SNM	source	
17670		4.995E-001	7.0851E-01	2.1030E-01	5.6838E-03	5.6838E-06	grams	kg	0.705
grams							5.1671E+01	5.1671E-02	
8022180		1.1000E-07							
	U-234			activity mBq	activity mCi	activity Ci	SNM	source	
17670		2.034E+000	1.8062E+00	5.3611E-01	1.4490E-02	1.4490E-05	grams	kg	1.12613
grams							2.3370E-03	2.3370E-06	
8022180		6.2000E-03							
	U-235			activity mBq	activity mCi	activity Ci	SNM	source	
17670		2.801E-001	3.5864E-01	1.0645E-01	2.8771E-03	2.8771E-06	grams	kg	0.781
grams							1.3078E+00	1.3078E-03	
8022180		2.2000E-06							
	U-238			activity mBq	activity mCi	activity Ci	SNM	source	
17670		2.034E+000	2.7449E+00	8.1475E-01	2.2020E-02	2.2020E-05	grams	kg	0.741
grams							6.4766E+01	6.4766E-02	
8022180		3.4000E-07							

Totals for all flag 1 data

			corrected	activity mBq	activity mCi	activity Ci	SNM	source	
17670		7.3056E+00	8.3550E+00	2.5005E+00	6.7581E-02	6.7581E-05	grams	kg	flag1 data
			pCi/g	541 will be < than the 540 (MDA not added)			1.3078E+00	1.1644E-01	
140.2380952				data for NORM					
	U-nat		corrected pCi/g	activity mBq	activity mCi	activity Ci		source	
		2.3141E+00	3.1036E+00	9.2121E-01	2.4897E-02	2.4897E-05		kg	
								3.5067E-02	
		7.1000E-07							

U-nat		corrected pCi/g	activity mBq	activity mCi	activity Ci		source	
	7.3056E+00	8.3550E+00	2.5005E+00	6.7581E-02	6.7581E-05		kg total	norm data
							8.6740E-02	

X

Posillico Bros. Asphalt Co.

1610 New Highway, Farmingdale, N.Y. 11735
Plant Tele: 293-2620, 2621

HOT STORAGE

12:41 10-01-04 TICKET NUMBER 9122

12560 lb GROSS

Posillico Bros. Asphalt Co.

1610 New Highway, Farmingdale, N.Y. 11735
Plant Tele: 293-2620, 2621

HOT STORAGE

13:28 10-05-04 TICKET NUMBER 9125

17760 lb GROSS

Posillico Bros. Asphalt Co.

1610 New Highway, Farmingdale, N.Y. 11735
Plant Tele: 293-2620, 2621

HOT STORAGE

15:47 9-23-04 TICKET NUMBER 9127

18490 lb GROSS

Posillico Bros. Asphalt Co.

1610 New Highway, Farmingdale, N.Y. 11735
Plant Tele: 293-2620, 2621

HOT STORAGE

13:38 10-05-04 TICKET NUMBER 9135

22170 lb GROSS

Posillico Bros. Asphalt Co.

1610 New Highway, Farmingdale, N.Y. 11735
Plant Tele: 293-2620, 2621

HOT STORAGE

13:47 10-05-04 TICKET NUMBER 9136

23770 lb GROSS

Posillico Bros. Asphalt Co.

1610 New Highway, Farmingdale, N.Y. 11735
Plant Tele: 293-2620, 2621

HOT STORAGE

15:51 10-05-04 TICKET NUMBER 9139

17280 lb GROSS

Posillico Bros. Asphalt Co.

1610 New Highway, Farmingdale, N.Y. 11735
Plant Tele: 293-2620, 2621

HOT STORAGE

13:02 10-20-04 TICKET NUMBER 9140

8880 lb GROSS

Posillico Bros. Asphalt Co.

1610 New Highway, Farmingdale, N.Y. 11735
Plant Tele: 293-2620, 2621

HOT STORAGE

14:28 10-05-04 TICKET NUMBER 9143

17750 lb GROSS

FORM 540 — Envirocare of Utah, Inc.

UNIFORM LOW-LEVEL RADIOACTIVE WASTE MANIFEST

SHIPPING PAPER

1 EMERGENCY TELEPHONE NUMBER (Include Area Code): 1-800-424-9300

ORGANIZATION: Chemtrec

2 IS THIS AN "EXCLUSIVE USE" SHIPMENT? ☐ YES ☑ NO

3 TOTAL NUMBER OF PACKAGES IDENTIFIED ON THIS MANIFEST ==> 11

4. DOES EPA REGULATED WASTE REQUIRING A MANIFEST ACCOMPANY THIS SHIPMENT? ☐ YES ☑ NO
If "Yes," provide Manifest Number ==>

EPA MANIFEST NUMBER

5. SHIPPER -- NAME AND FACILITY
GTEOSI
140 Cantiague Rock RD
Hicksville, NY 11801

SHIPPER I.D. NUMBER: 0840-01-980
☐ COLLECTOR
☐ PROCESSOR
☑ GENERATOR TYPE (Specify) I

Utah Generator Site Access Permit No.: 020 500 1352
SHIPMENT NUMBER: MHFX-5242

CONTACT: Jean Agostinelli
TELEPHONE NUMBER (Include Area Code): 516-932-9157

6. CARRIER -- Name and Address
Priority Transport Services, Inc.
391 Anthony Street
Schenectady, NY 12308

EPA I.D. NUMBER: NYR000104976
SHIPPING DATE: 05/11/2005

CONTACT: Dispatch
TELEPHONE (Include Area Code): 800-235-0069

SIGNATURE -- Authorized carrier acknowledging waste receipt
DATE: 5-11-05

7 FORM 540 AND 540A — PAGE 1 OF 3 PAGE(S)
FORM 541 AND 541A — 6 PAGE(S)
FORM 542 AND 542A — None PAGE(S)
ADDITIONAL INFORMATION — None PAGE(S)

8 MANIFEST NUMBER (Use this number on all continuation pages): 0840-01-980

9 CONSIGNEE - Name and Facility
Envirocare of Utah, Inc.
Clive Disposal Site (Bulk Waste Facility)
Interstate 80, Exit 49
Clive, UT 84029
L84523

CONTACT: Shipping and Receiving
TELEPHONE (Include Area Code): (435)884-0155

SIGNATURE -- Authorized consignee acknowledging waste receipt
DATE: 5-25-05

10 CERTIFICATION
This is to certify that the herein-named materials are properly classified, described, packaged, marked, and labeled and are in proper condition for transportation according to the applicable regulations of the Department of Transportation. This also certifies that the materials are classified, packaged, marked, and labeled and are in proper condition for transportation and disposal as described in accordance with the requirements of 10 CFR Parts 20 and 61, or equivalent state regulations.

AUTHORIZED SIGNATURE: [signature] TITLE: Broker DATE: 5-11-05

*b3M

11 U.S. DEPARTMENT OF TRANSPORTATION DESCRIPTION (Including proper shipping name, hazard class, UN ID number, and any additional information)	12 DOT LABEL "RADIOACTIVE"	13 INDEX	14 PHYSICAL AND CHEMICAL FORM	15 INDIVIDUAL RADIONUCLIDES	16 TOTAL PACKAGE ACTIVITY MBq	mCi	17 LSA/SCO CLASS	18 TOTAL WEIGHT OR VOLUME (Use appropriate units)	19. IDENTIFICATION NUMBER OF PACKAGE
Soil,DOT Non-Regulated, containing Radionuclides	NA	NA	Solid / OXIDES	Ac-227 Pa-231 Ra-223 Ra-226 Ra-228 Th-227 Th-228 Th-230	1.9363E+00	5.2332E-02	NA	14460 LBS; 114.13 FT3	9120
				Th-232 U-234 U-Nat					
Soil,DOT Non-Regulated, containing Radionuclides	NA	NA	Solid / OXIDES	Ac-227 Pa-231 Ra-223 Ra-226 Ra-228 Th-227 Th-228 Th-230	9.3236E-01	2.5199E-02	NA	10830 LBS; 85.32 FT3	9121
				Th-232 U-234 U-Nat					
Soil,DOT Non-Regulated, containing Radionuclides	NA	NA	Solid / OXIDES	Ac-227 Pa-231 Ra-223 Ra-226 Ra-228 Th-227 Th-228 Th-230	1.2397E+00	3.3506E-02	NA	18700 LBS; 147.78 FT3	9123
				Th-232 U-234 U-Nat					

FOR CONSIGNEE USE ONLY

___ Record Waste Description Inadequate
___ Contamination or Leakage Detected
___ Unexpected Exposure Rates Detected
___ Labels, Markings, etc. Inadequate
___ Container Integrity Inadequate
___ Other
✓ No Violations Detected on this Shipment

20. TERMS AND CONDITIONS

A HAZARDOUS MATERIALS Generator represents & warrants that Waste Material __ is (or) ✓ is not a hazardous waste as defined in 40 CFR 261. Where the material is a hazardous waste, this shipment is also accompanied by a separate and completed hazardous waste manifest, along with the appropriate land-disposal restriction notice and/or certification as required by 40 CFR 268.1.

B TITLE: Upon acceptance at the disposal site by Envirocare of Utah, Inc., and all appropriate regulatory authorities, title to the Waste Material which conforms to Generator's representations herein shall thereupon transfer from Generator and be vested in Envirocare of Utah, Inc.

C. WASTE MATERIAL. Generator represents and warrants that all data set forth in this (UNIFORM LOW-LEVEL RADIOACTIVE WASTE MANIFEST) are true and correct in all respects and in accordance with all applicable governmental laws, rules, regulations and Envirocare of Utah Inc.'s facility license.

D. INDEMNIFICATION: Generator agrees to indemnify Envirocare of Utah, Inc., its officers, employees and agents against all losses and liability whatsoever if such losses or liability results from the failure of the Waste Material to conform in all material respects to the data supplied on the (UNIFORM LOW-LEVEL RADIOACTIVE WASTE MANIFEST,) or if this shipment fails to meet the standards prescribed by the Department of Transportation or any governmental agency having jurisdiction over such matters.

FORM 540 (04-03)

FORM 540 — **Envirocare of Utah, Inc.**

UNIFORM LOW-LEVEL RADIOACTIVE WASTE MANIFEST

SHIPPING PAPER

1. EMERGENCY TELEPHONE NUMBER (Include Area Code): 1-800-424-9300

ORGANIZATION: Chemtrec

2. IS THIS AN "EXCLUSIVE USE" SHIPMENT? ☐ YES ☑ NO

3. TOTAL NUMBER OF PACKAGES IDENTIFIED ON THIS MANIFEST =====> 11

4. DOES EPA REGULATED WASTE REQUIRING A MANIFEST ACCOMPANY THIS SHIPMENT? ☐ YES ☑ NO
If "Yes," provide Manifest Number =====>

EPA MANIFEST NUMBER

5. SHIPPER -- NAME AND FACILITY
GTEOSI
140 Cantiague Rock RD
Hicksville, NY 11801

SHIPPER I.D NUMBER: 0840-01-980
☐ COLLECTOR
☐ PROCESSOR
☑ GENERATOR TYPE (Specify) I

Utah Generator Site Access Permit No.: 020 500 1352
SHIPMENT NUMBER: MHFX-5242

CONTACT: Jean Agostinelli
TELEPHONE NUMBER (Include Area Code): 516-932-9157

6. CARRIER -- Name and Address
Priority Transport Services, Inc.
391 Anthony Street
Schenectady, NY 12308

EPA I.D. NUMBER: NYR000104976
SHIPPING DATE: 05/11/2005

CONTACT: Dispatch
TELEPHONE (Include Area Code): 800-235-0069

SIGNATURE -- Authorized carrier acknowledging waste receipt
DATE: 5-11-05

7. FORM 540 AND 540A — PAGE 1 OF 3 PAGE(S)
FORM 541 AND 541A — 6 PAGE(S)
FORM 542 AND 542A — None PAGE(S)
ADDITIONAL INFORMATION — None PAGE(S)

8. MANIFEST NUMBER (Use this number on all continuation pages): 0840-01-980

9. CONSIGNEE - Name and Facility
Envirocare of Utah, Inc.
Clive Disposal Site (Bulk Waste Facility)
Interstate 80, Exit 49
Clive, UT 84029

CONTACT: Shipping and Receiving
TELEPHONE (Include Area Code): (435)884-0155

SIGNATURE -- Authorized consignee acknowledging waste receipt
DATE

10. CERTIFICATION
This is to certify that the herein-named materials are properly classified, described, packaged, marked, and labeled and are in proper condition for transportation according to the applicable regulations of the Department of Transportation. This also certifies that the materials are classified, packaged, marked, and labeled and are in proper condition for transportation and disposal as described in accordance with the requirements of 10 CFR Parts 20 and 61, or equivalent state regulations.

AUTHORIZED SIGNATURE: [signature] TITLE: Broker DATE: 5-11-05

11. U.S. DEPARTMENT OF TRANSPORTATION DESCRIPTION (Including proper shipping name, hazard class, UN ID number, and any additional information)	12. DOT LABEL "RADIOACTIVE"	13. INDEX	14. PHYSICAL AND CHEMICAL FORM	15. INDIVIDUAL RADIONUCLIDES				16. TOTAL PACKAGE ACTIVITY MBq	mCi	17. LSA/SCO CLASS	18. TOTAL WEIGHT OR VOLUME (Use appropriate units)	19. IDENTIFICATION NUMBER OF PACKAGE
Soil,DOT Non-Regulated, containing Radionuclides	NA	NA	Solid / OXIDES	Ac-227	Pa-231	Ra-223	Ra-226	1.9363E+00	5.2332E-02	NA	14460 LBS; 114.13 FT3	9120
				Ra-228	Th-227	Th-228	Th-230					
				Th-232	U-234	U-Nat						
Soil,DOT Non-Regulated, containing Radionuclides	NA	NA	Solid / OXIDES	Ac-227	Pa-231	Ra-223	Ra-226	9.3236E-01	2.5199E-02	NA	10830 LBS; 85.32 FT3	9121
				Ra-228	Th-227	Th-228	Th-230					
				Th-232	U-234	U-Nat						
Soil,DOT Non-Regulated, containing Radionuclides	NA	NA	Solid / OXIDES	Ac-227	Pa-231	Ra-223	Ra-226	1.2397E+00	3.3506E-02	NA	18700 LBS; 147.78 FT3	9123
				Ra-228	Th-227	Th-228	Th-230					
				Th-232	U-234	U-Nat						

FOR CONSIGNEE USE ONLY

____ Record Waste Description Inadequate
____ Contamination or Leakage Detected
____ Unexpected Exposure Rates Detected
____ Labels, Markings, etc. Inadequate
____ Container Integrity Inadequate
____ Other
____ No Violations Detected on this Shipment

20. TERMS AND CONDITIONS

A. HAZARDOUS MATERIALS: Generator represents & warrants that Waste Material __ is (or) ✓ is not a hazardous waste as defined in 40 CFR 261. Where the material is a hazardous waste, this shipment is also accompanied by a separate and completed hazardous waste manifest, along with the appropriate land-disposal restriction notice and/or certification as required by 40 CFR 268.1.

B. TITLE: Upon acceptance at the disposal site by Envirocare of Utah, Inc., and all appropriate regulatory authorities, title to the Waste Material which conforms to Generator's representations herein shall thereupon transfer from Generator and be vested in Envirocare of Utah, Inc.

C. WASTE MATERIAL: Generator represents and warrants that all data set forth in this (UNIFORM LOW-LEVEL RADIOACTIVE WASTE MANIFEST) are true and correct in all respects and in accordance with all applicable governmental laws, rules, regulations and Envirocare of Utah Inc.'s facility license.

D. INDEMNIFICATION: Generator agrees to indemnify Envirocare of Utah, Inc., its officers, employees and agents against all losses and liability whatsoever if such losses or liability results from the failure of the Waste Material to conform in all material respects to the data supplied on the (UNIFORM LOW-LEVEL RADIOACTIVE WASTE MANIFEST,) or if this shipment fails to meet the standards prescribed by the Department of Transportation or any governmental agency having jurisdiction over such matters.

FORM 540A

Envirocare of Utah, Inc.

8. MANIFEST NUMBER
(Use this number on all continuation pages)
0840-01-980

UNIFORM LOW-LEVEL RADIOACTIVE WASTE MANIFEST

SHIPPING PAPER (CONTINUATION)

11. U.S. DEPARTMENT OF TRANSPORTATION DESCRIPTION (Including proper shipping name, hazard class, UN ID number, and any additional information)	12. DOT LABEL "RADIOACTIVE"	13. TRANSPORT INDEX	14. PHYSICAL AND CHEMICAL FORM	15. INDIVIDUAL RADIONUCLIDES				16. TOTAL PACKAGE ACTIVITY MBq	mCi	17. LSA/SCO CLASS	18. TOTAL WEIGHT OR VOLUME (Use appropriate units)	19. IDENTIFICATION NUMBER OF PACKAGE
Soil,DOT Non-Regulated, containing Radionuclides	NA	NA	Solid / OXIDES	Ac-227	Pa-231	Ra-223	Ra-226	1.4504E+00	3.9199E-02	NA	16850 LBS; 133.1 FT3	9124
				Ra-228	Th-227	Th-228	Th-230					
				Th-232	U-234	U-Nat						
Soil,DOT Non-Regulated, containing Radionuclides	NA	NA	Solid / OXIDES	Ac-227	Pa-231	Ra-223	Ra-226	7.9594E-01	2.1512E-02	NA	22120 LBS; 174.92 FT3	9126
				Ra-228	Th-227	Th-228	Th-230					
				Th-232	U-234	U-Nat						
Soil,DOT Non-Regulated, containing Radionuclides	NA	NA	Solid / OXIDES	Ac-227	Pa-231	Ra-223	Ra-226	8.8545E+00	2.3931E-01	NA	13650 LBS; 107.7 FT3	9128
				Ra-228	Th-227	Th-228	Th-230					
				Th-232	U-234	U-Nat						
Soil,DOT Non-Regulated, containing Radionuclides	NA	NA	Solid / OXIDES	Ac-227	Pa-231	Ra-223	Ra-226	4.4891E+00	1.2133E-01	NA	19830 LBS; 156.75 FT3	9131
				Ra-228	Th-227	Th-228	Th-230					
				Th-232	U-234	U-Nat						
Soil,DOT Non-Regulated, containing Radionuclides	NA	NA	Solid / OXIDES	Ac-227	Pa-231	Ra-223	Ra-226	3.2673E+00	8.8306E-02	NA	19460 LBS; 153.81 FT3	9132
				Ra-228	Th-227	Th-228	Th-230					
				Th-232	U-234	U-Nat						
Soil,DOT Non-Regulated, containing Radionuclides	NA	NA	Solid / OXIDES	Ac-227	Pa-231	Ra-223	Ra-226	2.2704E+00	6.1362E-02	NA	22600 LBS; 178.73 FT3	9137
				Ra-228	Th-227	Th-228	Th-230					
				Th-232	U-234	U-Nat						
Soil,DOT Non-Regulated, containing Radionuclides	NA	NA	Solid / OXIDES	Ac-227	Pa-231	Ra-223	Ra-226	1.8654E+00	5.0416E-02	NA	11800 LBS; 93.02 FT3	9141
				Ra-228	Th-227	Th-228	Th-230					

FORM 540A

Envirocare of Utah, Inc.

UNIFORM LOW-LEVEL RADIOACTIVE WASTE MANIFEST

SHIPPING PAPER (CONTINUATION)

8. MANIFEST NUMBER
(Use this number on all continuation pages)
0840-01-980

11. U.S. DEPARTMENT OF TRANSPORTATION DESCRIPTION (Including proper shipping name, hazard class, UN ID number, and any additional information)	12. DOT LABEL "RADIOACTIVE"	13. TRANSPORT INDEX	14. PHYSICAL AND CHEMICAL FORM	15. INDIVIDUAL RADIONUCLIDES				16. TOTAL PACKAGE ACTIVITY MBq	mCi	17. LSA/SCO CLASS	18. TOTAL WEIGHT OR VOLUME (Use appropriate units)	19. IDENTIFICATION NUMBER OF PACKAGE
Soil,DOT Non-Regulated, containing Radionuclides	NA	NA	Solid / OXIDES	Th-232	U-234	U-Nat		1.8654E+00	5.0416E-02	NA	11800 LBS; 93.02 FT3	9141
Soil,DOT Non-Regulated, containing Radionuclides	NA	NA	Solid / OXIDES	Ac-227	Pa-231	Ra-223	Ra-226	1.1644E+00	3.1470E-02	NA	19950 LBS; 157.7 FT3	9220
				Ra-228	Th-227	Th-228	Th-230					
				Th-232	U-234	U-Nat						

FORM 540A (04-03)

FORM 541

Envirocare of Utah, Inc.

UNIFORM LOW-LEVEL RADIOACTIVE WASTE MANIFEST

CONTAINER AND WASTE DESCRIPTION

Additional Nuclear Regulatory Commission (NRC) Requirements for Control, Transfer and Disposal of Radioactive Waste

1. MANIFEST TOTALS

NUMBER OF PACKAGES/ DISPOSAL CONTAINERS	NET WASTE VOLUME	NET WASTE WEIGHT	SPECIAL NUCLEAR MATERIAL (grams) U-233	U-235	Pu	Total
11	m3 42.5592 ft3 1502.9600	kg 85896.7927 ton 94.6850	NP	NP	NP	NP

ACTIVITY	ALL NUCLIDES	TRITIUM	C-14	Tc-99	I-129	SOURCE (kg)	
MBq	2.7434E+01	NP	NP	NP	NP	(kg)	8.9502E-01
mCi	7.4147E-01	NP	NP	NP	NP	(tons)	9.8659E-04

2. MANIFEST NUMBER 0840-01-980

3. PAGE 1 OF 6 PAGE(S)

4. SHIPPER NAME GTEOSI

SHIPMENT ID NUMBER 0840-01-980

5. CONTAINER IDENTIFICATION NUMBER/ GENERATOR ID NUMBER(S)	6. CONTAINER DESCRIPTION (See Note 1 & Note 1A)	7. VOLUME (m3) / (ft3)	8. WASTE AND CONTAINER WEIGHT (kg) / (ton)	9. SURFACE RADIATION LEVEL (mSv/hr) / (mrem/hr)	10. SURFACE CONTAMINATION (MBq/100 cm2) / (dpm/100cm2) ALPHA	BETA-GAMMA	11. WASTE DESCRIPTOR (See Note 2 & Note 2A)	12. APPROXIMATE WASTE VOLUME(S) IN CONTAINER (m3) / (FT3)	13. SOLIDIFICATION OR STABILIZATION MEDIA (See Note 3)	14. CHEMICAL DESCRIPTION: CHEMICAL FORM/ CHELATING AGENT	WEIGHT % CHELATING AGENT IF > 0.1%	15. RADIOLOGICAL DESCRIPTION: INDIVIDUAL RADIONUCLIDES AND ACTIVITY (MBq) AND CONTAINER TOTAL; OR CONTAINER TOTAL ACTIVITY AND RADIONUCLIDE PERCENT: RADIONUCLIDES	pCi/gm	MBq	mCi	16. WASTE CLASSIFICATION AS-Class A Stable AU-Class A Unstable B-Class B C-Class C
9120/GTEOSI	19 Strong Tight Container Loaded in Gondola	3.2318	6558.9461	0.0001	<3.6740E-06	<3.6740E-05	22,59-CONCRETE,59 -MISC DEBRIS-HJ	3.2318	100	OXIDES/NONE	0.00	Ac-227	2.81900E-02	6.8095E-03	1.8404E-04	AU
		114.1300	7.2300	0.0100	<2.2000E+02	<2.2000E+03		114.1300				Pa-231	1.08500E-01	(2.6209E-02)	(7.0834E-04)	
												Ra-223	2.15100E-02	(5.1959E-03)	(1.4043E-04)	
												Ra-226	1.32713E-01	3.2058E-02	8.6642E-04	
												Ra-228	4.29929E-01	1.0385E-01	2.8068E-03	
												Th-227 [5.9367E-15 kg]	2.81900E-02	6.8095E-03	1.8404E-04	
												Th-228 [3.8679E-12 kg]	4.85814E-01	1.1735E-01	3.1717E-03	
												Th-230 [6.9917E-08 kg]	2.24900E-01	5.4327E-02	1.4683E-03	
												Th-232 [2.5516E-02 kg]	4.29929E-01	1.0385E-01	2.8068E-03	
												U-234 [2.4536E-06 kg]	2.33010E+00	5.6284E-01	1.5212E-02	
												U-Nat [3.4905E-02 kg]	3.79609E+00	9.1697E-01	2.4783E-02	
												Subtotal		1.9049E+00	5.1483E-02	
												Total		1.9049E+00	5.1483E-02	
												Source [6.0424E-02 kg]				
9121/GTEOSI	19 Strong Tight Container Loaded in Gondola	2.4160	4912.4057	0.0001	<3.6740E-06	<3.6740E-05	22,59-CONCRETE,59 -MISC DEBRIS-HJ	2.4160	100	OXIDES/NONE	0.00	Ac-227	7.29800E-02	1.3179E-02	3.5618E-04	AU
		85.3200	5.4150	0.0100	<2.2000E+02	<2.2000E+03		85.3200				Pa-231	2.37200E-01	(4.2835E-02)	(1.1577E-03)	
												Ra-223	4.06700E-02	(7.3441E-03)	(1.9849E-04)	
												Ra-226	2.34861E-01	4.2409E-02	1.1462E-03	
												Ra-228	6.31489E-01	1.1403E-01	3.0820E-03	
												Th-227 [1.1490E-14 kg]	7.29800E-02	1.3179E-02	3.5618E-04	
												Th-228 [4.6479E-12 kg]	7.80914E-01	1.4102E-01	3.8113E-03	
												Th-230 [7.6772E-08 kg]	3.30338E-01	5.9651E-02	1.6122E-03	
												Th-232 [2.8018E-02 kg]	6.31489E-01	1.1403E-01	3.0820E-03	

Note 1: Container Description Codes. For containers/ waste requiring disposal in approved structural over-packs the numerical code must be followed by "-OP."

1. Wooden Box or Crate
2. Metal Box
3. Plastic Drum or Pail
4. Metal Drum or Pail
5. Metal Tank or Liner
6. Concrete Tank or Liner
7. Polyethlene Tank or Liner
8. Fiberglass Tank or Liner
9. Demineralizer
10. Gas Cylinder
11. Bulk, Unpackaged Waste
12. Unpackaged Components
13. High Integrity Container
19. Other. Describe in Item 6. or additional page

Note 1A: Bulk Packaging Description Codes. (Choose one code as may be applicable.)

A Gondola
B Intermodal
C End-Dump
D Roll-off
E Seavan

NOTE 2: Waste Descriptor Codes. (Choose up to three which predominate by volume.)

20. Charcoal
21. Incinerator Ash
22. Soil
23. Gas
24. Oil
25. Aqueous Liquid
26. Filter Media
27. Mechanical Filter
28. EPA or State Hazardous
29. Demolition Rubble
30. Cation Ion-exchange Media
31. Anion Ion-exchange Media
32. Mixed Bed Ion-exchange Media
33. Contaminated Equipment
34. Organic Liquid (except oil)
35. Glassware or Labware
36. Sealed Source/Device
37. Paint or Plating
38. Evaporator Bottoms/Sludges/ Concentrates
39. Compactible Trash
40. Noncompactible Trash
41. Animal Carcass
42. Biological Material (except animal carcass)
43. Activated Material
59. Other. Describe in item 11. or additional page

NOTE 2A: Specific Waste Descriptions (Choose all applicable codes.)

G Dewatered
H Solid
I Combustible
J Non-combustible
K Air Filtration Filters
L Asbestos

Note3: Solidification and Stabilization Media Codes. (Choose up to three which predominate by volume.) For media meeting disposal site structural stability requirements, the numerical code must be followed by "-S." and the media vendor and brand name must also be identified

In Item 13. Code 100=NONE REQUIRED.

Solidification

90. Cement
91. Concrete (encapsulation)
92. Bitumen
93. Vinyl Chloride
94. Vinyl Ester Styrene
99. Other. Describe in item 13, or additional page
100. None Required.

FORM 541A

UNIFORM LOW-LEVEL RADIOACTIVE WASTE MANIFEST

CONTAINER AND WASTE DESCRIPTION (CONTINUATION)

Envirocare of Utah, Inc.

2. MANIFEST NUMBER 0840-01-980

DISPOSAL CONTAINER DESCRIPTION							WASTE DESCRIPTION FOR EACH WASTE TYPE IN CONTAINER									
							PHYSICAL DESCRIPTION			14. CHEMICAL DESCRIPTION		15. RADIOLOGICAL DESCRIPTION				16. WASTE CLASSIFICATION AS-Class A Stable AU-Class A Unstable B-Class B C-Class C
5. CONTAINER IDENTIFICATION NUMBER/ GENERATOR ID NUMBER(S)	6. CONTAINER DESCRIPTION (See Note 1 & Note 1A)	7. VOLUME (m3)/(ft3)	8. WASTE AND CONTAINER WEIGHT (kg)/(lon)	9. SURFACE RADIATION LEVEL (mSv/hr)/(mrem/hr)	10. SURFACE CONTAMINATION (MBq/100 cm2)/(dpm/100cm2) ALPHA	BETA-GAMMA	11. WASTE DESCRIPTOR (See Note 2 & Note 2A)	12. APPROXIMATE WASTE VOLUME(S) IN CONTAINER (m3)/(FT3)	13. SOLIDIFICATION OR STABILIZATION MEDIA (See Note 3)	CHEMICAL FORM/ CHELATING AGENT	WEIGHT % CHELATING AGENT IF > 0.1%	INDIVIDUAL RADIONUCLIDES AND ACTIVITY (MBq) AND CONTAINER TOTAL; OR CONTAINER TOTAL ACTIVITY AND RADIONUCLIDE PERCENT: RADIONUCLIDES	pCi/gm	MBq	mCi	
												U-234 [4.9707E-07 kg]	6.31455E-01	1.1403E-01	3.0818E-03	
												U-Nat [1.0303E-02 kg]	1.49883E+00	2.7066E-01	7.3150E-03	
												Subtotal		8.8219E-01	2.3843E-02	
												Total		8.8219E-01	2.3843E-02	
												Source [3.8321E-02 kg]				
9123/GTEOSI	19 Strong Tight Container Loaded in Gondola	4.1847	8482.1779	0.0001	<3.6740E-06	<3.6740E-05	22,59-CONCRETE,59 -MISC DEBRIS-HJ	4.1847	100	OXIDES/NONE	0.00	Ac-227	5.18000E-02	1.6202E-02	4.3789E-04	AU
												Pa-231	1.47500E-01	(4.6135E-02)	(1.2469E-03)	
												Ra-223	3.13400E-02	(9.8024E-03)	(2.6493E-04)	
		147.7800	9.3500	0.0060	<2.2000E+02	<2.2000E+03		147.7800				Ra-226	1.10134E-01	3.4448E-02	9.3102E-04	
												Ra-228	3.22695E-01	1.0093E-01	2.7279E-03	
												Th-227 [1.4126E-14 kg]	5.18000E-02	1.6202E-02	4.3789E-04	
												Th-228 [2.5563E-12 kg]	2.47964E-01	7.7559E-02	2.0962E-03	
												Th-230 [6.7952E-08 kg]	1.68805E-01	5.2799E-02	1.4270E-03	
												Th-232 [2.4799E-02 kg]	3.22695E-01	1.0093E-01	2.7279E-03	
												U-234 [1.2144E-06 kg]	8.90661E-01	2.7858E-01	7.5292E-03	
												U-Nat [1.9267E-02 kg]	1.61824E+00	5.0616E-01	1.3680E-02	
												Subtotal		1.1838E+00	3.1995E-02	
												Total		1.1838E+00	3.1995E-02	
												Source [4.4068E-02 kg]				
9124/GTEOSI	19 Strong Tight Container Loaded in Gondola	3.7690	7643.0319	0.0001	<3.6740E-06	<3.6740E-05	22,59-CONCRETE,59 -MISC DEBRIS-HJ	3.7690	100	OXIDES/NONE	0.00	Ac-227	4.16500E-02	(1.1733E-02)	(3.1711E-04)	AU
												Pa-231	1.64300E-01	(4.6283E-02)	(1.2509E-03)	
												Ra-223	3.86700E-02	(1.0894E-02)	(2.9442E-04)	
		133.1000	8.4250	0.0100	<2.2000E+02	<2.2000E+03		133.1000				Ra-226	1.55001E-01	4.3664E-02	1.1801E-03	
												Ra-228	5.08794E-01	1.4333E-01	3.8738E-03	
												Th-227 [1.0229E-14 kg]	4.16500E-02	(1.1733E-02)	(3.1711E-04)	
												Th-228 [5.3441E-12 kg]	5.75572E-01	1.6214E-01	4.3822E-03	
												Th-230 [9.6495E-08 kg]	2.66155E-01	7.4977E-02	2.0264E-03	
												Th-232 [3.5216E-02 kg]	5.08794E-01	1.4333E-01	3.8738E-03	
												U-234 [1.3271E-06 kg]	1.08069E+00	3.0443E-01	8.2279E-03	
												U-Nat [1.8951E-02 kg]	1.76727E+00	4.9784E-01	1.3455E-02	
												Subtotal		1.3697E+00	3.7019E-02	
												Total		1.3697E+00	3.7019E-02	

FORM 541A

UNIFORM LOW-LEVEL RADIOACTIVE WASTE MANIFEST

CONTAINER AND WASTE DESCRIPTION (CONTINUATION)

Envirocare of Utah, Inc.

2. MANIFEST NUMBER 0840-01-980

DISPOSAL CONTAINER DESCRIPTION							WASTE DESCRIPTION FOR EACH WASTE TYPE IN CONTAINER									
							PHYSICAL DESCRIPTION			14. CHEMICAL DESCRIPTION		15. RADIOLOGICAL DESCRIPTION				16. WASTE CLASSIFICATION AS-Class A Stable AU-Class A Unstable B-Class B C-Class C
5. CONTAINER IDENTIFICATION NUMBER/ GENERATOR ID NUMBER(S)	6. CONTAINER DESCRIPTION (See Note 1 & Note 1A)	7. VOLUME (m3)/(ft3)	8. WASTE AND CONTAINER WEIGHT (kg)/(ton)	9. SURFACE RADIATION LEVEL (mSv/hr)/(mrem/hr)	10. SURFACE CONTAMINATION (MBq/100 cm2)/(dpm/100cm2) ALPHA	BETA-GAMMA	11. WASTE DESCRIPTOR (See Note 2 & Note 2A)	12. APPROXIMATE WASTE VOLUME(S) IN CONTAINER (m3)/(FT3)	13. SOLIDIFICATION OR STABILIZATION MEDIA (See Note 3)	CHEMICAL FORM/ CHELATING AGENT	WEIGHT % CHELATING AGENT IF > 0.1%	INDIVIDUAL RADIONUCLIDES AND ACTIVITY (MBq) AND CONTAINER TOTAL; OR CONTAINER TOTAL ACTIVITY AND RADIONUCLIDE PERCENT: RADIONUCLIDES	pCi/gm	MBq	mCi	
												Source [5.4168E-02 kg]				
9126/GTEOSI	19 Strong Tight Container Loaded in Gondola	4.9532	10033.4639	0.0001	<3.6740E-06	<3.6740E-05	22,59-CONCRETE,59 -MISC DEBRIS-HJ	4.9532	100	OXIDES/NONE	0.00	Ac-227	4.85500E-02	1.7975E-02	4.8580E-04	AU
												Pa-231	1.20000E-01	(4.4426E-02)	(1.2007E-03)	
												Ra-223	2.68000E-02	(9.9223E-03)	(2.6817E-04)	
		174.9200	11.0600	0.0100	<2.2000E+02	<2.2000E+03		174.9200				Ra-226	1.06286E-01	3.9350E-02	1.0635E-03	
												Ra-228	2.55745E-01	9.4683E-02	2.5590E-03	
												Th-227 [1.5671E-14 kg]	4.85500E-02	1.7975E-02	4.8580E-04	
												Th-228 [4.4935E-12 kg]	3.68243E-01	1.3633E-01	3.6847E-03	
												Th-230 [6.3745E-08 kg]	1.33782E-01	4.9532E-02	1.3387E-03	
												Th-232 [2.3264E-02 kg]	2.55745E-01	9.4683E-02	2.5590E-03	
												U-234 [4.4499E-07 kg]	2.75723E-01	1.0208E-01	2.7589E-03	
												U-Nat [7.1937E-03 kg]	5.10437E-01	1.8898E-01	5.1075E-03	
												Subtotal		7.4159E-01	2.0043E-02	
												Total		7.4159E-01	2.0043E-02	
												Source [3.0458E-02 kg]				
9128/GTEOSI	19 Strong Tight Container Loaded in Gondola	3.0497	6191.5363	0.0001	<3.6740E-06	<3.6740E-05	22,59-CONCRETE,59 -MISC DEBRIS-HJ	3.0497	100	OXIDES/NONE	0.00	Ac-227	8.08500E-02	(1.8430E-02)	(4.9810E-04)	AU
												Pa-231	2.67400E-01	(6.0954E-02)	(1.6474E-03)	
												Ra-223	1.54400E-01	3.5195E-02	9.5122E-04	
		107.7000	6.8250	0.0100	<2.2000E+02	<2.2000E+03		107.7000				Ra-226	2.67241E-01	6.0917E-02	1.6464E-03	
												Ra-228	1.26851E+00	2.8916E-01	7.8150E-03	
												Th-227 [1.6068E-14 kg]	8.08500E-02	(1.8430E-02)	(4.9810E-04)	
												Th-228 [1.0403E-11 kg]	1.38466E+00	3.1563E-01	8.5306E-03	
												Th-230 [1.9467E-07 kg]	6.63570E-01	1.5126E-01	4.0881E-03	
												Th-232 [7.1046E-02 kg]	1.26851E+00	2.8916E-01	7.8150E-03	
												U-234 [1.2733E-05 kg]	1.28138E+01	2.9209E+00	7.8943E-02	
												U-Nat [1.7870E-01 kg]	2.05947E+01	4.6946E+00	1.2688E-01	
												Subtotal		8.7568E+00	2.3667E-01	
												Total		8.7568E+00	2.3667E-01	
												Source [2.4976E-01 kg]				

FORM 541A

UNIFORM LOW-LEVEL RADIOACTIVE WASTE MANIFEST

CONTAINER AND WASTE DESCRIPTION (CONTINUATION)

Envirocare of Utah, Inc.

2. MANIFEST NUMBER 0840-01-980

DISPOSAL CONTAINER DESCRIPTION							WASTE DESCRIPTION FOR EACH WASTE TYPE IN CONTAINER									
							PHYSICAL DESCRIPTION			14. CHEMICAL DESCRIPTION		15. RADIOLOGICAL DESCRIPTION				16. WASTE CLASSIFICATION AS-Class A Stable AU-Class A Unstable B-Class B C-Class C
5. CONTAINER IDENTIFICATION NUMBER/ GENERATOR ID NUMBER(S)	6. CONTAINER DESCRIPTION (See Note 1 & Note 1A)	7. VOLUME (m3) / (ft3)	8. WASTE AND CONTAINER WEIGHT (kg) / (ton)	9. SURFACE RADIATION LEVEL (mSv/hr) / (mrem/hr)	10. SURFACE CONTAMINATION (MBq/100 cm2) / (dpm/100cm2) ALPHA	BETA-GAMMA	11. WASTE DESCRIPTOR (See Note 2 & Note 2A)	12. APPROXIMATE WASTE VOLUME(S) IN CONTAINER (m3) / (FT3)	13. SOLIDIFICATION OR STABILIZATION MEDIA (See Note 3)	CHEMICAL FORM/ CHELATING AGENT	WEIGHT % CHELATING AGENT IF > 0.1%	INDIVIDUAL RADIONUCLIDES AND ACTIVITY (MBq) AND CONTAINER TOTAL; OR CONTAINER TOTAL ACTIVITY AND RADIONUCLIDE PERCENT: RADIONUCLIDES	pCi/gm	MBq	mCi	
9131/GTEOSI	19 Strong Tight Container Loaded in Gondola	4.4387	8994.7373	0.0001	<3.6740E-06	<3.6740E-05	22,59-CONCRETE,59 -MISC DEBRIS-HJ	4.4387	100	OXIDES/NONE	0.00	Ac-227	6.18900E-02	(2.0533E-02)	(5.5494E-04)	AU
		156.7500	9.9150	0.0120	<2.2000E+02	<2.2000E+03		156.7500				Pa-231	2.32400E-01	(7.7101E-02)	(2.0838E-03)	
												Ra-223	4.52900E-02	1.5025E-02	4.0609E-04	
												Ra-226	2.05022E-01	6.8017E-02	1.8383E-03	
												Ra-228	5.08794E-01	1.6880E-01	4.5621E-03	
												Th-227 [1.7901E-14 kg]	6.18900E-02	(2.0533E-02)	(5.5494E-04)	
												Th-228 [6.4103E-12 kg]	5.86227E-01	1.9449E-01	5.2564E-03	
												Th-230 [1.1364E-07 kg]	2.66155E-01	8.8301E-02	2.3865E-03	
												Th-232 [4.1474E-02 kg]	5.08794E-01	1.6880E-01	4.5621E-03	
												U-234 [6.0988E-06 kg]	4.21710E+00	1.3991E+00	3.7813E-02	
												U-Nat [8.6351E-02 kg]	6.83759E+00	2.2684E+00	6.1309E-02	
												Subtotal		4.3709E+00	1.1813E-01	
												Total		4.3709E+00	1.1813E-01	
												Source [1.2783E-01 kg]				
9132/GTEOSI	19 Strong Tight Container Loaded in Gondola	4.3554	8826.9081	0.0001	<3.6740E-06	<3.6740E-05	22,59-CONCRETE,59 -MISC DEBRIS-HJ	4.3554	100	OXIDES/NONE	0.00	Ac-227	5.28600E-02	(1.7208E-02)	(4.6509E-04)	AU
		153.8100	9.7300	0.0120	<2.2000E+02	<2.2000E+03		153.8100				Pa-231	2.67400E-01	(8.7050E-02)	(2.3527E-03)	
												Ra-223	4.38500E-02	(1.4275E-02)	(3.8582E-04)	
												Ra-226	1.68359E-01	5.4808E-02	1.4813E-03	
												Ra-228	4.65248E-01	1.5146E-01	4.0935E-03	
												Th-227 [1.5003E-14 kg]	5.28600E-02	(1.7208E-02)	(4.6509E-04)	
												Th-228 [6.1429E-12 kg]	5.72502E-01	1.8638E-01	5.0372E-03	
												Th-230 [1.0197E-07 kg]	2.43376E-01	7.9232E-02	2.1414E-03	
												Th-232 [3.7214E-02 kg]	4.65248E-01	1.5146E-01	4.0935E-03	
												U-234 [4.1182E-06 kg]	2.90197E+00	9.4472E-01	2.5533E-02	
												U-Nat [5.9518E-02 kg]	4.80283E+00	1.5635E+00	4.2258E-02	
												Subtotal		3.1316E+00	8.4638E-02	
												Total		3.1316E+00	8.4638E-02	
												Source [9.6736E-02 kg]				
9137/GTEOSI	19 Strong Tight Container Loaded in Gondola	5.0611	10251.1882	0.0001	<3.6740E-06	<3.6740E-05	22,59-CONCRETE,59 -MISC DEBRIS-HJ	5.0611	100	OXIDES/NONE	0.00	Ac-227	7.03700E-02	2.6620E-02	7.1947E-04	AU
		178.7300	11.3000	0.0100	<2.2000E+02	<2.2000E+03		178.7300				Pa-231	1.69500E-01	(6.4121E-02)	(1.7330E-03)	
												Ra-223	2.37000E-02	(8.9655E-03)	(2.4231E-04)	
												Ra-226	2.00521E-01	7.5857E-02	2.0502E-03	
												Ra-228	5.91064E-01	2.2359E-01	6.0431E-03	

FORM 541A

UNIFORM LOW-LEVEL RADIOACTIVE WASTE MANIFEST

CONTAINER AND WASTE DESCRIPTION (CONTINUATION)

Envirocare of Utah, Inc.

2. MANIFEST NUMBER 0840-01-980

DISPOSAL CONTAINER DESCRIPTION							WASTE DESCRIPTION FOR EACH WASTE TYPE IN CONTAINER									
							PHYSICAL DESCRIPTION			14. CHEMICAL DESCRIPTION		15. RADIOLOGICAL DESCRIPTION				16. WASTE CLASSIFICATION AS-Class A Stable AU-Class A Unstable B-Class B C-Class C
5. CONTAINER IDENTIFICATION NUMBER/ GENERATOR ID NUMBER(S)	6. CONTAINER DESCRIPTION (See Note 1 & Note 1A)	7. VOLUME (m3)/(ft3)	8. WASTE AND CONTAINER WEIGHT (kg)/(ton)	9. SURFACE RADIATION LEVEL (mSv/hr)/(mrem/hr)	10. SURFACE CONTAMINATION (MBq/100 cm2)/(dpm/100cm2) ALPHA	BETA-GAMMA	11. WASTE DESCRIPTOR (See Note 2 & Note 2A)	12. APPROXIMATE WASTE VOLUME(S) IN CONTAINER (m3)/(FT3)	13. SOLIDIFICATION OR STABILIZATION MEDIA (See Note 3)	CHEMICAL FORM/ CHELATING AGENT	WEIGHT % CHELATING AGENT IF > 0.1%	INDIVIDUAL RADIONUCLIDES AND ACTIVITY (MBq) AND CONTAINER TOTAL; OR CONTAINER TOTAL ACTIVITY AND RADIONUCLIDE PERCENT: RADIONUCLIDES	pCi/gm	MBq	mCi	
												Th-227 [2.3209E-14 kg]	7.03700E-02	2.6620E-02	7.1947E-04	
												Th-228 [7.4579E-12 kg]	5.98147E-01	2.2627E-01	6.1155E-03	
												Th-230 [1.5053E-07 kg]	3.09191E-01	1.1696E-01	3.1612E-03	
												Th-232 [5.4937E-02 kg]	5.91064E-01	2.2359E-01	6.0431E-03	
												U-234 [2.0662E-06 kg]	1.25296E+00	4.7397E-01	1.2810E-02	
												U-Nat [3.0597E-02 kg]	2.12480E+00	8.0379E-01	2.1724E-02	
												Subtotal		2.1973E+00	5.9386E-02	
												Total		2.1973E+00	5.9386E-02	
												Source [8.5537E-02 kg]				
9141/GTEOSI	19 Strong Tight Container Loaded in Gondola	2.6340	5352.3903	0.0001	<3.6740E-06	<3.6740E-05	22,59-CONCRETE,59 -MISC DEBRIS-HJ	2.6340	100	OXIDES/NONE	0.00	Ac-227	5.80000E-02	(1.1419E-02)	(3.0861E-04)	AU
												Pa-231	2.93300E-01	5.7742E-02	1.5606E-03	
												Ra-223	6.13100E-02	(1.2070E-02)	(3.2622E-04)	
		93.0200	5.9000	0.0100	<2.2000E+02	<2.2000E+03		93.0200				Ra-226	1.61172E-01	3.1730E-02	8.5758E-04	
												Ra-228	8.87943E-01	1.7481E-01	4.7246E-03	
												Th-227 [9.9552E-15 kg]	5.80000E-02	(1.1419E-02)	(3.0861E-04)	
												Th-228 [7.2153E-12 kg]	1.11195E+00	2.1891E-01	5.9166E-03	
												Th-230 [1.1769E-07 kg]	4.64492E-01	9.1446E-02	2.4715E-03	
												Th-232 [4.2951E-02 kg]	8.87943E-01	1.7481E-01	4.7246E-03	
												U-234 [1.7132E-06 kg]	1.99622E+00	3.9301E-01	1.0622E-02	
												U-Nat [2.6191E-02 kg]	3.49481E+00	6.8805E-01	1.8596E-02	
												Subtotal		1.8305E+00	4.9473E-02	
												Total		1.8305E+00	4.9473E-02	
												Source [6.9144E-02 kg]				
9220/GTEOSI	19 Strong Tight Container Loaded in Gondola	4.4656	9049.1684	0.0001	<3.6740E-06	<3.6740E-05	22,59-CONCRETE,59 -MISC DEBRIS-HJ	4.4656	100	OXIDES/NONE	0.00	Ac-227	1.13600E-01	3.7918E-02	1.0248E-03	AU
												Pa-231	2.42800E-01	(8.1041E-02)	(2.1903E-03)	
												Ra-223	5.50700E-02	(1.8381E-02)	(4.9679E-04)	
		157.7000	9.9750	0.0050	<2.2000E+02	<2.2000E+03		157.7000				Ra-226	9.07500E-02	3.0290E-02	8.1865E-04	
												Ra-228	2.95603E-01	9.8664E-02	2.6666E-03	
												Th-227 [3.3058E-14 kg]	1.13600E-01	3.7918E-02	1.0248E-03	
												Th-228 [3.2405E-12 kg]	2.94559E-01	9.8316E-02	2.6572E-03	
												Th-230 [6.6426E-08 kg]	1.54633E-01	5.1611E-02	1.3949E-03	
												Th-232 [2.4242E-02 kg]	2.95603E-01	9.8664E-02	2.6666E-03	

FORM 541A

UNIFORM LOW-LEVEL RADIOACTIVE WASTE MANIFEST

CONTAINER AND WASTE DESCRIPTION (CONTINUATION)

Envirocare of Utah, Inc.

2. MANIFEST NUMBER 0840-01-980

DISPOSAL CONTAINER DESCRIPTION							WASTE DESCRIPTION FOR EACH WASTE TYPE IN CONTAINER									
							PHYSICAL DESCRIPTION			14. CHEMICAL DESCRIPTION		15. RADIOLOGICAL DESCRIPTION				16. WASTE CLASSIFICATION AS-Class A Stable AU-Class A Unstable B-Class B C-Class C
5. CONTAINER IDENTIFICATION NUMBER/ GENERATOR ID NUMBER(S)	6. CONTAINER DESCRIPTION (See Note 1 & Note 1A)	7. VOLUME (m3)/(ft3)	8. WASTE AND CONTAINER WEIGHT (kg)/(ton)	9. SURFACE RADIATION LEVEL (mSv/hr)/(mrem/hr)	10. SURFACE CONTAMINATION (MBq/100 cm2)/(dpm/100cm2)		11. WASTE DESCRIPTOR (See Note 2 & Note 2A)	12. APPROXIMATE WASTE VOLUME(S) IN CONTAINER (m3)/(FT3)	13. SOLIDIFICATION OR STABILIZATION MEDIA (See Note 3)	CHEMICAL FORM/ CHELATING AGENT	WEIGHT % CHELATING AGENT IF > 0.1%	INDIVIDUAL RADIONUCLIDES AND ACTIVITY (MBq) AND CONTAINER TOTAL; OR CONTAINER TOTAL ACTIVITY AND RADIONUCLIDE PERCENT				
					ALPHA	BETA-GAMMA						RADIONUCLIDES	pCi/gm	MBq	mCi	
												U-234 [1.0248E-06 kg]	7.04359E-01	2.3510E-01	6.3540E-03	
												U-Nat [1.4332E-02 kg]	1.12800E+00	3.7651E-01	1.0176E-02	
												Subtotal		1.0650E+00	2.8784E-02	
												Total		1.0650E+00	2.8784E-02	
												Source [3.8575E-02 kg]				
Shipment Totals		42.5592	86295.9541									Source [8.9502E-01 kg]		2.7434E+01	7.4147E-01	
		1502.9600	95.1250													

Envirocare of Utah, Inc.

ADDITIONAL NOTES

Manifest Number
0840-01-980
PAGE 1

New York State Waste Transporter Part 364 permit No. 4A-288
New York State Waste Transporter Part 381 permit Number 4A-288

UNIFORM LOW-LEVEL RADIOACTIVE WASTE MANIFEST
ISOTOPES REPORT

For Manifest # 0840-01-980
Envirocare of Utah, Inc.

	Total Activity		
Isotope	(MBq)	(mCi)	(Ci)
Ac-227	1.9802E-01	5.3520E-03	5.3520E-06
Pa-231	6.3390E-01	1.7132E-02	1.7132E-05
Ra-223	1.4707E-01	3.9749E-03	3.9749E-06
Ra-226	5.1355E-01	1.3880E-02	1.3880E-05
Ra-228	1.6633E+00	4.4954E-02	4.4954E-05
Th-227	1.9802E-01	5.3520E-03	5.3520E-06
Th-228	1.8744E+00	5.0659E-02	5.0659E-05
Th-230	8.7010E-01	2.3516E-02	2.3516E-05
Th-232	1.6633E+00	4.4954E-02	4.4954E-05
U-234	7.7287E+00	2.0888E-01	2.0888E-04
U-Nat	1.2775E+01	3.4528E-01	3.4528E-04

FORM 540 — Envirocare of Utah, Inc.

UNIFORM LOW-LEVEL RADIOACTIVE WASTE MANIFEST

SHIPPING PAPER

1. EMERGENCY TELEPHONE NUMBER (Include Area Code): 1-800-424-9300

ORGANIZATION: Chemtrec

2. IS THIS AN "EXCLUSIVE USE" SHIPMENT? ☐ YES ☑ NO

3. TOTAL NUMBER OF PACKAGES IDENTIFIED ON THIS MANIFEST ====> 11

4. DOES EPA REGULATED WASTE REQUIRING A MANIFEST ACCOMPANY THIS SHIPMENT? ☐ YES ☑ NO
If "Yes," provide Manifest Number ====>

EPA MANIFEST NUMBER

5. SHIPPER -- NAME AND FACILITY
GTEOSI
140 Cantiague Rock RD
Hicksville, NY 11801

Utah Generator Site Access Permit No.: 020 500 1352
SHIPMENT NUMBER: MHFX-5242

CONTACT: Jean Agostinelli

6. CARRIER -- Name and Address
Priority Transport Services, Inc.
391 Anthony Street
Schenectady, NY 12308

CONTACT: Dispatch

SIGNATURE -- Authorized carrier acknowledging waste receipt

SHIPPER I.D. NUMBER: 0840-01-980
☐ COLLECTOR
☐ PROCESSOR
☑ GENERATOR TYPE (Specify) I

TELEPHONE NUMBER (Include Area Code): 516-932-8157

EPA I.D. NUMBER: NYR000104976

SHIPPING DATE: 05/11/2005

TELEPHONE (Include Area Code): 800-235-0069

DATE: 5-11-05

7. FORM 540 AND 540A — PAGE 1 OF 3 PAGE(S)
FORM 541 AND 541A — 6 PAGE(S)
FORM 542 AND 542A — None PAGE(S)
ADDITIONAL INFORMATION — None PAGE(S)

8. MANIFEST NUMBER (Use this number on all continuation pages): 0840-01-980

9. CONSIGNEE - Name and Facility
Envirocare of Utah, Inc.
Clive Disposal Site (Bulk Waste Facility)
Interstate 80, Exit 49
Clive, UT 84029

L84523

CONTACT: Shipping and Receiving
TELEPHONE (Include Area Code): (435)884-0155

SIGNATURE -- Authorized consignee acknowledging waste receipt

DATE: 5-25-05

10. CERTIFICATION

This is to certify that the herein-named materials are properly classified, described, packaged, marked, and labeled and are in proper condition for transportation according to the applicable regulations of the Department of Transportation. This also certifies that the materials are classified, packaged, marked, and labeled and are in proper condition for transportation and disposal as described in accordance with the requirements of 10 CFR Parts 20 and 61, or equivalent state regulations.

AUTHORIZED SIGNATURE | TITLE: Broker | DATE: 5-11-05

*b3M

11. U.S. DEPARTMENT OF TRANSPORTATION DESCRIPTION (Including proper shipping name, hazard class, UN ID number, and any additional information)	12. DOT LABEL "RADIOACTIVE"	13. INDEX	14. PHYSICAL AND CHEMICAL FORM	15. INDIVIDUAL RADIONUCLIDES	16. TOTAL PACKAGE ACTIVITY MBq	mCi	17. LSA/SCO CLASS	18. TOTAL WEIGHT OR VOLUME (Use appropriate units)	19. IDENTIFICATION NUMBER OF PACKAGE
Soil,DOT Non-Regulated, containing Radionuclides	NA	NA	Solid / OXIDES	Ac-227 Pa-231 Ra-223 Ra-226 Ra-228 Th-227 Th-228 Th-230 Th-232 U-234 U-Nat	1.9363E+00	5.2332E-02	NA	14460 LBS; 114.13 FT3	9120
Soil,DOT Non-Regulated, containing Radionuclides	NA	NA	Solid / OXIDES	Ac-227 Pa-231 Ra-223 Ra-226 Ra-228 Th-227 Th-228 Th-230 Th-232 U-234 U-Nat	9.3236E-01	2.5199E-02	NA	10830 LBS; 85.32 FT3	9121
Soil,DOT Non-Regulated, containing Radionuclides	NA	NA	Solid / OXIDES	Ac-227 Pa-231 Ra-223 Ra-226 Ra-228 Th-227 Th-228 Th-230 Th-232 U-234 U-Nat	1.2397E+00	3.3506E-02	NA	18700 LBS; 147.78 FT3	9123

FOR CONSIGNEE USE ONLY

- ___ Record Waste Description Inadequate
- ___ Contamination or Leakage Detected
- ___ Unexpected Exposure Rates Detected
- ___ Labels, Markings, etc. Inadequate
- ___ Container Integrity Inadequate
- ___ Other
- ✓ No Violations Detected on this Shipment

20. TERMS AND CONDITIONS

A. HAZARDOUS MATERIALS: Generator represents & warrants that Waste Material ___ is (or) ✓ is not a hazardous waste as defined in 40 CFR 261. Where the material is a hazardous waste, this shipment is also accompanied by a separate and completed hazardous waste manifest, along with the appropriate land-disposal restriction notice and/or certification as required by 40 CFR 268.1.

B. TITLE: Upon acceptance at the disposal site by Envirocare of Utah, Inc., and all appropriate regulatory authorities, title to the Waste Material which conforms to Generator's representations herein shall thereupon transfer from Generator and be vested in Envirocare of Utah, Inc.

C. WASTE MATERIAL: Generator represents and warrants that all data set forth in this (UNIFORM LOW-LEVEL RADIOACTIVE WASTE MANIFEST) are true and correct in all respects and in accordance with all applicable governmental laws, rules, regulations and Envirocare of Utah Inc.'s facility license.

D. INDEMNIFICATION: Generator agrees to indemnify Envirocare of Utah, Inc., its officers, employees and agents against all losses and liability whatsoever if such losses or liability results from the failure of the Waste Material to conform in all material respects to the data supplied on the (UNIFORM LOW-LEVEL RADIOACTIVE WASTE MANIFEST,) or if this shipment fails to meet the standards prescribed by the Department of Transportation or any governmental agency having jurisdiction over such matters.

FORM 540 (04-03)

FORM 540A

Envirocare of Utah, Inc.

UNIFORM LOW-LEVEL RADIOACTIVE WASTE MANIFEST

SHIPPING PAPER (CONTINUATION)

8. MANIFEST NUMBER (Use this number on all continuation pages) 0840-01-980

11. U.S. DEPARTMENT OF TRANSPORTATION DESCRIPTION (Including proper shipping name, hazard class, UN ID number, and any additional information)	12. DOT LABEL "RADIOACTIVE"	13. TRANSPORT INDEX	14. PHYSICAL AND CHEMICAL FORM	15. INDIVIDUAL RADIONUCLIDES				16. TOTAL PACKAGE ACTIVITY MBq	mCi	17. LSA/SCO CLASS	18. TOTAL WEIGHT OR VOLUME (Use appropriate units)	19. IDENTIFICATION NUMBER OF PACKAGE
Soil,DOT Non-Regulated, containing Radionuclides	NA	NA	Solid / OXIDES	Ac-227	Pa-231	Ra-223	Ra-226	1.4504E+00	3.9199E-02	NA	16850 LBS; 133.1 FT3	9124
				Ra-228	Th-227	Th-228	Th-230					
				Th-232	U-234	U-Nat						
Soil,DOT Non-Regulated, containing Radionuclides	NA	NA	Solid / OXIDES	Ac-227	Pa-231	Ra-223	Ra-226	7.9594E-01	2.1512E-02	NA	22120 LBS; 174.92 FT3	9126
				Ra-228	Th-227	Th-228	Th-230					
				Th-232	U-234	U-Nat						
Soil,DOT Non-Regulated, containing Radionuclides	NA	NA	Solid / OXIDES	Ac-227	Pa-231	Ra-223	Ra-226	8.8545E+00	2.3931E-01	NA	13650 LBS; 107.7 FT3	9128
				Ra-228	Th-227	Th-228	Th-230					
				Th-232	U-234	U-Nat						
Soil,DOT Non-Regulated, containing Radionuclides	NA	NA	Solid / OXIDES	Ac-227	Pa-231	Ra-223	Ra-226	4.4891E+00	1.2133E-01	NA	19830 LBS; 156.75 FT3	9131
				Ra-228	Th-227	Th-228	Th-230					
				Th-232	U-234	U-Nat						
Soil,DOT Non-Regulated, containing Radionuclides	NA	NA	Solid / OXIDES	Ac-227	Pa-231	Ra-223	Ra-226	3.2673E+00	8.8306E-02	NA	19460 LBS; 153.81 FT3	9132
				Ra-228	Th-227	Th-228	Th-230					
				Th-232	U-234	U-Nat						
Soil,DOT Non-Regulated, containing Radionuclides	NA	NA	Solid / OXIDES	Ac-227	Pa-231	Ra-223	Ra-226	2.2704E+00	6.1362E-02	NA	22600 LBS; 178.73 FT3	9137
				Ra-228	Th-227	Th-228	Th-230					
				Th-232	U-234	U-Nat						
Soil,DOT Non-Regulated, containing Radionuclides	NA	NA	Solid / OXIDES	Ac-227	Pa-231	Ra-223	Ra-226	1.8654E+00	5.0416E-02	NA	11800 LBS; 93.02 FT3	9141
				Ra-228	Th-227	Th-228	Th-230					

FORM 540A

Envirocare of Utah, Inc.

UNIFORM LOW-LEVEL RADIOACTIVE WASTE MANIFEST

SHIPPING PAPER (CONTINUATION)

8. MANIFEST NUMBER (Use this number on all continuation pages) 0840-01-960

11. U.S. DEPARTMENT OF TRANSPORTATION DESCRIPTION (Including proper shipping name, hazard class, UN ID number, and any additional information)	12. DOT LABEL "RADIOACTIVE"	13. TRANSPORT INDEX	14. PHYSICAL AND CHEMICAL FORM	15. INDIVIDUAL RADIONUCLIDES				16. TOTAL PACKAGE ACTIVITY MBq	mCi	17. LSA/SCO CLASS	18. TOTAL WEIGHT OR VOLUME (Use appropriate units)	19. IDENTIFICATION NUMBER OF PACKAGE
Soil,DOT Non-Regulated, containing Radionuclides	NA	NA	Solid / OXIDES	Th-232	U-234	U-Nat		1.8654E+00	5.0416E-02	NA	11800 LBS; 93.02 FT3	9141
Soil,DOT Non-Regulated, containing Radionuclides	NA	NA	Solid / OXIDES	Ac-227	Pa-231	Ra-223	Ra-226	1.1644E+00	3.1470E-02	NA	19950 LBS; 157.7 FT3	9220
				Ra-228	Th-227	Th-228	Th-230					
				Th-232	U-234	U-Nat						

FORM 540A (04-03)

Shipment Survey

Survey Number: GTEOSI-05-00324 Date: 4-18-05 Time: 16:30

Waste Container Type: Super Sack Intermodal Other: Soil

Waste Container ID #: 9220 Storage Bin: — Gross Weight: 19,950 lbs

	Ludlum 3030		Ludlum 3030		Ludlum 3030		L-19
Serial #	190646		196165		N		193615
Probe #	N/A		N/A				N/A
Calibration Due Date:	12-13-05		7-18-05				29 Mar 06
	α	β	α	β	α	β	
Background	0 cpm	25 cpm	0 cpm	25 cpm	cpm	cpm	5 μR/hr
Efficiency	29 %	25 %	29 %	25 %	%	%	
MDA	25 dpm	130 dpm	25 dpm	130 dpm	dpm	A dpm	

Maximum Contact Dose Rate: 0.005 mrem/hr Transport Index: 0.0 mrem/hr

	α cpm	α dpm/100 cm2	β cpm	β dpm/100 cm2
ALARA Limit	N/A	60	N/A	500
Smear #				
1	0	LMDA	27	LMDA
2	0		30	
3	0		21	
4	1		32	
5	0		28	
6	0	LMDA	26	LMDA

Smear Locations: 1 - Bottom 2 - Front 3 - Right Side 4 - Back 5 - Left Side 6 - Top

George Economos
Surveyor Name

George Economos
Surveyor Signature

Supervisor Approval

25932-S-GC18A9220-99.9
Date: 02/09/05 Time:1308

4-18-05 16:25 Bag# 9220
19950 lb GR
041805 1625 9220 0019950

Shipment Survey

Survey Number: GTEOSI047551 Date: 9-13-04 Time: 0815

Waste Container Type: Super Sack Intermodal Other: N/A

Waste Container ID #: 9120 Storage Bin: 54 Gross Weight: 14,460 lbs

	Ludlum 3030		Ludlum 3030		Ludlum 3030		MoD 19
Serial #	190641		191265				193595
Probe #	N/A		N/A		N/A		N/A
Calibration Due Date:	3-4-05		4-20-05				5-8-05
	α	β	α	β	α	β	
Background	0 cpm	25 cpm	0 cpm	25 cpm	cpm	cpm	5 μR/hr
Efficiency	~~10 25%~~	~~10 25%~~	~~10 25%~~	~~10 25%~~	N/A	%	
MDA	25 dpm	130 dpm	25 dpm	130 dpm	dpm	dpm	

Maximum Contact Dose Rate: 0.01 mrem/hr Transport Index: 0.0 mrem/hr

	α cpm	α dpm/100 cm2	β cpm	β dpm/100 cm2
ALARA Limit	N/A	60	N/A	500
Smear #				
1	0	LMDA	27	LMDA
2	0		26	
3	0		28	
4	0		25	
5	0		25	
6	0	LMDA	32	LMDA

Smear Locations: 1 - Bottom 2 - Front 3 - Right Side 4 - Back 5 - Left Side 6 - Top

C DeCirolis
Surveyor Name

Surveyor Signature

George Economou
Supervisor Approval

17267-S-SHEET9120-99.9
Date: 09/03/04 Time:1103

9-13-04 8:00 Bag# 9120
14460 lb GR
091304 0800 9120 0014460

Shipment Survey

Survey Number: GTE051-04-7558 Date: 10-1-04 Time: 1252

Waste Container Type: Super Sack Intermodal Other: N/A

Waste Container ID #: 9121 Storage Bin: 35 Gross Weight: 10830 lbs

	Ludlum 3030		Ludlum 3030		Ludlum 3030		LMI 125
Serial #	190641		191265				174124
Probe #	N/A		N/A		N/A		N/A
Calibration Due Date:	3-4-05		4-20-05				3-8-05
	α	β	α	β	α	β	
Background	0 cpm	25 cpm	0 cpm	25 cpm	cpm	cpm	6 μR/hr
Efficiency	29 %	25 %	29 %	25 %	N/A %	N/A %	
MDA	25 dpm	130 dpm	25 dpm	130 dpm	dpm	dpm	

Maximum Contact Dose Rate: 0.010 mrem/hr Transport Index: 0 mrem/hr

	α cpm	α dpm/100 cm2	β cpm	β dpm/100 cm2
ALARA Limit	N/A	60	N/A	500
Smear #				
1	0	<MDA	29	<MDA
2	0		30	
3	0		36	
4	0		22	
5	0		27	
6	0		27	

Smear Locations: 1 - Bottom 2 - Front 3 - Right Side 4 - Back 5 - Left Side 6 - Top

Scott Eckert
Surveyor Name

Surveyor Signature

George Economos
Supervisor Approval

17610-S-SHEET9121-99.9
Date: 09/20/04 Time:1008

10-01-04 12:52 Bag# 9121
10830 lb GR
100104 1252 9121 0010830

NYSDEC:V00089-1; URS27010-039

Shipment Survey

Survey Number: GTEOSI-04-7553 Date: 9-17-04 Time: 0932

Waste Container Type: Super Sack Intermodal Other: _____

Waste Container ID #: 9123 Storage Bin: 53 Gross Weight: 18700 lbs

	Ludlum 3030		Ludlum 3030		Ludlum 3030		Ludlum 19
Serial #	190641		191265				193615
Probe #	N/A		N/A		N/A		N/A
Calibration Due Date:	3-4-05		4-20-05				5-19-05
	α	β	α	β	α	β	
Background	0 cpm	25 cpm	0 cpm	25 cpm	cpm	cpm	6 μR/hr
Efficiency	29 %	25 %	29 %	25 %	N/A %	N/A %	
MDA	25 dpm	130 dpm	25 dpm	130 dpm	dpm	dpm	

Maximum Contact Dose Rate: ~~0.06~~ 0.006 (DE) mrem/hr Transport Index: 0 mrem/hr

	α cpm	α dpm/100 cm2	β cpm	β dpm/100 cm2
ALARA Limit	N/A	60	N/A	500
Smear #				
1	0	<MDA	32	<MDA
2	0		29	
3	0		19	
4	0		27	
5	0		27	
6	0		36	

Smear Locations: 1 - Bottom 2 - Front 3 - Right Side 4 - Back 5 - Left Side 6 - Top

SCOTT ECKERT
Surveyor Name

Surveyor Signature

George Economos
Supervisor Approval

17382-S-09F199123-99.9
Date: 09/10/04 Time:0927

9-17-04 9:32 Bag# 9123
18700 lb GR
091704 0932 9123 0018700

Shipment Survey

Survey Number: GTEDSI047552 Date: 9-13-04 Time: 0820

Waste Container Type: Super Sack Intermodal Other: N/A

Waste Container ID #: 9124 Storage Bin: 54 Gross Weight: 16,850 lbs

	Ludlum 3030		Ludlum 3030		Ludlum 3030		MoD 19
Serial #	190641		191265				193595
Probe #	N/A		N/A		N/A		N/A
Calibration Due Date:	3-4-05		4-20-05				5-8-05
	α	β	α	β	α	β	
Background	0 cpm	25 cpm	0 cpm	25 cpm	cpm	cpm	5 μR/hr
Efficiency	~~27%~~ %	~~25%~~ %	~~29%~~ %	~~25%~~ %	N/A %	%	
MDA	25 dpm	130 dpm	25 dpm	130 dpm	dpm	dpm	

Maximum Contact Dose Rate: 0.01 mrem/hr Transport Index: 0.0 mrem/hr

	α cpm	α dpm/100 cm2	β cpm	β dpm/100 cm2
ALARA Limit	N/A	60	N/A	500
Smear #				
1	0	LMDA	0	LMDA
2	0		33	
3	1		33	
4	2		28	
5	0		27	
6	0	LMDA	34	LMDA

Smear Locations: 1 - Bottom 2 - Front 3 - Right Side 4 - Back 5 - Left Side 6 - Top

C DeCardis
Surveyor Name

Surveyor Signature

George Lomonds
Supervisor Approval

17247-S-K1XXX9124-99.9
Date: 08/25/04 Time:1421

9-13-04 8:18 Bag# 9124
16850 lb GR
091304 0818 9124 0016850

NYSDEC:V00089-1; URS27010-039

Shipment Survey

Survey Number: 6TEOS1-04 7567 Date: 10-5-04 Time: ~~9126~~ SGE 10-5-04 1515

Waste Container Type: (Super Sack) Intermodal Other: N/A

Waste Container ID #: 9126 Storage Bin: 36 Gross Weight: 22120 lbs

	Ludlum 3030		Ludlum 3030		Ludlum 3030		Ludlum 19
Serial #	190641		191265				193415
Probe #	N/A		N/A		N/A		N/A
Calibration Due Date:	3-4-05		4-20-05				5-19-05
	α	β	α	β	α	β	
Background	0 cpm	25 cpm	0 cpm	25 cpm	cpm	cpm	6 μR/hr
Efficiency	29 %	25 %	29 %	25 %	N/A %	N/A %	
MDA	25 dpm	130 dpm	25 dpm	130 dpm	dpm	dpm	

Maximum Contact Dose Rate: 0.010 mrem/hr Transport Index: 0 mrem/hr

	α cpm	α dpm/100 cm2	β cpm	β dpm/100 cm2
ALARA Limit	N/A	60	N/A	500
Smear #				
1	1	<MDA	31	<MDA
2	0		30	
3	0		32	
4	0		17	
5	0		27	
6	0		28	

Smear Locations: 1 - Bottom 2 - Front 3 - Right Side 4 - Back 5 - Left Side 6 - Top

S. Eckert
Surveyor Name

Surveyor Signature

George Economos
Supervisor Approval

18090-S-LPH159126-99.9
Date: 10/04/04 Time:1111

10-05-04 15:15 Bag# 9126
22120 lb GR
100504 1515 9126 0022120

Shipment Survey

Survey Number: 6TE051-04 7560 Date: 10-1-04 Time: 1313

Waste Container Type: Super Sack Intermodal Other: N/A

Waste Container ID #: 9128 Storage Bin: 35 Gross Weight: 13650 lbs

	Ludlum 3030		Ludlum 3030		Ludlum 3030		LMI 125
Serial #	190641		191265				176124
Probe #	N/A		N/A		N/A		N/A
Calibration Due Date:	3-4-05		4-20-05				3-8-05
	α	β	α	β	α	β	
Background	0 cpm	25 cpm	0 cpm	25 cpm	cpm	cpm	6 μR/hr
Efficiency	29 %	25 %	29 %	25 %	N/A %	N/A %	
MDA	25 dpm	130 dpm	25 dpm	130 dpm	dpm	dpm	

Maximum Contact Dose Rate: 0.010 mrem/hr Transport Index: 0 mrem/hr

	α cpm	α dpm/100 cm2	β cpm	β dpm/100 cm2
ALARA Limit	N/A	60	N/A	500
Smear #				
1	0	<MDA	23	<MDA
2	0		37	
3	0		27	
4	0		25	
5	1		38	
6	0		35	

Smear Locations: 1 - Bottom 2 - Front 3 - Right Side 4 - Back 5 - Left Side 6 - Top

Scott Eckert
Surveyor Name

Surveyor Signature

Supervisor Approval

17775-S-110209128-99.9
Date: 09/23/04 Time:1544

10-01-04 13:13 Bag# 9128
13650 lb GR
100104 1313 9128 0013650

Shipment Survey

Survey Number: GTEOSI-04-7559 Date: 10-1-04 Time: 1300

Waste Container Type: Super Sack Intermodal Other: N/A

Waste Container ID #: 9131 Storage Bin: 35 Gross Weight: 19830 lbs

	Ludlum 3030		Ludlum 3030		Ludlum 3030		Ludlum 19
Serial #	190641		191265				176124
Probe #	N/A		N/A		N/A		N/A
Calibration Due Date:	3-4-05		4-20-05				3-8-05
	α	β	α	β	α	β	
Background	0 cpm	25 cpm	0 cpm	25 cpm	cpm	cpm	6 μR/hr
Efficiency	29 %	25 %	29 %	25 %	N/A %	N/A %	
MDA	25 dpm	130 dpm	25 dpm	130 dpm	dpm	dpm	

Maximum Contact Dose Rate: 0.012 mrem/hr Transport Index: 0 mrem/hr

	α cpm	α dpm/100 cm2	β cpm	β dpm/100 cm2
ALARA Limit	N/A	60	N/A	500
Smear #				
1	0	<MDA	36	<MDA
2	0		27	
3	0		37	
4	0		29	
5	0		23	
6	0		37	

Smear Locations: 1 - Bottom 2 - Front 3 - Right Side 4 - Back 5 - Left Side 6 - Top

S. Eckert
Surveyor Name

Surveyor Signature

George Economos
Supervisor Approval

17853-S-LPH149131-99.9
Date: 09/27/04 Time:1253

10-05-04 15:05 Bag# 9131
19830 lb GR
100504 1505 9131 0019830

NYSDEC:V00089-1; URS27010-039

Shipment Survey

Survey Number: GTEOS1-04 7561 Date: 10-1-04 Time: 1322

Waste Container Type: Super Sack Intermodal Other: _____

Waste Container ID #: 9132 Storage Bin: 35 Gross Weight: 19460 lbs

	Ludlum 3030		Ludlum 3030		Ludlum 3030		LMI 125
Serial #	190641		191265				176124
Probe #	N/A		N/A		N/A		N/A
Calibration Due Date:	3-4-05		4-20-05				3-8-05
	α	β	α	β	α	β	
Background	0 cpm	25 cpm	0 cpm	25 cpm	cpm	cpm	6 μR/hr
Efficiency	29 %	25 %	29 %	25 %	N/A %	N/A %	
MDA	25 dpm	130 dpm	25 dpm	130 dpm	dpm	dpm	

Maximum Contact Dose Rate: 0.012 mrem/hr Transport Index: 0 mrem/hr

	α cpm	α dpm/100 cm2	β cpm	β dpm/100 cm2
ALARA Limit	N/A	60	N/A	500
Smear #				
1	0	<MDA	27	<MDA
2	0		20	
3	0		25	
4	0		26	
5	0		28	
6	0		28	

Smear Locations: 1 - Bottom 2 - Front 3 - Right Side 4 - Back 5 - Left Side 6 - Top

Scott Eckert
Surveyor Name

Surveyor Signature

George Economy
Supervisor Approval

17876-S-LPH149132-04.0
Date: 09/29/04 Time:1141

10-01-04 13:22 Bag# 9132
19460 lb GR
100104 1322 9132 0019460

Shipment Survey

Survey Number: GTEOSL-04-7566 Date: 10-5-04 Time: 1503

Waste Container Type: Super Sack Intermodal Other: N/A

Waste Container ID #: 9137 Storage Bin: 36 Gross Weight: 22600 lbs

	Ludlum 3030		Ludlum 3030		Ludlum 3030		Ludlum 19
Serial #	190441		191265				193615
Probe #	N/A		N/A		N/A		N/A
Calibration Due Date:	3-4-05		4-20-05				5-19-05
	α	β	α	β	α	β	
Background	0 cpm	25 cpm	0 cpm	25 cpm	cpm	cpm	6 μR/hr
Efficiency	29 %	25 %	29 %	25 %	N/A %	N/A %	
MDA	25 dpm	130 dpm	25 dpm	130 dpm	dpm	dpm	

Maximum Contact Dose Rate: 0.010 mrem/hr Transport Index: 0 mrem/hr

	α cpm	α dpm/100 cm2	β cpm	β dpm/100 cm2
ALARA Limit	N/A	60	N/A	500
Smear #				
1	0	<MDA	29	<MDA
2	0		34	
3	0		22	
4	0		37	
5	0		34	
6	0		20	

Smear Locations: 1 - Bottom 2 - Front 3 - Right Side 4 - Back 5 - Left Side 6 - Top

S. ECKERT
Surveyor Name

Surveyor Signature

Supervisor Approval

18127-S-LPH159137-04.0
Date: 10/04/04 Time:1510

10-05-04 15:03 Bag# 9137
22600 lb GR
100504 1503 9137 0022600

NYSDEC:V00089-1; URS27010-039

Shipment Survey

Su[illegible] Number: GTEDSI-04- 7569 Date: 10-5-04 Time: 1537

Waste Container Type: (Super Sack) Intermodal Other: N/A

Waste Container ID #: 9141 Storage Bin: 37 Gross Weight: 11800 lbs

	Ludlum 3030		Ludlum 3030		Ludlum 3030		Ludlum 19
Serial #	190641		191265				193615
Probe #	N/A		N/A		N/A		N/A
Calibration Due Date:	3-4-05		4-20-05				5-19-05
	α	β	α	β	α	β	
Background	0 cpm	25 cpm	0 cpm	25 cpm	cpm	cpm	6 μR/hr
Efficiency	29 %	25 %	29 %	25 %	N/A %	N/A %	
MDA	25 dpm	130 dpm	25 dpm	130 dpm	dpm	dpm	

Maximum Contact Dose Rate: 0.010 mrem/hr Transport Index: 0 mrem/hr

	α cpm	α dpm/100 cm2	β cpm	β dpm/100 cm2
ALARA Limit	N/A	60	N/A	600
Smear #				
1	0	<MDA	22	<MDA
2	0		30	
3	0		35	
4	0		36	
5	0		30	
6	1		29	

Smear Locations: 1 - Bottom 2 - Front 3 - Right Side 4 - Back 5 - Left Side 6 - Top

S. ECKERT
Surveyor Name

Surveyor Signature

George Economos
Supervisor Approval

18167-S-LPH139141-00.5
Date: 10/05/04 Time:1034

10-05-04 15:37 Bag# 9141
11800 lb GR
100504 1537 9141 0011800

NYSDEC:V00089-1; URS27010-039

ENVIROCARE *OF UTAH, LLC.*

THE SAFE ALTERNATIVE

CERTIFICATE OF DISPOSAL

GTE Operations Support Inc., Irving

This Certificate acknowledges that the following manifested shipments:

Shipment	Disposal Location	Date	Shipment	Disposal Location	Date
0840-01-0978	Class A	06/08/05 10:48:04	0840-01-0979	Class A	06/08/05 10:48:04
0840-01-0980	Class A	06/08/05 10:48:04			

Representing 4,589.40 cubic feet of waste has been disposed of at the above listed Disposal Facility. Disposal is subject to Envirocare's Radioactive Material License, all other applicable licenses, permits and regulations, and the Disposal Agreement.

Brent Anderson
Director of LLRW Operations

6/9/05
Date

605 N. 5600 W, Salt Lake City, Utah 84116 Telephone (801) 532-1330

Attachment 5.15
RAILCAR INSPECTION FORM

Shipment Number	Carrier	Railcar Number
0840-01-980	New York + Atlantic / LIRR	MHFX 5242

Item	SAT	UNSAT	Criteria	Comments
Coupler	☑	☐	Hardware intact, no cracks or broken welds, latching mechanism works properly, no loose or damaged parts	
Suspension	☑	☐	Hardware intact, no visible cracks or broken welds, coil springs seated and intact, inner and outer bearings intact and seated properly	
Wheel & Axle Assembly	☑	☐	Overall condition, no cracks or damaged areas on wheel surfaces, hubs centered, bolting intact, rims not bent or cracked	
Frame & Undercarriage	☑	☐	Main beams straight and centered, no major bends or damage, welds intact, no cracks	
Floors & Walls (Gondola, Boxcar)	☑	☐	No damage with open holes, punch throughs, ect. No rust damage, seams and welds intact, no rotting or other material problems, structurally sound	
Attachment Points or Tie Downs	☑	☐	Tie down hardware straight and intact, no cracks on or around attachment hardware, mechanical clips or latches operable and complete	
Doors (Boxcar Only)	☑	☐	Can be closed and secured properly, lubricated properly, rollers and tracks in operable condition, no loose or missing hardware, sealing surfaces intact and seals in serviceable condition	
Seals and Gasket	☑	☐	Seal Flanges intact with no dents or bends that affect sealing capability, gaskets pliable and in serviceable condition, no torn or missing areas, gasket appropriate to meet sealing requirements	
Seams (Gondola, Boxcar)	☑	☐	Seams intact, welds visibly sufficient, all corners and mating interfaces caulked and sealed properly	
Drains	☑	☐	Drains plugged or sealed properly, verify threaded plugs are tack welded or otherwise disabled, all other holes closed and sealed	
Brakes	☑	☐	Visibly inspect brake shoes, minimum 1" contact surface on all shoes, hoses and piping (tubing) mechanically sound, no missing or loose hardware, valves operate freely, no kinks or obstructions in piping or hoses	
Paint and Lettering	☑	☐	Overall good condition of exterior surfaces, identification numbering legible and intact, areas for placards or labels intact and structurally sound (Wood or metal panels)	
Bracing	☑	☐	Bracing and shoring must be sufficient to prevent shifting of lading during conditions normally incident to transportation	

MHF-LS Qualified Technician Signature _____

Shipment Date 5.11.95

Attachment 5.10
TRANSPORT VEHICLE RELEASE CHECKLIST

Shipment Number- 0840-01-980

Truck Number- 38 - R404

Trailer Number- 225 - 226

A qualified MHF-LS shipping technician shall verify that each item listed is satisfactory and then place a Check Mark in the corresponding box.

1. Driver possesses a valid driver's license with a HAZMAT endorsement ☑
2. Driver possesses a valid copy of a "Research and Special Programs Administration" U.S. DOT Hazmat Registration Certificate ☑
3. If manifested on a Hazardous Waste Manifest, ensure the carrier possesses a current EPA ID # ☐
4. Lamps are operable ☑
   - Headlights and Brights
   - Warning Lights and Flashers
   - Brake Lights
5. Coupling devices are intact ☑
6. Tires are sufficient ☑
   - No fabric is exposed through tread or sidewall
   - Front wheel tires must have tread pattern to a depth of ≥1/8 inch
   - Other tires must have tread pattern to a depth of ≥1/16 inch
   - Re-treaded tires are not authorized
7. Horn is operable ☑
8. Windshield wipers are operable ☑
9. Rear-vision mirrors are adequate (1 on each side) ☑
10. Emergency equipment is on-hand and accessible ☑
    - Fire extinguisher
    - Warning devices- bi-directional emergency reflectors, triangles (3), or liquid burning flares
11. General vehicle integrity is satisfactory ☑
    - Frame appears undamaged
    - Flooring is sufficient to support load
    - If a closed transport vehicle, vehicle is closed
    - Vehicle is otherwise in unimpaired physical condition
12. Vehicle truck and trailer have current DOT inspection stickers on both components (Good for 1 year from date performed) ☑
13. Vehicle is properly placarded (Exclusive Use LSA, Yellow III and HRCQ only) ☑
14. Shoring, strapping, blocking and bracing is adequate to prevent shifting of lading ☑

MHF-LS Qualified Technician Signature [signature]
Shipment Date 5-11-95

Attachment 5.9
LOADING DIAGRAM

A qualified MHF-LS shipper shall complete the following diagram by writing the package number and corresponding weight at the approximate position in which it is placed. The space to the left of the diagram may be used for additional or explanatory information as necessary.

Shipment Number- 0840-01-980

Front

9141
11,800-lbs

9123
18,700-lbs

Rear

MHF-LS Qualified Technician
Signature _____
Shipment Date 5-11-05

Attachment 5.9
LOADING DIAGRAM

A qualified MHF-LS shipper shall complete the following diagram by writing the package number and corresponding weight at the approximate position in which it is placed. The space to the left of the diagram may be used for additional or explanatory information as necessary.

Shipment Number- 0840-01-980

Front

9132
19,460-lbs

9220
19,950-lbs

Rear

MHF-LS Qualified Technician
Signature _____
Shipment Date 5-11-05

Attachment 5.9
LOADING DIAGRAM

A qualified MHF-LS shipper shall complete the following diagram by writing the package number and corresponding weight at the approximate position in which it is placed. The space to the left of the diagram may be used for additional or explanatory information as necessary.

Shipment Number- 9840-01-980

Front

9126
22120-lbs

9128
13650-lbs

Rear

MHF-LS Qualified Technician
Signature _____
Shipment Date 5-11-05

Attachment 5.9
LOADING DIAGRAM

A qualified MHF-LS shipper shall complete the following diagram by writing the package number and corresponding weight at the approximate position in which it is placed. The space to the left of the diagram may be used for additional or explanatory information as necessary.

Shipment Number- 0840-01-980

Front

9137
22600-lbs

9124
16,850-lbs

Rear

MHF-LS Qualified Technician
Signature _____
Shipment Date 5.11.05

Attachment 5.9
LOADING DIAGRAM

A qualified MHF-LS shipper shall complete the following diagram by writing the package number and corresponding weight at the approximate position in which it is placed. The space to the left of the diagram may be used for additional or explanatory information as necessary.

Shipment Number- 0840.91.980

Front

9120
14460-lbs

9121
10,830-lbs

Rear

MHF-LS Qualified Technician
Signature [signature]
Shipment Date 5.11.05

Attachment 5.9
LOADING DIAGRAM

A qualified MHF-LS shipper shall complete the following diagram by writing the package number and corresponding weight at the approximate position in which it is placed. The space to the left of the diagram may be used for additional or explanatory information as necessary.

Shipment Number- 0840-91-980

Front

9131
19830.165

Rear

MHF-LS Qualified Technician
Signature [signature]
Shipment Date 5-11-05

Straight Bill of Lading

Shipper	MHF-LS For GTE Operations Support Incorporated 140 Contiague Rock Road Hicksville, NY 11369	Date: 5/11/2005
Consigned to	MHF-LS @ New York-Atlantic Rail Spur Hicksville, NY 11369	Load in Gondola # MHFX
Emergency Contact:	CHEMTREC 800-424-9300	5242

Total All Trucks
190250

TR: TL:

Quantity	Description		Net Waste Weight
2	Soil, DOT Non-Regulated Waste, Containing		
	Radioactive Materials.		
	Package ID Number		**Pounds:**
	Liner	9141	11800
	Liner	9123	18700
			Total:
			30500
	Packages do not meet the DOT "radioactive material"		
	definition in 49 CFR 173.403.		
	5/12/05		
	Radionuclide: Ac-227,Th-227,~~U238,~~ Th232, Th230,Pa-231,Ra-223		
	Ra-226,Ra-228,Th-228,U-234,U-nat,		
	Total Activity: 3.1051 MBq		
	Physical Form: Solid		
	Chemical Form: Metal Oxide		

GENERATOR CERTIFICATION: I hereby certify and declare that the contents of this consignment are fully and accurately described above by proper shipping name and are classified, packed, marked, and labeled, and are in all respects in proper condition for transport by highway according to applicable international and national government regulations

Printed/Typed Name	Signature		Date
Rob Miller for MHFLS at GTEOSI			5/11/2005
Transporter	Signature		Date
Priority Transport			5/11/2005

Straight Bill of Lading

Shipper	MHF-LS For GTE Operations Support Incorporated 140 Contiague Rock Road Hicksville, NY 11369	Date: 5/11/2005
Consigned to	MHF-LS @ New York-Atlantic Rail Spur Hicksville, NY 11369	Load in Gondola # MHFX
Emergency Contact:	CHEMTREC 800-424-9300	5242
TR:	TL:	

Quantity	Description		Net Waste Weight
2	Soil, DOT Non-Regulated Waste, Containing		
	Radioactive Materials.		
	Package ID Number		**Pounds:**
	Liner	9132	19460
	Liner	9220	19950
			Total:
			39410
	Packages do not meet the DOT "radioactive material"		
	definition in 49 CFR 173.403.		
	RB 5/8/05		
	Radionuclide: Ac-227,Th-227,~~U238,~~ Th232, Th230,Pa-231,Ra-223		
	Ra-226,Ra-228,Th-228,U-234,U-nat,		
	Total Activity: 4.4317 MBq		
	Physical Form: Solid		
	Chemical Form: Metal Oxide		

GENERATOR CERTIFICATION: I hereby certify and declare that the contents of this consignment are fully and accurately described above by proper shipping name and are classified, packed, marked, and labeled, and are in all respects in proper condition for transport by highway according to applicable international and national government regulations.

Printed/Typed Name	Signature		Date
Rob Miller for MHFLS at GTEOSI			5/11/2005
Transporter	Signature		Date
Priority Transport			5/11/2005

Straight Bill of Lading

Shipper MHF-LS For GTE Operations Support Incorporated
140 Contiague Rock Road
Hicksville, NY 11369

Date: 5/11/2005

Consigned to MHF-LS @ New York-Atlantic Rail Spur
Hicksville, NY 11369

Load in Gondola # MHFX 5242

Emergency Contact: CHEMTREC 800-424-9300

TR:

Quantity	Description		Net Waste Weight
2	Soil, DOT Non-Regulated Waste, Containing		
	Radioactive Materials.		
	Package ID Number		**Pounds:**
	Liner	9126	22120
	Liner	9128	13650
			Total:
			35770
	Packages do not meet the DOT "radioactive material"		
	definition in 49 CFR 173.403.		
	1255/2/05		
	Radionuclide: Ac-227,Th-227,~~U238,~~ Th232, Th230,Pa-231,Ra-223		
	Ra-226,Ra-228,Th-228,U-234,U-nat,		
	Total Activity: 9.65 MBq		
	Physical Form: Solid		
	Chemical Form: Metal Oxide		

GENERATOR CERTIFICATION: I hereby certify and declare that the contents of this consignment are fully and accurately described above by proper shipping name and are classified, packed, marked, and labeled, and are in all respects in proper condition for transport by highway according to applicable international and national government regulations.

Printed/Typed Name	Signature		Date
Rob Miller for MHFLS at GTEOSI			5/11/2005
Transporter	Signature		Date
Priority Transport			5/11/2005

Straight Bill of Lading

Shipper MHF-LS For GTE Operations Support Incorporated
140 Contiague Rock Road
Hicksville, NY 11369

Date: 5/11/2005

Consigned to MHF-LS @ New York-Atlantic Rail Spur
Hicksville, NY 11369

Load in Gondola # MHFX 5242

Emergency Contact: CHEMTREC 800-424-9300

TR: TL:

Quantity	Description		Net Waste Weight
2	Soil, DOT Non-Regulated Waste, Containing		
	Radioactive Materials.		
	Package ID Number		**Pounds:**
	Liner	9137	22600
	Liner	9124	16850
			Total:
			39450
	Packages do not meet the DOT "radioactive material"		
	definition in 49 CFR 173.403.		
	J35/12/5		
	Radionuclide: Ac-227,Th-227,~~U238,~~ Th232, Th230,Pa-231,Ra-223		
	Ra-226,Ra-228,Th-228,U-234,U-nat,		
	Total Activity: 3.7208 MBq		
	Physical Form: Solid		
	Chemical Form: Metal Oxide		

GENERATOR CERTIFICATION: I hereby certify and declare that the contents of this consignment are fully and accurately described above by proper shipping name and are classified, packed, marked, and labeled, and are in all respects in proper condition for transport by highway according to applicable international and national government regulations.

Printed/Typed Name	Signature		Date
Rob Miller for MHFLS at GTEOSI			5/11/2005
Transporter	Signature		Date
Priority Transport			5/11/2005

Straight Bill of Lading

Shipper	MHF-LS For GTE Operations Support Incorporated 140 Contiague Rock Road Hicksville, NY 11369	Date: 5/11/2005
Consigned to	MHF-LS @ New York-Atlantic Rail Spur Hicksville, NY 11369	Load in Gondola # MHFX
Emergency Contact:	CHEMTREC 800-424-9300	5242

TR: TL:

Quantity	Description		Net Waste Weight
2	Soil, DOT Non-Regulated Waste, Containing		
	Radioactive Materials.		
	Package ID Number		**Pounds:**
	Liner	9120	14460
	Liner	9121	10830
			Total:
			25290
	Packages do not meet the DOT "radioactive material"		
	definition in 49 CFR 173.403.		
	JS 5/12/05		
	Radionuclide: Ac-227,Th-227~~,U238,~~ Th232, Th230,Pa-231,Ra-223		
	Ra-226,Ra-228,Th-228,U-234,U-nat,		
	Total Activity: 2.86866 MBq		
	Physical Form: Solid		
	Chemical Form: Metal Oxide		

GENERATOR CERTIFICATION: I hereby certify and declare that the contents of this consignment are fully and accurately described above by proper shipping name and are classified, packed, marked, and labeled, and are in all respects in proper condition for transport by highway according to applicable international and national government regulations.

Printed/Typed Name	Signature		Date
Rob Miller for MHFLS at GTEOSI			5/11/2005
Transporter	Signature		Date
Priority Transport	Columbus Thomas Jr.		5/11/2005

Straight Bill of Lading

Shipper MHF-LS For GTE Operations Support Incorporated
140 Contiague Rock Road
Hicksville, NY 11369

Date: 5/11/2005

Consigned to MHF-LS @ New York-Atlantic Rail Spur
Hicksville, NY 11369

Load in Gondola # MHFX 5242

Emergency Contact: CHEMTREC 800-424-9300

TR: TL:

Quantity	Description		Net Waste Weight
1	Soil, DOT Non-Regulated Waste, Containing		
	Radioactive Materials.		
	Package ID Number		**Pounds:**
	Liner	9131	19830
	Liner		
			Total:
			19830
	Packages do not meet the DOT "radioactive material"		
	definition in 49 CFR 173.403.		
	Radionuclide: Ac-227,Th-227,~~U238,~~ Th232, Th230,Pa-231,Ra-223		
	Ra-226,Ra-228,Th-228,U-234,U-nat,		
	Total Activity: 4.4891 MBq		
	Physical Form: Solid		
	Chemical Form: Metal Oxide		

GENERATOR CERTIFICATION: I hereby certify and declare that the contents of this consignment are fully and accurately described above by proper shipping name and are classified, packed, marked, and labeled, and are in all respects in proper condition for transport by highway according to applicable international and national government regulations.

Printed/Typed Name	Signature		Date
Rob Miller for MHFLS at GTEOSI			5/11/2005
Transporter	Signature		Date
Priority Transport			5/11/2005

MHFX	Shipment #		0														
on-site	new	Bag #		9141	9123	9132	9220	9126	9128	9137	9124	9120	9121	9130			
[redacted]	Storage Loc.			11800	18700	19460	19950	22120	13650	22600	16850	14460	10830	19830	[redacted]		
5242	0840-01-980		200200	[redacted]													

container #
9132

shipping check sheet (For Form 540)

	Ac-227		corrected	activity mBq	activity mCi	activity Ci	SNM	source	
		5.286E-002	5.286E-002	1.7208E-02	4.6509E-04	4.6509E-07	grams	kg	
grams			pCi/g				6.4596E-09	6.4596E-12	
8798520		7.2000E+01							
	Pa-231			activity mBq	activity mCi	activity Ci	SNM	source	
19380		2.674E-001	2.674E-001	8.7051E-02	2.3527E-03	2.3527E-06	grams	kg	
grams							5.0058E-05	5.0058E-08	
8798520		4.7000E-02							
	Ra-223			activity mBq	activity mCi	activity Ci	SNM	source	
19380		4.385E-002	4.385E-002	1.4275E-02	3.8582E-04	3.8582E-07	grams	kg	
grams							7.5650E-12	7.5650E-15	
8798520		5.1000E+04							
	Ra-226			activity mBq	activity mCi	activity Ci	SNM	source	
19380		2.319E-001	1.6836E-01	5.4809E-02	1.4813E-03	1.4813E-06	grams	kg	1.37741
grams							1.4813E-06	1.4813E-09	
8798520		1.0000E+00							
	Ra228			activity mBq	activity mCi	activity Ci	SNM	source	
19380		3.280E-001	4.6525E-01	1.5146E-01	4.0935E-03	4.0935E-06	grams	kg	0.705
grams							1.5161E-08	1.5161E-11	
8798520		2.7000E+02							
	TH-227			activity mBq	activity mCi	activity Ci	SNM	source	
19380		5.286E-002	5.286E-002	1.7208E-02	4.6509E-04	4.6509E-07	grams	kg	
grams							1.5003E-11	1.5003E-14	
8798520		3.1000E+04							
	Th-228			activity mBq	activity mCi	activity Ci	SNM	source	
19380		3.170E-001	5.7250E-01	1.8638E-01	5.0372E-03	5.0372E-06	grams	kg	
grams							6.1429E-09	6.1429E-12	0.55371
8798520		8.2000E+02							
	Th-230			activity mBq	activity mCi	activity Ci	SNM	source	
19380		3.280E-001	2.4338E-01	7.9230E-02	2.1413E-03	2.1413E-06	grams	kg	
grams							1.0197E-04	1.0197E-07	1.34771
8798520		2.1000E-02							
	TH-232			activity mBq	activity mCi	activity Ci	SNM	source	
19380		3.280E-001	4.6525E-01	1.5146E-01	4.0935E-03	4.0935E-06	grams	kg	0.705
grams							3.7214E+01	3.7214E-02	
8798520		1.1000E-07							
	U-234			activity mBq	activity mCi	activity Ci	SNM	source	
19380		3.268E+000	2.9020E+00	9.4472E-01	2.5533E-02	2.5533E-05	grams	kg	1.12613
grams							4.1182E-03	4.1182E-06	
8798520		6.2000E-03							
	U-235			activity mBq	activity mCi	activity Ci	SNM	source	
19380		3.066E-001	3.9257E-01	1.2780E-01	3.4541E-03	3.4541E-06	grams	kg	0.781
grams							1.5700E+00	1.5700E-03	
8798520		2.2000E-06							
	U-238			activity mBq	activity mCi	activity Ci	SNM	source	
19380		3.268E+000	4.4103E+00	1.4357E+00	3.8804E-02	3.8804E-05	grams	kg	0.741
grams							1.1413E+02	1.1413E-01	
8798520		3.4000E-07							

Totals for all flag 1 data

			corrected	activity mBq	activity mCi	activity Ci	SNM	source	
19380		8.7925E+00	9.9836E+00	3.2673E+00	8.8306E-02	8.8306E-05	grams	kg	flag1 data
			pCi/g	541 will be < than the 540 (MDA not added)			1.5700E+00	1.5135E-01	
153.8095238				data for NORM					
	U-nat		corrected pCi/g	activity mBq	activity mCi	activity Ci		source	
		3.5746E+00	4.8028E+00	1.5635E+00	4.2258E-02	4.2258E-05		kg	
								5.9518E-02	
		7.1000E-07							

U-nat		corrected pCi/g	activity mBq	activity mCi	activity Ci		source	
	8.7925E+00	9.9836E+00	3.2673E+00	8.8306E-02	8.8306E-05		kg total	norm data
							9.6736E-02	

X

container #
9123

shipping check sheet (For Form 540)

	Ac-227		corrected	activity mBq	activity mCi	activity Ci	SNM	source	
		5.180E-002	5.180E-002	1.6202E-02	4.3789E-04	4.3789E-07	grams	kg	
grams			pCi/g				6.0818E-09	6.0818E-12	
8453480		7.2000E+01							
	Pa-231			activity mBq	activity mCi	activity Ci	SNM	source	
18620		1.475E-001	1.475E-001	4.6135E-02	1.2469E-03	1.2469E-06	grams	kg	
grams							2.6530E-05	2.6530E-08	
8453480		4.7000E-02							
	Ra-223			activity mBq	activity mCi	activity Ci	SNM	source	
18620		3.134E-002	3.134E-002	9.8025E-03	2.6493E-04	2.6493E-07	grams	kg	
grams							5.1947E-12	5.1947E-15	
8453480		5.1000E+04							
	Ra-226			activity mBq	activity mCi	activity Ci	SNM	source	
18620		1.517E-001	1.1013E-01	3.4448E-02	9.3102E-04	9.3102E-07	grams	kg	1.37741
grams							9.3102E-07	9.3102E-10	
8453480		1.0000E+00							
	Ra228			activity mBq	activity mCi	activity Ci	SNM	source	
18620		2.275E-001	3.2270E-01	1.0093E-01	2.7279E-03	2.7279E-06	grams	kg	0.705
grams							1.0103E-08	1.0103E-11	
8453480		2.7000E+02							
	TH-227			activity mBq	activity mCi	activity Ci	SNM	source	
18620		5.180E-002	5.180E-002	1.6202E-02	4.3789E-04	4.3789E-07	grams	kg	
grams							1.4125E-11	1.4125E-14	
8453480		3.1000E+04							
	Th-228			activity mBq	activity mCi	activity Ci	SNM	source	
18620		1.373E-001	2.4796E-01	7.7558E-02	2.0962E-03	2.0962E-06	grams	kg	
grams							2.5563E-09	2.5563E-12	0.55371
8453480		8.2000E+02							
	Th-230			activity mBq	activity mCi	activity Ci	SNM	source	
18620		2.275E-001	1.6880E-01	5.2799E-02	1.4270E-03	1.4270E-06	grams	kg	
grams							6.7952E-05	6.7952E-08	1.34771
8453480		2.1000E-02							
	TH-232			activity mBq	activity mCi	activity Ci	SNM	source	
18620		2.275E-001	3.2270E-01	1.0093E-01	2.7279E-03	2.7279E-06	grams	kg	0.705
grams							2.4799E+01	2.4799E-02	
8453480		1.1000E-07							
	U-234			activity mBq	activity mCi	activity Ci	SNM	source	
18620		1.003E+000	8.9066E-01	2.7858E-01	7.5292E-03	7.5292E-06	grams	kg	1.12613
grams							1.2144E-03	1.2144E-06	
8453480		6.2000E-03							
	U-235			activity mBq	activity mCi	activity Ci	SNM	source	
18620		2.067E-001	2.6466E-01	8.2780E-02	2.2373E-03	2.2373E-06	grams	kg	0.781
grams							1.0170E+00	1.0170E-03	
8453480		2.2000E-06							
	U-238			activity mBq	activity mCi	activity Ci	SNM	source	
18620		1.003E+000	1.3536E+00	4.2337E-01	1.1442E-02	1.1442E-05	grams	kg	0.741
grams							3.3654E+01	3.3654E-02	
8453480		3.4000E-07							

Totals for all flag 1 data

			corrected	activity mBq	activity mCi	activity Ci	SNM	source	
18620		3.4666E+00	3.9118E+00	1.2397E+00	3.3506E-02	3.3506E-05	grams	kg	flag1 data
			pCi/g	541 will be < than the 540 (MDA not added)			1.0170E+00	5.8455E-02	
147.7777778				data for NORM					
	U-nat		corrected pCi/g	activity mBq	activity mCi	activity Ci		source	
		1.2097E+00	1.6182E+00	5.0615E-01	1.3680E-02	1.3680E-05		kg	
								1.9267E-02	
		7.1000E-07							

U-nat		corrected pCi/g	activity mBq	activity mCi	activity Ci		source	
	3.4666E+00	3.9118E+00	1.2397E+00	3.3506E-02	3.3506E-05		kg total	norm data
							4.4068E-02	

X

container #
9141

shipping check sheet (For Form 540)

	Ac-227		corrected	activity mBq	activity mCi	activity Ci	SNM	source	
		5.800E-002	5.800E-002	1.1419E-02	3.0861E-04	3.0861E-07	grams	kg	
grams			pCi/g				4.2863E-09	4.2863E-12	
5320880		7.2000E+01							
	Pa-231			activity mBq	activity mCi	activity Ci	SNM	source	
11720		2.933E-001	2.933E-001	5.7743E-02	1.5606E-03	1.5606E-06	grams	kg	
grams							3.3205E-05	3.3205E-08	
5320880		4.7000E-02							
	Ra-223			activity mBq	activity mCi	activity Ci	SNM	source	
11720		6.131E-002	6.131E-002	1.2070E-02	3.2622E-04	3.2622E-07	grams	kg	
grams							6.3965E-12	6.3965E-15	
5320880		5.1000E+04							
	Ra-226			activity mBq	activity mCi	activity Ci	SNM	source	
11720		2.220E-001	1.6117E-01	3.1730E-02	8.5758E-04	8.5758E-07	grams	kg	1.37741
grams							8.5758E-07	8.5758E-10	
5320880		1.0000E+00							
	Ra228			activity mBq	activity mCi	activity Ci	SNM	source	
11720		6.260E-001	8.8794E-01	1.7481E-01	4.7246E-03	4.7246E-06	grams	kg	0.705
grams							1.7499E-08	1.7499E-11	
5320880		2.7000E+02							
	TH-227			activity mBq	activity mCi	activity Ci	SNM	source	
11720		5.800E-002	5.800E-002	1.1419E-02	3.0861E-04	3.0861E-07	grams	kg	
grams							9.9552E-12	9.9552E-15	
5320880		3.1000E+04							
	Th-228			activity mBq	activity mCi	activity Ci	SNM	source	
11720		6.157E-001	1.1120E+00	2.1891E-01	5.9166E-03	5.9166E-06	grams	kg	
grams							7.2153E-09	7.2153E-12	0.55371
5320880		8.2000E+02							
	Th-230			activity mBq	activity mCi	activity Ci	SNM	source	
11720		6.260E-001	4.6449E-01	9.1446E-02	2.4715E-03	2.4715E-06	grams	kg	
grams							1.1769E-04	1.1769E-07	1.34771
5320880		2.1000E-02							
	TH-232			activity mBq	activity mCi	activity Ci	SNM	source	
11720		6.260E-001	8.8794E-01	1.7481E-01	4.7246E-03	4.7246E-06	grams	kg	0.705
grams							4.2951E+01	4.2951E-02	
5320880		1.1000E-07							
	U-234			activity mBq	activity mCi	activity Ci	SNM	source	
11720		2.248E+000	1.9962E+00	3.9300E-01	1.0622E-02	1.0622E-05	grams	kg	1.12613
grams							1.7132E-03	1.7132E-06	
5320880		6.2000E-03							
	U-235			activity mBq	activity mCi	activity Ci	SNM	source	
11720		3.601E-001	4.6108E-01	9.0773E-02	2.4533E-03	2.4533E-06	grams	kg	0.781
grams							1.1151E+00	1.1151E-03	
5320880		2.2000E-06							
	U-238			activity mBq	activity mCi	activity Ci	SNM	source	
11720		2.248E+000	3.0337E+00	5.9726E-01	1.6142E-02	1.6142E-05	grams	kg	0.741
grams							4.7477E+01	4.7477E-02	
5320880		3.4000E-07							

Totals for all flag 1 data

			corrected	activity mBq	activity mCi	activity Ci	SNM	source	
11720		8.0424E+00	9.4171E+00	1.8654E+00	5.0416E-02	5.0416E-05	grams	kg	flag1 data
			pCi/g	541 will be < than the 540 (MDA not added)			1.1151E+00	9.0430E-02	
93.01587302				data for NORM					
	U-nat		corrected pCi/g	activity mBq	activity mCi	activity Ci		source	
		2.6081E+00	3.4948E+00	6.8803E-01	1.8595E-02	1.8595E-05		kg	
								2.6191E-02	
		7.1000E-07							

U-nat		corrected pCi/g	activity mBq	activity mCi	activity Ci		source	
	8.0424E+00	9.4171E+00	1.8654E+00	5.0416E-02	5.0416E-05		kg total	norm data
							6.9144E-02

container #
9220

shipping check sheet (For Form 540)

	Ac-227		corrected	activity mBq	activity mCi	activity Ci	SNM	source	
		1.136E-001	1.136E-001	3.7917E-02	1.0248E-03	1.0248E-06	grams	kg	
grams			pCi/g				1.4233E-08	1.4233E-11	
9020980		7.2000E+01							
	Pa-231			activity mBq	activity mCi	activity Ci	SNM	source	
19870		2.428E-001	2.428E-001	8.1041E-02	2.1903E-03	2.1903E-06	grams	kg	
grams							4.6602E-05	4.6602E-08	
9020980		4.7000E-02							
	Ra-223			activity mBq	activity mCi	activity Ci	SNM	source	
19870		5.507E-002	5.507E-002	1.8381E-02	4.9679E-04	4.9679E-07	grams	kg	
grams							9.7409E-12	9.7409E-15	
9020980		5.1000E+04							
	Ra-226			activity mBq	activity mCi	activity Ci	SNM	source	
19870		1.250E-001	9.0750E-02	3.0290E-02	8.1865E-04	8.1865E-07	grams	kg	1.37741
grams							8.1865E-07	8.1865E-10	
9020980		1.0000E+00							
	Ra228			activity mBq	activity mCi	activity Ci	SNM	source	
19870		2.084E-001	2.9560E-01	9.8665E-02	2.6666E-03	2.6666E-06	grams	kg	0.705
grams							9.8764E-09	9.8764E-12	
9020980		2.7000E+02							
	TH-227			activity mBq	activity mCi	activity Ci	SNM	source	
19870		1.136E-001	1.136E-001	3.7917E-02	1.0248E-03	1.0248E-06	grams	kg	
grams							3.3058E-11	3.3058E-14	
9020980		3.1000E+04							
	Th-228			activity mBq	activity mCi	activity Ci	SNM	source	
19870		1.631E-001	2.9456E-01	9.8317E-02	2.8572E-03	2.8572E-06	grams	kg	
grams							3.2405E-09	3.2405E-12	0.55371
9020980		8.2000E+02							
	Th-230			activity mBq	activity mCi	activity Ci	SNM	source	
19870		2.084E-001	1.5463E-01	5.1613E-02	1.3949E-03	1.3949E-06	grams	kg	
grams							6.6426E-05	6.6426E-08	1.34771
9020980		2.1000E-02							
	TH-232			activity mBq	activity mCi	activity Ci	SNM	source	
19870		2.084E-001	2.9560E-01	9.8665E-02	2.6666E-03	2.6666E-06	grams	kg	0.705
grams							2.4242E+01	2.4242E-02	
9020980		1.1000E-07							
	U-234			activity mBq	activity mCi	activity Ci	SNM	source	
19870		7.932E-001	7.0436E-01	2.3510E-01	6.3540E-03	6.3540E-06	grams	kg	1.12613
grams							1.0248E-03	1.0248E-06	
9020980		6.2000E-03							
	U-235			activity mBq	activity mCi	activity Ci	SNM	source	
19870		4.495E-002	5.7554E-02	1.9210E-02	5.1920E-04	5.1920E-07	grams	kg	0.781
grams							2.3600E-01	2.3600E-04	
9020980		2.2000E-06							
	U-238			activity mBq	activity mCi	activity Ci	SNM	source	
19870		7.932E-001	1.0704E+00	3.5729E-01	9.6565E-03	9.6565E-06	grams	kg	0.741
grams							2.8401E+01	2.8401E-02	
9020980		3.4000E-07							

Totals for all flag 1 data

			corrected	activity mBq	activity mCi	activity Ci	SNM	source	
19870		3.0697E+00	3.3750E+00	1.1644E+00	3.1470E-02	3.1470E-05	grams	kg	flag1 data
			pCi/g	541 will be < than the 540 (MDA not added)			2.3600E-01	5.2645E-02	
157.6984127				data for NORM					
	U-nat		corrected pCi/g	activity mBq	activity mCi	activity Ci		source	
		8.3815E-01	1.1280E+00	3.7650E-01	1.0176E-02	1.0176E-05		kg	
								1.4332E-02	
		7.1000E-07							

U-nat		corrected pCi/g	activity mBq	activity mCi	activity Ci		source	
	3.0697E+00	3.3750E+00	1.1644E+00	3.1470E-02	3.1470E-05		kg total	norm data
							3.8575E-02	

X

container #
9126

shipping check sheet (For Form 540)

	Ac-227		corrected	activity mBq	activity mCi	activity Ci	SNM	source	
		4.855E-002	4.855E-002	1.7975E-02	4.8580E-04	4.8580E-07	grams	kg	
grams			pCi/g				6.7472E-09	6.7472E-12	
10006160		7.2000E+01							
	Pa-231			activity mBq	activity mCi	activity Ci	SNM	source	
22040		1.200E-001	1.200E-001	4.4427E-02	1.2007E-03	1.2007E-06	grams	kg	
grams							2.5548E-05	2.5548E-08	
10006160		4.7000E-02							
	Ra-223			activity mBq	activity mCi	activity Ci	SNM	source	
22040		2.680E-002	2.680E-002	9.9221E-03	2.6817E-04	2.6817E-07	grams	kg	
grams							5.2581E-12	5.2581E-15	
10006160		5.1000E+04							
	Ra-226			activity mBq	activity mCi	activity Ci	SNM	source	
22040		1.464E-001	1.0629E-01	3.9350E-02	1.0635E-03	1.0635E-06	grams	kg	1.37741
grams							1.0635E-06	1.0635E-09	
10006160		1.0000E+00							
	Ra228			activity mBq	activity mCi	activity Ci	SNM	source	
22040		1.803E-001	2.5574E-01	9.4684E-02	2.5590E-03	2.5590E-06	grams	kg	0.705
grams							9.4779E-09	9.4779E-12	
10006160		2.7000E+02							
	TH-227			activity mBq	activity mCi	activity Ci	SNM	source	
22040		4.855E-002	4.855E-002	1.7975E-02	4.8580E-04	4.8580E-07	grams	kg	
grams							1.5671E-11	1.5671E-14	
10006160		3.1000E+04							
	Th-228			activity mBq	activity mCi	activity Ci	SNM	source	
22040		2.039E-001	3.6824E-01	1.3633E-01	3.6847E-03	3.6847E-06	grams	kg	
grams							4.4935E-09	4.4935E-12	0.55371
10006160		8.2000E+02							
	Th-230			activity mBq	activity mCi	activity Ci	SNM	source	
22040		1.803E-001	1.3378E-01	4.9530E-02	1.3386E-03	1.3386E-06	grams	kg	
grams							6.3745E-05	6.3745E-08	1.34771
10006160		2.1000E-02							
	TH-232			activity mBq	activity mCi	activity Ci	SNM	source	
22040		1.803E-001	2.5574E-01	9.4684E-02	2.5590E-03	2.5590E-06	grams	kg	0.705
grams							2.3264E+01	2.3264E-02	
10006160		1.1000E-07							
	U-234			activity mBq	activity mCi	activity Ci	SNM	source	
22040		3.105E-001	2.7572E-01	1.0208E-01	2.7589E-03	2.7589E-06	grams	kg	1.12613
grams							4.4499E-04	4.4499E-07	
10006160		6.2000E-03							
	U-235			activity mBq	activity mCi	activity Ci	SNM	source	
22040		7.139E-002	9.1408E-02	3.3842E-02	9.1465E-04	9.1465E-07	grams	kg	0.781
grams							4.1575E-01	4.1575E-04	
10006160		2.2000E-06							
	U-238			activity mBq	activity mCi	activity Ci	SNM	source	
22040		3.105E-001	4.1903E-01	1.5514E-01	4.1929E-03	4.1929E-06	grams	kg	0.741
grams							1.2332E+01	1.2332E-02	
10006160		3.4000E-07							

Totals for all flag 1 data

			corrected	activity mBq	activity mCi	activity Ci	SNM	source	
22040		1.8275E+00	2.1013E+00	7.9594E-01	2.1512E-02	2.1512E-05	grams	kg	flag1 data
			pCi/g	541 will be < than the 540 (MDA not added)			4.1575E-01	3.5596E-02	
174.9206349				data for NORM					
	U-nat		corrected pCi/g	activity mBq	activity mCi	activity Ci		source	
		3.8189E-01	5.1044E-01	1.8898E-01	5.1075E-03	5.1075E-06		kg	
								7.1937E-03	
		7.1000E-07							

U-nat		corrected pCi/g	activity mBq	activity mCi	activity Ci		source	
	1.8275E+00	2.1013E+00	7.9594E-01	2.1512E-02	2.1512E-05		kg total	norm data
							3.0458E-02	

X

container #
9128

shipping check sheet (For Form 540)

	Ac-227		corrected	activity mBq	activity mCi	activity Ci	SNM	source	
		8.085E-002	8.085E-002	1.8430E-02	4.9810E-04	4.9810E-07	grams	kg	
grams			pCi/g				6.9180E-09	6.9180E-12	
6160780		7.2000E+01							
	Pa-231			activity mBq	activity mCi	activity Ci	SNM	source	
13570		2.674E-001	2.674E-001	6.0954E-02	1.6474E-03	1.6474E-06	grams	kg	
grams							3.5051E-05	3.5051E-08	
6160780		4.7000E-02							
	Ra-223			activity mBq	activity mCi	activity Ci	SNM	source	
13570		1.544E-001	1.544E-001	3.5195E-02	9.5122E-04	9.5122E-07	grams	kg	
grams							1.8651E-11	1.8651E-14	
6160780		5.1000E+04							
	Ra-226			activity mBq	activity mCi	activity Ci	SNM	source	
13570		3.681E-001	2.6724E-01	6.0917E-02	1.6464E-03	1.6464E-06	grams	kg	1.37741
grams							1.6464E-06	1.6464E-09	
6160780		1.0000E+00							
	Ra228			activity mBq	activity mCi	activity Ci	SNM	source	
13570		8.943E-001	1.2685E+00	2.8916E-01	7.8150E-03	7.8150E-06	grams	kg	0.705
grams							2.8944E-08	2.8944E-11	
6160780		2.7000E+02							
	TH-227			activity mBq	activity mCi	activity Ci	SNM	source	
13570		8.085E-002	8.085E-002	1.8430E-02	4.9810E-04	4.9810E-07	grams	kg	
grams							1.6068E-11	1.6068E-14	
6160780		3.1000E+04							
	Th-228			activity mBq	activity mCi	activity Ci	SNM	source	
13570		7.667E-001	1.3847E+00	3.1563E-01	8.5306E-03	8.5306E-06	grams	kg	
grams							1.0403E-08	1.0403E-11	0.55371
6160780		8.2000E+02							
	Th-230			activity mBq	activity mCi	activity Ci	SNM	source	
13570		8.943E-001	6.6357E-01	1.5126E-01	4.0881E-03	4.0881E-06	grams	kg	
grams							1.9467E-04	1.9467E-07	1.34771
6160780		2.1000E-02							
	TH-232			activity mBq	activity mCi	activity Ci	SNM	source	
13570		8.943E-001	1.2685E+00	2.8916E-01	7.8150E-03	7.8150E-06	grams	kg	0.705
grams							7.1046E+01	7.1046E-02	
6160780		1.1000E-07							
	U-234			activity mBq	activity mCi	activity Ci	SNM	source	
13570		1.443E+001	1.2814E+01	2.9209E+00	7.8943E-02	7.8943E-05	grams	kg	1.12613
grams							1.2733E-02	1.2733E-05	
6160780		6.2000E-03							
	U-235			activity mBq	activity mCi	activity Ci	SNM	source	
13570		8.755E-001	1.1210E+00	2.5553E-01	6.9062E-03	6.9062E-06	grams	kg	0.781
grams							3.1392E+00	3.1392E-03	
6160780		2.2000E-06							
	U-238			activity mBq	activity mCi	activity Ci	SNM	source	
13570		1.443E+001	1.9474E+01	4.4390E+00	1.1997E-01	1.1997E-04	grams	kg	0.741
grams							3.5286E+02	3.5286E-01	
6160780		3.4000E-07							

Totals for all flag 1 data

			corrected	activity mBq	activity mCi	activity Ci	SNM	source	
13570		3.4137E+01	3.8764E+01	8.8546E+00	2.3931E-01	2.3931E-04	grams	kg	flag1 data
			pCi/g	541 will be < than the 540 (MDA not added)			3.1392E+00	4.2392E-01	
107.6984127				data for NORM					
	U-nat		corrected pCi/g	activity mBq	activity mCi	activity Ci		source	
		1.5306E+01	2.0595E+01	4.6945E+00	1.2688E-01	1.2688E-04		kg	
								1.7870E-01	
		7.1000E-07							

U-nat		corrected pCi/g	activity mBq	activity mCi	activity Ci		source	
	3.4137E+01	3.8764E+01	8.8546E+00	2.3931E-01	2.3931E-04		kg total	norm data
							2.4976E-01	

X

container #
9137

shipping check sheet (For Form 540)

	Ac-227		corrected	activity mBq	activity mCi	activity Ci	SNM	source	
		7.037E-002	7.037E-002	2.6620E-02	7.1947E-04	7.1947E-07	grams	kg	
grams			pCi/g				9.9926E-09	9.9926E-12	
10224080		7.2000E+01							
	Pa-231			activity mBq	activity mCi	activity Ci	SNM	source	
22520		1.695E-001	1.695E-001	6.4120E-02	1.7330E-03	1.7330E-06	grams	kg	
grams							3.6872E-05	3.6872E-08	
10224080		4.7000E-02							
	Ra-223			activity mBq	activity mCi	activity Ci	SNM	source	
22520		2.370E-002	2.370E-002	8.9655E-03	2.4231E-04	2.4231E-07	grams	kg	
grams							4.7512E-12	4.7512E-15	
10224080		5.1000E+04							
	Ra-226			activity mBq	activity mCi	activity Ci	SNM	source	
22520		2.762E-001	2.0052E-01	7.5855E-02	2.0501E-03	2.0501E-06	grams	kg	1.37741
grams							2.0501E-06	2.0501E-09	
10224080		1.0000E+00							
	Ra228			activity mBq	activity mCi	activity Ci	SNM	source	
22520		4.167E-001	5.9106E-01	2.2359E-01	6.0431E-03	6.0431E-06	grams	kg	0.705
grams							2.2382E-08	2.2382E-11	
10224080		2.7000E+02							
	TH-227			activity mBq	activity mCi	activity Ci	SNM	source	
22520		7.037E-002	7.037E-002	2.6620E-02	7.1947E-04	7.1947E-07	grams	kg	
grams							2.3209E-11	2.3209E-14	
10224080		3.1000E+04							
	Th-228			activity mBq	activity mCi	activity Ci	SNM	source	
22520		3.312E-001	5.9815E-01	2.2627E-01	6.1155E-03	6.1155E-06	grams	kg	
grams							7.4579E-09	7.4579E-12	0.55371
10224080		8.2000E+02							
	Th-230			activity mBq	activity mCi	activity Ci	SNM	source	
22520		4.167E-001	3.0919E-01	1.1896E-01	3.1612E-03	3.1612E-06	grams	kg	
grams							1.5053E-04	1.5053E-07	1.34771
10224080		2.1000E-02							
	TH-232			activity mBq	activity mCi	activity Ci	SNM	source	
22520		4.167E-001	5.9106E-01	2.2359E-01	6.0431E-03	6.0431E-06	grams	kg	0.705
grams							5.4937E+01	5.4937E-02	
10224080		1.1000E-07							
	U-234			activity mBq	activity mCi	activity Ci	SNM	source	
22520		1.411E+000	1.2530E+00	4.7398E-01	1.2810E-02	1.2810E-05	grams	kg	1.12613
grams							2.0662E-03	2.0662E-06	
10224080		6.2000E-03							
	U-235			activity mBq	activity mCi	activity Ci	SNM	source	
22520		1.723E-001	2.2061E-01	8.3457E-02	2.2556E-03	2.2556E-06	grams	kg	0.781
grams							1.0253E+00	1.0253E-03	
10224080		2.2000E-06							
	U-238			activity mBq	activity mCi	activity Ci	SNM	source	
22520		1.411E+000	1.9042E+00	7.2034E-01	1.9489E-02	1.9489E-05	grams	kg	0.741
grams							5.7260E+01	5.7260E-02	
10224080		3.4000E-07							

Totals for all flag 1 data

			corrected	activity mBq	activity mCi	activity Ci	SNM	source	
22520		5.1857E+00	5.9313E+00	2.2704E+00	6.1362E-02	6.1362E-05	grams	kg	flag1 data
			pCi/g	541 will be < than the 540 (MDA not added)			1.0253E+00	1.1220E-01	
178.7301587				data for NORM					
	U-nat		corrected pCi/g	activity mBq	activity mCi	activity Ci		source	
		1.5833E+00	2.1248E+00	8.0379E-01	2.1724E-02	2.1724E-05		kg	
								3.0597E-02	
		7.1000E-07							

U-nat		corrected pCi/g	activity mBq	activity mCi	activity Ci		source	
	5.1857E+00	5.9313E+00	2.2704E+00	6.1362E-02	6.1362E-05		kg total	norm data
							8.5537E-02	

x

container #
9124

shipping check sheet (For Form 540)

	Ac-227		corrected	activity mBq	activity mCi	activity Ci	SNM	source	
		4.165E-002	4.165E-002	1.1733E-02	3.1711E-04	3.1711E-07	grams	kg	
grams			pCi/g				4.4042E-09	4.4042E-12	
7613580		7.2000E+01							
	Pa-231			activity mBq	activity mCi	activity Ci	SNM	source	
16770		1.643E-001	1.643E-001	4.6284E-02	1.2509E-03	1.2509E-06	grams	kg	
grams							2.6615E-05	2.6615E-08	
7613580		4.7000E-02							
	Ra-223			activity mBq	activity mCi	activity Ci	SNM	source	
16770		3.867E-002	3.867E-002	1.0893E-02	2.9442E-04	2.9442E-07	grams	kg	
grams							5.7729E-12	5.7729E-15	
7613580		5.1000E+04							
	Ra-226			activity mBq	activity mCi	activity Ci	SNM	source	
16770		2.135E-001	1.5500E-01	4.3664E-02	1.1801E-03	1.1801E-06	grams	kg	1.37741
grams							1.1801E-06	1.1801E-09	
7613580		1.0000E+00							
	Ra228			activity mBq	activity mCi	activity Ci	SNM	source	
16770		3.587E-001	5.0879E-01	1.4333E-01	3.8737E-03	3.8737E-06	grams	kg	0.705
grams							1.4347E-08	1.4347E-11	
7613580		2.7000E+02							
	Th-227			activity mBq	activity mCi	activity Ci	SNM	source	
16770		4.165E-002	4.165E-002	1.1733E-02	3.1711E-04	3.1711E-07	grams	kg	
grams							1.0229E-11	1.0229E-14	
7613580		3.1000E+04							
	Th-228			activity mBq	activity mCi	activity Ci	SNM	source	
16770		3.187E-001	5.7557E-01	1.6214E-01	4.3822E-03	4.3822E-06	grams	kg	
grams							5.3441E-09	5.3441E-12	0.55371
7613580		8.2000E+02							
	Th-230			activity mBq	activity mCi	activity Ci	SNM	source	
16770		3.587E-001	2.6616E-01	7.4977E-02	2.0264E-03	2.0264E-06	grams	kg	
grams							9.6495E-05	9.6495E-08	1.34771
7613580		2.1000E-02							
	Th-232			activity mBq	activity mCi	activity Ci	SNM	source	
16770		3.587E-001	5.0879E-01	1.4333E-01	3.8737E-03	3.8737E-06	grams	kg	0.705
grams							3.5216E+01	3.5216E-02	
7613580		1.1000E-07							
	U-234			activity mBq	activity mCi	activity Ci	SNM	source	
16770		1.217E+000	1.0807E+00	3.0443E-01	8.2279E-03	8.2279E-06	grams	kg	1.12613
grams							1.3271E-03	1.3271E-06	
7613580		6.2000E-03							
	U-235			activity mBq	activity mCi	activity Ci	SNM	source	
16770		9.754E-002	1.2489E-01	3.5182E-02	9.5087E-04	9.5087E-07	grams	kg	0.781
grams							4.3221E-01	4.3221E-04	
7613580		2.2000E-06							
	U-238			activity mBq	activity mCi	activity Ci	SNM	source	
16770		1.217E+000	1.6424E+00	4.6266E-01	1.2504E-02	1.2504E-05	grams	kg	0.741
grams							3.6778E+01	3.6778E-02	
7613580		3.4000E-07							

Totals for all flag 1 data

			corrected	activity mBq	activity mCi	activity Ci	SNM	source	
16770		4.4261E+00	5.1069E+00	1.4504E+00	3.9199E-02	3.9199E-05	grams	kg	flag1 data
			pCi/g	541 will be < than the 540 (MDA not added)			4.3221E-01	7.1995E-02	
133.0952381				data for NORM					
	U-nat		corrected pCi/g	activity mBq	activity mCi	activity Ci		source	
		1.3145E+00	1.7673E+00	4.9784E-01	1.3455E-02	1.3455E-05		kg	
								1.8951E-02	
		7.1000E-07							

U-nat		corrected pCi/g	activity mBq	activity mCi	activity Ci		source	
	4.4261E+00	5.1069E+00	1.4504E+00	3.9199E-02	3.9199E-05		kg total	norm data
							5.4168E-02	

X

container #
9120

shipping check sheet (For Form 540)

	Ac-227		corrected	activity mBq	activity mCi	activity Ci	SNM	source	
		2.819E-002	2.819E-002	6.8094E-03	1.8404E-04	1.8404E-07	grams	kg	
grams			pCi/g				2.5561E-09	2.5561E-12	
6528520		7.2000E+01							
	Pa-231			activity mBq	activity mCi	activity Ci	SNM	source	
14380		1.085E-001	1.085E-001	2.6209E-02	7.0834E-04	7.0834E-07	grams	kg	
grams							1.5071E-05	1.5071E-08	
6528520		4.7000E-02							
	Ra-223			activity mBq	activity mCi	activity Ci	SNM	source	
14380		2.151E-002	2.151E-002	5.1959E-03	1.4043E-04	1.4043E-07	grams	kg	
grams							2.7535E-12	2.7535E-15	
6528520		5.1000E+04							
	Ra-226			activity mBq	activity mCi	activity Ci	SNM	source	
14380		1.828E-001	1.3271E-01	3.2057E-02	8.6642E-04	8.6642E-07	grams	kg	1.37741
grams							8.6642E-07	8.6642E-10	
6528520		1.0000E+00							
	Ra228			activity mBq	activity mCi	activity Ci	SNM	source	
14380		3.031E-001	4.2993E-01	1.0385E-01	2.8068E-03	2.8068E-06	grams	kg	0.705
grams							1.0396E-08	1.0396E-11	
6528520		2.7000E+02							
	TH-227			activity mBq	activity mCi	activity Ci	SNM	source	
14380		2.819E-002	2.819E-002	6.8094E-03	1.8404E-04	1.8404E-07	grams	kg	
grams							5.9367E-12	5.9367E-15	
6528520		3.1000E+04							
	Th-228			activity mBq	activity mCi	activity Ci	SNM	source	
14380		2.690E-001	4.8581E-01	1.1735E-01	3.1716E-03	3.1716E-06	grams	kg	
grams							3.8679E-09	3.8679E-12	0.55371
6528520		8.2000E+02							
	Th-230			activity mBq	activity mCi	activity Ci	SNM	source	
14380		3.031E-001	2.2490E-01	5.4326E-02	1.4683E-03	1.4683E-06	grams	kg	
grams							6.9917E-05	6.9917E-08	1.34771
6528520		2.1000E-02							
	TH-232			activity mBq	activity mCi	activity Ci	SNM	source	
14380		3.031E-001	4.2993E-01	1.0385E-01	2.8068E-03	2.8068E-06	grams	kg	0.705
grams							2.5516E+01	2.5516E-02	
6528520		1.1000E-07							
	U-234			activity mBq	activity mCi	activity Ci	SNM	source	
14380		2.624E+000	2.3301E+00	5.6285E-01	1.5212E-02	1.5212E-05	grams	kg	1.12613
grams							2.4536E-03	2.4536E-06	
6528520		6.2000E-03							
	U-235			activity mBq	activity mCi	activity Ci	SNM	source	
14380		1.991E-001	2.5493E-01	6.1580E-02	1.6643E-03	1.6643E-06	grams	kg	0.781
grams							7.5651E-01	7.5651E-04	
6528520		2.2000E-06							
	U-238			activity mBq	activity mCi	activity Ci	SNM	source	
14380		2.624E+000	3.5412E+00	8.5539E-01	2.3119E-02	2.3119E-05	grams	kg	0.741
grams							6.7996E+01	6.7996E-02	
6528520		3.4000E-07							

Totals for all flag 1 data

			corrected	activity mBq	activity mCi	activity Ci	SNM	source	
14380		6.9946E+00	7.9877E+00	1.9363E+00	5.2332E-02	5.2332E-05	grams	kg	flag1 data
			pCi/g	541 will be < than the 540 (MDA not added)			7.5651E-01	9.3515E-02	
114.1269841				data for NORM					
	U-nat		corrected pCi/g	activity mBq	activity mCi	activity Ci		source	
		2.8231E+00	3.7961E+00	9.1697E-01	2.4783E-02	2.4783E-05		kg	
								3.4905E-02	
		7.1000E-07							

U-nat		corrected pCi/g	activity mBq	activity mCi	activity Ci		source	
	6.9946E+00	7.9877E+00	1.9363E+00	5.2332E-02	5.2332E-05		kg total	norm data
							6.0424E-02	

X

container #
9121

shipping check sheet (For Form 540)

	Ac-227		corrected	activity mBq	activity mCi	activity Ci	SNM	source	
		7.298E-002	7.298E-002	1.3179E-02	3.5618E-04	3.5618E-07	grams	kg	
grams			pCi/g				4.9469E-09	4.9469E-12	
4880500		7.2000E+01							
	Pa-231			activity mBq	activity mCi	activity Ci	SNM	source	
10750		2.372E-001	2.372E-001	4.2833E-02	1.1577E-03	1.1577E-06	grams	kg	
grams							2.4631E-05	2.4631E-08	
4880500		4.7000E-02							
	Ra-223			activity mBq	activity mCi	activity Ci	SNM	source	
10750		4.067E-002	4.067E-002	7.3441E-03	1.9849E-04	1.9849E-07	grams	kg	
grams							3.8920E-12	3.8920E-15	
4880500		5.1000E+04							
	Ra-226			activity mBq	activity mCi	activity Ci	SNM	source	
10750		3.235E-001	2.3486E-01	4.2411E-02	1.1462E-03	1.1462E-06	grams	kg	1.37741
grams							1.1462E-06	1.1462E-09	
4880500		1.0000E+00							
	Ra228			activity mBq	activity mCi	activity Ci	SNM	source	
10750		4.452E-001	6.3149E-01	1.1403E-01	3.0820E-03	3.0820E-06	grams	kg	0.705
grams							1.1415E-08	1.1415E-11	
4880500		2.7000E+02							
	TH-227			activity mBq	activity mCi	activity Ci	SNM	source	
10750		7.298E-002	7.298E-002	1.3179E-02	3.5618E-04	3.5618E-07	grams	kg	
grams							1.1490E-11	1.1490E-14	
4880500		3.1000E+04							
	Th-228			activity mBq	activity mCi	activity Ci	SNM	source	
10750		4.324E-001	7.8091E-01	1.4102E-01	3.8113E-03	3.8113E-06	grams	kg	
grams							4.6479E-09	4.6479E-12	0.55371
4880500		8.2000E+02							
	Th-230			activity mBq	activity mCi	activity Ci	SNM	source	
10750		4.452E-001	3.3034E-01	5.9652E-02	1.6122E-03	1.6122E-06	grams	kg	
grams							7.6772E-05	7.6772E-08	1.34771
4880500		2.1000E-02							
	TH-232			activity mBq	activity mCi	activity Ci	SNM	source	
10750		4.452E-001	6.3149E-01	1.1403E-01	3.0820E-03	3.0820E-06	grams	kg	0.705
grams							2.8018E+01	2.8018E-02	
4880500		1.1000E-07							
	U-234			activity mBq	activity mCi	activity Ci	SNM	source	
10750		7.111E-001	6.3145E-01	1.1403E-01	3.0818E-03	3.0818E-06	grams	kg	1.12613
grams							4.9707E-04	4.9707E-07	
4880500		6.2000E-03							
	U-235			activity mBq	activity mCi	activity Ci	SNM	source	
10750		4.211E-001	5.3918E-01	9.7364E-02	2.6315E-03	2.6315E-06	grams	kg	0.781
grams							1.1961E+00	1.1961E-03	
4880500		2.2000E-06							
	U-238			activity mBq	activity mCi	activity Ci	SNM	source	
10750		7.111E-001	9.5965E-01	1.7329E-01	4.6836E-03	4.6836E-06	grams	kg	0.741
grams							1.3775E+01	1.3775E-02	
4880500		3.4000E-07							

Totals for all flag 1 data

			corrected	activity mBq	activity mCi	activity Ci	SNM	source	
10750		4.3586E+00	5.0902E+00	9.3236E-01	2.5199E-02	2.5199E-05	grams	kg	flag1 data
			pCi/g	541 will be < than the 540 (MDA not added)			1.1961E+00	4.1794E-02	
85.31746032				data for NORM					
	U-nat		corrected pCi/g	activity mBq	activity mCi	activity Ci		source	
		1.1322E+00	1.4988E+00	2.7066E-01	7.3150E-03	7.3150E-06		kg	
								1.0303E-02	
		7.1000E-07							

U-nat		corrected pCi/g	activity mBq	activity mCi	activity Ci		source
	4.3586E+00	5.0902E+00	9.3236E-01	2.5199E-02	2.5199E-05		kg total
							3.8322E-02

norm data

X

container #
9131

shipping check sheet (For Form 540)

	Ac-227		corrected	activity mBq	activity mCi	activity Ci	SNM	source	
		6.189E-002	6.189E-002	2.0533E-02	5.5494E-04	5.5494E-07	grams	kg	
grams			pCi/g				7.7075E-09	7.7075E-12	
8966500		7.2000E+01							
	Pa-231			activity mBq	activity mCi	activity Ci	SNM	source	
19750		2.324E-001	2.324E-001	7.7101E-02	2.0838E-03	2.0838E-06	grams	kg	
grams							4.4336E-05	4.4336E-08	
8966500		4.7000E-02							
	Ra-223			activity mBq	activity mCi	activity Ci	SNM	source	
19750		4.529E-002	4.529E-002	1.5025E-02	4.0609E-04	4.0609E-07	grams	kg	
grams							7.9626E-12	7.9626E-15	
8966500		5.1000E+04							
	Ra-226			activity mBq	activity mCi	activity Ci	SNM	source	
19750		2.824E-001	2.0502E-01	6.8018E-02	1.8383E-03	1.8383E-06	grams	kg	1.37741
grams							1.8383E-06	1.8383E-09	
8966500		1.0000E+00							
	Ra-228			activity mBq	activity mCi	activity Ci	SNM	source	
19750		3.587E-001	5.0879E-01	1.6880E-01	4.5621E-03	4.5621E-06	grams	kg	0.705
grams							1.6897E-08	1.6897E-11	
8966500		2.7000E+02							
	TH-227			activity mBq	activity mCi	activity Ci	SNM	source	
19750		6.189E-002	6.189E-002	2.0533E-02	5.5494E-04	5.5494E-07	grams	kg	
grams							1.7901E-11	1.7901E-14	
8966500		3.1000E+04							
	Th-228			activity mBq	activity mCi	activity Ci	SNM	source	
19750		3.246E-001	5.8623E-01	1.9449E-01	5.2564E-03	5.2564E-06	grams	kg	
grams							6.4103E-09	6.4103E-12	0.55371
8966500		8.2000E+02							
	Th-230			activity mBq	activity mCi	activity Ci	SNM	source	
19750		3.587E-001	2.6616E-01	8.8300E-02	2.3865E-03	2.3865E-06	grams	kg	
grams							1.1364E-04	1.1364E-07	1.34771
8966500		2.1000E-02							
	TH-232			activity mBq	activity mCi	activity Ci	SNM	source	
19750		3.587E-001	5.0879E-01	1.6880E-01	4.5621E-03	4.5621E-06	grams	kg	0.705
grams							4.1474E+01	4.1474E-02	
8966500		1.1000E-07							
	U-234			activity mBq	activity mCi	activity Ci	SNM	source	
19750		4.749E+000	4.2171E+00	1.3991E+00	3.7813E-02	3.7813E-05	grams	kg	1.12613
grams							6.0988E-03	6.0988E-06	
8966500		6.2000E-03							
	U-235			activity mBq	activity mCi	activity Ci	SNM	source	
19750		3.348E-001	4.2868E-01	1.4222E-01	3.8438E-03	3.8438E-06	grams	kg	0.781
grams							1.7472E+00	1.7472E-03	
8966500		2.2000E-06							
	U-238			activity mBq	activity mCi	activity Ci	SNM	source	
19750		4.749E+000	6.4089E+00	2.1262E+00	5.7465E-02	5.7465E-05	grams	kg	0.741
grams							1.6902E+02	1.6902E-01	
8966500		3.4000E-07							

Totals for all flag 1 data

			corrected	activity mBq	activity mCi	activity Ci	SNM	source	
19750		1.1917E+01	1.3469E+01	4.4891E+00	1.2133E-01	1.2133E-04	grams	kg	flag1 data
			pCi/g	541 will be < than the 540 (MDA not added)			1.7472E+00	2.1050E-01	
156.7460317				data for NORM					
	U-nat		corrected pCi/g	activity mBq	activity mCi	activity Ci		source	
		5.0838E+00	6.8376E+00	2.2684E+00	6.1309E-02	6.1309E-05		kg	
								8.6351E-02	
		7.1000E-07							

	U-nat		corrected pCi/g	activity mBq	activity mCi	activity Ci		source	
		1.1917E+01	1.3469E+01	4.4891E+00	1.2133E-01	1.2133E-04		kg total	norm data
								1.2783E-01	

X

Posillico Bros. Asphalt Co.

1610 New Highway, Farmingdale, N.Y. 11735
Plant Tele: 293-2620, 2621

HOT STORAGE

16:25 4-18-05 TICKET NUMBER 9220

19950 lb GROSS

Posillico Bros. Asphalt Co.

1610 New Highway, Farmingdale, N.Y. 11735
Plant Tele: 293-2620, 2621

HOT STORAGE

8:00 9-13-04 TICKET NUMBER 9120

14460 lb GROSS

Posillico Bros. Asphalt Co.

1610 New Highway, Farmingdale, N.Y. 11735
Plant Tele: 293-2620, 2621

HOT STORAGE

12:52 10-01-04 TICKET NUMBER 9121

10830 lb GROSS

Posillico Bros. Asphalt Co.

1610 New Highway, Farmingdale, N.Y. 11735
Plant Tele: 293-2620, 2621

HOT STORAGE

9:32 9-17-04 TICKET NUMBER 9123

18700 lb GROSS

Posillico Bros. Asphalt Co.

1610 New Highway, Farmingdale, N.Y. 11735
Plant Tele: 293-2620, 2621

HOT STORAGE

8:18 9-13-04 TICKET NUMBER 9124

16850 lb GROSS

Posillico Bros. Asphalt Co.

1610 New Highway, Farmingdale, N.Y. 11735
Plant Tele: 293-2620, 2621

HOT STORAGE

15:15 10-05-04 TICKET NUMBER 9126

22120 lb GROSS

Posillico Bros. Asphalt Co.

1610 New Highway, Farmingdale, N.Y. 11735
Plant Tele: 293-2620, 2621

HOT STORAGE

13:13 10-01-04 TICKET NUMBER 9128

13650 lb GROSS

Posillico Bros. Asphalt Co.

1610 New Highway, Farmingdale, N.Y. 11735
Plant Tele: 293-2620, 2621

HOT STORAGE

15:05 10-05-04 TICKET NUMBER 9131

19830 lb GROSS

Posillico Bros. Asphalt Co.

1610 New Highway, Farmingdale, N.Y. 11735
Plant Tele: 293-2620, 2621

HOT STORAGE

13:22 10-01-04 TICKET NUMBER 9132

19460 lb GROSS

Posillico Bros. Asphalt Co.

1610 New Highway, Farmingdale, N.Y. 11735
Plant Tele: 293-2620, 2621

HOT STORAGE

15:03 10-05-04 TICKET NUMBER 9137

22600 lb GROSS

Posillico Bros. Asphalt Co.

1610 New Highway, Farmingdale, N.Y. 11735
Plant Tele: 293-2620, 2621

HOT STORAGE

15:37 10-05-04 TICKET NUMBER 9141

11800 lb GROSS

FORM 540 — **Envirocare of Utah, Inc.**

UNIFORM LOW-LEVEL RADIOACTIVE WASTE MANIFEST

SHIPPING PAPER

1. EMERGENCY TELEPHONE NUMBER (Include Area Code): 1-800-424-9300

ORGANIZATION: Chemtrec

2. IS THIS AN "EXCLUSIVE USE" SHIPMENT? ☐ YES ☑ NO

3. TOTAL NUMBER OF PACKAGES IDENTIFIED ON THIS MANIFEST ==> 11

4. DOES EPA REGULATED WASTE REQUIRING A MANIFEST ACCOMPANY THIS SHIPMENT? ☐ YES ☑ NO
If "Yes," provide Manifest Number ==>

EPA MANIFEST NUMBER

5. SHIPPER – NAME AND FACILITY
GTEOSI
140 Cantague Rock RD
Hicksville, NY 11801

Utah Generator Site Access Permit No.: 020 500 1352

SHIPMENT NUMBER: NHRX-1094

CONTACT: Jean Agostinelli

6. CARRIER – Name and Address
Priority Transport Services, Inc.
391 Anthony Street
Schenectady, NY 12308

CONTACT: Dispatch

SIGNATURE – Authorized carrier acknowledging waste receipt

SHIPPER I.D NUMBER: 0840-01-981

☐ COLLECTOR
☐ PROCESSOR
☑ GENERATOR TYPE (Specify) I

TELEPHONE NUMBER (Include Area Code): 516-932-9157

EPA I.D. NUMBER: NYR000104876

SHIPPING DATE: 05/19/2005

TELEPHONE (Include Area Code): 800-235-8068

DATE: 5-19-05

7. FORM 540 AND 540A — PAGE 1 OF 3 PAGE(S)
FORM 541 AND 541A — 6 PAGE(S)
FORM 542 AND 542A — None PAGE(S)
ADDITIONAL INFORMATION — None PAGE(S)

8. MANIFEST NUMBER (Use this number on all continuation pages): 0840-01-981

9. CONSIGNEE - Name and Facility
Envirocare of Utah, Inc.
Clive Disposal Site (Bulk Waste Facility)
Interstate 80, Exit 49
Clive, UT 84029

L84922

CONTACT: Shipping and Receiving

TELEPHONE (Include Area Code): (435)884-0155

SIGNATURE – Authorized consignee acknowledging waste receipt

DATE: 6-3-05

10. CERTIFICATION

This is to certify that the herein-named materials are properly classified, described, packaged, marked, and labeled and are in proper condition for transportation according to the applicable regulations of the Department of Transportation. This also certifies that the materials are classified, packaged, marked, and labeled and are in proper condition for transportation and disposal as described in accordance with the requirements of 10 CFR Parts 20 and 61, or equivalent state regulations.

AUTHORIZED SIGNATURE | TITLE: Broker | DATE: 5-19-05

11. U.S DEPARTMENT OF TRANSPORTATION DESCRIPTION (Including proper shipping name, hazard class, UN ID number, and any additional information)	12 DOT LABEL "RADIOACTIVE"	13 TRANSPORT INDEX	14 PHYSICAL AND CHEMICAL FORM	15 INDIVIDUAL RADIONUCLIDES	16 TOTAL PACKAGE ACTIVITY MBq	mCi	17 LSA/SCO CLASS	18 TOTAL WEIGHT OR VOLUME (Use appropriate units)	19 IDENTIFICATION NUMBER OF PACKAGE
Soil,DOT Non-Regulated, containing Radionuclides	NA	NA	Solid / OXIDES	Ac-227 Pa-231 Ra-223 Ra-226 Ra-228 Th-227 Th-228 Th-230	3.7583E+00	1.0158E-01	NA	18150 LBS; 143.41 FT3	9142
				Th-232 U-234 U-Nat					
Soil,DOT Non-Regulated, containing Radionuclides	NA	NA	Solid / OXIDES	Ac-227 Pa-231 Ra-223 Ra-226 Ra-228 Th-227 Th-228 Th-230	4.2030E+01	1.1360E+00	NA	12120 LBS; 95.56 FT3	9149
				Th-232 U-234 U-Nat					
Soil,DOT Non-Regulated, containing Radionuclides	NA	NA	Solid / OXIDES	Ac-227 Pa-231 Ra-223 Ra-226 Ra-228 Th-227 Th-228 Th-230	1.2731E+00	3.4408E-02	NA	20140 LBS; 159.21 FT3	9150
				Th-232 U-234 U-Nat					

FOR CONSIGNEE USE ONLY

___ Record Waste Description Inadequate
___ Contamination or Leakage Detected
___ Unexpected Exposure Rates Detected
___ Labels, Markings, etc. Inadequate
___ Container Integrity Inadequate
___ Other
✓ No Violations Detected on this Shipment

20. TERMS AND CONDITIONS

A. HAZARDOUS MATERIALS: Generator represents & warrants that Waste Material __ is (or) ✓ is not a hazardous waste as defined in 40 CFR 261. Where the material is a hazardous waste, this shipment is also accompanied by a separate and completed hazardous waste manifest, along with the appropriate land-disposal restriction notice and/or certification as required by 40 CFR 268.1

B. TITLE: Upon acceptance at the disposal site by Envirocare of Utah, Inc., and all appropriate regulatory authorities, title to the Waste Material which conforms to Generator's representations herein shall thereupon transfer from Generator and be vested in Envirocare of Utah, Inc.

C. WASTE MATERIAL: Generator represents and warrants that all data set forth in this (UNIFORM LOW-LEVEL RADIOACTIVE WASTE MANIFEST) are true and correct in all respects and in accordance with all applicable governmental laws, rules, regulations and Envirocare of Utah Inc.'s facility license.

D. INDEMNIFICATION: Generator agrees to indemnify Envirocare of Utah, Inc., its officers, employees and agents against all losses and liability whatsoever if such losses or liability results from the failure of the Waste Material to conform in all material respects to the data supplied on the (UNIFORM LOW-LEVEL RADIOACTIVE WASTE MANIFEST.) or if this shipment fails to meet the standards prescribed by the Department of Transportation or any governmental agency having jurisdiction over such matters.

FORM 540 (04-03)

FORM 540 — **Envirocare of Utah, Inc.**

UNIFORM LOW-LEVEL RADIOACTIVE WASTE MANIFEST

SHIPPING PAPER

1. EMERGENCY TELEPHONE NUMBER (Include Area Code): 1-800-424-9300

ORGANIZATION: Chemtrec

2. IS THIS AN "EXCLUSIVE USE" SHIPMENT? ☐ YES ☑ NO

3. TOTAL NUMBER OF PACKAGES IDENTIFIED ON THIS MANIFEST =====> 11

4. DOES EPA REGULATED WASTE REQUIRING A MANIFEST ACCOMPANY THIS SHIPMENT? ☐ YES ☑ NO
If "Yes," provide Manifest Number =====>

EPA MANIFEST NUMBER

5. SHIPPER -- NAME AND FACILITY
GTEOSI
140 Cantiague Rock RD
Hicksville, NY 11801

SHIPPER I.D. NUMBER: 0840-01-981
☐ COLLECTOR
☐ PROCESSOR
☑ GENERATOR TYPE (Specify) I

Utah Generator Site Access Permit No.: 020 500 1352
SHIPMENT NUMBER: NHRX-1004

CONTACT: Jean Agostinelli
TELEPHONE NUMBER (Include Area Code): 516-932-9157

6. CARRIER -- Name and Address
Priority Transport Services, Inc.
391 Anthony Street
Schenectady, NY 12308

EPA I.D. NUMBER: NYR000104976
SHIPPING DATE: 05/19/2005

CONTACT: Dispatch
TELEPHONE (Include Area Code): 800-235-0069

SIGNATURE -- *Authorized carrier acknowledging waste receipt*
DATE: 5-19-05

7. FORM 540 AND 540A — PAGE 1 OF 3 PAGE(S)
FORM 541 AND 541A — 6 PAGE(S)
FORM 542 AND 542A — None PAGE(S)
ADDITIONAL INFORMATION — None PAGE(S)

8. MANIFEST NUMBER (Use this number on all continuation pages): 0840-01-981

9. CONSIGNEE - Name and Facility
Envirocare of Utah, Inc.
Clive Disposal Site (Bulk Waste Facility)
Interstate 80, Exit 49
Clive, UT 84029

CONTACT: Shipping and Receiving
TELEPHONE (Include Area Code): (435)884-0155

SIGNATURE -- *Authorized consignee acknowledging waste receipt*
DATE

10. CERTIFICATION
This is to certify that the herein-named materials are properly classified, described, packaged, marked, and labeled and are in proper condition for transportation according to the applicable regulations of the Department of Transportation. This also certifies that the materials are classified, packaged, marked, and labeled and are in proper condition for transportation and disposal as described in accordance with the requirements of 10 CFR Parts 20 and 61, or equivalent state regulations.

AUTHORIZED SIGNATURE: [signature] TITLE: Broker DATE: 5-19-05

11. U.S. DEPARTMENT OF TRANSPORTATION DESCRIPTION (Including proper shipping name, hazard class, UN ID number, and any additional information)	12. DOT LABEL "RADIOACTIVE"	13. TRANSPORT INDEX	14. PHYSICAL AND CHEMICAL FORM	15. INDIVIDUAL RADIONUCLIDES	16. TOTAL PACKAGE ACTIVITY MBq	mCi	17. LSA/SCO CLASS	18. TOTAL WEIGHT OR VOLUME (Use appropriate units)	19. IDENTIFICATION NUMBER OF PACKAGE
Soil,DOT Non-Regulated, containing Radionuclides	NA	NA	Solid / OXIDES	Ac-227 Pa-231 Ra-223 Ra-226 Ra-228 Th-227 Th-228 Th-230 Th-232 U-234 U-Nat	3.7583E+00	1.0158E-01	NA	18150 LBS; 143.41 FT3	9142
Soil,DOT Non-Regulated, containing Radionuclides	NA	NA	Solid / OXIDES	Ac-227 Pa-231 Ra-223 Ra-226 Ra-228 Th-227 Th-228 Th-230 Th-232 U-234 U-Nat	4.2030E+01	1.1360E+00	NA	12120 LBS; 95.56 FT3	9149
Soil,DOT Non-Regulated, containing Radionuclides	NA	NA	Solid / OXIDES	Ac-227 Pa-231 Ra-223 Ra-226 Ra-228 Th-227 Th-228 Th-230 Th-232 U-234 U-Nat	1.2731E+00	3.4408E-02	NA	20140 LBS; 159.21 FT3	9150

FOR CONSIGNEE USE ONLY

____ Record Waste Description Inadequate
____ Contamination or Leakage Detected
____ Unexpected Exposure Rates Detected
____ Labels, Markings, etc. Inadequate
____ Container Integrity Inadequate
____ Other
____ No Violations Detected on this Shipment

20. TERMS AND CONDITIONS

A. HAZARDOUS MATERIALS: Generator represents & warrants that Waste Material __ is (or) ✓ is not a hazardous waste as defined in 40 CFR 261. Where the material is a hazardous waste, this shipment is also accompanied by a separate and completed hazardous waste manifest, along with the appropriate land-disposal restriction notice and/or certification as required by 40 CFR 268.1.

B. TITLE: Upon acceptance at the disposal site by Envirocare of Utah, Inc., and all appropriate regulatory authorities, title to the Waste Material which conforms to Generator's representations herein shall thereupon transfer from Generator and be vested in Envirocare of Utah, Inc.

C. WASTE MATERIAL: Generator represents and warrants that all data set forth in this (UNIFORM LOW-LEVEL RADIOACTIVE WASTE MANIFEST) are true and correct in all respects and in accordance with all applicable governmental laws, rules, regulations and Envirocare of Utah Inc.'s facility license.

D. INDEMNIFICATION: Generator agrees to indemnify Envirocare of Utah, Inc., its officers, employees and agents against all losses and liability whatsoever if such losses or liability results from the failure of the Waste Material to conform in all material respects to the data supplied on the (UNIFORM LOW-LEVEL RADIOACTIVE WASTE MANIFEST,) or if this shipment fails to meet the standards prescribed by the Department of Transportation or any governmental agency having jurisdiction over such matters.

FORM 540A

Envirocare of Utah, Inc.

UNIFORM LOW-LEVEL RADIOACTIVE WASTE MANIFEST

SHIPPING PAPER (CONTINUATION)

8. MANIFEST NUMBER
(Use this number on all continuation pages)
0840-01-981

11. U.S. DEPARTMENT OF TRANSPORTATION DESCRIPTION (Including proper shipping name, hazard class, UN ID number, and any additional information)	12. DOT LABEL "RADIOACTIVE"	13. TRANSPORT INDEX	14. PHYSICAL AND CHEMICAL FORM	15. INDIVIDUAL RADIONUCLIDES				16. TOTAL PACKAGE ACTIVITY MBq	mCi	17. LSA/SCO CLASS	18. TOTAL WEIGHT OR VOLUME (Use appropriate units)	19. IDENTIFICATION NUMBER OF PACKAGE
Soil,DOT Non-Regulated, containing Radionuclides	NA	NA	Solid / OXIDES	Ac-227	Pa-231	Ra-223	Ra-226	1.6598E+00	4.4858E-02	NA	18930 LBS; 149.6 FT3	9159
				Ra-228	Th-227	Th-228	Th-230					
				Th-232	U-234	U-Nat						
Soil,DOT Non-Regulated, containing Radionuclides	NA	NA	Solid / OXIDES	Ac-227	Pa-231	Ra-223	Ra-226	1.9512E+00	5.2736E-02	NA	17040 LBS; 134.6 FT3	9160
				Ra-228	Th-227	Th-228	Th-230					
				Th-232	U-234	U-Nat						
Soil,DOT Non-Regulated, containing Radionuclides	NA	NA	Solid / OXIDES	Ac-227	Pa-231	Ra-223	Ra-226	7.6950E-01	2.0797E-02	NA	19550 LBS; 154.52 FT3	9161
				Ra-228	Th-227	Th-228	Th-230					
				Th-232	U-234	U-Nat						
Soil,DOT Non-Regulated, containing Radionuclides	NA	NA	Solid / OXIDES	Ac-227	Pa-231	Ra-223	Ra-226	1.1379E+00	3.0755E-02	NA	20880 LBS; 165.08 FT3	9162
				Ra-228	Th-227	Th-228	Th-230					
				Th-232	U-234	U-Nat						
Soil,DOT Non-Regulated, containing Radionuclides	NA	NA	Solid / OXIDES	Ac-227	Pa-231	Ra-223	Ra-226	1.6416E+01	4.4367E-01	NA	20720 LBS; 163.81 FT3	9167
				Ra-228	Th-227	Th-228	Th-230					
				Th-232	U-234	U-Nat						
Soil,DOT Non-Regulated, containing Radionuclides	NA	NA	Solid / OXIDES	Ac-227	Pa-231	Ra-223	Ra-226	1.6905E+01	4.5689E-01	NA	22420 LBS; 177.3 FT3	9168
				Ra-228	Th-227	Th-228	Th-230					
				Th-232	U-234	U-Nat						
Soil,DOT Non-Regulated, containing Radionuclides	NA	NA	Solid / OXIDES	Ac-227	Pa-231	Ra-223	Ra-226	1.5690E+00	4.2406E-02	NA	11730 LBS; 92.46 FT3	9193
				Ra-228	Th-227	Th-228	Th-230					

FORM 540A

Envirocare of Utah, Inc.

UNIFORM LOW-LEVEL RADIOACTIVE WASTE MANIFEST

SHIPPING PAPER (CONTINUATION)

8. MANIFEST NUMBER
(Use this number on all continuation pages)
0840-01-981

11. U.S. DEPARTMENT OF TRANSPORTATION DESCRIPTION (Including proper shipping name, hazard class, UN ID number, and any additional information)	12. DOT LABEL "RADIOACTIVE"	13. TRANSPORT INDEX	14. PHYSICAL AND CHEMICAL FORM	15. INDIVIDUAL RADIONUCLIDES				16. TOTAL PACKAGE ACTIVITY MBq	mCi	17. LSA/SCO CLASS	18. TOTAL WEIGHT OR VOLUME (Use appropriate units)	19. IDENTIFICATION NUMBER OF PACKAGE
Soil,DOT Non-Regulated, containing Radionuclides	NA	NA	Solid / OXIDES	Th-232	U-234	U-Nat		1.5690E+00	4.2406E-02	NA	11730 LBS; 92.46 FT3	9193
Soil,DOT Non-Regulated, containing Radionuclides	NA	NA	Solid / OXIDES	Ac-227	Pa-231	Ra-223	Ra-226	1.4010E+00	3.7864E-02	NA	17110 LBS; 135.16 FT3	9224
				Ra-228	Th-227	Th-228	Th-230					
				Th-232	U-234	U-Nat						

FORM 541

Envirocare of Utah, Inc.

UNIFORM LOW-LEVEL RADIOACTIVE WASTE MANIFEST

CONTAINER AND WASTE DESCRIPTION

Additional Nuclear Regulatory Commission (NRC) Requirements for Control, Transfer and Disposal of Radioactive Waste

1. MANIFEST TOTALS

NUMBER OF PACKAGES/ DISPOSAL CONTAINERS	NET WASTE VOLUME	NET WASTE WEIGHT	SPECIAL NUCLEAR MATERIAL (grams) U-233	U-235	Pu	Total
11	m3 44.4775 ft3 1570.7100	kg 89770.4718 ton 98.9550	NP	NP	NP	NP

ACTIVITY	ALL NUCLIDES	TRITIUM	C-14	Tc-99	I-129	SOURCE (kg)	
MBq	8.8236E+01	NP	NP	NP	NP	(kg)	2.3850E+00
mCi	2.3847E+00	NP	NP	NP	NP	(tons)	2.6290E-03

2. MANIFEST NUMBER 0840-01-981

3. PAGE 1 OF 6 PAGE(S)

4. SHIPPER NAME GTEOSI

SHIPMENT ID NUMBER 0840-01-981

5. CONTAINER IDENTIFICATION NUMBER/ GENERATOR ID NUMBER(S)	6. CONTAINER DESCRIPTION (See Note 1 & Note 1A)	7. VOLUME (m3) (ft3)	8. WASTE AND CONTAINER WEIGHT (kg) (ton)	9. SURFACE RADIATION LEVEL (mSv/hr) (mrem/hr)	10. SURFACE CONTAMINATION (MBq/100 cm2) (dpm/100cm2) ALPHA	BETA-GAMMA	11. WASTE DESCRIPTOR (See Note 2 & Note 2A)	12. APPROXIMATE WASTE VOLUME(S) IN CONTAINER (m3) (FT3)	13. SOLIDIFICATION OR STABILIZATION MEDIA (See Note 3)	14. CHEMICAL DESCRIPTION: CHEMICAL FORM/ CHELATING AGENT	WEIGHT % CHELATING AGENT IF > 0.1%	15. RADIOLOGICAL DESCRIPTION: RADIONUCLIDES		pCi/gm	MBq	mCi	16. WASTE CLASSIFICATION AS-Class A Stable AU-Class A Unstable B-Class B C-Class C
9142/GTEOSI	19 Strong Tight Container Loaded in Gondola	4.0609	8232.7021	0.0001	<3.6740E-06	<3.6740E-05	22,59-CONCRETE,59 -MISC DEBRIS-HJ	4.0609	100	OXIDES/NONE	0.00	Ac-227		5.93800E-02	(1.8024E-02)	(4.8714E-04)	AU
		143.4100	9.0750	0.0100	<2.2000E+02	<2.2000E+03		143.4100				Pa-231		2.03700E-01	6.1831E-02	1.6711E-03	
												Ra-223		8.02400E-02	2.4356E-02	6.5827E-04	
												Ra-226		2.28254E-01	6.9286E-02	1.8726E-03	
												Ra-228		7.48794E-01	2.2729E-01	6.1429E-03	
												Th-227	[1.5714E-14 kg]	5.93800E-02	(1.8024E-02)	(4.8714E-04)	
												Th-228	[8.6168E-12 kg]	8.61281E-01	2.6143E-01	7.0658E-03	
												Th-230	[1.5302E-07 kg]	3.91701E-01	1.1890E-01	3.2134E-03	
												Th-232	[5.5845E-02 kg]	7.48794E-01	2.2729E-01	6.1429E-03	
												U-234	[4.5484E-06 kg]	3.43744E+00	1.0434E+00	2.8200E-02	
												U-Nat	[6.4275E-02 kg]	5.56269E+00	1.6885E+00	4.5635E-02	
												Subtotal			3.7223E+00	1.0060E-01	
												Total			3.7223E+00	1.0060E-01	
												Source	[1.2012E-01 kg]				
9149/GTEOSI	19 Strong Tight Container Loaded in Gondola	2.7060	5497.5399	0.0001	<3.6740E-06	<3.6740E-05	22,59-CONCRETE,59 -MISC DEBRIS-HJ	2.7060	100	OXIDES/NONE	0.00	Ac-227		1.09700E-01	(2.2187E-02)	(5.9964E-04)	AU
		95.5600	6.0600	0.0100	<2.2000E+02	<2.2000E+03		95.5600				Pa-231		1.15900E+00	2.3441E-01	6.3353E-03	
												Ra-223		9.88200E-02	(1.9986E-02)	(5.4017E-04)	
												Ra-226		2.43137E-01	4.9173E-02	1.3290E-03	
												Ra-228		1.40156E+00	2.8346E-01	7.6612E-03	
												Th-227	[1.9343E-14 kg]	1.09700E-01	(2.2187E-02)	(5.9964E-04)	
												Th-228	[9.1447E-12 kg]	1.37184E+00	2.7745E-01	7.4987E-03	
												Th-230	[1.9084E-07 kg]	7.33170E-01	1.4828E-01	4.0076E-03	
												Th-232	[6.9647E-02 kg]	1.40156E+00	2.8346E-01	7.6612E-03	

Note 1: Container Description Codes. For containers/ waste requiring disposal in approved structural over-packs the numerical code must be followed by "-OP."

1. Wooden Box or Crate
2. Metal Box
3. Plastic Drum or Pail
4. Metal Drum or Pail
5. Metal Tank or Liner
6. Concrete Tank or Liner
7. Polyethlene Tank or Liner
8. Fiberglass Tank or Liner
9. Demineralizer
10. Gas Cylinder
11. Bulk, Unpackaged Waste
12. Unpackaged Components
13. High Integrity Container
19. Other. Describe in Item 6, or additional page

Note 1A: Bulk Packaging Description Codes. (Choose one code as may be applicable.)

A Gondola
B Intermodal
C End-Dump
D Roll-off
E Seavan

NOTE 2: Waste Descriptor Codes. (Choose up to three which predominate by volume.)

20. Charcoal
21. Incinerator Ash
22. Soil
23. Gas
24. Oil
25. Aqueous Liquid
26. Filter Media
27. Mechanical Filter
28. EPA or State Hazardous
29. Demolition Rubble
30. Cation Ion-exchange Media
31. Anion Ion-exchange Media
32. Mixed Bed Ion-exchange Media
33. Contaminated Equipment
34. Organic Liquid (except oil)
35. Glassware or Labware
36. Sealed Source/Device
37. Paint or Plating
38. Evaporator Bottoms/Sludges/ Concentrates
39. Compactible Trash
40. Noncompactible Trash
41. Animal Carcass
42. Biological Material (except animal carcass)
43. Activated Material
59. Other. Describe in item 11, or additional page

NOTE 2A: Specific Waste Descriptions (Choose all applicable codes.)

G Dewatered
H Solid
I Combustible
J Non-combustible
K Air Filtration Filters
L Asbestos

Note3: Solidification and Stabilization Media Codes. (Choose up to three which predominate by volume.) For media meeting disposal site structural stability requirements, the numerical code must be followed by "-S." and the media vendor and brand name must also be identified in Item 13. Code 100=NONE REQUIRED.

Solidification

90. Cement
91. Concrete (encapsulation)
92. Bitumen
93. Vinyl Chloride
94. Vinyl Ester Styrene
99. Other. Describe in item 13, or additional page
100. None Required.

FORM 541A

UNIFORM LOW-LEVEL RADIOACTIVE WASTE MANIFEST

CONTAINER AND WASTE DESCRIPTION (CONTINUATION)

Envirocare of Utah, Inc.

2. MANIFEST NUMBER 0840-01-981

DISPOSAL CONTAINER DESCRIPTION							WASTE DESCRIPTION FOR EACH WASTE TYPE IN CONTAINER									
							PHYSICAL DESCRIPTION			14. CHEMICAL DESCRIPTION		15. RADIOLOGICAL DESCRIPTION				16. WASTE CLASSIFICATION AS-Class A Stable AU-Class A Unstable B-Class B C-Class C
5. CONTAINER IDENTIFICATION NUMBER/ GENERATOR ID NUMBER(S)	6. CONTAINER DESCRIPTION (See Note 1 & Note 1A)	7. VOLUME (m3)/(ft3)	8. WASTE AND CONTAINER WEIGHT (kg)/(lon)	9. SURFACE RADIATION LEVEL (mSv/hr)/(mrem/hr)	10. SURFACE CONTAMINATION (MBq/100 cm2)/(dpm/100cm2) ALPHA	BETA-GAMMA	11. WASTE DESCRIPTOR (See Note 2 & Note 2A)	12. APPROXIMATE WASTE VOLUME(S) IN CONTAINER (m3)/(FT3)	13. SOLIDIFICATION OR STABILIZATION MEDIA (See Note 3)	CHEMICAL FORM/ CHELATING AGENT	WEIGHT % CHELATING AGENT IF > 0.1%	INDIVIDUAL RADIONUCLIDES AND ACTIVITY (MBq) AND CONTAINER TOTAL; OR CONTAINER TOTAL ACTIVITY AND RADIONUCLIDE PERCENT: RADIONUCLIDES	pCi/gm	MBq	mCi	
												U-234 [6.8307E-05 kg]	7.74777E+01	1.5670E+01	4.2351E-01	
												U-Nat [9.5241E-01 kg]	1.23709E+02	2.5020E+01	6.7621E-01	
												Subtotal		4.1966E+01	1.1342E+00	
												Total		4.1966E+01	1.1342E+00	
												Source [1.0221E+00 kg]				
9150/GTEOSI	19 Strong Tight Container Loaded in Gondola	4.5083	9135.3509	0.0001	<3.6740E-06	<3.6740E-05	22,59-CONCRETE,59 -MISC DEBRIS-HJ	4.5083	100	OXIDES/NONE	0.00	Ac-227	1.23100E-01	4.1481E-02	1.1211E-03	AU
												Pa-231	3.22800E-01	1.0877E-01	2.9398E-03	
												Ra-223	5.08700E-02	(1.7142E-02)	(4.6329E-04)	
		159.2100	10.0700	0.0100	<2.2000E+02	<2.2000E+03		159.2100				Ra-226	1.50427E-01	5.0690E-02	1.3700E-03	
												Ra-228	3.54752E-01	1.1954E-01	3.2308E-03	
												Th-227 [3.6165E-14 kg]	1.23100E-01	4.1481E-02	1.1211E-03	
												Th-228 [4.8541E-12 kg]	4.37052E-01	1.4727E-01	3.9803E-03	
												Th-230 [8.0479E-08 kg]	1.85574E-01	6.2534E-02	1.6901E-03	
												Th-232 [2.9371E-02 kg]	3.54752E-01	1.1954E-01	3.2308E-03	
												U-234 [8.1889E-07 kg]	5.57484E-01	1.8785E-01	5.0771E-03	
												U-Nat [1.4343E-02 kg]	1.11817E+00	3.7677E-01	1.0183E-02	
												Subtotal		1.2559E+00	3.3944E-02	
												Total		1.2559E+00	3.3944E-02	
												Source [4.3715E-02 kg]				
9159/GTEOSI	19 Strong Tight Container Loaded in Gondola	4.2362	8586.5041	0.0001	<3.6740E-06	<3.6740E-05	22,59-CONCRETE,59 -MISC DEBRIS-HJ	4.2362	100	OXIDES/NONE	0.00	Ac-227	3.86300E-02	(1.2232E-02)	(3.3059E-04)	AU
												Pa-231	2.42400E-01	(7.6753E-02)	(2.0744E-03)	
												Ra-223	4.65300E-02	(1.4733E-02)	(3.9820E-04)	
		149.6000	9.4650	0.0100	<2.2000E+02	<2.2000E+03		149.6000				Ra-226	2.23463E-01	7.0759E-02	1.9124E-03	
												Ra-228	5.29078E-01	1.6753E-01	4.5278E-03	
												Th-227 [1.0664E-14 kg]	3.86300E-02	(1.2232E-02)	(3.3059E-04)	
												Th-228 [6.6157E-12 kg]	6.33906E-01	2.0072E-01	5.4249E-03	
												Th-230 [1.1279E-07 kg]	2.76766E-01	8.7635E-02	2.3685E-03	
												Th-232 [4.1162E-02 kg]	5.29078E-01	1.6753E-01	4.5278E-03	
												U-234 [1.3091E-06 kg]	9.48381E-01	3.0030E-01	8.1162E-03	
												U-Nat [2.0911E-02 kg]	1.73489E+00	5.4934E-01	1.4847E-02	
												Subtotal		1.5438E+00	4.1725E-02	
												Total		1.5438E+00	4.1725E-02	

FORM 541A

UNIFORM LOW-LEVEL RADIOACTIVE WASTE MANIFEST

CONTAINER AND WASTE DESCRIPTION (CONTINUATION)

Envirocare of Utah, Inc.

2. MANIFEST NUMBER 0840-01-981

DISPOSAL CONTAINER DESCRIPTION							WASTE DESCRIPTION FOR EACH WASTE TYPE IN CONTAINER									
							PHYSICAL DESCRIPTION			14. CHEMICAL DESCRIPTION		15. RADIOLOGICAL DESCRIPTION				16. WASTE CLASSIFICATION AS-Class A Stable AU-Class A Unstable B-Class B C-Class C
5. CONTAINER IDENTIFICATION NUMBER/ GENERATOR ID NUMBER(S)	6. CONTAINER DESCRIPTION (See Note 1 & Note 1A)	7. VOLUME (m3) / (ft3)	8. WASTE AND CONTAINER WEIGHT (kg) / (ton)	9. SURFACE RADIATION LEVEL (mSv/hr) / (mrem/hr)	10. SURFACE CONTAMINATION (MBq/100 cm2) / (dpm/100cm2) ALPHA	BETA-GAMMA	11. WASTE DESCRIPTOR (See Note 2 & Note 2A)	12. APPROXIMATE WASTE VOLUME(S) IN CONTAINER (m3) / (FT3)	13. SOLIDIFICATION OR STABILIZATION MEDIA (See Note 3)	CHEMICAL FORM/ CHELATING AGENT	WEIGHT % CHELATING AGENT IF > 0.1%	INDIVIDUAL RADIONUCLIDES AND ACTIVITY (MBq) AND CONTAINER TOTAL; OR CONTAINER TOTAL ACTIVITY AND RADIONUCLIDE PERCENT: RADIONUCLIDES	pCi/gm	MBq	mCi	
												Source [6.2075E-02 kg]				
9160/GTEOSI	19 Strong Tight Container Loaded in Gondola	3.8114	7729.2145	0.0001	<3.6740E-06	<3.6740E-05	22,59-CONCRETE,59 -MISC DEBRIS-HJ	3.8114	100	OXIDES/NONE	0.00	Ac-227	4.30600E-02	(1.2268E-02)	(3.3156E-04)	AU
												Pa-231	3.06200E-01	8.7235E-02	2.3577E-03	
												Ra-223	3.78700E-02	(1.0789E-02)	(2.9159E-04)	
		134.6000	8.5200	0.0100	<2.2000E+02	<2.2000E+03		134.6000				Ra-226	1.87598E-01	5.3447E-02	1.4445E-03	
												Ra-228	5.28511E-01	1.5057E-01	4.0695E-03	
												Th-227 [1.0695E-14 kg]	4.30600E-02	(1.2268E-02)	(3.3156E-04)	
												Th-228 [6.1763E-12 kg]	6.57745E-01	1.8739E-01	5.0645E-03	
												Th-230 [1.0137E-07 kg]	2.76469E-01	7.8766E-02	2.1288E-03	
												Th-232 [3.6995E-02 kg]	5.28511E-01	1.5057E-01	4.0695E-03	
												U-234 [1.9796E-06 kg]	1.59395E+00	4.5410E-01	1.2273E-02	
												U-Nat [2.8695E-02 kg]	2.64596E+00	7.5384E-01	2.0374E-02	
												Subtotal		1.9159E+00	5.1782E-02	
												Total		1.9159E+00	5.1782E-02	
												Source [6.5692E-02 kg]				
9161/GTEOSI	19 Strong Tight Container Loaded in Gondola	4.3755	8867.7314	0.0001	<3.6740E-06	<3.6740E-05	22,59-CONCRETE,59 -MISC DEBRIS-HJ	4.3755	100	OXIDES/NONE	0.00	Ac-227	2.58500E-02	(8.4545E-03)	(2.2850E-04)	AU
												Pa-231	1.32000E-01	(4.3172E-02)	(1.1668E-03)	
												Ra-223	2.99300E-02	(9.7887E-03)	(2.6456E-04)	
		154.5200	9.7750	0.0080	<2.2000E+02	<2.2000E+03		154.5200				Ra-226	7.68834E-02	2.5145E-02	6.7960E-04	
												Ra-228	2.17589E-01	7.1166E-02	1.9234E-03	
												Th-227 [7.3709E-15 kg]	2.58500E-02	(8.4545E-03)	(2.2850E-04)	
												Th-228 [2.3888E-12 kg]	2.21596E-01	7.2476E-02	1.9588E-03	
												Th-230 [4.7911E-08 kg]	1.13823E-01	3.7226E-02	1.0061E-03	
												Th-232 [1.7485E-02 kg]	2.17589E-01	7.1166E-02	1.9234E-03	
												U-234 [6.5175E-07 kg]	4.57141E-01	1.4951E-01	4.0408E-03	
												U-Nat [1.0390E-02 kg]	8.34558E-01	2.7295E-01	7.3770E-03	
												Subtotal		6.9964E-01	1.8909E-02	
												Total		6.9964E-01	1.8909E-02	
												Source [2.7876E-02 kg]				

FORM 541A

UNIFORM LOW-LEVEL RADIOACTIVE WASTE MANIFEST

CONTAINER AND WASTE DESCRIPTION (CONTINUATION)

Envirocare of Utah, Inc.

2. MANIFEST NUMBER 0840-01-981

DISPOSAL CONTAINER DESCRIPTION							WASTE DESCRIPTION FOR EACH WASTE TYPE IN CONTAINER									
							PHYSICAL DESCRIPTION			14. CHEMICAL DESCRIPTION		15. RADIOLOGICAL DESCRIPTION				16. WASTE CLASSIFICATION AS-Class A Stable AU-Class A Unstable B-Class B C-Class C
5. CONTAINER IDENTIFICATION NUMBER/ GENERATOR ID NUMBER(S)	6. CONTAINER DESCRIPTION (See Note 1 & Note 1A)	7. VOLUME (m3) / (ft3)	8. WASTE AND CONTAINER WEIGHT (kg) / (ton)	9. SURFACE RADIATION LEVEL (mSv/hr) / (mrem/hr)	10. SURFACE CONTAMINATION (MBq/100 cm2) / (dpm/100cm2) ALPHA	BETA-GAMMA	11. WASTE DESCRIPTOR (See Note 2 & Note 2A)	12. APPROXIMATE WASTE VOLUME(S) IN CONTAINER (m3) / (FT3)	13. SOLIDIFICATION OR STABILIZATION MEDIA (See Note 3)	CHEMICAL FORM/ CHELATING AGENT	WEIGHT % CHELATING AGENT IF > 0.1%	INDIVIDUAL RADIONUCLIDES AND ACTIVITY (MBq) AND CONTAINER TOTAL; OR CONTAINER TOTAL ACTIVITY AND RADIONUCLIDE PERCENT: RADIONUCLIDES	pCi/gm	MBq	mCi	
9162/GTEOSI	19 Strong Tight Container Loaded in Gondola	4.6745	9471.0093	0.0001	<3.6740E-06	<3.6740E-05	22,59-CONCRETE,59 -MISC DEBRIS-HJ	4.6745	100	OXIDES/NONE	0.00	Ac-227	5.63900E-02	1.9703E-02	5.3250E-04	AU
												Pa-231	1.61100E-01	(5.6288E-02)	(1.5213E-03)	
												Ra-223	1.34400E-01	4.6960E-02	1.2692E-03	
		165.0800	10.4400	0.0080	<2.2000E+02	<2.2000E+03		165.0800				Ra-226	1.08537E-01	3.7921E-02	1.0249E-03	
												Ra-228	2.83830E-01	9.9171E-02	2.6803E-03	
												Th-227 [1.7178E-14 kg]	5.63900E-02	1.9703E-02	5.3250E-04	
												Th-228 [4.4570E-12 kg]	3.87026E-01	1.3523E-01	3.6548E-03	
												Th-230 [6.6765E-08 kg]	1.48474E-01	5.1878E-02	1.4021E-03	
												Th-232 [2.4366E-02 kg]	2.83830E-01	9.9171E-02	2.6803E-03	
												U-234 [9.1686E-07 kg]	6.01973E-01	2.1033E-01	5.6846E-03	
												U-Nat [1.3764E-02 kg]	1.03484E+00	3.6158E-01	9.7723E-03	
												Subtotal		1.0816E+00	2.9234E-02	
												Total		1.0816E+00	2.9234E-02	
												Source [3.8131E-02 kg]				
9167/GTEOSI	19 Strong Tight Container Loaded in Gondola	4.6386	9398.4345	0.0001	<3.6740E-06	<3.6740E-05	22,59-CONCRETE,59 -MISC DEBRIS-HJ	4.6386	100	OXIDES/NONE	0.00	Ac-227	5.83700E-02	2.0238E-02	5.4696E-04	AU
												Pa-231	3.88600E-01	1.3473E-01	3.6414E-03	
												Ra-223	4.12000E-02	(1.4285E-02)	(3.8607E-04)	
		163.8100	10.3600	0.0090	<2.2000E+02	<2.2000E+03		163.8100				Ra-226	3.20311E-01	1.1106E-01	3.0015E-03	
												Ra-228	1.23163E+00	4.2702E-01	1.1541E-02	
												Th-227 [1.7644E-14 kg]	5.83700E-02	2.0238E-02	5.4696E-04	
												Th-228 [1.8882E-11 kg]	1.65231E+00	5.7287E-01	1.5483E-02	
												Th-230 [2.8749E-07 kg]	6.44278E-01	2.2338E-01	6.0373E-03	
												Th-232 [1.0492E-01 kg]	1.23163E+00	4.2702E-01	1.1541E-02	
												U-234 [2.4171E-05 kg]	1.59928E+01	5.5448E+00	1.4986E-01	
												U-Nat [3.3955E-01 kg]	2.57275E+01	8.9200E+00	2.4108E-01	
												Subtotal		1.6401E+01	4.4328E-01	
												Total		1.6401E+01	4.4328E-01	
												Source [4.4449E-01 kg]				
9168/GTEOSI	19 Strong Tight Container Loaded in Gondola	5.0206	10169.5416	0.0001	<3.6740E-06	<3.6740E-05	22,59-CONCRETE,59 -MISC DEBRIS-HJ	5.0206	100	OXIDES/NONE	0.00	Ac-227	4.15400E-02	(1.5588E-02)	(4.2131E-04)	AU
												Pa-231	2.27900E-01	(8.5522E-02)	(2.3114E-03)	
												Ra-223	5.24800E-02	(1.9694E-02)	(5.3227E-04)	
		177.3000	11.2100	0.0100	<2.2000E+02	<2.2000E+03		177.3000				Ra-226	3.14286E-01	1.1794E-01	3.1876E-03	
												Ra-228	1.26071E+00	4.7312E-01	1.2787E-02	

FORM 541A

UNIFORM LOW-LEVEL RADIOACTIVE WASTE MANIFEST

CONTAINER AND WASTE DESCRIPTION (CONTINUATION)

Envirocare of Utah, Inc.

2. MANIFEST NUMBER 0840-01-981

DISPOSAL CONTAINER DESCRIPTION							WASTE DESCRIPTION FOR EACH WASTE TYPE IN CONTAINER									
							PHYSICAL DESCRIPTION			14. CHEMICAL DESCRIPTION		15. RADIOLOGICAL DESCRIPTION				16. WASTE CLASSIFICATION AS-Class A Stable AU-Class A Unstable B-Class B C-Class C
5. CONTAINER IDENTIFICATION NUMBER/ GENERATOR ID NUMBER(S)	6. CONTAINER DESCRIPTION (See Note 1 & Note 1A)	7. VOLUME (m3) / (ft3)	8. WASTE AND CONTAINER WEIGHT (kg) / (ton)	9. SURFACE RADIATION LEVEL (mSv/hr) / (mrem/hr)	10. SURFACE CONTAMINATION (MBq/100 cm2) / (dpm/100cm2) ALPHA	BETA-GAMMA	11. WASTE DESCRIPTOR (See Note 2 & Note 2A)	12. APPROXIMATE WASTE VOLUME(S) IN CONTAINER (m3) / (FT3)	13. SOLIDIFICATION OR STABILIZATION MEDIA (See Note 3)	CHEMICAL FORM/ CHELATING AGENT	WEIGHT % CHELATING AGENT IF > 0.1%	INDIVIDUAL RADIONUCLIDES AND ACTIVITY (MBq) AND CONTAINER TOTAL; OR CONTAINER TOTAL ACTIVITY AND RADIONUCLIDE PERCENT: RADIONUCLIDES	pCi/gm	MBq	mCi	
												Th-227 [1.3591E-14 kg]	4.15400E-02	(1.5588E-02)	(4.2131E-04)	
												Th-228 [1.9470E-11 kg]	1.57411E+00	5.9071E-01	1.5965E-02	
												Th-230 [3.1851E-07 kg]	6.59489E-01	2.4749E-01	6.6888E-03	
												Th-232 [1.1624E-01 kg]	1.26071E+00	4.7312E-01	1.2787E-02	
												U-234 [2.4986E-05 kg]	1.52735E+01	5.7317E+00	1.5491E-01	
												U-Nat [3.4771E-01 kg]	2.43409E+01	9.1346E+00	2.4688E-01	
												Subtotal		1.6769E+01	4.5321E-01	
												Total		1.6769E+01	4.5321E-01	
												Source [4.6398E-01 kg]				
9193/GTEOSI	19 Strong Tight Container Loaded in Gondola	2.6182	5320.6389	0.0001	<3.6740E-06	<3.6740E-05	22,59-CONCRETE,59 -MISC DEBRIS-HJ	2.6182	100	OXIDES/NONE	0.00	Ac-227	3.45800E-02	(6.7673E-03)	(1.8290E-04)	AU
												Pa-231	1.82300E-01	(3.5675E-02)	(9.6420E-04)	
												Ra-223	4.39400E-02	(8.5988E-03)	(2.3240E-04)	
		92.4600	5.8650	0.0050	<2.2000E+02	<2.2000E+03		92.4600				Ra-226	1.79540E-01	3.5135E-02	9.4960E-04	
												Ra-228	5.08511E-01	9.9515E-02	2.6896E-03	
												Th-227 [5.8999E-15 kg]	3.45800E-02	(6.7673E-03)	(1.8290E-04)	
												Th-228 [3.3887E-12 kg]	5.25365E-01	1.0281E-01	2.7787E-03	
												Th-230 [6.6997E-08 kg]	2.66007E-01	5.2055E-02	1.4069E-03	
												Th-232 [2.4451E-02 kg]	5.08511E-01	9.9515E-02	2.6896E-03	
												U-234 [1.8893E-06 kg]	2.21466E+00	4.3342E-01	1.1714E-02	
												U-Nat [2.6219E-02 kg]	3.51963E+00	6.8879E-01	1.8616E-02	
												Subtotal		1.5112E+00	4.0844E-02	
												Total		1.5112E+00	4.0844E-02	
												Source [5.0672E-02 kg]				
9224/GTEOSI	19 Strong Tight Container Loaded in Gondola	3.8273	7760.9660	0.0001	<3.6740E-06	<3.6740E-05	22,59-CONCRETE,59 -MISC DEBRIS-HJ	3.8273	100	OXIDES/NONE	0.00	Ac-227	3.30400E-02	(9.4517E-03)	(2.5545E-04)	AU
												Pa-231	2.96900E-01	8.4934E-02	2.2955E-03	
												Ra-223	4.60600E-02	(1.3176E-02)	(3.5612E-04)	
		135.1600	8.5550	0.0060	<2.2000E+02	<2.2000E+03		135.1600				Ra-226	1.45781E-01	4.1703E-02	1.1271E-03	
												Ra-228	3.60426E-01	1.0311E-01	2.7867E-03	
												Th-227 [8.2404E-15 kg]	3.30400E-02	(9.4517E-03)	(2.5545E-04)	
												Th-228 [3.6815E-12 kg]	3.90457E-01	1.1170E-01	3.0189E-03	
												Th-230 [6.9416E-08 kg]	1.88542E-01	5.3935E-02	1.4577E-03	
												Th-232 [2.5333E-02 kg]	3.60426E-01	1.0311E-01	2.7867E-03	

FORM 541A

UNIFORM LOW-LEVEL RADIOACTIVE WASTE MANIFEST

CONTAINER AND WASTE DESCRIPTION (CONTINUATION)

Envirocare of Utah, Inc.

2. MANIFEST NUMBER 0840-01-981

DISPOSAL CONTAINER DESCRIPTION							WASTE DESCRIPTION FOR EACH WASTE TYPE IN CONTAINER									
							PHYSICAL DESCRIPTION			14. CHEMICAL DESCRIPTION		15. RADIOLOGICAL DESCRIPTION				16. WASTE CLASSIFICATION AS-Class A Stable AU-Class A Unstable B-Class B C-Class C
5. CONTAINER IDENTIFICATION NUMBER/ GENERATOR ID NUMBER(S)	6. CONTAINER DESCRIPTION (See Note 1 & Note 1A)	7. VOLUME (m3) / (ft3)	8. WASTE AND CONTAINER WEIGHT (kg) / (ton)	9. SURFACE RADIATION LEVEL (mSv/hr) / (mrem/hr)	10. SURFACE CONTAMINATION (MBq/100 cm2) / (dpm/100cm2) ALPHA	BETA-GAMMA	11. WASTE DESCRIPTOR (See Note 2 & Note 2A)	12. APPROXIMATE WASTE VOLUME(S) IN CONTAINER (m3) / (FT3)	13. SOLIDIFICATION OR STABILIZATION MEDIA (See Note 3)	CHEMICAL FORM/ CHELATING AGENT	WEIGHT % CHELATING AGENT IF > 0.1%	INDIVIDUAL RADIONUCLIDES AND ACTIVITY (MBq) AND CONTAINER TOTAL; OR CONTAINER TOTAL ACTIVITY AND RADIONUCLIDE PERCENT: RADIONUCLIDES	pCi/gm	MBq	mCi	
												U-234 [1.4152E-06 kg]	1.13486E+00	3.2465E-01	8.7743E-03	
												U-Nat [2.0775E-02 kg]	1.90779E+00	5.4575E-01	1.4750E-02	
												Subtotal		1.3689E+00	3.6997E-02	
												Total		1.3689E+00	3.6997E-02	
												Source [4.6110E-02 kg]				
Shipment Totals		44.4775	90169.6332									Source [2.3850E+00 kg]		8.8236E+01	2.3847E+00	
		1570.7100	99.3950													

FORM 541A (04-03)

Envirocare of Utah, Inc.

ADDITIONAL NOTES

Manifest Number
0840-01-981
PAGE 1

New York State Waste Transporter Part 364 permit No. 4A-288
New York State Waste Transporter Part 381 permit Number 4A-288

UNIFORM LOW-LEVEL RADIOACTIVE WASTE MANIFEST
ISOTOPES REPORT

For Manifest # 0840-01-981
Envirocare of Utah, Inc.

	Total Activity		
Isotope	**(MBq)**	**(mCi)**	**(Ci)**
Ac-227	1.8639E-01	5.0376E-03	5.0376E-06
Pa-231	1.0093E+00	2.7279E-02	2.7279E-05
Ra-223	1.9951E-01	5.3921E-03	5.3921E-06
Ra-226	6.6225E-01	1.7899E-02	1.7899E-05
Ra-228	2.2215E+00	6.0040E-02	6.0040E-05
Th-227	1.8639E-01	5.0376E-03	5.0376E-06
Th-228	2.6601E+00	7.1894E-02	7.1894E-05
Th-230	1.1621E+00	3.1407E-02	3.1407E-05
Th-232	2.2215E+00	6.0040E-02	6.0040E-05
U-234	3.0050E+01	8.1216E-01	8.1216E-04
U-Nat	4.8312E+01	1.3057E+00	1.3057E-03

ENVIROCARE *OF UTAH, LLC.*

THE SAFE ALTERNATIVE

CERTIFICATE OF DISPOSAL

GTE Operations Support Inc., Irving

This Certificate acknowledges that the following manifested shipments:

Shipment	Disposal Location	Date	Shipment	Disposal Location	Date
0840-01-0977	Class A	06/10/05 11:58:51	0840-01-0981	Class A	06/10/05 11:34:19
0840-01-0982	Class A	06/10/05 11:58:51	0840-01-0983	Class A	06/10/05 11:34:19
0840-01-0984	Class A	06/10/05 10:04:57	0840-01-0985	Class A	06/10/05 10:04:57
0840-01-0986	Class A	06/10/05 11:34:19	0840-04-0029	Class A	06/10/05 11:58:51

Representing 9,190.86 cubic feet of waste has been disposed of at the above listed Disposal Facility. Disposal is subject to Envirocare's Radioactive Material License, all other applicable licenses, permits and regulations, and the Disposal Agreement.

Brent Anderson
Director of LLRW Operations

6/14/05
Date

605 N. 5600 W, Salt Lake City, Utah 84116 Telephone (801) 532-1330

Shipment Survey

Survey Number: GTEOSI-05-00326 Date: 4-18-05 Time: ~~15:35~~ 15:50 4-18-05

Waste Container Type: Super Sack Intermodal Other: soil

Waste Container ID #: 9224 Storage Bin: — Gross Weight: 17,110 lbs

	Ludlum 3030		Ludlum 3030		Ludlum 3030		L-19
Serial #	190646		196165		N		193615
Probe #	N/A		N/A				N/A
Calibration Due Date:	12-13-05		7-18-05				29 MAR 06
	α	β	α	β	α	β	
Background	0 cpm	25 cpm	0 cpm	25 cpm	cpm	cpm	5 μR/hr
Efficiency	29 %	25 %	29 %	25 %	%	%	
MDA	25 dpm	130 dpm	25 dpm	130 dpm	dpm	A dpm	

Maximum Contact Dose Rate: 0.006 mrem/hr Transport Index: 0.0 mrem/hr

	α cpm	α dpm/100 cm2	β cpm	β dpm/100 cm2
ALARA Limit	N/A	60	N/A	500
Smear #				
1	0	LMDA	24	LMDA
2	0		22	
3	0		30	
4	0		29	
5	0		34	
6	0	LMDA	26	LMDA

Smear Locations: 1 - Bottom 2 - Front 3 - Right Side 4 - Back 5 - Left Side 6 - Top

George Eliopoulos — Surveyor Name

George Eliopoulos — Surveyor Signature

Supervisor Approval

28449-S-U06XX9224-99.9

Date: 03/18/05 Time:1448

4-18-05 15:45 Bag# 9224

17110 lb GR

041805 1545 9224 0017110

Shipment Survey

Survey Number: GTEOSI-04-7568 Date: 10-5-04 Time: 1527

Waste Container Type: Super Sack Intermodal Other: N/A

Waste Container ID #: 9142 Storage Bin: 37 Gross Weight: 18150 lbs

	Ludlum 3030		Ludlum 3030		Ludlum 3030		Ludlum 19
Serial #	190641		191265				193615
Probe #	N/A		N/A		N/A		N/A
Calibration Due Date:	3-4-05		4-20-05				5-19-05
	α	β	α	β	α	β	
Background	0 cpm	25 cpm	0 cpm	25 cpm	cpm	cpm	6 μR/hr
Efficiency	29 %	25 %	29 %	25 %	N/A %	N/A %	
MDA	25 dpm	130 dpm	25 dpm	130 dpm	dpm	dpm	

Maximum Contact Dose Rate: 0.010 mrem/hr Transport Index: 0 mrem/hr

	α cpm	α dpm/100 cm2	β cpm	β dpm/100 cm2
ALARA Limit	N/A	60	N/A	500
Smear #				
1	0	<MDA	38	<MDA
2	0		32	
3	0		29	
4	0		28	
5	0		32	
6	1		25	

Smear Locations: 1 - Bottom 2 - Front 3 - Right Side 4 - Back 5 - Left Side 6 - Top

S. ECKERT
Surveyor Name

Surveyor Signature

George Economos
Supervisor Approval

18181-S-LPH139142-03.0
Date: 10/05/04 Time: 1118

10-05-04 15:27 Bag# 9142
18150 lb GR
100504 1527 9142 0018150

Shipment Survey

Survey Number: GTEOSI-04-7586 Date: 10-27-04 Time: 1613

Waste Container Type: Super Sack Intermodal Other: ~~ALA~~ DEBRIS SAE 10-29-04

Waste Container ID #: 9149 Storage Bin: 40 Gross Weight: 12120 lbs

	Ludlum 3030		Ludlum 3030		Ludlum 3030		L-19
Serial #	190641		191265				196117
Probe #	N/A		N/A		N/A		N/A
Calibration Due Date:	3-4-05		4-20-05				8-10-05
	α	β	α	β	α	β	
Background	0 cpm	25 cpm	0 cpm	25 cpm	cpm	cpm	6 µR/hr
Efficiency	29 %	25 %	29 %	25 %	N/A %	N/A %	
MDA	25 dpm	130 dpm	25 dpm	130 dpm	dpm	dpm	

Maximum Contact Dose Rate: .010 mrem/hr Transport Index: 0 mrem/hr

	α cpm	α dpm/100 cm2	β cpm	β dpm/100 cm2
ALARA Limit	N/A	60	N/A	500
Smear #				
1	0	<MDA	20	<MDA
2	0		24	
3	0		37	
4	0		34	
5	0		39	
6	1		22	

Smear Locations: 1 - Bottom 2 - Front 3 - Right Side 4 - Back 5 - Left Side 6 - Top

S. Eckert
Surveyor Name

Surveyor Signature

George Economos
Supervisor Approval

20082-D-DEBRI9149-99.9
Date: 11/01/04 Time:0824

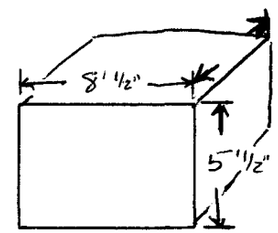

CONTACT 0.010 MREM/HR
1 METER 0.006 MREM/HR

10-27-04 18:13 Bag# 9149
12120 lb GR
102704 1613 9149 0012120

NYSDEC:V00089-1; URS27010-039

BagNum	MANIFEST GROSS WEIGHT
9160	17040

Shipment Survey

y Number: GTEOSI-04-7587 Date: 10-28-04 Time: 1442

Waste Container Type: Super Sack Intermodal Other: DEBRIS

Waste Container ID #: 9160 Storage Bin: 40 Gross Weight: 17040 lbs

	Ludlum 3030		Ludlum 3030		Ludlum 3030		LMI 19
Serial #	190641		191265				196117
Probe #	N/A		N/A		N/A		N/A
Calibration Due Date:	3-4-05		4-20-05				8-10-05
	α	β	α	β	α	β	
Background	0 cpm	25 cpm	0 cpm	25 cpm	cpm	cpm	6 μR/hr
Efficiency	29 %	25 %	29 %	25 %	N/A %	N/A %	
MDA	25 dpm	130 dpm	25 dpm	130 dpm	dpm	dpm	

Maximum Contact Dose Rate: 0.010 mrem/hr Transport Index: 0 mrem/hr

	α cpm	α dpm/100 cm2	β cpm	β dpm/100 cm2
ALARA Limit	N/A	60	N/A	600
Smear #				
1	0	<MDA	30	<MDA
2	0		25	
3	0		24	
4	1		26	
5	0		22	
6	1		30	

Smear Locations: 1 - Bottom 2 - Front 3 - Right Side 4 - Back 5 - Left Side 6 - Top

S. Eckert
Surveyor Name

Surveyor Signature

George Economou
Supervisor Approval

19967-S-LPH029160-02.5
Date: 10/28/04 Time:1338

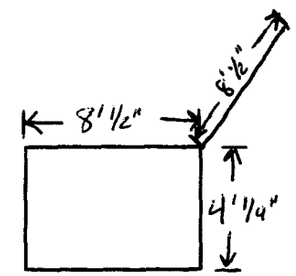

Contact - .010 mrem/HR
1 meter - .006 mrem/HR

10-28-04 14:42 Bag# 9160
17040 lb GR
102804 1442 9160 0017040

NYSDEC:V00089-1; URS27010-039

Shipment Survey

Survey Number: GTEOSI-04-7588 Date: 11-11-04 Time: 1525

Waste Container Type: Super Sack Intermodal Other: Soil

Waste Container ID #: 9150 Storage Bin: 41 Gross Weight: 20140 lbs

	Ludlum 3030		Ludlum 3030		Ludlum 3030		L-19
Serial #	190641		191265				196117
Probe #	N/A		N/A		N/A		N/A
Calibration Due Date:	3-4-05		4-20-05				8-10-05
	α	β	α	β	α	β	
Background	0 cpm	25 cpm	0 cpm	25 cpm	cpm	cpm	6 μR/hr
Efficiency	29 %	25 %	29 %	25 %	N/A %	N/A %	
MDA	25 dpm	130 dpm	25 dpm	130 dpm	dpm	dpm	

Maximum Contact Dose Rate: 0.010 mrem/hr Transport Index: 0 mrem/hr

	α cpm	α dpm/100 cm2	β cpm	β dpm/100 cm2
ALARA Limit	N/A	60	N/A	500
Smear #				
1	0	<MDA	28	<MDA
2	0		25	
3	0		28	
4	0		37	
5	0		23	
6	0		29	

Smear Locations: 1 - Bottom 2 - Front 3 - Right Side 4 - Back 5 - Left Side 6 - Top

S. Eckert
Surveyor Name

Surveyor Signature

George Economos
Supervisor Approval

19452-S-04V169150-99.9
Date: 10/21/04 Time:1639

11-11-04 15:25 Bag# 9150
20140 lb GR
111104 1525 9150 0020140

BagNum	MANIFEST GROSS WEIGHT
9159	18930

Shipment Survey

Survey Number: GTEOSI-04-7590 Date: 11-11-04 Time: 1605

Waste Container Type: Super Sack Intermodal Other: Soil

Waste Container ID #: 9159 Storage Bin: 41 Gross Weight: 18930 lbs

	Ludlum 3030		Ludlum 3030		Ludlum 3030		L-19
Serial #	190641		191265				196117
Probe #	N/A		N/A		N/A		N/A
Calibration Due Date:	3-4-05		4-20-05				8-10-05
	α	β	α	β	α	β	
Background	0 cpm	25 cpm	0 cpm	25 cpm	cpm	cpm	6 μR/hr
Efficiency	29 %	25 %	29 %	25 %	N/A %	N/A %	
MDA	25 dpm	130 dpm	25 dpm	130 dpm	dpm	dpm	

Maximum Contact Dose Rate: 0.010 mrem/hr Transport Index: 0 mrem/hr

	α cpm	α dpm/100 cm2	β cpm	β dpm/100 cm2
ALARA Limit	N/A	60	N/A	500
Smear #				
1	0	<MDA	27	<MDA
2	0		31	
3	0		24	
4	0		28	
5	0		33	
6	0		32	

Smear Locations: 1 - Bottom 2 - Front 3 - Right Side 4 - Back 5 - Left Side 6 - Top

S. Eckert
Surveyor Name

Surveyor Signature

George Economus
Supervisor Approval

21000-S-LPH029159-99.9
Date: 11/10/04 Time:1128

11-11-04 16:05 Bag# 9159
18930 lb GR
111104 1605 9159 0018930

NYSDEC:V00089-1; URS27010-039

BagNum	MANIFEST GROSS WEIGHT
9161	19550

Shipment Survey

Survey Number: GTEOSI-04-7592 Date: 11-30-04 Time: 0842

Waste Container Type: Super Sack Intermodal Other: Soil

Waste Container ID #: 9161 Storage Bin: 40 Gross Weight: 19550 lbs

	Ludlum 3030		Ludlum 3030		Ludlum 3030		L-19
Serial #	190641		191265				193595
Probe #	N/A		N/A		N/A		N/A
Calibration Due Date:	3-4-05		4-20-05				5-08-05
	α	β	α	β	α	β	
Background	0 cpm	25 cpm	0 cpm	25 cpm	cpm	cpm	6 µR/hr
Efficiency	29 %	25 %	29 %	25 %	N/A %	N/A %	
MDA	25 dpm	130 dpm	25 dpm	130 dpm	dpm	dpm	

Maximum Contact Dose Rate: .008 mrem/hr Transport Index: 0 mrem/hr

	α cpm	α dpm/100 cm2	β cpm	β dpm/100 cm2
ALARA Limit	N/A	60	N/A	500
Smear #				
1	0	<MDA	42	
2	1		44	
3	0		32	
4	0		25	
5	0		33	
6	0		29	

Smear Locations: 1 - Bottom 2 - Front 3 - Right Side 4 - Back 5 - Left Side 6 - Top

DEBRA LEPAGE — Debra L Page

Surveyor Name — Surveyor Signature

George Lionomis

Supervisor Approval

20855-S-09E199161-99.9

Date: 11/09/04 Time:1112

11-30-04 8:42 Bag# 9161

19550 lb GR

113004 0842 9161 0019550

BagNum	MANIFEST GROSS WEIGHT
9162	20880

Shipment Survey

Survey Number: GTEOSI-04-7593 Date: 11-30-04 Time: 0857

Waste Container Type: Super Sack Intermodal Other: Soil

Waste Container ID #: 9162 Storage Bin: 42 Gross Weight: 20,880 lbs

	Ludlum 3030		Ludlum 3030		Ludlum 3030		L-19
Serial #	190641		191265				193595
Probe #	N/A		N/A		N/A		N/A
Calibration Due Date:	3-4-05		4-20-05				5-08-05
	α	β	α	β	α	β	
Background	0 cpm	25 cpm	0 cpm	25 cpm	cpm	cpm	6 μR/hr
Efficiency	29 %	25 %	29 %	25 %	N/A %	N/A %	
MDA	25 dpm	130 dpm	25 dpm	130 dpm	dpm	dpm	

Maximum Contact Dose Rate: .008 mrem/hr Transport Index: 0 mrem/hr

	α cpm	α dpm/100 cm2	β cpm	β dpm/100 cm2
ALARA Limit	N/A	60	N/A	500
Smear #				
1	0	<MDA	37	<MDA
2	0		26	
3	0		29	
4	0		25	
5	1		25	
6	1		25	

Smear Locations: 1 - Bottom 2 - Front 3 - Right Side 4 - Back 5 - Left Side 6 - Top

DEBRA LEPAGE — Debra L Page
Surveyor Name — Surveyor Signature

George Economos
Supervisor Approval

21255-S-LPH019162-99.9
Date: 11/12/04 Time:0855

11-30-04 8:57 Bag# 9162
20880 lb GR
113004 0857 9162 0020880

NYSDEC:V00089-1; URS27010-039

BagNum	MANIFEST GROSS WEIGHT
9167	20720

Shipment Survey

Survey Number: GTEOSI-04-7594 Date: 11-30-04 Time: 1548

Waste Container Type: Super Sack Intermodal Other: soil

Waste Container ID #: 9167 Storage Bin: 42 Gross Weight: 20720 lbs

	Ludlum 3030		Ludlum 3030		Ludlum 3030		Ludlum 19
Serial #	190641		191265				193595
Probe #	N/A		N/A		N/A		N/A
Calibration Due Date:	3-4-05		4-20-05				5-08-05
	α	β	α	β	α	β	
Background	0 cpm	25 cpm	0 cpm	25 cpm	cpm	cpm	6 μR/hr
Efficiency	29 %	25 %	29 %	25 %	N/A %	N/A %	
MDA	25 dpm	130 dpm	25 dpm	130 dpm	dpm	dpm	

Maximum Contact Dose Rate: .009 mrem/hr Transport Index: 0 mrem/hr

	α cpm	α dpm/100 cm2	β cpm	β dpm/100 cm2
ALARA Limit	N/A	60	N/A	500
Smear #				
1	0	<MDA	28	<MDA
2	0		36	
3	0		31	
4	0		33	
5	0		27	
6			21	

Smear Locations: 1 - Bottom 2 - Front 3 - Right Side 4 - Back 5 - Left Side 6 - Top

DEBRA LePage — Surveyor Name

Debra LePage — Surveyor Signature

George Economos — Supervisor Approval

22126-S-XXM039167-02.5
Date: 11/30/04 Time: 1354

11-30-04 15:48 Bag# 9167
20720 lb GR
113004 1548 9167 0020720

BagNum	MANIFEST GROSS WEIGHT
9168	22420

Shipment Survey

Survey Number: GTEOSI-04-7596 Date: 12-2-04 Time: 0858

Waste Container Type: Super Sack Intermodal Other: Soil

Waste Container ID #: 9168 Storage Bin: 42 Gross Weight: 22420 lbs

	Ludlum 3030		Ludlum 3030		Ludlum 3030		Ludlum 19
Serial #	190641		191265				193615
Probe #	N/A		N/A		N/A		N/A
Calibration Due Date:	3-4-05		4-20-05				5-19-05
	α	β	α	β	α	β	
Background	0 cpm	25 cpm	0 cpm	25 cpm	cpm	cpm	6 μR/hr
Efficiency	29 %	25 %	29 %	25 %	N/A %	N/A %	
MDA	25 dpm	130 dpm	25 dpm	130 dpm	dpm	dpm	

Maximum Contact Dose Rate: .010 mrem/hr Transport Index: 0 mrem/hr

	α cpm	α dpm/100 cm2	β cpm	β dpm/100 cm2
ALARA Limit	N/A	60	N/A	500
Smear #				
1	0	<MDA	30	<MDA
2	0		24	
3	0		25	
4	0		26	
5	0		25	
6	0		30	

Smear Locations: 1 - Bottom 2 - Front 3 - Right Side 4 - Back 5 - Left Side 6 - Top

Debra LePage — Surveyor Name

Debra LePage — Surveyor Signature

George Economos — Supervisor Approval

22213-S-XXN039168-02.5
Date: 12/01/04 Time:1135

12-02-04 8:58 Bag# 9168
22420 lb GR
120204 0858 9168 0022420

Shipment Survey

Survey Number: ETEOSI-05-00331 Date: 4-22-05 Time: 0800

Waste Container Type: Super Sack Intermodal Other: SOIL

Waste Container ID #: 9193 Storage Bin: N/A Gross Weight: 11730 lbs

	Ludlum 3030		Ludlum 3030		Ludlum 3030		L-19
Serial #	190646		196165		N		193615
Probe #	N/A		N/A				N/A
Calibration Due Date:	12-13-05		7-18-05				3-29-06
	α	β	α	β	α	β	
Background	0 cpm	25 cpm	0 cpm	25 cpm	cpm	cpm	5 μR/hr
Efficiency	29 %	25 %	29 %	25 %	%	%	
MDA	25 dpm	130 dpm	25 dpm	130 dpm	dpm	A dpm	

Maximum Contact Dose Rate: .005 mrem/hr Transport Index: 0 mrem/hr

	α cpm	α dpm/100 cm2	β cpm	β dpm/100 cm2
ALARA Limit	N/A	60	N/A	500
Smear #				
1	0	<MDA	23	<MDA
2	2		31	
3	0		29	
4	0		24	
5	0		33	
6	0		25	

Smear Locations: 1 - Bottom 2 - Front 3 - Right Side 4 - Back 5 - Left Side 6 - Top

JOHN MITCHELL, SR
Surveyor Name

John Mitchell, Sr.
Surveyor Signature

George Elmore
Supervisor Approval

30556-S-U05XX9193-99.9
Date: 04/26/05 Time:1022

4-22-05 7:37 Bag# 9193
11730 lb GR
042205 0737 9193 0011730

NYSDEC:V00089-1; URS27010-039

Attachment 5.10
TRANSPORT VEHICLE RELEASE CHECKLIST

Shipment Number- 0840.01-981

Truck Number- 38 - 44

Trailer Number- 225 - 226

A qualified MHF-LS shipping technician shall verify that each item listed is satisfactory and then place a Check Mark in the corresponding box.

1. Driver possesses a valid driver's license with a HAZMAT endorsement ☑
2. Driver possesses a valid copy of a "Research and Special Programs Administration" U.S. DOT Hazmat Registration Certificate ☑
3. If manifested on a Hazardous Waste Manifest, ensure the carrier possesses a current EPA ID # ☐
4. Lamps are operable ☑
   - Headlights and Brights
   - Warning Lights and Flashers
   - Brake Lights
5. Coupling devices are intact ☑
6. Tires are sufficient ☑
   - No fabric is exposed through tread or sidewall
   - Front wheel tires must have tread pattern to a depth of ≥1/8 inch
   - Other tires must have tread pattern to a depth of ≥1/16 inch
   - Re-treaded tires are not authorized
7. Horn is operable ☑
8. Windshield wipers are operable ☑
9. Rear-vision mirrors are adequate (1 on each side) ☑
10. Emergency equipment is on-hand and accessible ☑
    - Fire extinguisher
    - Warning devices- bi-directional emergency reflectors, triangles (3), or liquid burning flares
11. General vehicle integrity is satisfactory ☑
    - Frame appears undamaged
    - Flooring is sufficient to support load
    - If a closed transport vehicle, vehicle is closed
    - Vehicle is otherwise in unimpaired physical condition
12. Vehicle truck and trailer have current DOT inspection stickers on both components (Good for 1 year from date performed) ☑
13. Vehicle is properly placarded (Exclusive Use LSA, Yellow III and HRCQ only) ☑
14. Shoring, strapping, blocking and bracing is adequate to prevent shifting of lading ☑

MHF-LS Qualified Technician Signature _____
Shipment Date 5-19-05

Attachment 5.9
LOADING DIAGRAM

A qualified MHF-LS shipper shall complete the following diagram by writing the package number and corresponding weight at the approximate position in which it is placed. The space to the left of the diagram may be used for additional or explanatory information as necessary.

Shipment Number- 0840-01-981

Front

9224
17110-lbs

9142
18150-lbs

Rear

MHF-LS Qualified Technician
Signature _____
Shipment Date 5-9-03

Attachment 5.9
LOADING DIAGRAM

A qualified MHF-LS shipper shall complete the following diagram by writing the package number and corresponding weight at the approximate position in which it is placed. The space to the left of the diagram may be used for additional or explanatory information as necessary.

Shipment Number- 0840.01-981

Front

9149
12120-lbs

9160
17040-lbs

Rear

MHF-LS Qualified Technician
Signature _____
Shipment Date 5-18-05

Attachment 5.9
LOADING DIAGRAM

A qualified MHF-LS shipper shall complete the following diagram by writing the package number and corresponding weight at the approximate position in which it is placed. The space to the left of the diagram may be used for additional or explanatory information as necessary.

Shipment Number- 0240-01-981

Front

9150
20140-lbs

9159
18930-lbs

Rear

MHF-LS Qualified Technician
Signature _____
Shipment Date 5-17-05

Attachment 5.9
LOADING DIAGRAM

A qualified MHF-LS shipper shall complete the following diagram by writing the package number and corresponding weight at the approximate position in which it is placed. The space to the left of the diagram may be used for additional or explanatory information as necessary.

Shipment Number- 0840-01-981

Front

9161
19550-lbs

9162
20880-lbs

Rear

MHF-LS Qualified Technician
Signature [signature]
Shipment Date 5-19-05

Attachment 5.9
LOADING DIAGRAM

A qualified MHF-LS shipper shall complete the following diagram by writing the package number and corresponding weight at the approximate position in which it is placed. The space to the left of the diagram may be used for additional or explanatory information as necessary.

Shipment Number- 0840. 91-981

Front

9167
20720-lbs

9168
22420-lbs

Rear

MHF-LS Qualified Technician
Signature [signature]
Shipment Date 5-17-05

Attachment 5.9
LOADING DIAGRAM

A qualified MHF-LS shipper shall complete the following diagram by writing the package number and corresponding weight at the approximate position in which it is placed. The space to the left of the diagram may be used for additional or explanatory information as necessary.

Shipment Number- 0840.01-981

Front

9193

11730-lbs

Rear

MHF-LS Qualified Technician
Signature_____
Shipment Date 5-18-05

Attachment 5.15
RAILCAR INSPECTION FORM

Shipment Number	Carrier	Railcar Number
0840-01-981	NYARR / MHF	NHRX-1004

Item	SAT	UNSAT	Criteria	Comments
Coupler	☑	☐	Hardware intact, no cracks or broken welds, latching mechanism works properly, no loose or damaged parts	
Suspension	☑	☐	Hardware intact, no visible cracks or broken welds, coil springs seated and intact, inner and outer bearings intact and seated properly	
Wheel & Axle Assembly	☑	☐	Overall condition, no cracks or damaged areas on wheel surfaces, hubs centered, bolting intact, rims not bent or cracked	
Frame & Undercarriage	☑	☐	Main beams straight and centered, no major bends or damage, welds intact, no cracks	
Floors & Walls (Gondola, Boxcar)	☑	☐	No damage with open holes, punch throughs, ect. No rust damage, seams and welds intact, no rotting or other material problems, structurally sound	
Attachment Points or Tie Downs	☑	☐	Tie down hardware straight and intact, no cracks on or around attachment hardware, mechanical clips or latches operable and complete	
Doors (Boxcar Only)	☑	☐	Can be closed and secured properly, lubricated properly, rollers and tracks in operable condition, no loose or missing hardware, sealing surfaces intact and seals in serviceable condition	
Seals and Gasket	☑	☐	Seal Flanges intact with no dents or bends that affect sealing capability, gaskets pliable and in serviceable condition, no torn or missing areas, gasket appropriate to meet sealing requirements	
Seams (Gondola, Boxcar)	☑	☐	Seams intact, welds visibly sufficient, all corners and mating interfaces caulked and sealed properly	
Drains	☑	☐	Drains plugged or sealed properly, verify threaded plugs are tack welded or otherwise disabled, all other holes closed and sealed	
Brakes	☑	☐	Visibly inspect brake shoes, minimum 1" contact surface on all shoes, hoses and piping (tubing) mechanically sound, no missing or loose hardware, valves operate freely, no kinks or obstructions in piping or hoses	
Paint and Lettering	☑	☐	Overall good condition of exterior surfaces, identification numbering legible and intact, areas for placards or labels intact and structurally sound (Wood or metal panels)	
Bracing	☑	☐	Bracing and shoring must be sufficient to prevent shifting of lading during conditions normally incident to transportation	

MHF-LS Qualified Technician Signature _____

Shipment Date 5-19-05

Straight Bill of Lading

Shipper MHF-LS For GTE Operations Support Incorporated
140 Contiague Rock Road
Hicksville, NY 11369

Date: 5/19/2005

Consigned to MHF-LS @ New York-Atlantic Rail Spur
Hicksville, NY 11369

Load in Gondola # NHRX 1004

Emergency Contact: CHEMTREC 800-424-9300

Total All Trucks 198790

TR: TL:

Quantity	Description		Net Waste Weight
2	Soil, DOT Non-Regulated Waste, Containing		
	Radioactive Materials.		
	Package ID Number		**Pounds:**
	Liner	9224	17110
	Liner	9142	18150
			Total:
			35260
	Packages do not meet the DOT "radioactive material"		
	definition in 49 CFR 173.403.		
	Radionuclide: Ac-227,Th-227, Th232, Th230,Pa-231,Ra-223		
	Ra-226,Ra-228,Th-228,U-234,U-nat,		5.1593
	Total Activity: 5.1593 MBq		
	Physical Form: Solid		
	Chemical Form: Metal Oxide		

GENERATOR CERTIFICATION: I hereby certify and declare that the contents of this consignment are fully and accurately described above by proper shipping name and are classified, packed, marked, and labeled, and are in all respects in proper condition for transport by highway according to applicable international and national government regulations

Printed/Typed Name	Signature		Date
Robert Miller for MHFLS at GTEOSI			5/19/2005
Transporter	Signature		Date
Priority Transport			5/19/2005

Straight Bill of Lading

Shipper MHF-LS For GTE Operations Support Incorporated
140 Contiague Rock Road
Hicksville, NY 11369

Date: 5/19/2005

Consigned to MHF-LS @ New York-Atlantic Rail Spur
Hicksville, NY 11369

Load in Gondola # NHRX 1004

Emergency Contact: CHEMTREC 800-424-9300

TR: TL:

Quantity	Description		Net Waste Weight
2	Soil, DOT Non-Regulated Waste, Containing		
	Radioactive Materials.		
	Package ID Number		**Pounds:**
	Liner	9149	12120
	Liner	9160	17040
			Total:
			29160
	Packages do not meet the DOT "radioactive material"		
	definition in 49 CFR 173.403.		
	Radionuclide: Ac-227,Th-227, Th232, Th230,Pa-231,Ra-223		
	Ra-226,Ra-228,Th-228,U-234,U-nat,		43.9812
	Total Activity: 43.9812 MBq		
	Physical Form: Solid		
	Chemical Form: Metal Oxide		

GENERATOR CERTIFICATION: I hereby certify and declare that the contents of this consignment are fully and accurately described above by proper shipping name and are classified, packed, marked, and labeled, and are in all respects in proper condition for transport by highway according to applicable international and national government regulations.

Printed/Typed Name	Signature		Date
Robert Miller for MHFLS at GTEOSI			5/19/2005
Transporter	Signature		Date
Priority Transport			5/19/2005

Straight Bill of Lading

Shipper	MHF-LS For GTE Operations Support Incorporated 140 Contiague Rock Road Hicksville, NY 11369	Date: 5/19/2005
Consigned to	MHF-LS @ New York-Atlantic Rail Spur Hicksville, NY 11369	Load in Gondola # NHRX
Emergency Contact:	CHEMTREC 800-424-9300	1004

TR: TL:

Quantity	Description		Net Waste Weight
2	Soil, DOT Non-Regulated Waste, Containing		
	Radioactive Materials.		
	Package ID Number		**Pounds:**
	Liner	9161	19550
	Liner	9162	20880
			Total:
			40430
	Packages do not meet the DOT "radioactive material"		
	definition in 49 CFR 173.403.		
	Radionuclide: Ac-227,Th-227, Th232, Th230,Pa-231,Ra-223		
	Ra-226,Ra-228,Th-228,U-234,U-nat		
	Total Activity: 1.9074 MBq		
	Physical Form: Solid		
	Chemical Form: Metal Oxide		

1.9074

GENERATOR CERTIFICATION I hereby certify and declare that the contents of this consignment are fully and accurately described above by proper shipping name and are classified, packed, marked, and labeled, and are in all respects in proper condition for transport by highway according to applicable international and national government regulations

Printed/Typed Name	Signature		Date
Robert Miller for MHFLS at GTEOSI			5/19/2005
Transporter	Signature		Date
Priority Transport			5/19/2005

Straight Bill of Lading

Shipper MHF-LS For GTE Operations Support Incorporated
140 Contiague Rock Road
Hicksville, NY 11369

Date: 5/19/2005

Consigned to MHF-LS @ New York-Atlantic Rail Spur
Hicksville, NY 11369

Load in Gondola # NHRX 1004

Emergency Contact: CHEMTREC 800-424-9300

TR:

Quantity	Description		Net Waste Weight
2	Soil, DOT Non-Regulated Waste, Containing		
	Radioactive Materials.		
	Package ID Number		**Pounds:**
	Liner	9150	20140
	Liner	9159	18930
			Total:
			39070
	Packages do not meet the DOT "radioactive material"		
	definition in 49 CFR 173.403.		
	Radionuclide: Ac-227,Th-227, Th232, Th230,Pa-231,Ra-223		
	Ra-226,Ra-228,Th-228,U-234,U-nat		
	Total Activity: 2.9329 MBq		
	Physical Form: Solid		
	Chemical Form: Metal Oxide		

2.9329

GENERATOR CERTIFICATION: I hereby certify and declare that the contents of this consignment are fully and accurately described above by proper shipping name and are classified, packed, marked, and labeled, and are in all respects in proper condition for transport by highway according to applicable international and national government regulations

Printed/Typed Name	Signature		Date
Robert Miller for MHFLS at GTEOSI			5/19/2005
Transporter	Signature		Date
Priority Transport			5/19/2005

Straight Bill of Lading

Shipper MHF-LS For GTE Operations Support Incorporated
140 Contiague Rock Road
Hicksville, NY 11369

Date: 5/19/2005

Consigned to MHF-LS @ New York-Atlantic Rail Spur
Hicksville, NY 11369

Load in Gondola # NHRX 1004

Emergency Contact: CHEMTREC 800-424-9300

TR: TL:

Quantity	Description		Net Waste Weight
2	Soil, DOT Non-Regulated Waste, Containing		
	Radioactive Materials.		
	Package ID Number		**Pounds:**
	Liner	9167	20720
	Liner	9168	22420
			Total:
			43140
	Packages do not meet the DOT "radioactive material"		
	definition in 49 CFR 173.403.		
	Radionuclide: Ac-227,Th-227, Th232, Th230,Pa-231,Ra-223		
	Ra-226,Ra-228,Th-228,U-234,U-nat,		
	Total Activity: 32.321 MBq		
	Physical Form: Solid		
	Chemical Form: Metal Oxide		

GENERATOR CERTIFICATION: I hereby certify and declare that the contents of this consignment are fully and accurately described above by proper shipping name and are classified, packed, marked, and labeled, and are in all respects in proper condition for transport by highway according to applicable international and national government regulations.

Printed/Typed Name	Signature		Date
Robert Miller for MHFLS at GTEOSI			5/19/2005
Transporter	Signature		Date
Priority Transport			5/19/2005

Straight Bill of Lading

Shipper	MHF-LS For GTE Operations Support Incorporated 140 Contiague Rock Road Hicksville, NY 11369	Date: 5/19/2005
Consigned to	MHF-LS @ New York-Atlantic Rail Spur Hicksville, NY 11369	Load in Gondola # NHRX 1004
Emergency Contact:	CHEMTREC 800-424-9300	

TR: TL:

Quantity	Description		Net Waste Weight
1	Soil, DOT Non-Regulated Waste, Containing		
	Radioactive Materials.		
	Package ID Number		**Pounds:**
	Liner	9193	11730
	Liner		
			Total:
			11730
	Packages do not meet the DOT "radioactive material"		
	definition in 49 CFR 173.403.		
	Radionuclide: Ac-227,Th-227, Th232, Th230,Pa-231,Ra-223		
	Ra-226,Ra-228,Th-228,U-234,U-nat,		
	Total Activity: 1.569 MBq		
	Physical Form: Solid		
	Chemical Form: Metal Oxide		

GENERATOR CERTIFICATION: I hereby certify and declare that the contents of this consignment are fully and accurately described above by proper shipping name and are classified, packed, marked, and labeled, and are in all respects in proper condition for transport by highway according to applicable international and national government regulations.

Printed/Typed Name	Signature		Date
Robert Miller for MHFLS at GTEOSI			5/19/2005
Transporter	Signature		Date
Priority Transport			5/19/2005

NHRX	Shipment #		0												
	new	Bag #		9224	9142	9149	9160	9150	9159	9161	9162	9167	9168	9193	
	Storage Loc.			17110	18150	12120	17040	20140	18930	19550	20880	20720	22420	11730	
1004	0840-01-981		200000												

container #
9224

shipping check sheet (For Form 540)

	Ac-227		corrected	activity mBq	activity mCi	activity Ci	SNM	source	
		3.304E-002	3.304E-002	9.4518E-03	2.5545E-04	2.5545E-07	grams	kg	
grams			pCi/g				3.5480E-09	3.5480E-12	
7731620		7.2000E+01							
	Pa-231			activity mBq	activity mCi	activity Ci	SNM	source	
17030		2.969E-001	2.969E-001	8.4934E-02	2.2955E-03	2.2955E-06	grams	kg	
grams							4.8841E-05	4.8841E-08	
7731620		4.7000E-02							
	Ra-223			activity mBq	activity mCi	activity Ci	SNM	source	
17030		4.606E-002	4.606E-002	1.3176E-02	3.5612E-04	3.5612E-07	grams	kg	
grams							6.9827E-12	6.9827E-15	
7731620		5.1000E+04							
	Ra-226			activity mBq	activity mCi	activity Ci	SNM	source	
17030		2.008E-001	1.4578E-01	4.1704E-02	1.1271E-03	1.1271E-06	grams	kg	1.37741
grams							1.1271E-06	1.1271E-09	
7731620		1.0000E+00							
	Ra228			activity mBq	activity mCi	activity Ci	SNM	source	
17030		2.541E-001	3.6043E-01	1.0311E-01	2.7867E-03	2.7867E-06	grams	kg	0.705
grams							1.0321E-08	1.0321E-11	
7731620		2.7000E+02							
	TH-227			activity mBq	activity mCi	activity Ci	SNM	source	
17030		3.304E-002	3.304E-002	9.4518E-03	2.5545E-04	2.5545E-07	grams	kg	
grams							8.2404E-12	8.2404E-15	
7731620		3.1000E+04							
	Th-228			activity mBq	activity mCi	activity Ci	SNM	source	
17030		2.162E-001	3.9046E-01	1.1170E-01	3.0189E-03	3.0189E-06	grams	kg	
grams							3.6815E-09	3.6815E-12	0.55371
7731620		8.2000E+02							
	Th-230			activity mBq	activity mCi	activity Ci	SNM	source	
17030		2.541E-001	1.8854E-01	5.3936E-02	1.4577E-03	1.4577E-06	grams	kg	
grams							6.9416E-05	6.9416E-08	1.34771
7731620		2.1000E-02							
	TH-232			activity mBq	activity mCi	activity Ci	SNM	source	
17030		2.541E-001	3.6043E-01	1.0311E-01	2.7867E-03	2.7867E-06	grams	kg	0.705
grams							2.5333E+01	2.5333E-02	
7731620		1.1000E-07							
	U-234			activity mBq	activity mCi	activity Ci	SNM	source	
17030		1.278E+000	1.1349E+00	3.2465E-01	8.7743E-03	8.7743E-06	grams	kg	1.12613
grams							1.4152E-03	1.4152E-06	
7731620		6.2000E-03							
	U-235			activity mBq	activity mCi	activity Ci	SNM	source	
17030		1.430E-001	1.8310E-01	5.2379E-02	1.4156E-03	1.4156E-06	grams	kg	0.781
grams							6.4348E-01	6.4348E-04	
7731620		2.2000E-06							
	U-238			activity mBq	activity mCi	activity Ci	SNM	source	
17030		1.278E+000	1.7247E+00	4.9338E-01	1.3335E-02	1.3335E-05	grams	kg	0.741
grams							3.9220E+01	3.9220E-02	
7731620		3.4000E-07							

Totals for all flag 1 data

			corrected	activity mBq	activity mCi	activity Ci	SNM	source	
17030		4.2873E+00	4.8643E+00	1.4010E+00	3.7864E-02	3.7864E-05	grams	kg	flag1 data
			pCi/g	541 will be < than the 540 (MDA not added)			6.4348E-01	6.4555E-02	
135.1587302				data for NORM					
	U-nat		corrected pCi/g	activity mBq	activity mCi	activity Ci		source	
		1.4210E+00	1.9078E+00	5.4576E-01	1.4750E-02	1.4750E-05		kg	
								2.0775E-02	
		7.1000E-07							

U-nat		corrected pCi/g	activity mBq	activity mCi	activity Ci		source	
	4.2873E+00	4.8643E+00	1.4010E+00	[illegible]	3.7864E-05		kg total	norm data
							4.6110E-02	

container #
9142

shipping check sheet (For Form 540)

	Ac-227		corrected	activity mBq	activity mCi	activity Ci	SNM	source	
		5.938E-002	5.938E-002	1.8024E-02	4.8714E-04	4.8714E-07	grams	kg	
grams			pCi/g				6.7658E-09	6.7658E-12	
8203780		7.2000E+01							
	Pa-231			activity mBq	activity mCi	activity Ci	SNM	source	
18070		2.037E-001	2.037E-001	6.1831E-02	1.6711E-03	1.6711E-06	grams	kg	
grams							3.5556E-05	3.5556E-08	
8203780		4.7000E-02							
	Ra-223			activity mBq	activity mCi	activity Ci	SNM	source	
18070		8.024E-002	8.024E-002	2.4356E-02	6.5827E-04	6.5827E-07	grams	kg	
grams							1.2907E-11	1.2907E-14	
8203780		5.1000E+04							
	Ra-226			activity mBq	activity mCi	activity Ci	SNM	source	
18070		3.144E-001	2.2825E-01	6.9284E-02	1.8725E-03	1.8725E-06	grams	kg	1.37741
grams							1.8725E-06	1.8725E-09	
8203780		1.0000E+00							
	Ra228			activity mBq	activity mCi	activity Ci	SNM	source	
18070		5.279E-001	7.4879E-01	2.2729E-01	6.1429E-03	6.1429E-06	grams	kg	0.705
grams							2.2752E-08	2.2752E-11	
8203780		2.7000E+02							
	TH-227			activity mBq	activity mCi	activity Ci	SNM	source	
18070		5.938E-002	5.938E-002	1.8024E-02	4.8714E-04	4.8714E-07	grams	kg	
grams							1.5714E-11	1.5714E-14	
8203780		3.1000E+04							
	Th-228			activity mBq	activity mCi	activity Ci	SNM	source	
18070		4.769E-001	8.6128E-01	2.6143E-01	7.0658E-03	7.0658E-06	grams	kg	
grams							8.6168E-09	8.6168E-12	0.55371
8203780		8.2000E+02							
	Th-230			activity mBq	activity mCi	activity Ci	SNM	source	
18070		5.279E-001	3.9170E-01	1.1890E-01	3.2134E-03	3.2134E-06	grams	kg	
grams							1.5302E-04	1.5302E-07	1.34771
8203780		2.1000E-02							
	TH-232			activity mBq	activity mCi	activity Ci	SNM	source	
18070		5.279E-001	7.4879E-01	2.2729E-01	6.1429E-03	6.1429E-06	grams	kg	0.705
grams							5.5845E+01	5.5845E-02	
8203780		1.1000E-07							
	U-234			activity mBq	activity mCi	activity Ci	SNM	source	
18070		3.871E+000	3.4374E+00	1.0434E+00	2.8200E-02	2.8200E-05	grams	kg	1.12613
grams							4.5484E-03	4.5484E-06	
8203780		6.2000E-03							
	U-235			activity mBq	activity mCi	activity Ci	SNM	source	
18070		2.645E-001	3.3867E-01	1.0280E-01	2.7784E-03	2.7784E-06	grams	kg	0.781
grams							1.2629E+00	1.2629E-03	
8203780		2.2000E-06							
	U-238			activity mBq	activity mCi	activity Ci	SNM	source	
18070		3.871E+000	5.2240E+00	1.5857E+00	4.2857E-02	4.2857E-05	grams	kg	0.741
grams							1.2605E+02	1.2605E-01	
8203780		3.4000E-07							

Totals for all flag 1 data

			corrected	activity mBq	activity mCi	activity Ci	SNM	source	
18070		1.0784E+01	1.2322E+01	3.7583E+00	1.0158E-01	1.0158E-04	grams	kg	flag1 data
			pCi/g	541 will be < than the 540 (MDA not added)			1.2629E+00	1.8190E-01	
143.4126984				data for NORM					
	U-nat		corrected pCi/g	activity mBq	activity mCi	activity Ci		source	
		4.1355E+00	5.5627E+00	1.6885E+00	4.5635E-02	4.5635E-05		kg	
								6.4275E-02	
		7.1000E-07							

U-nat		corrected pCi/g	activity mBq	activity mCi	activity Ci		source	
	1.0784E+01	1.2322E+01	3.7583E+00	1.0158E-01	1.0158E-04		kg total	norm data
							1.2012E-01	

X

container #
9149

shipping check sheet (For Form 540)

	Ac-227		corrected	activity mBq	activity mCi	activity Ci	SNM	source	
		1.097E-001	1.097E-001	2.2187E-02	5.9964E-04	5.9964E-07	grams	kg	
grams			pCi/g				8.3283E-09	8.3283E-12	
5466160		7.2000E+01							
	Pa-231			activity mBq	activity mCi	activity Ci	SNM	source	
12040		1.159E+000	1.159E+000	2.3441E-01	6.3353E-03	6.3353E-06	grams	kg	
grams							1.3479E-04	1.3479E-07	
5466160		4.7000E-02							
	Ra-223			activity mBq	activity mCi	activity Ci	SNM	source	
12040		9.882E-002	9.882E-002	1.9986E-02	5.4017E-04	5.4017E-07	grams	kg	
grams							1.0591E-11	1.0591E-14	
5466160		5.1000E+04							
	Ra-226			activity mBq	activity mCi	activity Ci	SNM	source	
12040		3.349E-001	2.4314E-01	4.9174E-02	1.3290E-03	1.3290E-06	grams	kg	1.37741
grams							1.3290E-06	1.3290E-09	
5466160		1.0000E+00							
	Ra228			activity mBq	activity mCi	activity Ci	SNM	source	
12040		9.881E-001	1.4016E+00	2.8346E-01	7.6612E-03	7.6612E-06	grams	kg	0.705
grams							2.8375E-08	2.8375E-11	
5466160		2.7000E+02							
	TH-227			activity mBq	activity mCi	activity Ci	SNM	source	
12040		1.097E-001	1.097E-001	2.2187E-02	5.9964E-04	5.9964E-07	grams	kg	
grams							1.9343E-11	1.9343E-14	
5466160		3.1000E+04							
	Th-228			activity mBq	activity mCi	activity Ci	SNM	source	
12040		7.596E-001	1.3718E+00	2.7745E-01	7.4987E-03	7.4987E-06	grams	kg	
grams							9.1447E-09	9.1447E-12	0.55371
5466160		8.2000E+02							
	Th-230			activity mBq	activity mCi	activity Ci	SNM	source	
12040		9.881E-001	7.3317E-01	1.4828E-01	4.0076E-03	4.0076E-06	grams	kg	
grams							1.9084E-04	1.9084E-07	1.34771
5466160		2.1000E-02							
	TH-232			activity mBq	activity mCi	activity Ci	SNM	source	
12040		9.881E-001	1.4016E+00	2.8346E-01	7.6612E-03	7.6612E-06	grams	kg	0.705
grams							6.9647E+01	6.9647E-02	
5466160		1.1000E-07							
	U-234			activity mBq	activity mCi	activity Ci	SNM	source	
12040		8.725E+001	7.7478E+01	1.5670E+01	4.2351E-01	4.2351E-04	grams	kg	1.12613
grams							6.8307E-02	6.8307E-05	
5466160		6.2000E-03							
	U-235			activity mBq	activity mCi	activity Ci	SNM	source	
12040		4.657E+000	5.9629E+00	1.2060E+00	3.2594E-02	3.2594E-05	grams	kg	0.781
grams							1.4815E+01	1.4815E-02	
5466160		2.2000E-06							
	U-238			activity mBq	activity mCi	activity Ci	SNM	source	
12040		8.725E+001	1.1775E+02	2.3814E+01	6.4362E-01	6.4362E-04	grams	kg	0.741
grams							1.8930E+03	1.8930E+00	
5466160		3.4000E-07							

Totals for all flag 1 data

			corrected	activity mBq	activity mCi	activity Ci	SNM	source	
12040		1.8469E+02	2.0771E+02	4.2030E+01	1.1360E+00	1.1360E-03	grams	kg	flag1 data
			pCi/g	541 will be < than the 540 (MDA not added)			1.4815E+01	1.9627E+00	
96.55556556				data for NORM					
	U-nat		corrected pCi/g	activity mBq	activity mCi	activity Ci		source	
		9.1907E+01	1.2971E+02	2.5020E+01	6.7621E-01	6.7621E-04		kg	
								9.5241E-01	
		7.1000E-07							

	U-nat		corrected pCi/g	activity mBq	activity mCi	activity Ci		source	
		1.8469E+02	2.0771E+02	4.2030E+01	1.1360E+00	1.1360E-03		kg total	norm data
								1.0221E+00	

N

container #
9160

shipping check sheet (For Form 540)

	Ac-227		corrected	activity mBq	activity mCi	activity Ci	SNM	source	
		4.306E-002	4.306E-002	1.2268E-02	3.3156E-04	3.3156E-07	grams	kg	
grams			pCi/g				4.6049E-09	4.6049E-12	
7699840		7.2000E+01							
	Pa-231			activity mBq	activity mCi	activity Ci	SNM	source	
16960		3.062E-001	3.062E-001	8.7235E-02	2.3577E-03	2.3577E-06	grams	kg	
grams							5.0164E-05	5.0164E-08	
7699840		4.7000E-02							
	Ra-223			activity mBq	activity mCi	activity Ci	SNM	source	
16960		3.787E-002	3.787E-002	1.0789E-02	2.9159E-04	2.9159E-07	grams	kg	
grams							5.7175E-12	5.7175E-15	
7699840		5.1000E+04							
	Ra-226			activity mBq	activity mCi	activity Ci	SNM	source	
16960		2.584E-001	1.8760E-01	5.3446E-02	1.4445E-03	1.4445E-06	grams	kg	1.37741
grams							1.4445E-06	1.4445E-09	
7699840		1.0000E+00							
	Ra228			activity mBq	activity mCi	activity Ci	SNM	source	
16960		3.726E-001	5.2851E-01	1.5057E-01	4.0694E-03	4.0694E-06	grams	kg	0.705
grams							1.5072E-08	1.5072E-11	
7699840		2.7000E+02							
	TH-227			activity mBq	activity mCi	activity Ci	SNM	source	
16960		4.306E-002	4.306E-002	1.2268E-02	3.3156E-04	3.3156E-07	grams	kg	
grams							1.0695E-11	1.0695E-14	
7699840		3.1000E+04							
	Th-228			activity mBq	activity mCi	activity Ci	SNM	source	
16960		3.642E-001	6.5775E-01	1.8739E-01	5.0645E-03	5.0645E-06	grams	kg	
grams							6.1763E-09	6.1763E-12	0.55371
7699840		8.2000E+02							
	Th-230			activity mBq	activity mCi	activity Ci	SNM	source	
16960		3.726E-001	2.7647E-01	7.8764E-02	2.1288E-03	2.1288E-06	grams	kg	
grams							1.0137E-04	1.0137E-07	1.34771
7699840		2.1000E-02							
	TH-232			activity mBq	activity mCi	activity Ci	SNM	source	
16960		3.726E-001	5.2851E-01	1.5057E-01	4.0694E-03	4.0694E-06	grams	kg	0.705
grams							3.6995E+01	3.6995E-02	
7699840		1.1000E-07							
	U-234			activity mBq	activity mCi	activity Ci	SNM	source	
16960		1.795E+000	1.5940E+00	4.5411E-01	1.2273E-02	1.2273E-05	grams	kg	1.12613
grams							1.9795E-03	1.9795E-06	
7699840		6.2000E-03							
	U-235			activity mBq	activity mCi	activity Ci	SNM	source	
16960		1.746E-001	2.2356E-01	6.3691E-02	1.7214E-03	1.7214E-06	grams	kg	0.781
grams							7.8244E-01	7.8244E-04	
7699840		2.2000E-06							
	U-238			activity mBq	activity mCi	activity Ci	SNM	source	
16960		1.795E+000	2.4224E+00	6.9013E-01	1.8652E-02	1.8652E-05	grams	kg	0.741
grams							5.4859E+01	5.4859E-02	
7699840		3.4000E-07							

Totals for all flag 1 data

			corrected	activity mBq	activity mCi	activity Ci	SNM	source	
16960		5.9352E+00	6.8059E+00	1.9512E+00	5.2736E-02	5.2736E-05	grams	kg	flag1 data
			pCi/g	541 will be < than the 540 (MDA not added)			7.8244E-01	9.1856E-02	
134.6631746				data for NORM					
	U-nat		corrected pCi/g	activity mBq	activity mCi	activity Ci		source	
		1.9696E+00	2.6460E+00	7.5382E-01	2.0373E-02	2.0373E-05		kg	
								2.8695E-02	
		7.1000E-07							

U-nat		corrected pCi/g	activity mBq	activity mCi	activity Ci		source	
	5.9352E+00	6.8059E+00	1.9512E+00	5.2736E-02	5.2736E-05		kg total	norm data
							[illegible]

X

container #
9150

shipping check sheet (For Form 540)

	Ac-227		corrected	activity mBq	activity mCi	activity Ci	SNM	source	
		1.231E-001	1.231E-001	4.1481E-02	1.1211E-03	1.1211E-06	grams	kg	
grams			pCi/g				1.5571E-08	1.5571E-11	
9107240		7.2000E+01							
	Pa-231			activity mBq	activity mCi	activity Ci	SNM	source	
20060		3.228E-001	3.228E-001	1.0877E-01	2.9398E-03	2.9398E-06	grams	kg	
grams							6.2549E-05	6.2549E-08	
9107240		4.7000E-02							
	Ra-223			activity mBq	activity mCi	activity Ci	SNM	source	
20060		5.087E-002	5.087E-002	1.7142E-02	4.6329E-04	4.6329E-07	grams	kg	
grams							9.0840E-12	9.0840E-15	
9107240		5.1000E+04							
	Ra-226			activity mBq	activity mCi	activity Ci	SNM	source	
20060		2.072E-001	1.5043E-01	5.0689E-02	1.3700E-03	1.3700E-06	grams	kg	1.37741
grams							1.3700E-06	1.3700E-09	
9107240		1.0000E+00							
	Ra228			activity mBq	activity mCi	activity Ci	SNM	source	
20060		2.501E-001	3.5475E-01	1.1954E-01	3.2308E-03	3.2308E-06	grams	kg	0.705
grams							1.1966E-08	1.1966E-11	
9107240		2.7000E+02							
	TH-227			activity mBq	activity mCi	activity Ci	SNM	source	
20060		1.231E-001	1.231E-001	4.1481E-02	1.1211E-03	1.1211E-06	grams	kg	
grams							3.6165E-11	3.6165E-14	
9107240		3.1000E+04							
	Th-228			activity mBq	activity mCi	activity Ci	SNM	source	
20060		2.420E-001	4.3705E-01	1.4727E-01	3.9803E-03	3.9803E-06	grams	kg	
grams							4.8541E-09	4.8541E-12	0.55371
9107240		8.2000E+02							
	Th-230			activity mBq	activity mCi	activity Ci	SNM	source	
20060		2.501E-001	1.8557E-01	6.2532E-02	1.6901E-03	1.6901E-06	grams	kg	
grams							8.0479E-05	8.0479E-08	1.34771
9107240		2.1000E-02							
	TH-232			activity mBq	activity mCi	activity Ci	SNM	source	
20060		2.501E-001	3.5475E-01	1.1954E-01	3.2308E-03	3.2308E-06	grams	kg	0.705
grams							2.9371E+01	2.9371E-02	
9107240		1.1000E-07							
	U-234			activity mBq	activity mCi	activity Ci	SNM	source	
20060		6.278E-001	5.5748E-01	1.8785E-01	5.0771E-03	5.0771E-06	grams	kg	1.12613
grams							8.1889E-04	8.1889E-07	
9107240		6.2000E-03							
	U-235			activity mBq	activity mCi	activity Ci	SNM	source	
20060		2.116E-001	2.7093E-01	9.1296E-02	2.4675E-03	2.4675E-06	grams	kg	0.781
grams							1.1216E+00	1.1216E-03	
9107240		2.2000E-06							
	U-238			activity mBq	activity mCi	activity Ci	SNM	source	
20060		6.278E-001	6.4723E-01	2.8549E-01	7.7160E-03	7.7160E-06	grams	kg	0.741
grams							2.2694E+01	2.2694E-02	
9107240		3.4000E-07							

Totals for all flag 1 data

			corrected	activity mBq	activity mCi	activity Ci	SNM	source	
20060		3.2866E+00	3.6550E+00	1.2731E+00	3.4408E-02	3.4408E-05	grams	kg	flag1 data
			pCi/g	541 will be < than the 540 (MDA not added)			1.1216E+00	5.2066E-02	
159.2083492				data for NORM					
	U-nat		corrected pCi/g	activity mBq	activity mCi	activity Ci		source	
		8.3940E-01	1.1182E+00	3.7679E-01	1.0183E-02	1.0183E-05		kg	
								1.4343E-02	
		7.1000E-07							

	U-nat		corrected pCi/g	activity mBq	activity mCi	activity Ci		source	
		3.2866E+00	3.6550E+00	1.2731E+00	3.4408E-02	3.4408E-05		kg total	norm data
								4.3778E-02	

X

container #
9159

shipping check sheet (For Form 540)

	Ac-227		corrected	activity mBq	activity mCi	activity Ci	SNM	source	
		3.863E-002	3.863E-002	1.2232E-02	3.3059E-04	3.3059E-07	grams	kg	
grams			pCi/g				4.5916E-09	4.5916E-12	
8557900		7.2000E+01							
	Pa-231			activity mBq	activity mCi	activity Ci	SNM	source	
18850		2.424E-001	2.424E-001	7.6754E-02	2.0744E-03	2.0744E-06	grams	kg	
grams							4.4137E-05	4.4137E-08	
8557900		4.7000E-02							
	Ra-223			activity mBq	activity mCi	activity Ci	SNM	source	
18850		4.653E-002	4.653E-002	1.4733E-02	3.9820E-04	3.9820E-07	grams	kg	
grams							7.8078E-12	7.8078E-15	
8557900		5.1000E+04							
	Ra-226			activity mBq	activity mCi	activity Ci	SNM	source	
18850		3.078E-001	2.2346E-01	7.0758E-02	1.9124E-03	1.9124E-06	grams	kg	1.37741
grams							1.9124E-06	1.9124E-09	
8557900		1.0000E+00							
	Ra228			activity mBq	activity mCi	activity Ci	SNM	source	
18850		3.730E-001	5.2908E-01	1.6753E-01	4.5278E-03	4.5278E-06	grams	kg	0.705
grams							1.6770E-08	1.6770E-11	
8557900		2.7000E+02							
	TH-227			activity mBq	activity mCi	activity Ci	SNM	source	
18850		3.863E-002	3.863E-002	1.2232E-02	3.3059E-04	3.3059E-07	grams	kg	
grams							1.0664E-11	1.0664E-14	
8557900		3.1000E+04							
	Th-228			activity mBq	activity mCi	activity Ci	SNM	source	
18850		3.510E-001	6.3391E-01	2.0072E-01	5.4249E-03	5.4249E-06	grams	kg	
grams							6.6157E-09	6.6157E-12	0.55371
8557900		8.2000E+02							
	Th-230			activity mBq	activity mCi	activity Ci	SNM	source	
18850		3.730E-001	2.7677E-01	8.7636E-02	2.3685E-03	2.3685E-06	grams	kg	
grams							1.1279E-04	1.1279E-07	1.34771
8557900		2.1000E-02							
	TH-232			activity mBq	activity mCi	activity Ci	SNM	source	
18850		3.730E-001	5.2908E-01	1.6753E-01	4.5278E-03	4.5278E-06	grams	kg	0.705
grams							4.1162E+01	4.1162E-02	
8557900		1.1000E-07							
	U-234			activity mBq	activity mCi	activity Ci	SNM	source	
18850		1.068E+000	9.4838E-01	3.0030E-01	8.1161E-03	8.1161E-06	grams	kg	1.12613
grams							1.3091E-03	1.3091E-06	
8557900		6.2000E-03							
	U-235			activity mBq	activity mCi	activity Ci	SNM	source	
18850		2.293E-001	2.9360E-01	9.2966E-02	2.5126E-03	2.5126E-06	grams	kg	0.781
grams							1.1421E+00	1.1421E-03	
8557900		2.2000E-06							
	U-238			activity mBq	activity mCi	activity Ci	SNM	source	
18850		1.068E+000	1.4413E+00	4.5638E-01	1.2334E-02	1.2334E-05	grams	kg	0.741
grams							3.6278E+01	3.6278E-02	
8557900		3.4000E-07							

Totals for all flag 1 data

			corrected	activity mBq	activity mCi	activity Ci	SNM	source	
18850		4.5093E+00	5.2031E+00	1.6598E+00	4.4858E-02	4.4858E-05	grams	kg	flag1 data
			pCi/g	541 will be < than the 540 (MDA not added)			1.1421E+00	7.7441E-02	
149.6031746				data for NORM					
	U-nat		corrected pCi/g	activity mBq	activity mCi	activity Ci		source	
		1.2973E+00	~~1.7349E+00~~	5.4934E-01	1.4847E-02	1.4847E-05		kg	
								2.0911E-02	
		7.1000E-07							

	U-nat		corrected pCi/g	activity mBq	activity mCi	activity Ci		source	
		4.5093E+00	5.2031E+00	~~1.6598E+00~~	~~4.4858E-02~~	~~4.4858E-05~~		kg total	norm data
								~~8.2075E-02~~	

A

container #
9161

shipping check sheet (For Form 540)

	Ac-227		corrected	activity mBq	activity mCi	activity Ci	SNM	source	
		2.585E-002	2.585E-002	8.4544E-03	2.2850E-04	2.2850E-07	grams	kg	
grams			pCi/g				3.1736E-09	3.1736E-12	
8839380		7.2000E+01							
	Pa-231			activity mBq	activity mCi	activity Ci	SNM	source	
19470		1.320E-001	1.320E-001	4.3172E-02	1.1668E-03	1.1668E-06	grams	kg	
grams							2.4825E-05	2.4825E-08	
8839380		4.7000E-02							
	Ra-223			activity mBq	activity mCi	activity Ci	SNM	source	
19470		2.993E-002	2.993E-002	9.7888E-03	2.6456E-04	2.6456E-07	grams	kg	
grams							5.1875E-12	5.1875E-15	
8839380		5.1000E+04							
	Ra-226			activity mBq	activity mCi	activity Ci	SNM	source	
19470		1.059E-001	7.6883E-02	2.5145E-02	6.7960E-04	6.7960E-07	grams	kg	1.37741
grams							6.7960E-07	6.7960E-10	
8839380		1.0000E+00							
	Ra228			activity mBq	activity mCi	activity Ci	SNM	source	
19470		1.534E-001	2.1759E-01	7.1164E-02	1.9233E-03	1.9233E-06	grams	kg	0.705
grams							7.1235E-09	7.1235E-12	
8839380		2.7000E+02							
	TH-227			activity mBq	activity mCi	activity Ci	SNM	source	
19470		2.585E-002	2.585E-002	8.4544E-03	2.2850E-04	2.2850E-07	grams	kg	
grams							7.3709E-12	7.3709E-15	
8839380		3.1000E+04							
	Th-228			activity mBq	activity mCi	activity Ci	SNM	source	
19470		1.227E-001	2.2160E-01	7.2475E-02	1.9588E-03	1.9588E-06	grams	kg	
grams							2.3887E-09	2.3887E-12	0.55371
8839380		8.2000E+02							
	Th-230			activity mBq	activity mCi	activity Ci	SNM	source	
19470		1.534E-001	1.1382E-01	3.7227E-02	1.0061E-03	1.0061E-06	grams	kg	
grams							4.7911E-05	4.7911E-08	1.34771
8839380		2.1000E-02							
	TH-232			activity mBq	activity mCi	activity Ci	SNM	source	
19470		1.534E-001	2.1759E-01	7.1164E-02	1.9233E-03	1.9233E-06	grams	kg	0.705
grams							1.7485E+01	1.7485E-02	
8839380		1.1000E-07							
	U-234			activity mBq	activity mCi	activity Ci	SNM	source	
19470		5.148E-001	4.5714E-01	1.4951E-01	4.0408E-03	4.0408E-06	grams	kg	1.12613
grams							6.5175E-04	6.5175E-07	
8839380		6.2000E-03							
	U-235			activity mBq	activity mCi	activity Ci	SNM	source	
19470		1.092E-001	1.3982E-01	4.5729E-02	1.2359E-03	1.2359E-06	grams	kg	0.781
grams							5.6179E-01	5.6179E-04	
8839380		2.2000E-06							
	U-238			activity mBq	activity mCi	activity Ci	SNM	source	
19470		5.148E-001	6.9474E-01	2.2722E-01	6.1410E-03	6.1410E-06	grams	kg	0.741
grams							1.8062E+01	1.8062E-02	
8839380		3.4000E-07							

Totals for all flag 1 data

			corrected	activity mBq	activity mCi	activity Ci	SNM	source	
19470		2.0412E+00	2.3270E+00	7.6950E-01	2.0797E-02	2.0797E-05	grams	kg	flag1 data
			pCi/g	541 will be < than the 540 (MDA not added)			5.6179E-01	3.5548E-02	
154.5238095				data for NORM					
	U-nat		corrected pCi/g	activity mBq	activity mCi	activity Ci		source	
		6.2400E-01	8.3456E-01	2.7295E-01	7.3770E-03	7.3770E-06		kg	
								1.0390E-02	
		7.1000E-07							

	U-nat		corrected pCi/g	activity mBq	activity mCi	[illegible]		source
		2.0412E+00	2.3270E+00	[illegible]	[illegible]	[illegible]		kg total
								[illegible]

norm data

0

container #
9162

shipping check sheet (For Form 540)

	Ac-227		corrected	activity mBq	activity mCi	activity Ci	SNM	source	
		5.639E-002	5.639E-002	1.9703E-02	5.3250E-04	5.3250E-07	grams	kg	
grams			pCi/g				7.3959E-09	7.3959E-12	
9443200		7.2000E+01							
	Pa-231			activity mBq	activity mCi	activity Ci	SNM	source	
20800		1.611E-001	1.611E-001	5.6288E-02	1.5213E-03	1.5213E-06	grams	kg	
grams							3.2368E-05	3.2368E-08	
9443200		4.7000E-02							
	Ra-223			activity mBq	activity mCi	activity Ci	SNM	source	
20800		1.344E-001	1.344E-001	4.6959E-02	1.2692E-03	1.2692E-06	grams	kg	
grams							2.4886E-11	2.4886E-14	
9443200		5.1000E+04							
	Ra-226			activity mBq	activity mCi	activity Ci	SNM	source	
20800		1.495E-001	1.0854E-01	3.7923E-02	1.0249E-03	1.0249E-06	grams	kg	1.37741
grams							1.0249E-06	1.0249E-09	
9443200		1.0000E+00							
	Ra228			activity mBq	activity mCi	activity Ci	SNM	source	
20800		2.001E-001	2.8383E-01	9.9170E-02	2.6803E-03	2.6803E-06	grams	kg	0.705
grams							9.9269E-09	9.9269E-12	
9443200		2.7000E+02							
	TH-227			activity mBq	activity mCi	activity Ci	SNM	source	
20800		5.639E-002	5.639E-002	1.9703E-02	5.3250E-04	5.3250E-07	grams	kg	
grams							1.7177E-11	1.7177E-14	
9443200		3.1000E+04							
	Th-228			activity mBq	activity mCi	activity Ci	SNM	source	
20800		2.143E-001	3.8703E-01	1.3523E-01	3.6548E-03	3.6548E-06	grams	kg	
grams							4.4570E-09	4.4570E-12	0.55371
9443200		8.2000E+02							
	Th-230			activity mBq	activity mCi	activity Ci	SNM	source	
20800		2.001E-001	1.4847E-01	5.1877E-02	1.4021E-03	1.4021E-06	grams	kg	
grams							6.6765E-05	6.6765E-08	1.34771
9443200		2.1000E-02							
	TH-232			activity mBq	activity mCi	activity Ci	SNM	source	
20800		2.001E-001	2.8383E-01	9.9170E-02	2.6803E-03	2.6803E-06	grams	kg	0.705
grams							2.4366E+01	2.4366E-02	
9443200		1.1000E-07							
	U-234			activity mBq	activity mCi	activity Ci	SNM	source	
20800		6.779E-001	6.0197E-01	2.1033E-01	5.6846E-03	5.6846E-06	grams	kg	1.12613
grams							9.1686E-04	9.1686E-07	
9443200		6.2000E-03							
	U-235			activity mBq	activity mCi	activity Ci	SNM	source	
20800		9.372E-002	1.2000E-01	4.1926E-02	1.1332E-03	1.1332E-06	grams	kg	0.781
grams							5.1508E-01	5.1508E-04	
9443200		2.2000E-06							
	U-238			activity mBq	activity mCi	activity Ci	SNM	source	
20800		6.779E-001	9.1484E-01	3.1965E-01	8.6391E-03	8.6391E-06	grams	kg	0.741
grams							2.5409E+01	2.5409E-02	
9443200		3.4000E-07							

Totals for all flag 1 data

			corrected	activity mBq	activity mCi	activity Ci	SNM	source	
20800		2.8219E+00	3.2004E+00	1.1379E+00	3.0755E-02	3.0755E-05	grams	kg	flag1 data
			pCi/g	541 will be < than the 540 (MDA not added)			5.1508E-01	4.9776E-02	
165.0793651				data for NORM					
	U-nat		corrected pCi/g	activity mBq	activity mCi	activity Ci		source	
		7.7162E-01	1.0348E+00	3.6157E-01	9.7722E-03	9.7722E-06		kg	
								1.3764E-02	
		7.1000E-07							

U-nat		corrected pCi/g	activity mBq	activity mCi	activity Ci		source	
	2.8219E+00	3.2004E+00	1.1379E+00	3.0755E-02	3.0755E-05		kg total	norm data
							3.8131E-02	

X

container #
9167

shipping check sheet (For Form 540)

	Ac-227		corrected	activity mBq	activity mCi	activity Ci	SNM	source	
		5.837E-002	5.837E-002	2.0238E-02	5.4696E-04	5.4696E-07	grams	kg	
grams			pCi/g				7.5967E-09	7.5967E-12	
9370560		7.2000E+01							
	Pa-231			activity mBq	activity mCi	activity Ci	SNM	source	
20640		3.886E-001	3.886E-001	1.3473E-01	3.6414E-03	3.6414E-06	grams	kg	
grams							7.7477E-05	7.7477E-08	
9370560		4.7000E-02							
	Ra-223			activity mBq	activity mCi	activity Ci	SNM	source	
20640		4.120E-002	4.120E-002	1.4284E-02	3.8607E-04	3.8607E-07	grams	kg	
grams							7.5699E-12	7.5699E-15	
9370560		5.1000E+04							
	Ra-226			activity mBq	activity mCi	activity Ci	SNM	source	
20640		4.412E-001	3.2031E-01	1.1106E-01	3.0015E-03	3.0015E-06	grams	kg	1.37741
grams							3.0015E-06	3.0015E-09	
9370560		1.0000E+00							
	Ra228			activity mBq	activity mCi	activity Ci	SNM	source	
20640		8.683E-001	1.2316E+00	4.2702E-01	1.1541E-02	1.1541E-05	grams	kg	0.705
grams							4.2745E-08	4.2745E-11	
9370560		2.7000E+02							
	TH-227			activity mBq	activity mCi	activity Ci	SNM	source	
20640		5.837E-002	5.837E-002	2.0238E-02	5.4696E-04	5.4696E-07	grams	kg	
grams							1.7644E-11	1.7644E-14	
9370560		3.1000E+04							
	Th-228			activity mBq	activity mCi	activity Ci	SNM	source	
20640		9.149E-001	1.6523E+00	5.7287E-01	1.5483E-02	1.5483E-05	grams	kg	
grams							1.8882E-08	1.8882E-11	0.55371
9370560		8.2000E+02							
	Th-230			activity mBq	activity mCi	activity Ci	SNM	source	
20640		8.683E-001	6.4428E-01	2.2338E-01	6.0372E-03	6.0372E-06	grams	kg	
grams							2.8749E-04	2.8749E-07	1.34771
9370560		2.1000E-02							
	TH-232			activity mBq	activity mCi	activity Ci	SNM	source	
20640		8.683E-001	1.2316E+00	4.2702E-01	1.1541E-02	1.1541E-05	grams	kg	0.705
grams							1.0492E+02	1.0492E-01	
9370560		1.1000E-07							
	U-234			activity mBq	activity mCi	activity Ci	SNM	source	
20640		1.801E+001	1.5993E+01	5.5449E+00	1.4986E-01	1.4986E-04	grams	kg	1.12613
grams							2.4171E-02	2.4171E-05	
9370560		6.2000E-03							
	U-235			activity mBq	activity mCi	activity Ci	SNM	source	
20640		1.111E+000	1.4225E+00	4.9321E-01	1.3330E-02	1.3330E-05	grams	kg	0.781
grams							6.0591E+00	6.0591E-03	
9370560		2.2000E-06							
	U-238			activity mBq	activity mCi	activity Ci	SNM	source	
20640		1.801E+001	2.4305E+01	8.4268E+00	2.2775E-01	2.2775E-04	grams	kg	0.741
grams							6.6986E+02	6.6986E-01	
9370560		3.4000E-07							

Totals for all flag 1 data

			corrected	activity mBq	activity mCi	activity Ci	SNM	source	
20640		4.1639E+01	4.7289E+01	1.6416E+01	4.4367E-01	4.4367E-04	grams	kg	flag1 data
			pCi/g	541 will be < than the 540 (MDA not added)			6.0591E+00	7.7480E-01	
163.8095238				data for NORM					
	U-nat		corrected pCi/g	activity mBq	activity mCi	activity Ci		source	
		1.9121E+01	2.5728E+01	8.9200E+00	2.4108E-01	2.4108E-04		kg	
								3.3955E-01	
		7.1000E-07							

U-nat		corrected pCi/g	activity mBq	activity mCi	activity Ci		source	
	4.1639E+01	4.7289E+01	1.6416E+01	4.4367E-01	4.4367E-04		kg total	norm data
							4.4449E-01	

X

container #
9168

shipping check sheet (For Form 540)

	Ac-227		corrected	activity mBq	activity mCi	activity Ci	SNM	source	
		4.154E-002	4.154E-002	1.5589E-02	4.2131E-04	4.2131E-07	grams	kg	
grams			pCi/g				5.8516E-09	5.8516E-12	
10142360		7.2000E+01							
	Pa-231			activity mBq	activity mCi	activity Ci	SNM	source	
22340		2.279E-001	2.279E-001	8.5523E-02	2.3114E-03	2.3114E-06	grams	kg	
grams							4.9180E-05	4.9180E-08	
10142360		4.7000E-02							
	Ra-223			activity mBq	activity mCi	activity Ci	SNM	source	
22340		5.248E-002	5.248E-002	1.9694E-02	5.3227E-04	5.3227E-07	grams	kg	
grams							1.0437E-11	1.0437E-14	
10142360		5.1000E+04							
	Ra-226			activity mBq	activity mCi	activity Ci	SNM	source	
22340		4.329E-001	3.1429E-01	1.1794E-01	3.1876E-03	3.1876E-06	grams	kg	1.37741
grams							3.1876E-06	3.1876E-09	
10142360		1.0000E+00							
	Ra228			activity mBq	activity mCi	activity Ci	SNM	source	
22340		8.888E-001	1.2607E+00	4.7310E-01	1.2787E-02	1.2787E-05	grams	kg	0.705
grams							4.7358E-08	4.7358E-11	
10142360		2.7000E+02							
	TH-227			activity mBq	activity mCi	activity Ci	SNM	source	
22340		4.154E-002	4.154E-002	1.5589E-02	4.2131E-04	4.2131E-07	grams	kg	
grams							1.3591E-11	1.3591E-14	
10142360		3.1000E+04							
	Th-228			activity mBq	activity mCi	activity Ci	SNM	source	
22340		8.716E-001	1.5741E+00	5.9071E-01	1.5965E-02	1.5965E-05	grams	kg	
grams							1.9470E-08	1.9470E-11	0.55371
10142360		8.2000E+02							
	Th-230			activity mBq	activity mCi	activity Ci	SNM	source	
22340		8.888E-001	6.5949E-01	2.4748E-01	6.6888E-03	6.6888E-06	grams	kg	
grams							3.1851E-04	3.1851E-07	1.34771
10142360		2.1000E-02							
	TH-232			activity mBq	activity mCi	activity Ci	SNM	source	
22340		8.888E-001	1.2607E+00	4.7310E-01	1.2787E-02	1.2787E-05	grams	kg	0.705
grams							1.1624E+02	1.1624E-01	
10142360		1.1000E-07							
	U-234			activity mBq	activity mCi	activity Ci	SNM	source	
22340		1.720E+001	1.5274E+01	5.7317E+00	1.5491E-01	1.5491E-04	grams	kg	1.12613
grams							2.4985E-02	2.4985E-05	
10142360		6.2000E-03							
	U-236			activity mBq	activity mCi	activity Ci	SNM	source	
22340		8.818E-001	1.1291E+00	4.2370E-01	1.1451E-02	1.1451E-05	grams	kg	0.781
grams							5.2052E+00	5.2052E-03	
10142360		2.2000E-06							
	U-238			activity mBq	activity mCi	activity Ci	SNM	source	
22340		1.720E+001	2.3212E+01	8.7107E+00	2.3542E-01	2.3542E-04	grams	kg	0.741
grams							6.9242E+02	6.9242E-01	
10142360		3.4000E-07							

Totals for all flag 1 data

			corrected	activity mBq	activity mCi	activity Ci	SNM	source	
22340		3.9616E+01	4.5006E+01	1.6905E+01	4.5689E-01	4.5689E-04	grams	kg	flag1 data
			pCi/g	541 will be < than the 540 (MDA not added)			5.2052E+00	8.0869E-01	
177.5015873				data for NORM					
	U-nat		corrected pCi/g	activity mBq	activity mCi	activity Ci		source	
		1.8082E+01	2.4341E+01	9.1344E+00	2.4687E-01	2.4687E-04		kg	
								3.4771E-01	
		7.1000E-07							

U-nat		corrected pCi/g	activity mBq	activity mCi	activity Ci		source	
	3.9616E+01	4.5006E+01	1.6905E+01	4.5689E-01	4.5689E-04		kg total	norm data
							4.0869E-01	

X

container #
9193

shipping check sheet (For Form 540)

	Ac-227		corrected	activity mBq	activity mCi	activity Ci	SNM	source	
		3.458E-002	3.458E-002	6.7672E-03	1.8290E-04	1.8290E-07	grams	kg	
grams			pCi/g				2.5402E-09	2.5402E-12	
5289100		7.2000E+01							
	Pa-231			activity mBq	activity mCi	activity Ci	SNM	source	
11650		1.823E-001	1.823E-001	3.5676E-02	9.6420E-04	9.6420E-07	grams	kg	
grams							2.0515E-05	2.0515E-08	
5289100		4.7000E-02							
	Ra-223			activity mBq	activity mCi	activity Ci	SNM	source	
11650		4.394E-002	4.394E-002	8.5989E-03	2.3240E-04	2.3240E-07	grams	kg	
grams							4.5569E-12	4.5569E-15	
5289100		5.1000E+04							
	Ra-226			activity mBq	activity mCi	activity Ci	SNM	source	
11650		2.473E-001	1.7954E-01	3.5135E-02	9.4960E-04	9.4960E-07	grams	kg	1.37741
grams							9.4960E-07	9.4960E-10	
5289100		1.0000E+00							
	Ra228			activity mBq	activity mCi	activity Ci	SNM	source	
11650		3.585E-001	5.0851E-01	9.9514E-02	2.6896E-03	2.6896E-06	grams	kg	0.705
grams							9.9613E-09	9.9613E-12	
5289100		2.7000E+02							
	TH-227			activity mBq	activity mCi	activity Ci	SNM	source	
11650		3.458E-002	3.458E-002	6.7672E-03	1.8290E-04	1.8290E-07	grams	kg	
grams							5.8999E-12	5.8999E-15	
5289100		3.1000E+04							
	Th-228			activity mBq	activity mCi	activity Ci	SNM	source	
11650		2.909E-001	5.2537E-01	1.0281E-01	2.7787E-03	2.7787E-06	grams	kg	
grams							3.3887E-09	3.3887E-12	0.55371
5289100		8.2000E+02							
	Th-230			activity mBq	activity mCi	activity Ci	SNM	source	
11650		3.585E-001	2.6601E-01	5.2057E-02	1.4069E-03	1.4069E-06	grams	kg	
grams							6.6997E-05	6.6997E-08	1.34771
5289100		2.1000E-02							
	TH-232			activity mBq	activity mCi	activity Ci	SNM	source	
11650		3.585E-001	5.0851E-01	9.9514E-02	2.6896E-03	2.6896E-06	grams	kg	0.705
grams							2.4451E+01	2.4451E-02	
5289100		1.1000E-07							
	U-234			activity mBq	activity mCi	activity Ci	SNM	source	
11650		2.494E+000	2.2147E+00	4.3340E-01	1.1714E-02	1.1714E-05	grams	kg	1.12613
grams							1.8893E-03	1.8893E-06	
5289100		6.2000E-03							
	U-235			activity mBq	activity mCi	activity Ci	SNM	source	
11650		1.202E-001	1.5391E-01	3.0119E-02	8.1402E-04	8.1402E-07	grams	kg	0.781
grams							3.7001E-01	3.7001E-04	
5289100		2.2000E-06							
	U-238			activity mBq	activity mCi	activity Ci	SNM	source	
11650		2.494E+000	3.3657E+00	6.5866E-01	1.7802E-02	1.7802E-05	grams	kg	0.741
grams							5.2358E+01	5.2358E-02	
5289100		3.4000E-07							

Totals for all flag 1 data

			corrected	activity mBq	activity mCi	activity Ci	SNM	source	
11650		7.0173E+00	7.9830E+00	1.5690E+00	4.2406E-02	4.2406E-05	grams	kg	flag1 data
[redacted]			pCi/g	541 will be < than the 540 (MDA not added)			3.7001E-01	7.6810E-02	
				data for NORM					
	U-nat		corrected pCi/g	activity mBq	activity mCi	activity Ci		source	
		2.6142E+00	3.5196E+00	6.8878E-01	1.8616E-02	1.8616E-05		kg	
								2.6219E-02	
		7.1000E-07							

	U-nat		corrected pCi/g	activity mBq	activity mCi	activity Ci		source	
		7.0173E+00	7.9830E+00	[redacted]	4.2406E-02	4.2406E-05		kg total	norm data
								5.0972E-02	

X

Posillico Bros. Asphalt Co.

1610 New Highway, Farmingdale, N.Y. 11735
Plant Tele: 293-2620, 2621

HOT STORAGE

%9

15:45 4-18-05 TICKET NUMBER 9224

17110 lb GROSS

Posillico Bros. Asphalt Co.

1610 New Highway, Farmingdale, N.Y. 11735
Plant Tele: 293-2620, 2621

HOT STORAGE

15:27 10-05-04 TICKET NUMBER 9142

18150 lb GROSS

Posillico Bros. Asphalt Co.

1610 New Highway, Farmingdale, N.Y. 11735
Plant Tele: 293-2620, 2621

HOT STORAGE

16:13 10-27-04 TICKET NUMBER 9149

12120 lb GROSS

Posillico Bros. Asphalt Co.

1610 New Highway, Farmingdale, N.Y. 11735
Plant Tele: 293-2620, 2621

HOT STORAGE

15:25 11-11-04 TICKET NUMBER 9150

20140 lb GROSS

Posillico Bros. Asphalt Co.

1610 New Highway, Farmingdale, N.Y. 11735
Plant Tele: 293-2620, 2621

HOT STORAGE

7:37 4-22-05 TICKET NUMBER 9193

11730 lb GROSS

FORM 540 — **Envirocare of Utah, Inc.**

UNIFORM LOW-LEVEL RADIOACTIVE WASTE MANIFEST

SHIPPING PAPER

1. EMERGENCY TELEPHONE NUMBER (Include Area Code): 1-800-424-9300

ORGANIZATION: Chemtrec

2. IS THIS AN "EXCLUSIVE USE" SHIPMENT? ☐ YES ☑ NO

3. TOTAL NUMBER OF PACKAGES IDENTIFIED ON THIS MANIFEST ==> 11

4. DOES EPA REGULATED WASTE REQUIRING A MANIFEST ACCOMPANY THIS SHIPMENT? ☐ YES ☑ NO
If "Yes," provide Manifest Number ==>

EPA MANIFEST NUMBER

5. SHIPPER – NAME AND FACILITY
GTEOSI
140 Cantiague Rock RD
Hicksville, NY 11801

SHIPPER I.D. NUMBER: 0840-01-982

☐ COLLECTOR
☐ PROCESSOR
☑ GENERATOR TYPE (Specify) I

Utah Generator Site Access Permit No.: 020 500 1352

SHIPMENT NUMBER: NHRX1032

CONTACT: Jean Agostinelli

TELEPHONE NUMBER (Include Area Code): 516-832-9157

6. CARRIER – Name and Address
Priority Transport Services, Inc.
391 Anthony Street
Schenectady, NY 12308

EPA I.D. NUMBER: NYR000104976

SHIPPING DATE: 05/19/2005

CONTACT: Dispatch

TELEPHONE (Include Area Code): 800-235-0069

SIGNATURE – Authorized carrier acknowledging waste receipt

DATE: 5-19-05

7. FORM 540 AND 540A — PAGE 1 OF 3 PAGE(S)
FORM 541 AND 541A — 6 PAGE(S)
FORM 542 AND 542A — None PAGE(S)
ADDITIONAL INFORMATION — None PAGE(S)

8. MANIFEST NUMBER (Use this number on all continuation pages): 0840-01-982

9. CONSIGNEE - Name and Facility
Envirocare of Utah, Inc.
Clive Disposal Site (Bulk Waste Facility)
Interstate 80, Exit 49
Clive, UT 84029

184895

CONTACT: Shipping and Receiving

TELEPHONE (Include Area Code): (435)884-0155

SIGNATURE – Authorized consignee acknowledging waste receipt

DATE: 6-3-05

10. CERTIFICATION

This is to certify that the herein-named materials are properly classified, described, packaged, marked, and labeled and are in proper condition for transportation according to the applicable regulations of the Department of Transportation. This also certifies that the materials are classified, packaged, marked, and labeled and are in proper condition for transportation and disposal as described in accordance with the requirements of 10 CFR Parts 20 and 61, or equivalent state regulations.

AUTHORIZED SIGNATURE | TITLE: Broker | DATE: 5-19-05

11. U.S. DEPARTMENT OF TRANSPORTATION DESCRIPTION (Including proper shipping name, hazard class, UN ID number, and any additional information)	12. DOT LABEL "RADIOACTIVE"	13. TRANSPORT INDEX	14. PHYSICAL AND CHEMICAL FORM	15. INDIVIDUAL RADIONUCLIDES	16. TOTAL PACKAGE ACTIVITY MBq	mCi	17. LSA/SCO CLASS	18. TOTAL WEIGHT OR VOLUME (Use appropriate units)	19. IDENTIFICATION NUMBER OF PACKAGE
Soil,DOT Non-Regulated, containing Radionuclides	NA	NA	Solid / OXIDES	Ac-227 Pa-231 Ra-223 Ra-226 Ra-228 Th-227 Th-228 Th-230	1.1671E+01	3.1544E-01	NA	13430 LBS; 105.95 FT3	9129
				Th-232 U-234 U-Nat					
Soil,DOT Non-Regulated, containing Radionuclides	NA	NA	Solid / OXIDES	Ac-227 Pa-231 Ra-223 Ra-226 Ra-228 Th-227 Th-228 Th-230	1.2555E+00	3.3933E-02	NA	16630 LBS; 131.35 FT3	9164
				Th-232 U-234 U-Nat					
Soil,DOT Non-Regulated, containing Radionuclides	NA	NA	Solid / OXIDES	Ac-227 Pa-231 Ra-223 Ra-226 Ra-228 Th-227 Th-228 Th-230	6.9968E-01	1.8910E-02	NA	11620 LBS; 91.59 FT3	9166
				Th-232 U-234 U-Nat					

FOR CONSIGNEE USE ONLY

- ___ Record Waste Description Inadequate
- ___ Contamination or Leakage Detected
- ___ Unexpected Exposure Rates Detected
- ___ Labels, Markings, etc. Inadequate
- ___ Container Integrity Inadequate
- ___ Other
- ✓ No Violations Detected on this Shipment

20. TERMS AND CONDITIONS

A. HAZARDOUS MATERIALS: Generator represents & warrants that Waste Material __ is (or) ✓ is not a hazardous waste as defined in 40 CFR 261. Where the material is a hazardous waste, this shipment is also accompanied by a separate and completed hazardous waste manifest, along with the appropriate land-disposal restriction notice and/or certification as required by 40 CFR 268.1.

B. TITLE: Upon acceptance at the disposal site by Envirocare of Utah, Inc., and all appropriate regulatory authorities, title to the Waste Material which conforms to Generator's representations herein shall thereupon transfer from Generator and be vested in Envirocare of Utah, Inc.

C. WASTE MATERIAL: Generator represents and warrants that all data set forth in this (UNIFORM LOW-LEVEL RADIOACTIVE WASTE MANIFEST) are true and correct in all respects and in accordance with all applicable governmental laws, rules, regulations and Envirocare of Utah Inc.'s facility license.

D. INDEMNIFICATION: Generator agrees to indemnify Envirocare of Utah, Inc., its officers, employees and agents against all losses and liability whatsoever if such losses or liability results from the failure of the Waste Material to conform in all material respects to the data supplied on the (UNIFORM LOW-LEVEL RADIOACTIVE WASTE MANIFEST,) or if this shipment fails to meet the standards prescribed by the Department of Transportation or any governmental agency having jurisdiction over such matters.

FORM 540 (04-03)

FORM 540 — **Envirocare of Utah, Inc.**

UNIFORM LOW-LEVEL RADIOACTIVE WASTE MANIFEST

SHIPPING PAPER

1. EMERGENCY TELEPHONE NUMBER (Include Area Code): 1-800-424-9300

ORGANIZATION: Chemtrec

2. IS THIS AN "EXCLUSIVE USE" SHIPMENT? ☐ YES ☑ NO

3. TOTAL NUMBER OF PACKAGES IDENTIFIED ON THIS MANIFEST =====> 11

4. DOES EPA REGULATED WASTE REQUIRING A MANIFEST ACCOMPANY THIS SHIPMENT? ☐ YES ☑ NO
If "Yes," provide Manifest Number =====>

EPA MANIFEST NUMBER

5. SHIPPER -- NAME AND FACILITY
GTEOSI
140 Cantiague Rock RD
Hicksville, NY 11801

SHIPPER I.D. NUMBER: 0840-01-982
☐ COLLECTOR
☐ PROCESSOR

Utah Generator Site Access Permit No.: 020 500 1352
SHIPMENT NUMBER: NHRX1032
☑ GENERATOR TYPE (Specify) I

CONTACT: Jean Agostinelli
TELEPHONE NUMBER (Include Area Code): 516-932-9157

6. CARRIER -- Name and Address
Priority Transport Services, Inc.
391 Anthony Street
Schenectady, NY 12308

EPA I.D. NUMBER: NYR000104976
SHIPPING DATE: 05/19/2005

CONTACT: Dispatch
TELEPHONE (Include Area Code): 800-235-0069

SIGNATURE -- Authorized carrier acknowledging waste receipt
DATE: 5-19-05

7. FORM 540 AND 540A — PAGE 1 OF 3 PAGE(S)
FORM 541 AND 541A — 6 PAGE(S)
FORM 542 AND 542A — None PAGE(S)
ADDITIONAL INFORMATION — None PAGE(S)

8. MANIFEST NUMBER (Use this number on all continuation pages): 0840-01-982

9. CONSIGNEE - Name and Facility
Envirocare of Utah, Inc.
Clive Disposal Site (Bulk Waste Facility)
Interstate 80, Exit 49
Clive, UT 84029

CONTACT: Shipping and Receiving
TELEPHONE (Include Area Code): (435)884-0155

SIGNATURE -- Authorized consignee acknowledging waste receipt
DATE

10. CERTIFICATION
This is to certify that the herein-named materials are properly classified, described, packaged, marked, and labeled and are in proper condition for transportation according to the applicable regulations of the Department of Transportation. This also certifies that the materials are classified, packaged, marked, and labeled and are in proper condition for transportation and disposal as described in accordance with the requirements of 10 CFR Parts 20 and 61, or equivalent state regulations.

AUTHORIZED SIGNATURE: [signature] — TITLE: Broker — DATE: 5-19-05

11. U.S. DEPARTMENT OF TRANSPORTATION DESCRIPTION (Including proper shipping name, hazard class, UN ID number, and any additional information)	12. DOT LABEL "RADIOACTIVE"	13. TRANSPORT INDEX	14. PHYSICAL AND CHEMICAL FORM	15. INDIVIDUAL RADIONUCLIDES	16. TOTAL PACKAGE ACTIVITY MBq	mCi	17. LSA/SCO CLASS	18. TOTAL WEIGHT OR VOLUME (Use appropriate units)	19. IDENTIFICATION NUMBER OF PACKAGE
Soil,DOT Non-Regulated, containing Radionuclides	NA	NA	Solid / OXIDES	Ac-227 Pa-231 Ra-223 Ra-226 Ra-228 Th-227 Th-228 Th-230 Th-232 U-234 U-Nat	1.1671E+01	3.1544E-01	NA	13430 LBS; 105.95 FT3	9129
Soil,DOT Non-Regulated, containing Radionuclides	NA	NA	Solid / OXIDES	Ac-227 Pa-231 Ra-223 Ra-226 Ra-228 Th-227 Th-228 Th-230 Th-232 U-234 U-Nat	1.2555E+00	3.3933E-02	NA	16630 LBS; 131.35 FT3	9164
Soil,DOT Non-Regulated, containing Radionuclides	NA	NA	Solid / OXIDES	Ac-227 Pa-231 Ra-223 Ra-226 Ra-228 Th-227 Th-228 Th-230 Th-232 U-234 U-Nat	6.9968E-01	1.8910E-02	NA	11620 LBS; 91.59 FT3	9166

FOR CONSIGNEE USE ONLY

____ Record Waste Description Inadequate
____ Contamination or Leakage Detected
____ Unexpected Exposure Rates Detected
____ Labels, Markings, etc. Inadequate
____ Container Integrity Inadequate
____ Other
____ No Violations Detected on this Shipment

20. TERMS AND CONDITIONS

A. HAZARDOUS MATERIALS: Generator represents & warrants that Waste Material __ is (or) ✓ is not a hazardous waste as defined in 40 CFR 261. Where the material is a hazardous waste, this shipment is also accompanied by a separate and completed hazardous waste manifest, along with the appropriate land-disposal restriction notice and/or certification as required by 40 CFR 268.1.

B. TITLE: Upon acceptance at the disposal site by Envirocare of Utah, Inc., and all appropriate regulatory authorities, title to the Waste Material which conforms to Generator's representations herein shall thereupon transfer from Generator and be vested in Envirocare of Utah, Inc.

C. WASTE MATERIAL: Generator represents and warrants that all data set forth in this (UNIFORM LOW-LEVEL RADIOACTIVE WASTE MANIFEST) are true and correct in all respects and in accordance with all applicable governmental laws, rules, regulations and Envirocare of Utah Inc.'s facility license.

D. INDEMNIFICATION: Generator agrees to indemnify Envirocare of Utah, Inc., its officers, employees and agents against all losses and liability whatsoever if such losses or liability results from the failure of the Waste Material to conform in all material respects to the data supplied on the (UNIFORM LOW-LEVEL RADIOACTIVE WASTE MANIFEST,) or if this shipment fails to meet the standards prescribed by the Department of Transportation or any governmental agency having jurisdiction over such matters.

FORM 540A

Envirocare of Utah, Inc.

UNIFORM LOW-LEVEL RADIOACTIVE WASTE MANIFEST

SHIPPING PAPER (CONTINUATION)

8. MANIFEST NUMBER
(Use this number on all continuation pages)
0840-01-982

11. U.S. DEPARTMENT OF TRANSPORTATION DESCRIPTION (Including proper shipping name, hazard class, UN ID number, and any additional information)	12. DOT LABEL "RADIOACTIVE"	13. TRANSPORT INDEX	14. PHYSICAL AND CHEMICAL FORM	15. INDIVIDUAL RADIONUCLIDES				16. TOTAL PACKAGE ACTIVITY MBq	mCi	17. LSA/SCO CLASS	18. TOTAL WEIGHT OR VOLUME (Use appropriate units)	19. IDENTIFICATION NUMBER OF PACKAGE
Soil,DOT Non-Regulated, containing Radionuclides	NA	NA	Solid / OXIDES	Ac-227	Pa-231	Ra-223	Ra-226	1.9948E+01	5.3913E-01	NA	21950 LBS; 173.57 FT3	9169
				Ra-228	Th-227	Th-228	Th-230					
				Th-232	U-234	U-Nat						
Soil,DOT Non-Regulated, containing Radionuclides	NA	NA	Solid / OXIDES	Ac-227	Pa-231	Ra-223	Ra-226	5.2442E+01	1.4173E+00	NA	21290 LBS; 168.33 FT3	9172
				Ra-228	Th-227	Th-228	Th-230					
				Th-232	U-234	U-Nat						
Soil,DOT Non-Regulated, containing Radionuclides	NA	NA	Solid / OXIDES	Ac-227	Pa-231	Ra-223	Ra-226	8.1684E+00	2.2077E-01	NA	19880 LBS; 157.14 FT3	9173
				Ra-228	Th-227	Th-228	Th-230					
				Th-232	U-234	U-Nat						
Soil,DOT Non-Regulated, containing Radionuclides	NA	NA	Solid / OXIDES	Ac-227	Pa-231	Ra-223	Ra-226	1.3440E+01	3.6325E-01	NA	17020 LBS; 134.44 FT3	9174
				Ra-228	Th-227	Th-228	Th-230					
				Th-232	U-234	U-Nat						
Soil,DOT Non-Regulated, containing Radionuclides	NA	NA	Solid / OXIDES	Ac-227	Pa-231	Ra-223	Ra-226	3.8871E+00	1.0506E-01	NA	18790 LBS; 148.49 FT3	9175
				Ra-228	Th-227	Th-228	Th-230					
				Th-232	U-234	U-Nat						
Soil,DOT Non-Regulated, containing Radionuclides	NA	NA	Solid / OXIDES	Ac-227	Pa-231	Ra-223	Ra-226	8.2237E-01	2.2226E-02	NA	15700 LBS; 123.97 FT3	9180
				Ra-228	Th-227	Th-228	Th-230					
				Th-232	U-234	U-Nat						
Soil,DOT Non-Regulated, containing Radionuclides	NA	NA	Solid / OXIDES	Ac-227	Pa-231	Ra-223	Ra-226	1.4571E+00	3.9382E-02	NA	13560 LBS; 106.98 FT3	9213
				Ra-228	Th-227	Th-228	Th-230					

FORM 540A

Envirocare of Utah, Inc.

UNIFORM LOW-LEVEL RADIOACTIVE WASTE MANIFEST

SHIPPING PAPER (CONTINUATION)

8. MANIFEST NUMBER
(Use this number on all continuation pages)
0840-01-982

11. U.S. DEPARTMENT OF TRANSPORTATION DESCRIPTION (Including proper shipping name, hazard class, UN ID number, and any additional information)	12. DOT LABEL "RADIOACTIVE"	13. TRANSPORT INDEX	14. PHYSICAL AND CHEMICAL FORM	15. INDIVIDUAL RADIONUCLIDES				16. TOTAL PACKAGE ACTIVITY MBq	mCi	17. LSA/SCO CLASS	18. TOTAL WEIGHT OR VOLUME (Use appropriate units)	19. IDENTIFICATION NUMBER OF PACKAGE
Soil,DOT Non-Regulated, containing Radionuclides	NA	NA	Solid / OXIDES	Th-232	U-234	U-Nat		1.4571E+00	3.9382E-02	NA	13560 LBS; 106.98 FT3	9213
Soil,DOT Non-Regulated, containing Radionuclides	NA	NA	Solid / OXIDES	Ac-227	Pa-231	Ra-223	Ra-226	1.2722E+00	3.4385E-02	NA	21010 LBS; 166.11 FT3	9218
				Ra-228	Th-227	Th-228	Th-230					
				Th-232	U-234	U-Nat						

FORM 541

Envirocare of Utah, Inc.

UNIFORM LOW-LEVEL RADIOACTIVE WASTE MANIFEST

CONTAINER AND WASTE DESCRIPTION

Additional Nuclear Regulatory Commission (NRC) Requirements for Control, Transfer and Disposal of Radioactive Waste

1. MANIFEST TOTALS

NUMBER OF PACKAGES/ DISPOSAL CONTAINERS	NET WASTE VOLUME		NET WASTE WEIGHT		SPECIAL NUCLEAR MATERIAL (grams) U-233	U-235	Pu	Total
11	m3	42.6995	kg	86182.5560	NP	NP	NP	NP
	ft3	1507.9200	ton	95.0000				

ACTIVITY	ALL NUCLIDES	TRITIUM	C-14	Tc-99	I-129	SOURCE (kg)	
MBq	1.1391E+02	NP	NP	NP	NP	(kg)	3.0835E+00
mCi	3.0785E+00	NP	NP	NP	NP	(tons)	3.3990E-03

2. MANIFEST NUMBER 0840-01-982

3. PAGE 1 OF 6 PAGE(S)

4. SHIPPER NAME GTEOSI

SHIPMENT ID NUMBER 0840-01-982

DISPOSAL CONTAINER DESCRIPTION							WASTE DESCRIPTION FOR EACH WASTE TYPE IN CONTAINER										
5. CONTAINER IDENTIFICATION NUMBER/ GENERATOR ID NUMBER(S)	6. CONTAINER DESCRIPTION (See Note 1 & Note 1A)	7. VOLUME (m3)/(ft3)	8. WASTE AND CONTAINER WEIGHT (kg)/(ton)	9. SURFACE RADIATION LEVEL (mSv/hr)/(mrem/hr)	10. SURFACE CONTAMINATION (MBq/100 cm2)/(dpm/100cm2) ALPHA	BETA-GAMMA	PHYSICAL DESCRIPTION 11. WASTE DESCRIPTOR (See Note 2 & Note 2A)	12. APPROXIMATE WASTE VOLUME(S) IN CONTAINER (m3)/(FT3)	13. SOLIDIFICATION OR STABILIZATION MEDIA (See Note 3)	14. CHEMICAL DESCRIPTION CHEMICAL FORM/ CHELATING AGENT	WEIGHT % CHELATING AGENT IF > 0.1%	15. RADIOLOGICAL DESCRIPTION INDIVIDUAL RADIONUCLIDES AND ACTIVITY (MBq) AND CONTAINER TOTAL; OR CONTAINER TOTAL ACTIVITY AND RADIONUCLIDE PERCENT: RADIONUCLIDES	pCi/gm	MBq	mCi	16. WASTE CLASSIFICATION AS-Class A Stable AU-Class A Unstable B-Class B C-Class C
9129/GTEOSI	19 Strong Tight Container Loaded in Gondola	3.0002	6091.7459	0.0001	<3.6740E-06	<3.6740E-05	22,59-CONCRETE,59 -MISC DEBRIS-HJ	3.0002	100	OXIDES/NONE	0.00	Ac-227	3.48300E-02	(7.8107E-03)	(2.1110E-04)	AU
		105.9500	6.7150	0.0100	<2.2000E+02	<2.2000E+03		105.9500				Pa-231	1.67300E-01	(3.7518E-02)	(1.0140E-03)	
												Ra-223	9.49000E-02	2.1282E-02	5.7518E-04	
												Ra-226	1.70174E-01	3.8162E-02	1.0314E-03	
												Ra-228	1.11277E+00	2.4954E-01	6.7444E-03	
												Th-227 [6.8097E-15 kg]	3.48300E-02	(7.8107E-03)	(2.1110E-04)	
												Th-228 [1.1654E-11 kg]	1.57664E+00	3.5356E-01	9.5558E-03	
												Th-230 [1.6800E-07 kg]	5.82099E-01	1.3054E-01	3.5280E-03	
												Th-232 [6.1312E-02 kg]	1.11277E+00	2.4954E-01	6.7444E-03	
												U-234 [1.7674E-05 kg]	1.80796E+01	4.0545E+00	1.0958E-01	
												U-Nat [2.4824E-01 kg]	2.90795E+01	6.5213E+00	1.7625E-01	
												Subtotal		1.1618E+01	3.1401E-01	
												Total		1.1618E+01	3.1401E-01	
												Source [3.0957E-01 kg]				
9164/GTEOSI	19 Strong Tight Container Loaded in Gondola	3.7194	7543.2416	0.0001	<3.6740E-06	<3.6740E-05	22,59-CONCRETE,59 -MISC DEBRIS-HJ	3.7194	100	OXIDES/NONE	0.00	Ac-227	4.20800E-02	(1.1699E-02)	(3.1618E-04)	AU
		131.3500	8.3150	0.0100	<2.2000E+02	<2.2000E+03		131.3500				Pa-231	1.38300E-01	(3.8447E-02)	(1.0391E-03)	
												Ra-223	6.93700E-02	1.9286E-02	5.2123E-04	
												Ra-226	1.16233E-01	3.2314E-02	8.7334E-04	
												Ra-228	3.76596E-01	1.0470E-01	2.8296E-03	
												Th-227 [1.0199E-14 kg]	4.20800E-02	(1.1699E-02)	(3.1618E-04)	
												Th-228 [3.2021E-12 kg]	3.49461E-01	9.7151E-02	2.6257E-03	
												Th-230 [7.0486E-08 kg]	1.97001E-01	5.4767E-02	1.4802E-03	
												Th-232 [2.5724E-02 kg]	3.76596E-01	1.0470E-01	2.8296E-03	

Note 1: Container Description Codes. For containers/ waste requiring disposal in approved structural over-packs the numerical code must be followed by "-OP."

1. Wooden Box or Crate
2. Metal Box
3. Plastic Drum or Pail
4. Metal Drum or Pail
5. Metal Tank or Liner
6. Concrete Tank or Liner
7. Polyethlene Tank or Liner
8. Fiberglass Tank or Liner
9. Demineralizer
10. Gas Cylinder
11. Bulk, Unpackaged Waste
12. Unpackaged Components
13. High Integrity Container
19. Other. Describe in Item 6, or additional page

Note 1A: Bulk Packaging Description Codes. (Choose one code as may be applicable.)

A Gondola
B Intermodal
C End-Dump
D Roll-off
E Seavan

NOTE 2: Waste Descriptor Codes. (Choose up to three which predominate by volume.)

20. Charcoal
21. Incinerator Ash
22. Soil
23. Gas
24. Oil
25. Aqueous Liquid
26. Filter Media
27. Mechanical Filter
28. EPA or State Hazardous
29. Demolition Rubble
30. Cation Ion-exchange Media
31. Anion Ion-exchange Media
32. Mixed Bed Ion-exchange Media
33. Contaminated Equipment
34. Organic Liquid (except oil)
35. Glassware or Labware
36. Sealed Source/Device
37. Paint or Plating
38. Evaporator Bottoms/Sludges/ Concentrates
39. Compactible Trash
40. Noncompactible Trash
41. Animal Carcass
42. Biological Material (except animal carcass)
43. Activated Material
59. Other. Describe in item 11, or additional page

NOTE 2A: Specific Waste Descriptions (Choose all applicable codes.)

G Dewatered
H Solid
I Combustible
J Non-combustible
K Air Filtration Filters
L Asbestos

Note3: Solidification and Stabilization Media Codes. (Choose up to three which predominate by volume.) For media meeting disposal site structural stability requirements, the numerical code must be followed by "-S." and the media vendor and brand name must also be identified

In Item 13. Code 100=NONE REQUIRED.

Solidification

90. Cement
91. Concrete (encapsulation)
92. Bitumen
93. Vinyl Chloride
94. Vinyl Ester Styrene
99. Other. Describe in item 13, or additional page
100. None Required.

FORM 541 (04-03)

FORM 541A

UNIFORM LOW-LEVEL RADIOACTIVE WASTE MANIFEST

CONTAINER AND WASTE DESCRIPTION (CONTINUATION)

Envirocare of Utah, Inc.

2. MANIFEST NUMBER 0840-01-982

DISPOSAL CONTAINER DESCRIPTION							WASTE DESCRIPTION FOR EACH WASTE TYPE IN CONTAINER									
							PHYSICAL DESCRIPTION			14. CHEMICAL DESCRIPTION		15. RADIOLOGICAL DESCRIPTION				16. WASTE CLASSIFICATION AS-Class A Stable AU-Class A Unstable B-Class B C-Class C
5. CONTAINER IDENTIFICATION NUMBER/ GENERATOR ID NUMBER(S)	6. CONTAINER DESCRIPTION (See Note 1 & Note 1A)	7. VOLUME (m3)/(ft3)	8. WASTE AND CONTAINER WEIGHT (kg)/(ton)	9. SURFACE RADIATION LEVEL (mSv/hr)/(mrem/hr)	10. SURFACE CONTAMINATION (MBq/100 cm2)/(dpm/100cm2) ALPHA	BETA-GAMMA	11. WASTE DESCRIPTOR (See Note 2 & Note 2A)	12. APPROXIMATE WASTE VOLUME(S) IN CONTAINER (m3)/(FT3)	13. SOLIDIFICATION OR STABILIZATION MEDIA (See Note 3)	CHEMICAL FORM/ CHELATING AGENT	WEIGHT % CHELATING AGENT IF > 0.1%	INDIVIDUAL RADIONUCLIDES AND ACTIVITY (MBq) AND CONTAINER TOTAL; OR CONTAINER TOTAL ACTIVITY AND RADIONUCLIDE PERCENT: RADIONUCLIDES	pCi/gm	MBq	mCi	
												U-234 [1.2236E-06 kg]	1.00965E+00	2.8069E-01	7.5862E-03	
												U-Nat [1.9036E-02 kg]	1.79882E+00	5.0009E-01	1.3516E-02	
												Subtotal		1.1937E+00	3.2262E-02	
												Total		1.1937E+00	3.2262E-02	
												Source [4.4761E-02 kg]				
9166/GTEOSI	19 Strong Tight Container Loaded in Gondola	2.5935	5270.7437	0.0001	<3.6740E-06	<3.6740E-05	22,59-CONCRETE,59 -MISC DEBRIS-HJ	2.5935	100	OXIDES/NONE	0.00	Ac-227	3.96600E-02	7.6882E-03	2.0779E-04	AU
												Pa-231	1.77500E-01	(3.4408E-02)	(9.2995E-04)	
												Ra-223	3.18500E-02	(6.1742E-03)	(1.6687E-04)	
		91.5900	5.8100	0.0070	<2.2000E+02	<2.2000E+03		91.5900				Ra-226	1.23275E-01	2.3897E-02	6.4586E-04	
												Ra-228	3.15745E-01	6.1205E-02	1.6542E-03	
												Th-227 [6.7027E-15 kg]	3.96600E-02	7.6882E-03	2.0779E-04	
												Th-228 [2.6643E-12 kg]	4.17005E-01	8.0838E-02	2.1848E-03	
												Th-230 [4.1207E-08 kg]	1.65169E-01	3.2018E-02	8.6535E-04	
												Th-232 [1.5039E-02 kg]	3.15745E-01	6.1205E-02	1.6542E-03	
												U-234 [5.8860E-07 kg]	6.96545E-01	1.3502E-01	3.6493E-03	
												U-Nat [9.4988E-03 kg]	1.28725E+00	2.4953E-01	6.7441E-03	
												Subtotal		6.5909E-01	1.7813E-02	
												Total		6.5909E-01	1.7813E-02	
												Source [2.4538E-02 kg]				
9169/GTEOSI	19 Strong Tight Container Loaded in Gondola	4.9150	9956.3532	0.0001	<3.6740E-06	<3.6740E-05	22,59-CONCRETE,59 -MISC DEBRIS-HJ	4.9150	100	OXIDES/NONE	0.00	Ac-227	5.82000E-02	2.1381E-02	5.7787E-04	AU
												Pa-231	2.59400E-01	9.5297E-02	2.5756E-03	
												Ra-223	9.72100E-02	3.5712E-02	9.6520E-04	
		173.5700	10.9750	0.0120	<2.2000E+02	<2.2000E+03		173.5700				Ra-226	3.60822E-01	1.3256E-01	3.5826E-03	
												Ra-228	1.31957E+00	4.8477E-01	1.3102E-02	
												Th-227 [1.8641E-14 kg]	5.82000E-02	2.1381E-02	5.7787E-04	
												Th-228 [1.9946E-11 kg]	1.64725E+00	6.0517E-01	1.6356E-02	
												Th-230 [3.2637E-07 kg]	6.90282E-01	2.5359E-01	6.8538E-03	
												Th-232 [1.1911E-01 kg]	1.31957E+00	4.8477E-01	1.3102E-02	
												U-234 [2.9906E-05 kg]	1.86746E+01	6.8605E+00	1.8542E-01	
												U-Nat [4.1692E-01 kg]	2.98133E+01	1.0953E+01	2.9602E-01	
												Subtotal		1.9948E+01	5.3913E-01	
												Total		1.9948E+01	5.3913E-01	

FORM 541A

UNIFORM LOW-LEVEL RADIOACTIVE WASTE MANIFEST

CONTAINER AND WASTE DESCRIPTION (CONTINUATION)

Envirocare of Utah, Inc.

2. MANIFEST NUMBER 0840-01-982

DISPOSAL CONTAINER DESCRIPTION							WASTE DESCRIPTION FOR EACH WASTE TYPE IN CONTAINER									
							PHYSICAL DESCRIPTION			14. CHEMICAL DESCRIPTION		15. RADIOLOGICAL DESCRIPTION				16. WASTE CLASSIFICATION AS-Class A Stable AU-Class A Unstable B-Class B C-Class C
5. CONTAINER IDENTIFICATION NUMBER/ GENERATOR ID NUMBER(S)	6. CONTAINER DESCRIPTION (See Note 1 & Note 1A)	7. VOLUME (m3)/(ft3)	8. WASTE AND CONTAINER WEIGHT (kg)/(lon)	9. SURFACE RADIATION LEVEL (mSv/hr)/(mrem/hr)	10. SURFACE CONTAMINATION (MBq/100 cm2)/(dpm/100cm2) ALPHA	BETA-GAMMA	11. WASTE DESCRIPTOR (See Note 2 & Note 2A)	12. APPROXIMATE WASTE VOLUME(S) IN CONTAINER (m3)/(FT3)	13. SOLIDIFICATION OR STABILIZATION MEDIA (See Note 3)	CHEMICAL FORM/ CHELATING AGENT	WEIGHT % CHELATING AGENT IF > 0.1%	INDIVIDUAL RADIONUCLIDES AND ACTIVITY (MBq) AND CONTAINER TOTAL; OR CONTAINER TOTAL ACTIVITY AND RADIONUCLIDE PERCENT: RADIONUCLIDES	pCi/gm	MBq	mCi	
												Source [5.3606E-01 kg]				
9172/GTEOSI	19 Strong Tight Container Loaded in Gondola	4.7666	9656.9822	0.0001	<3.6740E-06	<3.6740E-05	22,59-CONCRETE,59 -MISC DEBRIS-HJ	4.7666	100	OXIDES/NONE	0.00	Ac-227	7.63000E-02	2.7185E-02	7.3472E-04	AU
												Pa-231	2.74300E-01	(9.7728E-02)	(2.6413E-03)	
												Ra-223	1.99300E-01	7.1007E-02	1.9191E-03	
		168.3300	10.6450	0.0100	<2.2000E+02	<2.2000E+03		168.3300				Ra-226	3.53490E-01	1.2594E-01	3.4039E-03	
												Ra-228	2.39007E+00	8.5156E-01	2.3015E-02	
												Th-227 [2.3701E-14 kg]	7.63000E-02	2.7185E-02	7.3472E-04	
												Th-228 [3.3933E-11 kg]	2.88960E+00	1.0295E+00	2.7825E-02	
												Th-230 [5.7330E-07 kg]	1.25027E+00	4.4544E-01	1.2039E-02	
												Th-232 [2.0923E-01 kg]	2.39007E+00	8.5156E-01	2.3015E-02	
												U-234 [8.2295E-05 kg]	5.29868E+01	1.8879E+01	5.1023E-01	
												U-Nat [1.1434E+00 kg]	8.43035E+01	3.0036E+01	8.1179E-01	
												Subtotal		5.2344E+01	1.4147E+00	
												Total		5.2344E+01	1.4147E+00	
												Source [1.3527E+00 kg]				
9173/GTEOSI	19 Strong Tight Container Loaded in Gondola	4.4497	9017.4169	0.0001	<3.6740E-06	<3.6740E-05	22,59-CONCRETE,59 -MISC DEBRIS-HJ	4.4497	100	OXIDES/NONE	0.00	Ac-227	7.05300E-02	2.3458E-02	6.3401E-04	AU
												Pa-231	1.54400E-01	(5.1352E-02)	(1.3879E-03)	
												Ra-223	7.31400E-02	2.4326E-02	6.5747E-04	
		157.1400	9.9400	0.0120	<2.2000E+02	<2.2000E+03		157.1400				Ra-226	3.30548E-01	1.0994E-01	2.9714E-03	
												Ra-228	9.93191E-01	3.3034E-01	8.9280E-03	
												Th-227 [2.0452E-14 kg]	7.05300E-02	2.3458E-02	6.3401E-04	
												Th-228 [1.1596E-11 kg]	1.05777E+00	3.5181E-01	9.5085E-03	
												Th-230 [2.2240E-07 kg]	5.19548E-01	1.7280E-01	4.6703E-03	
												Th-232 [8.1164E-02 kg]	9.93191E-01	3.3034E-01	8.9280E-03	
												U-234 [1.1277E-05 kg]	7.77797E+00	2.5870E+00	6.9918E-02	
												U-Nat [1.5849E-01 kg]	1.25183E+01	4.1636E+00	1.1253E-01	
												Subtotal		8.1171E+00	2.1938E-01	
												Total		8.1171E+00	2.1938E-01	
												Source [2.3967E-01 kg]				

FORM 541A

UNIFORM LOW-LEVEL RADIOACTIVE WASTE MANIFEST

CONTAINER AND WASTE DESCRIPTION (CONTINUATION)

Envirocare of Utah, Inc.

2. MANIFEST NUMBER 0840-01-982

DISPOSAL CONTAINER DESCRIPTION							WASTE DESCRIPTION FOR EACH WASTE TYPE IN CONTAINER										
							PHYSICAL DESCRIPTION			14. CHEMICAL DESCRIPTION		15. RADIOLOGICAL DESCRIPTION					16. WASTE CLASSIFICATION AS-Class A Stable AU-Class A Unstable B-Class B C-Class C
5. CONTAINER IDENTIFICATION NUMBER/ GENERATOR ID NUMBER(S)	6. CONTAINER DESCRIPTION (See Note 1 & Note 1A)	7. VOLUME (m3)/(ft3)	8. WASTE AND CONTAINER WEIGHT (kg)/(ton)	9. SURFACE RADIATION LEVEL (mSv/hr)/(mrem/hr)	10. SURFACE CONTAMINATION (MBq/100 cm2)/(dpm/100cm2) ALPHA	BETA-GAMMA	11. WASTE DESCRIPTOR (See Note 2 & Note 2A)	12. APPROXIMATE WASTE VOLUME(S) IN CONTAINER (m3)/(FT3)	13. SOLIDIFICATION OR STABILIZATION MEDIA (See Note 3)	CHEMICAL FORM/ CHELATING AGENT	WEIGHT % CHELATING AGENT IF > 0.1%	INDIVIDUAL RADIONUCLIDES AND ACTIVITY (MBq) AND CONTAINER TOTAL; OR CONTAINER TOTAL ACTIVITY AND RADIONUCLIDE PERCENT: RADIONUCLIDES		pCi/gm	MBq	mCi	
9174/GTEOSI	19 Strong Tight Container Loaded in Gondola	3.8069	7720.1426	0.0001	<3.6740E-06	<3.6740E-05	22,59-CONCRETE,59 -MISC DEBRIS-HJ	3.8069	100	OXIDES/NONE	0.00	Ac-227		5.75800E-02	1.6385E-02	4.4283E-04	AU
		134.4400	8.5100	0.0100	<2.2000E+02	<2.2000E+03		134.4400				Pa-231		1.80000E-01	(5.1219E-02)	(1.3843E-03)	
												Ra-223		3.59900E-02	(1.0241E-02)	(2.7679E-04)	
												Ra-226		2.95845E-01	8.4186E-02	2.2753E-03	
												Ra-228		1.31206E+00	3.7337E-01	1.0091E-02	
												Th-227	[1.4285E-14 kg]	5.75800E-02	1.6385E-02	4.4283E-04	
												Th-228	[1.5987E-11 kg]	1.70450E+00	4.8503E-01	1.3109E-02	
												Th-230	[2.5136E-07 kg]	6.86349E-01	1.9531E-01	5.2786E-03	
												Th-232	[9.1734E-02 kg]	1.31206E+00	3.7337E-01	1.0091E-02	
												U-234	[1.9772E-05 kg]	1.59395E+01	4.5358E+00	1.2259E-01	
												U-Nat	[2.7785E-01 kg]	2.56504E+01	7.2990E+00	1.9727E-01	
												Subtotal			1.3379E+01	3.6159E-01	
												Total			1.3379E+01	3.6159E-01	
												Source	[3.6960E-01 kg]				
9175/GTEOSI	19 Strong Tight Container Loaded in Gondola	4.2048	8523.0012	0.0001	<3.6740E-06	<3.6740E-05	22,59-CONCRETE,59 -MISC DEBRIS-HJ	4.2048	100	OXIDES/NONE	0.00	Ac-227		4.25200E-02	(1.3364E-02)	(3.6118E-04)	AU
		148.4900	9.3950	0.0120	<2.2000E+02	<2.2000E+03		148.4900				Pa-231		2.58600E-01	(8.1274E-02)	(2.1966E-03)	
												Ra-223		5.55200E-02	(1.7450E-02)	(4.7161E-04)	
												Ra-226		1.52460E-01	4.7919E-02	1.2951E-03	
												Ra-228		4.46241E-01	1.4025E-01	3.7905E-03	
												Th-227	[1.1651E-14 kg]	4.25200E-02	(1.3364E-02)	(3.6118E-04)	
												Th-228	[7.5881E-12 kg]	7.32513E-01	2.3022E-01	6.2222E-03	
												Th-230	[9.4422E-08 kg]	2.33433E-01	7.3367E-02	1.9829E-03	
												Th-232	[3.4459E-02 kg]	4.46241E-01	1.4025E-01	3.7905E-03	
												U-234	[4.9820E-06 kg]	3.63635E+00	1.1429E+00	3.0888E-02	
												U-Nat	[7.5629E-02 kg]	6.32145E+00	1.9868E+00	5.3697E-02	
												Subtotal			3.7617E+00	1.0167E-01	
												Total			3.7617E+00	1.0167E-01	
												Source	[1.1009E-01 kg]				
9180/GTEOSI	19 Strong Tight Container Loaded in Gondola	3.5104	7121.4007	0.0002	<3.6740E-06	<3.6740E-05	22,59-CONCRETE,59 -MISC DEBRIS-HJ	3.5104	100	OXIDES/NONE	0.00	Ac-227		4.24800E-02	(1.1146E-02)	(3.0125E-04)	AU
		123.9700	7.8500	0.0150	<2.2000E+02	<2.2000E+03		123.9700				Pa-231		4.65400E-01	1.2211E-01	3.3004E-03	
												Ra-223		1.20100E-01	(3.1513E-02)	(8.5169E-04)	
												Ra-226		1.50935E-01	3.9605E-02	1.0704E-03	
												Ra-228		5.71773E-02	(1.5002E-02)	(4.0547E-04)	

FORM 541A

UNIFORM LOW-LEVEL RADIOACTIVE WASTE MANIFEST

CONTAINER AND WASTE DESCRIPTION (CONTINUATION)

Envirocare of Utah, Inc.

2. MANIFEST NUMBER 0840-01-982

DISPOSAL CONTAINER DESCRIPTION							WASTE DESCRIPTION FOR EACH WASTE TYPE IN CONTAINER									
							PHYSICAL DESCRIPTION			14. CHEMICAL DESCRIPTION		15. RADIOLOGICAL DESCRIPTION				16. WASTE CLASSIFICATION AS-Class A Stable AU-Class A Unstable B-Class B C-Class C
5. CONTAINER IDENTIFICATION NUMBER/ GENERATOR ID NUMBER(S)	6. CONTAINER DESCRIPTION (See Note 1 & Note 1A)	7. VOLUME (m3)/(ft3)	8. WASTE AND CONTAINER WEIGHT (kg)/(ton)	9. SURFACE RADIATION LEVEL (mSv/hr)/(mrem/hr)	10. SURFACE CONTAMINATION (MBq/100 cm2)/(dpm/100cm2) ALPHA	BETA-GAMMA	11. WASTE DESCRIPTOR (See Note 2 & Note 2A)	12. APPROXIMATE WASTE VOLUME(S) IN CONTAINER (m3)/(FT3)	13. SOLIDIFICATION OR STABILIZATION MEDIA (See Note 3)	CHEMICAL FORM/ CHELATING AGENT	WEIGHT % CHELATING AGENT IF > 0.1%	INDIVIDUAL RADIONUCLIDES AND ACTIVITY (MBq) AND CONTAINER TOTAL; OR CONTAINER TOTAL ACTIVITY AND RADIONUCLIDE PERCENT: RADIONUCLIDES	pCi/gm	MBq	mCi	
												Th-227 [9.7176E-15 kg]	4.24800E-02	(1.1146E-02)	(3.0125E-04)	
												Th-228 [2.8676E-12 kg]	3.31582E-01	8.7002E-02	2.3514E-03	
												Th-230 [1.0100E-08 kg]	2.99100E-02	(7.8481E-03)	(2.1211E-04)	
												Th-232 [3.6861E-03 kg]	5.71773E-02	(1.5002E-02)	(4.0547E-04)	
												U-234 [7.3505E-07 kg]	6.42643E-01	1.6862E-01	4.5573E-03	
												U-Nat [1.1929E-02 kg]	1.19432E+00	3.1337E-01	8.4695E-03	
												Subtotal		7.3071E-01	1.9749E-02	
												Total		7.3071E-01	1.9749E-02	
												Source [1.5616E-02 kg]				
9213/GTEOSI	19 Strong Tight Container Loaded in Gondola	3.0293	6150.7129	0.0001	<3.6740E-06	<3.6740E-05	22,59-CONCRETE,59 -MISC DEBRIS-HJ	3.0293	100	OXIDES/NONE	0.00	Ac-227	1.07200E-01	2.4274E-02	6.5606E-04	AU
												Pa-231	1.70700E-01	(3.8654E-02)	(1.0447E-03)	
												Ra-223	4.66500E-02	(1.0563E-02)	(2.8549E-04)	
		106.9800	6.7800	0.0060	<2.2000E+02	<2.2000E+03		106.9800				Ra-226	1.61390E-01	3.6545E-02	9.8769E-04	
												Ra-228	5.63404E-01	1.2758E-01	3.4480E-03	
												Th-227 [2.1163E-14 kg]	1.07200E-01	2.4274E-02	6.5606E-04	
												Th-228 [5.2028E-12 kg]	6.97116E-01	1.5785E-01	4.2663E-03	
												Th-230 [8.5889E-08 kg]	2.94722E-01	6.6737E-02	1.8037E-03	
												Th-232 [3.1345E-02 kg]	5.63404E-01	1.2758E-01	3.4480E-03	
												U-234 [1.3446E-06 kg]	1.36219E+00	3.0845E-01	8.3365E-03	
												U-Nat [2.0352E-02 kg]	2.36108E+00	5.3465E-01	1.4450E-02	
												Subtotal		1.4079E+00	3.8052E-02	
												Total		1.4079E+00	3.8052E-02	
												Source [5.1698E-02 kg]				
9218/GTEOSI	19 Strong Tight Container Loaded in Gondola	4.7037	9529.9763	0.0001	<3.6740E-06	<3.6740E-05	22,59-CONCRETE,59 -MISC DEBRIS-HJ	4.7037	100	OXIDES/NONE	0.00	Ac-227	4.84800E-02	(1.7045E-02)	(4.6067E-04)	AU
												Pa-231	1.37900E-01	(4.8485E-02)	(1.3104E-03)	
												Ra-223	4.38500E-02	(1.5417E-02)	(4.1667E-04)	
		166.1100	10.5050	0.0060	<2.2000E+02	<2.2000E+03		166.1100				Ra-226	1.36633E-01	4.8037E-02	1.2983E-03	
												Ra-228	7.13901E-02	(2.5099E-02)	(6.7836E-04)	
												Th-227 [1.4860E-14 kg]	4.84800E-02	(1.7045E-02)	(4.6067E-04)	
												Th-228 [3.0199E-12 kg]	2.60606E-01	9.1623E-02	2.4763E-03	
												Th-230 [1.6898E-08 kg]	3.73448E-02	(1.3130E-02)	(3.5486E-04)	
												Th-232 [6.1670E-03 kg]	7.13901E-02	(2.5099E-02)	(6.7836E-04)	

FORM 541A

UNIFORM LOW-LEVEL RADIOACTIVE WASTE MANIFEST

CONTAINER AND WASTE DESCRIPTION (CONTINUATION)

Envirocare of Utah, Inc.

2. MANIFEST NUMBER 0840-01-982

DISPOSAL CONTAINER DESCRIPTION							WASTE DESCRIPTION FOR EACH WASTE TYPE IN CONTAINER									
5. CONTAINER IDENTIFICATION NUMBER/ GENERATOR ID NUMBER(S)	6. CONTAINER DESCRIPTION (See Note 1 & Note 1A)	7. VOLUME (m3)/(ft3)	8. WASTE AND CONTAINER WEIGHT (kg)/(ton)	9. SURFACE RADIATION LEVEL (mSv/hr)/(mrem/hr)	10. SURFACE CONTAMINATION (MBq/100 cm2)/(dpm/100cm2)		PHYSICAL DESCRIPTION			14. CHEMICAL DESCRIPTION		15. RADIOLOGICAL DESCRIPTION				16. WASTE CLASSIFICATION AS-Class A Stable AU-Class A Unstable B-Class B C-Class C
					ALPHA	BETA-GAMMA	11. WASTE DESCRIPTOR (See Note 2 & Note 2A)	12. APPROXIMATE WASTE VOLUME(S) IN CONTAINER (m3)/(FT3)	13. SOLIDIFICATION OR STABILIZATION MEDIA (See Note 3)	CHEMICAL FORM/ CHELATING AGENT	WEIGHT % CHELATING AGENT IF > 0.1%	INDIVIDUAL RADIONUCLIDES AND ACTIVITY (MBq) AND CONTAINER TOTAL; OR CONTAINER TOTAL ACTIVITY AND RADIONUCLIDE PERCENT				
												RADIONUCLIDES	pCi/gm	MBq	mCi	
												U-234 [1.5937E-06 kg]	1.03984E+00	(3.6559E-01)	(9.8808E-03)	
												U-Nat [2.3055E-02 kg]	1.72268E+00	6.0565E-01	1.6369E-02	
												Subtotal		7.4531E-01	2.0144E-02	
												Total		7.4531E-01	2.0144E-02	
												Source [2.9224E-02 kg]				
Shipment Totals		42.6995	86581.7172									Source [3.0835E+00 kg]		1.1391E+02	3.0785E+00	
		1507.9200	95.4400													

FORM 541A (04-03)

Envirocare of Utah, Inc.

ADDITIONAL NOTES

Manifest Number
0840-01-982
PAGE 1

New York State Waste Transporter Part 364 permit No. 4A-288
New York State Waste Transporter Part 381 permit Number 4A-288

UNIFORM LOW-LEVEL RADIOACTIVE WASTE MANIFEST
ISOTOPES REPORT

For Manifest # 0840-01-982
Envirocare of Utah, Inc.

	Total Activity		
Isotope	(MBq)	(mCi)	(Ci)
Ac-227	1.8143E-01	4.9036E-03	4.9036E-06
Pa-231	6.9650E-01	1.8824E-02	1.8824E-05
Ra-223	2.6297E-01	7.1073E-03	7.1073E-06
Ra-226	7.1910E-01	1.9435E-02	1.9435E-05
Ra-228	2.7634E+00	7.4686E-02	7.4686E-05
Th-227	1.8143E-01	4.9036E-03	4.9036E-06
Th-228	3.5698E+00	9.6480E-02	9.6480E-05
Th-230	1.4456E+00	3.9069E-02	3.9069E-05
Th-232	2.7634E+00	7.4686E-02	7.4686E-05
U-234	3.9317E+01	1.0626E+00	1.0626E-03
U-Nat	6.3163E+01	1.7071E+00	1.7071E-03

ENVIROCARE *OF UTAH, LLC.*

THE SAFE ALTERNATIVE

CERTIFICATE OF DISPOSAL

GTE Operations Support Inc., Irving

This Certificate acknowledges that the following manifested shipments:

Shipment	Disposal Location	Date	Shipment	Disposal Location	Date
0840-01-0977	Class A	06/10/05 11:58:51	0840-01-0981	Class A	06/10/05 11:34:19
0840-01-0982	Class A	06/10/05 11:58:51	0840-01-0983	Class A	06/10/05 11:34:19
0840-01-0984	Class A	06/10/05 10:04:57	0840-01-0985	Class A	06/10/05 10:04:57
0840-01-0986	Class A	06/10/05 11:34:19	0840-04-0029	Class A	06/10/05 11:58:51

Representing 9,190.86 cubic feet of waste has been disposed of at the above listed Disposal Facility. Disposal is subject to Envirocare's Radioactive Material License, all other applicable licenses, permits and regulations, and the Disposal Agreement.

Brent Anderson
Director of LLRW Operations

6/14/05
Date

605 N. 5600 W, Salt Lake City, Utah 84116 Telephone (801) 532-1330

Attachment 5.10
TRANSPORT VEHICLE RELEASE CHECKLIST

Shipment Number- 0840-91-982

Truck Number- 38 - 44

Trailer Number- 225 - 226

A qualified MHF-LS shipping technician shall verify that each item listed is satisfactory and then place a Check Mark in the corresponding box.

1. Driver possesses a valid driver's license with a HAZMAT endorsement ☑
2. Driver possesses a valid copy of a "Research and Special Programs Administration" U.S. DOT Hazmat Registration Certificate ☑
3. If manifested on a Hazardous Waste Manifest, ensure the carrier possesses a current EPA ID # ☐
4. Lamps are operable ☑
   - Headlights and Brights
   - Warning Lights and Flashers
   - Brake Lights
5. Coupling devices are intact ☑
6. Tires are sufficient ☑
   - No fabric is exposed through tread or sidewall
   - Front wheel tires must have tread pattern to a depth of ≥1/8 inch
   - Other tires must have tread pattern to a depth of ≥1/16 inch
   - Re-treaded tires are not authorized
7. Horn is operable ☑
8. Windshield wipers are operable ☑
9. Rear-vision mirrors are adequate (1 on each side) ☑
10. Emergency equipment is on-hand and accessible ☑
    - Fire extinguisher
    - Warning devices- bi-directional emergency reflectors, triangles (3), or liquid burning flares
11. General vehicle integrity is satisfactory ☑
    - Frame appears undamaged
    - Flooring is sufficient to support load
    - If a closed transport vehicle, vehicle is closed
    - Vehicle is otherwise in unimpaired physical condition
12. Vehicle truck and trailer have current DOT inspection stickers on both components (Good for 1 year from date performed) ☑
13. Vehicle is properly placarded (Exclusive Use LSA, Yellow III and HRCQ only) ☑
14. Shoring, strapping, blocking and bracing is adequate to prevent shifting of lading ☑

MHF-LS Qualified Technician Signature _____
Shipment Date 5-19-05

Attachment 5.9
LOADING DIAGRAM

A qualified MHF-LS shipper shall complete the following diagram by writing the package number and corresponding weight at the approximate position in which it is placed. The space to the left of the diagram may be used for additional or explanatory information as necessary.

Shipment Number- 0840.01-982

Front

9169
21950-lbs

9172
21290-lbs

Rear

MHF-LS Qualified Technician
Signature _____
Shipment Date 5-19-03

Attachment 5.9
LOADING DIAGRAM

A qualified MHF-LS shipper shall complete the following diagram by writing the package number and corresponding weight at the approximate position in which it is placed. The space to the left of the diagram may be used for additional or explanatory information as necessary.

Shipment Number- 0840.01-982

Front

9173
19880-lbs

9174
17020-lbs

Rear

MHF-LS Qualified Technician
Signature _____
Shipment Date 5.19.05

Attachment 5.9
LOADING DIAGRAM

A qualified MHF-LS shipper shall complete the following diagram by writing the package number and corresponding weight at the approximate position in which it is placed. The space to the left of the diagram may be used for additional or explanatory information as necessary.

Shipment Number- 0840.01-982

Front

9129
13430-lbs

9164
16630-lbs

Rear

MHF-LS Qualified Technician
Signature _____
Shipment Date 5-19-03

Attachment 5.9
LOADING DIAGRAM

A qualified MHF-LS shipper shall complete the following diagram by writing the package number and corresponding weight at the approximate position in which it is placed. The space to the left of the diagram may be used for additional or explanatory information as necessary.

Shipment Number- 0840-01-982

Front

9175
18790-lbs

9180
15700-lbs

Rear

MHF-LS Qualified Technician
Signature _____
Shipment Date 5-19-05

Attachment 5.9
LOADING DIAGRAM

A qualified MHF-LS shipper shall complete the following diagram by writing the package number and corresponding weight at the approximate position in which it is placed. The space to the left of the diagram may be used for additional or explanatory information as necessary.

Shipment Number- 0840.01-982

Front

9218
21010-lbs

9166
11620-lbs

Rear

MHF-LS Qualified Technician
Signature _____
Shipment Date 5-19-05

Attachment 5.9
LOADING DIAGRAM

A qualified MHF-LS shipper shall complete the following diagram by writing the package number and corresponding weight at the approximate position in which it is placed. The space to the left of the diagram may be used for additional or explanatory information as necessary.

Shipment Number- 0840.01-982

Front

9213
13560.105

Rear

MHF-LS Qualified Technician
Signature [signature]
Shipment Date 5.19.05

BagNum	MANIFEST GROSS WEIGHT
9180	15700

Shipment Survey

Survey Number: GTE051-05 00301 Date: 1·12·05 Time: 0850

Waste Container Type: Super Sack Intermodal Other: Soil

Waste Container ID #: 9180 Storage Bin: 49 Gross Weight: 15700 lbs

	Ludlum 3030		Ludlum 3030		Ludlum 3030		L-19
Serial #	190641		191265				176124
Probe #	NA		NA				NA
Calibration Due Date:	3·4·05		4·20·05		N/A		3·6·05
	α	β	α	β	α	β	
Background	0 cpm	25 cpm	0 cpm	25 cpm	cpm	cpm	6 μR/hr
Efficiency	29 %	25 %	29 %	25 %	%	%	
MDA	25 dpm	130 dpm	25 dpm	130 dpm	dpm	dpm	

Maximum Contact Dose Rate: .015 mrem/hr Transport Index: 0 mrem/hr

	α cpm	α dpm/100 cm2	β cpm	β dpm/100 cm2
ALARA Limit	N/A	60	N/A	500
Smear #				
1	0	<MDA	28	<MDA
2	0		22	
3	0		26	
4	0		30	
5	0		24	
6	0		29	

Smear Locations: 1 - Bottom 2 - Front 3 - Right Side 4 - Back 5 - Left Side 6 - Top

Thompson
Surveyor Name

Surveyor Signature

Supervisor Approval

24706-S-U02XX9180-99.9
Date: 01/20/05 Time:1702

1-12-05 8:50 Bag# 9180
15700 lb GR
011205 0850 9180 0015700

BagNum	MANIFEST GROSS WEIGHT
9218	21010

Shipment Survey

Survey Number: GTEOSI-05-00321 Date: 3-17-05 Time: 1205

Waste Container Type: Super Sack Intermodal Other: WASTE

Waste Container ID #: 9218 Storage Bin: 37 Gross Weight: 21010 lbs

	Ludlum 3030		Ludlum 3030		Ludlum 3030		L-19
Serial #	190646		196165		N		196117
Probe #	N/A		N/A				N/A
Calibration Due Date:	12-13-05		7-18-05				8-10-05
	α	β	α	β	α	β	
Background	0 cpm	25 cpm	0 cpm	25 cpm	cpm	cpm	5 μR/hr
Efficiency	29 %	25 %	29 %	25 %	%	%	
MDA	25 dpm	130 dpm	25 dpm	130 dpm	dpm	A dpm	

Maximum Contact Dose Rate: .006 mrem/hr Transport Index: 0 mrem/hr

	α cpm	α dpm/100 cm2	β cpm	β dpm/100 cm2
ALARA Limit	N/A	60	N/A	600
Smear #				
1	1	<MDA	33	<MDA
2	1		23	
3	0		29	
4	0		28	
5	0		42	
6	0		30	

Smear Locations: 1 - Bottom 2 - Front 3 - Right Side 4 - Back 5 - Left Side 6 - Top

JOHN MITCHELL SR
Surveyor Name

John Mitchell Sr
Surveyor Signature

George Thomas
Supervisor Approval

26248-S-GCXXX9218-99.9
Date: 02/14/05 Time:1254

3-17-05 12:03 Bag# 9218
21010 lb GR
031705 1205 9218 0021010

BagNum	MANIFEST GROSS WEIGHT
9213	13560

Shipm Survey

Survey Number: GTEOSI-05-00310 Date: 1-26-05 Time: 1425

Waste Container Type: Super Sack Intermodal Other: WASTE

Waste Container ID #: 9213 Storage Bin: 36 Gross Weight: 13560 lbs

	Ludlum 3030		Ludlum 3030		Ludlum 3030		L-19
Serial #	190646		191265				193615
Probe #	N/A		N/A		N/A		N/A
Calibration Due Date:	12-13-05		4-20-05				5-19-05
	α	β	α	β	α	β	
Background	0 cpm	25 cpm	0 cpm	25 cpm	cpm	cpm	5 μR/hr
Efficiency	29 %	25 %	29 %	25 %	%	N/A %	
MDA	25 dpm	130 dpm	25 dpm	130 dpm	dpm	dpm	

Maximum Contact Dose Rate: .006 mrem/hr Transport Index: 0 mrem/hr

	α cpm	α dpm/100 cm2	β cpm	β dpm/100 cm2
ALARA Limit	N/A	60	N/A	500
Smear #				
1	1	<MDA	34	<MDA
2	0		30	
3	2		27	
4	0		37	
5	1		31	
6	0		28	

Smear Locations: 1 - Bottom 2 - Front 3 - Right Side 4 - Back 5 - Left Side 6 - Top

JOHN MITCHELL SR
Surveyor Name

John Mitchell Sr
Surveyor Signature

Supervisor Approval

24910-S-SHEET9213-99.9
Date: 01/26/05 Time:1635

1-26-05 14:25 Bag# 9213
13560 lb GR
012605 1425 9213 0013560

BagNum	MANIFEST GROSS WEIGHT
9169	21950

Shipment Survey

Survey Number: GTEOSI-04-7598 Date: 12-2-04 Time: 1553

Waste Container Type: Super Sack Intermodal Other: Soil

Waste Container ID #: 9169 Storage Bin: 43 Gross Weight: 21950 lbs

	Ludlum 3030		Ludlum 3030		Ludlum 3030		Ludlum 19
Serial #	190641		191265				193615
Probe #	N/A		N/A		N/A		N/A
Calibration Due Date:	3-4-05		4-20-05				5-19-05
	α	β	α	β	α	β	
Background	0 cpm	25 cpm	0 cpm	25 cpm	cpm	cpm	6 μR/hr
Efficiency	29 %	25 %	29 %	25 %	N/A %	N/A %	
MDA	25 dpm	130 dpm	25 dpm	130 dpm	dpm	dpm	

Maximum Contact Dose Rate: .012 mrem/hr Transport Index: 0 mrem/hr

	α cpm	α dpm/100 cm2	β cpm	β dpm/100 cm2
ALARA Limit	N/A	60	N/A	500
Smear #				
1	0	<MDA	27	<MDA
2	0		30	
3	2		29	
4	0		31	
5	0		35	
6	2		28	

Smear Locations: 1 - Bottom 2 - Front 3 - Right Side 4 - Back 5 - Left Side 6 - Top

Debra LePage — Surveyor Name

Debra LePage — Surveyor Signature

George Lomond — Supervisor Approval

22304-S-XX0039169-03.0
Date: 12/02/04 Time:1339

12-02-04 15:53 Bag# 9169
21950 lb GR
120204 1553 9169 0021950

BagNum	MANIFEST GROSS WEIGHT
9172	21290

Shipment Survey

Survey Number: GTEOSI-04-7599 Date: 12-3-04 Time: 1423

Waste Container Type: Super Sack Intermodal Other: Soil

Waste Container ID #: 9172 Storage Bin: 43 Gross Weight: 21290 lbs

	Ludlum 3030		Ludlum 3030		Ludlum 3030		Ludlum 19
Serial #	190641		191265				193615
Probe #	N/A		N/A		N/A		N/A
Calibration Due Date:	3-4-05		4-20-05				5-19-05
	α	β	α	β	α	β	
Background	0 cpm	25 cpm	0 cpm	25 cpm	cpm	cpm	5 μR/hr
Efficiency	29 %	25 %	29 %	25 %	N/A %	N/A %	
MDA	25 dpm	130 dpm	25 dpm	130 dpm	dpm	dpm	

Maximum Contact Dose Rate: .010 mrem/hr Transport Index: 0 mrem/hr

	α cpm	α dpm/100 cm2	β cpm	β dpm/100 cm2
ALARA Limit	N/A	60	N/A	500
Smear #				
1	0	<MDA	29	<MDA
2	0		33	
3	0		42	
4	0		22	
5	0		35	
6	0		19	

Smear Locations: 1 - Bottom 2 - Front 3 - Right Side 4 - Back 5 - Left Side 6 - Top

Debra LePage — Surveyor Name

Debra LePage — Surveyor Signature

George Economos — Supervisor Approval

22436-S-XX0039172-03.0

Date: 12/03/04 Time:1144

12-03-04 14:23 Bag# 9172

21290 lb GR

120304 1423 9172 0021290

BagNum	MANIFEST GROSS WEIGHT
9173	19880

Shipment Survey

Survey Number: GTEOSI-04-10501 Date: 12-8-04 Time: 1048

Waste Container Type: Super Sack Intermodal Other: Soil

Waste Container ID #: 9173 Storage Bin: 43 Gross Weight: 19880 lbs

	Ludlum 3030		Ludlum 3030		Ludlum 3030		Ludlum 19
Serial #	190641		191265				193615
Probe #	N/A		N/A		N/A		N/A
Calibration Due Date:	3-4-05		4-20-05				5-19-05
	α	β	α	β	α	β	
Background	0 cpm	25 cpm	0 cpm	25 cpm	cpm	cpm	6 μR/hr
Efficiency	29 %	25 %	29 %	25 %	N/A %	N/A %	
MDA	25 dpm	130 dpm	25 dpm	130 dpm	dpm	dpm	

Maximum Contact Dose Rate: .012 mrem/hr Transport Index: 0 mrem/hr

	α cpm	α dpm/100 cm2	β cpm	β dpm/100 cm2
ALARA Limit	N/A	60	N/A	600
Smear #				
1	0	<MDA	33	<MDA
2	0		26	
3	0		31	
4	0		34	
5	1		19	
6	0		41	

Smear Locations: 1 - Bottom 2 - Front 3 - Right Side 4 - Back 5 - Left Side 6 - Top

DEBRA LePage — Debra LePage
Surveyor Name — Surveyor Signature

George Economos
Supervisor Approval

22486-S-XX0039173-03.0
Date: 12/06/04 Time:0929

12-08-04 10:48 Bag# 9173
19880 lb GR
120804 1048 9173 0019880

BagNum	MANIFEST GROSS WEIGHT
9174	17020

Shipment Survey

Survey Number: GTEOSI-04-10500 Date: 12-8-04 Time: 1041

Waste Container Type: Super Sack Intermodal Other: SOIL

Waste Container ID #: 9174 Storage Bin: 43 Gross Weight: 17020 lbs

	Ludlum 3030		Ludlum 3030		Ludlum 3030		Ludlum 19
Serial #	190641		191265				193615
Probe #	N/A		N/A		N/A		N/A
Calibration Due Date:	3-4-05		4-20-05				5-19-05
	α	β	α	β	α	β	
Background	0 cpm	25 cpm	0 cpm	25 cpm	cpm	cpm	6 μR/hr
Efficiency	29 %	25 %	29 %	25 %	N/A %	N/A %	
MDA	25 dpm	130 dpm	25 dpm	130 dpm	dpm	dpm	

Maximum Contact Dose Rate: .010 mrem/hr Transport Index: 0 mrem/hr

	α cpm	α dpm/100 cm2	β cpm	β dpm/100 cm2
ALARA Limit	N/A	60	N/A	500
Smear #				
1	0	<MDA	27	<MDA
2	0		37	
3	0		38	
4	0		20	
5	0		31	
6	0		26	

Smear Locations: 1 - Bottom 2 - Front 3 - Right Side 4 - Back 5 - Left Side 6 - Top

DEBRA LePage — Debra LePage
Surveyor Name — Surveyor Signature

George Economos
Supervisor Approval

22595-S-XXP039174-04.0
Date: 12/07/04 Time:1529

12-08-04 10:41 Bag# 9174
17020 lb GR
120804 1041 9174 0017020

Shipment Survey

Survey Number: GTEOSI-04-7589 Date: 11-11-04 Time: 1532

Waste Container Type: Super Sack Intermodal Other: Soil

Waste Container ID #: 9129 Storage Bin: 41 Gross Weight: 13430 lbs

	Ludlum 3030		Ludlum 3030		Ludlum 3030		L-19
Serial #	190641		191265				196117
Probe #	N/A		N/A		N/A		N/A
Calibration Due Date:	3-4-05		4-20-05				8-10-05
	α	β	α	β	α	β	
Background	0 cpm	25 cpm	0 cpm	25 cpm	cpm	cpm	6 μR/hr
Efficiency	29 %	25 %	29 %	25 %	N/A %	N/A %	
MDA	25 dpm	130 dpm	25 dpm	130 dpm	dpm	dpm	

Maximum Contact Dose Rate: 0.010 mrem/hr Transport Index: 0 mrem/hr

	α cpm	α dpm/100 cm2	β cpm	β dpm/100 cm2
ALARA Limit	N/A	60	N/A	500
Smear #				
1	1	<MDA	24	<MDA
2	0		24	
3	1		29	
4	0		28	
5	0		33	
6	0		24	

Smear Locations: 1 - Bottom 2 - Front 3 - Right Side 4 - Back 5 - Left Side 6 - Top

S. Eckert
Surveyor Name

Surveyor Signature

George Economos
Supervisor Approval

20376-S-SHEET9129-99.9
Date: 11/03/04 Time:1244

11-11-04 15:32 Bag# 9129
13430 lb GR
111104 1532 9129 0013430

BagNum	MANIFEST GROSS WEIGHT
9164	16630

Shipment Survey

Survey Number: GTEOSI-04-7597 Date: 12-2-04 Time: 0907

Waste Container Type: Super Sack Intermodal Other: Soil

Waste Container ID #: 9164 Storage Bin: 42 Gross Weight: 16630 lbs

	Ludlum 3030		Ludlum 3030		Ludlum 3030		Ludlum 19
Serial #	190641		191265				193615
Probe #	N/A		N/A		N/A		N/A
Calibration Due Date:	3-4-05		4-20-05				5-19-05
	α	β	α	β	α	β	
Background	0 cpm	25 cpm	0 cpm	25 cpm	cpm	cpm	6 μR/hr
Efficiency	29 %	25 %	29 %	25 %	N/A %	N/A %	
MDA	25 dpm	130 dpm	25 dpm	130 dpm	dpm	dpm	

Maximum Contact Dose Rate: .010 mrem/hr Transport Index: 0 mrem/hr

	α cpm	α dpm/100 cm2	β cpm	β dpm/100 cm2
ALARA Limit	N/A	60	N/A	500
Smear #				
1	0	<MDA	24	<MDA
2	0		32	
3	0		34	
4	1		35	
5	1		29	
6	0		34	

Smear Locations: 1 - Bottom 2 - Front 3 - Right Side 4 - Back 5 - Left Side 6 - Top

DEBRA LePage — Debra LePage

Surveyor Name — Surveyor Signature

George Economus

Supervisor Approval

22461-S-09F219164-99.9

Date: 12/03/04 Time:1500

12-02-04 9:07 Bag# 9164

16630 lb GR

120204 0907 9164 0016630

BagNum	MANIFEST GROSS WEIGHT
9175	18790

Shipment Survey

Survey Number: GTEOSI-04-7600 Date: 12-8-04 Time: 1034

Waste Container Type: Super Sack Intermodal Other: soil

Waste Container ID #: 9175 Storage Bin: ~~Amt~~ 43 12/8/04 Gross Weight: 18790 lbs

	Ludlum 3030		Ludlum 3030		Ludlum 3030		Lud 19
Serial #	190641		191265				193615
Probe #	N/A		N/A		N/A		N/A
Calibration Due Date:	3-4-05		4-20-05				5-19-05
	α	β	α	β	α	β	
Background	0 cpm	25 cpm	0 cpm	25 cpm	cpm	cpm	6 μR/hr
Efficiency	29 %	25 %	29 %	25 %	N/A %	N/A %	
MDA	25 dpm	130 dpm	25 dpm	130 dpm	dpm	dpm	

Maximum Contact Dose Rate: .012 mrem/hr Transport Index: 0 mrem/hr

	α cpm	α dpm/100 cm2	β cpm	β dpm/100 cm2
ALARA Limit	N/A	60	N/A	500
Smear #				
1	0	<MDA	27	<MDA
2	0		26	
3	0		28	
4	0		31	
5	0		26	
6	1		31	

Smear Locations: 1 - Bottom 2 - Front 3 - Right Side 4 - Back 5 - Left Side 6 - Top

DEBRA LePage Debra LePage
Surveyor Name Surveyor Signature

George Economus
Supervisor Approval

22598-S-XXP039175-04.0
Date: 12/08/04 Time:0810

12-08-04 10:34 Bag# 9175
18790 lb GR
120804 1034 9175 0018790

BagNum	MANIFEST GROSS WEIGHT
9166	11620

Shipment Survey

Survey Number: GTEOSI-04 10502 Date: 12-13-04 Time: 1113

Waste Container Type: Super Sack Intermodal Other: Soil

Waste Container ID #: 9166 Storage Bin: 34 Gross Weight: 11620 lbs

	Ludlum 3030		Ludlum 3030		Ludlum 3030		Ludlum 19
Serial #	190641		191265		N		193615
Probe #	N/A		N/A				N/A
Calibration Due Date:	3-4-05		4-20-05			A	5-19-05
	α	β	α	β	α	β	
Background	0 cpm	25 cpm	0 cpm	25 cpm	N cpm	cpm	6 μR/hr
Efficiency	29 %	25 %	29 %	25 %	%	%	
MDA	25 dpm	130 dpm	25 dpm	130 dpm	dpm	A dpm	

Maximum Contact Dose Rate: .007 mrem/hr Transport Index: 0 mrem/hr

	α cpm	α dpm/100 cm2	β cpm	β dpm/100 cm2
ALARA Limit	N/A	60	N/A	500
Smear #				
1	0	<MDA	25	<MDA
2	0		39	
3	0		29	
4	0		30	
5	0		32	
6	0		25	

Smear Locations: 1 - Bottom 2 - Front 3 - Right Side 4 - Back 5 - Left Side 6 - Top

DEBRA LePage
Surveyor Name

Debra LePage
Surveyor Signature

George Economou
Supervisor Approval

22587-S-LPHG-9166-99.9
Date: 12/07/04 Time:1248

12-13-04 11:13 Bag# 9166
11620 lb GR
121304 1113 9166 0011620

NYSDEC:V00089-1; URS27010-039

Attachment 5.15
RAILCAR INSPECTION FORM

Shipment Number	Carrier	Railcar Number
0840.01-982	NYARR / MHF	NHRX-1032

Item	SAT	UNSAT	Criteria	Comments
Coupler	☑	☐	Hardware intact, no cracks or broken welds, latching mechanism works properly, no loose or damaged parts	
Suspension	☑	☐	Hardware intact, no visible cracks or broken welds, coil springs seated and intact, inner and outer bearings intact and seated properly	
Wheel & Axle Assembly	☑	☐	Overall condition, no cracks or damaged areas on wheel surfaces, hubs centered, bolting intact, rims not bent or cracked	
Frame & Undercarriage	☑	☐	Main beams straight and centered, no major bends or damage, welds intact, no cracks	
Floors & Walls (Gondola, Boxcar)	☑	☐	No damage with open holes, punch throughs, ect. No rust damage, seams and welds intact, no rotting or other material problems, structurally sound	
Attachment Points or Tie Downs	☑	☐	Tie down hardware straight and intact, no cracks on or around attachment hardware, mechanical clips or latches operable and complete	
Doors (Boxcar Only)	☑	☐	Can be closed and secured properly, lubricated properly, rollers and tracks in operable condition, no loose or missing hardware, sealing surfaces intact and seals in serviceable condition	
Seals and Gasket	☑	☐	Seal Flanges intact with no dents or bends that affect sealing capability, gaskets pliable and in serviceable condition, no torn or missing areas, gasket appropriate to meet sealing requirements	
Seams (Gondola, Boxcar)	☑	☐	Seams intact, welds visibly sufficient, all corners and mating interfaces caulked and sealed properly	
Drains	☑	☐	Drains plugged or sealed properly, verify threaded plugs are tack welded or otherwise disabled, all other holes closed and sealed	
Brakes	☑	☐	Visibly inspect brake shoes, minimum 1" contact surface on all shoes, hoses and piping (tubing) mechanically sound, no missing or loose hardware, valves operate freely, no kinks or obstructions in piping or hoses	
Paint and Lettering	☑	☐	Overall good condition of exterior surfaces, identification numbering legible and intact, areas for placards or labels intact and structurally sound (Wood or metal panels)	
Bracing	☑	☐	Bracing and shoring must be sufficient to prevent shifting of lading during conditions normally incident to transportation	

MHF-LS Qualified Technician Signature _____

Shipment Date 5-8-05

Straight Bill of Lading

Shipper	MHF-LS For GTE Operations Support Incorporated 140 Contiague Rock Road Hicksville, NY 11369	Date: 5/19/2005
Consigned to	MHF-LS @ New York-Atlantic Rail Spur Hicksville, NY 11369	Load in Gondola # NHRX
Emergency Contact:	CHEMTREC 800-424-9300	1032

TR: TL:

Quantity	Description		Net Waste Weight
2	Soil, DOT Non-Regulated Waste, Containing		
	Radioactive Materials.		
	Package ID Number		**Pounds:**
	Liner	9218	21010
	Liner	9166	11620
			Total:
			32630
	Packages do not meet the DOT "radioactive material"		
	definition in 49 CFR 173.403.		
	Radionuclide: Ac-227,Th-227, Th232, Th230,Pa-231,Ra-223		
	Ra-226,Ra-228,Th-228,U-234,U-nat,		
	Total Activity: 1.97188 MBq		
	Physical Form: Solid		
	Chemical Form: Metal Oxide		

GENERATOR CERTIFICATION: I hereby certify and declare that the contents of this consignment are fully and accurately described above by proper shipping name and are classified, packed, marked, and labeled, and are in all respects in proper condition for transport by highway according to applicable international and national government regulations.

Printed/Typed Name	Signature		Date
Robert Miller for MHFLS at GTEOSI			5/19/2005
Transporter	Signature		Date
Priority Transport			5/19/2005

Straight Bill of Lading

Shipper	MHF-LS For GTE Operations Support Incorporated 140 Contiague Rock Road Hicksville, NY 11369	Date: 5/19/2005
Consigned to	MHF-LS @ New York-Atlantic Rail Spur Hicksville, NY 11369	Load in Gondola # NHRX
Emergency Contact:	CHEMTREC 800-424-9300	1032

TR: TL:

Quantity	Description		Net Waste Weight
2	Soil, DOT Non-Regulated Waste, Containing		
	Radioactive Materials.		
	Package ID Number		**Pounds:**
	Liner	9173	19880
	Liner	9174	17020
			Total:
			36900
	Packages do not meet the DOT "radioactive material"		
	definition in 49 CFR 173.403.		
	Radionuclide: Ac-227,Th-227, Th232, Th230,Pa-231,Ra-223		
	Ra-226,Ra-228,Th-228,U-234,U-nat,		
	Total Activity: 21.6084 MBq		
	Physical Form: Solid		
	Chemical Form: Metal Oxide		

GENERATOR CERTIFICATION: I hereby certify and declare that the contents of this consignment are fully and accurately described above by proper shipping name and are classified, packed, marked, and labeled, and are in all respects in proper condition for transport by highway according to applicable international and national government regulations.

Printed/Typed Name	Signature		Date
Robert Miller for MHFLS at GTEOSI			5/19/2005
Transporter	Signature		Date
Priority Transport			5/19/2005

Straight Bill of Lading

Shipper MHF-LS For GTE Operations Support Incorporated
140 Contiague Rock Road
Hicksville, NY 11369

Date: 5/19/2005

Consigned to MHF-LS @ New York-Atlantic Rail Spur
Hicksville, NY 11369

Load in Gondola # NHRX 1032

Emergency Contact: CHEMTREC 800-424-9300

TR: TL:

Quantity	Description		Net Waste Weight
2	Soil, DOT Non-Regulated Waste, Containing		
	Radioactive Materials.		
	Package ID Number		**Pounds:**
	Liner	9175	18790
	Liner	9180	15700
			Total:
			34490
	Packages do not meet the DOT "radioactive material"		
	definition in 49 CFR 173.403.		
	Radionuclide: Ac-227,Th-227, Th232, Th230,Pa-231,Ra-223		
	Ra-226,Ra-228,Th-228,U-234,U-nat,		
	Total Activity: 4.70947 MBq		
	Physical Form: Solid		
	Chemical Form: Metal Oxide		

4.70947

GENERATOR CERTIFICATION I hereby certify and declare that the contents of this consignment are fully and accurately described above by proper shipping name and are classified, packed, marked, and labeled, and are in all respects in proper condition for transport by highway according to applicable international and national government regulations

Printed/Typed Name	Signature		Date
Robert Miller for MHFLS at GTEOSI			5/19/2005
Transporter	Signature		Date
Priority Transport			5/19/2005

Straight Bill of Lading

Shipper MHF-LS For GTE Operations Support Incorporated
140 Contiague Rock Road
Hicksville, NY 11369

Date: 5/19/2005

Consigned to MHF-LS @ New York-Atlantic Rail Spur
Hicksville, NY 11369

Load in Gondola # NHRX 1032

Emergency Contact: CHEMTREC 800-424-9300

TR: TL:

Quantity	Description		Net Waste Weight
1	Soil, DOT Non-Regulated Waste, Containing		
	Radioactive Materials.		
	Package ID Number		**Pounds:**
	Liner	9213	13560
	Liner		
			Total:
			13560
	Packages do not meet the DOT "radioactive material"		
	definition in 49 CFR 173.403.		
	Radionuclide: Ac-227,Th-227, Th232, Th230,Pa-231,Ra-223		
	Ra-226,Ra-228,Th-228,U-234,U-nat,		
	Total Activity: 1.4571 MBq		
	Physical Form: Solid		
	Chemical Form: Metal Oxide		

GENERATOR CERTIFICATION: I hereby certify and declare that the contents of this consignment are fully and accurately described above by proper shipping name and are classified, packed, marked, and labeled, and are in all respects in proper condition for transport by highway according to applicable international and national government regulations.

Printed/Typed Name	Signature		Date
Robert Miller for MHFLS at GTEOSI			5/19/2005
Transporter	Signature		Date
Priority Transport			5/19/2005

Straight Bill of Lading

Shipper MHF-LS For GTE Operations Support Incorporated
140 Contiague Rock Road
Hicksville, NY 11369

Date: 5/19/2005

Consigned to MHF-LS @ New York-Atlantic Rail Spur
Hicksville, NY 11369

Load in Gondola # NHRX 1032

Emergency Contact: CHEMTREC 800-424-9300

TR:

Quantity	Description		Net Waste Weight
2	Soil, DOT Non-Regulated Waste, Containing		
	Radioactive Materials.		
	Package ID Number		**Pounds:**
	Liner	9129	13430
	Liner	9164	16630
			Total:
			30060
	Packages do not meet the DOT "radioactive material"		
	definition in 49 CFR 173.403.		
	Radionuclide: Ac-227,Th-227, Th232, Th230,Pa-231,Ra-223		
	Ra-226,Ra-228,Th-228,U-234,U-nat,		
	Total Activity: 12.9265 MBq		
	Physical Form: Solid		
	Chemical Form: Metal Oxide		

GENERATOR CERTIFICATION: I hereby certify and declare that the contents of this consignment are fully and accurately described above by proper shipping name and are classified, packed, marked, and labeled, and are in all respects in proper condition for transport by highway according to applicable international and national government regulations.

Printed/Typed Name	Signature		Date
Robert Miller for MHFLS at GTEOSI			5/19/2005
Transporter	Signature		Date
Priority Transport			5/19/2005

Straight Bill of Lading

Shipper	MHF-LS For GTE Operations Support Incorporated 140 Contiague Rock Road Hicksville, NY 11369	Date: 5/19/2005
Consigned to	MHF-LS @ New York-Atlantic Rail Spur Hicksville, NY 11369	Load in Gondola # NHRX 1032
Emergency Contact:	CHEMTREC 800-424-9300	

Total All Trucks
190880

TR: TL:

Quantity	Description		Net Waste Weight
2	Soil, DOT Non-Regulated Waste, Containing		
	Radioactive Materials.		
	Package ID Number		**Pounds:**
	Liner	9169	21950
	Liner	9172	21290
			Total:
			43240
	Packages do not meet the DOT "radioactive material"		
	definition in 49 CFR 173.403.		
	Radionuclide: Ac-227,Th-227, Th232, Th230,Pa-231,Ra-223		
	Ra-226,Ra-228,Th-228,U-234,U-nat,		
	Total Activity: 52.64148 MBq		
	Physical Form: Solid		
	Chemical Form: Metal Oxide		

GENERATOR CERTIFICATION: I hereby certify and declare that the contents of this consignment are fully and accurately described above by proper shipping name and are classified, packed, marked, and labeled, and are in all respects in proper condition for transport by highway according to applicable international and national government regulations

Printed/Typed Name	Signature		Date
Robert Miller for MHFLS at GTEOSI			5/19/2005
Transporter	Signature		Date
Priority Transport			5/19/2005

NHRX	Shipment #		0												
	new	Bag #		9169	9172	9173	9174	9129	9164	9175	9180	9218	9166	9213	
	Storage Loc.			21950	21290	19880	17020	13430	16630	18790	15700	21010	11620	13560	
1032	0840-01-982		200000												

container #
9169

shipping check sheet (For Form 540)

	Ac-227		corrected	activity mBq	activity mCi	activity Ci	SNM	source	
		5.820E-002	5.820E-002	2.1381E-02	5.7787E-04	5.7787E-07	grams	kg	
grams			pCi/g				8.0259E-09	8.0259E-12	
9928980		7.2000E+01							
	Pa-231			activity mBq	activity mCi	activity Ci	SNM	source	
21870		2.594E-001	2.594E-001	9.5296E-02	2.5756E-03	2.5756E-06	grams	kg	
grams							5.4800E-05	5.4800E-08	
9928980		4.7000E-02							
	Ra-223			activity mBq	activity mCi	activity Ci	SNM	source	
21870		9.721E-002	9.721E-002	3.5712E-02	9.6520E-04	9.6520E-07	grams	kg	
grams							1.8925E-11	1.8925E-14	
9928980		5.1000E+04							
	Ra-226			activity mBq	activity mCi	activity Ci	SNM	source	
21870		4.970E-001	3.6082E-01	1.3256E-01	3.5826E-03	3.5826E-06	grams	kg	1.37741
grams							3.5826E-06	3.5826E-09	
9928980		1.0000E+00							
	Ra228			activity mBq	activity mCi	activity Ci	SNM	source	
21870		9.303E-001	1.3196E+00	4.8478E-01	1.3102E-02	1.3102E-05	grams	kg	0.705
grams							4.8526E-08	4.8526E-11	
9928980		2.7000E+02							
	TH-227			activity mBq	activity mCi	activity Ci	SNM	source	
21870		5.820E-002	5.820E-002	2.1381E-02	5.7787E-04	5.7787E-07	grams	kg	
grams							1.8641E-11	1.8641E-14	
9928980		3.1000E+04							
	Th-228			activity mBq	activity mCi	activity Ci	SNM	source	
21870		9.121E-001	1.6473E+00	6.0515E-01	1.6356E-02	1.6356E-05	grams	kg	
grams							1.9946E-08	1.9946E-11	0.55371
9928980		8.2000E+02							
	Th-230			activity mBq	activity mCi	activity Ci	SNM	source	
21870		9.303E-001	6.9028E-01	2.5359E-01	6.8538E-03	6.8538E-06	grams	kg	
grams							3.2637E-04	3.2637E-07	1.34771
9928980		2.1000E-02							
	TH-232			activity mBq	activity mCi	activity Ci	SNM	source	
21870		9.303E-001	1.3196E+00	4.8478E-01	1.3102E-02	1.3102E-05	grams	kg	0.705
grams							1.1911E+02	1.1911E-01	
9928980		1.1000E-07							
	U-234			activity mBq	activity mCi	activity Ci	SNM	source	
21870		2.103E+001	1.8675E+01	6.8605E+00	1.8542E-01	1.8542E-04	grams	kg	1.12613
grams							2.9906E-02	2.9906E-05	
9928980		6.2000E-03							
	U-235			activity mBq	activity mCi	activity Ci	SNM	source	
21870		1.119E+000	1.4328E+00	5.2636E-01	1.4226E-02	1.4226E-05	grams	kg	0.781
grams							6.4664E+00	6.4664E-03	
9928980		2.2000E-06							
	U-238			activity mBq	activity mCi	activity Ci	SNM	source	
21870		2.103E+001	2.8381E+01	1.0426E+01	2.8179E-01	2.8179E-04	grams	kg	0.741
grams							8.2879E+02	8.2879E-01	
9928980		3.4000E-07							

Totals for all flag 1 data

			corrected	activity mBq	activity mCi	activity Ci	SNM	source	
21870		4.7852E+01	5.4240E+01	1.9948E+01	5.3913E-01	5.3913E-04	grams	kg	flag1 data
			pCi/g	541 will be < than the 540 (MDA not added)			6.4664E+00	9.4793E-01	
173.5714286				data for NORM					
	U-nat		corrected pCi/g	activity mBq	activity mCi	activity Ci		source	
		2.2149E+01	2.9813E+01	1.0953E+01	2.9602E-01	2.9602E-04		kg	
								4.1692E-01	
		7.1000E-07							

U-nat		corrected pCi/g	activity mBq	activity mCi	activity Ci		source	
	4.7852E+01	5.4240E+01	1.9948E+01	5.3913E-01	5.3913E-04		kg total	norm data
							[illegible]	

container #
9172

shipping check sheet (For Form 540)

	Ac-227		corrected	activity mBq	activity mCi	activity Ci	SNM	source	
		7.630E-002	7.630E-002	2.7185E-02	7.3472E-04	7.3472E-07	grams	kg	
grams			pCi/g				1.0204E-08	1.0204E-11	
9629340		7.2000E+01							
	Pa-231			activity mBq	activity mCi	activity Ci	SNM	source	
21210		2.743E-001	2.743E-001	9.7729E-02	2.6413E-03	2.6413E-06	grams	kg	
grams							5.6198E-05	5.6198E-08	
9629340		4.7000E-02							
	Ra-223			activity mBq	activity mCi	activity Ci	SNM	source	
21210		1.993E-001	1.993E-001	7.1008E-02	1.9191E-03	1.9191E-06	grams	kg	
grams							3.7630E-11	3.7630E-14	
9629340		5.1000E+04							
	Ra-226			activity mBq	activity mCi	activity Ci	SNM	source	
21210		4.869E-001	3.5349E-01	1.2594E-01	3.4039E-03	3.4039E-06	grams	kg	1.37741
grams							3.4039E-06	3.4039E-09	
9629340		1.0000E+00							
	Ra228			activity mBq	activity mCi	activity Ci	SNM	source	
21210		1.685E+000	2.3901E+00	8.5155E-01	2.3015E-02	2.3015E-05	grams	kg	0.705
grams							8.5240E-08	8.5240E-11	
9629340		2.7000E+02							
	TH-227			activity mBq	activity mCi	activity Ci	SNM	source	
21210		7.630E-002	7.630E-002	2.7185E-02	7.3472E-04	7.3472E-07	grams	kg	
grams							2.3701E-11	2.3701E-14	
9629340		3.1000E+04							
	Th-228			activity mBq	activity mCi	activity Ci	SNM	source	
21210		1.600E+000	2.8896E+00	1.0295E+00	2.7825E-02	2.7825E-05	grams	kg	
grams							3.3933E-08	3.3933E-11	0.55371
9629340		8.2000E+02							
	Th-230			activity mBq	activity mCi	activity Ci	SNM	source	
21210		1.685E+000	1.2503E+00	4.4545E-01	1.2039E-02	1.2039E-05	grams	kg	
grams							5.7330E-04	5.7330E-07	1.34771
9629340		2.1000E-02							
	TH-232			activity mBq	activity mCi	activity Ci	SNM	source	
21210		1.685E+000	2.3901E+00	8.5155E-01	2.3015E-02	2.3015E-05	grams	kg	0.705
grams							2.0923E+02	2.0923E-01	
9629340		1.1000E-07							
	U-234			activity mBq	activity mCi	activity Ci	SNM	source	
21210		5.967E+001	5.2987E+01	1.8878E+01	5.1023E-01	5.1023E-04	grams	kg	1.12613
grams							8.2295E-02	8.2295E-05	
9629340		6.2000E-03							
	U-235			activity mBq	activity mCi	activity Ci	SNM	source	
21210		2.950E+000	3.7772E+00	1.3458E+00	3.6372E-02	3.6372E-05	grams	kg	0.781
grams							1.6533E+01	1.6533E-02	
9629340		2.2000E-06							
	U-238			activity mBq	activity mCi	activity Ci	SNM	source	
21210		5.967E+001	8.0526E+01	2.8690E+01	7.7542E-01	7.7542E-04	grams	kg	0.741
grams							2.2806E+03	2.2806E+00	
9629340		3.4000E-07							

Totals for all flag 1 data

			corrected	activity mBq	activity mCi	activity Ci	SNM	source	
21210		1.3006E+02	1.4711E+02	5.2442E+01	1.4173E+00	1.4173E-03	grams	kg	flag1 data
			pCi/g	541 will be < than the 540 (MDA not added)			1.6533E+01	2.4899E+00	
168.3333333				data for NORM					
	U-nat		corrected pCi/g	activity mBq	activity mCi	activity Ci		source	
		6.2620E+01	8.4304E+01	3.0036E+01	8.1179E-01	8.1179E-04		kg	
								1.1434E+00	
		7.1000E-07							

	U-nat		corrected pCi/g	activity mBq	activity mCi	activity Ci		source	
		1.3006E+02	1.4711E+02	5.2442E+01	1.4173E+00	1.4173E-03		kg total	norm data
								1.3527E+00	

container #
9173

shipping check sheet (For Form 540)

	Ac-227		corrected	activity mBq	activity mCi	activity Ci	SNM	source	
		7.053E-002	7.053E-002	2.3458E-02	6.3401E-04	6.3401E-07	grams	kg	
grams			pCi/g				8.8057E-09	8.8057E-12	
8989200		7.2000E+01							
	Pa-231			activity mBq	activity mCi	activity Ci	SNM	source	
19800		1.544E-001	1.544E-001	5.1354E-02	1.3879E-03	1.3879E-06	grams	kg	
grams							2.9530E-05	2.9530E-08	
8989200		4.7000E-02							
	Ra-223			activity mBq	activity mCi	activity Ci	SNM	source	
19800		7.314E-002	7.314E-002	2.4326E-02	6.5747E-04	6.5747E-07	grams	kg	
grams							1.2892E-11	1.2892E-14	
8989200		5.1000E+04							
	Ra-226			activity mBq	activity mCi	activity Ci	SNM	source	
19800		4.553E-001	3.3055E-01	1.0994E-01	2.9714E-03	2.9714E-06	grams	kg	1.37741
grams							2.9714E-06	2.9714E-09	
8989200		1.0000E+00							
	Ra228			activity mBq	activity mCi	activity Ci	SNM	source	
19800		7.002E-001	9.9319E-01	3.3034E-01	8.9280E-03	8.9280E-06	grams	kg	0.705
grams							3.3067E-08	3.3067E-11	
8989200		2.7000E+02							
	TH-227			activity mBq	activity mCi	activity Ci	SNM	source	
19800		7.053E-002	7.053E-002	2.3458E-02	6.3401E-04	6.3401E-07	grams	kg	
grams							2.0452E-11	2.0452E-14	
8989200		3.1000E+04							
	Th-228			activity mBq	activity mCi	activity Ci	SNM	source	
19800		5.857E-001	1.0578E+00	3.5182E-01	9.5085E-03	9.5085E-06	grams	kg	
grams							1.1596E-08	1.1596E-11	0.55371
8989200		8.2000E+02							
	Th-230			activity mBq	activity mCi	activity Ci	SNM	source	
19800		7.002E-001	5.1955E-01	1.7280E-01	4.6703E-03	4.6703E-06	grams	kg	
grams							2.2240E-04	2.2240E-07	1.34771
8989200		2.1000E-02							
	TH-232			activity mBq	activity mCi	activity Ci	SNM	source	
19800		7.002E-001	9.9319E-01	3.3034E-01	8.9280E-03	8.9280E-06	grams	kg	0.705
grams							8.1164E+01	8.1164E-02	
8989200		1.1000E-07							
	U-234			activity mBq	activity mCi	activity Ci	SNM	source	
19800		8.759E+000	7.7780E+00	2.5870E+00	6.9918E-02	6.9918E-05	grams	kg	1.12613
grams							1.1277E-02	1.1277E-05	
8989200		6.2000E-03							
	U-235			activity mBq	activity mCi	activity Ci	SNM	source	
19800		5.450E-001	6.9782E-01	2.3210E-01	6.2729E-03	6.2729E-06	grams	kg	0.781
grams							2.8513E+00	2.8513E-03	
8989200		2.2000E-06							
	U-238			activity mBq	activity mCi	activity Ci	SNM	source	
19800		8.759E+000	1.1821E+01	3.9315E+00	1.0626E-01	1.0626E-04	grams	kg	0.741
grams							3.1252E+02	3.1252E-01	
8989200		3.4000E-07							

Totals for all flag 1 data

			corrected	activity mBq	activity mCi	activity Ci	SNM	source	
19800		2.1573E+01	2.4489E+01	8.1684E+00	2.2077E-01	2.2077E-04	grams	kg	flag1 data
			pCi/g	541 will be < than the 540 (MDA not added)			2.8513E+00	3.9370E-01	
157.1428571				data for NORM					
	U-nat		corrected pCi/g	activity mBq	activity mCi	activity Ci		source	
		9.3040E+00	1.2618E+01	4.1636E+00	1.1253E-01	1.1253E-04		kg	
								1.5849E-01	
		7.1000E-07							

	U-nat		corrected pCi/g	activity mBq	activity mCi	activity Ci	source	
		2.1573E+01	2.4489E+01	8.1684E+00	2.2077E-01	2.2077E-04	kg total	norm data
							2.3987E-01	

container #
9174

shipping check sheet (For Form 540)

	Ac-227		corrected	activity mBq	activity mCi	activity Ci	SNM	source	
		5.758E-002	5.758E-002	1.6385E-02	4.4283E-04	4.4283E-07	grams	kg	
grams			pCi/g				6.1505E-09	6.1505E-12	
7690760		7.2000E+01							
	Pa-231			activity mBq	activity mCi	activity Ci	SNM	source	
16940		1.800E-001	1.800E-001	5.1220E-02	1.3843E-03	1.3843E-06	grams	kg	
grams							2.9454E-05	2.9454E-08	
7690760		4.7000E-02							
	Ra-223			activity mBq	activity mCi	activity Ci	SNM	source	
16940		3.599E-002	3.599E-002	1.0241E-02	2.7679E-04	2.7679E-07	grams	kg	
grams							5.4273E-12	5.4273E-15	
7690760		5.1000E+04							
	Ra-226			activity mBq	activity mCi	activity Ci	SNM	source	
16940		4.075E-001	2.9585E-01	8.4185E-02	2.2753E-03	2.2753E-06	grams	kg	1.37741
grams							2.2753E-06	2.2753E-09	
7690760		1.0000E+00							
	Ra228			activity mBq	activity mCi	activity Ci	SNM	source	
16940		9.250E-001	1.3121E+00	3.7336E-01	1.0091E-02	1.0091E-05	grams	kg	0.705
grams							3.7373E-08	3.7373E-11	
7690760		2.7000E+02							
	TH-227			activity mBq	activity mCi	activity Ci	SNM	source	
16940		5.758E-002	5.758E-002	1.6385E-02	4.4283E-04	4.4283E-07	grams	kg	
grams							1.4285E-11	1.4285E-14	
7690760		3.1000E+04							
	Th-228			activity mBq	activity mCi	activity Ci	SNM	source	
16940		9.438E-001	1.7045E+00	4.8503E-01	1.3109E-02	1.3109E-05	grams	kg	
grams							1.5986E-08	1.5986E-11	0.55371
7690760		8.2000E+02							
	Th-230			activity mBq	activity mCi	activity Ci	SNM	source	
16940		9.250E-001	6.8635E-01	1.9531E-01	5.2785E-03	5.2785E-06	grams	kg	
grams							2.5136E-04	2.5136E-07	1.34771
7690760		2.1000E-02							
	TH-232			activity mBq	activity mCi	activity Ci	SNM	source	
16940		9.250E-001	1.3121E+00	3.7336E-01	1.0091E-02	1.0091E-05	grams	kg	0.705
grams							9.1734E+01	9.1734E-02	
7690760		1.1000E-07							
	U-234			activity mBq	activity mCi	activity Ci	SNM	source	
16940		1.795E+001	1.5940E+01	4.5357E+00	1.2259E-01	1.2259E-04	grams	kg	1.12613
grams							1.9772E-02	1.9772E-05	
7690760		6.2000E-03							
	U-235			activity mBq	activity mCi	activity Ci	SNM	source	
16940		1.114E+000	1.4264E+00	4.0589E-01	1.0970E-02	1.0970E-05	grams	kg	0.781
grams							4.9863E+00	4.9863E-03	
7690760		2.2000E-06							
	U-238			activity mBq	activity mCi	activity Ci	SNM	source	
16940		1.795E+001	2.4224E+01	6.8931E+00	1.8630E-01	1.8630E-04	grams	kg	0.741
grams							5.4794E+02	5.4794E-01	
7690760		3.4000E-07							

Totals for all flag 1 data

			corrected	activity mBq	activity mCi	activity Ci	SNM	source	
16940		4.1471E+01	4.7174E+01	1.3440E+01	3.6325E-01	3.6325E-04	grams	kg	flag1 data
			pCi/g	541 will be < than the 540 (MDA not added)			4.9863E+00	6.3970E-01	
134.4444444				data for NORM					
	U-nat		corrected pCi/g	activity mBq	activity mCi	activity Ci		source	
		1.9064E+01	2.5659E+01	7.2990E+00	1.9727E-01	1.9727E-04		kg	
								2.7785E-01	
		7.1000E-07							

U-nat		corrected pCi/g	activity mBq	activity mCi	activity Ci		source	
	4.1471E+01	4.7174E+01	[illegible]	3.6325E-01	3.6325E-04		kg total	norm data
							[illegible]	

container #
9129

shipping check sheet (For Form 540)

	Ac-227		corrected	activity mBq	activity mCi	activity Ci	SNM	source	
		3.483E-002	3.483E-002	7.8107E-03	2.1110E-04	2.1110E-07	grams	kg	
grams			pCi/g				2.9320E-09	2.9320E-12	
6060900		7.2000E+01							
	Pa-231			activity mBq	activity mCi	activity Ci	SNM	source	
13350		1.673E-001	1.673E-001	3.7518E-02	1.0140E-03	1.0140E-06	grams	kg	
grams							2.1574E-05	2.1574E-08	
6060900		4.7000E-02							
	Ra-223			activity mBq	activity mCi	activity Ci	SNM	source	
13350		9.490E-002	9.490E-002	2.1282E-02	5.7518E-04	5.7518E-07	grams	kg	
grams							1.1278E-11	1.1278E-14	
6060900		5.1000E+04							
	Ra-226			activity mBq	activity mCi	activity Ci	SNM	source	
13350		2.344E-001	1.7017E-01	3.8162E-02	1.0314E-03	1.0314E-06	grams	kg	1.37741
grams							1.0314E-06	1.0314E-09	
6060900		1.0000E+00							
	Ra228			activity mBq	activity mCi	activity Ci	SNM	source	
13350		7.845E-001	1.1128E+00	2.4954E-01	6.7444E-03	6.7444E-06	grams	kg	0.705
grams							2.4979E-08	2.4979E-11	
6060900		2.7000E+02							
	TH-227			activity mBq	activity mCi	activity Ci	SNM	source	
13350		3.483E-002	3.483E-002	7.8107E-03	2.1110E-04	2.1110E-07	grams	kg	
grams							6.8097E-12	6.8097E-15	
6060900		3.1000E+04							
	Th-228			activity mBq	activity mCi	activity Ci	SNM	source	
13350		8.730E-001	1.5766E+00	3.5357E-01	9.5558E-03	9.5558E-06	grams	kg	
grams							1.1653E-08	1.1653E-11	0.55371
6060900		8.2000E+02							
	Th-230			activity mBq	activity mCi	activity Ci	SNM	source	
13350		7.845E-001	5.8210E-01	1.3054E-01	3.5280E-03	3.5280E-06	grams	kg	
grams							1.6800E-04	1.6800E-07	1.34771
6060900		2.1000E-02							
	TH-232			activity mBq	activity mCi	activity Ci	SNM	source	
13350		7.845E-001	1.1128E+00	2.4954E-01	6.7444E-03	6.7444E-06	grams	kg	0.705
grams							6.1312E+01	6.1312E-02	
6060900		1.1000E-07							
	U-234			activity mBq	activity mCi	activity Ci	SNM	source	
13350		2.036E+001	1.8080E+01	4.0544E+00	1.0958E-01	1.0958E-04	grams	kg	1.12613
grams							1.7674E-02	1.7674E-05	
6060900		6.2000E-03							
	U-235			activity mBq	activity mCi	activity Ci	SNM	source	
13350		1.252E+000	1.6031E+00	3.5949E-01	9.7161E-03	9.7161E-06	grams	kg	0.781
grams							4.4164E+00	4.4164E-03	
6060900		2.2000E-06							
	U-238			activity mBq	activity mCi	activity Ci	SNM	source	
13350		2.036E+001	2.7476E+01	6.1617E+00	1.6653E-01	1.6653E-04	grams	kg	0.741
grams							4.8980E+02	4.8980E-01	
6060900		3.4000E-07							

Totals for all flag 1 data

			corrected	activity mBq	activity mCi	activity Ci	SNM	source	
13350		4.5765E+01	5.2011E+01	1.1671E+01	3.1544E-01	3.1544E-04	grams	kg	flag1 data
			pCi/g	541 will be < than the 540 (MDA not added)			4.4164E+00	5.5113E-01	
105.952381				data for NORM					
	U-nat		corrected pCi/g	activity mBq	activity mCi	activity Ci		source	
		2.1612E+01	2.0070E+01	6.5212E+00	1.7625E-01	1.7625E-04		kg	
								2.4824E-01	
		7.1000E-07							

	U-nat		corrected pCi/g	activity mBq	activity mCi	activity Ci		source	
		4.5765E+01	5.2011E+01	1.1671E+01	3.1544E-01	3.1544E-04		kg total	norm data
								3.0957E-01	

container #
9164

shipping check sheet (For Form 540)

	Ac-227		corrected	activity mBq	activity mCi	activity Ci	SNM	source	
		4.208E-002	4.208E-002	1.1699E-02	3.1618E-04	3.1618E-07	grams	kg	
grams			pCi/g				4.3913E-09	4.3913E-12	
7513700		7.2000E+01							
	Pa-231			activity mBq	activity mCi	activity Ci	SNM	source	
16550		1.383E-001	1.383E-001	3.8448E-02	1.0391E-03	1.0391E-06	grams	kg	
grams							2.2109E-05	2.2109E-08	
7513700		4.7000E-02							
	Ra-223			activity mBq	activity mCi	activity Ci	SNM	source	
16550		6.937E-002	6.937E-002	1.9285E-02	5.2123E-04	5.2123E-07	grams	kg	
grams							1.0220E-11	1.0220E-14	
7513700		5.1000E+04							
	Ra-226			activity mBq	activity mCi	activity Ci	SNM	source	
16550		1.601E-001	1.1623E-01	3.2313E-02	8.7334E-04	8.7334E-07	grams	kg	1.37741
grams							8.7334E-07	8.7334E-10	
7513700		1.0000E+00							
	Ra228			activity mBq	activity mCi	activity Ci	SNM	source	
16550		2.655E-001	3.7660E-01	1.0470E-01	2.8296E-03	2.8296E-06	grams	kg	0.705
grams							1.0480E-08	1.0480E-11	
7513700		2.7000E+02							
	TH-227			activity mBq	activity mCi	activity Ci	SNM	source	
16550		4.208E-002	4.208E-002	1.1699E-02	3.1618E-04	3.1618E-07	grams	kg	
grams							1.0199E-11	1.0199E-14	
7513700		3.1000E+04							
	Th-228			activity mBq	activity mCi	activity Ci	SNM	source	
16550		1.935E-001	3.4946E-01	9.7153E-02	2.6257E-03	2.6257E-06	grams	kg	
grams							3.2021E-09	3.2021E-12	0.55371
7513700		8.2000E+02							
	Th-230			activity mBq	activity mCi	activity Ci	SNM	source	
16550		2.655E-001	1.9700E-01	5.4768E-02	1.4802E-03	1.4802E-06	grams	kg	
grams							7.0486E-05	7.0486E-08	1.34771
7513700		2.1000E-02							
	TH-232			activity mBq	activity mCi	activity Ci	SNM	source	
16550		2.655E-001	3.7660E-01	1.0470E-01	2.8296E-03	2.8296E-06	grams	kg	0.705
grams							2.5724E+01	2.5724E-02	
7513700		1.1000E-07							
	U-234			activity mBq	activity mCi	activity Ci	SNM	source	
16550		1.137E+000	1.0097E+00	2.8069E-01	7.5862E-03	7.5862E-06	grams	kg	1.12613
grams							1.2236E-03	1.2236E-06	
7513700		6.2000E-03							
	U-235			activity mBq	activity mCi	activity Ci	SNM	source	
16550		2.065E-001	2.6440E-01	7.3506E-02	1.9867E-03	1.9867E-06	grams	kg	0.781
grams							9.0303E-01	9.0303E-04	
7513700		2.2000E-06							
	U-238			activity mBq	activity mCi	activity Ci	SNM	source	
16550		1.137E+000	1.5344E+00	4.2658E-01	1.1529E-02	1.1529E-05	grams	kg	0.741
grams							3.3909E+01	3.3909E-02	
7513700		3.4000E-07							

Totals for all flag 1 data

			corrected	activity mBq	activity mCi	activity Ci	SNM	source	
16550		3.9224E+00	4.4741E+00	1.2555E+00	3.3933E-02	3.3933E-05	grams	kg	flag1 data
			pCi/g	541 will be < than the 540 (MDA not added)			9.0303E-01	5.9634E-02	
131.3492063				data for NORM					
	U-nat		corrected pCi/g	activity mBq	activity mCi	activity Ci		source	
		1.3435E+00	[illegible]	5.0008E-01	1.3516E-02	1.3516E-05		kg	
								1.9036E-02	
		7.1000E-07							

U-nat		corrected pCi/g	activity mBq	activity mCi	activity Ci		source	
	3.9224E+00	4.4741E+00	1.2555E+00	3.3933E-02	3.3933E-05		kg total	norm data
							4.4762E-02	

container #
9175

shipping check sheet (For Form 540)

	Ac-227		corrected	activity mBq	activity mCi	activity Ci	SNM	source	
		4.252E-002	4.252E-002	1.3364E-02	3.6118E-04	3.6118E-07	grams	kg	
grams			pCi/g				5.0164E-09	5.0164E-12	
8494340		7.2000E+01							
	Pa-231			activity mBq	activity mCi	activity Ci	SNM	source	
18710		2.586E-001	2.586E-001	8.1276E-02	2.1966E-03	2.1966E-06	grams	kg	
grams							4.6737E-05	4.6737E-08	
8494340		4.7000E-02							
	Ra-223			activity mBq	activity mCi	activity Ci	SNM	source	
18710		5.552E-002	5.552E-002	1.7449E-02	4.7161E-04	4.7161E-07	grams	kg	
grams							9.2472E-12	9.2472E-15	
8494340		5.1000E+04							
	Ra-226			activity mBq	activity mCi	activity Ci	SNM	source	
18710		2.100E-001	1.5246E-01	4.7917E-02	1.2950E-03	1.2950E-06	grams	kg	1.37741
grams							1.2950E-06	1.2950E-09	
8494340		1.0000E+00							
	Ra228			activity mBq	activity mCi	activity Ci	SNM	source	
18710		3.146E-001	4.4624E-01	1.4025E-01	3.7905E-03	3.7905E-06	grams	kg	0.705
grams							1.4039E-08	1.4039E-11	
8494340		2.7000E+02							
	TH-227			activity mBq	activity mCi	activity Ci	SNM	source	
18710		4.252E-002	4.252E-002	1.3364E-02	3.6118E-04	3.6118E-07	grams	kg	
grams							1.1651E-11	1.1651E-14	
8494340		3.1000E+04							
	Th-228			activity mBq	activity mCi	activity Ci	SNM	source	
18710		4.056E-001	7.3251E-01	2.3022E-01	6.2222E-03	6.2222E-06	grams	kg	
grams							7.5881E-09	7.5881E-12	0.55371
8494340		8.2000E+02							
	Th-230			activity mBq	activity mCi	activity Ci	SNM	source	
18710		3.146E-001	2.3343E-01	7.3366E-02	1.9829E-03	1.9829E-06	grams	kg	
grams							9.4422E-05	9.4422E-08	1.34771
8494340		2.1000E-02							
	TH-232			activity mBq	activity mCi	activity Ci	SNM	source	
18710		3.146E-001	4.4624E-01	1.4025E-01	3.7905E-03	3.7905E-06	grams	kg	0.705
grams							3.4459E+01	3.4459E-02	
8494340		1.1000E-07							
	U-234			activity mBq	activity mCi	activity Ci	SNM	source	
18710		4.095E+000	3.6363E+00	1.1429E+00	3.0888E-02	3.0888E-05	grams	kg	1.12613
grams							4.9820E-03	4.9820E-06	
8494340		6.2000E-03							
	U-235			activity mBq	activity mCi	activity Ci	SNM	source	
18710		6.210E-001	7.9513E-01	2.4990E-01	6.7541E-03	6.7541E-06	grams	kg	0.781
grams							3.0701E+00	3.0701E-03	
8494340		2.2000E-06							
	U-238			activity mBq	activity mCi	activity Ci	SNM	source	
18710		4.095E+000	5.5263E+00	1.7369E+00	4.6942E-02	4.6942E-05	grams	kg	0.741
grams							1.3807E+02	1.3807E-01	
8494340		3.4000E-07							

Totals for all flag 1 data

			corrected	activity mBq	activity mCi	activity Ci	SNM	source	
18710		1.0770E+01	1.2325E+01	3.8871E+00	1.0506E-01	1.0506E-04	grams	kg	flag1 data
			pCi/g	541 will be < than the 540 (MDA not added)			3.0701E+00	1.7253E-01	
148.4920635				data for NORM					
	U-nat		corrected pCi/g	activity mBq	activity mCi	activity Ci		source	
		4.7160E+00	6.3215E+00	1.9868E+00	5.3697E-02	5.3697E-05		kg	
								7.5629E-02	
		7.1000E-07							

	U-nat		corrected pCi/g	activity mBq	activity mCi	activity Ci		source	
		1.0770E+01	1.2325E+01	3.8871E+00	1.0506E-01	1.0506E-04		kg total	norm data
								1.1008E-01	

container #
9180

shipping check sheet (For Form 540)

	Ac-227		corrected	activity mBq	activity mCi	activity Ci	SNM	source	
		4.248E-002	4.248E-002	1.1146E-02	3.0125E-04	3.0125E-07	grams	kg	
grams			pCi/g				4.1840E-09	4.1840E-12	
7091480		7.2000E+01							
	Pa-231			activity mBq	activity mCi	activity Ci	SNM	source	
15620		4.654E-001	4.654E-001	1.2211E-01	3.3004E-03	3.3004E-06	grams	kg	
grams							7.0221E-05	7.0221E-08	
7091480		4.7000E-02							
	Ra-223			activity mBq	activity mCi	activity Ci	SNM	source	
15620		1.201E-001	1.201E-001	3.1512E-02	8.5169E-04	8.5169E-07	grams	kg	
grams							1.6700E-11	1.6700E-14	
7091480		5.1000E+04							
	Ra-226			activity mBq	activity mCi	activity Ci	SNM	source	
15620		2.079E-001	1.5094E-01	3.9603E-02	1.0704E-03	1.0704E-06	grams	kg	1.37741
grams							1.0704E-06	1.0704E-09	
7091480		1.0000E+00							
	Ra228			activity mBq	activity mCi	activity Ci	SNM	source	
15620		4.031E-002	5.7177E-02	1.5002E-02	4.0547E-04	4.0547E-07	grams	kg	0.705
grams							1.5017E-09	1.5017E-12	
7091480		2.7000E+02							
	TH-227			activity mBq	activity mCi	activity Ci	SNM	source	
15620		4.248E-002	4.248E-002	1.1146E-02	3.0125E-04	3.0125E-07	grams	kg	
grams							9.7176E-12	9.7176E-15	
7091480		3.1000E+04							
	Th-228			activity mBq	activity mCi	activity Ci	SNM	source	
15620		1.836E-001	3.3158E-01	8.7002E-02	2.3514E-03	2.3514E-06	grams	kg	
grams							2.8676E-09	2.8676E-12	0.55371
7091480		8.2000E+02							
	Th-230			activity mBq	activity mCi	activity Ci	SNM	source	
15620		4.031E-002	2.9910E-02	7.8479E-03	2.1211E-04	2.1211E-07	grams	kg	
grams							1.0100E-05	1.0100E-08	1.34771
7091480		2.1000E-02							
	TH-232			activity mBq	activity mCi	activity Ci	SNM	source	
15620		4.031E-002	5.7177E-02	1.5002E-02	4.0547E-04	4.0547E-07	grams	kg	0.705
grams							3.6861E+00	3.6861E-03	
7091480		1.1000E-07							
	U-234			activity mBq	activity mCi	activity Ci	SNM	source	
15620		7.237E-001	6.4264E-01	1.6862E-01	4.5573E-03	4.5573E-06	grams	kg	1.12613
grams							7.3505E-04	7.3505E-07	
7091480		6.2000E-03							
	U-235			activity mBq	activity mCi	activity Ci	SNM	source	
15620		1.700E-001	2.1767E-01	5.7113E-02	1.5436E-03	1.5436E-06	grams	kg	0.781
grams							7.0164E-01	7.0164E-04	
7091480		2.2000E-06							
	U-238			activity mBq	activity mCi	activity Ci	SNM	source	
15620		7.237E-001	9.7665E-01	2.5626E-01	6.9259E-03	6.9259E-06	grams	kg	0.741
grams							2.0370E+01	2.0370E-02	
7091480		3.4000E-07							

Totals for all flag 1 data

			corrected	activity mBq	activity mCi	activity Ci	SNM	source	
15620		2.8003E+00	3.0917E+00	8.2237E-01	2.2226E-02	2.2226E-05	grams	kg	flag1 data
			pCi/g	541 will be < than the 540 (MDA not added)			7.0164E-01	2.4057E-02	
123.968254				data for NORM					
	U-nat		corrected pCi/g	activity mBq	activity mCi	activity Ci		source	
		8.9370E-01	1.1043E+00	3.1337E-01	8.4695E-03	8.4695E-06		kg	
								1.1929E-02	
		7.1000E-07							

	U-nat		corrected pCi/g	activity mBq	activity mCi	activity Ci		source	
		2.8003E+00	3.0917E+00	8.2237E-01	2.2226E-02	2.2226E-05		kg total	norm data
								[illegible]

container #
9218

*b132Wÿù

shipping check sheet (For Form 540)

	Ac-227		corrected	activity mBq	activity mCi	activity Ci	SNM	source	
		4.848E-002	4.848E-002	1.7045E-02	4.6067E-04	4.6067E-07	grams	kg	
grams			pCi/g				6.3982E-09	6.3982E-12	
9502220		7.2000E+01							
	Pa-231			activity mBq	activity mCi	activity Ci	SNM	source	
20930		1.379E-001	1.379E-001	4.8483E-02	1.3104E-03	1.3104E-06	grams	kg	
grams							2.7880E-05	2.7880E-08	
9502220		4.7000E-02							
	Ra-223			activity mBq	activity mCi	activity Ci	SNM	source	
20930		4.385E-002	4.385E-002	1.5417E-02	4.1667E-04	4.1667E-07	grams	kg	
grams							8.1700E-12	8.1700E-15	
9502220		5.1000E+04							
	Ra-226			activity mBq	activity mCi	activity Ci	SNM	source	
20930		1.882E-001	1.3663E-01	4.8038E-02	1.2983E-03	1.2983E-06	grams	kg	1.37741
grams							1.2983E-06	1.2983E-09	
9502220		1.0000E+00							
	Ra228			activity mBq	activity mCi	activity Ci	SNM	source	
20930		5.033E-002	7.1390E-02	2.5099E-02	6.7836E-04	6.7836E-07	grams	kg	0.705
grams							2.5125E-09	2.5125E-12	
9502220		2.7000E+02							
	TH-227			activity mBq	activity mCi	activity Ci	SNM	source	
20930		4.848E-002	4.848E-002	1.7045E-02	4.6067E-04	4.6067E-07	grams	kg	
grams							1.4860E-11	1.4860E-14	
9502220		3.1000E+04							
	Th-228			activity mBq	activity mCi	activity Ci	SNM	source	
20930		1.443E-001	2.6061E-01	9.1624E-02	2.4763E-03	2.4763E-06	grams	kg	
grams							3.0199E-09	3.0199E-12	0.55371
9502220		8.2000E+02							
	Th-230			activity mBq	activity mCi	activity Ci	SNM	source	
20930		5.033E-002	3.7345E-02	1.3130E-02	3.5486E-04	3.5486E-07	grams	kg	
grams							1.6898E-05	1.6898E-08	1.34771
9502220		2.1000E-02							
	TH-232			activity mBq	activity mCi	activity Ci	SNM	source	
20930		5.033E-002	7.1390E-02	2.5099E-02	6.7836E-04	6.7836E-07	grams	kg	0.705
grams							6.1669E+00	6.1669E-03	
9502220		1.1000E-07							
	U-234			activity mBq	activity mCi	activity Ci	SNM	source	
20930		1.171E+000	1.0398E+00	3.6559E-01	9.8808E-03	9.8808E-06	grams	kg	1.12613
grams							1.5937E-03	1.5937E-06	
9502220		6.2000E-03							
	U-235			activity mBq	activity mCi	activity Ci	SNM	source	
20930		1.112E-001	1.4238E-01	5.0059E-02	1.3529E-03	1.3529E-06	grams	kg	0.781
grams							6.1497E-01	6.1497E-04	
9502220		2.2000E-06							
	U-238			activity mBq	activity mCi	activity Ci	SNM	source	
20930		1.171E+000	1.5803E+00	5.5560E-01	1.5016E-02	1.5016E-05	grams	kg	0.741
grams							4.4166E+01	4.4166E-02	
9502220		3.4000E-07							

Totals for all flag 1 data

			corrected	activity mBq	activity mCi	activity Ci	SNM	source	
20930		3.2154E+00	3.5701E+00	1.2722E+00	3.4385E-02	3.4385E-05	grams	kg	flag1 data
			pCi/g	541 will be < than the 540 (MDA not added)			6.1497E-01	5.0334E-02	
166.1111111				data for NORM					
	U-nat		corrected pCi/g	activity mBq	activity mCi	activity Ci		source	
		1.2822E+00	1.7227E+00	6.0566E-01	1.6369E-02	1.6369E-05		kg	
								2.3055E-02	
		7.1000E-07							

U-nat		corrected pCi/g	activity mBq	activity mCi	activity Ci		source	
	3.2154E+00	3.5701E+00	1.2722E+00	3.4385E-02	3.4385E-05		kg total	norm data
							[illegible]	

container #
9166

shipping check sheet (For Form 540)

	Ac-227		corrected	activity mBq	activity mCi	activity Ci	SNM	source	
		3.966E-002	3.966E-002	7.6880E-03	2.0779E-04	2.0779E-07	grams	kg	
grams			pCi/g				2.8859E-09	2.8859E-12	
5239160		7.2000E+01							
	Pa-231			activity mBq	activity mCi	activity Ci	SNM	source	
11540		1.775E-001	1.775E-001	3.4408E-02	9.2995E-04	9.2995E-07	grams	kg	
grams							1.9786E-05	1.9786E-08	
5239160		4.7000E-02							
	Ra-223			activity mBq	activity mCi	activity Ci	SNM	source	
11540		3.185E-002	3.185E-002	6.1741E-03	1.6687E-04	1.6687E-07	grams	kg	
grams							3.2719E-12	3.2719E-15	
5239160		5.1000E+04							
	Ra-226			activity mBq	activity mCi	activity Ci	SNM	source	
11540		1.698E-001	1.2327E-01	2.3897E-02	6.4586E-04	6.4586E-07	grams	kg	1.37741
grams							6.4586E-07	6.4586E-10	
5239160		1.0000E+00							
	Ra228			activity mBq	activity mCi	activity Ci	SNM	source	
11540		2.226E-001	3.1574E-01	6.1207E-02	1.6542E-03	1.6542E-06	grams	kg	0.705
grams							6.1268E-09	6.1268E-12	
5239160		2.7000E+02							
	TH-227			activity mBq	activity mCi	activity Ci	SNM	source	
11540		3.966E-002	3.966E-002	7.6880E-03	2.0779E-04	2.0779E-07	grams	kg	
grams							6.7027E-12	6.7027E-15	
5239160		3.1000E+04							
	Th-228			activity mBq	activity mCi	activity Ci	SNM	source	
11540		2.309E-001	4.1701E-01	8.0836E-02	2.1848E-03	2.1848E-06	grams	kg	
grams							2.6643E-09	2.6643E-12	0.55371
5239160		8.2000E+02							
	Th-230			activity mBq	activity mCi	activity Ci	SNM	source	
11540		2.226E-001	1.6517E-01	3.2018E-02	8.6535E-04	8.6535E-07	grams	kg	
grams							4.1207E-05	4.1207E-08	1.34771
5239160		2.1000E-02							
	TH-232			activity mBq	activity mCi	activity Ci	SNM	source	
11540		2.226E-001	3.1574E-01	6.1207E-02	1.6542E-03	1.6542E-06	grams	kg	0.705
grams							1.5039E+01	1.5039E-02	
5239160		1.1000E-07							
	U-234			activity mBq	activity mCi	activity Ci	SNM	source	
11540		7.844E-001	6.9654E-01	1.3502E-01	3.6493E-03	3.6493E-06	grams	kg	1.12613
grams							5.8860E-04	5.8860E-07	
5239160		6.2000E-03							
	U-235			activity mBq	activity mCi	activity Ci	SNM	source	
11540		1.786E-001	2.2868E-01	4.4330E-02	1.1981E-03	1.1981E-06	grams	kg	0.781
grams							5.4459E-01	5.4459E-04	
5239160		2.2000E-06							
	U-238			activity mBq	activity mCi	activity Ci	SNM	source	
11540		7.844E-001	1.0586E+00	2.0520E-01	5.5460E-03	5.5460E-06	grams	kg	0.741
grams							1.6312E+01	1.6312E-02	
5239160		3.4000E-07							

Totals for all flag 1 data

			corrected	activity mBq	activity mCi	activity Ci	SNM	source	
11540		3.1046E+00	3.5697E+00	6.9968E-01	1.8910E-02	1.8910E-05	grams	kg	flag1 data
			pCi/g	541 will be < than the 540 (MDA not added)			5.4459E-01	3.1351E-02	
91.58730159				data for NORM					
	U-nat		corrected pCi/g	activity mBq	activity mCi	activity Ci		source	
		9.6300E-01	1.2673E+00	2.4953E-01	6.7441E-03	6.7441E-06		kg	
								9.4987E-03	
		7.1000E-07							

	U-nat		corrected pCi/g	activity mBq	activity mCi	activity Ci		source	
		3.1046E+00	3.5697E+00	6.9968E-01	1.8910E-02	1.8910E-05		kg total	norm data
								2.4598E-02	

container #
9213

shipping check sheet (For Form 540)

	Ac-227		corrected	activity mBq	activity mCi	activity Ci	SNM	source	
		1.072E-001	1.072E-001	2.4274E-02	6.5606E-04	6.5606E-07	grams	kg	
grams			pCi/g				9.1119E-09	9.1119E-12	
6119920		7.2000E+01							
	Pa-231			activity mBq	activity mCi	activity Ci	SNM	source	
13480		1.707E-001	1.707E-001	3.8653E-02	1.0447E-03	1.0447E-06	grams	kg	
grams							2.2227E-05	2.2227E-08	
6119920		4.7000E-02							
	Ra-223			activity mBq	activity mCi	activity Ci	SNM	source	
13480		4.665E-002	4.665E-002	1.0563E-02	2.8549E-04	2.8549E-07	grams	kg	
grams							5.5979E-12	5.5979E-15	
6119920		5.1000E+04							
	Ra-226			activity mBq	activity mCi	activity Ci	SNM	source	
13480		2.223E-001	1.6139E-01	3.6545E-02	9.8769E-04	9.8769E-07	grams	kg	1.37741
grams							9.8769E-07	9.8769E-10	
6119920		1.0000E+00							
	Ra228			activity mBq	activity mCi	activity Ci	SNM	source	
13480		3.972E-001	5.6340E-01	1.2758E-01	3.4480E-03	3.4480E-06	grams	kg	0.705
grams							1.2770E-08	1.2770E-11	
6119920		2.7000E+02							
	TH-227			activity mBq	activity mCi	activity Ci	SNM	source	
13480		1.072E-001	1.072E-001	2.4274E-02	6.5606E-04	6.5606E-07	grams	kg	
grams							2.1163E-11	2.1163E-14	
6119920		3.1000E+04							
	Th-228			activity mBq	activity mCi	activity Ci	SNM	source	
13480		3.860E-001	6.9712E-01	1.5785E-01	4.2663E-03	4.2663E-06	grams	kg	
grams							5.2028E-09	5.2028E-12	0.55371
6119920		8.2000E+02							
	Th-230			activity mBq	activity mCi	activity Ci	SNM	source	
13480		3.972E-001	2.9472E-01	6.6736E-02	1.8037E-03	1.8037E-06	grams	kg	
grams							8.5889E-05	8.5889E-08	1.34771
6119920		2.1000E-02							
	TH-232			activity mBq	activity mCi	activity Ci	SNM	source	
13480		3.972E-001	5.6340E-01	1.2758E-01	3.4480E-03	3.4480E-06	grams	kg	0.705
grams							3.1345E+01	3.1345E-02	
6119920		1.1000E-07							
	U-234			activity mBq	activity mCi	activity Ci	SNM	source	
13480		1.534E+000	1.3622E+00	3.0845E-01	8.3365E-03	8.3365E-06	grams	kg	1.12613
grams							1.3446E-03	1.3446E-06	
6119920		6.2000E-03							
	U-235			activity mBq	activity mCi	activity Ci	SNM	source	
13480		2.272E-001	2.9091E-01	6.5873E-02	1.7803E-03	1.7803E-06	grams	kg	0.781
grams							8.0925E-01	8.0925E-04	
6119920		2.2000E-06							
	U-238			activity mBq	activity mCi	activity Ci	SNM	source	
13480		1.534E+000	2.0702E+00	4.6876E-01	1.2669E-02	1.2669E-05	grams	kg	0.741
grams							3.7263E+01	3.7263E-02	
6119920		3.4000E-07							

Totals for all flag 1 data

			corrected	activity mBq	activity mCi	activity Ci	SNM	source	
13480		5.5269E+00	6.3279E+00	1.4571E+00	3.9382E-02	3.9382E-05	grams	kg	flag1 data
			pCi/g	541 will be < than the 540 (MDA not added)			8.0925E-01	6.8609E-02	
108.984127				data for NORM					
	U-nat		corrected pCi/g	activity mBq	activity mCi	activity Ci		source	
		1.7612E+00	[redacted]	5.3464E-01	1.4450E-02	1.4450E-05		kg	
								2.0352E-02	
		7.1000E-07							

U-nat		corrected pCi/g	activity mBq	activity mCi	activity Ci		source	
	5.5269E+00	6.3279E+00	1.4571E+00	3.9382E-02	3.9382E-05		kg total	norm data
							[redacted]	

Posillico Bros. Asphalt Co.

1610 New Highway, Farmingdale, N.Y. 11735
Plant Tele: 293-2620, 2621

HOT STORAGE

15:32 11-11-04 TICKET NUMBER 9129

13430 lb GROSS

FORM 540 — Envirocare of Utah, Inc.

UNIFORM LOW-LEVEL RADIOACTIVE WASTE MANIFEST

SHIPPING PAPER

1. EMERGENCY TELEPHONE NUMBER (Include Area Code): 1-800-424-9300

ORGANIZATION: Chemtrec

2. IS THIS AN "EXCLUSIVE USE" SHIPMENT? ☐ YES ☑ NO

3. TOTAL NUMBER OF PACKAGES IDENTIFIED ON THIS MANIFEST ==> 11

4. DOES EPA REGULATED WASTE REQUIRING A MANIFEST ACCOMPANY THIS SHIPMENT? ☐ YES ☑ NO
If "Yes," provide Manifest Number ==>

EPA MANIFEST NUMBER

5. SHIPPER – NAME AND FACILITY
GTEOSI
140 Cantiague Rock RD
Hicksville, NY 11801

Utah Generator Site Access Permit No.: 020 508 1352

SHIPMENT NUMBER: NHRX-0989

CONTACT: Jean Agostinelli

6. CARRIER – Name and Address
Priority Transport Services, Inc.
391 Anthony Street
Schenectady, NY 12308

CONTACT: Dispatch

SIGNATURE – Authorized carrier acknowledging waste receipt

SHIPPER I.D. NUMBER: 0840-01-983

☐ COLLECTOR
☐ PROCESSOR
☑ GENERATOR TYPE (Specify) I

TELEPHONE NUMBER (Include Area Code): 516-932-9157

EPA I.D. NUMBER: NYR000104978

SHIPPING DATE: 05/19/2005

TELEPHONE (Include Area Code): 800-235-0069

DATE: 5-19-05

7. FORM 540 AND 540A — PAGE 1 OF 3 PAGE(S)
FORM 541 AND 541A — 6 PAGE(S)
FORM 542 AND 542A — None PAGE(S)
ADDITIONAL INFORMATION — None PAGE(S)

8. MANIFEST NUMBER (Use this number on all continuation pages): 0840-01-983

9. CONSIGNEE - Name and Facility
Envirocare of Utah, Inc.
Clive Disposal Site (Bulk Waste Facility)
Interstate 80, Exit 49
Clive, UT 84029

L 84921

CONTACT: Shipping and Receiving

TELEPHONE (Include Area Code): (435)884-0155

SIGNATURE – Authorized consignee acknowledging waste receipt

DATE: 6-3-05

10. CERTIFICATION
This is to certify that the herein-named materials are properly classified, described, packaged, marked, and labeled and are in proper condition for transportation according to the applicable regulations of the Department of Transportation. This also certifies that the materials are classified, packaged, marked, and labeled and are in proper condition for transportation and disposal as described in accordance with the requirements of 10 CFR Parts 20 and 61, or equivalent state regulations

AUTHORIZED SIGNATURE | TITLE: Broker | DATE: 6-9-05

11. U.S. DEPARTMENT OF TRANSPORTATION DESCRIPTION (Including proper shipping name, hazard class, UN ID number, and any additional information)	12. DOT LABEL "RADIOACTIVE"	13. TRANSPORT INDEX	14. PHYSICAL AND CHEMICAL FORM	15. INDIVIDUAL RADIONUCLIDES	16. TOTAL PACKAGE ACTIVITY MBq	mCi	17. LSA/SCO CLASS	18. TOTAL WEIGHT OR VOLUME (Use appropriate units)	19. IDENTIFICATION NUMBER OF PACKAGE
Soil,DOT Non-Regulated, containing Radionuclides	NA	NA	Solid / OXIDES	Ac-227 Pa-231 Ra-223 Ra-226 Ra-228 Th-227 Th-228 Th-230	3.8155E+01	1.0312E+00	NA	11010 LBS; 86.75 FT3	9153
				Th-232 U-234 U-Nat					
Soil,DOT Non-Regulated, containing Radionuclides	NA	NA	Solid / OXIDES	Ac-227 Pa-231 Ra-223 Ra-226 Ra-228 Th-227 Th-228 Th-230	1.4136E+01	3.8206E-01	NA	11780 LBS; 92.86 FT3	9158
				Th-232 U-234 U-Nat					
Soil,DOT Non-Regulated, containing Radionuclides	NA	NA	Solid / OXIDES	Ac-227 Pa-231 Ra-223 Ra-226 Ra-228 Th-227 Th-228 Th-230	1.4740E+01	3.9838E-01	NA	20250 LBS; 160.08 FT3	9177
				Th-232 U-234 U-Nat					

FOR CONSIGNEE USE ONLY

___ Record Waste Description Inadequate
___ Contamination or Leakage Detected
___ Unexpected Exposure Rates Detected
___ Labels, Markings, etc. Inadequate
___ Container Integrity Inadequate
___ Other
✓ No Violations Detected on this Shipment

20. TERMS AND CONDITIONS

A. HAZARDOUS MATERIALS: Generator represents & warrants that Waste Material __ is (or) ✓ is not a hazardous waste as defined in 40 CFR 261. Where the material is a hazardous waste, this shipment is also accompanied by a separate and completed hazardous waste manifest, along with the appropriate land-disposal restriction notice and/or certification as required by 40 CFR 268.1

B. TITLE: Upon acceptance at the disposal site by Envirocare of Utah, Inc., and all appropriate regulatory authorities, title to the Waste Material which conforms to Generator's representations herein shall thereupon transfer from Generator and be vested in Envirocare of Utah, Inc.

C. WASTE MATERIAL: Generator represents and warrants that all data set forth in this (UNIFORM LOW-LEVEL RADIOACTIVE WASTE MANIFEST) are true and correct in all respects and in accordance with all applicable governmental laws, rules, regulations and Envirocare of Utah Inc.'s facility license.

D. INDEMNIFICATION: Generator agrees to indemnify Envirocare of Utah, Inc., its officers, employees and agents against all losses and liability whatsoever if such losses or liability results from the failure of the Waste Material to conform in all material respects to the data supplied on the (UNIFORM LOW-LEVEL RADIOACTIVE WASTE MANIFEST,) or if this shipment fails to meet the standards prescribed by the Department of Transportation or any governmental agency having jurisdiction over such matters

FORM 540 (04-03)

FORM 540 — **Envirocare of Utah, Inc.**

UNIFORM LOW-LEVEL RADIOACTIVE WASTE MANIFEST

SHIPPING PAPER

1. EMERGENCY TELEPHONE NUMBER (Include Area Code): 1-800-424-9300

ORGANIZATION: Chemtrec

2. IS THIS AN "EXCLUSIVE USE" SHIPMENT? ☐ YES ☑ NO

3. TOTAL NUMBER OF PACKAGES IDENTIFIED ON THIS MANIFEST =====> 11

4. DOES EPA REGULATED WASTE REQUIRING A MANIFEST ACCOMPANY THIS SHIPMENT? ☐ YES ☑ NO
If "Yes," provide Manifest Number =====>

EPA MANIFEST NUMBER

5. SHIPPER -- NAME AND FACILITY
GTEOSI
140 Cantiague Rock RD
Hicksville, NY 11801

SHIPPER I.D. NUMBER: 0840-01-983
☐ COLLECTOR
☐ PROCESSOR
☑ GENERATOR TYPE (Specify) I

Utah Generator Site Access Permit No.: 020 500 1352
SHIPMENT NUMBER: NHRX-0989

CONTACT: Jean Agostinelli
TELEPHONE NUMBER (Include Area Code): 516-932-9157

6. CARRIER -- Name and Address
Priority Transport Services, Inc.
391 Anthony Street
Schenectady, NY 12308

EPA I.D. NUMBER: NYR000104976
SHIPPING DATE: 05/19/2005

CONTACT: Dispatch
TELEPHONE (Include Area Code): 800-235-0069

SIGNATURE -- Authorized carrier acknowledging waste receipt
DATE: 5-19-05

7. FORM 540 AND 540A — PAGE 1 OF 3 PAGE(S)
FORM 541 AND 541A — 6 PAGE(S)
FORM 542 AND 542A — None PAGE(S)
ADDITIONAL INFORMATION — None PAGE(S)

8. MANIFEST NUMBER (Use this number on all continuation pages): 0840-01-983

9. CONSIGNEE - Name and Facility
Envirocare of Utah, Inc.
Clive Disposal Site (Bulk Waste Facility)
Interstate 80, Exit 49
Clive, UT 84029

CONTACT: Shipping and Receiving
TELEPHONE (Include Area Code): (435)884-0155

SIGNATURE -- Authorized consignee acknowledging waste receipt
DATE

10. CERTIFICATION
This is to certify that the herein-named materials are properly classified, described, packaged, marked, and labeled and are in proper condition for transportation according to the applicable regulations of the Department of Transportation. This also certifies that the materials are classified, packaged, marked, and labeled and are in proper condition for transportation and disposal as described in accordance with the requirements of 10 CFR Parts 20 and 61, or equivalent state regulations.

AUTHORIZED SIGNATURE: [signature] TITLE: Broker DATE: 5-19-05

11. U.S. DEPARTMENT OF TRANSPORTATION DESCRIPTION (Including proper shipping name, hazard class, UN ID number, and any additional information)	12. DOT LABEL "RADIOACTIVE"	13. TRANSPORT INDEX	14. PHYSICAL AND CHEMICAL FORM	15. INDIVIDUAL RADIONUCLIDES	16. TOTAL PACKAGE ACTIVITY MBq	mCi	17. LSA/SCO CLASS	18. TOTAL WEIGHT OR VOLUME (Use appropriate units)	19. IDENTIFICATION NUMBER OF PACKAGE
Soil,DOT Non-Regulated, containing Radionuclides	NA	NA	Solid / OXIDES	Ac-227 Pa-231 Ra-223 Ra-226 Ra-228 Th-227 Th-228 Th-230 Th-232 U-234 U-Nat	3.8155E+01	1.0312E+00	NA	11010 LBS; 86.75 FT3	9153
Soil,DOT Non-Regulated, containing Radionuclides	NA	NA	Solid / OXIDES	Ac-227 Pa-231 Ra-223 Ra-226 Ra-228 Th-227 Th-228 Th-230 Th-232 U-234 U-Nat	1.4136E+01	3.8206E-01	NA	11780 LBS; 92.86 FT3	9158
Soil,DOT Non-Regulated, containing Radionuclides	NA	NA	Solid / OXIDES	Ac-227 Pa-231 Ra-223 Ra-226 Ra-228 Th-227 Th-228 Th-230 Th-232 U-234 U-Nat	1.4740E+01	3.9838E-01	NA	20250 LBS; 160.08 FT3	9177

FOR CONSIGNEE USE ONLY

____ Record Waste Description Inadequate
____ Contamination or Leakage Detected
____ Unexpected Exposure Rates Detected
____ Labels, Markings, etc. Inadequate
____ Container Integrity Inadequate
____ Other
____ No Violations Detected on this Shipment

20. TERMS AND CONDITIONS

A. HAZARDOUS MATERIALS: Generator represents & warrants that Waste Material __ is (or) ✓ is not a hazardous waste as defined in 40 CFR 261. Where the material is a hazardous waste, this shipment is also accompanied by a separate and completed hazardous waste manifest, along with the appropriate land-disposal restriction notice and/or certification as required by 40 CFR 268.1.

B. TITLE: Upon acceptance at the disposal site by Envirocare of Utah, Inc., and all appropriate regulatory authorities, title to the Waste Material which conforms to Generator's representations herein shall thereupon transfer from Generator and be vested in Envirocare of Utah, Inc.

C. WASTE MATERIAL: Generator represents and warrants that all data set forth in this (UNIFORM LOW-LEVEL RADIOACTIVE WASTE MANIFEST) are true and correct in all respects and in accordance with all applicable governmental laws, rules, regulations and Envirocare of Utah Inc.'s facility license.

D. INDEMNIFICATION: Generator agrees to indemnify Envirocare of Utah, Inc., its officers, employees and agents against all losses and liability whatsoever if such losses or liability results from the failure of the Waste Material to conform in all material respects to the data supplied on the (UNIFORM LOW-LEVEL RADIOACTIVE WASTE MANIFEST,) or if this shipment fails to meet the standards prescribed by the Department of Transportation or any governmental agency having jurisdiction over such matters.

FORM 540A

Envirocare of Utah, Inc.

UNIFORM LOW-LEVEL RADIOACTIVE WASTE MANIFEST

SHIPPING PAPER (CONTINUATION)

8. MANIFEST NUMBER
(Use this number on all continuation pages)
0840-01-983

11. U.S. DEPARTMENT OF TRANSPORTATION DESCRIPTION (Including proper shipping name, hazard class, UN ID number, and any additional information)	12. DOT LABEL "RADIOACTIVE"	13. TRANSPORT INDEX	14. PHYSICAL AND CHEMICAL FORM	15. INDIVIDUAL RADIONUCLIDES				16. TOTAL PACKAGE ACTIVITY MBq	mCi	17. LSA/SCO CLASS	18. TOTAL WEIGHT OR VOLUME (Use appropriate units)	19. IDENTIFICATION NUMBER OF PACKAGE
Soil,DOT Non-Regulated, containing Radionuclides	NA	NA	Solid / OXIDES	Ac-227	Pa-231	Ra-223	Ra-226	1.5667E+01	4.2343E-01	NA	19400 LBS; 153.33 FT3	9178
				Ra-228	Th-227	Th-228	Th-230					
				Th-232	U-234	U-Nat						
Soil,DOT Non-Regulated, containing Radionuclides	NA	NA	Solid / OXIDES	Ac-227	Pa-231	Ra-223	Ra-226	1.1264E+01	3.0443E-01	NA	20760 LBS; 164.13 FT3	9179
				Ra-228	Th-227	Th-228	Th-230					
				Th-232	U-234	U-Nat						
Soil,DOT Non-Regulated, containing Radionuclides	NA	NA	Solid / OXIDES	Ac-227	Pa-231	Ra-223	Ra-226	1.2871E+01	3.4787E-01	NA	18580 LBS; 146.83 FT3	9182
				Ra-228	Th-227	Th-228	Th-230					
				Th-232	U-234	U-Nat						
Soil,DOT Non-Regulated, containing Radionuclides	NA	NA	Solid / OXIDES	Ac-227	Pa-231	Ra-223	Ra-226	5.5120E+00	1.4897E-01	NA	18720 LBS; 147.94 FT3	9185
				Ra-228	Th-227	Th-228	Th-230					
				Th-232	U-234	U-Nat						
Soil,DOT Non-Regulated, containing Radionuclides	NA	NA	Solid / OXIDES	Ac-227	Pa-231	Ra-223	Ra-226	2.9108E+00	7.8669E-02	NA	17140 LBS; 135.4 FT3	9187
				Ra-228	Th-227	Th-228	Th-230					
				Th-232	U-234	U-Nat						
Soil,DOT Non-Regulated, containing Radionuclides	NA	NA	Solid / OXIDES	Ac-227	Pa-231	Ra-223	Ra-226	2.1576E+00	5.8313E-02	NA	19240 LBS; 152.06 FT3	9194
				Ra-228	Th-227	Th-228	Th-230					
				Th-232	U-234	U-Nat						
Soil,DOT Non-Regulated, containing Radionuclides	NA	NA	Solid / OXIDES	Ac-227	Pa-231	Ra-223	Ra-226	1.9208E+00	5.1913E-02	NA	16890 LBS; 133.41 FT3	9195
				Ra-228	Th-227	Th-228	Th-230					

FORM 540A

Envirocare of Utah, Inc.

UNIFORM LOW-LEVEL RADIOACTIVE WASTE MANIFEST

SHIPPING PAPER (CONTINUATION)

8. MANIFEST NUMBER
(Use this number on all continuation pages)
0840-01-983

11. U.S. DEPARTMENT OF TRANSPORTATION DESCRIPTION (Including proper shipping name, hazard class, UN ID number, and any additional information)	12. DOT LABEL "RADIOACTIVE"	13. TRANSPORT INDEX	14. PHYSICAL AND CHEMICAL FORM	15. INDIVIDUAL RADIONUCLIDES				16. TOTAL PACKAGE ACTIVITY MBq	mCi	17. LSA/SCO CLASS	18. TOTAL WEIGHT OR VOLUME (Use appropriate units)	19. IDENTIFICATION NUMBER OF PACKAGE
Soil,DOT Non-Regulated, containing Radionuclides	NA	NA	Solid / OXIDES	Th-232	U-234	U-Nat		1.9208E+00	5.1913E-02	NA	16890 LBS; 133.41 FT3	9195
Soil,DOT Non-Regulated, containing Radionuclides	NA	NA	Solid / OXIDES	Ac-227	Pa-231	Ra-223	Ra-226	3.0760E+00	8.3136E-02	NA	18990 LBS; 150.08 FT3	9197
				Ra-228	Th-227	Th-228	Th-230					
				Th-232	U-234	U-Nat						

FORM 541 Envirocare of Utah, Inc.

UNIFORM LOW-LEVEL RADIOACTIVE WASTE MANIFEST

CONTAINER AND WASTE DESCRIPTION

Additional Nuclear Regulatory Commission (NRC) Requirements for Control, Transfer and Disposal of Radioactive Waste

1. MANIFEST TOTALS

NUMBER OF PACKAGES/ DISPOSAL CONTAINERS	NET WASTE VOLUME	NET WASTE WEIGHT	SPECIAL NUCLEAR MATERIAL (grams) U-233	U-235	Pu	Total
11	m3 43.1230 / ft3 1522.8700	kg 87035.3096 / ton 95.9400	NP	NP	NP	NP

ACTIVITY	ALL NUCLIDES	TRITIUM	C-14	Tc-99	I-129	SOURCE (kg)	
MBq	1.2159E+02	NP	NP	NP	NP	(kg)	3.1937E+00
mCi	3.2863E+00	NP	NP	NP	NP	(tons)	3.5205E-03

2. MANIFEST NUMBER 0840-01-983

3. PAGE 1 OF 6 PAGE(S)

4. SHIPPER NAME GTEOSI

SHIPMENT ID NUMBER 0840-01-983

DISPOSAL CONTAINER DESCRIPTION							WASTE DESCRIPTION FOR EACH WASTE TYPE IN CONTAINER										
5. CONTAINER IDENTIFICATION NUMBER/ GENERATOR ID NUMBER(S)	6. CONTAINER DESCRIPTION (See Note 1 & Note 1A)	7. VOLUME (m3) / (ft3)	8. WASTE AND CONTAINER WEIGHT (kg) / (ton)	9. SURFACE RADIATION LEVEL (mSv/hr) / (mrem/hr)	10. SURFACE CONTAMINATION (MBq/100 cm2) / (dpm/100cm2) ALPHA	BETA-GAMMA	PHYSICAL DESCRIPTION 11. WASTE DESCRIPTOR (See Note 2 & Note 2A)	12. APPROXIMATE WASTE VOLUME(S) IN CONTAINER (m3) / (FT3)	13. SOLIDIFICATION OR STABILIZATION MEDIA (See Note 3)	14. CHEMICAL DESCRIPTION CHEMICAL FORM/ CHELATING AGENT	WEIGHT % CHELATING AGENT IF > 0.1%	15. RADIOLOGICAL DESCRIPTION INDIVIDUAL RADIONUCLIDES AND ACTIVITY (MBq) AND CONTAINER TOTAL; OR CONTAINER TOTAL ACTIVITY AND RADIONUCLIDE PERCENT: RADIONUCLIDES	pCi/gm	MBq	mCi	16. WASTE CLASSIFICATION AS-Class A Stable AU-Class A Unstable B-Class B C-Class C
9153/GTEOSI	19 Strong Tight Container Loaded in Gondola	2.4565	4994.0523	0.0001	<3.6740E-06	<3.6740E-05	22,59-CONCRETE,59 -MISC DEBRIS-HJ	2.4565	100	OXIDES/NONE	0.00	Ac-227	1.09700E-01	(2.0141E-02)	(5.4436E-04)	AU
		86.7500	5.5050	0.0100	<2.2000E+02	<2.2000E+03		86.7500				Pa-231	1.15900E+00	2.1279E-01	5.7512E-03	
												Ra-223	9.88200E-02	(1.8144E-02)	(4.9037E-04)	
												Ra-226	2.43137E-01	4.4641E-02	1.2065E-03	
												Ra-228	1.40156E+00	2.5733E-01	6.9549E-03	
												Th-227 [1.7560E-14 kg]	1.09700E-01	(2.0141E-02)	(5.4436E-04)	
												Th-228 [8.3017E-12 kg]	1.37184E+00	2.5187E-01	6.8074E-03	
												Th-230 [1.7325E-07 kg]	7.33170E-01	1.3461E-01	3.6382E-03	
												Th-232 [6.3226E-02 kg]	1.40156E+00	2.5733E-01	6.9549E-03	
												U-234 [6.2010E-05 kg]	7.74777E+01	1.4225E+01	3.8446E-01	
												U-Nat [8.6461E-01 kg]	1.23709E+02	2.2713E+01	6.1387E-01	
												Subtotal		3.8097E+01	1.0296E+00	
												Total		3.8097E+01	1.0296E+00	
												Source [9.2790E-01 kg]				
9158/GTEOSI	19 Strong Tight Container Loaded in Gondola	2.6295	5343.3185	0.0001	<3.6740E-06	<3.6740E-05	22,59-CONCRETE,59 -MISC DEBRIS-HJ	2.6295	100	OXIDES/NONE	0.00	Ac-227	1.04700E-01	2.0578E-02	5.5615E-04	AU
		92.8600	5.8900	0.0070	<2.2000E+02	<2.2000E+03		92.8600				Pa-231	3.61200E-01	(7.0988E-02)	(1.9186E-03)	
												Ra-223	7.65500E-02	(1.5045E-02)	(4.0662E-04)	
												Ra-226	2.44154E-01	4.7985E-02	1.2969E-03	
												Ra-228	4.95177E-01	9.7321E-02	2.6303E-03	
												Th-227 [1.7940E-14 kg]	1.04700E-01	2.0578E-02	5.5615E-04	
												Th-228 [5.2306E-12 kg]	8.07462E-01	1.5870E-01	4.2891E-03	
												Th-230 [6.5520E-08 kg]	2.59032E-01	5.0908E-02	1.3759E-03	
												Th-232 [2.3912E-02 kg]	4.95177E-01	9.7321E-02	2.6303E-03	

Note 1: Container Description Codes. For containers/ waste requiring disposal in approved structural over-packs the numerical code must be followed by "-OP."

1. Wooden Box or Crate
2. Metal Box
3. Plastic Drum or Pail
4. Metal Drum or Pail
5. Metal Tank or Liner
6. Concrete Tank or Liner
7. Polyethlene Tank or Liner
8. Fiberglass Tank or Liner
9. Demineralizer
10. Gas Cylinder
11. Bulk, Unpackaged Waste
12. Unpackaged Components
13. High Integrity Container
19. Other. Describe in Item 6, or additional page

Note 1A: Bulk Packaging Description Codes. (Choose one code as may be applicable.)

A Gondola
B Intermodal
C End-Dump
D Roll-off
E Seavan

NOTE 2: Waste Descriptor Codes. (Choose up to three which predominate by volume.)

20. Charcoal
21. Incinerator Ash
22. Soil
23. Gas
24. Oil
25. Aqueous Liquid
26. Filter Media
27. Mechanical Filter
28. EPA or State Hazardous
29. Demolition Rubble
30. Cation Ion-exchange Media
31. Anion Ion-exchange Media
32. Mixed Bed Ion-exchange Media
33. Contaminated Equipment
34. Organic Liquid (except oil)
35. Glassware or Labware
36. Sealed Source/Device
37. Paint or Plating
38. Evaporator Bottoms/Sludges/ Concentrates
39. Compactible Trash
40. Noncompactible Trash
41. Animal Carcass
42. Biological Material (except animal carcass)
43. Activated Material
59. Other. Describe in item 11, or additional page

NOTE 2A: Specific Waste Descriptions (Choose all applicable codes.)

G Dewatered
H Solid
I Combustible
J Non-combustible
K Air Filtration Filters
L Asbestos

Note3: Solidification and Stabilization Media Codes. (Choose up to three which predominate by volume.) For media meeting disposal site structural stability requirements, the numerical code must be followed by "-S." and the media vendor and brand name must also be identified in Item 13. Code 100=NONE REQUIRED.

Solidification

90. Cement
91. Concrete (encapsulation)
92. Bitumen
93. Vinyl Chloride
94. Vinyl Ester Styrene
99. Other. Describe in item 13, or additional page
100. None Required.

FORM 541A

UNIFORM LOW-LEVEL RADIOACTIVE WASTE MANIFEST

CONTAINER AND WASTE DESCRIPTION (CONTINUATION)

Envirocare of Utah, Inc.

2. MANIFEST NUMBER 0840-01-983

DISPOSAL CONTAINER DESCRIPTION							WASTE DESCRIPTION FOR EACH WASTE TYPE IN CONTAINER									
							PHYSICAL DESCRIPTION			14. CHEMICAL DESCRIPTION		15. RADIOLOGICAL DESCRIPTION				16. WASTE CLASSIFICATION AS-Class A Stable AU-Class A Unstable B-Class B C-Class C
5. CONTAINER IDENTIFICATION NUMBER/ GENERATOR ID NUMBER(S)	6. CONTAINER DESCRIPTION (See Note 1 & Note 1A)	7. VOLUME (m3) (fl3)	8. WASTE AND CONTAINER WEIGHT (kg) (ton)	9. SURFACE RADIATION LEVEL (mSv/hr) (mrem/hr)	10. SURFACE CONTAMINATION (MBq/100 cm2) (dpm/100cm2) ALPHA	BETA-GAMMA	11. WASTE DESCRIPTOR (See Note 2 & Note 2A)	12. APPROXIMATE WASTE VOLUME(S) IN CONTAINER (m3) (FT3)	13. SOLIDIFICATION OR STABILIZATION MEDIA (See Note 3)	CHEMICAL FORM/ CHELATING AGENT	WEIGHT % CHELATING AGENT IF > 0.1%	INDIVIDUAL RADIONUCLIDES AND ACTIVITY (MBq) AND CONTAINER TOTAL; OR CONTAINER TOTAL ACTIVITY AND RADIONUCLIDE PERCENT: RADIONUCLIDES	pCi/gm	MBq	mCi	
												U-234 [2.2808E-05 kg]	2.66221E+01	5.2322E+00	1.4141E-01	
												U-Nat [3.1689E-01 kg]	4.23564E+01	8.3246E+00	2.2499E-01	
												Subtotal		1.4050E+01	3.7973E-01	
												Total		1.4050E+01	3.7973E-01	
												Source [3.4082E-01 kg]				
9177/GTEOSI	19 Strong Tight Container Loaded in Gondola	4.5330	9185.2461	0.0001	<3.6740E-06	<3.6740E-05	22,59-CONCRETE,59 -MISC DEBRIS-HJ	4.5330	100	OXIDES/NONE	0.00	Ac-227	6.02300E-02	(2.0407E-02)	(5.5154E-04)	AU
												Pa-231	2.22700E-01	(7.5454E-02)	(2.0393E-03)	
												Ra-223	1.05000E-01	3.5576E-02	9.6150E-04	
		160.0800	10.1250	0.0070	<2.2000E+02	<2.2000E+03		160.0800				Ra-226	2.52067E-01	8.5403E-02	2.3082E-03	
												Ra-228	7.84681E-01	2.6586E-01	7.1855E-03	
												Th-227 [1.7792E-14 kg]	6.02300E-02	(2.0407E-02)	(5.5154E-04)	
												Th-228 [9.2390E-12 kg]	8.27328E-01	2.8031E-01	7.5760E-03	
												Th-230 [1.7899E-07 kg]	4.10474E-01	1.3908E-01	3.7588E-03	
												Th-232 [6.5322E-02 kg]	7.84681E-01	2.6586E-01	7.1855E-03	
												U-234 [2.2703E-05 kg]	1.53712E+01	5.2081E+00	1.4076E-01	
												U-Nat [3.1762E-01 kg]	2.46265E+01	8.3439E+00	2.2551E-01	
												Subtotal		1.4624E+01	3.9525E-01	
												Total		1.4624E+01	3.9525E-01	
												Source [3.8296E-01 kg]				
9178/GTEOSI	19 Strong Tight Container Loaded in Gondola	4.3418	8799.6926	0.0001	<3.6740E-06	<3.6740E-05	22,59-CONCRETE,59 -MISC DEBRIS-HJ	4.3418	100	OXIDES/NONE	0.00	Ac-227	1.73200E-01	5.6210E-02	1.5192E-03	AU
												Pa-231	3.66100E-01	(1.1881E-01)	(3.2112E-03)	
												Ra-223	9.56400E-02	3.1039E-02	8.3889E-04	
		153.3300	9.7000	0.0070	<2.2000E+02	<2.2000E+03		153.3300				Ra-226	4.01043E-01	1.3015E-01	3.5177E-03	
												Ra-228	1.07645E+00	3.4935E-01	9.4419E-03	
												Th-227 [4.9006E-14 kg]	1.73200E-01	5.6210E-02	1.5192E-03	
												Th-228 [1.3803E-11 kg]	1.29039E+00	4.1877E-01	1.1318E-02	
												Th-230 [2.3520E-07 kg]	5.63103E-01	1.8275E-01	4.9391E-03	
												Th-232 [8.5835E-02 kg]	1.07645E+00	3.4935E-01	9.4419E-03	
												U-234 [2.3304E-05 kg]	1.64723E+01	5.3458E+00	1.4448E-01	
												U-Nat [3.2845E-01 kg]	2.65869E+01	8.6284E+00	2.3320E-01	
												Subtotal		1.5548E+01	4.2022E-01	
												Total		1.5548E+01	4.2022E-01	

FORM 541A

UNIFORM LOW-LEVEL RADIOACTIVE WASTE MANIFEST

CONTAINER AND WASTE DESCRIPTION (CONTINUATION)

Envirocare of Utah, Inc.

2. MANIFEST NUMBER 0840-01-983

DISPOSAL CONTAINER DESCRIPTION							WASTE DESCRIPTION FOR EACH WASTE TYPE IN CONTAINER									
							PHYSICAL DESCRIPTION			14. CHEMICAL DESCRIPTION		15. RADIOLOGICAL DESCRIPTION				16. WASTE CLASSIFICATION AS-Class A Stable AU-Class A Unstable B-Class B C-Class C
5. CONTAINER IDENTIFICATION NUMBER/ GENERATOR ID NUMBER(S)	6. CONTAINER DESCRIPTION (See Note 1 & Note 1A)	7. VOLUME (m3)/(ft3)	8. WASTE AND CONTAINER WEIGHT (kg)/(ton)	9. SURFACE RADIATION LEVEL (mSv/hr)/(mrem/hr)	10. SURFACE CONTAMINATION (MBq/100 cm2)/(dpm/100cm2) ALPHA	BETA-GAMMA	11. WASTE DESCRIPTOR (See Note 2 & Note 2A)	12. APPROXIMATE WASTE VOLUME(S) IN CONTAINER (m3)/(FT3)	13. SOLIDIFICATION OR STABILIZATION MEDIA (See Note 3)	CHEMICAL FORM/ CHELATING AGENT	WEIGHT % CHELATING AGENT IF > 0.1%	INDIVIDUAL RADIONUCLIDES AND ACTIVITY (MBq) AND CONTAINER TOTAL; OR CONTAINER TOTAL ACTIVITY AND RADIONUCLIDE PERCENT: RADIONUCLIDES	pCi/gm	MBq	mCi	
												Source [4.1431E-01 kg]				
9179/GTEOSI	19 Strong Tight Container Loaded in Gondola	4.6476	9416.5782	0.0001	<3.6740E-06	<3.6740E-05	22,59-CONCRETE,59 -MISC DEBRIS-HJ	4.6476	100	OXIDES/NONE	0.00	Ac-227	4.14300E-02	(1.4392E-02)	(3.8898E-04)	AU
												Pa-231	2.16300E-01	(7.5140E-02)	(2.0308E-03)	
												Ra-223	5.70500E-02	(1.9818E-02)	(5.3563E-04)	
		164.1300	10.3800	0.0100	<2.2000E+02	<2.2000E+03		164.1300				Ra-226	1.90067E-01	6.6027E-02	1.7845E-03	
												Ra-228	6.68652E-01	2.3228E-01	6.2778E-03	
												Th-227 [1.2548E-14 kg]	4.14300E-02	(1.4392E-02)	(3.8898E-04)	
												Th-228 [7.8721E-12 kg]	6.87544E-01	2.3884E-01	6.4552E-03	
												Th-230 [1.5638E-07 kg]	3.49779E-01	1.2151E-01	3.2840E-03	
												Th-232 [5.7071E-02 kg]	6.68652E-01	2.3228E-01	6.2778E-03	
												U-234 [1.7078E-05 kg]	1.12776E+01	3.9176E+00	1.0588E-01	
												U-Nat [2.4102E-01 kg]	1.82268E+01	6.3318E+00	1.7113E-01	
												Subtotal		1.1140E+01	3.0109E-01	
												Total		1.1140E+01	3.0109E-01	
												Source [2.9811E-01 kg]				
9182/GTEOSI	19 Strong Tight Container Loaded in Gondola	4.1578	8427.7468	0.0001	<3.6740E-06	<3.6740E-05	22,59-CONCRETE,59 -MISC DEBRIS-HJ	4.1578	100	OXIDES/NONE	0.00	Ac-227	7.63800E-02	(2.3736E-02)	(6.4152E-04)	AU
												Pa-231	4.00700E-01	(1.2452E-01)	(3.3655E-03)	
												Ra-223	7.44000E-02	(2.3121E-02)	(6.2489E-04)	
		146.8300	9.2900	0.0070	<2.2000E+02	<2.2000E+03		146.8300				Ra-226	3.04412E-01	9.4602E-02	2.5568E-03	
												Ra-228	7.62128E-01	2.3684E-01	6.4011E-03	
												Th-227 [2.0694E-14 kg]	7.63800E-02	(2.3736E-02)	(6.4152E-04)	
												Th-228 [8.9421E-12 kg]	8.73020E-01	2.7130E-01	7.3325E-03	
												Th-230 [1.5945E-07 kg]	3.98676E-01	1.2389E-01	3.3485E-03	
												Th-232 [5.8192E-02 kg]	7.62128E-01	2.3684E-01	6.4011E-03	
												U-234 [1.9692E-05 kg]	1.45365E+01	4.5173E+00	1.2209E-01	
												U-Nat [2.7389E-01 kg]	2.31531E+01	7.1950E+00	1.9446E-01	
												Subtotal		1.2676E+01	3.4259E-01	
												Total		1.2676E+01	3.4259E-01	
												Source [3.3210E-01 kg]				

FORM 541A

UNIFORM LOW-LEVEL RADIOACTIVE WASTE MANIFEST

CONTAINER AND WASTE DESCRIPTION (CONTINUATION)

Envirocare of Utah, Inc.

2. MANIFEST NUMBER 0840-01-983

DISPOSAL CONTAINER DESCRIPTION							WASTE DESCRIPTION FOR EACH WASTE TYPE IN CONTAINER									
							PHYSICAL DESCRIPTION			14. CHEMICAL DESCRIPTION		15. RADIOLOGICAL DESCRIPTION				16. WASTE CLASSIFICATION AS-Class A Stable AU-Class A Unstable B-Class B C-Class C
5. CONTAINER IDENTIFICATION NUMBER/ GENERATOR ID NUMBER(S)	6. CONTAINER DESCRIPTION (See Note 1 & Note 1A)	7. VOLUME (m3) / (ft3)	8. WASTE AND CONTAINER WEIGHT (kg) / (ton)	9. SURFACE RADIATION LEVEL (mSv/hr) / (mrem/hr)	10. SURFACE CONTAMINATION (MBq/100 cm2) / (dpm/100cm2) ALPHA	BETA-GAMMA	11. WASTE DESCRIPTOR (See Note 2 & Note 2A)	12. APPROXIMATE WASTE VOLUME(S) IN CONTAINER (m3) / (FT3)	13. SOLIDIFICATION OR STABILIZATION MEDIA (See Note 3)	CHEMICAL FORM/ CHELATING AGENT	WEIGHT % CHELATING AGENT IF > 0.1%	INDIVIDUAL RADIONUCLIDES AND ACTIVITY (MBq) AND CONTAINER TOTAL; OR CONTAINER TOTAL ACTIVITY AND RADIONUCLIDE PERCENT: RADIONUCLIDES	pCi/gm	MBq	mCi	
9185/GTEOSI	19 Strong Tight Container Loaded in Gondola	4.1892	8491.2497	0.0001	<3.6740E-06	<3.6740E-05	22,59-CONCRETE,59 -MISC DEBRIS-HJ	4.1892	100	OXIDES/NONE	0.00	Ac-227	1.39200E-01	4.3586E-02	1.1780E-03	AU
		147.9400	9.3600	0.0070	<2.2000E+02	<2.2000E+03		147.9400				Pa-231	5.59900E-01	1.7531E-01	4.7382E-03	
												Ra-223	6.45400E-02	(2.0208E-02)	(5.4617E-04)	
												Ra-226	2.57875E-01	8.0745E-02	2.1823E-03	
												Ra-228	6.58865E-01	2.0630E-01	5.5757E-03	
												Th-227 [3.8000E-14 kg]	1.39200E-01	4.3586E-02	1.1780E-03	
												Th-228 [8.2642E-12 kg]	8.00780E-01	2.5074E-01	6.7767E-03	
												Th-230 [1.3889E-07 kg]	3.44659E-01	1.0792E-01	2.9167E-03	
												Th-232 [5.0688E-02 kg]	6.58865E-01	2.0630E-01	5.5757E-03	
												U-234 [7.2917E-06 kg]	5.34219E+00	1.6727E+00	4.5209E-02	
												U-Nat [1.0295E-01 kg]	8.63758E+00	2.7046E+00	7.3096E-02	
												Subtotal		5.4918E+00	1.4843E-01	
												Total		5.4918E+00	1.4843E-01	
												Source [1.5365E-01 kg]				
9187/GTEOSI	19 Strong Tight Container Loaded in Gondola	3.8341	7774.5737	0.0001	<3.6740E-06	<3.6740E-05	22,59-CONCRETE,59 -MISC DEBRIS-HJ	3.8341	100	OXIDES/NONE	0.00	Ac-227	6.42100E-02	1.8401E-02	4.9732E-04	AU
		135.4000	8.5700	0.0080	<2.2000E+02	<2.2000E+03		135.4000				Pa-231	5.42400E-01	1.5544E-01	4.2010E-03	
												Ra-223	1.48800E-01	4.2643E-02	1.1525E-03	
												Ra-226	3.35920E-01	9.6267E-02	2.6018E-03	
												Ra-228	7.84965E-01	2.2495E-01	6.0797E-03	
												Th-227 [1.6043E-14 kg]	6.42100E-02	1.8401E-02	4.9732E-04	
												Th-228 [8.2460E-12 kg]	8.73020E-01	2.5019E-01	6.7618E-03	
												Th-230 [1.5145E-07 kg]	4.10622E-01	1.1767E-01	3.1804E-03	
												Th-232 [5.5270E-02 kg]	7.84965E-01	2.2495E-01	6.0797E-03	
												U-234 [2.9142E-06 kg]	2.33277E+00	6.6852E-01	1.8068E-02	
												U-Nat [4.1620E-02 kg]	3.81525E+00	1.0934E+00	2.9550E-02	
												Subtotal		2.9108E+00	7.8670E-02	
												Total		2.9108E+00	7.8670E-02	
												Source [9.6893E-02 kg]				
9194/GTEOSI	19 Strong Tight Container Loaded in Gondola	4.3059	8727.1178	0.0001	<3.6740E-06	<3.6740E-05	22,59-CONCRETE,59 -MISC DEBRIS-HJ	4.3059	100	OXIDES/NONE	0.00	Ac-227	4.25900E-02	(1.3708E-02)	(3.7048E-04)	AU
		152.0600	9.6200	0.0070	<2.2000E+02	<2.2000E+03		152.0600				Pa-231	3.14600E-01	1.0125E-01	2.7366E-03	
												Ra-223	1.01400E-01	3.2635E-02	8.8204E-04	
												Ra-226	2.65643E-01	8.5496E-02	2.3107E-03	
												Ra-228	6.86383E-01	2.2091E-01	5.9706E-03	

FORM 541A

UNIFORM LOW-LEVEL RADIOACTIVE WASTE MANIFEST

CONTAINER AND WASTE DESCRIPTION (CONTINUATION)

Envirocare of Utah, Inc.

2. MANIFEST NUMBER 0840-01-983

DISPOSAL CONTAINER DESCRIPTION							WASTE DESCRIPTION FOR EACH WASTE TYPE IN CONTAINER									
5. CONTAINER IDENTIFICATION NUMBER/ GENERATOR ID NUMBER(S)	6. CONTAINER DESCRIPTION (See Note 1 & Note 1A)	7. VOLUME (m3)/(ft3)	8. WASTE AND CONTAINER WEIGHT (kg)/(ton)	9. SURFACE RADIATION LEVEL (mSv/hr)/(mrem/hr)	10. SURFACE CONTAMINATION (MBq/100 cm2)/(dpm/100cm2)		PHYSICAL DESCRIPTION			14. CHEMICAL DESCRIPTION		15. RADIOLOGICAL DESCRIPTION				16. WASTE CLASSIFICATION AS-Class A Stable AU-Class A Unstable B-Class B C-Class C
					ALPHA	BETA-GAMMA	11. WASTE DESCRIPTOR (See Note 2 & Note 2A)	12. APPROXIMATE WASTE VOLUME(S) IN CONTAINER (m3)/(FT3)	13. SOLIDIFICATION OR STABILIZATION MEDIA (See Note 3)	CHEMICAL FORM/ CHELATING AGENT	WEIGHT % CHELATING AGENT IF > 0.1%	INDIVIDUAL RADIONUCLIDES AND ACTIVITY (MBq) AND CONTAINER TOTAL; OR CONTAINER TOTAL ACTIVITY AND RADIONUCLIDE PERCENT				
												RADIONUCLIDES	pCi/gm	MBq	mCi	
												Th-227 [1.1951E-14 kg]	4.25900E-02	(1.3708E-02)	(3.7048E-04)	
												Th-228 [9.5657E-12 kg]	9.01736E-01	2.9022E-01	7.8439E-03	
												Th-230 [1.4873E-07 kg]	3.59054E-01	1.1556E-01	3.1233E-03	
												Th-232 [5.4278E-02 kg]	6.86383E-01	2.2091E-01	5.9706E-03	
												U-234 [1.6034E-06 kg]	1.14285E+00	3.6783E-01	9.9413E-03	
												U-Nat [2.6468E-02 kg]	2.16040E+00	6.9534E-01	1.8793E-02	
												Subtotal		2.1302E+00	5.7572E-02	
												Total		2.1302E+00	5.7572E-02	
												Source [8.0748E-02 kg]				
9195/GTEOSI	19 Strong Tight Container Loaded in Gondola	3.7778	7661.1756	0.0001	<3.6740E-06	<3.6740E-05	22,59-CONCRETE,59 -MISC DEBRIS-HJ	3.7778	100	OXIDES/NONE	0.00	Ac-227	9.55800E-02	2.6989E-02	7.2944E-04	AU
		133.4100	8.4450	0.0070	<2.2000E+02	<2.2000E+03		133.4100				Pa-231	3.67600E-01	1.0380E-01	2.8054E-03	
												Ra-223	4.95200E-02	(1.3983E-02)	(3.7792E-04)	
												Ra-226	2.07563E-01	5.8612E-02	1.5841E-03	
												Ra-228	4.46667E-01	1.2613E-01	3.4088E-03	
												Th-227 [2.3530E-14 kg]	9.55800E-02	2.6989E-02	7.2944E-04	
												Th-228 [5.4090E-12 kg]	5.81171E-01	1.6411E-01	4.4353E-03	
												Th-230 [8.4914E-08 kg]	2.33656E-01	6.5978E-02	1.7832E-03	
												Th-232 [3.0990E-02 kg]	4.46667E-01	1.2613E-01	3.4088E-03	
												U-234 [1.9467E-06 kg]	1.58152E+00	4.4659E-01	1.2070E-02	
												U-Nat [2.8987E-02 kg]	2.69672E+00	7.6150E-01	2.0581E-02	
												Subtotal		1.9068E+00	5.1535E-02	
												Total		1.9068E+00	5.1535E-02	
												Source [5.9978E-02 kg]				
9197/GTEOSI	19 Strong Tight Container Loaded in Gondola	4.2498	8613.7197	0.0001	<3.6740E-06	<3.6740E-05	22,59-CONCRETE,59 -MISC DEBRIS-HJ	4.2498	100	OXIDES/NONE	0.00	Ac-227	5.68500E-02	(1.8059E-02)	(4.8807E-04)	AU
		150.0800	9.4950	0.0070	<2.2000E+02	<2.2000E+03		150.0800				Pa-231	2.84300E-01	9.0310E-02	2.4408E-03	
												Ra-223	7.12500E-02	(2.2633E-02)	(6.1169E-04)	
												Ra-226	3.08768E-01	9.8080E-02	2.6508E-03	
												Ra-228	7.27943E-01	2.3123E-01	6.2495E-03	
												Th-227 [1.5744E-14 kg]	5.68500E-02	(1.8059E-02)	(4.8807E-04)	
												Th-228 [6.7597E-12 kg]	6.45645E-01	2.0509E-01	5.5430E-03	
												Th-230 [1.5568E-07 kg]	3.80794E-01	1.2096E-01	3.2692E-03	
												Th-232 [5.6814E-02 kg]	7.27943E-01	2.3123E-01	6.2495E-03	

FORM 541A

UNIFORM LOW-LEVEL RADIOACTIVE WASTE MANIFEST

CONTAINER AND WASTE DESCRIPTION (CONTINUATION)

Envirocare of Utah, Inc.

2. MANIFEST NUMBER 0840-01-983

DISPOSAL CONTAINER DESCRIPTION							WASTE DESCRIPTION FOR EACH WASTE TYPE IN CONTAINER									
							PHYSICAL DESCRIPTION			14. CHEMICAL DESCRIPTION		15. RADIOLOGICAL DESCRIPTION				16. WASTE CLASSIFICATION AS-Class A Stable AU-Class A Unstable B-Class B C-Class C
5. CONTAINER IDENTIFICATION NUMBER/ GENERATOR ID NUMBER(S)	6. CONTAINER DESCRIPTION (See Note 1 & Note 1A)	7. VOLUME (m3)/(ft3)	8. WASTE AND CONTAINER WEIGHT (kg)/(ton)	9. SURFACE RADIATION LEVEL (mSv/hr)/(mrem/hr)	10. SURFACE CONTAMINATION (MBq/100 cm2)/(dpm/100cm2)		11. WASTE DESCRIPTOR (See Note 2 & Note 2A)	12. APPROXIMATE WASTE VOLUME(S) IN CONTAINER (m3)/(FT3)	13. SOLIDIFICATION OR STABILIZATION MEDIA (See Note 3)	CHEMICAL FORM/ CHELATING AGENT	WEIGHT % CHELATING AGENT IF > 0.1%	INDIVIDUAL RADIONUCLIDES AND ACTIVITY (MBq) AND CONTAINER TOTAL; OR CONTAINER TOTAL ACTIVITY AND RADIONUCLIDE PERCENT				
					ALPHA	BETA-GAMMA						RADIONUCLIDES	pCi/gm	MBq	mCi	
												U-234 [3.2351E-06 kg]	2.33632E+00	7.4215E-01	2.0058E-02	
												U-Nat [4.9420E-02 kg]	4.08710E+00	1.2983E+00	3.5088E-02	
												Subtotal		3.0174E+00	8.1549E-02	
												Total		3.0174E+00	8.1549E-02	
												Source [1.0624E-01 kg]				
Shipment Totals		43.1230	87434.4710									Source [3.1937E+00 kg]		1.2159E+02	3.2863E+00	
		1522.8700	96.3800													

FORM 541A (04-03)

Envirocare of Utah, Inc.

ADDITIONAL NOTES

Manifest Number
0840-01-983
PAGE 1

New York State Waste Transporter Part 364 permit No. 4A-288
New York State Waste Transporter Part 381 permit Number 4A-288

UNIFORM LOW-LEVEL RADIOACTIVE WASTE MANIFEST
ISOTOPES REPORT

For Manifest # 0840-01-983
Envirocare of Utah, Inc.

	Total Activity		
Isotope	**(MBq)**	**(mCi)**	**(Ci)**
Ac-227	2.7621E-01	7.4650E-03	7.4650E-06
Pa-231	1.3038E+00	3.5239E-02	3.5239E-05
Ra-223	2.7484E-01	7.4282E-03	7.4282E-06
Ra-226	8.8801E-01	2.4000E-02	2.4000E-05
Ra-228	2.4485E+00	6.6176E-02	6.6176E-05
Th-227	2.7621E-01	7.4650E-03	7.4650E-06
Th-228	2.7801E+00	7.5139E-02	7.5139E-05
Th-230	1.2808E+00	3.4617E-02	3.4617E-05
Th-232	2.4485E+00	6.6176E-02	6.6176E-05
U-234	4.2344E+01	1.1444E+00	1.1444E-03
U-Nat	6.8090E+01	1.8403E+00	1.8403E-03

ENVIROCARE *OF UTAH, LLC.*

THE SAFE ALTERNATIVE

CERTIFICATE OF DISPOSAL

GTE Operations Support Inc., Irving

This Certificate acknowledges that the following manifested shipments:

Shipment	Disposal Location	Date	Shipment	Disposal Location	Date
0840-01-0977	Class A	06/10/05 11:58:51	0840-01-0981	Class A	06/10/05 11:34:19
0840-01-0982	Class A	06/10/05 11:58:51	0840-01-0983	Class A	06/10/05 11:34:19
0840-01-0984	Class A	06/10/05 10:04:57	0840-01-0985	Class A	06/10/05 10:04:57
0840-01-0986	Class A	06/10/05 11:34:19	0840-04-0029	Class A	06/10/05 11:58:51

Representing 9,190.86 cubic feet of waste has been disposed of at the above listed Disposal Facility. Disposal is subject to Envirocare's Radioactive Material License, all other applicable licenses, permits and regulations, and the Disposal Agreement.

Brent Anderson
Director of LLRW Operations

6/14/05
Date

605 N. 5600 W, Salt Lake City, Utah 84116 Telephone (801) 532-1330

BagNum	MANIFEST GROSS WEIGHT
9153	11010

Shipment Survey

Survey Number: GTEOSI-~~04~~ 05-00303 Date: 1-20-05 Time: 13:30

Waste Container Type: Super Sack 1-20-05 Intermodal Other: Soil

Waste Container ID #: 9153 Storage Bin: 50 Gross Weight: 11010 lbs

	Ludlum 3030		Ludlum 3030		Ludlum 3030		Ludlum 19
Serial #	190646		191265				180299
Probe #	N/A		N/A		N/A		N/A
Calibration Due Date:	~~12-13-05~~ ~~3-4-05~~ 1-20-05		4-20-05				~~22 Apr 05~~
	α	β	α	β	α	β	
Background	0 cpm	25 cpm	0 cpm	25 cpm	cpm	cpm	5 μR/hr
Efficiency	29 %	25 %	29 %	25 %	N/A %		
MDA	25 dpm	130 dpm	25 dpm	130 dpm	dpm	dpm	

Maximum Contact Dose Rate: 0.010 mrem/hr Transport Index: 0 mrem/hr

	α cpm	α dpm/100 cm2	β cpm	β dpm/100 cm2
ALARA Limit	N/A	60	N/A	500
Smear #				
1	0	<MDA	28	<MDA
2	0		32	
3	0		36	
4	1		34	
5	0		38	
6	0	<MDA	30	<MDA

Smear Locations: 1 - Bottom 2 - Front 3 - Right Side 4 - Back 5 - Left Side 6 - Top

George Economos — Surveyor Name

George Economos — Surveyor Signature

Supervisor Approval

23464-S-SHEET9153-99.9

Date: 01/04/05 Time:1447

1-20-05 14:35 Bag# 9153

11010 lb GR

012005 1435 9153 0011010

BagNum	MANIFEST GROSS WEIGHT
9158	11780

Shipment Survey

Survey Number: GTECSI-05-00304 Date: 1-20-05 Time: 13:20

Waste Container Type: Super Sack Intermodal Other: Soil

Waste Container ID #: 9158 Storage Bin: 50 Gross Weight: 11780 lbs

	Ludlum 3030		Ludlum 3030		Ludlum 3030		Ludlum 19
Serial #	190646		191265				180299
Probe #	N/A		N/A		N/A		N/A
Calibration Due Date:	12-13-05		4-20-05				22 Apr 05
	α	β	α	β	α	β	
Background	0 cpm	25 cpm	0 cpm	25 cpm	cpm	cpm	5 μR/hr
Efficiency	29 %	25 %	29 %	25 %	%	N/A %	
MDA	25 dpm	130 dpm	25 dpm	130 dpm	dpm	dpm	

Maximum Contact Dose Rate: 0.007 mrem/hr Transport Index: 0 mrem/hr

	α cpm	α dpm/100 cm2	β cpm	β dpm/100 cm2
ALARA Limit	N/A	60	N/A	500
Smear #				
1	0	<MDA	30	<MDA
2	0		34	
3	0		29	
4	0		38	
5	1		27	
6	1	<MDA	31	<MDA

Smear Locations: 1 - Bottom 2 - Front 3 - Right Side 4 - Back 5 - Left Side 6 - Top

George Economus — Surveyor Name

George Economus — Surveyor Signature

MC — Supervisor Approval

23465-S-SHEET9158-99.9

Date: 01/04/05 Time:1451

1-20-05 14:01 Bag# 9158

11780 lb GR

012005 1401 9158 0011780

BagNum	MANIFEST GROSS WEIGHT
9194	19240

Shipment Survey

Survey Number: GTEOSI-04-10513 Date: 12.13.04 Time: 1359

Waste Container Type: Super Sack Intermodal Other: soil

Waste Container ID #: 9194 Storage Bin: 49 Gross Weight: 19240 lbs

	Ludlum 3030		Ludlum 3030		Ludlum 3030		Ludlum 19
Serial #	190641		191265		N		193615
Probe #	N/A		N/A				N/A
Calibration Due Date:	3-4-05		4-20-05			A	5-19-05
	α	β	α	β	α	β	
Background	0 cpm	25 cpm	0 cpm	25 cpm	N cpm	cpm	6 μR/hr
Efficiency	29 %	25 %	29 %	25 %	%	%	
MDA	25 dpm	130 dpm	25 dpm	130 dpm	dpm	A dpm	

Maximum Contact Dose Rate: .007 mrem/hr Transport Index: 0 mrem/hr

	α cpm	α dpm/100 cm2	β cpm	β dpm/100 cm2
ALARA Limit	N/A	60	N/A	500
Smear #				
1	0	<MDA	33	<MDA
2	0		30	
3	0		22	
4	0		37	
5	0		38	
6	0		21	

Smear Locations: 1 - Bottom 2 - Front 3 - Right Side 4 - Back 5 - Left Side 6 - Top

DEBRA LePage — Debra LePage
Surveyor Name — Surveyor Signature

George Economy
Supervisor Approval

23112-S-DRP119194-05.0
Date: 12/14/04 Time:1710

1-05-05 10:45 Bag# 9194
19240 lb GR
010505 1045 9194 0019240

NYSDEC:V00089-1; URS27010-039

BagNum	MANIFEST GROSS WEIGHT
9197	18990

Shipment Survey

Survey Number: GTEDSI-04-10515 Date: 12.13.04 Time: 1407

Waste Container Type: Super Sack Intermodal Other: soil

Waste Container ID #: 9197 Storage Bin: 49 Gross Weight: 18990 lbs

	Ludlum 3030		Ludlum 3030		Ludlum 3030		Ludlum 19
Serial #	190641		191265		N		193615
Probe #	N/A		N/A				N/A
Calibration Due Date:	3-4-05		4-20-05			A	5-19-05
	α	β	α	β	α	β	
Background	0 cpm	25 cpm	0 cpm	25 cpm	N cpm	cpm	6 μR/hr
Efficiency	29 %	25 %	29 %	25 %	%	%	
MDA	25 dpm	130 dpm	25 dpm	130 dpm	dpm	A dpm	

Maximum Contact Dose Rate: .007 mrem/hr Transport Index: 0 mrem/hr

	α cpm	α dpm/100 cm2	β cpm	β dpm/100 cm2
ALARA Limit	N/A	60	N/A	500
Smear #				
1	0	<MDA	30	<MDA
2	0		35	
3	1		36	
4	1		30	
5	0		28	
6	0		21	

Smear Locations: 1 - Bottom 2 - Front 3 - Right Side 4 - Back 5 - Left Side 6 - Top

DEBRA LePage — Debra L Page

Surveyor Name — Surveyor Signature

George Economos

Supervisor Approval

23114-S-DRP119197-05.0

Date: 12/14/04 Time:1715

1-05-05 10:41 Bag# 9197

18990 lb GR

010505 1041 9197 0018990

NYSDEC:V00089-1; URS27010-039

BagNum	MANIFEST GROSS WEIGHT
9195	16890

Shipment Survey

Survey Number: GTEOSI-04-10514 Date: 12.13.04 Time: 1433

Waste Container Type: Super Sack Intermodal Other: Soil

Waste Container ID #: 9195 Storage Bin: 49 Gross Weight: 16890 lbs

	Ludlum 3030		Ludlum 3030		Ludlum 3030		Ludlum 19
Serial #	190641		191265		N		193615
Probe #	N/A		N/A				N/A
Calibration Due Date:	3-4-05		4-20-05			A	5-19-05
	α	β	α	β	α	β	
Background	0 cpm	25 cpm	0 cpm	25 cpm	N cpm	cpm	6 μR/hr
Efficiency	29 %	25 %	29 %	25 %	%	%	
MDA	25 dpm	130 dpm	25 dpm	130 dpm	dpm	A dpm	

Maximum Contact Dose Rate: .007 mrem/hr Transport Index: 0 mrem/hr

	α cpm	α dpm/100 cm2	β cpm	β dpm/100 cm2
ALARA Limit	N/A	60	N/A	500
Smear #				
1	0	<MDA	33	<MDA
2	0		38	
3	0		30	
4	0		35	
5	1		34	
6	0		37	

Smear Locations: 1 - Bottom 2 - Front 3 - Right Side 4 - Back 5 - Left Side 6 - Top

DEBRA LEPAGE — Debra LePage

Surveyor Name — Surveyor Signature

George Economos

Supervisor Approval

23113-S-DRP119195-05.0

Date: 12/14/04 Time:1713

1-05-05 9:38 Bag# 9195

16890 lb GR

010505 0938 9195 0016890

BagNum	MANIFEST GROSS WEIGHT
9185	18720

Shipment Survey

Survey Number: GTEOSI-04-10509 Date: 12-13-04 Time: 1057

Waste Container Type: Super Sack Intermodal Other: soil

Waste Container ID #: 9185 Storage Bin: 46 Gross Weight: 18720 lbs

	Ludlum 3030		Ludlum 3030		Ludlum 3030		Ludlum 19
Serial #	190641		191265		N		193615
Probe #	N/A		N/A				N/A
Calibration Due Date:	3-4-05		4-20-05			A	5-19-05
	α	β	α	β	α	β	
Background	0 cpm	25 cpm	0 cpm	25 cpm	N cpm	cpm	6 μR/hr
Efficiency	29 %	25 %	29 %	25 %	%	%	
MDA	25 dpm	130 dpm	25 dpm	130 dpm	dpm	A dpm	

Maximum Contact Dose Rate: .007 mrem/hr Transport Index: 0 mrem/hr

	α cpm	α dpm/100 cm2	β cpm	β dpm/100 cm2
ALARA Limit	N/A	60	N/A	500
Smear #				
1	0	<MDA	32	<MDA
2	0		37	
3	2		30	
4	1		26	
5	0		31	
6	0		36	

Smear Locations: 1 - Bottom 2 - Front 3 - Right Side 4 - Back 5 - Left Side 6 - Top

DEBRA LEPAGE — Debra LePage

Surveyor Name — Surveyor Signature

George Economos

Supervisor Approval

22975-S-DR0099185-05.0

Date: 12/13/04 Time:1611

1-05-05 8:33 Bag# 9185

18720 lb GR

010505 0833 9185 0018720

BagNum	MANIFEST GROSS WEIGHT
9179	20760

Shipment Survey

Survey Number: GTEDSI-04-10505 Date: 12-13-04 Time: 0948

Waste Container Type: Super Sack Intermodal Other: Soil

Waste Container ID #: 9179 Storage Bin: 46 Gross Weight: 20760 lbs

	Ludlum 3030		Ludlum 3030		Ludlum 3030		Ludlum 19
Serial #	190641		191265		N		193615
Probe #	N/A		N/A				N/A
Calibration Due Date:	3-4-05		4-20-05			A	5-19-05
	α	β	α	β	α	β	
Background	0 cpm	25 cpm	0 cpm	25 cpm	N cpm	cpm	6 μR/hr
Efficiency	29 %	25 %	29 %	25 %	%	%	
MDA	25 dpm	130 dpm	25 dpm	130 dpm	dpm	A dpm	

Maximum Contact Dose Rate: .010 mrem/hr Transport Index: 0 mrem/hr

	α cpm	α dpm/100 cm2	β cpm	β dpm/100 cm2
ALARA Limit	N/A	60	N/A	500
Smear #				
1	1	<MDA	27	<MDA
2	0		24	
3	0		36	
4	0		25	
5	2		31	
6	0		29	

Smear Locations: 1 - Bottom 2 - Front 3 - Right Side 4 - Back 5 - Left Side 6 - Top

DEBRA LePage — Debra LePage

Surveyor Name — Surveyor Signature

George Economos

Supervisor Approval

22944-S-DR0099179-05.0

Date: 12/13/04 Time:1407

1-05-05 8:38 Bag# 9179

20760 lb GR

010505 0838 9179 0020760

BagNum	MANIFEST GROSS WEIGHT
9187	17.140

Shipment Survey

Survey Number: GTEOSI-04-10511 Date: 12-13-04 Time: 1144

Waste Container Type: (Super Sack) Intermodal Other: Soil

Waste Container ID #: 9187 Storage Bin: 47 Gross Weight: 17140 lbs

	Ludlum 3030		Ludlum 3030		Ludlum 3030		Ludlum 19
Serial #	190641		191265		N		193615
Probe #	N/A		N/A				N/A
Calibration Due Date:	3-4-05		4-20-05			A	5-19-05
	α	β	α	β	α	β	
Background	0 cpm	25 cpm	0 cpm	25 cpm	N cpm	cpm	6 μR/hr
Efficiency	29 %	25 %	29 %	25 %	%	%	
MDA	25 dpm	130 dpm	25 dpm	130 dpm	dpm	A dpm	

Maximum Contact Dose Rate: .008 mrem/hr Transport Index: 0 mrem/hr

	α cpm	α dpm/100 cm2	β cpm	β dpm/100 cm2
ALARA Limit	N/A	60	N/A	500
Smear #				
1	0	<MDA	30	<MDA
2	1		28	
3	0		33	
4	0		30	
5	0		30	
6	0		37	

Smear Locations: 1 - Bottom 2 - Front 3 - Right Side 4 - Back 5 - Left Side 6 - Top

DEBRA LePage — Debra L Page

Surveyor Name — Surveyor Signature

George Economos

Supervisor Approval

23111-S-DRP099187-05.0

Date: 12/14/04 Time:1709

1-05-05 8:56 Bag# 9187

17140 lb GR

010505 0856 9187 0017140

NYSDEC:V00089-1; URS27010-039

BagNum	MANIFEST GROSS WEIGHT
9178	19400

Shipment Survey

Survey Number: GTEOSI-04- 10504 Date: 12-13-04 Time: 0934

Waste Container Type: Super Sack Intermodal Other: Soil

Waste Container ID #: 9178 Storage Bin: 46 Gross Weight: ~~19900~~ (m) 12/13/04 lbs
19400 (m) 1/5/05

	Ludlum 3030		Ludlum 3030		Ludlum 3030		Ludlum 19
Serial #	190641		191265		N		193615
Probe #	N/A		N/A				N/A
Calibration Due Date:	3-4-05		4-20-05			A	6
	α	β	α	β	α	β	
Background	0 cpm	25 cpm	0 cpm	25 cpm	N cpm	cpm	5-19-05 uR/hr
Efficiency	29 %	25 %	29 %	25 %	%	%	
MDA	25 dpm	130 dpm	25 dpm	130 dpm	dpm	A dpm	

Maximum Contact Dose Rate: .007 mrem/hr Transport Index: 0 mrem/hr

	α cpm	α dpm/100 cm2	β cpm	β dpm/100 cm2
ALARA Limit	N/A	60	N/A	500
Smear #				
1	0	<MDA	19	<MDA
2	0		25	
3	0		32	
4	0		37	
5	0		30	
6	0		34	

Smear Locations: 1 - Bottom 2 - Front 3 - Right Side 4 - Back 5 - Left Side 6 - Top

DEBRA LePage
Surveyor Name

Debra LePage
Surveyor Signature

George Cummins
Supervisor Approval

22943-S-DR0099178-05.0
Date: 12/13/04 Time:1402

1-05-05 8:46 Bag# 9178
19400 lb GR
010505 0846 9178 0019400

NYSDEC:V00089-1; URS27010-039

BagNum	MANIFEST GROSS WEIGHT
9177	20250

Shipment Survey

Survey Number: GTEOSI-04-10503 Date: 12-13-04 Time: 0832

Waste Container Type: Super Sack Intermodal Other: SOIL

Waste Container ID #: 9177 Storage Bin: 46 Gross Weight: 20250 lbs

	Ludlum 3030		Ludlum 3030		Ludlum 3030		Ludlum 19
Serial #	190641		191265		N		193615
Probe #	N/A		N/A				N/A
Calibration Due Date:	3-4-05		4-20-05			A	5-19-05
	α	β	α	β	α	β	
Background	0 cpm	25 cpm	0 cpm	25 cpm	N cpm	cpm	6 μR/hr
Efficiency	29 %	25 %	29 %	25 %	%	%	
MDA	25 dpm	130 dpm	25 dpm	130 dpm	dpm	A dpm	

Maximum Contact Dose Rate: .007 mrem/hr Transport Index: 0 mrem/hr

	α cpm	α dpm/100 cm2	β cpm	β dpm/100 cm2
ALARA Limit	N/A	60	N/A	500
Smear #				
1	0	<MDA	28	<MDA
2	0		32	
3	0		32	
4	0		35	
5	1		27	
6	0		27	

Smear Locations: 1 - Bottom 2 - Front 3 - Right Side 4 - Back 5 - Left Side 6 - Top

DEBRA LePage
Surveyor Name

Debra LePage
Surveyor Signature

George Simonds
Supervisor Approval

22942-S-DR0039177-05.0
Date: 12/13/04 Time:1359

1-05-05 8:51 Bag# 9177
20250 lb GR
010505 0851 9177 0020250

NYSDEC:V00089-1; URS27010-039

BagNum	MANIFEST GROSS WEIGHT
9182	18680

Shipment Survey

Survey Number: GTEOSI-04-10506 Date: 12-13-04 Time: 0940

Waste Container Type: Super Sack Intermodal Other: soil

Waste Container ID #: 9182 Storage Bin: 46 Gross Weight: 18580 lbs

	Ludlum 3030		Ludlum 3030		Ludlum 3030		Ludlum 19
Serial #	190641		191265		N		193615
Probe #	N/A		N/A				N/A
Calibration Due Date:	3-4-05		4-20-05			A	5-19-05
	α	β	α	β	α	β	
Background	0 cpm	25 cpm	0 cpm	25 cpm	N cpm	cpm	6 μR/hr
Efficiency	29 %	25 %	29 %	25 %	%	%	
MDA	25 dpm	130 dpm	25 dpm	130 dpm	dpm	A dpm	

Maximum Contact Dose Rate: .007 mrem/hr Transport Index: 0 mrem/hr

	α cpm	α dpm/100 cm2	β cpm	β dpm/100 cm2
ALARA Limit	N/A	60	N/A	500
Smear #				
1	0	<MDA	34	<MDA
2	0		24	
3	0		29	
4	0		24	
5	0		31	
6	0		27	

Smear Locations: 1 - Bottom 2 - Front 3 - Right Side 4 - Back 5 - Left Side 6 - Top

DEBRA LePage — Debra LePage
Surveyor Name — Surveyor Signature

George Economos
Supervisor Approval

22970-S-DR0099182-05.0
Date: 12/13/04 Time:1554

1-05-05 8:42 Bag# 9182
18580 lb GR
010505 0842 9182 0018580

Attachment 5.10
TRANSPORT VEHICLE RELEASE CHECKLIST

Shipment Number- 0840-01-983

Truck Number- 38-44

Trailer Number- 225 & 226

A qualified MHF-LS shipping technician shall verify that each item listed is satisfactory and then place a Check Mark in the corresponding box.

1. Driver possesses a valid driver's license with a HAZMAT endorsement ☑
2. Driver possesses a valid copy of a "Research and Special Programs Administration" U.S. DOT Hazmat Registration Certificate ☑
3. If manifested on a Hazardous Waste Manifest, ensure the carrier possesses a current EPA ID # ☑
4. Lamps are operable ☑
   - Headlights and Brights
   - Warning Lights and Flashers
   - Brake Lights
5. Coupling devices are intact ☑
6. Tires are sufficient ☑
   - No fabric is exposed through tread or sidewall
   - Front wheel tires must have tread pattern to a depth of ≥1/8 inch
   - Other tires must have tread pattern to a depth of ≥1/16 inch
   - Re-treaded tires are not authorized
7. Horn is operable ☑
8. Windshield wipers are operable ☑
9. Rear-vision mirrors are adequate (1 on each side) ☑
10. Emergency equipment is on-hand and accessible ☑
    - Fire extinguisher
    - Warning devices- bi-directional emergency reflectors, triangles (3), or liquid burning flares
11. General vehicle integrity is satisfactory ☑
    - Frame appears undamaged
    - Flooring is sufficient to support load
    - If a closed transport vehicle, vehicle is closed
    - Vehicle is otherwise in unimpaired physical condition
12. Vehicle truck and trailer have current DOT inspection stickers on both components (Good for 1 year from date performed) ☑
13. Vehicle is properly placarded (Exclusive Use LSA, Yellow III and HRCQ only) ☑
14. Shoring, strapping, blocking and bracing is adequate to prevent shifting of lading ☑

MHF-LS Qualified Technician Signature [signature]
Shipment Date 5-19-05

Attachment 5.9
LOADING DIAGRAM

A qualified MHF-LS shipper shall complete the following diagram by writing the package number and corresponding weight at the approximate position in which it is placed. The space to the left of the diagram may be used for additional or explanatory information as necessary.

Shipment Number- 0840-01-983

Front

9194
19240-lbs

9197
18990-lbs

Rear

MHF-LS Qualified Technician
Signature _____
Shipment Date 5/9/05

Attachment 5.9
LOADING DIAGRAM

A qualified MHF-LS shipper shall complete the following diagram by writing the package number and corresponding weight at the approximate position in which it is placed. The space to the left of the diagram may be used for additional or explanatory information as necessary.

Shipment Number- 0840.01-983

Front

9195
16890-lbs

9185
18720-lbs

Rear

MHF-LS Qualified Technician
Signature _____
Shipment Date 5-19-05

Attachment 5.9
LOADING DIAGRAM

A qualified MHF-LS shipper shall complete the following diagram by writing the package number and corresponding weight at the approximate position in which it is placed. The space to the left of the diagram may be used for additional or explanatory information as necessary.

Shipment Number- 0840.01-983

Front

9179
20760-lbs

9187
17140-lbs

Rear

MHF-LS Qualified Technician
Signature _____
Shipment Date 5-19-95

Attachment 5.9
LOADING DIAGRAM

A qualified MHF-LS shipper shall complete the following diagram by writing the package number and corresponding weight at the approximate position in which it is placed. The space to the left of the diagram may be used for additional or explanatory information as necessary.

Shipment Number- 0840.01.983

Front

9178
19400-lbs

9177
20250-lbs

Rear

MHF-LS Qualified Technician
Signature _____
Shipment Date 5-18-05

Attachment 5.9
LOADING DIAGRAM

A qualified MHF-LS shipper shall complete the following diagram by writing the package number and corresponding weight at the approximate position in which it is placed. The space to the left of the diagram may be used for additional or explanatory information as necessary.

Shipment Number- 0840.01-983

Front

9158-lbs
11780-lbs

9182
18580-lbs

Rear

MHF-LS Qualified Technician
Signature _____
Shipment Date 5-19-05

Attachment 5.9
LOADING DIAGRAM

A qualified MHF-LS shipper shall complete the following diagram by writing the package number and corresponding weight at the approximate position in which it is placed. The space to the left of the diagram may be used for additional or explanatory information as necessary.

Shipment Number- 0840-01-983

Front

9153
11010.165

Rear

MHF-LS Qualified Technician
Signature _____
Shipment Date 5-19-05

Attachment 5.15
RAILCAR INSPECTION FORM

Shipment Number	Carrier	Railcar Number
0840-01-983	NYARR / MHF	NHRX-0989

Item	SAT	UNSAT	Criteria	Comments
Coupler	☒	☐	Hardware intact, no cracks or broken welds, latching mechanism works properly, no loose or damaged parts	
Suspension	☒	☐	Hardware intact, no visible cracks or broken welds, coil springs seated and intact, inner and outer bearings intact and seated properly	
Wheel & Axle Assembly	☒	☐	Overall condition, no cracks or damaged areas on wheel surfaces, hubs centered, bolting intact, rims not bent or cracked	
Frame & Undercarriage	☒	☐	Main beams straight and centered, no major bends or damage, welds intact, no cracks	
Floors & Walls (Gondola, Boxcar)	☒	☐	No damage with open holes, punch throughs, ect. No rust damage, seams and welds intact, no rotting or other material problems, structurally sound	
Attachment Points or Tie Downs	☒	☐	Tie down hardware straight and intact, no cracks on or around attachment hardware, mechanical clips or latches operable and complete	
Doors (Boxcar Only)	☒	☐	Can be closed and secured properly, lubricated properly, rollers and tracks in operable condition, no loose or missing hardware, sealing surfaces intact and seals in serviceable condition	
Seals and Gasket	☒	☐	Seal Flanges intact with no dents or bends that affect sealing capability, gaskets pliable and in serviceable condition, no torn or missing areas, gasket appropriate to meet sealing requirements	
Seams (Gondola, Boxcar)	☒	☐	Seams intact, welds visibly sufficient, all corners and mating interfaces caulked and sealed properly	
Drains	☒	☐	Drains plugged or sealed properly, verify threaded plugs are tack welded or otherwise disabled, all other holes closed and sealed	
Brakes	☒	☐	Visibly inspect brake shoes, minimum 1" contact surface on all shoes, hoses and piping (tubing) mechanically sound, no missing or loose hardware, valves operate freely, no kinks or obstructions in piping or hoses	
Paint and Lettering	☒	☐	Overall good condition of exterior surfaces, identification numbering legible and intact, areas for placards or labels intact and structurally sound (Wood or metal panels)	
Bracing	☒	☐	Bracing and shoring must be sufficient to prevent shifting of lading during conditions normally incident to transportation	

MHF-LS Qualified Technician Signature _____

Shipment Date 5-19-05

Straight Bill of Lading

Shipper	MHF-LS For GTE Operations Support Incorporated 140 Contiague Rock Road Hicksville, NY 11369	Date: 5/19/2005
Consigned to	MHF-LS @ New York-Atlantic Rail Spur Hicksville, NY 11369	Load in Gondola # NHRX
Emergency Contact:	CHEMTREC 800-424-9300	989

TR: TL:

Quantity	Description		Net Waste Weight
1	Soil, DOT Non-Regulated Waste, Containing		
	Radioactive Materials.		
	Package ID Number		**Pounds:**
	Liner	9153	11010
	Liner		
			Total:
			11010
	Packages do not meet the DOT "radioactive material"		
	definition in 49 CFR 173.403.		
	Radionuclide: Ac-227,Th-227, Th232, Th230,Pa-231,Ra-223		
	Ra-226,Ra-228,Th-228,U-234,U-nat,		
	Total Activity: 38.155 MBq		
	Physical Form: Solid		
	Chemical Form: Metal Oxide		

GENERATOR CERTIFICATION: I hereby certify and declare that the contents of this consignment are fully and accurately described above by proper shipping name and are classified, packed, marked, and labeled, and are in all respects in proper condition for transport by highway according to applicable international and national government regulations.

Printed/Typed Name	Signature		Date
Robert Miller for MHFLS at GTEOSI			5/19/2005
Transporter	Signature		Date
Priority Transport			5/19/2005

Straight Bill of Lading

Shipper MHF-LS For GTE Operations Support Incorporated
140 Contiague Rock Road
Hicksville, NY 11369

Date: 5/19/2005

Consigned to MHF-LS @ New York-Atlantic Rail Spur
Hicksville, NY 11369

Load in Gondola # NHRX 989

Emergency Contact: CHEMTREC 800-424-9300

TR: TL:

Quantity	Description		Net Waste Weight
2	Soil, DOT Non-Regulated Waste, Containing		
	Radioactive Materials.		
	Package ID Number		**Pounds:**
	Liner	9158	11780
	Liner	9182	18580
			Total:
			30360
	Packages do not meet the DOT "radioactive material"		
	definition in 49 CFR 173.403.		
	Radionuclide: Ac-227,Th-227, Th232, Th230,Pa-231,Ra-223		
	Ra-226,Ra-228,Th-228,U-234,U-nat,		
	Total Activity: 27.007 MBq		
	Physical Form: Solid		
	Chemical Form: Metal Oxide		

GENERATOR CERTIFICATION: I hereby certify and declare that the contents of this consignment are fully and accurately described above by proper shipping name and are classified, packed, marked, and labeled, and are in all respects in proper condition for transport by highway according to applicable international and national government regulations.

Printed/Typed Name	Signature		Date
Robert Miller for MHFLS at GTEOSI			5/19/2005
Transporter	Signature		Date
Priority Transport			5/19/2005

Straight Bill of Lading

Shipper	MHF-LS For GTE Operations Support Incorporated 140 Contiague Rock Road Hicksville, NY 11369	Date: 5/19/2005
Consigned to	MHF-LS @ New York-Atlantic Rail Spur Hicksville, NY 11369	Load in Gondola # NHRX
Emergency Contact:	CHEMTREC 800-424-9300	989

TR: TL:

Quantity	Description		Net Waste Weight
2	Soil, DOT Non-Regulated Waste, Containing		
	Radioactive Materials.		
	Package ID Number		**Pounds:**
	Liner	9195	16890
	Liner	9185	18720
			Total:
			35610
	Packages do not meet the DOT "radioactive material"		
	definition in 49 CFR 173.403.		
	Radionuclide: Ac-227,Th-227, Th232, Th230,Pa-231,Ra-223		
	Ra-226,Ra-228,Th-228,U-234,U-nat,		
	Total Activity: 7.4238 MBq		
	Physical Form: Solid		
	Chemical Form: Metal Oxide		

7.4328

GENERATOR CERTIFICATION: I hereby certify and declare that the contents of this consignment are fully and accurately described above by proper shipping name and are classified, packed, marked, and labeled, and are in all respects in proper condition for transport by highway according to applicable international and national government regulations.

Printed/Typed Name	Signature		Date
Robert Miller for MHFLS at GTEOSI			5/19/2005
Transporter	Signature		Date
Priority Transport			5/19/2005

Straight Bill of Lading

Shipper MHF-LS For GTE Operations Support Incorporated
140 Contiague Rock Road
Hicksville, NY 11369

Date: 5/19/2005

Consigned to MHF-LS @ New York-Atlantic Rail Spur
Hicksville, NY 11369

Load in Gondola # NHRX 989

Emergency Contact: CHEMTREC 800-424-9300

TR:

Quantity	Description		Net Waste Weight
2	Soil, DOT Non-Regulated Waste, Containing		
	Radioactive Materials.		
	Package ID Number		**Pounds:**
	Liner	9179	20760
	Liner	9187	17140
			Total:
			37900
	Packages do not meet the DOT "radioactive material"		
	definition in 49 CFR 173.403.		
	Radionuclide: Ac-227,Th-227, Th232, Th230,Pa-231,Ra-223		
	Ra-226,Ra-228,Th-228,U-234,U-nat,		
	Total Activity: 14.1748 MBq		
	Physical Form: Solid		
	Chemical Form: Metal Oxide		

GENERATOR CERTIFICATION: I hereby certify and declare that the contents of this consignment are fully and accurately described above by proper shipping name and are classified, packed, marked, and labeled, and are in all respects in proper condition for transport by highway according to applicable international and national government regulations.

Printed/Typed Name	Signature		Date
Robert Miller for MHFLS at GTEOSI			5/19/2005
Transporter	Signature		Date
Priority Transport			5/19/2005

Straight Bill of Lading

Shipper MHF-LS For GTE Operations Support Incorporated
140 Contiague Rock Road
Hicksville, NY 11369

Date: 5/19/2005

Consigned to MHF-LS @ New York-Atlantic Rail Spur
Hicksville, NY 11369

Load in Gondola # NHRX 989

Emergency Contact: CHEMTREC 800-424-9300

TR: TL:

Total All Trucks 192760

Quantity	Description		Net Waste Weight
2	Soil, DOT Non-Regulated Waste, Containing		
	Radioactive Materials.		
	Package ID Number		**Pounds:**
	Liner	9194	19240
	Liner	9197	18990
			Total:
			38230
	Packages do not meet the DOT "radioactive material"		
	definition in 49 CFR 173.403.		
			5.2336
	Radionuclide: Ac-227,Th-227, Th232, Th230,Pa-231,Ra-223		
	Ra-226,Ra-228,Th-228,U-234,U-nat,		
	Total Activity: 5.2336 MBq		
	Physical Form: Solid		
	Chemical Form: Metal Oxide		

GENERATOR CERTIFICATION: I hereby certify and declare that the contents of this consignment are fully and accurately described above by proper shipping name and are classified, packed, marked, and labeled, and are in all respects in proper condition for transport by highway according to applicable international and national government regulations.

Printed/Typed Name	Signature		Date
Robert Miller for MHFLS at GTEOSI			5/19/2005
Transporter	Signature		Date
Priority Transport			5/19/2005

Straight Bill of Lading

Shipper MHF-LS For GTE Operations Support Incorporated
140 Contiague Rock Road
Hicksville, NY 11369

Date: 5/19/2005

Consigned to MHF-LS @ New York-Atlantic Rail Spur
Hicksville, NY 11369

Load in Gondola # NHRX 989

Emergency Contact: CHEMTREC 800-424-9300

TR: TL:

Quantity	Description		Net Waste Weight
2	Soil, DOT Non-Regulated Waste, Containing		
	Radioactive Materials.		
	Package ID Number		**Pounds:**
	Liner	9178	19400
	Liner	9177	20250
			Total:
			39650
	Packages do not meet the DOT "radioactive material"		
	definition in 49 CFR 173.403.		
	Radionuclide: Ac-227,Th-227, Th232, Th230,Pa-231,Ra-223		
	Ra-226,Ra-228,Th-228,U-234,U-nat,		
	Total Activity: 30.407 MBq		30.407
	Physical Form: Solid		
	Chemical Form: Metal Oxide		

GENERATOR CERTIFICATION: I hereby certify and declare that the contents of this consignment are fully and accurately described above by proper shipping name and are classified, packed, marked, and labeled, and are in all respects in proper condition for transport by highway according to applicable international and national government regulations.

Printed/Typed Name	Signature		Date
Robert Miller for MHFLS at GTEOSI			5/19/2005
Transporter	Signature		Date
Priority Transport			5/19/2005

NHRX	Shipment #		0											
	new	Bag #		9194	9197	9195	9185	9179	9187	9178	9177	9158	9182	9153
	Storage Loc.			19240	18990	16890	18720	20760	17140	19400	20250	11780	18580	11010
989	0840-01-983		200000	[redacted]										

[redacted]

container #
9194

shipping check sheet (For Form 540)

	Ac-227	[redacted]	corrected	activity mBq	activity mCi	activity Ci	SNM	source	
		4.259E-002	4.259E-002	1.3708E-02	3.7048E-04	3.7048E-07	grams	kg	
grams		[redacted]	pCi/g				5.1455E-09	5.1455E-12	
8698640		7.2000E+01							
	Pa-231	[redacted]		activity mBq	activity mCi	activity Ci	SNM	source	
19160		3.146E-001	3.146E-001	1.0125E-01	2.7366E-03	2.7366E-06	grams	kg	
grams		[redacted]					5.8225E-05	5.8225E-08	
8698640		4.7000E-02							
	Ra-223	[redacted]		activity mBq	activity mCi	activity Ci	SNM	source	
19160		1.014E-001	1.014E-001	3.2636E-02	8.8204E-04	8.8204E-07	grams	kg	
grams		[redacted]					1.7295E-11	1.7295E-14	
8698640		5.1000E+04							
	Ra-226	[redacted]		activity mBq	activity mCi	activity Ci	SNM	source	
19160		3.659E-001	2.6564E-01	8.5497E-02	2.3107E-03	2.3107E-06	grams	kg	1.37741
grams		[redacted]					2.3107E-06	2.3107E-09	
8698640		1.0000E+00							
	Ra228	[redacted]		activity mBq	activity mCi	activity Ci	SNM	source	
19160		4.839E-001	6.8638E-01	2.2091E-01	5.9706E-03	5.9706E-06	grams	kg	0.705
grams		[redacted]					2.2113E-08	2.2113E-11	
8698640		2.7000E+02							
	TH-227	[redacted]		activity mBq	activity mCi	activity Ci	SNM	source	
19160		4.259E-002	4.259E-002	1.3708E-02	3.7048E-04	3.7048E-07	grams	kg	
grams		[redacted]					1.1951E-11	1.1951E-14	
8698640		3.1000E+04							
	Th-228	[redacted]		activity mBq	activity mCi	activity Ci	SNM	source	
19160		4.993E-001	9.0174E-01	2.9022E-01	7.8439E-03	7.8439E-06	grams	kg	
grams		[redacted]					9.5657E-09	9.5657E-12	0.55371
8698640		8.2000E+02							
	Th-230	[redacted]		activity mBq	activity mCi	activity Ci	SNM	source	
19160		4.839E-001	3.5905E-01	1.1556E-01	3.1233E-03	3.1233E-06	grams	kg	
grams		[redacted]					1.4873E-04	1.4873E-07	1.34771
8698640		2.1000E-02							
	TH-232	[redacted]		activity mBq	activity mCi	activity Ci	SNM	source	
19160		4.839E-001	6.8638E-01	2.2091E-01	5.9706E-03	5.9706E-06	grams	kg	0.705
grams		[redacted]					5.4278E+01	5.4278E-02	
8698640		1.1000E-07							
	U-234	[redacted]		activity mBq	activity mCi	activity Ci	SNM	source	
19160		1.287E+000	1.1429E+00	3.6783E-01	9.9413E-03	9.9413E-06	grams	kg	1.12613
grams		[redacted]					1.6034E-03	1.6034E-06	
8698640		6.2000E-03							
	U-235	[redacted]		activity mBq	activity mCi	activity Ci	SNM	source	
19160		3.308E-001	4.2356E-01	1.3632E-01	3.6844E-03	3.6844E-06	grams	kg	0.781
grams		[redacted]					1.6747E+00	1.6747E-03	
8698640		2.2000E-06							
	U-238	[redacted]		activity mBq	activity mCi	activity Ci	SNM	source	
19160		1.287E+000	1.7368E+00	5.5900E-01	1.5108E-02	1.5108E-05	grams	kg	0.741
grams		[redacted]					4.4436E+01	4.4436E-02	
8698640		3.4000E-07							

Totals for all flag 1 data

		activity pCi/g	corrected	activity mBq	activity mCi	activity Ci	SNM	source	
19160		5.7229E+00	6.6610E+00	2.1576E+00	5.8312E-02	5.8312E-05	grams	kg	flag1 data
			pCi/g	541 will be < than the 540 (MDA not added)			1.6747E+00	9.8716E-02	
152.0634921				data for NORM					
	U-nat	activity pCi/g	corrected pCi/g	activity mBq	activity mCi	activity Ci		source	
		1.6178E+00	2.1604E+00	6.9532E-01	1.8793E-02	1.8793E-05		kg	
		[redacted]						2.6468E-02	
		7.1000E-07							

U-nat	activity pCi/g	corrected pCi/g	activity mBq	activity mCi	activity Ci		source	
	5.7229E+00	6.6610E+00	[redacted]	[redacted]	[redacted]		kg total	norm data
							[redacted]	

X0

container #
9197

shipping check sheet (For Form 540)

	Ac-227		corrected	activity mBq	activity mCi	activity Ci	SNM	source	
		5.685E-002	5.685E-002	1.8058E-02	4.8807E-04	4.8807E-07	grams	kg	
grams			pCi/g				6.7787E-09	6.7787E-12	
8585140		7.2000E+01							
	Pa-231			activity mBq	activity mCi	activity Ci	SNM	source	
18910		2.843E-001	2.843E-001	9.0308E-02	2.4408E-03	2.4408E-06	grams	kg	
grams							5.1931E-05	5.1931E-08	
8585140		4.7000E-02							
	Ra-223			activity mBq	activity mCi	activity Ci	SNM	source	
18910		7.125E-002	7.125E-002	2.2633E-02	6.1169E-04	6.1169E-07	grams	kg	
grams							1.1994E-11	1.1994E-14	
8585140		5.1000E+04							
	Ra-226			activity mBq	activity mCi	activity Ci	SNM	source	
18910		4.253E-001	3.0877E-01	9.8080E-02	2.6508E-03	2.6508E-06	grams	kg	1.37741
grams							2.6508E-06	2.6508E-09	
8585140		1.0000E+00							
	Ra228			activity mBq	activity mCi	activity Ci	SNM	source	
18910		5.132E-001	7.2794E-01	2.3123E-01	6.2495E-03	6.2495E-06	grams	kg	0.705
grams							2.3146E-08	2.3146E-11	
8585140		2.7000E+02							
	TH-227			activity mBq	activity mCi	activity Ci	SNM	source	
18910		5.685E-002	5.685E-002	1.8058E-02	4.8807E-04	4.8807E-07	grams	kg	
grams							1.5744E-11	1.5744E-14	
8585140		3.1000E+04							
	Th-228			activity mBq	activity mCi	activity Ci	SNM	source	
18910		3.575E-001	6.4564E-01	2.0509E-01	5.5430E-03	5.5430E-06	grams	kg	
grams							6.7597E-09	6.7597E-12	0.55371
8585140		8.2000E+02							
	Th-230			activity mBq	activity mCi	activity Ci	SNM	source	
18910		5.132E-001	3.8079E-01	1.2096E-01	3.2692E-03	3.2692E-06	grams	kg	
grams							1.5567E-04	1.5567E-07	1.34771
8585140		2.1000E-02							
	TH-232			activity mBq	activity mCi	activity Ci	SNM	source	
18910		5.132E-001	7.2794E-01	2.3123E-01	6.2495E-03	6.2495E-06	grams	kg	0.705
grams							5.6814E+01	5.6814E-02	
8585140		1.1000E-07							
	U-234			activity mBq	activity mCi	activity Ci	SNM	source	
18910		2.631E+000	2.3363E+00	7.4213E-01	2.0058E-02	2.0058E-05	grams	kg	1.12613
grams							3.2351E-03	3.2351E-06	
8585140		6.2000E-03							
	U-235			activity mBq	activity mCi	activity Ci	SNM	source	
18910		4.190E-001	5.3649E-01	1.7042E-01	4.6059E-03	4.6059E-06	grams	kg	0.781
grams							2.0936E+00	2.0936E-03	
8585140		2.2000E-06							
	U-238			activity mBq	activity mCi	activity Ci	SNM	source	
18910		2.631E+000	3.5506E+00	1.1279E+00	3.0482E-02	3.0482E-05	grams	kg	0.741
grams							8.9654E+01	8.9654E-02	
8585140		3.4000E-07							

Totals for all flag 1 data

			corrected	activity mBq	activity mCi	activity Ci	SNM	source	
18910		8.4727E+00	9.6269E+00	3.0760E+00	8.3136E-02	8.3136E-05	grams	kg	flag1 data
			pCi/g	541 will be < than the 540 (MDA not added)			2.0936E+00	1.4647E-01	
150.0793651				data for NORM					
	U-nat		corrected pCi/g	activity mBq	activity mCi	activity Ci		source	
		3.0500E+00	4.0871E+00	1.2983E+00	3.5088E-02	3.5088E-05		kg	
								4.9420E-02	
		7.1000E-07							

U-nat		corrected pCi/g	activity mBq	activity mCi	activity Ci		source	
	8.4727E+00	9.6269E+00	[illegible]	8.3136E-02	8.3136E-05		kg total	norm data
							1.0624E-01	

X

container #
9195

shipping check sheet (For Form 540)

	Ac-227		corrected	activity mBq	activity mCi	activity Ci	SNM	source	
		9.558E-002	9.558E-002	2.6989E-02	7.2944E-04	7.2944E-07	grams	kg	
grams			pCi/g				1.0131E-08	1.0131E-11	
7631740		7.2000E+01							
	Pa-231			activity mBq	activity mCi	activity Ci	SNM	source	
16810		3.676E-001	3.676E-001	1.0380E-01	2.8054E-03	2.8054E-06	grams	kg	
grams							5.9690E-05	5.9690E-08	
7631740		4.7000E-02							
	Ra-223			activity mBq	activity mCi	activity Ci	SNM	source	
16810		4.952E-002	4.952E-002	1.3983E-02	3.7792E-04	3.7792E-07	grams	kg	
grams							7.4103E-12	7.4103E-15	
7631740		5.1000E+04							
	Ra-226			activity mBq	activity mCi	activity Ci	SNM	source	
16810		2.859E-001	2.0756E-01	5.8611E-02	1.5841E-03	1.5841E-06	grams	kg	1.37741
grams							1.5841E-06	1.5841E-09	
7631740		1.0000E+00							
	Ra228			activity mBq	activity mCi	activity Ci	SNM	source	
16810		3.149E-001	4.4667E-01	1.2613E-01	3.4088E-03	3.4088E-06	grams	kg	0.705
grams							1.2625E-08	1.2625E-11	
7631740		2.7000E+02							
	TH-227			activity mBq	activity mCi	activity Ci	SNM	source	
16810		9.558E-002	9.558E-002	2.6989E-02	7.2944E-04	7.2944E-07	grams	kg	
grams							2.3530E-11	2.3530E-14	
7631740		3.1000E+04							
	Th-228			activity mBq	activity mCi	activity Ci	SNM	source	
16810		3.218E-001	5.8117E-01	1.6411E-01	4.4353E-03	4.4353E-06	grams	kg	
grams							5.4090E-09	5.4090E-12	0.55371
7631740		8.2000E+02							
	Th-230			activity mBq	activity mCi	activity Ci	SNM	source	
16810		3.149E-001	2.3366E-01	6.5978E-02	1.7832E-03	1.7832E-06	grams	kg	
grams							8.4914E-05	8.4914E-08	1.34771
7631740		2.1000E-02							
	TH-232			activity mBq	activity mCi	activity Ci	SNM	source	
16810		3.149E-001	4.4667E-01	1.2613E-01	3.4088E-03	3.4088E-06	grams	kg	0.705
grams							3.0989E+01	3.0989E-02	
7631740		1.1000E-07							
	U-234			activity mBq	activity mCi	activity Ci	SNM	source	
16810		1.781E+000	1.5815E+00	4.4658E-01	1.2070E-02	1.2070E-05	grams	kg	1.12613
grams							1.9467E-03	1.9467E-06	
7631740		6.2000E-03							
	U-235			activity mBq	activity mCi	activity Ci	SNM	source	
16810		2.290E-001	2.9321E-01	8.2796E-02	2.2377E-03	2.2377E-06	grams	kg	0.781
grams							1.0172E+00	1.0172E-03	
7631740		2.2000E-06							
	U-238			activity mBq	activity mCi	activity Ci	SNM	source	
16810		1.781E+000	2.4035E+00	6.7869E-01	1.8343E-02	1.8343E-05	grams	kg	0.741
grams							5.3950E+01	5.3950E-02	
7631740		3.4000E-07							

Totals for all flag 1 data

			corrected	activity mBq	activity mCi	activity Ci	SNM	source	
16810		5.9517E+00	6.7067E+00	1.9208E+00	5.1913E-02	5.1913E-05	grams	kg	flag1 data
			pCi/g	541 will be < than the 540 (MDA not added)			1.0172E+00	8.4941E-02	
133.4126984				data for NORM					
	U-nat		corrected pCi/g	activity mBq	activity mCi	activity Ci		source	
		2.0100E+00	2.6967E+00	7.6149E-01	2.0581E-02	2.0581E-05		kg	
								2.8987E-02	
		7.1000E-07							

U-nat		corrected pCi/g	activity mBq	activity mCi	activity Ci		source	
	5.9517E+00	6.7067E+00	[redacted]	[redacted]	[redacted]		kg total	norm data
							[redacted]

X

container #
9185

shipping check sheet (For Form 540)

	Ac-227		corrected	activity mBq	activity mCi	activity Ci	SNM	source	
		1.392E-001	1.392E-001	4.3586E-02	1.1780E-03	1.1780E-06	grams	kg	
grams			pCi/g				1.6361E-08	1.6361E-11	
8462560		7.2000E+01							
	Pa-231			activity mBq	activity mCi	activity Ci	SNM	source	
18640		5.599E-001	5.599E-001	1.7531E-01	4.7382E-03	4.7382E-06	grams	kg	
grams							1.0081E-04	1.0081E-07	
8462560		4.7000E-02							
	Ra-223			activity mBq	activity mCi	activity Ci	SNM	source	
18640		6.454E-002	6.454E-002	2.0208E-02	5.4617E-04	5.4617E-07	grams	kg	
grams							1.0709E-11	1.0709E-14	
8462560		5.1000E+04							
	Ra-226			activity mBq	activity mCi	activity Ci	SNM	source	
18640		3.552E-001	2.5788E-01	8.0745E-02	2.1823E-03	2.1823E-06	grams	kg	1.37741
grams							2.1823E-06	2.1823E-09	
8462560		1.0000E+00							
	Ra228			activity mBq	activity mCi	activity Ci	SNM	source	
18640		4.645E-001	6.5887E-01	2.0630E-01	5.5757E-03	5.5757E-06	grams	kg	0.705
grams							2.0651E-08	2.0651E-11	
8462560		2.7000E+02							
	TH-227			activity mBq	activity mCi	activity Ci	SNM	source	
18640		1.392E-001	1.392E-001	4.3586E-02	1.1780E-03	1.1780E-06	grams	kg	
grams							3.8000E-11	3.8000E-14	
8462560		3.1000E+04							
	Th-228			activity mBq	activity mCi	activity Ci	SNM	source	
18640		4.434E-001	8.0078E-01	2.5074E-01	6.7767E-03	6.7767E-06	grams	kg	
grams							8.2642E-09	8.2642E-12	0.55371
8462560		8.2000E+02							
	Th-230			activity mBq	activity mCi	activity Ci	SNM	source	
18640		4.645E-001	3.4466E-01	1.0792E-01	2.9167E-03	2.9167E-06	grams	kg	
grams							1.3889E-04	1.3889E-07	1.34771
8462560		2.1000E-02							
	TH-232			activity mBq	activity mCi	activity Ci	SNM	source	
18640		4.645E-001	6.5887E-01	2.0630E-01	5.5757E-03	5.5757E-06	grams	kg	0.705
grams							5.0688E+01	5.0688E-02	
8462560		1.1000E-07							
	U-234			activity mBq	activity mCi	activity Ci	SNM	source	
18640		6.016E+000	5.3422E+00	1.6727E+00	4.5209E-02	4.5209E-05	grams	kg	1.12613
grams							7.2917E-03	7.2917E-06	
8462560		6.2000E-03							
	U-235			activity mBq	activity mCi	activity Ci	SNM	source	
18640		4.052E-001	5.1882E-01	1.6245E-01	4.3906E-03	4.3906E-06	grams	kg	0.781
grams							1.9957E+00	1.9957E-03	
8462560		2.2000E-06							
	U-238			activity mBq	activity mCi	activity Ci	SNM	source	
18640		6.016E+000	8.1188E+00	2.5421E+00	6.8705E-02	6.8705E-05	grams	kg	0.741
grams							2.0207E+02	2.0207E-01	
8462560		3.4000E-07							

Totals for all flag 1 data

			corrected	activity mBq	activity mCi	activity Ci	SNM	source	
18640		1.5532E+01	1.7464E+01	5.5120E+00	1.4897E-01	1.4897E-04	grams	kg	flag1 data
			pCi/g	541 will be < than the 540 (MDA not added)			1.9957E+00	2.5277E-01	
147.9365079				data for NORM					
	U-nat		corrected pCi/g	activity mBq	activity mCi	activity Ci		source	
		6.4212E+00	8.6376E+00	2.7046E+00	7.3096E-02	7.3096E-05		kg	
								1.0295E-01	
		7.1000E-07							

U-nat		corrected pCi/g	activity mBq	activity mCi	activity Ci		source
	1.5532E+01	1.7464E+01	5.5120E+00	1.4897E-01	1.4897E-04		kg total
							[illegible]

norm data

container #
9179

shipping check sheet (For Form 540)

	Ac-227	activity pCi/g	corrected	activity mBq	activity mCi	activity Ci	SNM	source	
		4.143E-002	4.143E-002	1.4392E-02	3.8897E-04	3.8897E-07	grams	kg	
grams		spec activity	pCi/g				5.4024E-09	5.4024E-12	
9388720		7.2000E+01							
	Pa-231	activity pCi/g		activity mBq	activity mCi	activity Ci	SNM	source	
20680		2.163E-001	2.163E-001	7.5139E-02	2.0308E-03	2.0308E-06	grams	kg	
grams		spec activity					4.3208E-05	4.3208E-08	
9388720		4.7000E-02							
	Ra-223	activity pCi/g		activity mBq	activity mCi	activity Ci	SNM	source	
20680		5.705E-002	5.705E-002	1.9818E-02	5.3563E-04	5.3563E-07	grams	kg	
grams		spec activity					1.0502E-11	1.0502E-14	
9388720		5.1000E+04							
	Ra-226	activity pCi/g		activity mBq	activity mCi	activity Ci	SNM	source	
20680		2.618E-001	1.9007E-01	6.6026E-02	1.7845E-03	1.7845E-06	grams	kg	1.37741
grams		spec activity					1.7845E-06	1.7845E-09	
9388720		1.0000E+00							
	Ra228	activity pCi/g		activity mBq	activity mCi	activity Ci	SNM	source	
20680		4.714E-001	6.6865E-01	2.3228E-01	6.2778E-03	6.2778E-06	grams	kg	0.705
grams		spec activity					2.3251E-08	2.3251E-11	
9388720		2.7000E+02							
	TH-227	activity pCi/g		activity mBq	activity mCi	activity Ci	SNM	source	
20680		4.143E-002	4.143E-002	1.4392E-02	3.8897E-04	3.8897E-07	grams	kg	
grams		spec activity					1.2548E-11	1.2548E-14	
9388720		3.1000E+04							
	Th-228	activity pCi/g		activity mBq	activity mCi	activity Ci	SNM	source	
20680		3.807E-001	6.8754E-01	2.3884E-01	6.4552E-03	6.4552E-06	grams	kg	
grams		spec activity					7.8721E-09	7.8721E-12	0.55371
9388720		8.2000E+02							
	Th-230	activity pCi/g		activity mBq	activity mCi	activity Ci	SNM	source	
20680		4.714E-001	3.4978E-01	1.2151E-01	3.2840E-03	3.2840E-06	grams	kg	
grams		spec activity					1.5638E-04	1.5638E-07	1.34771
9388720		2.1000E-02							
	TH-232	activity pCi/g		activity mBq	activity mCi	activity Ci	SNM	source	
20680		4.714E-001	6.6865E-01	2.3228E-01	6.2778E-03	6.2778E-06	grams	kg	0.705
grams		spec activity					5.7071E+01	5.7071E-02	
9388720		1.1000E-07							
	U-234	activity pCi/g		activity mBq	activity mCi	activity Ci	SNM	source	
20680		1.270E+001	1.1278E+01	3.9176E+00	1.0588E-01	1.0588E-04	grams	kg	1.12613
grams		spec activity					1.7078E-02	1.7078E-05	
9388720		6.2000E-03							
	U-235	activity pCi/g		activity mBq	activity mCi	activity Ci	SNM	source	
20680		8.496E-001	1.0878E+00	3.7790E-01	1.0213E-02	1.0213E-05	grams	kg	0.781
grams		spec activity					4.6424E+00	4.6424E-03	
9388720		2.2000E-06							
	U-238	activity pCi/g		activity mBq	activity mCi	activity Ci	SNM	source	
20680		1.270E+001	1.7139E+01	5.9538E+00	1.6091E-01	1.6091E-04	grams	kg	0.741
grams		spec activity					4.7327E+02	4.7327E-01	
9388720		3.4000E-07							

Totals for all flag 1 data

		activity pCi/g	corrected	activity mBq	activity mCi	activity Ci	SNM	source	
20680		2.8663E+01	3.2384E+01	1.1264E+01	3.0443E-01	3.0443E-04	grams	kg	flag1 data
			pCi/g	541 will be < than the 540 (MDA not added)			4.6424E+00	5.3036E-01	
164.1269841				data for NORM					
	U-nat	activity pCi/g	corrected pCi/g	activity mBq	activity mCi	activity Ci		source	
		1.3550E+01	1.8227E+01	6.3317E+00	1.7113E-01	1.7113E-04		kg	
		spec activity						2.4102E-01	
		7.1000E-07							

U-nat	activity pCi/g	corrected pCi/g	activity mBq	activity mCi	activity Ci		source	
	2.8663E+01	3.2384E+01	1.1264E+01	3.0443E-01	3.0443E-04		kg total	norm data
							2.9611E-01	

X

container #
9187

shipping check sheet (For Form 540)

	Ac-227	activity pCi/g	corrected	activity mBq	activity mCi	activity Ci	SNM	source	
		6.421E-002	6.421E-002	1.8401E-02	4.9732E-04	4.9732E-07	grams	kg	
grams		spec activity	pCi/g				6.9072E-09	6.9072E-12	
7745240		7.2000E+01							
	Pa-231	activity pCi/g		activity mBq	activity mCi	activity Ci	SNM	source	
17060		5.424E-001	5.424E-001	1.5544E-01	4.2010E-03	4.2010E-06	grams	kg	
grams		spec activity					8.9383E-05	8.9383E-08	
7745240		4.7000E-02							
	Ra-223	activity pCi/g		activity mBq	activity mCi	activity Ci	SNM	source	
17060		1.488E-001	1.488E-001	4.2642E-02	1.1525E-03	1.1525E-06	grams	kg	
grams		spec activity					2.2598E-11	2.2598E-14	
7745240		5.1000E+04							
	Ra-226	activity pCi/g		activity mBq	activity mCi	activity Ci	SNM	source	
17060		4.627E-001	3.3592E-01	9.6266E-02	2.6018E-03	2.6018E-06	grams	kg	1.37741
grams		spec activity					2.6018E-06	2.6018E-09	
7745240		1.0000E+00							
	Ra228	activity pCi/g		activity mBq	activity mCi	activity Ci	SNM	source	
17060		5.534E-001	7.8496E-01	2.2495E-01	6.0797E-03	6.0797E-06	grams	kg	0.705
grams		spec activity					2.2518E-08	2.2518E-11	
7745240		2.7000E+02							
	TH-227	activity pCi/g		activity mBq	activity mCi	activity Ci	SNM	source	
17060		6.421E-002	6.421E-002	1.8401E-02	4.9732E-04	4.9732E-07	grams	kg	
grams		spec activity					1.6043E-11	1.6043E-14	
7745240		3.1000E+04							
	Th-228	activity pCi/g		activity mBq	activity mCi	activity Ci	SNM	source	
17060		4.834E-001	8.7302E-01	2.5018E-01	6.7618E-03	6.7618E-06	grams	kg	
grams		spec activity					8.2460E-09	8.2460E-12	0.55371
7745240		8.2000E+02							
	Th-230	activity pCi/g		activity mBq	activity mCi	activity Ci	SNM	source	
17060		5.534E-001	4.1062E-01	1.1767E-01	3.1804E-03	3.1804E-06	grams	kg	
grams		spec activity					1.5145E-04	1.5145E-07	1.34771
7745240		2.1000E-02							
	TH-232	activity pCi/g		activity mBq	activity mCi	activity Ci	SNM	source	
17060		5.534E-001	7.8496E-01	2.2495E-01	6.0797E-03	6.0797E-06	grams	kg	0.705
grams		spec activity					5.5270E+01	5.5270E-02	
7745240		1.1000E-07							
	U-234	activity pCi/g		activity mBq	activity mCi	activity Ci	SNM	source	
17060		2.627E+000	2.3328E+00	6.6851E-01	1.8068E-02	1.8068E-05	grams	kg	1.12613
grams		spec activity					2.9142E-03	2.9142E-06	
7745240		6.2000E-03							
	U-235	activity pCi/g		activity mBq	activity mCi	activity Ci	SNM	source	
17060		2.109E-001	2.7004E-01	7.7386E-02	2.0915E-03	2.0915E-06	grams	kg	0.781
grams		spec activity					9.5069E-01	9.5069E-04	
7745240		2.2000E-06							
	U-238	activity pCi/g		activity mBq	activity mCi	activity Ci	SNM	source	
17060		2.627E+000	3.5452E+00	1.0160E+00	2.7458E-02	2.7458E-05	grams	kg	0.741
grams		spec activity					8.0760E+01	8.0760E-02	
7745240		3.4000E-07							

Totals for all flag 1 data

		activity pCi/g	corrected	activity mBq	activity mCi	activity Ci	SNM	source	
17060		8.8908E+00	1.0093E+01	2.9108E+00	7.8669E-02	7.8669E-05	grams	kg	flag1 data
			pCi/g	541 will be < than the 540 (MDA not added)			9.5069E-01	1.3603E-01	
135.3968254				data for NORM					
	U-nat	activity pCi/g	corrected pCi/g	activity mBq	activity mCi	activity Ci		source	
		2.8379E+00	3.[illegible]E+00	1.0934E+00	2.9550E-02	2.9550E-05		kg	
		spec activity						4.1620E-02	
		7.1000E-07							

U-nat	activity pCi/g	corrected pCi/g	activity mBq	activity mCi	activity Ci		source	
	8.8908E+00	1.0093E+01	2.9108E+00	7.8669E-02	7.8669E-05		kg total	norm data
							[illegible]	

P

container #
9178

shipping check sheet (For Form 540)

	Ac-227	activity pCi/g	corrected	activity mBq	activity mCi	activity Ci	SNM	source	
		1.732E-001	1.732E-001	5.6210E-02	1.5192E-03	1.5192E-06	grams	kg	
grams		spec activity	pCi/g				2.1100E-08	2.1100E-11	
8771280		7.2000E+01							
	Pa-231	activity pCi/g		activity mBq	activity mCi	activity Ci	SNM	source	
19320		3.661E-001	3.661E-001	1.1881E-01	3.2112E-03	3.2112E-06	grams	kg	
grams		spec activity					6.8323E-05	6.8323E-08	
8771280		4.7000E-02							
	Ra-223	activity pCi/g		activity mBq	activity mCi	activity Ci	SNM	source	
19320		9.564E-002	9.564E-002	3.1039E-02	8.3889E-04	8.3889E-07	grams	kg	
grams		spec activity					1.6449E-11	1.6449E-14	
8771280		5.1000E+04							
	Ra-226	activity pCi/g		activity mBq	activity mCi	activity Ci	SNM	source	
19320		5.524E-001	4.0104E-01	1.3015E-01	3.5177E-03	3.5177E-06	grams	kg	1.37741
grams		spec activity					3.5177E-06	3.5177E-09	
8771280		1.0000E+00							
	Ra228	activity pCi/g		activity mBq	activity mCi	activity Ci	SNM	source	
19320		7.589E-001	1.0765E+00	3.4935E-01	9.4419E-03	9.4419E-06	grams	kg	0.705
grams		spec activity					3.4970E-08	3.4970E-11	
8771280		2.7000E+02							
	TH-227	activity pCi/g		activity mBq	activity mCi	activity Ci	SNM	source	
19320		1.732E-001	1.732E-001	5.6210E-02	1.5192E-03	1.5192E-06	grams	kg	
grams		spec activity					4.9006E-11	4.9006E-14	
8771280		3.1000E+04							
	Th-228	activity pCi/g		activity mBq	activity mCi	activity Ci	SNM	source	
19320		7.145E-001	1.2904E+00	4.1878E-01	1.1318E-02	1.1318E-05	grams	kg	
grams		spec activity					1.3803E-08	1.3803E-11	0.55371
8771280		8.2000E+02							
	Th-230	activity pCi/g		activity mBq	activity mCi	activity Ci	SNM	source	
19320		7.589E-001	5.6310E-01	1.8275E-01	4.9391E-03	4.9391E-06	grams	kg	
grams		spec activity					2.3520E-04	2.3520E-07	1.34771
8771280		2.1000E-02							
	TH-232	activity pCi/g		activity mBq	activity mCi	activity Ci	SNM	source	
19320		7.589E-001	1.0765E+00	3.4935E-01	9.4419E-03	9.4419E-06	grams	kg	0.705
grams		spec activity					8.5835E+01	8.5835E-02	
8771280		1.1000E-07							
	U-234	activity pCi/g		activity mBq	activity mCi	activity Ci	SNM	source	
19320		1.855E+001	1.6472E+01	5.3459E+00	1.4448E-01	1.4448E-04	grams	kg	1.12613
grams		spec activity					2.3304E-02	2.3304E-05	
8771280		6.2000E-03							
	U-235	activity pCi/g		activity mBq	activity mCi	activity Ci	SNM	source	
19320		1.213E+000	1.5531E+00	5.0405E-01	1.3623E-02	1.3623E-05	grams	kg	0.781
grams		spec activity					6.1923E+00	6.1923E-03	
8771280		2.2000E-06							
	U-238	activity pCi/g		activity mBq	activity mCi	activity Ci	SNM	source	
19320		1.855E+001	2.5034E+01	8.1244E+00	2.1958E-01	2.1958E-04	grams	kg	0.741
grams		spec activity					6.4582E+02	6.4582E-01	
8771280		3.4000E-07							

Totals for all flag 1 data

		activity pCi/g	corrected	activity mBq	activity mCi	activity Ci	SNM	source	
19320		4.2665E+01	4.8102E+01	1.5667E+01	4.2343E-01	4.2343E-04	grams	kg	flag1 data
			pCi/g	541 will be < than the 540 (MDA not added)			6.1923E+00	7.3168E-01	
153.3333333				data for NORM					
	U-nat	activity pCi/g	corrected pCi/g	activity mBq	activity mCi	activity Ci		source	
		1.9763E+01	2.6667E+01	8.6284E+00	2.3320E-01	2.3320E-04		kg	
		spec activity						3.2845E-01	
		7.1000E-07							

U-nat	activity pCi/g	corrected pCi/g	activity mBq	activity mCi	activity Ci		source	
	4.2665E+01	4.8102E+01	1.5667E+01	4.2343E-01	4.2343E-04		kg total	norm data
							[illegible]	

X

container #
9177

shipping check sheet (For Form 540)

	Ac-227	activity pCi/g	corrected	activity mBq	activity mCi	activity Ci	SNM	source	
		6.023E-002	6.023E-002	2.0407E-02	5.5154E-04	5.5154E-07	grams	kg	
grams		spec activity	pCi/g				7.6602E-09	7.6602E-12	
9157180		7.2000E+01							
	Pa-231	activity pCi/g		activity mBq	activity mCi	activity Ci	SNM	source	
20170		2.227E-001	2.227E-001	7.5454E-02	2.0393E-03	2.0393E-06	grams	kg	
grams		spec activity					4.3389E-05	4.3389E-08	
9157180		4.7000E-02							
	Ra-223	activity pCi/g		activity mBq	activity mCi	activity Ci	SNM	source	
20170		1.050E-001	1.050E-001	3.5576E-02	9.6150E-04	9.6150E-07	grams	kg	
grams		spec activity					1.8853E-11	1.8853E-14	
9157180		5.1000E+04							
	Ra-226	activity pCi/g		activity mBq	activity mCi	activity Ci	SNM	source	
20170		3.472E-001	2.5207E-01	8.5404E-02	2.3082E-03	2.3082E-06	grams	kg	1.37741
grams		spec activity					2.3082E-06	2.3082E-09	
9157180		1.0000E+00							
	Ra228	activity pCi/g		activity mBq	activity mCi	activity Ci	SNM	source	
20170		5.532E-001	7.8468E-01	2.6586E-01	7.1855E-03	7.1855E-06	grams	kg	0.705
grams		spec activity					2.6613E-08	2.6613E-11	
9157180		2.7000E+02							
	TH-227	activity pCi/g		activity mBq	activity mCi	activity Ci	SNM	source	
20170		6.023E-002	6.023E-002	2.0407E-02	5.5154E-04	5.5154E-07	grams	kg	
grams		spec activity					1.7792E-11	1.7792E-14	
9157180		3.1000E+04							
	Th-228	activity pCi/g		activity mBq	activity mCi	activity Ci	SNM	source	
20170		4.581E-001	8.2733E-01	2.8031E-01	7.5760E-03	7.5760E-06	grams	kg	
grams		spec activity					9.2390E-09	9.2390E-12	0.55371
9157180		8.2000E+02							
	Th-230	activity pCi/g		activity mBq	activity mCi	activity Ci	SNM	source	
20170		5.532E-001	4.1047E-01	1.3908E-01	3.7588E-03	3.7588E-06	grams	kg	
grams		spec activity					1.7899E-04	1.7899E-07	1.34771
9157180		2.1000E-02							
	TH-232	activity pCi/g		activity mBq	activity mCi	activity Ci	SNM	source	
20170		5.532E-001	7.8468E-01	2.6586E-01	7.1855E-03	7.1855E-06	grams	kg	0.705
grams		spec activity					6.5322E+01	6.5322E-02	
9157180		1.1000E-07							
	U-234	activity pCi/g		activity mBq	activity mCi	activity Ci	SNM	source	
20170		1.731E+001	1.5371E+01	5.2080E+00	1.4076E-01	1.4076E-04	grams	kg	1.12613
grams		spec activity					2.2703E-02	2.2703E-05	
9157180		6.2000E-03							
	U-235	activity pCi/g		activity mBq	activity mCi	activity Ci	SNM	source	
20170		9.889E-001	1.2662E+00	4.2901E-01	1.1595E-02	1.1595E-05	grams	kg	0.781
grams		spec activity					5.2704E+00	5.2704E-03	
9157180		2.2000E-06							
	U-238	activity pCi/g		activity mBq	activity mCi	activity Ci	SNM	source	
20170		1.731E+001	2.3360E+01	7.9148E+00	2.1391E-01	2.1391E-04	grams	kg	0.741
grams		spec activity					6.2916E+02	6.2916E-01	
9157180		3.4000E-07							

Totals for all flag 1 data

		activity pCi/g	corrected	activity mBq	activity mCi	activity Ci	SNM	source	
20170		3.8522E+01	4.3445E+01	1.4740E+01	3.9838E-01	3.9838E-04	grams	kg	flag1 data
			pCi/g	541 will be < than the 540 (MDA not added)			5.2704E+00	6.9451E-01	
160 0708651				data for NORM					
	U-nat	activity pCi/g	corrected pCi/g	activity mBq	activity mCi	activity Ci		source	
		1.8299E+01	2.4627E+01	8.3439E+00	2.2551E-01	2.2551E-04		kg	
		spec activity						3.1762E-01	
		7.1000E-07							

U-nat	activity pCi/g	corrected pCi/g	activity mBq	activity mCi	activity Ci		source	
	3.8522E+01	4.3445E+01	1.4740E+01	[illegible]	[illegible]		kg total	norm data
							[illegible]	

X

container #
9158

shipping check sheet (For Form 540)

	Ac-227	activity pCi/g	corrected	activity mBq	activity mCi	activity Ci	SNM	source	
		1.047E-001	1.047E-001	2.0577E-02	5.5615E-04	5.5615E-07	grams	kg	
grams		spec activity	pCi/g				7.7242E-09	7.7242E-12	
5311800		7.2000E+01							
	Pa-231	activity pCi/g		activity mBq	activity mCi	activity Ci	SNM	source	
11700		3.612E-001	3.612E-001	7.0989E-02	1.9186E-03	1.9186E-06	grams	kg	
grams		spec activity					4.0822E-05	4.0822E-08	
5311800		4.7000E-02							
	Ra-223	activity pCi/g		activity mBq	activity mCi	activity Ci	SNM	source	
11700		7.655E-002	7.655E-002	1.5045E-02	4.0662E-04	4.0662E-07	grams	kg	
grams		spec activity					7.9729E-12	7.9729E-15	
5311800		5.1000E+04							
	Ra-226	activity pCi/g		activity mBq	activity mCi	activity Ci	SNM	source	
11700		3.363E-001	2.4415E-01	4.7985E-02	1.2969E-03	1.2969E-06	grams	kg	1.37741
grams		spec activity					1.2969E-06	1.2969E-09	
5311800		1.0000E+00							
	Ra228	activity pCi/g		activity mBq	activity mCi	activity Ci	SNM	source	
11700		3.491E-001	4.9518E-01	9.7320E-02	2.6303E-03	2.6303E-06	grams	kg	0.705
grams		spec activity					9.7418E-09	9.7418E-12	
5311800		2.7000E+02							
	TH-227	activity pCi/g		activity mBq	activity mCi	activity Ci	SNM	source	
11700		1.047E-001	1.047E-001	2.0577E-02	5.5615E-04	5.5615E-07	grams	kg	
grams		spec activity					1.7940E-11	1.7940E-14	
5311800		3.1000E+04							
	Th-228	activity pCi/g		activity mBq	activity mCi	activity Ci	SNM	source	
11700		4.471E-001	8.0746E-01	1.5870E-01	4.2891E-03	4.2891E-06	grams	kg	
grams		spec activity					5.2306E-09	5.2306E-12	0.55371
5311800		8.2000E+02							
	Th-230	activity pCi/g		activity mBq	activity mCi	activity Ci	SNM	source	
11700		3.491E-001	2.5903E-01	5.0909E-02	1.3759E-03	1.3759E-06	grams	kg	
grams		spec activity					6.5520E-05	6.5520E-08	1.34771
5311800		2.1000E-02							
	TH-232	activity pCi/g		activity mBq	activity mCi	activity Ci	SNM	source	
11700		3.491E-001	4.9518E-01	9.7320E-02	2.6303E-03	2.6303E-06	grams	kg	0.705
grams		spec activity					2.3912E+01	2.3912E-02	
5311800		1.1000E-07							
	U-234	activity pCi/g		activity mBq	activity mCi	activity Ci	SNM	source	
11700		2.998E+001	2.6622E+01	5.2322E+00	1.4141E-01	1.4141E-04	grams	kg	1.12613
grams		spec activity					2.2808E-02	2.2808E-05	
5311800		6.2000E-03							
	U-235	activity pCi/g		activity mBq	activity mCi	activity Ci	SNM	source	
11700		1.482E+000	1.8976E+00	3.7294E-01	1.0079E-02	1.0079E-05	grams	kg	0.781
grams		spec activity					4.5816E+00	4.5816E-03	
5311800		2.2000E-06							
	U-238	activity pCi/g		activity mBq	activity mCi	activity Ci	SNM	source	
11700		2.998E+001	4.0459E+01	7.9516E+00	2.1491E-01	2.1491E-04	grams	kg	0.741
grams		spec activity					6.3209E+02	6.3209E-01	
5311800		3.4000E-07							

Totals for all flag 1 data

		activity pCi/g	corrected	activity mBq	activity mCi	activity Ci	SNM	source	
11700		6.3920E+01	7.1822E+01	1.4136E+01	3.8206E-01	3.8206E-04	grams	kg	flag1 data
			pCi/g	541 will be < than the 540 (MDA not added)			4.5816E+00	6.5602E-01	
92.85714286				data for NORM					
	U-nat	activity pCi/g	corrected pCi/g	activity mBq	activity mCi	activity Ci		source	
		3.1462E+01	4.2356E+01	8.3246E+00	2.2499E-01	2.2499E-04		kg	
		spec activity						3.1689E-01	
		7.1000E-07							

U-nat	activity pCi/g	corrected pCi/g	activity mBq	activity mCi	activity Ci		source	
	6.3920E+01	7.1822E+01	1.4136E+01	3.8206E-01	3.8206E-04		kg total	norm data
							[illegible]	

X

container #
9182

shipping check sheet (For Form 540)

	Ac-227	activity-pCi/g	corrected	activity mBq	activity mCi	activity Ci	SNM	source	
		7.638E-002	7.638E-002	2.3736E-02	6.4152E-04	6.4152E-07	grams	kg	
grams		spec activity	pCi/g				8.9099E-09	8.9099E-12	
8399000		7.2000E+01							
	Pa-231	activity-pCi/g		activity mBq	activity mCi	activity Ci	SNM	source	
18500		4.007E-001	4.007E-001	1.2452E-01	3.3655E-03	3.3655E-06	grams	kg	
grams		spec activity					7.1606E-05	7.1606E-08	
8399000		4.7000E-02							
	Ra-223	activity-pCi/g		activity mBq	activity mCi	activity Ci	SNM	source	
18500		7.440E-002	7.440E-002	2.3121E-02	6.2489E-04	6.2489E-07	grams	kg	
grams		spec activity					1.2253E-11	1.2253E-14	
8399000		5.1000E+04							
	Ra-226	activity-pCi/g		activity mBq	activity mCi	activity Ci	SNM	source	
18500		4.193E-001	3.0441E-01	9.4600E-02	2.5568E-03	2.5568E-06	grams	kg	1.37741
grams		spec activity					2.5568E-06	2.5568E-09	
8399000		1.0000E+00							
	Ra228	activity-pCi/g		activity mBq	activity mCi	activity Ci	SNM	source	
18500		5.373E-001	7.6213E-01	2.3684E-01	6.4011E-03	6.4011E-06	grams	kg	0.705
grams		spec activity					2.3708E-08	2.3708E-11	
8399000		2.7000E+02							
	TH-227	activity-pCi/g		activity mBq	activity mCi	activity Ci	SNM	source	
18500		7.638E-002	7.638E-002	2.3736E-02	6.4152E-04	6.4152E-07	grams	kg	
grams		spec activity					2.0694E-11	2.0694E-14	
8399000		3.1000E+04							
	Th-228	activity-pCi/g		activity mBq	activity mCi	activity Ci	SNM	source	
18500		4.834E-001	8.7302E-01	2.7130E-01	7.3325E-03	7.3325E-06	grams	kg	
grams		spec activity					8.9421E-09	8.9421E-12	0.55371
8399000		8.2000E+02							
	Th-230	activity-pCi/g		activity mBq	activity mCi	activity Ci	SNM	source	
18500		5.373E-001	3.9868E-01	1.2389E-01	3.3485E-03	3.3485E-06	grams	kg	
grams		spec activity					1.5945E-04	1.5945E-07	1.34771
8399000		2.1000E-02							
	TH-232	activity-pCi/g		activity mBq	activity mCi	activity Ci	SNM	source	
18500		5.373E-001	7.6213E-01	2.3684E-01	6.4011E-03	6.4011E-06	grams	kg	0.705
grams		spec activity					5.8192E+01	5.8192E-02	
8399000		1.1000E-07							
	U-234	activity-pCi/g		activity mBq	activity mCi	activity Ci	SNM	source	
18500		1.637E+001	1.4537E+01	4.5174E+00	1.2209E-01	1.2209E-04	grams	kg	1.12613
grams		spec activity					1.9692E-02	1.9692E-05	
8399000		6.2000E-03							
	U-235	activity-pCi/g		activity mBq	activity mCi	activity Ci	SNM	source	
18500		8.289E-001	1.0613E+00	3.2982E-01	8.9141E-03	8.9141E-06	grams	kg	0.781
grams		spec activity					4.0519E+00	4.0519E-03	
8399000		2.2000E-06							
	U-238	activity-pCi/g		activity mBq	activity mCi	activity Ci	SNM	source	
18500		1.637E+001	2.2092E+01	6.8653E+00	1.8555E-01	1.8555E-04	grams	kg	0.741
grams		spec activity					5.4573E+02	5.4573E-01	
8399000		3.4000E-07							

Totals for all flag 1 data

		activity-pCi/g	corrected	activity mBq	activity mCi	activity Ci	SNM	source	
18500		3.6711E+01	4.1341E+01	1.2871E+01	3.4787E-01	3.4787E-04	grams	kg	flag1 data
			pCi/g	541 will be < than the 540 (MDA not added)			4.0519E+00	6.0394E-01	
146.8253968				data for NORM					
	U-nat	activity-pCi/g	corrected pCi/g	activity mBq	activity mCi	activity Ci		source	
		1.7199E+01	2.3153E+01	7.1951E+00	1.9446E-01	1.9446E-04		kg	
		spec activity						2.7389E-01	
		7.1000E-07							

U-nat	activity-pCi/g	corrected pCi/g	activity mBq	activity mCi	activity Ci		source	
	3.6711E+01	4.1341E+01	1.2871E+01	3.4787E-01	3.4787E-04		kg total	norm data
							6.3210E-01	

X

container #
9153

shipping check sheet (For Form 540)

	Ac-227	activity-pCi/g	corrected	activity mBq	activity mCi	activity Ci	SNM	source	
		1.097E-001	1.097E-001	2.0141E-02	5.4436E-04	5.4436E-07	grams	kg	
grams		spec activity	pCi/g				7.5605E-09	7.5605E-12	
4962220		7.2000E+01							
	Pa-231	activity-pCi/g		activity mBq	activity mCi	activity Ci	SNM	source	
10930		1.159E+000	1.159E+000	2.1279E-01	5.7512E-03	5.7512E-06	grams	kg	
grams		spec activity					1.2237E-04	1.2237E-07	
4962220		4.7000E-02							
	Ra-223	activity-pCi/g		activity mBq	activity mCi	activity Ci	SNM	source	
10930		9.882E-002	9.882E-002	1.8144E-02	4.9037E-04	4.9037E-07	grams	kg	
grams		spec activity					9.6150E-12	9.6150E-15	
4962220		5.1000E+04							
	Ra-226	activity-pCi/g		activity mBq	activity mCi	activity Ci	SNM	source	
10930		3.349E-001	2.4314E-01	4.4641E-02	1.2065E-03	1.2065E-06	grams	kg	1.37741
grams		spec activity					1.2065E-06	1.2065E-09	
4962220		1.0000E+00							
	Ra228	activity-pCi/g		activity mBq	activity mCi	activity Ci	SNM	source	
10930		9.881E-001	1.4016E+00	2.5733E-01	6.9549E-03	6.9549E-06	grams	kg	0.705
grams		spec activity					2.5759E-08	2.5759E-11	
4962220		2.7000E+02							
	TH-227	activity-pCi/g		activity mBq	activity mCi	activity Ci	SNM	source	
10930		1.097E-001	1.097E-001	2.0141E-02	5.4436E-04	5.4436E-07	grams	kg	
grams		spec activity					1.7560E-11	1.7560E-14	
4962220		3.1000E+04							
	Th-228	activity-pCi/g		activity mBq	activity mCi	activity Ci	SNM	source	
10930		7.596E-001	1.3718E+00	2.5187E-01	6.8074E-03	6.8074E-06	grams	kg	
grams		spec activity					8.3017E-09	8.3017E-12	0.55371
4962220		8.2000E+02							
	Th-230	activity-pCi/g		activity mBq	activity mCi	activity Ci	SNM	source	
10930		9.881E-001	7.3317E-01	1.3461E-01	3.6381E-03	3.6381E-06	grams	kg	
grams		spec activity					1.7325E-04	1.7325E-07	1.34771
4962220		2.1000E-02							
	TH-232	activity-pCi/g		activity mBq	activity mCi	activity Ci	SNM	source	
10930		9.881E-001	1.4016E+00	2.5733E-01	6.9549E-03	6.9549E-06	grams	kg	0.705
grams		spec activity					6.3226E+01	6.3226E-02	
4962220		1.1000E-07							
	U-234	activity-pCi/g		activity mBq	activity mCi	activity Ci	SNM	source	
10930		8.725E+001	7.7478E+01	1.4225E+01	3.8446E-01	3.8446E-04	grams	kg	1.12613
grams		spec activity					6.2010E-02	6.2010E-05	
4962220		6.2000E-03							
	U-235	activity-pCi/g		activity mBq	activity mCi	activity Ci	SNM	source	
10930		4.657E+000	5.9629E+00	1.0948E+00	2.9589E-02	2.9589E-05	grams	kg	0.781
grams		spec activity					1.3450E+01	1.3450E-02	
4962220		2.2000E-06							
	U-238	activity-pCi/g		activity mBq	activity mCi	activity Ci	SNM	source	
10930		8.725E+001	1.1775E+02	2.1618E+01	5.8428E-01	5.8428E-04	grams	kg	0.741
grams		spec activity					1.7185E+03	1.7185E+00	
4962220		3.4000E-07							

Totals for all flag 1 data

		activity-pCi/g	corrected	activity mBq	activity mCi	activity Ci	SNM	source	
10930		1.8469E+02	2.0771E+02	3.8155E+01	1.0312E+00	1.0312E-03	grams	kg	flag1 data
			pCi/g	541 will be < than the 540 (MDA not added)			1.3450E+01	1.7818E+00	
86.74603175				data for NORM					
	U-nat	activity-pCi/g	corrected pCi/g	activity mBq	activity mCi	activity Ci		source	
		9.1907E+01	1.2371E+02	2.2713E+01	6.1387E-01	6.1387E-04		kg	
		spec activity						8.6461E-01	
		7.1000E-07							

U-nat	activity-pCi/g	corrected pCi/g	activity mBq	activity mCi	activity Ci		source	
	1.8469E+02	2.0771E+02	3.8155E+01	1.0312E+00	1.0312E-03		kg total	norm data
							1.7790E-01	

X

FORM 540 — Envirocare of Utah, Inc.

UNIFORM LOW-LEVEL RADIOACTIVE WASTE MANIFEST

SHIPPING PAPER

1. EMERGENCY TELEPHONE NUMBER (Include Area Code): 1-800-424-9300

ORGANIZATION: Chemtrec

2. IS THIS AN "EXCLUSIVE USE" SHIPMENT? ☐ YES ☑ NO

3. TOTAL NUMBER OF PACKAGES IDENTIFIED ON THIS MANIFEST ==== > 10

4. DOES EPA REGULATED WASTE REQUIRING A MANIFEST ACCOMPANY THIS SHIPMENT? ☐ YES ☑ NO
If "Yes," provide Manifest Number ====>

EPA MANIFEST NUMBER

5. SHIPPER – NAME AND FACILITY
GTEOSI
140 Cantiague Rock RD
Hicksville, NY 11801

Utah Generator Site Access Permit No.: 020 500 1352

SHIPMENT NUMBER: NHRX-0766

CONTACT: Jean Agostinelli

6. CARRIER – Name and Address
Priority Transport Services, Inc.
381 Anthony Street
Schenectady, NY 12308

CONTACT: Dispatch

SIGNATURE – Authorized carrier acknowledging waste receipt

SHIPPER I.D. NUMBER: 0840-01-984

☐ COLLECTOR
☐ PROCESSOR
☑ GENERATOR TYPE (Specify) 1

TELEPHONE NUMBER (Include Area Code): 516-932-0157

EPA I.D. NUMBER: NYR000104976

SHIPPING DATE: 05/19/2005

TELEPHONE (Include Area Code): 800-235-0069

DATE: 5-19-05

7. FORM 540 AND 540A — PAGE 1 OF 3 PAGE(S)
FORM 541 AND 541A — 5 PAGE(S)
FORM 542 AND 542A — None PAGE(S)
ADDITIONAL INFORMATION — None PAGE(S)

8. MANIFEST NUMBER (Use this number on all continuation pages): 0840-01-984

9. CONSIGNEE - Name and Facility
Envirocare of Utah, Inc.
Clive Disposal Site (Bulk Waste Facility)
Interstate 80, Exit 49
Clive, UT 84029

L84892

CONTACT: Shipping and Receiving

TELEPHONE (Include Area Code): (435)884-0155

SIGNATURE – Authorized consignee acknowledging waste receipt

DATE: 6-3-05

10. CERTIFICATION

This is to certify that the herein-named materials are properly classified, described, packaged, marked, and labeled and are in proper condition for transportation according to the applicable regulations of the Department of Transportation. This also certifies that the materials are classified, packaged, marked, and labeled and are in proper condition for transportation and disposal as described in accordance with the requirements of 10 CFR Parts 20 and 61, or equivalent state regulations.

AUTHORIZED SIGNATURE | TITLE: Broker | DATE: 5-19-05

11. U.S. DEPARTMENT OF TRANSPORTATION DESCRIPTION (including proper shipping name, hazard class, UN ID number, and any additional information)	12. DOT LABEL "RADIOACTIVE"	13. TRANSPORT INDEX	14. PHYSICAL AND CHEMICAL FORM	15. INDIVIDUAL RADIONUCLIDES	16. TOTAL PACKAGE ACTIVITY MBq	mCi	17. LSA/SCO CLASS	18. TOTAL WEIGHT OR VOLUME (Use appropriate units)	19. IDENTIFICATION NUMBER OF PACKAGE
Soil,DOT Non-Regulated, containing Radionuclides	NA	NA	Solid / OXIDES	Ac-227 Pa-231 Ra-223 Ra-226 Ra-228 Th-227 Th-228 Th-230 Th-232 U-234 U-Nat	1.0551E+00	2.8517E-02	NA	21920 LBS; 173.33 FT3	9183
Soil,DOT Non-Regulated, containing Radionuclides	NA	NA	Solid / OXIDES	Ac-227 Pa-231 Ra-223 Ra-226 Ra-228 Th-227 Th-228 Th-230 Th-232 U-234 U-Nat	1.8279E+00	4.9402E-02	NA	18370 LBS; 145.16 FT3	9170
Soil,DOT Non-Regulated, containing Radionuclides	NA	NA	Solid / OXIDES	Ac-227 Pa-231 Ra-223 Ra-226 Ra-228 Th-227 Th-228 Th-230 Th-232 U-234 U-Nat	5.9143E+00	1.5985E-01	NA	17860 LBS; 141.11 FT3	9183

FOR CONSIGNEE USE ONLY

- ____ Record Waste Description Inadequate
- ____ Contamination or Leakage Detected
- ____ Unexpected Exposure Rates Detected
- ____ Labels, Markings, etc. Inadequate
- ____ Container Integrity Inadequate
- ____ Other
- ✓ No Violations Detected on this Shipment

20. TERMS AND CONDITIONS

A. HAZARDOUS MATERIALS: Generator represents & warrants that Waste Material __ is (or) ✓ is not a hazardous waste as defined in 40 CFR 261. Where the material is a hazardous waste, this shipment is also accompanied by a separate and completed hazardous waste manifest, along with the appropriate land-disposal restriction notice and/or certification as required by 40 CFR 268.1.

B. TITLE: Upon acceptance at the disposal site by Envirocare of Utah, Inc., and all appropriate regulatory authorities, title to the Waste Material which conforms to Generator's representations herein shall thereupon transfer from Generator and be vested in Envirocare of Utah, Inc.

C. WASTE MATERIAL: Generator represents and warrants that all data set forth in this (UNIFORM LOW-LEVEL RADIOACTIVE WASTE MANIFEST) are true and correct in all respects and in accordance with all applicable governmental laws, rules, regulations and Envirocare of Utah Inc.'s facility license.

D. INDEMNIFICATION: Generator agrees to indemnify Envirocare of Utah, Inc., its officers, employees and agents against all losses and liability whatsoever if such losses or liability results from the failure of the Waste Material to conform in all material respects to the data supplied on the (UNIFORM LOW-LEVEL RADIOACTIVE WASTE MANIFEST,) or if this shipment fails to meet the standards prescribed by the Department of Transportation or any governmental agency having jurisdiction over such matters.

FORM 540 (04-03)

FORM 540 — **Envirocare of Utah, Inc.**

UNIFORM LOW-LEVEL RADIOACTIVE WASTE MANIFEST

SHIPPING PAPER

1. EMERGENCY TELEPHONE NUMBER (Include Area Code): 1-800-424-9300

ORGANIZATION: Chemtrec

2. IS THIS AN "EXCLUSIVE USE" SHIPMENT? ☐ YES ☑ NO

3. TOTAL NUMBER OF PACKAGES IDENTIFIED ON THIS MANIFEST =====> 10

4. DOES EPA REGULATED WASTE REQUIRING A MANIFEST ACCOMPANY THIS SHIPMENT? ☐ YES ☑ NO
If "Yes," provide Manifest Number =====>

EPA MANIFEST NUMBER

5. SHIPPER -- NAME AND FACILITY
GTEOSI
140 Cantiague Rock RD
Hicksville, NY 11801

SHIPPER I.D. NUMBER: 0840-01-984
☐ COLLECTOR
☐ PROCESSOR

Utah Generator Site Access Permit No.: 020 500 1352
SHIPMENT NUMBER: NHRX-0766
☑ GENERATOR TYPE (Specify) I

CONTACT: Jean Agostinelli
TELEPHONE NUMBER (Include Area Code): 516-932-9157

6. CARRIER -- Name and Address
Priority Transport Services, Inc.
391 Anthony Street
Schenectady, NY 12308

EPA I.D. NUMBER: NYR000104976
SHIPPING DATE: 05/19/2005

CONTACT: Dispatch
TELEPHONE (Include Area Code): 800-235-0069

SIGNATURE -- Authorized carrier acknowledging waste receipt
DATE: 5-19-05

7. FORM 540 AND 540A — PAGE 1 OF 3 PAGE(S)
FORM 541 AND 541A — 5 PAGE(S)
FORM 542 AND 542A — None PAGE(S)
ADDITIONAL INFORMATION — None PAGE(S)

8. MANIFEST NUMBER (Use this number on all continuation pages): 0840-01-984

9. CONSIGNEE - Name and Facility
Envirocare of Utah, Inc.
Clive Disposal Site (Bulk Waste Facility)
Interstate 80, Exit 49
Clive, UT 84029

CONTACT: Shipping and Receiving
TELEPHONE (Include Area Code): (435)884-0155

SIGNATURE -- Authorized consignee acknowledging waste receipt
DATE

10. CERTIFICATION
This is to certify that the herein-named materials are properly classified, described, packaged, marked, and labeled and are in proper condition for transportation according to the applicable regulations of the Department of Transportation. This also certifies that the materials are classified, packaged, marked, and labeled and are in proper condition for transportation and disposal as described in accordance with the requirements of 10 CFR Parts 20 and 61, or equivalent state regulations.

AUTHORIZED SIGNATURE: [signature] — TITLE: Broker — DATE: 5-19-05

11. U.S. DEPARTMENT OF TRANSPORTATION DESCRIPTION (Including proper shipping name, hazard class, UN ID number, and any additional information)	12. DOT LABEL "RADIOACTIVE"	13. TRANSPORT INDEX	14. PHYSICAL AND CHEMICAL FORM	15. INDIVIDUAL RADIONUCLIDES	16. TOTAL PACKAGE ACTIVITY MBq	mCi	17. LSA/SCO CLASS	18. TOTAL WEIGHT OR VOLUME (Use appropriate units)	19. IDENTIFICATION NUMBER OF PACKAGE
Soil,DOT Non-Regulated, containing Radionuclides	NA	NA	Solid / OXIDES	Ac-227 Pa-231 Ra-223 Ra-226 Ra-228 Th-227 Th-228 Th-230	1.0551E+00	2.8517E-02	NA	21920 LBS; 173.33 FT3	9163
				Th-232 U-234 U-Nat					
Soil,DOT Non-Regulated, containing Radionuclides	NA	NA	Solid / OXIDES	Ac-227 Pa-231 Ra-223 Ra-226 Ra-228 Th-227 Th-228 Th-230	1.8279E+00	4.9402E-02	NA	18370 LBS; 145.16 FT3	9170
				Th-232 U-234 U-Nat					
Soil,DOT Non-Regulated, containing Radionuclides	NA	NA	Solid / OXIDES	Ac-227 Pa-231 Ra-223 Ra-226 Ra-228 Th-227 Th-228 Th-230	5.9143E+00	1.5985E-01	NA	17860 LBS; 141.11 FT3	9183
				Th-232 U-234 U-Nat					

FOR CONSIGNEE USE ONLY

____ Record Waste Description Inadequate
____ Contamination or Leakage Detected
____ Unexpected Exposure Rates Detected
____ Labels, Markings, etc. Inadequate
____ Container Integrity Inadequate
____ Other
____ No Violations Detected on this Shipment

20. TERMS AND CONDITIONS

A. HAZARDOUS MATERIALS: Generator represents & warrants that Waste Material __ is (or) ✓ is not a hazardous waste as defined in 40 CFR 261. Where the material is a hazardous waste, this shipment is also accompanied by a separate and completed hazardous waste manifest, along with the appropriate land-disposal restriction notice and/or certification as required by 40 CFR 268.1.

B. TITLE: Upon acceptance at the disposal site by Envirocare of Utah, Inc., and all appropriate regulatory authorities, title to the Waste Material which conforms to Generator's representations herein shall thereupon transfer from Generator and be vested in Envirocare of Utah, Inc.

C. WASTE MATERIAL: Generator represents and warrants that all data set forth in this (UNIFORM LOW-LEVEL RADIOACTIVE WASTE MANIFEST) are true and correct in all respects and in accordance with all applicable governmental laws, rules, regulations and Envirocare of Utah Inc.'s facility license.

D. INDEMNIFICATION: Generator agrees to indemnify Envirocare of Utah, Inc., its officers, employees and agents against all losses and liability whatsoever if such losses or liability results from the failure of the Waste Material to conform in all material respects to the data supplied on the (UNIFORM LOW-LEVEL RADIOACTIVE WASTE MANIFEST,) or if this shipment fails to meet the standards prescribed by the Department of Transportation or any governmental agency having jurisdiction over such matters.

FORM 540A

Envirocare of Utah, Inc.

UNIFORM LOW-LEVEL RADIOACTIVE WASTE MANIFEST

SHIPPING PAPER (CONTINUATION)

8. MANIFEST NUMBER
(Use this number on all continuation pages)
0840-01-984

11. U.S. DEPARTMENT OF TRANSPORTATION DESCRIPTION (Including proper shipping name, hazard class, UN ID number, and any additional information)	12. DOT LABEL "RADIOACTIVE"	13. TRANSPORT INDEX	14. PHYSICAL AND CHEMICAL FORM	15. INDIVIDUAL RADIONUCLIDES				16. TOTAL PACKAGE ACTIVITY MBq	mCi	17. LSA/SCO CLASS	18. TOTAL WEIGHT OR VOLUME (Use appropriate units)	19. IDENTIFICATION NUMBER OF PACKAGE
Soil,DOT Non-Regulated, containing Radionuclides	NA	NA	Solid / OXIDES	Ac-227	Pa-231	Ra-223	Ra-226	3.1064E+00	8.3957E-02	NA	17910 LBS; 141.51 FT3	9184
				Ra-228	Th-227	Th-228	Th-230					
				Th-232	U-234	U-Nat						
Soil,DOT Non-Regulated, containing Radionuclides	NA	NA	Solid / OXIDES	Ac-227	Pa-231	Ra-223	Ra-226	2.5594E+00	6.9174E-02	NA	18580 LBS; 146.83 FT3	9186
				Ra-228	Th-227	Th-228	Th-230					
				Th-232	U-234	U-Nat						
Soil,DOT Non-Regulated, containing Radionuclides	NA	NA	Solid / OXIDES	Ac-227	Pa-231	Ra-223	Ra-226	6.3483E-01	1.7158E-02	NA	11750 LBS; 92.62 FT3	9188
				Ra-228	Th-227	Th-228	Th-230					
				Th-232	U-234	U-Nat						
Soil,DOT Non-Regulated, containing Radionuclides	NA	NA	Solid / OXIDES	Ac-227	Pa-231	Ra-223	Ra-226	1.4769E+00	3.9915E-02	NA	18140 LBS; 143.33 FT3	9192
				Ra-228	Th-227	Th-228	Th-230					
				Th-232	U-234	U-Nat						
Soil,DOT Non-Regulated, containing Radionuclides	NA	NA	Solid / OXIDES	Ac-227	Pa-231	Ra-223	Ra-226	1.4454E+00	3.9064E-02	NA	15980 LBS; 126.19 FT3	9212
				Ra-228	Th-227	Th-228	Th-230					
				Th-232	U-234	U-Nat						
Soil,DOT Non-Regulated, containing Radionuclides	NA	NA	Solid / OXIDES	Ac-227	Pa-231	Ra-223	Ra-226	1.1841E+00	3.2003E-02	NA	19730 LBS; 155.95 FT3	9216
				Ra-228	Th-227	Th-228	Th-230					
				Th-232	U-234	U-Nat						
Soil,DOT Non-Regulated, containing Radionuclides	NA	NA	Solid / OXIDES	Ac-227	Pa-231	Ra-223	Ra-226	1.3242E+00	3.5790E-02	NA	17230 LBS; 136.11 FT3	9221
				Ra-228	Th-227	Th-228	Th-230					

FORM 540A

Envirocare of Utah, Inc.

UNIFORM LOW-LEVEL RADIOACTIVE WASTE MANIFEST

SHIPPING PAPER (CONTINUATION)

8. MANIFEST NUMBER
(Use this number on all continuation pages)
0840-01-984

11. U.S. DEPARTMENT OF TRANSPORTATION DESCRIPTION (Including proper shipping name, hazard class, UN ID number, and any additional information)	12. DOT LABEL "RADIOACTIVE"	13. TRANSPORT INDEX	14. PHYSICAL AND CHEMICAL FORM	15. INDIVIDUAL RADIONUCLIDES			16. TOTAL PACKAGE ACTIVITY MBq	mCi	17. LSA/SCO CLASS	18. TOTAL WEIGHT OR VOLUME (Use appropriate units)	19. IDENTIFICATION NUMBER OF PACKAGE
Soil,DOT Non-Regulated, containing Radionuclides	NA	NA	Solid / OXIDES	Th-232	U-234	U-Nat	1.3242E+00	3.5790E-02	NA	17230 LBS; 136.11 FT3	9221

FORM 540A (04-03)

FORM 541

Envirocare of Utah, Inc.

UNIFORM LOW-LEVEL RADIOACTIVE WASTE MANIFEST

CONTAINER AND WASTE DESCRIPTION

Additional Nuclear Regulatory Commission (NRC) Requirements for Control, Transfer and Disposal of Radioactive Waste

1. MANIFEST TOTALS

NUMBER OF PACKAGES/ DISPOSAL CONTAINERS	NET WASTE VOLUME	NET WASTE WEIGHT	SPECIAL NUCLEAR MATERIAL (grams) U-233	U-235	Pu	Total
10	m3 39.7043 ft3 1402.1400	kg 80136.1694 ton 88.3350	NP	NP	NP	NP

ACTIVITY	ALL NUCLIDES	TRITIUM	C-14	Tc-99	I-129	SOURCE (kg)	
MBq	1.9636E+01	NP	NP	NP	NP	(kg)	6.9898E-01
mCi	5.3071E-01	NP	NP	NP	NP	(tons)	7.7050E-04

2. MANIFEST NUMBER 0840-01-984

3. PAGE 1 OF 5 PAGE(S)

4. SHIPPER NAME GTEOSI

SHIPMENT ID NUMBER 0840-01-984

5. CONTAINER IDENTIFICATION NUMBER/ GENERATOR ID NUMBER(S)	6. CONTAINER DESCRIPTION (See Note 1 & Note 1A)	7. VOLUME (m3)/(ft3)	8. WASTE AND CONTAINER WEIGHT (kg)/(ton)	9. SURFACE RADIATION LEVEL (mSv/hr)/(mrem/hr)	10. SURFACE CONTAMINATION (MBq/100 cm2)/(dpm/100cm2) ALPHA	BETA-GAMMA	11. WASTE DESCRIPTOR (See Note 2 & Note 2A)	12. APPROXIMATE WASTE VOLUME(S) IN CONTAINER (m3)/(FT3)	13. SOLIDIFICATION OR STABILIZATION MEDIA (See Note 3)	14. CHEMICAL DESCRIPTION: CHEMICAL FORM/ CHELATING AGENT	WEIGHT % CHELATING AGENT IF > 0.1%	15. RADIOLOGICAL DESCRIPTION: RADIONUCLIDES	pCi/gm	MBq	mCi	16. WASTE CLASSIFICATION AS-Class A Stable AU-Class A Unstable B-Class B C-Class C
9163/GTEOSI	19 Strong Tight Container Loaded in Gondola	4.9082	9942.7454	0.0001	<3.6740E-06	<3.6740E-05	22,59-CONCRETE,59 -MISC DEBRIS-HJ	4.9082	100	OXIDES/NONE	0.00	Ac-227	4.63600E-02	1.7008E-02	4.5968E-04	AU
		173.3300	10.9600	0.0060	<2.2000E+02	<2.2000E+03		173.3300				Pa-231	3.13400E-01	1.1498E-01	3.1075E-03	
												Ra-223	3.39400E-02	(1.2452E-02)	(3.3653E-04)	
												Ra-226	1.07303E-01	3.9368E-02	1.0640E-03	
												Ra-228	1.65816E-01	6.0832E-02	1.6441E-03	
												Th-227 [1.4828E-14 kg]	4.63600E-02	1.7008E-02	4.5968E-04	
												Th-228 [4.0509E-12 kg]	3.35013E-01	1.2291E-01	3.3218E-03	
												Th-230 [4.0955E-08 kg]	8.67397E-02	3.1822E-02	8.6006E-04	
												Th-232 [1.4947E-02 kg]	1.65816E-01	6.0832E-02	1.6441E-03	
												U-234 [9.2806E-07 kg]	5.80306E-01	2.1289E-01	5.7539E-03	
												U-Nat [1.3895E-02 kg]	9.94964E-01	3.6502E-01	9.8654E-03	
												Subtotal		1.0427E+00	2.8180E-02	
												Total		1.0427E+00	2.8180E-02	
												Source [2.8843E-02 kg]				
9170/GTEOSI	19 Strong Tight Container Loaded in Gondola	4.1105	8332.4924	0.0001	<3.6740E-06	<3.6740E-05	22,59-CONCRETE,59 -MISC DEBRIS-HJ	4.1105	100	OXIDES/NONE	0.00	Ac-227	4.39000E-02	(1.3488E-02)	(3.6453E-04)	AU
		145.1600	9.1850	0.0120	<2.2000E+02	<2.2000E+03		145.1600				Pa-231	1.94500E-01	5.9759E-02	1.6151E-03	
												Ra-223	5.28400E-02	(1.6234E-02)	(4.3877E-04)	
												Ra-226	1.82807E-01	5.6166E-02	1.5180E-03	
												Ra-228	4.23262E-01	1.3004E-01	3.5146E-03	
												Th-227 [1.1759E-14 kg]	4.39000E-02	(1.3488E-02)	(3.6453E-04)	
												Th-228 [4.9909E-12 kg]	4.92857E-01	1.5142E-01	4.0925E-03	
												Th-230 [8.7549E-08 kg]	2.21413E-01	6.8025E-02	1.8385E-03	
												Th-232 [3.1951E-02 kg]	4.23262E-01	1.3004E-01	3.5146E-03	

Note 1: Container Description Codes. For containers/ waste requiring disposal in approved structural over-packs the numerical code must be followed by "-OP."

1. Wooden Box or Crate
2. Metal Box
3. Plastic Drum or Pail
4. Metal Drum or Pail
5. Metal Tank or Liner
6. Concrete Tank or Liner
7. Polyethlene Tank or Liner
8. Fiberglass Tank or Liner
9. Demineralizer
10. Gas Cylinder
11. Bulk, Unpackaged Waste
12. Unpackaged Components
13. High Integrity Container
19. Other. Describe in Item 6, or additional page

Note 1A: Bulk Packaging Description Codes. (Choose one code as may be applicable.)

A Gondola
B Intermodal
C End-Dump
D Roll-off
E Seavan

NOTE 2: Waste Descriptor Codes. (Choose up to three which predominate by volume.)

20. Charcoal
21. Incinerator Ash
22. Soil
23. Gas
24. Oil
25. Aqueous Liquid
26. Filter Media
27. Mechanical Filter
28. EPA or State Hazardous
29. Demolition Rubble
30. Cation Ion-exchange Media
31. Anion Ion-exchange Media
32. Mixed Bed Ion-exchange Media
33. Contaminated Equipment
34. Organic Liquid (except oil)
35. Glassware or Labware
36. Sealed Source/Device
37. Paint or Plating
38. Evaporator Bottoms/Sludges/ Concentrates
39. Compactible Trash
40. Noncompactible Trash
41. Animal Carcass
42. Biological Material (except animal carcass)
43. Activated Material
59. Other. Describe in item 11, or additional page

NOTE 2A: Specific Waste Descriptions (Choose all applicable codes.)

G Dewatered
H Solid
I Combustible
J Non-combustible
K Air Filtration Filters
L Asbestos

Note3: Solidification and Stabilization Media Codes. (Choose up to three which predominate by volume.) For media meeting disposal site structural stability requirements, the numerical code must be followed by "-S." and the media vendor and brand name must also be identified in Item 13. Code 100=NONE REQUIRED.

Solidification

90. Cement
91. Concrete (encapsulation)
92. Bitumen
93. Vinyl Chloride
94. Vinyl Ester Styrene
99. Other. Describe in item 13, or additional page
100. None Required.

FORM 541A

UNIFORM LOW-LEVEL RADIOACTIVE WASTE MANIFEST

CONTAINER AND WASTE DESCRIPTION (CONTINUATION)

Envirocare of Utah, Inc.

2. MANIFEST NUMBER 0840-01-984

DISPOSAL CONTAINER DESCRIPTION							WASTE DESCRIPTION FOR EACH WASTE TYPE IN CONTAINER									
							PHYSICAL DESCRIPTION			14. CHEMICAL DESCRIPTION		15. RADIOLOGICAL DESCRIPTION				16. WASTE CLASSIFICATION AS-Class A Stable AU-Class A Unstable B-Class B C-Class C
5. CONTAINER IDENTIFICATION NUMBER/ GENERATOR ID NUMBER(S)	6. CONTAINER DESCRIPTION (See Note 1 & Note 1A)	7. VOLUME (m3) / (ft3)	8. WASTE AND CONTAINER WEIGHT (kg) / (ton)	9. SURFACE RADIATION LEVEL (mSv/hr) / (mrem/hr)	10. SURFACE CONTAMINATION (MBq/100 cm2) / (dpm/100cm2) ALPHA	BETA-GAMMA	11. WASTE DESCRIPTOR (See Note 2 & Note 2A)	12. APPROXIMATE WASTE VOLUME(S) IN CONTAINER (m3) / (FT3)	13. SOLIDIFICATION OR STABILIZATION MEDIA (See Note 3)	CHEMICAL FORM/ CHELATING AGENT	WEIGHT % CHELATING AGENT IF > 0.1%	INDIVIDUAL RADIONUCLIDES AND ACTIVITY (MBq) AND CONTAINER TOTAL; OR CONTAINER TOTAL ACTIVITY AND RADIONUCLIDE PERCENT: RADIONUCLIDES	pCi/gm	MBq	mCi	
												U-234 [1.8577E-06 kg]	1.38705E+00	4.2617E-01	1.1518E-02	
												U-Nat [2.9047E-02 kg]	2.48363E+00	7.6305E-01	2.0623E-02	
												Subtotal		1.7847E+00	4.8234E-02	
												Total		1.7847E+00	4.8234E-02	
												Source [6.1000E-02 kg]				
9183/GTEOSI	19 Strong Tight Container Loaded in Gondola	3.9958	8101.1603	0.0001	<3.6740E-06	<3.6740E-05	22,59-CONCRETE,59 -MISC DEBRIS-HJ	3.9958	100	OXIDES/NONE	0.00	Ac-227	5.65100E-02	(1.6878E-02)	(4.5616E-04)	AU
												Pa-231	4.03600E-01	1.2054E-01	3.2579E-03	
												Ra-223	8.45600E-02	2.5255E-02	6.8258E-04	
		141.1100	8.9300	0.0070	<2.2000E+02	<2.2000E+03		141.1100				Ra-226	2.66224E-01	7.9513E-02	2.1490E-03	
												Ra-228	7.73191E-01	2.3093E-01	6.2413E-03	
												Th-227 [1.4715E-14 kg]	5.65100E-02	(1.6878E-02)	(4.5616E-04)	
												Th-228 [7.8118E-12 kg]	7.93556E-01	2.3701E-01	6.4057E-03	
												Th-230 [1.5547E-07 kg]	4.04464E-01	1.2080E-01	3.2649E-03	
												Th-232 [5.6739E-02 kg]	7.73191E-01	2.3093E-01	6.2413E-03	
												U-234 [8.0502E-06 kg]	6.18312E+00	1.8467E+00	4.9911E-02	
												U-Nat [1.1377E-01 kg]	1.00073E+01	2.9889E+00	8.0780E-02	
												Subtotal		5.8806E+00	1.5893E-01	
												Total		5.8806E+00	1.5893E-01	
												Source [1.7052E-01 kg]				
9184/GTEOSI	19 Strong Tight Container Loaded in Gondola	4.0071	8123.8399	0.0001	<3.6740E-06	<3.6740E-05	22,59-CONCRETE,59 -MISC DEBRIS-HJ	4.0071	100	OXIDES/NONE	0.00	Ac-227	8.38400E-02	(2.5111E-02)	(6.7867E-04)	AU
												Pa-231	3.76700E-01	1.1282E-01	3.0493E-03	
												Ra-223	5.71400E-02	(1.7114E-02)	(4.6254E-04)	
		141.5100	8.9550	0.0080	<2.2000E+02	<2.2000E+03		141.5100				Ra-226	3.02960E-01	9.0739E-02	2.4524E-03	
												Ra-228	8.64113E-01	2.5881E-01	6.9948E-03	
												Th-227 [2.1893E-14 kg]	8.38400E-02	(2.5111E-02)	(6.7867E-04)	
												Th-228 [9.2404E-12 kg]	9.36050E-01	2.8036E-01	7.5772E-03	
												Th-230 [1.7424E-07 kg]	4.52026E-01	1.3539E-01	3.6591E-03	
												Th-232 [6.3590E-02 kg]	8.64113E-01	2.5881E-01	6.9948E-03	
												U-234 [3.0631E-06 kg]	2.34609E+00	7.0267E-01	1.8991E-02	
												U-Nat [4.5659E-02 kg]	4.00476E+00	1.1995E+00	3.2418E-02	
												Subtotal		3.0391E+00	8.2137E-02	
												Total		3.0391E+00	8.2137E-02	

FORM 541A

UNIFORM LOW-LEVEL RADIOACTIVE WASTE MANIFEST

CONTAINER AND WASTE DESCRIPTION (CONTINUATION)

Envirocare of Utah, Inc.

2. MANIFEST NUMBER 0840-01-984

DISPOSAL CONTAINER DESCRIPTION							WASTE DESCRIPTION FOR EACH WASTE TYPE IN CONTAINER									
							PHYSICAL DESCRIPTION			14. CHEMICAL DESCRIPTION		15. RADIOLOGICAL DESCRIPTION				16. WASTE CLASSIFICATION AS-Class A Stable AU-Class A Unstable B-Class B C-Class C
5. CONTAINER IDENTIFICATION NUMBER/ GENERATOR ID NUMBER(S)	6. CONTAINER DESCRIPTION (See Note 1 & Note 1A)	7. VOLUME (m3)/(ft3)	8. WASTE AND CONTAINER WEIGHT (kg)/(ton)	9. SURFACE RADIATION LEVEL (mSv/hr)/(mrem/hr)	10. SURFACE CONTAMINATION (MBq/100 cm2)/(dpm/100cm2) ALPHA	BETA-GAMMA	11. WASTE DESCRIPTOR (See Note 2 & Note 2A)	12. APPROXIMATE WASTE VOLUME(S) IN CONTAINER (m3)/(FT3)	13. SOLIDIFICATION OR STABILIZATION MEDIA (See Note 3)	CHEMICAL FORM/ CHELATING AGENT	WEIGHT % CHELATING AGENT IF > 0.1%	INDIVIDUAL RADIONUCLIDES AND ACTIVITY (MBq) AND CONTAINER TOTAL; OR CONTAINER TOTAL ACTIVITY AND RADIONUCLIDE PERCENT: RADIONUCLIDES	pCi/gm	MBq	mCi	
												Source [1.0925E-01 kg]				
9186/GTEOSI	19 Strong Tight Container Loaded in Gondola	4.1578	8427.7468	0.0001	<3.6740E-06	<3.6740E-05	22,59-CONCRETE,59 -MISC DEBRIS-HJ	4.1578	100	OXIDES/NONE	0.00	Ac-227	6.76500E-02	(2.1023E-02)	(5.6819E-04)	AU
												Pa-231	3.30000E-01	(1.0255E-01)	(2.7717E-03)	
												Ra-223	5.96200E-02	(1.8528E-02)	(5.0075E-04)	
		146.8300	9.2900	0.0070	<2.2000E+02	<2.2000E+03		146.8300				Ra-226	3.68155E-01	1.1441E-01	3.0921E-03	
												Ra-228	1.09702E+00	3.4091E-01	9.2139E-03	
												Th-227 [1.8329E-14 kg]	6.76500E-02	(2.1023E-02)	(5.6819E-04)	
												Th-228 [1.2527E-11 kg]	1.22302E+00	3.8006E-01	1.0272E-02	
												Th-230 [2.2952E-07 kg]	5.73862E-01	1.7834E-01	4.8199E-03	
												Th-232 [8.3763E-02 kg]	1.09702E+00	3.4091E-01	9.2139E-03	
												U-234 [1.5290E-06 kg]	1.12864E+00	3.5074E-01	9.4795E-03	
												U-Nat [2.6301E-02 kg]	2.22332E+00	6.9094E-01	1.8674E-02	
												Subtotal		2.3963E+00	6.4765E-02	
												Total		2.3963E+00	6.4765E-02	
												Source [1.1007E-01 kg]				
9188/GTEOSI	19 Strong Tight Container Loaded in Gondola	2.6227	5329.7107	0.0001	<3.6740E-06	<3.6740E-05	22,59-CONCRETE,59 -MISC DEBRIS-HJ	2.6227	100	OXIDES/NONE	0.00	Ac-227	1.05600E-01	2.0701E-02	5.5949E-04	AU
												Pa-231	2.63900E-01	(5.1733E-02)	(1.3982E-03)	
												Ra-223	4.48400E-02	(8.7901E-03)	(2.3757E-04)	
		92.6200	5.8750	0.0050	<2.2000E+02	<2.2000E+03		92.6200				Ra-226	1.64366E-01	3.2221E-02	8.7084E-04	
												Ra-228	3.73901E-01	7.3297E-02	1.9810E-03	
												Th-227 [1.8048E-14 kg]	1.05600E-01	2.0701E-02	5.5949E-04	
												Th-228 [2.8215E-12 kg]	4.36691E-01	8.5607E-02	2.3137E-03	
												Th-230 [4.9347E-08 kg]	1.95591E-01	3.8343E-02	1.0363E-03	
												Th-232 [1.8009E-02 kg]	3.73901E-01	7.3297E-02	1.9810E-03	
												U-234 [3.1560E-07 kg]	3.69318E-01	(7.2398E-02)	(1.9567E-03)	
												U-Nat [6.0047E-03 kg]	8.04674E-01	1.5774E-01	4.2633E-03	
												Subtotal		5.0191E-01	1.3565E-02	
												Total		5.0191E-01	1.3565E-02	
												Source [2.4014E-02 kg]				

FORM 541A

UNIFORM LOW-LEVEL RADIOACTIVE WASTE MANIFEST

CONTAINER AND WASTE DESCRIPTION (CONTINUATION)

Envirocare of Utah, Inc.

2. MANIFEST NUMBER 0840-01-984

DISPOSAL CONTAINER DESCRIPTION							WASTE DESCRIPTION FOR EACH WASTE TYPE IN CONTAINER									
							PHYSICAL DESCRIPTION			14. CHEMICAL DESCRIPTION		15. RADIOLOGICAL DESCRIPTION				16. WASTE CLASSIFICATION AS-Class A Stable AU-Class A Unstable B-Class B C-Class C
5. CONTAINER IDENTIFICATION NUMBER/ GENERATOR ID NUMBER(S)	6. CONTAINER DESCRIPTION (See Note 1 & Note 1A)	7. VOLUME (m3)/(ft3)	8. WASTE AND CONTAINER WEIGHT (kg)/(ton)	9. SURFACE RADIATION LEVEL (mSv/hr)/(mrem/hr)	10. SURFACE CONTAMINATION (MBq/100 cm2)/(dpm/100cm2) ALPHA	BETA-GAMMA	11. WASTE DESCRIPTOR (See Note 2 & Note 2A)	12. APPROXIMATE WASTE VOLUME(S) IN CONTAINER (m3)/(FT3)	13. SOLIDIFICATION OR STABILIZATION MEDIA (See Note 3)	CHEMICAL FORM/ CHELATING AGENT	WEIGHT % CHELATING AGENT IF > 0.1%	INDIVIDUAL RADIONUCLIDES AND ACTIVITY (MBq) AND CONTAINER TOTAL; OR CONTAINER TOTAL ACTIVITY AND RADIONUCLIDE PERCENT: RADIONUCLIDES	pCi/gm	MBq	mCi	
9192/GTEOSI	19 Strong Tight Container Loaded in Gondola	4.0587	8228.1661	0.0001	<3.6740E-06	<3.6740E-05	22,59-CONCRETE,59 -MISC DEBRIS-HJ	4.0587	100	OXIDES/NONE	0.00	Ac-227	1.23000E-01	3.7315E-02	1.0085E-03	AU
		143.3300	9.0700	0.0080	<2.2000E+02	<2.2000E+03		143.3300				Pa-231	1.61100E-01	(4.8873E-02)	(1.3209E-03)	
												Ra-223	5.53500E-02	(1.6792E-02)	(4.5383E-04)	
												Ra-226	2.00666E-01	6.0876E-02	1.6453E-03	
												Ra-228	6.56312E-01	1.9911E-01	5.3813E-03	
												Th-227 [3.2533E-14 kg]	1.23000E-01	3.7315E-02	1.0085E-03	
												Th-228 [6.2373E-12 kg]	6.23792E-01	1.8924E-01	5.1146E-03	
												Th-230 [1.3405E-07 kg]	3.43323E-01	1.0416E-01	2.8150E-03	
												Th-232 [4.8921E-02 kg]	6.56312E-01	1.9911E-01	5.3813E-03	
												U-234 [7.8446E-07 kg]	5.93182E-01	(1.7995E-01)	(4.8636E-03)	
												U-Nat [1.5383E-02 kg]	1.33209E+00	4.0411E-01	1.0922E-02	
												Subtotal		1.2312E+00	3.3277E-02	
												Total		1.2312E+00	3.3277E-02	
												Source [6.4305E-02 kg]				
9212/GTEOSI	19 Strong Tight Container Loaded in Gondola	3.5733	7248.4066	0.0001	<3.6740E-06	<3.6740E-05	22,59-CONCRETE,59 -MISC DEBRIS-HJ	3.5733	100	OXIDES/NONE	0.00	Ac-227	4.31600E-02	(1.1528E-02)	(3.1156E-04)	AU
		126.1900	7.9900	0.0080	<2.2000E+02	<2.2000E+03		126.1900				Pa-231	2.65500E-01	(7.0911E-02)	(1.9165E-03)	
												Ra-223	4.99500E-02	(1.3341E-02)	(3.6057E-04)	
												Ra-226	1.75474E-01	4.6868E-02	1.2667E-03	
												Ra-228	4.49787E-01	1.2013E-01	3.2468E-03	
												Th-227 [1.0050E-14 kg]	4.31600E-02	(1.1528E-02)	(3.1156E-04)	
												Th-228 [6.0160E-12 kg]	6.83390E-01	1.8252E-01	4.9331E-03	
												Th-230 [8.0879E-08 kg]	2.35288E-01	6.2845E-02	1.6985E-03	
												Th-232 [2.9517E-02 kg]	4.49787E-01	1.2013E-01	3.2468E-03	
												U-234 [1.3006E-06 kg]	1.11710E+00	2.9836E-01	8.0639E-03	
												U-Nat [1.9307E-02 kg]	1.89899E+00	5.0720E-01	1.3708E-02	
												Subtotal		1.3381E+00	3.6164E-02	
												Total		1.3381E+00	3.6164E-02	
												Source [4.8825E-02 kg]				
9216/GTEOSI	19 Strong Tight Container Loaded in Gondola	4.4160	8949.3781	0.0001	<3.6740E-06	<3.6740E-05	22,59-CONCRETE,59 -MISC DEBRIS-HJ	4.4160	100	OXIDES/NONE	0.00	Ac-227	3.34800E-02	(1.1051E-02)	(2.9868E-04)	AU
		155.9500	9.8650	0.0060	<2.2000E+02	<2.2000E+03		155.9500				Pa-231	3.15300E-01	1.0407E-01	2.8128E-03	
												Ra-223	3.33900E-02	(1.1022E-02)	(2.9788E-04)	
												Ra-226	1.24872E-01	4.1218E-02	1.1140E-03	
												Ra-228	2.26383E-01	7.4725E-02	2.0196E-03	

FORM 541A

UNIFORM LOW-LEVEL RADIOACTIVE WASTE MANIFEST

CONTAINER AND WASTE DESCRIPTION (CONTINUATION)

Envirocare of Utah, Inc.

2. MANIFEST NUMBER 0840-01-984

DISPOSAL CONTAINER DESCRIPTION							WASTE DESCRIPTION FOR EACH WASTE TYPE IN CONTAINER									
							PHYSICAL DESCRIPTION			14. CHEMICAL DESCRIPTION		15. RADIOLOGICAL DESCRIPTION				16. WASTE CLASSIFICATION AS-Class A Stable AU-Class A Unstable B-Class B C-Class C
5. CONTAINER IDENTIFICATION NUMBER/ GENERATOR ID NUMBER(S)	6. CONTAINER DESCRIPTION (See Note 1 & Note 1A)	7. VOLUME (m3)/(ft3)	8. WASTE AND CONTAINER WEIGHT (kg)/(ton)	9. SURFACE RADIATION LEVEL (mSv/hr)/(mrem/hr)	10. SURFACE CONTAMINATION (MBq/100 cm2)/(dpm/100cm2) ALPHA	BETA-GAMMA	11. WASTE DESCRIPTOR (See Note 2 & Note 2A)	12. APPROXIMATE WASTE VOLUME(S) IN CONTAINER (m3)/(FT3)	13. SOLIDIFICATION OR STABILIZATION MEDIA (See Note 3)	CHEMICAL FORM/ CHELATING AGENT	WEIGHT % CHELATING AGENT IF > 0.1%	INDIVIDUAL RADIONUCLIDES AND ACTIVITY (MBq) AND CONTAINER TOTAL; OR CONTAINER TOTAL ACTIVITY AND RADIONUCLIDE PERCENT: RADIONUCLIDES	pCi/gm	MBq	mCi	
												Th-227 [9.6348E-15 kg]	3.34800E-02	(1.1051E-02)	(2.9868E-04)	
												Th-228 [3.3009E-12 kg]	3.03408E-01	1.0015E-01	2.7067E-03	
												Th-230 [5.0308E-08 kg]	1.18423E-01	3.9091E-02	1.0565E-03	
												Th-232 [1.8360E-02 kg]	2.26383E-01	7.4725E-02	2.0196E-03	
												U-234 [1.0927E-06 kg]	7.59415E-01	2.5067E-01	6.7748E-03	
												U-Nat [1.7751E-02 kg]	1.41276E+00	4.6631E-01	1.2603E-02	
												Subtotal		1.1510E+00	3.1107E-02	
												Total		1.1510E+00	3.1107E-02	
												Source [3.6112E-02 kg]				
9221/GTEOSI	19 Strong Tight Container Loaded in Gondola	3.8542	7815.3971	0.0001	<3.6740E-06	<3.6740E-05	22,59-CONCRETE,59 -MISC DEBRIS-HJ	3.8542	100	OXIDES/NONE	0.00	Ac-227	5.91200E-02	1.7031E-02	4.6031E-04	AU
												Pa-231	1.62900E-01	(4.6931E-02)	(1.2684E-03)	
												Ra-223	2.25900E-02	(6.5079E-03)	(1.7589E-04)	
		136.1100	8.6150	0.0060	<2.2000E+02	<2.2000E+03		136.1100				Ra-226	1.22186E-01	3.5200E-02	9.5135E-04	
												Ra-228	3.81702E-01	1.0996E-01	2.9720E-03	
												Th-227 [1.4849E-14 kg]	5.91200E-02	1.7031E-02	4.6031E-04	
												Th-228 [4.5718E-12 kg]	4.81479E-01	1.3871E-01	3.7489E-03	
												Th-230 [7.4032E-08 kg]	1.99672E-01	5.7524E-02	1.5547E-03	
												Th-232 [2.7018E-02 kg]	3.81702E-01	1.0996E-01	2.9720E-03	
												U-234 [1.2445E-06 kg]	9.91005E-01	2.8550E-01	7.7161E-03	
												U-Nat [1.9028E-02 kg]	1.73514E+00	4.9987E-01	1.3510E-02	
												Subtotal		1.2708E+00	3.4346E-02	
												Total		1.2708E+00	3.4346E-02	
												Source [4.6047E-02 kg]				
Shipment Totals		39.7043	80499.0434									Source [6.9898E-01 kg]		1.9636E+01	5.3071E-01	
		1402.1400	88.7350													

Envirocare of Utah, Inc.

ADDITIONAL NOTES

Manifest Number
0840-01-984
PAGE 1

New York State Waste Transporter Part 364 permit No. 4A-288
New York State Waste Transporter Part 381 permit Number 4A-288

UNIFORM LOW-LEVEL RADIOACTIVE WASTE MANIFEST
ISOTOPES REPORT

For Manifest # 0840-01-984
Envirocare of Utah, Inc.

	Total Activity		
Isotope	**(MBq)**	**(mCi)**	**(Ci)**
Ac-227	1.9113E-01	5.1658E-03	5.1658E-06
Pa-231	8.3317E-01	2.2518E-02	2.2518E-05
Ra-223	1.4603E-01	3.9469E-03	3.9469E-06
Ra-226	5.9657E-01	1.6124E-02	1.6124E-05
Ra-228	1.5987E+00	4.3209E-02	4.3209E-05
Th-227	1.9113E-01	5.1658E-03	5.1658E-06
Th-228	1.8680E+00	5.0486E-02	5.0486E-05
Th-230	8.3632E-01	2.2603E-02	2.2603E-05
Th-232	1.5987E+00	4.3209E-02	4.3209E-05
U-234	4.6260E+00	1.2503E-01	1.2503E-04
U-Nat	8.0426E+00	2.1737E-01	2.1737E-04

ENVIROCARE *OF UTAH, LLC.*

THE SAFE ALTERNATIVE

CERTIFICATE OF DISPOSAL

GTE Operations Support Inc., Irving

This Certificate acknowledges that the following manifested shipments:

Shipment	Disposal Location	Date	Shipment	Disposal Location	Date
0840-01-0977	Class A	06/10/05 11:58:51	0840-01-0981	Class A	06/10/05 11:34:19
0840-01-0982	Class A	06/10/05 11:58:51	0840-01-0983	Class A	06/10/05 11:34:19
0840-01-0984	Class A	06/10/05 10:04:57	0840-01-0985	Class A	06/10/05 10:04:57
0840-01-0986	Class A	06/10/05 11:34:19	0840-04-0029	Class A	06/10/05 11:58:51

Representing 9,190.86 cubic feet of waste has been disposed of at the above listed Disposal Facility. Disposal is subject to Envirocare's Radioactive Material License, all other applicable licenses, permits and regulations, and the Disposal Agreement.

Brent Anderson
Director of LLRW Operations

6/14/05
Date

605 N. 5600 W, Salt Lake City, Utah 84116 Telephone (801) 532-1330

Shipment Survey

Survey Number: GTEOSI-05-00329 Date: 4-21-05 Time: 10:53

Waste Container Type: (Super Sack) Intermodal Other: Soil

Waste Container ID #: 9188 Storage Bin: — Gross Weight: 11,750 lbs

	Ludlum 3030		Ludlum 3030		Ludlum 3030		Ludlum MoD. 19
Serial #	190646		196165				193615
Probe #	N/A		N/A				N/A
Calibration Due Date:	13 Dec 05		18 July 05				29 Mar 06
	α	β	α	β	α	β	
Background	0 cpm	25 cpm	0 cpm	25 cpm	N/A cpm	cpm	5 μR/hr
Efficiency	29 %	25 %	29 %	25 %	%	%	
MDA	25 dpm	130 dpm	25 dpm	130 dpm	dpm	dpm	

Maximum Contact Dose Rate .005 mrem/hr Transport Index: 0.0 mrem/hr

	α cpm	α dpm/100 cm2	β cpm	β dpm/100 cm2
ALARA Limit	N/A	60	N/A	500
Smear #				
1	0	LMDA	37	LMDA
2	0		20	
3	0		36	
4	0		24	
5	0		26	
6	0	LMDA	28	LMDA

Smear Locations: 1 - Bottom 2 - Front 3 - Right Side 4 - Back 5 - Left Side 6 - Top

George Economos — Surveyor Name

George Economos — Surveyor Signature

Supervisor Approval

4-21-05 10:53 Bag# 9188
11750 lb GR
042105 1053 9188 0011750

BagNum	MANIFEST GROSS WEIGHT
9212	15980

Shipment Survey

Survey Number: GTEOSI-05-00319 Date: 3-17-05 Time: 1234

Waste Container Type: Super Sack Intermodal Other: WASTE

Waste Container ID #: 9212 Storage Bin: 37 Gross Weight: 15980 lbs

	Ludlum 3030		Ludlum 3030		Ludlum 3030		L-19
Serial #	190646		196165		N		196117
Probe #	N/A		N/A				N/A
Calibration Due Date:	12-13-05		7-18-05				8-10-05
	α	β	α	β	α	β	
Background	0 cpm	25 cpm	0 cpm	25 cpm	cpm	cpm	5 μR/hr
Efficiency	29 %	25 %	29 %	25 %	%	%	
MDA	25 dpm	130 dpm	25 dpm	130 dpm	dpm	A dpm	

Maximum Contact Dose Rate: .008 mrem/hr Transport Index: 0 mrem/hr

	α cpm	α dpm/100 cm2	β cpm	β dpm/100 cm2
ALARA Limit	N/A	60	N/A	500
Smear #				
1	0	<MDA	29	<MDA
2	0		26	
3	0		30	
4	1		22	
5	0		22	
6	0		41	

Smear Locations: 1 - Bottom 2 - Front 3 - Right Side 4 - Back 5 - Left Side 6 - Top

JOHN MITCHELL, SR
Surveyor Name

Surveyor Signature

George Simons
Supervisor Approval

24991-S-SHEET9212-99.9
Date: 01/27/05 Time:1705

3-17-05 12:34 Bag# 9212
15980 lb GR
031705 1234 9212 0015980

BagNum	MANIFEST GROSS WEIGHT
9216	19730

Shipment Survey

GTEOSI-
Survey Number: 05- 00320 Date: 3-17-05 Time: 1216

Waste Container Type: Super Sack Intermodal Other: WASTE

Waste Container ID #: 9216 Storage Bin: 37 Gross Weight: 19730 lbs

	Ludlum 3030		Ludlum 3030		Ludlum 3030		L-19
Serial #	190646		196165		N		196117
Probe #	N/A		N/A				N/A
Calibration Due Date:	12-13-05		7-18-05				8-10-05
	α	β	α	β	α	β	
Background	0 cpm	25 cpm	0 cpm	25 cpm	cpm	cpm	5 μR/hr
Efficiency	29 %	25 %	29 %	25 %	%	%	
MDA	25 dpm	130 dpm	25 dpm	130 dpm	dpm	A dpm	

Maximum Contact Dose Rate: .006 mrem/hr Transport Index: 0 mrem/hr

	α cpm	α dpm/100 cm2	β cpm	β dpm/100 cm2
ALARA Limit	N/A	60	N/A	500
Smear #				
1	0	<MDA	27	<MDA
2	0		32	
3	0		24	
4	0		29	
5	0		21	
6	0		22	

Smear Locations: 1 - Bottom 2 - Front 3 - Right Side 4 - Back 5 - Left Side 6 - Top

JOHN MITCHELL, SR
Surveyor Name

John Mitchell, Sr
Surveyor Signature

George Evanson
Supervisor Approval

25836-S-XXF189216-99.9
Date: 02/08/05 Time: 1624

3-17-05 12:16 Bag# 9216
19730 lb GR
031705 1216 9216 0019730

BagNum	MANIFEST GROSS WEIGHT
9221	17230

Shipment Survey

GTGOSI-
Survey Number: 05-00322 Date: 3-17-05 Time: 1153

Waste Container Type: (Super Sack) Intermodal Other: WASTE

Waste Container ID #: 9221 Storage Bin: 36 Gross Weight: 17230 lbs

	Ludlum 3030		Ludlum 3030		Ludlum 3030		L-19
Serial #	190646		196165		N		196117
Probe #	N/A		N/A				N/A
Calibration Due Date:	12-13-05		7-18-05				8-10-05
	α	β	α	β	α	β	
Background	0 cpm	25 cpm	0 cpm	25 cpm	cpm	cpm	5 μR/hr
Efficiency	29 %	25 %	29 %	25 %	%	%	
MDA	25 dpm	130 dpm	25 dpm	130 dpm	dpm	A dpm	

Maximum Contact Dose Rate: .006 mrem/hr Transport Index: 0 mrem/hr

	α cpm	α dpm/100 cm2	β cpm	β dpm/100 cm2
ALARA Limit	N/A	60	N/A	500
Smear #				
1	0	<MDA	43	<MDA
2	0		36	
3	0		32	
4	0		21	
5	0		37	
6	1		14	

Smear Locations: 1 - Bottom 2 - Front 3 - Right Side 4 - Back 5 - Left Side 6 - Top

JOHN MITCHELL, SR
Surveyor Name

Surveyor Signature

George Lionoms
Supervisor Approval

27391-S-02V089221-99.9
Date: 03/01/05 Time:1538

3-17-05 11:53 Bag# 9221
17230 lb GR
031705 1153 9221 0017230

NYSDEC:V00089-1; URS27010-039

BagNum	MANIFEST GROSS WEIGHT
9186	18580

Shipment Survey

Survey Number: GTEOSI-04-10510 Date: 12-13-04 Time: 1120

Waste Container Type: Super Sack Intermodal Other: 5011

Waste Container ID #: 9186 Storage Bin: 47 Gross Weight: 18580 lbs

	Ludlum 3030		Ludlum 3030		Ludlum 3030		Ludlum 19
Serial #	190641		191265		N		193615
Probe #	N/A		N/A				N/A
Calibration Due Date:	3-4-05		4-20-05			A	5-19-05
	α	β	α	β	α	β	
Background	0 cpm	25 cpm	0 cpm	25 cpm	N cpm	cpm	6 μR/hr
Efficiency	29 %	25 %	29 %	25 %	%	%	
MDA	25 dpm	130 dpm	25 dpm	130 dpm	dpm	A dpm	

Maximum Contact Dose Rate: .007 mrem/hr Transport Index: 0 mrem/hr

	α cpm	α dpm/100 cm2	β cpm	β dpm/100 cm2
ALARA Limit	N/A	60	N/A	500
Smear #				
1	0	<MDA	20	<MDA
2	0		31	
3	0		34	
4	0		27	
5	0		30	
6	0		28	

Smear Locations: 1 - Bottom 2 - Front 3 - Right Side 4 - Back 5 - Left Side 6 - Top

DEBRA LePage — Debra L Page

Surveyor Name — Surveyor Signature

George Economos

Supervisor Approval

22976-S-DRP099186-05.0

Date: 12/13/04 Time:1612

1-05-05 9:04 Bag# 9186

18580 lb GR

010505 0904 9186 0018580

BagNum	MANIFEST GROSS WEIGHT
9184	17910

Shipment Survey

Survey Number: GTEDSI-04-10508 Date: 12-13-04 Time: 1049

Waste Container Type: Super Sack Intermodal Other: 9011

Waste Container ID #: 9184 Storage Bin: 47 Gross Weight: 17910 lbs

	Ludlum 3030		Ludlum 3030		Ludlum 3030		Ludlum 19
Serial #	190641		191265		N		193615
Probe #	N/A		N/A				N/A
Calibration Due Date:	3-4-05		4-20-05			A	5-19-05
	α	β	α	β	α	β	
Background	0 cpm	25 cpm	0 cpm	25 cpm	N cpm	cpm	6 μR/hr
Efficiency	29 %	25 %	29 %	25 %	%	%	
MDA	25 dpm	130 dpm	25 dpm	130 dpm	dpm	A dpm	

Maximum Contact Dose Rate: .008 mrem/hr Transport Index: 0 mrem/hr

	α cpm	α dpm/100 cm2	β cpm	β dpm/100 cm2
ALARA Limit	N/A	60	N/A	500
Smear #				
1	0	<MDA	27	<MDA
2	0		36	
3	0		30	
4	0		23	
5	0		31	
6	0		16	

Smear Locations: 1 - Bottom 2 - Front 3 - Right Side 4 - Back 5 - Left Side 6 - Top

DEBRA LePage — Debra LePage

Surveyor Name — Surveyor Signature

George Economos

Supervisor Approval

22974-S-DR0099184-05.0

Date: 12/13/04 Time:1609

1-05-05 9:08 Bag# 9184

17910 lb GR

010505 0908 9184 0017910

BagNum	MANIFEST GROSS WEIGHT
9163	21920

Shipment Survey

Survey Number: GTEOSI-04-7595 Date: 12-1-04 Time: 1618

Waste Container Type: Super Sack Intermodal Other: NA

Waste Container ID #: 9163 Storage Bin: 42 Gross Weight: 21920 lbs

	Ludlum 3030		Ludlum 3030		Ludlum 3030		
Serial #	190641		191265				
Probe #	N/A		N/A		N/A		N/A
Calibration Due Date:	3-4-05		4-20-05				
	α	β	α	β	α	β	
Background	0 cpm	25 cpm	0 cpm	25 cpm	cpm	cpm	6 μR/hr
Efficiency	29 %	25 %	29 %	25 %	N/A %	N/A %	
MDA	25 dpm	130 dpm	25 dpm	130 dpm	dpm	dpm	

Maximum Contact Dose Rate: .006 mrem/hr Transport Index: 0 mrem/hr

	α cpm	α dpm/100 cm2	β cpm	β dpm/100 cm2
ALARA Limit	N/A	60	N/A	500
Smear #				
1	0	<MDA	31	<MDA
2	0		30	
3	1		31	
4	0		35	
5	0		40	
6	0		35	

Smear Locations: 1 - Bottom 2 - Front 3 - Right Side 4 - Back 5 - Left Side 6 - Top

THOMPSON
Surveyor Name

Surveyor Signature

George Emmons
Supervisor Approval

21775-S-04W199163-99.9
Date: 11/22/04 Time:0817

12-01-04 17:11 Bag# 9163
21920 lb GR
120104 1711 9163 0021920

BagNum	MANIFEST GROSS WEIGHT
9183	17860

Shipment Survey

Survey Number: GTEOSI-04-10507 Date: 12-13-04 Time: 1034

Waste Container Type: Super Sack Intermodal Other: Soil

Waste Container ID #: 9183 Storage Bin: 47 Gross Weight: 17860 lbs

	Ludlum 3030		Ludlum 3030		Ludlum 3030		Ludlum 19
Serial #	190641		191265		N		193615
Probe #	N/A		N/A				N/A
Calibration Due Date:	3-4-05		4-20-05			A	5-19-05
	α	β	α	β	α	β	
Background	0 cpm	25 cpm	0 cpm	25 cpm	N cpm	cpm	6 μR/hr
Efficiency	29 %	25 %	29 %	25 %	%	%	
MDA	25 dpm	130 dpm	25 dpm	130 dpm	dpm	A dpm	

Maximum Contact Dose Rate: .007 mrem/hr Transport Index: 0 mrem/hr

	α cpm	α dpm/100 cm2	β cpm	β dpm/100 cm2
ALARA Limit	N/A	60	N/A	500
Smear #				
1	0	<MDA	38	<MDA
2	0		27	
3	0		31	
4	0		33	
5	0		37	
6	0		28	

Smear Locations: 1 - Bottom 2 - Front 3 - Right Side 4 - Back 5 - Left Side 6 - Top

DEBRA LePage — Debra LePage
Surveyor Name — Surveyor Signature

George Economos
Supervisor Approval

22971-S-DR0099183-05.0
Date: 12/13/04 Time:1557

1-05-05 9:12 Bag# 9183
17860 lb GR
010505 0912 9183 0017860

NYSDEC:V00089-1; URS27010-039

BagNum	MANIFEST GROSS WEIGHT
9192	18140

Shipment Survey

Survey Number: GTEDSI-04-10512 Date: 12.13.04 Time: 1220

Waste Container Type: Super Sack Intermodal Other: soil

Waste Container ID #: 9192 Storage Bin: 48 Gross Weight: 18140 lbs

	Ludlum 3030		Ludlum 3030		Ludlum 3030		Ludlum 19
Serial #	190641		191265		N		193615
Probe #	N/A		N/A				N/A
Calibration Due Date:	3-4-05		4-20-05			A	5-19-05
	α	β	α	β	α	β	
Background	0 cpm	25 cpm	0 cpm	25 cpm	N cpm	cpm	6 μR/hr
Efficiency	29 %	25 %	29 %	25 %	%	%	
MDA	25 dpm	130 dpm	25 dpm	130 dpm	dpm	A dpm	

Maximum Contact Dose Rate: .008 mrem/hr Transport Index: 0 mrem/hr

	α cpm	α dpm/100 cm2	β cpm	β dpm/100 cm2
ALARA Limit	N/A	60	N/A	500
Smear #				
1	0	<MDA	25	<MDA
2	0		20	
3	0		37	
4	0		21	
5	0		36	
6	1		30	

Smear Locations: 1 - Bottom 2 - Front 3 - Right Side 4 - Back 5 - Left Side 6 - Top

DEBRA LEPage Debra LePage
Surveyor Name Surveyor Signature

George Economos
Supervisor Approval

23391-S-DRP119192-05.0
Date: 12/17/04 Time: 1441

1-05-05 9:21 Bag# 9192
18140 lb GR
010505 0921 9192 0018140

BagNum	MANIFEST GROSS WEIGHT
9170	18370

Shipment Survey

Survey Number: GTE051-05 00302 Date: 1·12·05 Time: 1100

Waste Container Type: Super Sack Intermodal Other: Soil

Waste Container ID #: 9170 Storage Bin: 46 Gross Weight: 18370 lbs

	Ludlum 3030		Ludlum 3030		Ludlum 3030		Ludlum 19
Serial #	190641		191265		N/A		176124
Probe #	NA		NA				NA
Calibration Due Date:	3·4·05		4·20·05				3·8·05
	α	β	α	β	α	β	
Background	0 cpm	25 cpm	0 cpm	25 cpm	cpm	cpm	6 µR/hr
Efficiency	29 %	25 %	29 %	25 %	%	%	
MDA	25 dpm	130 dpm	25 dpm	130 dpm	dpm	dpm	

Maximum Contact Dose Rate: .012 mrem/hr Transport Index: 0 mrem/hr

	α cpm	α dpm/100 cm2	β cpm	β dpm/100 cm2
ALARA Limit	N/A	60	N/A	600
Smear #				
1	0	LMDA	33	LMDA
2	0		33	
3	0		29	
4	0		27	
5	0		31	
6	0		36	

Smear Locations: 1 - Bottom 2 - Front 3 - Right Side 4 - Back 5 - Left Side 6 - Top

Thompson
Surveyor Name

Surveyor Signature

George Economos
Supervisor Approval

22815-S-09F229170-99.9
Date: 12/10/04 Time:0833

1-12-05 11:00 Bag# 9170
18370 lb GR
011205 1100 9170 0018370

Attachment 5.10
TRANSPORT VEHICLE RELEASE CHECKLIST

Shipment Number- QB40-01-984

Truck Number- 38 & 44

Trailer Number- 225 & 226

A qualified MHF-LS shipping technician shall verify that each item listed is satisfactory and then place a Check Mark in the corresponding box.

1. Driver possesses a valid driver's license with a HAZMAT endorsement ☑
2. Driver possesses a valid copy of a "Research and Special Programs Administration" U.S. DOT Hazmat Registration Certificate ☑
3. If manifested on a Hazardous Waste Manifest, ensure the carrier possesses a current EPA ID # ☑
4. Lamps are operable ☑
   - Headlights and Brights
   - Warning Lights and Flashers
   - Brake Lights
5. Coupling devices are intact ☑
6. Tires are sufficient ☑
   - No fabric is exposed through tread or sidewall
   - Front wheel tires must have tread pattern to a depth of ≥1/8 inch
   - Other tires must have tread pattern to a depth of ≥1/16 inch
   - Re-treaded tires are not authorized
7. Horn is operable ☑
8. Windshield wipers are operable ☑
9. Rear-vision mirrors are adequate (1 on each side) ☑
10. Emergency equipment is on-hand and accessible ☑
    - Fire extinguisher
    - Warning devices- bi-directional emergency reflectors, triangles (3), or liquid burning flares
11. General vehicle integrity is satisfactory ☑
    - Frame appears undamaged
    - Flooring is sufficient to support load
    - If a closed transport vehicle, vehicle is closed
    - Vehicle is otherwise in unimpaired physical condition
12. Vehicle truck and trailer have current DOT inspection stickers on both components (Good for 1 year from date performed) ☑
13. Vehicle is properly placarded (Exclusive Use LSA, Yellow III and HRCQ only) ☑
14. Shoring, strapping, blocking and bracing is adequate to prevent shifting of lading ☑

MHF-LS Qualified Technician Signature [signature]
Shipment Date 5-19-05

Attachment 5.9
LOADING DIAGRAM

A qualified MHF-LS shipper shall complete the following diagram by writing the package number and corresponding weight at the approximate position in which it is placed. The space to the left of the diagram may be used for additional or explanatory information as necessary.

Shipment Number- 0840-01-984

Front

9186
18580-lbs

9184
17910-lbs

Rear

MHF-LS Qualified Technician
Signature _____
Shipment Date 5-19-05

Attachment 5.9
LOADING DIAGRAM

A qualified MHF-LS shipper shall complete the following diagram by writing the package number and corresponding weight at the approximate position in which it is placed. The space to the left of the diagram may be used for additional or explanatory information as necessary.

Shipment Number- 0840-01-984

Front

9163
21920-lbs

9221
17230-lbs

Rear

MHF-LS Qualified Technician
Signature _____
Shipment Date 5-19-05

Attachment 5.9
LOADING DIAGRAM

A qualified MHF-LS shipper shall complete the following diagram by writing the package number and corresponding weight at the approximate position in which it is placed. The space to the left of the diagram may be used for additional or explanatory information as necessary.

Shipment Number- 0840.01-984

Front

9183
17860-lbs

9192
18140-lbs

Rear

MHF-LS Qualified Technician
Signature [signature]
Shipment Date 5-19-05

Attachment 5.9
LOADING DIAGRAM

A qualified MHF-LS shipper shall complete the following diagram by writing the package number and corresponding weight at the approximate position in which it is placed. The space to the left of the diagram may be used for additional or explanatory information as necessary.

Shipment Number- 0840-01-984

Front

9216
19730-lbs

9212
15980-lbs

Rear

MHF-LS Qualified Technician
Signature _____
Shipment Date 5-19-05

Attachment 5.9
LOADING DIAGRAM

A qualified MHF-LS shipper shall complete the following diagram by writing the package number and corresponding weight at the approximate position in which it is placed. The space to the left of the diagram may be used for additional or explanatory information as necessary.

Shipment Number- 0840-01-984

Front

9170
18370-lbs

9188
11750-lbs

Rear

MHF-LS Qualified Technician
Signature [signature]
Shipment Date 5-19-05

Attachment 5.15
RAILCAR INSPECTION FORM

Shipment Number	Carrier	Railcar Number
0840-01-984	NVARR / MHF	NHRX-0765

Item	SAT	UNSAT	Criteria	Comments
Coupler	☒	☐	Hardware intact, no cracks or broken welds, latching mechanism works properly, no loose or damaged parts	
Suspension	☒	☐	Hardware intact, no visible cracks or broken welds, coil springs seated and intact, inner and outer bearings intact and seated properly	
Wheel & Axle Assembly	☒	☐	Overall condition, no cracks or damaged areas on wheel surfaces, hubs centered, bolting intact, rims not bent or cracked	
Frame & Undercarriage	☒	☐	Main beams straight and centered, no major bends or damage, welds intact, no cracks	
Floors & Walls (Gondola, Boxcar)	☒	☐	No damage with open holes, punch throughs, ect. No rust damage, seams and welds intact, no rotting or other material problems, structurally sound	
Attachment Points or Tie Downs	☒	☐	Tie down hardware straight and intact, no cracks on or around attachment hardware, mechanical clips or latches operable and complete	
Doors (Boxcar Only)	☒	☐	Can be closed and secured properly, lubricated properly, rollers and tracks in operable condition, no loose or missing hardware, sealing surfaces intact and seals in serviceable condition	
Seals and Gasket	☒	☐	Seal Flanges intact with no dents or bends that affect sealing capability, gaskets pliable and in serviceable condition, no torn or missing areas, gasket appropriate to meet sealing requirements	
Seams (Gondola, Boxcar)	☒	☐	Seams intact, welds visibly sufficient, all corners and mating interfaces caulked and sealed properly	
Drains	☒	☐	Drains plugged or sealed properly, verify threaded plugs are tack welded or otherwise disabled, all other holes closed and sealed	
Brakes	☒	☐	Visibly inspect brake shoes, minimum 1" contact surface on all shoes, hoses and piping (tubing) mechanically sound, no missing or loose hardware, valves operate freely, no kinks or obstructions in piping or hoses	
Paint and Lettering	☒	☐	Overall good condition of exterior surfaces, identification numbering legible and intact, areas for placards or labels intact and structurally sound (Wood or metal panels)	
Bracing	☒	☐	Bracing and shoring must be sufficient to prevent shifting of lading during conditions normally incident to transportation	

MHF-LS Qualified Technician Signature [signature]

Shipment Date 5-19-05

Straight Bill of Lading

Shipper MHF-LS For GTE Operations Support Incorporated
140 Contiague Rock Road
Hicksville, NY 11369

Date: 5/19/2005

Consigned to MHF-LS @ New York-Atlantic Rail Spur
Hicksville, NY 11369

Load in Gondola # NHRX 766

Emergency Contact: CHEMTREC 800-424-9300

TR: TL:

Quantity	Description		Net Waste Weight
2	Soil, DOT Non-Regulated Waste, Containing		
	Radioactive Materials.		
	Package ID Number		**Pounds:**
	Liner	9163	21920
	Liner	9221	17230
			Total:
			39150
	Packages do not meet the DOT "radioactive material"		
	definition in 49 CFR 173.403.		
	Radionuclide: Ac-227,Th-227, Th232, Th230,Pa-231,Ra-223		
	Ra-226,Ra-228,Th-228,U-234,U-nat,		
	Total Activity: 2.3793 MBq		
	Physical Form: Solid		
	Chemical Form: Metal Oxide		

2.3793

GENERATOR CERTIFICATION: I hereby certify and declare that the contents of this consignment are fully and accurately described above by proper shipping name and are classified, packed, marked, and labeled, and are in all respects in proper condition for transport by highway according to applicable international and national government regulations.

Printed/Typed Name	Signature		Date
Timmy Mock for MHFLS at GTEOSI			5/19/2005
Transporter	Signature		Date
Priority Transport			5/19/2005

Straight Bill of Lading

Shipper	MHF-LS For GTE Operations Support Incorporated 140 Contiague Rock Road Hicksville, NY 11369	Date: 5/19/2005
Consigned to	MHF-LS @ New York-Atlantic Rail Spur Hicksville, NY 11369	Load in Gondola # NHRX
Emergency Contact:	CHEMTREC 800-424-9300	766

TR: TL:

Quantity	Description		Net Waste Weight
2	Soil, DOT Non-Regulated Waste, Containing		
	Radioactive Materials.		
	Package ID Number		**Pounds:**
	Liner	9216	19730
	Liner	9212	15980
			Total:
			35710
	Packages do not meet the DOT "radioactive material"		
	definition in 49 CFR 173.403.		
	Radionuclide: Ac-227,Th-227, Th232, Th230,Pa-231,Ra-223		
	Ra-226,Ra-228,Th-228,U-234,U-nat,		
	Total Activity: 2.6295 MBq		
	Physical Form: Solid		
	Chemical Form: Metal Oxide		

GENERATOR CERTIFICATION: I hereby certify and declare that the contents of this consignment are fully and accurately described above by proper shipping name and are classified, packed, marked, and labeled, and are in all respects in proper condition for transport by highway according to applicable international and national government regulations.

Printed/Typed Name	Signature		Date
Robert Miller for MHFLS at GTEOSI			5/19/2005
Transporter	Signature		Date
Priority Transport			5/19/2005

Straight Bill of Lading

Shipper	MHF-LS For GTE Operations Support Incorporated 140 Contiague Rock Road Hicksville, NY 11369	Date: 5/19/2005
Consigned to	MHF-LS @ New York-Atlantic Rail Spur Hicksville, NY 11369	Load in Gondola # NHRX
Emergency Contact:	CHEMTREC 800-424-9300	766

TR: TL:

Quantity	Description		Net Waste Weight
2	Soil, DOT Non-Regulated Waste, Containing		
	Radioactive Materials.		
	Package ID Number		**Pounds:**
	Liner	9188	11750
	Liner	9170	18370
			Total:
			30120
	Packages do not meet the DOT "radioactive material"		
	definition in 49 CFR 173.403.		
	Radionuclide: Ac-227,Th-227, Th232, Th230,Pa-231,Ra-223		
	Ra-226,Ra-228,Th-228,U-234,U-nat,		
	Total Activity: 2.46273 MBq		
	Physical Form: Solid		
	Chemical Form: Metal Oxide		

GENERATOR CERTIFICATION: I hereby certify and declare that the contents of this consignment are fully and accurately described above by proper shipping name and are classified, packed, marked, and labeled, and are in all respects in proper condition for transport by highway according to applicable international and national government regulations.

Printed/Typed Name	Signature		Date
Robert Miller for MHFLS at GTEOSI			5/19/2005
Transporter	Signature		Date
Priority Transport			5/19/2005

Straight Bill of Lading

Shipper MHF-LS For GTE Operations Support Incorporated
140 Contiague Rock Road
Hicksville, NY 11369

Date: 5/19/2005

Consigned to MHF-LS @ New York-Atlantic Rail Spur
Hicksville, NY 11369

Load in Gondola # NHRX 766

Emergency Contact: CHEMTREC 800-424-9300

TR:

Quantity	Description		Net Waste Weight
2	Soil, DOT Non-Regulated Waste, Containing		
	Radioactive Materials.		
	Package ID Number		**Pounds:**
	Liner	9183	17860
	Liner	9192	18140
			Total:
			36000
	Packages do not meet the DOT "radioactive material"		
	definition in 49 CFR 173.403.		
	Radionuclide: Ac-227,Th-227, Th232, Th230,Pa-231,Ra-223		
	Ra-226,Ra-228,Th-228,U-234,U-nat		
	Total Activity: 7.3912 MBq		
	Physical Form: Solid		
	Chemical Form: Metal Oxide		

7.3912

GENERATOR CERTIFICATION: I hereby certify and declare that the contents of this consignment are fully and accurately described above by proper shipping name and are classified, packed, marked, and labeled, and are in all respects in proper condition for transport by highway according to applicable international and national government regulations.

Printed/Typed Name	Signature		Date
Robert Miller for MHFLS at GTEOSI			5/19/2005
Transporter	Signature		Date
Priority Transport			5/19/2005

Straight Bill of Lading

Shipper	MHF-LS For GTE Operations Support Incorporated 140 Contiague Rock Road Hicksville, NY 11369	Date: 5/19/2005
Consigned to	MHF-LS @ New York-Atlantic Rail Spur Hicksville, NY 11369	Load in Gondola # NHRX
Emergency Contact:	CHEMTREC 800-424-9300	766

Total All Trucks
177470

TR: TL:

Quantity	Description		Net Waste Weight
2	Soil, DOT Non-Regulated Waste, Containing		
	Radioactive Materials.		
	Package ID Number		**Pounds:**
	Liner	9186	18580
	Liner	9184	17910
			Total:
			36490
	Packages do not meet the DOT "radioactive material"		
	definition in 49 CFR 173.403.		
	Radionuclide: Ac-227,Th-227, Th232, Th230,Pa-231,Ra-223		
	Ra-226,Ra-228,Th-228,U-234,U-nat,		
	Total Activity: 5.6658 MBq		
	Physical Form: Solid		
	Chemical Form: Metal Oxide		

GENERATOR CERTIFICATION: I hereby certify and declare that the contents of this consignment are fully and accurately described above by proper shipping name and are classified, packed, marked, and labeled, and are in all respects in proper condition for transport by highway according to applicable international and national government regulations

Printed/Typed Name	Signature		Date
Robert Miller for MHFLS at GTEOSI			5/19/2005
Transporter	Signature		Date
Priority Transport			5/19/2005

NHRX	Shipment #	0											
	new	Bag #	9186	9184	9163	9221	9183	9192	9216	9212	9170	9188	
	Storage Loc.		18580	17910	21920	17230	17860	18140	19730	15980	18370	11750	
766	0840-01-984	200000											

container #
9186

shipping check sheet (For Form 540)

	Ac-227	activity-pCi/g	corrected	activity mBq	activity mCi	activity Ci	SNM	source	
		6.765E-002	6.765E-002	2.1023E-02	5.6819E-04	5.6819E-07	grams	kg	
grams		spec activity	pCi/g				7.8916E-09	7.8916E-12	
8399000		7.2000E+01							
	Pa-231	activity-pCi/g		activity mBq	activity mCi	activity Ci	SNM	source	
18500		3.300E-001	3.300E-001	1.0255E-01	2.7717E-03	2.7717E-06	grams	kg	
grams		spec activity					5.8972E-05	5.8972E-08	
8399000		4.7000E-02							
	Ra-223	activity-pCi/g		activity mBq	activity mCi	activity Ci	SNM	source	
18500		5.962E-002	5.962E-002	1.8528E-02	5.0075E-04	5.0075E-07	grams	kg	
grams		spec activity					9.8186E-12	9.8186E-15	
8399000		5.1000E+04							
	Ra-226	activity-pCi/g		activity mBq	activity mCi	activity Ci	SNM	source	
18500		5.071E-001	3.6815E-01	1.1441E-01	3.0921E-03	3.0921E-06	grams	kg	1.37741
grams		spec activity					3.0921E-06	3.0921E-09	
8399000		1.0000E+00							
	Ra228	activity-pCi/g		activity mBq	activity mCi	activity Ci	SNM	source	
18500		7.734E-001	1.0970E+00	3.4091E-01	9.2139E-03	9.2139E-06	grams	kg	0.705
grams		spec activity					3.4125E-08	3.4125E-11	
8399000		2.7000E+02							
	TH-227	activity-pCi/g		activity mBq	activity mCi	activity Ci	SNM	source	
18500		6.765E-002	6.765E-002	2.1023E-02	5.6819E-04	5.6819E-07	grams	kg	
grams		spec activity					1.8329E-11	1.8329E-14	
8399000		3.1000E+04							
	Th-228	activity-pCi/g		activity mBq	activity mCi	activity Ci	SNM	source	
18500		6.772E-001	1.2230E+00	3.8007E-01	1.0272E-02	1.0272E-05	grams	kg	
grams		spec activity					1.2527E-08	1.2527E-11	0.55371
8399000		8.2000E+02							
	Th-230	activity-pCi/g		activity mBq	activity mCi	activity Ci	SNM	source	
18500		7.734E-001	5.7386E-01	1.7834E-01	4.8199E-03	4.8199E-06	grams	kg	
grams		spec activity					2.2952E-04	2.2952E-07	1.34771
8399000		2.1000E-02							
	TH-232	activity-pCi/g		activity mBq	activity mCi	activity Ci	SNM	source	
18500		7.734E-001	1.0970E+00	3.4091E-01	9.2139E-03	9.2139E-06	grams	kg	0.705
grams		spec activity					8.3763E+01	8.3763E-02	
8399000		1.1000E-07							
	U-234	activity-pCi/g		activity mBq	activity mCi	activity Ci	SNM	source	
18500		1.271E+000	1.1286E+00	3.5074E-01	9.4795E-03	9.4795E-06	grams	kg	1.12613
grams		spec activity					1.5289E-03	1.5289E-06	
8399000		6.2000E-03							
	U-235	activity-pCi/g		activity mBq	activity mCi	activity Ci	SNM	source	
18500		3.968E-001	5.0807E-01	1.5789E-01	4.2673E-03	4.2673E-06	grams	kg	0.781
grams		spec activity					1.9397E+00	1.9397E-03	
8399000		2.2000E-06							
	U-238	activity-pCi/g		activity mBq	activity mCi	activity Ci	SNM	source	
18500		1.271E+000	1.7152E+00	5.3304E-01	1.4406E-02	1.4406E-05	grams	kg	0.741
grams		spec activity					4.2372E+01	4.2372E-02	
8399000		3.4000E-07							

Totals for all flag 1 data

		activity-pCi/g	corrected	activity mBq	activity mCi	activity Ci	SNM	source	
18500		6.9682E+00	8.1683E+00	2.5594E+00	6.9174E-02	6.9174E-05	grams	kg	flag1 data
			pCi/g	541 will be < than the 540 (MDA not added)			1.9397E+00	1.2614E-01	
146.8253968				data for NORM					
	U-nat	activity-pCi/g	corrected pCi/g	activity mBq	activity mCi	activity Ci		source	
		1.6678E+00	2.2233E+00	6.9092E-01	1.8674E-02	1.8674E-05		kg	
		spec activity						2.6301E-02	
		7.1000E-07							

U-nat	activity-pCi/g	corrected pCi/g	activity mBq	activity mCi	activity Ci		source	
	6.9682E+00	8.1683E+00	2.5594E+00	6.9174E-02	6.9174E-05		kg total	norm data
							1.1007E-01	

b

container #
9184

shipping check sheet (For Form 540)

	Ac-227		corrected	activity mBq	activity mCi	activity Ci	SNM	source	
		8.384E-002	8.384E-002	2.5111E-02	6.7867E-04	6.7867E-07	grams	kg	
grams			pCi/g				9.4260E-09	9.4260E-12	
8094820		7.2000E+01							
	Pa-231			activity mBq	activity mCi	activity Ci	SNM	source	
17830		3.767E-001	3.767E-001	1.1282E-01	3.0493E-03	3.0493E-06	grams	kg	
grams							6.4879E-05	6.4879E-08	
8094820		4.7000E-02							
	Ra-223			activity mBq	activity mCi	activity Ci	SNM	source	
17830		5.714E-002	5.714E-002	1.7114E-02	4.6254E-04	4.6254E-07	grams	kg	
grams							9.0694E-12	9.0694E-15	
8094820		5.1000E+04							
	Ra-226			activity mBq	activity mCi	activity Ci	SNM	source	
17830		4.173E-001	3.0296E-01	9.0739E-02	2.4524E-03	2.4524E-06	grams	kg	1.37741
grams							2.4524E-06	2.4524E-09	
8094820		1.0000E+00							
	Ra228			activity mBq	activity mCi	activity Ci	SNM	source	
17830		6.092E-001	8.6411E-01	2.5881E-01	6.9948E-03	6.9948E-06	grams	kg	0.705
grams							2.5907E-08	2.5907E-11	
8094820		2.7000E+02							
	TH-227			activity mBq	activity mCi	activity Ci	SNM	source	
17830		8.384E-002	8.384E-002	2.5111E-02	6.7867E-04	6.7867E-07	grams	kg	
grams							2.1893E-11	2.1893E-14	
8094820		3.1000E+04							
	Th-228			activity mBq	activity mCi	activity Ci	SNM	source	
17830		5.183E-001	9.3605E-01	2.8035E-01	7.5772E-03	7.5772E-06	grams	kg	
grams							9.2404E-09	9.2404E-12	0.55371
8094820		8.2000E+02							
	Th-230			activity mBq	activity mCi	activity Ci	SNM	source	
17830		6.092E-001	4.5203E-01	1.3539E-01	3.6591E-03	3.6591E-06	grams	kg	
grams							1.7424E-04	1.7424E-07	1.34771
8094820		2.1000E-02							
	TH-232			activity mBq	activity mCi	activity Ci	SNM	source	
17830		6.092E-001	8.6411E-01	2.5881E-01	6.9948E-03	6.9948E-06	grams	kg	0.705
grams							6.3589E+01	6.3589E-02	
8094820		1.1000E-07							
	U-234			activity mBq	activity mCi	activity Ci	SNM	source	
17830		2.642E+000	2.3461E+00	7.0267E-01	1.8991E-02	1.8991E-05	grams	kg	1.12613
grams							3.0631E-03	3.0631E-06	
8094820		6.2000E-03							
	U-235			activity mBq	activity mCi	activity Ci	SNM	source	
17830		3.431E-001	4.3931E-01	1.3158E-01	3.5561E-03	3.5561E-06	grams	kg	0.781
grams							1.6164E+00	1.6164E-03	
8094820		2.2000E-06							
	U-238			activity mBq	activity mCi	activity Ci	SNM	source	
17830		2.642E+000	3.5655E+00	1.0679E+00	2.8862E-02	2.8862E-05	grams	kg	0.741
grams							8.4887E+01	8.4887E-02	
8094820		3.4000E-07							

Totals for all flag 1 data

			corrected	activity mBq	activity mCi	activity Ci	SNM	source	
17830		8.9918E+00	1.0288E+01	3.1064E+00	8.3956E-02	8.3956E-05	grams	kg	flag1 data
			pCi/g	541 will be < than the 540 (MDA not added)			1.6164E+00	1.4848E-01	
141.5079365				data for NORM					
	U-nat		corrected pCi/g	activity mBq	activity mCi	activity Ci		source	
		2.9851E+00	4.0048E+00	1.1995E+00	3.2418E-02	3.2418E-05		kg	
								4.5659E-02	
		7.1000E-07							

U-nat		corrected pCi/g	activity mBq	activity mCi	activity Ci		source	
	8.9918E+00	1.0288E+01	3.1064E+00	8.3956E-02	8.3956E-05		kg total	norm data
							1.0925E-01	

0

container #
9163

shipping check sheet (For Form 540)

	Ac-227		corrected	activity mBq	activity mCi	activity Ci	SNM	source	
		4.636E-002	4.636E-002	1.7008E-02	4.5968E-04	4.5968E-07	grams	kg	
grams			pCi/g				6.3844E-09	6.3844E-12	
9915360		7.2000E+01							
	Pa-231			activity mBq	activity mCi	activity Ci	SNM	source	
21840		3.134E-001	3.134E-001	1.1498E-01	3.1075E-03	3.1075E-06	grams	kg	
grams							6.6116E-05	6.6116E-08	
9915360		4.7000E-02							
	Ra-223			activity mBq	activity mCi	activity Ci	SNM	source	
21840		3.394E-002	3.394E-002	1.2452E-02	3.3653E-04	3.3653E-07	grams	kg	
grams							6.5986E-12	6.5986E-15	
9915360		5.1000E+04							
	Ra-226			activity mBq	activity mCi	activity Ci	SNM	source	
21840		1.478E-001	1.0730E-01	3.9366E-02	1.0639E-03	1.0639E-06	grams	kg	1.37741
grams							1.0639E-06	1.0639E-09	
9915360		1.0000E+00							
	Ra228			activity mBq	activity mCi	activity Ci	SNM	source	
21840		1.169E-001	1.6582E-01	6.0832E-02	1.6441E-03	1.6441E-06	grams	kg	0.705
grams							6.0893E-09	6.0893E-12	
9915360		2.7000E+02							
	TH-227			activity mBq	activity mCi	activity Ci	SNM	source	
21840		4.636E-002	4.636E-002	1.7008E-02	4.5968E-04	4.5968E-07	grams	kg	
grams							1.4828E-11	1.4828E-14	
9915360		3.1000E+04							
	Th-228			activity mBq	activity mCi	activity Ci	SNM	source	
21840		1.855E-001	3.3501E-01	1.2291E-01	3.3218E-03	3.3218E-06	grams	kg	
grams							4.0509E-09	4.0509E-12	0.55371
9915360		8.2000E+02							
	Th-230			activity mBq	activity mCi	activity Ci	SNM	source	
21840		1.169E-001	8.6740E-02	3.1822E-02	8.6006E-04	8.6006E-07	grams	kg	
grams							4.0955E-05	4.0955E-08	1.34771
9915360		2.1000E-02							
	TH-232			activity mBq	activity mCi	activity Ci	SNM	source	
21840		1.169E-001	1.6582E-01	6.0832E-02	1.6441E-03	1.6441E-06	grams	kg	0.705
grams							1.4947E+01	1.4947E-02	
9915360		1.1000E-07							
	U-234			activity mBq	activity mCi	activity Ci	SNM	source	
21840		6.535E-001	5.8031E-01	2.1290E-01	5.7539E-03	5.7539E-06	grams	kg	1.12613
grams							9.2806E-04	9.2806E-07	
9915360		6.2000E-03							
	U-235			activity mBq	activity mCi	activity Ci	SNM	source	
21840		8.829E-002	1.1305E-01	4.1474E-02	1.1209E-03	1.1209E-06	grams	kg	0.781
grams							5.0950E-01	5.0950E-04	
9915360		2.2000E-06							
	U-238			activity mBq	activity mCi	activity Ci	SNM	source	
21840		6.535E-001	8.8192E-01	3.2355E-01	8.7445E-03	8.7445E-06	grams	kg	0.741
grams							2.5719E+01	2.5719E-02	
9915360		3.4000E-07							

Totals for all flag 1 data

			corrected	activity mBq	activity mCi	activity Ci	SNM	source	
21840		2.5194E+00	2.8297E+00	1.0551E+00	2.8517E-02	2.8517E-05	grams	kg	flag1 data
			pCi/g	541 will be < than the 540 (MDA not added)			5.0950E-01	4.0667E-02	
173.3333333				data for NORM					
	U-nat		corrected pCi/g	activity mBq	activity mCi	activity Ci		source	
		7.4179E-01	9.9496E-01	3.6502E-01	9.8654E-03	9.8654E-06		kg	
								1.3895E-02	
		7.1000E-07							

	U-nat		corrected pCi/g	activity mBq	activity mCi	activity Ci		source	
		2.5194E+00	2.8297E+00	1.0551E+00	2.8517E-02	2.8517E-05		kg total	norm data
								2.8843E-02	

X

container #
9221

shipping check sheet (For Form 540)

	Ac-227	activity-pCi/g	corrected	activity mBq	activity mCi	activity Ci	SNM	source	
		5.912E-002	5.912E-002	1.7032E-02	4.6031E-04	4.6031E-07	grams	kg	
grams		spec activity	pCi/g				6.3933E-09	6.3933E-12	
7786100		7.2000E+01							
	Pa-231	activity-pCi/g		activity mBq	activity mCi	activity Ci	SNM	source	
17150		1.629E-001	1.629E-001	4.6929E-02	1.2684E-03	1.2684E-06	grams	kg	
grams		spec activity					2.6986E-05	2.6986E-08	
7786100		4.7000E-02							
	Ra-223	activity-pCi/g		activity mBq	activity mCi	activity Ci	SNM	source	
17150		2.259E-002	2.259E-002	6.5079E-03	1.7589E-04	1.7589E-07	grams	kg	
grams		spec activity					3.4488E-12	3.4488E-15	
7786100		5.1000E+04							
	Ra-226	activity-pCi/g		activity mBq	activity mCi	activity Ci	SNM	source	
17150		1.683E-001	1.2219E-01	3.5200E-02	9.5135E-04	9.5135E-07	grams	kg	1.37741
grams		spec activity					9.5135E-07	9.5135E-10	
7786100		1.0000E+00							
	Ra228	activity-pCi/g		activity mBq	activity mCi	activity Ci	SNM	source	
17150		2.691E-001	3.8170E-01	1.0996E-01	2.9720E-03	2.9720E-06	grams	kg	0.705
grams		spec activity					1.1007E-08	1.1007E-11	
7786100		2.7000E+02							
	TH-227	activity-pCi/g		activity mBq	activity mCi	activity Ci	SNM	source	
17150		5.912E-002	5.912E-002	1.7032E-02	4.6031E-04	4.6031E-07	grams	kg	
grams		spec activity					1.4849E-11	1.4849E-14	
7786100		3.1000E+04							
	Th-228	activity-pCi/g		activity mBq	activity mCi	activity Ci	SNM	source	
17150		2.666E-001	4.8148E-01	1.3871E-01	3.7488E-03	3.7488E-06	grams	kg	
grams		spec activity					4.5718E-09	4.5718E-12	0.55371
7786100		8.2000E+02							
	Th-230	activity-pCi/g		activity mBq	activity mCi	activity Ci	SNM	source	
17150		2.691E-001	1.9967E-01	5.7523E-02	1.5547E-03	1.5547E-06	grams	kg	
grams		spec activity					7.4032E-05	7.4032E-08	1.34771
7786100		2.1000E-02							
	TH-232	activity-pCi/g		activity mBq	activity mCi	activity Ci	SNM	source	
17150		2.691E-001	3.8170E-01	1.0996E-01	2.9720E-03	2.9720E-06	grams	kg	0.705
grams		spec activity					2.7018E+01	2.7018E-02	
7786100		1.1000E-07							
	U-234	activity-pCi/g		activity mBq	activity mCi	activity Ci	SNM	source	
17150		1.116E+000	9.9100E-01	2.8549E-01	7.7161E-03	7.7161E-06	grams	kg	1.12613
grams		spec activity					1.2445E-03	1.2445E-06	
7786100		6.2000E-03							
	U-235	activity-pCi/g		activity mBq	activity mCi	activity Ci	SNM	source	
17150		1.789E-001	2.2907E-01	6.5990E-02	1.7835E-03	1.7835E-06	grams	kg	0.781
grams		spec activity					8.1069E-01	8.1069E-04	
7786100		2.2000E-06							
	U-238	activity-pCi/g		activity mBq	activity mCi	activity Ci	SNM	source	
17150		1.116E+000	1.5061E+00	4.3388E-01	1.1726E-02	1.1726E-05	grams	kg	0.741
grams		spec activity					3.4490E+01	3.4490E-02	
7786100		3.4000E-07							

Totals for all flag 1 data

		activity-pCi/g	corrected	activity mBq	activity mCi	activity Ci	SNM	source	
17150		3.9568E+00	4.5375E+00	1.3242E+00	3.5790E-02	3.5790E-05	grams	kg	flag1 data
			pCi/g	541 will be < than the 540 (MDA not added)			8.1069E-01	6.1509E-02	
136.1111111				data for NORM					
	U-nat	activity-pCi/g	corrected pCi/g	activity mBq	activity mCi	activity Ci		source	
		1.2949E+00	1.7351E+00	4.9987E-01	1.3510E-02	1.3510E-05		kg	
		spec activity						1.9028E-02	
		7.1000E-07							

U-nat	activity-pCi/g	corrected pCi/g	activity mBq	activity mCi	activity Ci		source	
	3.9568E+00	4.5375E+00	1.3242E+00	3.5790E-02	3.5790E-05		kg total	norm data
							4.6047E-02	

container #
9183

shipping check sheet (For Form 540)

	Ac-227		corrected	activity mBq	activity mCi	activity Ci	SNM	source	
		5.651E-002	5.651E-002	1.6878E-02	4.5616E-04	4.5616E-07	grams	kg	
grams			pCi/g				6.3355E-09	6.3355E-12	
8072120		7.2000E+01							
	Pa-231			activity mBq	activity mCi	activity Ci	SNM	source	
17780		4.036E-001	4.036E-001	1.2054E-01	3.2579E-03	3.2579E-06	grams	kg	
grams							6.9317E-05	6.9317E-08	
8072120		4.7000E-02							
	Ra-223			activity mBq	activity mCi	activity Ci	SNM	source	
17780		8.456E-002	8.456E-002	2.5255E-02	6.8258E-04	6.8258E-07	grams	kg	
grams							1.3384E-11	1.3384E-14	
8072120		5.1000E+04							
	Ra-226			activity mBq	activity mCi	activity Ci	SNM	source	
17780		3.667E-001	2.6622E-01	7.9513E-02	2.1490E-03	2.1490E-06	grams	kg	1.37741
grams							2.1490E-06	2.1490E-09	
8072120		1.0000E+00							
	Ra228			activity mBq	activity mCi	activity Ci	SNM	source	
17780		5.451E-001	7.7319E-01	2.3093E-01	6.2413E-03	6.2413E-06	grams	kg	0.705
grams							2.3116E-08	2.3116E-11	
8072120		2.7000E+02							
	TH-227			activity mBq	activity mCi	activity Ci	SNM	source	
17780		5.651E-002	5.651E-002	1.6878E-02	4.5616E-04	4.5616E-07	grams	kg	
grams							1.4715E-11	1.4715E-14	
8072120		3.1000E+04							
	Th-228			activity mBq	activity mCi	activity Ci	SNM	source	
17780		4.394E-001	7.9356E-01	2.3701E-01	6.4057E-03	6.4057E-06	grams	kg	
grams							7.8118E-09	7.8118E-12	0.55371
8072120		8.2000E+02							
	Th-230			activity mBq	activity mCi	activity Ci	SNM	source	
17780		5.451E-001	4.0446E-01	1.2080E-01	3.2649E-03	3.2649E-06	grams	kg	
grams							1.5547E-04	1.5547E-07	1.34771
8072120		2.1000E-02							
	TH-232			activity mBq	activity mCi	activity Ci	SNM	source	
17780		5.451E-001	7.7319E-01	2.3093E-01	6.2413E-03	6.2413E-06	grams	kg	0.705
grams							5.6739E+01	5.6739E-02	
8072120		1.1000E-07							
	U-234			activity mBq	activity mCi	activity Ci	SNM	source	
17780		6.963E+000	6.1831E+00	1.8467E+00	4.9911E-02	4.9911E-05	grams	kg	1.12613
grams							8.0501E-03	8.0501E-06	
8072120		6.2000E-03							
	U-235			activity mBq	activity mCi	activity Ci	SNM	source	
17780		4.768E-001	6.1050E-01	1.8234E-01	4.9280E-03	4.9280E-06	grams	kg	0.781
grams							2.2400E+00	2.2400E-03	
8072120		2.2000E-06							
	U-238			activity mBq	activity mCi	activity Ci	SNM	source	
17780		6.963E+000	9.3968E+00	2.8065E+00	7.5852E-02	7.5852E-05	grams	kg	0.741
grams							2.2309E+02	2.2309E-01	
8072120		3.4000E-07							

Totals for all flag 1 data

			corrected	activity mBq	activity mCi	activity Ci	SNM	source	
17780		1.7445E+01	1.9746E+01	5.9143E+00	1.5985E-01	1.5985E-04	grams	kg	flag1 data
			pCi/g	541 will be < than the 540 (MDA not added)			2.2400E+00	2.7984E-01	
141.1111111				data for NORM					
	U-nat		corrected pCi/g	activity mBq	activity mCi	activity Ci		source	
		7.4398E+00	1.0007E+01	2.9889E+00	8.0780E-02	8.0780E-05		kg	
								1.1377E-01	
		7.1000E-07							

U-nat		corrected pCi/g	activity mBq	activity mCi	activity Ci		source
	1.7445E+01	1.9746E+01	5.9143E+00	1.5985E-01	1.5985E-04		kg total
							1.7052E-01.

norm data

container #
9216

shipping check sheet (For Form 540)

	Ac-227		corrected	activity mBq	activity mCi	activity Ci	SNM	source	
		3.348E-002	3.348E-002	1.1051E-02	2.9868E-04	2.9868E-07	grams	kg	
grams			pCi/g				4.1483E-09	4.1483E-12	
8921100		7.2000E+01							
	Pa-231			activity mBq	activity mCi	activity Ci	SNM	source	
19650		3.153E-001	3.153E-001	1.0407E-01	2.8128E-03	2.8128E-06	grams	kg	
grams							5.9847E-05	5.9847E-08	
8921100		4.7000E-02							
	Ra-223			activity mBq	activity mCi	activity Ci	SNM	source	
19650		3.339E-002	3.339E-002	1.1021E-02	2.9788E-04	2.9788E-07	grams	kg	
grams							5.8407E-12	5.8407E-15	
8921100		5.1000E+04							
	Ra-226			activity mBq	activity mCi	activity Ci	SNM	source	
19650		1.720E-001	1.2487E-01	4.1218E-02	1.1140E-03	1.1140E-06	grams	kg	1.37741
grams							1.1140E-06	1.1140E-09	
8921100		1.0000E+00							
	Ra228			activity mBq	activity mCi	activity Ci	SNM	source	
19650		1.596E-001	2.2638E-01	7.4725E-02	2.0196E-03	2.0196E-06	grams	kg	0.705
grams							7.4799E-09	7.4799E-12	
8921100		2.7000E+02							
	TH-227			activity mBq	activity mCi	activity Ci	SNM	source	
19650		3.348E-002	3.348E-002	1.1051E-02	2.9868E-04	2.9868E-07	grams	kg	
grams							9.6348E-12	9.6348E-15	
8921100		3.1000E+04							
	Th-228			activity mBq	activity mCi	activity Ci	SNM	source	
19650		1.680E-001	3.0341E-01	1.0015E-01	2.7067E-03	2.7067E-06	grams	kg	
grams							3.3009E-09	3.3009E-12	0.55371
8921100		8.2000E+02							
	Th-230			activity mBq	activity mCi	activity Ci	SNM	source	
19650		1.596E-001	1.1842E-01	3.9089E-02	1.0565E-03	1.0565E-06	grams	kg	
grams							5.0308E-05	5.0308E-08	1.34771
8921100		2.1000E-02							
	TH-232			activity mBq	activity mCi	activity Ci	SNM	source	
19650		1.596E-001	2.2638E-01	7.4725E-02	2.0196E-03	2.0196E-06	grams	kg	0.705
grams							1.8360E+01	1.8360E-02	
8921100		1.1000E-07							
	U-234			activity mBq	activity mCi	activity Ci	SNM	source	
19650		8.552E-001	7.5941E-01	2.5067E-01	6.7748E-03	6.7748E-06	grams	kg	1.12613
grams							1.0927E-03	1.0927E-06	
8921100		6.2000E-03							
	U-235			activity mBq	activity mCi	activity Ci	SNM	source	
19650		2.020E-001	2.5864E-01	8.5373E-02	2.3074E-03	2.3074E-06	grams	kg	0.781
grams							1.0488E+00	1.0488E-03	
8921100		2.2000E-06							
	U-238			activity mBq	activity mCi	activity Ci	SNM	source	
19650		8.552E-001	1.1541E+00	3.8095E-01	1.0296E-02	1.0296E-05	grams	kg	0.741
grams							3.0282E+01	3.0282E-02	
8921100		3.4000E-07							

Totals for all flag 1 data

			corrected	activity mBq	activity mCi	activity Ci	SNM	source	
19650		3.1469E+00	3.5538E+00	1.1841E+00	3.2003E-02	3.2003E-05	grams	kg	flag1 data
			pCi/g	541 will be < than the 540 (MDA not added)			1.0488E+00	4.8643E-02	
155.952381				data for NORM					
	U-nat		corrected pCi/g	activity mBq	activity mCi	activity Ci		source	
		1.0572E+00	1.4128E+00	4.6632E-01	1.2603E-02	1.2603E-05		kg	
								1.7751E-02	
		7.1000E-07							

U-nat		corrected pCi/g	activity mBq	activity mCi	activity Ci		source	
	3.1469E+00	3.5538E+00	1.1841E+00	3.2003E-02	3.2003E-05		kg total	norm data
							3.6112E-02	

20

container #
9212

shipping check sheet (For Form 540)

	Ac-227	activity pCi/g	corrected	activity mBq	activity mCi	activity Ci	SNM	source	
		4.316E-002	4.316E-002	1.1528E-02	3.1155E-04	3.1155E-07	grams	kg	
grams		spec activity	pCi/g				4.3271E-09	4.3271E-12	
7218600		7.2000E+01							
	Pa-231	activity pCi/g		activity mBq	activity mCi	activity Ci	SNM	source	
15900		2.655E-001	2.655E-001	7.0912E-02	1.9165E-03	1.9165E-06	grams	kg	
grams		spec activity					4.0777E-05	4.0777E-08	
7218600		4.7000E-02							
	Ra-223	activity pCi/g		activity mBq	activity mCi	activity Ci	SNM	source	
15900		4.995E-002	4.995E-002	1.3341E-02	3.6057E-04	3.6057E-07	grams	kg	
grams		spec activity					7.0700E-12	7.0700E-15	
7218600		5.1000E+04							
	Ra-226	activity pCi/g		activity mBq	activity mCi	activity Ci	SNM	source	
15900		2.417E-001	1.7547E-01	4.6867E-02	1.2667E-03	1.2667E-06	grams	kg	1.37741
grams		spec activity					1.2667E-06	1.2667E-09	
7218600		1.0000E+00							
	Ra228	activity pCi/g		activity mBq	activity mCi	activity Ci	SNM	source	
15900		3.171E-001	4.4979E-01	1.2013E-01	3.2468E-03	3.2468E-06	grams	kg	0.705
grams		spec activity					1.2025E-08	1.2025E-11	
7218600		2.7000E+02							
	TH-227	activity pCi/g		activity mBq	activity mCi	activity Ci	SNM	source	
15900		4.316E-002	4.316E-002	1.1528E-02	3.1155E-04	3.1155E-07	grams	kg	
grams		spec activity					1.0050E-11	1.0050E-14	
7218600		3.1000E+04							
	Th-228	activity pCi/g		activity mBq	activity mCi	activity Ci	SNM	source	
15900		3.784E-001	6.8339E-01	1.8253E-01	4.9331E-03	4.9331E-06	grams	kg	
grams		spec activity					6.0160E-09	6.0160E-12	0.55371
7218600		8.2000E+02							
	Th-230	activity pCi/g		activity mBq	activity mCi	activity Ci	SNM	source	
15900		3.171E-001	2.3529E-01	6.2843E-02	1.6985E-03	1.6985E-06	grams	kg	
grams		spec activity					8.0879E-05	8.0879E-08	1.34771
7218600		2.1000E-02							
	TH-232	activity pCi/g		activity mBq	activity mCi	activity Ci	SNM	source	
15900		3.171E-001	4.4979E-01	1.2013E-01	3.2468E-03	3.2468E-06	grams	kg	0.705
grams		spec activity					2.9517E+01	2.9517E-02	
7218600		1.1000E-07							
	U-234	activity pCi/g		activity mBq	activity mCi	activity Ci	SNM	source	
15900		1.258E+000	1.1171E+00	2.9836E-01	8.0639E-03	8.0639E-06	grams	kg	1.12613
grams		spec activity					1.3006E-03	1.3006E-06	
7218600		6.2000E-03							
	U-235	activity pCi/g		activity mBq	activity mCi	activity Ci	SNM	source	
15900		1.572E-001	2.0128E-01	5.3760E-02	1.4530E-03	1.4530E-06	grams	kg	0.781
grams		spec activity					6.6044E-01	6.6044E-04	
7218600		2.2000E-06							
	U-238	activity pCi/g		activity mBq	activity mCi	activity Ci	SNM	source	
15900		1.258E+000	1.6977E+00	4.5344E-01	1.2255E-02	1.2255E-05	grams	kg	0.741
grams		spec activity					3.6044E+01	3.6044E-02	
7218600		3.4000E-07							

Totals for all flag 1 data

		activity pCi/g	corrected	activity mBq	activity mCi	activity Ci	SNM	source	
15900		4.6464E+00	5.3684E+00	1.4454E+00	3.9064E-02	3.9064E-05	grams	kg	flag1 data
			pCi/g	541 will be < than the 540 (MDA not added)			6.6044E-01	6.5562E-02	
126.1904762				data for NORM					
	U-nat	activity pCi/g	corrected pCi/g	activity mBq	activity mCi	activity Ci		source	
		1.4152E+00	1.8990E+00	5.0720E-01	1.3708E-02	1.3708E-05		kg	
		spec activity						1.9307E-02	
		7.1000E-07							

U-nat	activity pCi/g	corrected pCi/g	activity mBq	activity mCi	activity Ci		source	
	4.6464E+00	5.3684E+00	1.4454E+00	3.9064E-02	3.9064E-05		kg total	norm data
							4.8825E-02	

X

container #
9170

b3M

shipping check sheet (For Form 540)

	Ac-227	[redacted]	corrected	activity mBq	activity mCi	activity Ci	SNM	source	
		4.390E-002	4.390E-002	1.3488E-02	3.6453E-04	3.6453E-07	grams	kg	
grams		[redacted]	pCi/g				5.0629E-09	5.0629E-12	
8303660		7.2000E+01							
	Pa-231	[redacted]		activity mBq	activity mCi	activity Ci	SNM	source	
18290		1.945E-001	1.945E-001	5.9757E-02	1.6151E-03	1.6151E-06	grams	kg	
grams		[redacted]					3.4363E-05	3.4363E-08	
8303660		4.7000E-02							
	Ra-223	[redacted]		activity mBq	activity mCi	activity Ci	SNM	source	
18290		5.284E-002	5.284E-002	1.6234E-02	4.3877E-04	4.3877E-07	grams	kg	
grams		[redacted]					8.6032E-12	8.6032E-15	
8303660		5.1000E+04							
	Ra-226	[redacted]		activity mBq	activity mCi	activity Ci	SNM	source	
18290		2.518E-001	1.8281E-01	5.6165E-02	1.5180E-03	1.5180E-06	grams	kg	1.37741
grams		[redacted]					1.5180E-06	1.5180E-09	
8303660		1.0000E+00							
	Ra228	[redacted]		activity mBq	activity mCi	activity Ci	SNM	source	
18290		2.984E-001	4.2326E-01	1.3004E-01	3.5146E-03	3.5146E-06	grams	kg	0.705
grams		[redacted]					1.3017E-08	1.3017E-11	
8303660		2.7000E+02							
	TH-227	[redacted]		activity mBq	activity mCi	activity Ci	SNM	source	
18290		4.390E-002	4.390E-002	1.3488E-02	3.6453E-04	3.6453E-07	grams	kg	
grams		[redacted]					1.1759E-11	1.1759E-14	
8303660		3.1000E+04							
	Th-228	[redacted]		activity mBq	activity mCi	activity Ci	SNM	source	
18290		2.729E-001	4.9286E-01	1.5142E-01	4.0925E-03	4.0925E-06	grams	kg	
grams		[redacted]					4.9909E-09	4.9909E-12	0.55371
8303660		8.2000E+02							
	Th-230	[redacted]		activity mBq	activity mCi	activity Ci	SNM	source	
18290		2.984E-001	2.2141E-01	6.8026E-02	1.8385E-03	1.8385E-06	grams	kg	
grams		[redacted]					8.7549E-05	8.7549E-08	1.34771
8303660		2.1000E-02							
	TH-232	[redacted]		activity mBq	activity mCi	activity Ci	SNM	source	
18290		2.984E-001	4.2326E-01	1.3004E-01	3.5146E-03	3.5146E-06	grams	kg	0.705
grams		[redacted]					3.1951E+01	3.1951E-02	
8303660		1.1000E-07							
	U-234	[redacted]		activity mBq	activity mCi	activity Ci	SNM	source	
18290		1.562E+000	1.3871E+00	4.2615E-01	1.1518E-02	1.1518E-05	grams	kg	1.12613
grams		[redacted]					1.8577E-03	1.8577E-06	
8303660		6.2000E-03							
	U-235	[redacted]		activity mBq	activity mCi	activity Ci	SNM	source	
18290		2.934E-001	3.7567E-01	1.1542E-01	3.1195E-03	3.1195E-06	grams	kg	0.781
grams		[redacted]					1.4179E+00	1.4179E-03	
8303660		2.2000E-06							
	U-238	[redacted]		activity mBq	activity mCi	activity Ci	SNM	source	
18290		1.562E+000	2.1080E+00	6.4764E-01	1.7504E-02	1.7504E-05	grams	kg	0.741
grams		[redacted]					5.1482E+01	5.1482E-02	
8303660		3.4000E-07							

Totals for all flag 1 data

		activity-pCi/g	corrected	activity mBq	activity mCi	activity Ci	SNM	source	
18290		5.1724E+00	5.9055E+00	1.8279E+00	4.9402E-02	4.9402E-05	grams	kg	flag1 data
			pCi/g	541 will be < than the 540 (MDA not added)			1.4179E+00	8.3435E-02	
145.1587302				data for NORM					
	U-[redacted]	activity-pCi/g	corrected pCi/g	activity mBq	activity mCi	activity Ci		source	
		1.8554E+00	2.4836E+00	7.6306E-01	2.0623E-02	2.0623E-05		kg	
		spec activity						2.9047E-02	
		7.1000E-07							

	U-[redacted]	activity-pCi/g	corrected pCi/g	activity mBq	activity mCi	activity Ci		source	
		5.1724E+00	5.9055E+00	1.8279E+00	4.9402E-02	4.9402E-05		kg total	norm data
								[redacted]	

X

container #
9188

shipping check sheet (For Form 540)

	Ac-227	activity	corrected	activity mBq	activity mCi	activity Ci	SNM	source	
		1.056E-001	1.056E-001	2.0701E-02	5.5949E-04	5.5949E-07	grams	kg	
grams		spec activity	pCi/g				7.7707E-09	7.7707E-12	
5298180		7.2000E+01							
	Pa-231	activity		activity mBq	activity mCi	activity Ci	SNM	source	
11670		2.639E-001	2.639E-001	5.1733E-02	1.3982E-03	1.3982E-06	grams	kg	
grams		spec activity					2.9749E-05	2.9749E-08	
5298180		4.7000E-02							
	Ra-223	activity		activity mBq	activity mCi	activity Ci	SNM	source	
11670		4.484E-002	4.484E-002	8.7901E-03	2.3757E-04	2.3757E-07	grams	kg	
grams		spec activity					4.6582E-12	4.6582E-15	
5298180		5.1000E+04							
	Ra-226	activity-pCi/g		activity mBq	activity mCi	activity Ci	SNM	source	
11670		2.264E-001	1.6437E-01	3.2221E-02	8.7084E-04	8.7084E-07	grams	kg	1.37741
grams		spec activity					8.7084E-07	8.7084E-10	
5298180		1.0000E+00							
	Ra228	activity-pCi/g		activity mBq	activity mCi	activity Ci	SNM	source	
11670		2.636E-001	3.7390E-01	7.3297E-02	1.9810E-03	1.9810E-06	grams	kg	0.705
grams		spec activity					7.3370E-09	7.3370E-12	
5298180		2.7000E+02							
	TH-227	activity-pCi/g		activity mBq	activity mCi	activity Ci	SNM	source	
11670		1.056E-001	1.056E-001	2.0701E-02	5.5949E-04	5.5949E-07	grams	kg	
grams		spec activity					1.8048E-11	1.8048E-14	
5298180		3.1000E+04							
	Th-228	activity-pCi/g		activity mBq	activity mCi	activity Ci	SNM	source	
11670		2.418E-001	4.3669E-01	8.5606E-02	2.3137E-03	2.3137E-06	grams	kg	
grams		spec activity					2.8215E-09	2.8215E-12	0.55371
5298180		8.2000E+02							
	Th-230	activity-pCi/g		activity mBq	activity mCi	activity Ci	SNM	source	
11670		2.636E-001	1.9559E-01	3.8342E-02	1.0363E-03	1.0363E-06	grams	kg	
grams		spec activity					4.9347E-05	4.9347E-08	1.34771
5298180		2.1000E-02							
	TH-232	activity-pCi/g		activity mBq	activity mCi	activity Ci	SNM	source	
11670		2.636E-001	3.7390E-01	7.3297E-02	1.9810E-03	1.9810E-06	grams	kg	0.705
grams		spec activity					1.8009E+01	1.8009E-02	
5298180		1.1000E-07							
	U-234	activity-pCi/g		activity mBq	activity mCi	activity Ci	SNM	source	
11670		4.159E-001	3.6932E-01	7.2398E-02	1.9567E-03	1.9567E-06	grams	kg	1.12613
grams		spec activity					3.1560E-04	3.1560E-07	
5298180		6.2000E-03							
	U-235	activity-pCi/g		activity mBq	activity mCi	activity Ci	SNM	source	
11670		1.901E-001	2.4341E-01	4.7716E-02	1.2896E-03	1.2896E-06	grams	kg	0.781
grams		spec activity					5.8619E-01	5.8619E-04	
5298180		2.2000E-06							
	U-238	activity-pCi/g		activity mBq	activity mCi	activity Ci	SNM	source	
11670		4.159E-001	5.6127E-01	1.1003E-01	2.9737E-03	2.9737E-06	grams	kg	0.741
grams		spec activity					8.7462E+00	8.7462E-03	
5298180		3.4000E-07							

Totals for all flag 1 data

		activity-pCi/g	corrected	activity mBq	activity mCi	activity Ci	SNM	source	
11670		2.5008E+00	3.1328E+00	6.3483E-01	1.7158E-02	1.7158E-05	grams	kg	flag1 data
			pCi/g	541 will be < than the 540 (MDA not added)			5.8619E-01	2.6756E-02	
92.61904762				data for NORM					
	U-nat	activity-pCi/g	corrected pCi/g	activity mBq	activity mCi	activity Ci		source	
		6.0600E-01	8.0467E-01	1.5774E-01	4.2633E-03	4.2633E-06		kg	
		spec activity						6.0047E-03	
		7.1000E-07							

U-nat	activity-pCi/g	corrected pCi/g	activity mBq	activity mCi	activity Ci		source	
	2.5008E+00	3.1328E+00	6.3483E-01	1.7158E-02	1.7158E-05		kg total	norm data
							2.4014E-02	

Posillico Bros. Asphalt Co.

1610 New Highway, Farmingdale, N.Y. 11735
Plant Tele: 293-2620, 2621

HOT STORAGE

%9

10:52 4-21-05 TICKET NUMBER 9188

11750 lb GROSS

FORM 540 — Envirocare of Utah, Inc.

UNIFORM LOW-LEVEL RADIOACTIVE WASTE MANIFEST

SHIPPING PAPER

1 EMERGENCY TELEPHONE NUMBER (Include Area Code): 1-800-424-9300

ORGANIZATION: Chemtrec

2. IS THIS AN "EXCLUSIVE USE" SHIPMENT? ☐ YES ☑ NO

3. TOTAL NUMBER OF PACKAGES IDENTIFIED ON THIS MANIFEST: 10

4. DOES EPA REGULATED WASTE REQUIRING A MANIFEST ACCOMPANY THIS SHIPMENT? ☐ YES ☑ NO
If "Yes," provide Manifest Number ==>

EPA MANIFEST NUMBER

5. SHIPPER – NAME AND FACILITY
GTEOSI
140 Cantiague Rock RD
Hicksville, NY 11801

Utah Generator Site Access Permit No.: 020 500 1352

SHIPMENT NUMBER: NHRX-1451

CONTACT: Jean Agostinelli

6. CARRIER – Name and Address
Priority Transport Services, Inc.
391 Anthony Street
Schenectady, NY 12308

CONTACT: Dispatch

SIGNATURE – Authorized carrier acknowledging waste receipt

SHIPPER I.D. NUMBER: 0640-01-985

☐ COLLECTOR
☐ PROCESSOR
☑ GENERATOR TYPE (Specify) I

TELEPHONE NUMBER (Include Area Code): 516-932-9157

EPA I.D. NUMBER: NYR000104976

SHIPPING DATE: 05/19/2005

TELEPHONE (Include Area Code): 800-235-0069

DATE: 5-19-05

7 FORM 540 AND 540A — PAGE 1 OF 3 PAGE(S)
FORM 541 AND 541A — 5 PAGE(S)
FORM 542 AND 542A — None PAGE(S)
ADDITIONAL INFORMATION — None PAGE(S)

8. MANIFEST NUMBER (Use this number on all continuation pages): 0840-01-985

9 CONSIGNEE - Name and Facility
Envirocare of Utah, Inc.
Clive Disposal Site (Bulk Waste Facility)
Interstate 80, Exit 49
Clive, UT 84029

L84893

SIGNATURE – Authorized consignee acknowledging waste receipt

CONTACT: Shipping and Receiving

TELEPHONE (Include Area Code): (435)884-0155

DATE: 6-3-05

10. CERTIFICATION

This is to certify that the herein-named materials are properly classified, described, packaged, marked, and labeled and are in proper condition for transportation according to the applicable regulations of the Department of Transportation. This also certifies that the materials are classified, packaged, marked, and labeled and are in proper condition for transportation and disposal as described in accordance with the requirements of 10 CFR Parts 20 and 61, or equivalent state regulations.

AUTHORIZED SIGNATURE: [signature] TITLE: Broker DATE: 5-19-05

11. U.S. DEPARTMENT OF TRANSPORTATION DESCRIPTION (Including proper shipping name, hazard class, UN ID number, and any additional information)	12 DOT LABEL "RADIOACTIVE"	13 TRANSPORT INDEX	14. PHYSICAL AND CHEMICAL FORM	15 INDIVIDUAL RADIONUCLIDES	16. TOTAL PACKAGE ACTIVITY MBq	mCi	17. LSA/SCO CLASS	18 TOTAL WEIGHT OR VOLUME (Use appropriate units)	19 IDENTIFICATION NUMBER OF PACKAGE
Soil,DOT Non-Regulated, containing Radionuclides	NA	NA	Solid / OXIDES	Ac-227 Pa-231 Ra-223 Ra-226 Ra-228 Th-227 Th-228 Th-230 Th-232 U-234 U-Nat	6.9568E-01	1.8802E-02	NA	16400 LBS; 129.52 FT3	9138
Soil,DOT Non-Regulated, containing Radionuclides	NA	NA	Solid / OXIDES	Ac-227 Pa-231 Ra-223 Ra-226 Ra-228 Th-227 Th-228 Th-230 Th-232 U-234 U-Nat	2.7534E+00	7.4417E-02	NA	22900 LBS; 181.11 FT3	9146
Soil,DOT Non-Regulated, containing Radionuclides	NA	NA	Solid / OXIDES	Ac-227 Pa-231 Ra-223 Ra-226 Ra-228 Th-227 Th-228 Th-230 Th-232 U-234 U-Nat	2.7028E+00	7.3050E-02	NA	17240 LBS; 136.19 FT3	9156

FOR CONSIGNEE USE ONLY

- ___ Record Waste Description Inadequate
- ___ Contamination or Leakage Detected
- ___ Unexpected Exposure Rates Detected
- ___ Labels, Markings, etc. Inadequate
- ___ Container Integrity Inadequate
- ___ Other
- ✓ No Violations Detected on this Shipment

20. TERMS AND CONDITIONS

A. HAZARDOUS MATERIALS: Generator represents & warrants that Waste Material __ is (or) ✓ is not a hazardous waste as defined in 40 CFR 261. Where the material is a hazardous waste, this shipment is also accompanied by a separate and completed hazardous waste manifest, along with the appropriate land-disposal restriction notice and/or certification as required by 40 CFR 268.1.

B. TITLE: Upon acceptance at the disposal site by Envirocare of Utah, Inc., and all appropriate regulatory authorities, title to the Waste Material which conforms to Generator's representations herein shall thereupon transfer from Generator and be vested in Envirocare of Utah, Inc.

C. WASTE MATERIAL: Generator represents and warrants that all data set forth in this (UNIFORM LOW-LEVEL RADIOACTIVE WASTE MANIFEST) are true and correct in all respects and in accordance with all applicable governmental laws, rules, regulations and Envirocare of Utah Inc.'s facility license.

D. INDEMNIFICATION: Generator agrees to indemnify Envirocare of Utah, Inc., its officers, employees and agents against all losses and liability whatsoever if such losses or liability results from the failure of the Waste Material to conform in all material respects to the data supplied on the (UNIFORM LOW-LEVEL RADIOACTIVE WASTE MANIFEST,) or if this shipment fails to meet the standards prescribed by the Department of Transportation or any governmental agency having jurisdiction over such matters.

FORM 540 (04-03)

FORM 540 — **Envirocare of Utah, Inc.**

UNIFORM LOW-LEVEL RADIOACTIVE WASTE MANIFEST

SHIPPING PAPER

1. EMERGENCY TELEPHONE NUMBER (Include Area Code): 1-800-424-9300

ORGANIZATION: Chemtrec

2. IS THIS AN "EXCLUSIVE USE" SHIPMENT? ☐ YES ☑ NO

3. TOTAL NUMBER OF PACKAGES IDENTIFIED ON THIS MANIFEST =====> 10

4. DOES EPA REGULATED WASTE REQUIRING A MANIFEST ACCOMPANY THIS SHIPMENT? ☐ YES ☑ NO
If "Yes," provide Manifest Number =====>

EPA MANIFEST NUMBER

5. SHIPPER -- NAME AND FACILITY
GTEOSI
140 Cantiague Rock RD
Hicksville, NY 11801

SHIPPER I.D. NUMBER: 0840-01-985
☐ COLLECTOR
☐ PROCESSOR
☑ GENERATOR TYPE (Specify) I

Utah Generator Site Access Permit No.: 020 500 1352
SHIPMENT NUMBER: NHRX-1451

CONTACT: Jean Agostinelli
TELEPHONE NUMBER (Include Area Code): 516-932-9157

6. CARRIER -- Name and Address
Priority Transport Services, Inc.
391 Anthony Street
Schenectady, NY 12308

EPA I.D. NUMBER: NYR000104976
SHIPPING DATE: 05/19/2005

CONTACT: Dispatch
TELEPHONE (Include Area Code): 800-235-0069

SIGNATURE – Authorized carrier acknowledging waste receipt
DATE: 5-19-05

7. FORM 540 AND 540A — PAGE 1 OF 3 PAGE(S)
FORM 541 AND 541A — 5 PAGE(S)
FORM 542 AND 542A — None PAGE(S)
ADDITIONAL INFORMATION — None PAGE(S)

8. MANIFEST NUMBER (Use this number on all continuation pages): 0840-01-985

9. CONSIGNEE - Name and Facility
Envirocare of Utah, Inc.
Clive Disposal Site (Bulk Waste Facility)
Interstate 80, Exit 49
Clive, UT 84029

CONTACT: Shipping and Receiving
TELEPHONE (Include Area Code): (435)884-0155

SIGNATURE – Authorized consignee acknowledging waste receipt
DATE

10. CERTIFICATION
This is to certify that the herein-named materials are properly classified, described, packaged, marked, and labeled and are in proper condition for transportation according to the applicable regulations of the Department of Transportation. This also certifies that the materials are classified, packaged, marked, and labeled and are in proper condition for transportation and disposal as described in accordance with the requirements of 10 CFR Parts 20 and 61, or equivalent state regulations.

AUTHORIZED SIGNATURE: [signature] TITLE: Broker DATE: 5-19-05

11. U.S. DEPARTMENT OF TRANSPORTATION DESCRIPTION (Including proper shipping name, hazard class, UN ID number, and any additional information)	12. DOT LABEL "RADIOACTIVE"	13. TRANSPORT INDEX	14. PHYSICAL AND CHEMICAL FORM	15. INDIVIDUAL RADIONUCLIDES	16. TOTAL PACKAGE ACTIVITY MBq	16. TOTAL PACKAGE ACTIVITY mCi	17. LSA/SCO CLASS	18. TOTAL WEIGHT OR VOLUME (Use appropriate units)	19. IDENTIFICATION NUMBER OF PACKAGE
Soil,DOT Non-Regulated, containing Radionuclides	NA	NA	Solid / OXIDES	Ac-227 Pa-231 Ra-223 Ra-226 Ra-228 Th-227 Th-228 Th-230 Th-232 U-234 U-Nat	6.9568E-01	1.8802E-02	NA	16400 LBS; 129.52 FT3	9138
Soil,DOT Non-Regulated, containing Radionuclides	NA	NA	Solid / OXIDES	Ac-227 Pa-231 Ra-223 Ra-226 Ra-228 Th-227 Th-228 Th-230 Th-232 U-234 U-Nat	2.7534E+00	7.4417E-02	NA	22900 LBS; 181.11 FT3	9146
Soil,DOT Non-Regulated, containing Radionuclides	NA	NA	Solid / OXIDES	Ac-227 Pa-231 Ra-223 Ra-226 Ra-228 Th-227 Th-228 Th-230 Th-232 U-234 U-Nat	2.7028E+00	7.3050E-02	NA	17240 LBS; 136.19 FT3	9156

FOR CONSIGNEE USE ONLY

____ Record Waste Description Inadequate
____ Contamination or Leakage Detected
____ Unexpected Exposure Rates Detected
____ Labels, Markings, etc. Inadequate
____ Container Integrity Inadequate
____ Other
____ No Violations Detected on this Shipment

20. TERMS AND CONDITIONS

A. HAZARDOUS MATERIALS: Generator represents & warrants that Waste Material __ is (or) ✓ is not a hazardous waste as defined in 40 CFR 261. Where the material is a hazardous waste, this shipment is also accompanied by a separate and completed hazardous waste manifest, along with the appropriate land-disposal restriction notice and/or certification as required by 40 CFR 268.1.

B. TITLE: Upon acceptance at the disposal site by Envirocare of Utah, Inc., and all appropriate regulatory authorities, title to the Waste Material which conforms to Generator's representations herein shall thereupon transfer from Generator and be vested in Envirocare of Utah, Inc.

C. WASTE MATERIAL: Generator represents and warrants that all data set forth in this (UNIFORM LOW-LEVEL RADIOACTIVE WASTE MANIFEST) are true and correct in all respects and in accordance with all applicable governmental laws, rules, regulations and Envirocare of Utah Inc.'s facility license.

D. INDEMNIFICATION: Generator agrees to indemnify Envirocare of Utah, Inc., its officers, employees and agents against all losses and liability whatsoever if such losses or liability results from the failure of the Waste Material to conform in all material respects to the data supplied on the (UNIFORM LOW-LEVEL RADIOACTIVE WASTE MANIFEST,) or if this shipment fails to meet the standards prescribed by the Department of Transportation or any governmental agency having jurisdiction over such matters.

FORM 540A

Envirocare of Utah, Inc.

UNIFORM LOW-LEVEL RADIOACTIVE WASTE MANIFEST

SHIPPING PAPER (CONTINUATION)

8. MANIFEST NUMBER
(Use this number on all continuation pages)
0840-01-985

11. U.S. DEPARTMENT OF TRANSPORTATION DESCRIPTION (Including proper shipping name, hazard class, UN ID number, and any additional information)	12. DOT LABEL "RADIOACTIVE"	13. TRANSPORT INDEX	14. PHYSICAL AND CHEMICAL FORM	15. INDIVIDUAL RADIONUCLIDES				16. TOTAL PACKAGE ACTIVITY MBq	mCi	17. LSA/SCO CLASS	18. TOTAL WEIGHT OR VOLUME (Use appropriate units)	19. IDENTIFICATION NUMBER OF PACKAGE
Soil,DOT Non-Regulated, containing Radionuclides	NA	NA	Solid / OXIDES	Ac-227	Pa-231	Ra-223	Ra-226	5.9240E+01	1.6011E+00	NA	17050 LBS; 134.68 FT3	9157
				Ra-228	Th-227	Th-228	Th-230					
				Th-232	U-234	U-Nat						
Soil,DOT Non-Regulated, containing Radionuclides	NA	NA	Solid / OXIDES	Ac-227	Pa-231	Ra-223	Ra-226	5.7677E-01	1.5588E-02	NA	12460 LBS; 98.25 FT3	9198
				Ra-228	Th-227	Th-228	Th-230					
				Th-232	U-234	U-Nat						
Soil,DOT Non-Regulated, containing Radionuclides	NA	NA	Solid / OXIDES	Ac-227	Pa-231	Ra-223	Ra-226	1.9092E+00	5.1601E-02	NA	20110 LBS; 158.97 FT3	9199
				Ra-228	Th-227	Th-228	Th-230					
				Th-232	U-234	U-Nat						
Soil,DOT Non-Regulated, containing Radionuclides	NA	NA	Solid / OXIDES	Ac-227	Pa-231	Ra-223	Ra-226	5.0197E+00	1.3567E-01	NA	19740 LBS; 156.03 FT3	9203
				Ra-228	Th-227	Th-228	Th-230					
				Th-232	U-234	U-Nat						
Soil,DOT Non-Regulated, containing Radionuclides	NA	NA	Solid / OXIDES	Ac-227	Pa-231	Ra-223	Ra-226	1.6011E+00	4.3274E-02	NA	18790 LBS; 148.49 FT3	9207
				Ra-228	Th-227	Th-228	Th-230					
				Th-232	U-234	U-Nat						
Soil,DOT Non-Regulated, containing Radionuclides	NA	NA	Solid / OXIDES	Ac-227	Pa-231	Ra-223	Ra-226	2.5911E+00	7.0029E-02	NA	20780 LBS; 164.29 FT3	9222
				Ra-228	Th-227	Th-228	Th-230					
				Th-232	U-234	U-Nat						
Soil,DOT Non-Regulated, containing Radionuclides	NA	NA	Solid / OXIDES	Ac-227	Pa-231	Ra-223	Ra-226	1.0668E+00	2.8833E-02	NA	21250 LBS; 168.02 FT3	9223
				Ra-228	Th-227	Th-228	Th-230					

FORM 540A

Envirocare of Utah, Inc.

UNIFORM LOW-LEVEL RADIOACTIVE WASTE MANIFEST

SHIPPING PAPER (CONTINUATION)

8. MANIFEST NUMBER
(Use this number on all continuation pages)
0840-01-985

11. U.S. DEPARTMENT OF TRANSPORTATION DESCRIPTION (Including proper shipping name, hazard class, UN ID number, and any additional information)	12. DOT LABEL "RADIOACTIVE"	13. TRANSPORT INDEX	14. PHYSICAL AND CHEMICAL FORM	15. INDIVIDUAL RADIONUCLIDES			16. TOTAL PACKAGE ACTIVITY MBq	mCi	17. LSA/SCO CLASS	18. TOTAL WEIGHT OR VOLUME (Use appropriate units)	19. IDENTIFICATION NUMBER OF PACKAGE
Soil,DOT Non-Regulated, containing Radionuclides	NA	NA	Solid / OXIDES	Th-232	U-234	U-Nat	1.0668E+00	2.8833E-02	NA	21250 LBS; 168.02 FT3	9223

FORM 540A (04-03)

FORM 541

Envirocare of Utah, Inc.

UNIFORM LOW-LEVEL RADIOACTIVE WASTE MANIFEST

CONTAINER AND WASTE DESCRIPTION

Additional Nuclear Regulatory Commission (NRC) Requirements for Control, Transfer and Disposal of Radioactive Waste

1. MANIFEST TOTALS

NUMBER OF PACKAGES/ DISPOSAL CONTAINERS	NET WASTE VOLUME	NET WASTE WEIGHT	SPECIAL NUCLEAR MATERIAL (grams) U-233	U-235	Pu	Total
10	m3 41.7830 ft3 1475.5500	kg 84331.8991 ton 92.9600	NP	NP	NP	NP

ACTIVITY	ALL NUCLIDES	TRITIUM	C-14	Tc-99	I-129	SOURCE (kg)	
MBq	7.7159E+01	NP	NP	NP	NP	(kg)	2.0734E+00
mCi	2.0854E+00	NP	NP	NP	NP	(tons)	2.2856E-03

2. MANIFEST NUMBER 0840-01-985

3. PAGE 1 OF 5 PAGE(S)

4. SHIPPER NAME GTEOSI

SHIPMENT ID NUMBER 0840-01-985

DISPOSAL CONTAINER DESCRIPTION							WASTE DESCRIPTION FOR EACH WASTE TYPE IN CONTAINER										
5. CONTAINER IDENTIFICATION NUMBER/ GENERATOR ID NUMBER(S)	6. CONTAINER DESCRIPTION (See Note 1 & Note 1A)	7. VOLUME (m3)/(ft3)	8. WASTE AND CONTAINER WEIGHT (kg)/(ton)	9. SURFACE RADIATION LEVEL (mSv/hr)/(mrem/hr)	10. SURFACE CONTAMINATION (MBq/100 cm2)/(dpm/100cm2) ALPHA	BETA-GAMMA	PHYSICAL DESCRIPTION 11. WASTE DESCRIPTOR (See Note 2 & Note 2A)	12. APPROXIMATE WASTE VOLUME(S) IN CONTAINER (m3)/(FT3)	13. SOLIDIFICATION OR STABILIZATION MEDIA (See Note 3)	14. CHEMICAL DESCRIPTION CHEMICAL FORM/ CHELATING AGENT	WEIGHT % CHELATING AGENT IF > 0.1%	15. RADIOLOGICAL DESCRIPTION INDIVIDUAL RADIONUCLIDES AND ACTIVITY (MBq) AND CONTAINER TOTAL; OR CONTAINER TOTAL ACTIVITY AND RADIONUCLIDE PERCENT: RADIONUCLIDES	pCi/gm	MBq	mCi	16. WASTE CLASSIFICATION AS-Class A Stable AU-Class A Unstable B-Class B C-Class C
9138/GTEOSI	19 Strong Tight Container Loaded in Gondola	3.6676	7438.9154	0.0001	<3.6740E-06	<3.6740E-05	22,59-CONCRETE,59 -MISC DEBRIS-HJ	3.6676	100	OXIDES/NONE	0.00	Ac-227	4.91900E-02	(1.3485E-02)	(3.6446E-04)	AU
		129.5200	8.2000	0.0100	<2.2000E+02	<2.2000E+03		129.5200				Pa-231	1.95800E-01	(5.3676E-02)	(1.4507E-03)	
												Ra-223	5.30500E-02	1.4543E-02	3.9306E-04	
												Ra-226	1.33729E-01	3.6661E-02	9.9084E-04	
												Ra-228	4.10638E-01	1.1257E-01	3.0425E-03	
												Th-227 [1.1757E-14 kg]	4.91900E-02	(1.3485E-02)	(3.6446E-04)	
												Th-228 [3.4481E-12 kg]	3.81608E-01	1.0461E-01	2.8274E-03	
												Th-230 [7.5790E-08 kg]	2.14809E-01	5.8889E-02	1.5916E-03	
												Th-232 [2.7659E-02 kg]	4.10638E-01	1.1257E-01	3.0425E-03	
												U-234 [2.7697E-07 kg]	2.31767E-01	(6.3536E-02)	(1.7172E-03)	
												U-Nat [4.2497E-03 kg]	4.07233E-01	(1.1164E-01)	(3.0173E-03)	
												Subtotal		4.3984E-01	1.1888E-02	
												Total		4.3984E-01	1.1888E-02	
												Source [3.1909E-02 kg]				
9146/GTEOSI	19 Strong Tight Container Loaded in Gondola	5.1285	10387.2660	0.0001	<3.6740E-06	<3.6740E-05	22,59-CONCRETE,59 -MISC DEBRIS-HJ	5.1285	100	OXIDES/NONE	0.00	Ac-227	7.70600E-02	2.9539E-02	7.9836E-04	AU
		181.1100	11.4500	0.0100	<2.2000E+02	<2.2000E+03		181.1100				Pa-231	4.84300E-01	1.8565E-01	5.0175E-03	
												Ra-223	5.01700E-02	1.9232E-02	5.1978E-04	
												Ra-226	2.23390E-01	8.5633E-02	2.3144E-03	
												Ra-228	5.55461E-01	2.1292E-01	5.7547E-03	
												Th-227 [2.5754E-14 kg]	7.70600E-02	2.9539E-02	7.9836E-04	
												Th-228 [8.5658E-12 kg]	6.77972E-01	2.5989E-01	7.0240E-03	
												Th-230 [1.4335E-07 kg]	2.90567E-01	1.1138E-01	3.0104E-03	
												Th-232 [5.2316E-02 kg]	5.55461E-01	2.1292E-01	5.7547E-03	

Note 1: Container Description Codes. For containers/ waste requiring disposal in approved structural over-packs the numerical code must be followed by "-OP."

1. Wooden Box or Crate
2. Metal Box
3. Plastic Drum or Pail
4. Metal Drum or Pail
5. Metal Tank or Liner
6. Concrete Tank or Liner
7. Polyethlene Tank or Liner
8. Fiberglass Tank or Liner
9. Demineralizer
10. Gas Cylinder
11. Bulk, Unpackaged Waste
12. Unpackaged Components
13. High Integrity Container
19. Other. Describe in Item 6, or additional page

Note 1A: Bulk Packaging Description Codes. (Choose one code as may be applicable.)

A Gondola
B Intermodal
C End-Dump
D Roll-off
E Seavan

NOTE 2: Waste Descriptor Codes. (Choose up to three which predominate by volume.)

20. Charcoal
21. Incinerator Ash
22. Soil
23. Gas
24. Oil
25. Aqueous Liquid
26. Filter Media
27. Mechanical Filter
28. EPA or State Hazardous
29. Demolition Rubble
30. Cation Ion-exchange Media
31. Anion Ion-exchange Media
32. Mixed Bed Ion-exchange Media
33. Contaminated Equipment
34. Organic Liquid (except oil)
35. Glassware or Labware
36. Sealed Source/Device
37. Paint or Plating
38. Evaporator Bottoms/Sludges/ Concentrates
39. Compactible Trash
40. Noncompactible Trash
41. Animal Carcass
42. Biological Material (except animal carcass)
43. Activated Material
59. Other. Describe in item 11, or additional page

NOTE 2A: Specific Waste Descriptions (Choose all applicable codes.)

G Dewatered
H Solid
I Combustible
J Non-combustible
K Air Filtration Filters
L Asbestos

Note3: Solidification and Stabilization Media Codes. (Choose up to three which predominate by volume.) For media meeting disposal site structural stability requirements, the numerical code must be followed by "-S." and the media vendor and brand name must also be identified in Item 13. Code 100=NONE REQUIRED.

Solidification

90. Cement
91. Concrete (encapsulation)
92. Bitumen
93. Vinyl Chloride
94. Vinyl Ester Styrene
99. Other. Describe in item 13, or additional page
100. None Required.

FORM 541 (04-03)

FORM 541A

UNIFORM LOW-LEVEL RADIOACTIVE WASTE MANIFEST

CONTAINER AND WASTE DESCRIPTION (CONTINUATION)

Envirocare of Utah, Inc.

2. MANIFEST NUMBER 0840-01-985

DISPOSAL CONTAINER DESCRIPTION							WASTE DESCRIPTION FOR EACH WASTE TYPE IN CONTAINER									
5. CONTAINER IDENTIFICATION NUMBER/ GENERATOR ID NUMBER(S)	6. CONTAINER DESCRIPTION (See Note 1 & Note 1A)	7. VOLUME (m3)/(ft3)	8. WASTE AND CONTAINER WEIGHT (kg)/(ton)	9. SURFACE RADIATION LEVEL (mSv/hr)/(mrem/hr)	10. SURFACE CONTAMINATION (MBq/100 cm2)/(dpm/100cm2) ALPHA	BETA-GAMMA	PHYSICAL DESCRIPTION 11. WASTE DESCRIPTOR (See Note 2 & Note 2A)	12. APPROXIMATE WASTE VOLUME(S) IN CONTAINER (m3)/(FT3)	13. SOLIDIFICATION OR STABILIZATION MEDIA (See Note 3)	14. CHEMICAL DESCRIPTION CHEMICAL FORM/ CHELATING AGENT	WEIGHT % CHELATING AGENT IF > 0.1%	15. RADIOLOGICAL DESCRIPTION INDIVIDUAL RADIONUCLIDES AND ACTIVITY (MBq) AND CONTAINER TOTAL; OR CONTAINER TOTAL ACTIVITY AND RADIONUCLIDE PERCENT: RADIONUCLIDES	pCi/gm	MBq	mCi	16. WASTE CLASSIFICATION AS-Class A Stable AU-Class A Unstable B-Class B C-Class C
												U-234 [2.5938E-06 kg]	1.55222E+00	5.9500E-01	1.6081E-02	
												U-Nat [3.8512E-02 kg]	2.63926E+00	1.0117E+00	2.7343E-02	
												Subtotal		2.7534E+00	7.4416E-02	
												Total		2.7534E+00	7.4416E-02	
												Source [9.0830E-02 kg]				
9156/GTEOSI	19 Strong Tight Container Loaded in Gondola	3.8565	7819.9330	0.0001	<3.6740E-06	<3.6740E-05	22,59-CONCRETE,59 -MISC DEBRIS-HJ	3.8565	100	OXIDES/NONE	0.00	Ac-227	7.18900E-02	2.0723E-02	5.6007E-04	AU
												Pa-231	2.44900E-01	(7.0592E-02)	(1.9079E-03)	
		136.1900	8.6200	0.0100	<2.2000E+02	<2.2000E+03		136.1900				Ra-223	6.61600E-02	1.9071E-02	5.1543E-04	
												Ra-226	2.61796E-01	7.5465E-02	2.0396E-03	
												Ra-228	7.43688E-01	2.1437E-01	5.7938E-03	
												Th-227 [1.8067E-14 kg]	7.18900E-02	2.0723E-02	5.6007E-04	
												Th-228 [8.0044E-12 kg]	8.42499E-01	2.4285E-01	6.5636E-03	
												Th-230 [1.4432E-07 kg]	3.89030E-01	1.1214E-01	3.0308E-03	
												Th-232 [5.2671E-02 kg]	7.43688E-01	2.1437E-01	5.7938E-03	
												U-234 [2.8442E-06 kg]	2.26350E+00	6.5246E-01	1.7634E-02	
												U-Nat [4.0353E-02 kg]	3.67759E+00	1.0601E+00	2.8651E-02	
												Subtotal		2.6323E+00	7.1142E-02	
												Total		2.6323E+00	7.1142E-02	
												Source [9.3027E-02 kg]				
9157/GTEOSI	19 Strong Tight Container Loaded in Gondola	3.8137	7733.7504	0.0001	<3.6740E-06	<3.6740E-05	22,59-CONCRETE,59 -MISC DEBRIS-HJ	3.8137	100	OXIDES/NONE	0.00	Ac-227	1.09700E-01	(3.1271E-02)	(8.4517E-04)	AU
												Pa-231	1.15900E+00	3.3039E-01	8.9294E-03	
		134.6800	8.5250	0.0100	<2.2000E+02	<2.2000E+03		134.6800				Ra-223	9.88200E-02	(2.8170E-02)	(7.6135E-04)	
												Ra-226	2.43137E-01	6.9308E-02	1.8732E-03	
												Ra-228	1.40156E+00	3.9953E-01	1.0798E-02	
												Th-227 [2.7264E-14 kg]	1.09700E-01	(3.1271E-02)	(8.4517E-04)	
												Th-228 [1.2889E-11 kg]	1.37184E+00	3.9105E-01	1.0569E-02	
												Th-230 [2.6898E-07 kg]	7.33170E-01	2.0900E-01	5.6486E-03	
												Th-232 [9.8165E-02 kg]	1.40156E+00	3.9953E-01	1.0798E-02	
												U-234 [9.6277E-05 kg]	7.74777E+01	2.2086E+01	5.9692E-01	
												U-Nat [1.3424E+00 kg]	1.23709E+02	3.5265E+01	9.5310E-01	
												Subtotal		5.9150E+01	1.5986E+00	
												Total		5.9150E+01	1.5986E+00	

FORM 541A

UNIFORM LOW-LEVEL RADIOACTIVE WASTE MANIFEST

CONTAINER AND WASTE DESCRIPTION (CONTINUATION)

Envirocare of Utah, Inc.

2. MANIFEST NUMBER 0840-01-985

DISPOSAL CONTAINER DESCRIPTION							WASTE DESCRIPTION FOR EACH WASTE TYPE IN CONTAINER									
							PHYSICAL DESCRIPTION			14. CHEMICAL DESCRIPTION		15. RADIOLOGICAL DESCRIPTION				
5. CONTAINER IDENTIFICATION NUMBER/ GENERATOR ID NUMBER(S)	6. CONTAINER DESCRIPTION (See Note 1 & Note 1A)	7. VOLUME (m3)/(ft3)	8. WASTE AND CONTAINER WEIGHT (kg)/(ton)	9. SURFACE RADIATION LEVEL (mSv/hr)/(mrem/hr)	10. SURFACE CONTAMINATION (MBq/100 cm2)/(dpm/100cm2) ALPHA	BETA-GAMMA	11. WASTE DESCRIPTOR (See Note 2 & Note 2A)	12. APPROXIMATE WASTE VOLUME(S) IN CONTAINER (m3)/(FT3)	13. SOLIDIFICATION OR STABILIZATION MEDIA (See Note 3)	CHEMICAL FORM/ CHELATING AGENT	WEIGHT % CHELATING AGENT IF > 0.1%	INDIVIDUAL RADIONUCLIDES AND ACTIVITY (MBq) AND CONTAINER TOTAL; OR CONTAINER TOTAL ACTIVITY AND RADIONUCLIDE PERCENT: RADIONUCLIDES	pCi/gm	MBq	mCi	16. WASTE CLASSIFICATION AS-Class A Stable AU-Class A Unstable B-Class B C-Class C
												Source [1.4407E+00 kg]				
9198/GTEOSI	19 Strong Tight Container Loaded in Gondola	2.7821	5651.7613	0.0001	<3.6740E-06	<3.6740E-05	22,59-CONCRETE,59 -MISC DEBRIS-HJ	2.7821	100	OXIDES/NONE	0.00	Ac-227	6.76400E-02	1.4066E-02	3.8017E-04	AU
												Pa-231	1.60500E-01	(3.3377E-02)	(9.0209E-04)	
												Ra-223	9.34900E-02	1.9442E-02	5.2546E-04	
		98.2500	6.2300	0.0060	<2.2000E+02	<2.2000E+03		98.2500				Ra-226	1.62188E-01	3.3728E-02	9.1158E-04	
												Ra-228	4.18723E-01	8.7076E-02	2.3534E-03	
												Th-227 [1.2264E-14 kg]	6.76400E-02	1.4066E-02	3.8017E-04	
												Th-228 [3.6914E-12 kg]	5.38549E-01	1.1200E-01	3.0269E-03	
												Th-230 [5.8624E-08 kg]	2.19038E-01	4.5551E-02	1.2311E-03	
												Th-232 [2.1395E-02 kg]	4.18723E-01	8.7076E-02	2.3534E-03	
												U-234 [2.1003E-07 kg]	2.31678E-01	(4.8181E-02)	(1.3022E-03)	
												U-Nat [3.1294E-03 kg]	3.95318E-01	(8.2210E-02)	(2.2219E-03)	
												Subtotal		4.1301E-01	1.1162E-02	
												Total		4.1301E-01	1.1162E-02	
												Source [2.4525E-02 kg]				
9199/GTEOSI	19 Strong Tight Container Loaded in Gondola	4.5015	9121.7432	0.0001	<3.6740E-06	<3.6740E-05	22,59-CONCRETE,59 -MISC DEBRIS-HJ	4.5015	100	OXIDES/NONE	0.00	Ac-227	4.76700E-02	(1.6039E-02)	(4.3349E-04)	AU
												Pa-231	1.77600E-01	(5.9755E-02)	(1.6150E-03)	
												Ra-223	3.93300E-02	(1.3233E-02)	(3.5765E-04)	
		158.9700	10.0550	0.0050	<2.2000E+02	<2.2000E+03		158.9700				Ra-226	1.80048E-01	6.0580E-02	1.6373E-03	
												Ra-228	4.98865E-01	1.6785E-01	4.5365E-03	
												Th-227 [1.3984E-14 kg]	4.76700E-02	(1.6039E-02)	(4.3349E-04)	
												Th-228 [6.7935E-12 kg]	6.12595E-01	2.0612E-01	5.5707E-03	
												Th-230 [1.1300E-07 kg]	2.60961E-01	8.7805E-02	2.3731E-03	
												Th-232 [4.1241E-02 kg]	4.98865E-01	1.6785E-01	4.5365E-03	
												U-234 [1.7401E-06 kg]	1.18636E+00	3.9916E-01	1.0788E-02	
												U-Nat [2.7210E-02 kg]	2.12448E+00	7.1480E-01	1.9319E-02	
												Subtotal		1.8042E+00	4.8761E-02	
												Total		1.8042E+00	4.8761E-02	
												Source [6.8453E-02 kg]				

FORM 541A

UNIFORM LOW-LEVEL RADIOACTIVE WASTE MANIFEST

CONTAINER AND WASTE DESCRIPTION (CONTINUATION)

Envirocare of Utah, Inc.

2. MANIFEST NUMBER 0840-01-985

DISPOSAL CONTAINER DESCRIPTION							WASTE DESCRIPTION FOR EACH WASTE TYPE IN CONTAINER									
							PHYSICAL DESCRIPTION			14. CHEMICAL DESCRIPTION		15. RADIOLOGICAL DESCRIPTION				16. WASTE CLASSIFICATION AS-Class A Stable AU-Class A Unstable B-Class B C-Class C
5. CONTAINER IDENTIFICATION NUMBER/ GENERATOR ID NUMBER(S)	6. CONTAINER DESCRIPTION (See Note 1 & Note 1A)	7. VOLUME (m3)/(ft3)	8. WASTE AND CONTAINER WEIGHT (kg)/(ton)	9. SURFACE RADIATION LEVEL (mSv/hr)/(mrem/hr)	10. SURFACE CONTAMINATION (MBq/100 cm2)/(dpm/100cm2) ALPHA	BETA-GAMMA	11. WASTE DESCRIPTOR (See Note 2 & Note 2A)	12. APPROXIMATE WASTE VOLUME(S) IN CONTAINER (m3)/(FT3)	13. SOLIDIFICATION OR STABILIZATION MEDIA (See Note 3)	CHEMICAL FORM/ CHELATING AGENT	WEIGHT % CHELATING AGENT IF > 0.1%	INDIVIDUAL RADIONUCLIDES AND ACTIVITY (MBq) AND CONTAINER TOTAL; OR CONTAINER TOTAL ACTIVITY AND RADIONUCLIDE PERCENT: RADIONUCLIDES	pCi/gm	MBq	mCi	
9203/GTEOSI	19 Strong Tight Container Loaded in Gondola	4.4183	8953.9140	0.0001	<3.6740E-06	<3.6740E-05	22,59-CONCRETE,59 -MISC DEBRIS-HJ	4.4183	100	OXIDES/NONE	0.00	Ac-227	5.84400E-02	(1.9300E-02)	(5.2161E-04)	AU
		156.0300	9.8700	0.0080	<2.2000E+02	<2.2000E+03		156.0300				Pa-231	5.05600E-01	1.6697E-01	4.5128E-03	
												Ra-223	6.21700E-02	(2.0532E-02)	(5.5491E-04)	
												Ra-226	2.45606E-01	8.1111E-02	2.1922E-03	
												Ra-228	7.99433E-01	2.6401E-01	7.1355E-03	
												Th-227 [1.6826E-14 kg]	5.84400E-02	(1.9300E-02)	(5.2161E-04)	
												Th-228 [9.2000E-12 kg]	8.45208E-01	2.7913E-01	7.5440E-03	
												Th-230 [1.7774E-07 kg]	4.18191E-01	1.3811E-01	3.7326E-03	
												Th-232 [6.4868E-02 kg]	7.99433E-01	2.6401E-01	7.1355E-03	
												U-234 [6.3523E-06 kg]	4.41246E+00	1.4572E+00	3.9384E-02	
												U-Nat [8.7932E-02 kg]	6.99466E+00	2.3100E+00	6.2432E-02	
												Subtotal		4.9605E+00	1.3407E-01	
												Total		4.9605E+00	1.3407E-01	
												Source [1.5281E-01 kg]				
9207/GTEOSI	19 Strong Tight Container Loaded in Gondola	4.2048	8523.0012	0.0001	<3.6740E-06	<3.6740E-05	22,59-CONCRETE,59 -MISC DEBRIS-HJ	4.2048	100	OXIDES/NONE	0.00	Ac-227	2.66800E-02	(8.3853E-03)	(2.2663E-04)	AU
		148.4900	9.3950	0.0060	<2.2000E+02	<2.2000E+03		148.4900				Pa-231	1.22400E-01	(3.8469E-02)	(1.0397E-03)	
												Ra-223	8.06000E-02	2.5332E-02	6.8464E-04	
												Ra-226	1.10642E-01	3.4774E-02	9.3983E-04	
												Ra-228	2.25390E-01	7.0837E-02	1.9145E-03	
												Th-227 [7.3106E-15 kg]	2.66800E-02	(8.3853E-03)	(2.2663E-04)	
												Th-228 [2.4377E-12 kg]	2.35322E-01	7.3959E-02	1.9989E-03	
												Th-230 [4.7691E-08 kg]	1.17904E-01	3.7056E-02	1.0015E-03	
												Th-232 [1.7405E-02 kg]	2.25390E-01	7.0837E-02	1.9145E-03	
												U-234 [1.9770E-06 kg]	1.44300E+00	4.5351E-01	1.2257E-02	
												U-Nat [2.9676E-02 kg]	2.48043E+00	7.7959E-01	2.1070E-02	
												Subtotal		1.5459E+00	4.1781E-02	
												Total		1.5459E+00	4.1781E-02	
												Source [4.7083E-02 kg]				
9222/GTEOSI	19 Strong Tight Container Loaded in Gondola	4.6522	9425.6501	0.0001	<3.6740E-06	<3.6740E-05	22,59-CONCRETE,59 -MISC DEBRIS-HJ	4.6522	100	OXIDES/NONE	0.00	Ac-227	4.47300E-02	(1.5553E-02)	(4.2036E-04)	AU
		164.2900	10.3900	0.0050	<2.2000E+02	<2.2000E+03		164.2900				Pa-231	3.26100E-01	1.1339E-01	3.0646E-03	
												Ra-223	3.89700E-02	(1.3551E-02)	(3.6623E-04)	
												Ra-226	2.13008E-01	7.4067E-02	2.0018E-03	
												Ra-228	4.65957E-01	1.6202E-01	4.3790E-03	

FORM 541A

UNIFORM LOW-LEVEL RADIOACTIVE WASTE MANIFEST

CONTAINER AND WASTE DESCRIPTION (CONTINUATION)

Envirocare of Utah, Inc.

2. MANIFEST NUMBER 0840-01-985

DISPOSAL CONTAINER DESCRIPTION							WASTE DESCRIPTION FOR EACH WASTE TYPE IN CONTAINER									
5. CONTAINER IDENTIFICATION NUMBER/ GENERATOR ID NUMBER(S)	6. CONTAINER DESCRIPTION (See Note 1 & Note 1A)	7. VOLUME (m3)/(ft3)	8. WASTE AND CONTAINER WEIGHT (kg)/(ton)	9. SURFACE RADIATION LEVEL (mSv/hr)/(mrem/hr)	10. SURFACE CONTAMINATION (MBq/100 cm2)/(dpm/100cm2) ALPHA	BETA-GAMMA	PHYSICAL DESCRIPTION 11. WASTE DESCRIPTOR (See Note 2 & Note 2A)	12. APPROXIMATE WASTE VOLUME(S) IN CONTAINER (m3)/(FT3)	13. SOLIDIFICATION OR STABILIZATION MEDIA (See Note 3)	14. CHEMICAL DESCRIPTION CHEMICAL FORM/ CHELATING AGENT	WEIGHT % CHELATING AGENT IF > 0.1%	15. RADIOLOGICAL DESCRIPTION INDIVIDUAL RADIONUCLIDES AND ACTIVITY (MBq) AND CONTAINER TOTAL; OR CONTAINER TOTAL ACTIVITY AND RADIONUCLIDE PERCENT: RADIONUCLIDES	pCi/gm	MBq	mCi	16. WASTE CLASSIFICATION AS-Class A Stable AU-Class A Unstable B-Class B C-Class C
												Th-227 [1.3560E-14 kg]	4.47300E-02	(1.5553E-02)	(4.2036E-04)	
												Th-228 [6.6524E-12 kg]	5.80448E-01	2.0183E-01	5.4549E-03	
												Th-230 [1.0908E-07 kg]	2.43747E-01	8.4756E-02	2.2907E-03	
												Th-232 [3.9809E-02 kg]	4.65957E-01	1.6202E-01	4.3790E-03	
												U-234 [2.8078E-06 kg]	1.85236E+00	6.4410E-01	1.7408E-02	
												U-Nat [4.2034E-02 kg]	3.17568E+00	1.1042E+00	2.9844E-02	
												Subtotal		2.5464E+00	6.8822E-02	
												Total		2.5464E+00	6.8822E-02	
												Source [8.1846E-02 kg]				
9223/GTEOSI	19 Strong Tight Container Loaded in Gondola	4.7578	9638.8385	0.0001	<3.6740E-06	<3.6740E-05	22,59-CONCRETE,59 -MISC DEBRIS-HJ	4.7578	100	OXIDES/NONE	0.00	Ac-227	3.33300E-02	(1.1853E-02)	(3.2034E-04)	AU
		168.0200	10.6250	0.0060	<2.2000E+02	<2.2000E+03		168.0200				Pa-231	3.47400E-01	1.2354E-01	3.3389E-03	
												Ra-223	1.43700E-01	5.1101E-02	1.3811E-03	
												Ra-226	9.78648E-02	3.4802E-02	9.4060E-04	
												Ra-228	3.71915E-01	1.3226E-01	3.5745E-03	
												Th-227 [1.0334E-14 kg]	3.33300E-02	(1.1853E-02)	(3.2034E-04)	
												Th-228 [3.7446E-12 kg]	3.19481E-01	1.1361E-01	3.0706E-03	
												Th-230 [8.9042E-08 kg]	1.94552E-01	6.9186E-02	1.8699E-03	
												Th-232 [3.2496E-02 kg]	3.71915E-01	1.3226E-01	3.5745E-03	
												U-234 [5.6425E-07 kg]	3.63990E-01	(1.2944E-01)	(3.4984E-03)	
												U-Nat [9.7796E-03 kg]	7.22442E-01	2.5691E-01	6.9435E-03	
												Subtotal		9.1367E-01	2.4694E-02	
												Total		9.1367E-01	2.4694E-02	
												Source [4.2276E-02 kg]				
Shipment Totals		41.7830	84694.7731									Source [2.0734E+00 kg]		7.7159E+01	2.0854E+00	
		1475.5500	93.3600													

Envirocare of Utah, Inc.

ADDITIONAL NOTES

Manifest Number
0840-01-985
PAGE 1

New York State Waste Transporter Part 364 permit No. 4A-288
New York State Waste Transporter Part 381 permit Number 4A-288

UNIFORM LOW-LEVEL RADIOACTIVE WASTE MANIFEST
ISOTOPES REPORT

For Manifest # 0840-01-985
Envirocare of Utah, Inc.

	Total Activity		
Isotope	**(MBq)**	**(mCi)**	**(Ci)**
Ac-227	1.8022E-01	4.8707E-03	4.8707E-06
Pa-231	1.1758E+00	3.1779E-02	3.1779E-05
Ra-223	2.2421E-01	6.0596E-03	6.0596E-06
Ra-226	5.8613E-01	1.5841E-02	1.5841E-05
Ra-228	1.8235E+00	4.9283E-02	4.9283E-05
Th-227	1.8022E-01	4.8707E-03	4.8707E-06
Th-228	1.9851E+00	5.3650E-02	5.3650E-05
Th-230	9.5387E-01	2.5780E-02	2.5780E-05
Th-232	1.8235E+00	4.9283E-02	4.9283E-05
U-234	2.6529E+01	7.1699E-01	7.1699E-04
U-Nat	4.2696E+01	1.1539E+00	1.1539E-03

ENVIROCARE *OF UTAH, LLC.*

THE SAFE ALTERNATIVE

CERTIFICATE OF DISPOSAL

GTE Operations Support Inc., Irving

This Certificate acknowledges that the following manifested shipments:

Shipment	Disposal Location	Date	Shipment	Disposal Location	Date
0840-01-0977	Class A	06/10/05 11:58:51	0840-01-0981	Class A	06/10/05 11:34:19
0840-01-0982	Class A	06/10/05 11:58:51	0840-01-0983	Class A	06/10/05 11:34:19
0840-01-0984	Class A	06/10/05 10:04:57	0840-01-0985	Class A	06/10/05 10:04:57
0840-01-0986	Class A	06/10/05 11:34:19	0840-04-0029	Class A	06/10/05 11:58:51

Representing 9,190.86 cubic feet of waste has been disposed of at the above listed Disposal Facility. Disposal is subject to Envirocare's Radioactive Material License, all other applicable licenses, permits and regulations, and the Disposal Agreement.

Brent Anderson
Director of LLRW Operations

6/14/05
Date

605 N. 5600 W, Salt Lake City, Utah 84116 Telephone (801) 532-1330

BagNum	MANIFEST GROSS WEIGHT
9203	19740

Shipment Survey

Survey Number: GTEOSI-04 - 10519 Date: 12.13.04 Time: 1558

Waste Container Type: Super Sack Intermodal Other: soil

Waste Container ID #: 9263 Storage Bin: 40L Gross Weight: 19740 lbs

	Ludlum 3030		Ludlum 3030		Ludlum 3030		Ludlum 19
Serial #	190641		191265		N		193615
Probe #	N/A		N/A				N/A
Calibration Due Date:	3-4-05		4-20-05			A	5-19-05
	α	β	α	β	α	β	
Background	0 cpm	25 cpm	0 cpm	25 cpm	N cpm	cpm	6 μR/hr
Efficiency	29 %	25 %	29 %	25 %	%	%	
MDA	25 dpm	130 dpm	25 dpm	130 dpm	dpm	A dpm	

Maximum Contact Dose Rate: .008 mrem/hr Transport Index: 0 mrem/hr

	α cpm	α dpm/100 cm2	β cpm	β dpm/100 cm2
ALARA Limit	N/A	60	N/A	500
Smear #				
1	1	<MDA	29	<MDA
2	1		31	
3	0		32	
4	0		34	
5	0		29	
6	0		28	

Smear Locations: 1 - Bottom 2 - Front 3 - Right Side 4 - Back 5 - Left Side 6 - Top

DEBRA LePage — Debra L Page

Surveyor Name — Surveyor Signature

George Economy

Supervisor Approval

23116-S-DR0129203-05.0

Date: 12/14/04 Time:1718

1-06-05 15:55 Bag# 9203

19740 lb GR

010605 1555 9203 0019740

Shipment Survey

Survey Number: 6TE05I-05-00330 Date: 4-21-05 Time: 11:10

Waste Container Type: (Super Sack) Intermodal Other: Soil

Waste Container ID #: 9222 Storage Bin: — Gross Weight: 20,780 lbs

	Ludlum 3030		Ludlum 3030		Ludlum 3030		Ludlum MoD. 19
Serial #	190646		196165				193615
Probe #	N/A		N/A				N/A
Calibration Due Date:	13 Dec 05		18 July 05		N/A		29 Mar 06
	α	β	α	β	α	β	
Background	0 cpm	25 cpm	0 cpm	25 cpm	cpm	cpm	5 μR/hr
Efficiency	29 %	25 %	29 %	25 %	%	%	
MDA	25 dpm	130 dpm	25 dpm	130 dpm	dpm	dpm	

Maximum Contact Dose Rate: .025 mrem/hr Transport Index: 0 mrem/hr

	α cpm	α dpm/100 cm2	β cpm	β dpm/100 cm2
ALARA Limit	N/A	60	N/A	500
Smear #				
1	0	<MDA	30	<MDA
2	0		28	
3	0		37	
4	0		22	
5	1		24	
6	1	<MDA	33	<MDA

Smear Locations: 1 - Bottom 2 - Front 3 - Right Side 4 - Back 5 - Left Side 6 - Top

George Economus
Surveyor Name

George Economus
Surveyor Signature

Supervisor Approval

27425-S-U06XX9222-99.0
Date: 03/02/05 Time:0841

4-21-05 11:10 Bag# 9222
20780 lb GR
042105 1110 9222 0020780

BagNum	MANIFEST GROSS WEIGHT
9207	18790

Shipm Survey

Survey Number: GTEOSI-05-00312 Date: 1-27-05 Time: 10:42

Waste Container Type: Super Sack Intermodal Other: Waste

Waste Container ID #: 9207 Storage Bin: 42C Gross Weight: 18790 lbs

	Ludlum 3030		Ludlum 3030		Ludlum 3030		Ludlum Mod. 19
Serial #	190646		191265				193615
Probe #	N/A		N/A		N/A		N/A
Calibration Due Date:	12-13-05		4-20-05				19 May 05
	α	β	α	β	α	β	
Background	0 cpm	25 cpm	0 cpm	25 cpm	cpm	cpm	5 μR/hr
Efficiency	29 %	25 %	29 %	25 %	%	N/A %	
MDA	25 dpm	130 dpm	25 dpm	130 dpm	dpm	dpm	

Maximum Contact Dose Rate: 0.006 mrem/hr Transport Index: 0.0 mrem/hr

	α cpm	α dpm/100 cm2	β cpm	β dpm/100 cm2
ALARA Limit	N/A	60	N/A	500
Smear #				
1	0	<MDA	27	<MDA
2	0		28	
3	0		28	
4	0		33	
5	0		36	
6	0	<MDA	28	<MDA

Smear Locations: 1 - Bottom 2 - Front 3 - Right Side 4 - Back 5 - Left Side 6 - Top

George Economos — Surveyor Name

George Economos — Surveyor Signature

Supervisor Approval

24841-S-XXD179207-99.9
Date: 01/26/05 Time:1056

1-27-05 11:42 Bag# 9207
18790 lb GR
012705 1142 9207 0018790

Shipment Survey

Survey Number: GTEOSI-05-00325 Date: 4-18-05 Time: 16:06

Waste Container Type: Super Sack Intermodal Other: soil

Waste Container ID #: 9223 Storage Bin: — Gross Weight: 21,250 lbs

	Ludlum 3030		Ludlum 3030		Ludlum 3030		L-19
Serial #	190646		196165		N		193615
Probe #	N/A		N/A				N/A
Calibration Due Date:	12-13-05		7-18-05				29 Mar 06
	α	β	α	β	α	β	
Background	0 cpm	25 cpm	0 cpm	25 cpm	cpm	cpm	5 μR/hr
Efficiency	29 %	25 %	29 %	25 %	%	%	
MDA	25 dpm	130 dpm	25 dpm	130 dpm	dpm	A dpm	

Maximum Contact Dose Rate: 0.006 mrem/hr Transport Index: 0.0 mrem/hr

	α cpm	α dpm/100 cm2	β cpm	β dpm/100 cm2
ALARA Limit	N/A	60	N/A	500
Smear #				
1	0	CMDA	35	CMDA
2	0		24	
3	1		32	
4	0		20	
5	1		37	
6	0	CMDA	30	CMDA

Smear Locations: 1 - Bottom 2 - Front 3 - Right Side 4 - Back 5 - Left Side 6 - Top

George Economos — Surveyor Name

George Economos — Surveyor Signature

Supervisor Approval

28165-S-XXP699223-99.9

Date: 03/11/05 Time:1446

4-18-05 16:00 Bag# 9223

21250 lb GR

041805 1600 9223 0021250

BagNum	MANIFEST GROSS WEIGHT
9157	17050

Shipment Survey

Survey Number: GTEOSI-04-7579 Date: 10-20-04 Time: 1308

Waste Container Type: Super Sack Intermodal Other: DEBRIS

Waste Container ID #: 9157 Storage Bin: 39 Gross Weight: 17050 lbs

	Ludlum 3030		Ludlum 3030		Ludlum 3030		LMI 125
Serial #	190641		191265				176124
Probe #	N/A		N/A		N/A		N/A
Calibration Due Date:	3-4-05		4-20-05				3-8-05
	α	β	α	β	α	β	
Background	0 cpm	25 cpm	0 cpm	25 cpm	cpm	cpm	5 μR/hr
Efficiency	29 %	25 %	29 %	25 %	N/A %	N/A %	
MDA	25 dpm	130 dpm	25 dpm	130 dpm	dpm	dpm	

Maximum Contact Dose Rate: 0.010 mrem/hr Transport Index: 0 mrem/hr

	α cpm	α dpm/100 cm2	β cpm	β dpm/100 cm2
ALARA Limit	N/A	60	N/A	500
Smear #				
1	0	<MDA	19	<MDA
2	0		24	
3	0		29	
4	0		24	
5	0		30	
6	0		31	

Smear Locations: 1 - Bottom 2 - Front 3 - Right Side 4 - Back 5 - Left Side 6 - Top

S. Eckert
Surveyor Name

Surveyor Signature

George Lunardi
Supervisor Approval

20004-D-DEBRI9157-99.9
Date: 11/01/04 Time:0826

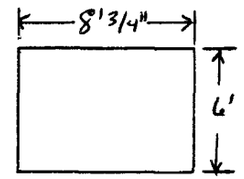

CONTACT 0.010 MREM/HR
1 METER 0.006 MREM/HR

10-20-04 13:08 Bag# 9157
17050 lb GR
102004 1308 9157 0017050

Shipment Survey

y Number: GTEOSI-04-7577 Date: 10-20-04 Time: 1252

Waste Container Type: Super Sack Intermodal Other: NA

Waste Container ID #: 9138 Storage Bin: 40 Gross Weight: 16400 lbs

	Ludlum 3030		Ludlum 3030		Ludlum 3030		2M1125
Serial #	190641		191265				176124
Probe #	N/A		N/A		N/A		N/A
Calibration Due Date:	3-4-05		4-20-05				3-8-05
	α	β	α	β	α	β	
Background	0 cpm	25 cpm	0 cpm	25 cpm	cpm	cpm	5 μR/hr
Efficiency	29 %	25 %	29 %	25 %	N/A %	N/A %	
MDA	25 dpm	130 dpm	25 dpm	130 dpm	dpm	dpm	

Maximum Contact Dose Rate: 0.010 mrem/hr Transport Index: 0 mrem/hr

	α cpm	α dpm/100 cm2	β cpm	β dpm/100 cm2
ALARA Limit	N/A	60	N/A	500
Smear #				
1	0	<MDA	29	<MDA
2	1		31	
3	0		30	
4	0		30	
5	0		29	
6	1		30	

Smear Locations: 1 - Bottom 2 - Front 3 - Right Side 4 - Back 5 - Left Side 6 - Top

S. ECKERT

Surveyor Name Surveyor Signature

John Mytokeff, Sr.

Supervisor Approval

18777-S-LPH169138-99.9

Date: 10/12/04 Time:1138

10-20-04 12:52 Bag# 9138

16400 lb GR

102004 1252 9138 0016400

BagNum	MANIFEST GROSS WEIGHT
9156	17240

Shipment Survey

Survey Number: GTE051-04-7581 Date: 10-26-04 Time: 1312

Waste Container Type: Super Sack Intermodal Other: NA

Waste Container ID #: 9156 Storage Bin: 56 Gross Weight: 17240 lbs

	Ludlum 3030		Ludlum 3030		Ludlum 3030		LMI 19
Serial #	190641		191265				196117
Probe #	N/A		N/A		N/A		N/A
Calibration Due Date:	3-4-05		4-20-05				8-10-05
	α	β	α	β	α	β	
Background	0 cpm	25 cpm	0 cpm	25 cpm	cpm	cpm	6 μR/hr
Efficiency	29 %	25 %	29 %	25 %	N/A %	N/A %	
MDA	25 dpm	130 dpm	25 dpm	130 dpm	dpm	dpm	

Maximum Contact Dose Rate: 0.010 mrem/hr Transport Index: 0 mrem/hr

	α cpm	α dpm/100 cm2	β cpm	β dpm/100 cm2
ALARA Limit	N/A	60	N/A	500
Smear #				
1	0	<MDA	26	<MDA
2	0		37	
3	0		28	
4	0		33	
5	0		30	
6	0		23	

Smear Locations: 1 - Bottom 2 - Front 3 - Right Side 4 - Back 5 - Left Side 6 - Top

S. Eckert
Surveyor Name

Surveyor Signature

John Mitchell, Sr.
Supervisor Approval

19463-S-LPH049156-99.9
Date: 10/21/04 Time:1717

10-26-04 13:12 Bag# 9156
17240 lb GR
102604 1312 9156 0017240

Shipment Survey

Survey Number: TEOSI-05-00337 Date: 5-9-05 Time: 14:00

Waste Container Type: Super Sack Intermodal Other: soil

Waste Container ID #: 9199 Storage Bin: N/A Gross Weight: 20,110 lbs

	Ludlum 3030		Ludlum 3030		Ludlum 3030		L-19
Serial #	190646		196165				196118
Probe #	N/A		N/A		N/A		N/A
Calibration Due Date:	12-13-05		7-18-05				8-10-05
	α	β	α	β	α	β	
Background	0 cpm	25 cpm	0 cpm	25 cpm	cpm	cpm	5 μR/hr
Efficiency	29 %	25 %	29 %	25 %	%	%	
MDA	25 dpm	130 dpm	25 dpm	130 dpm	dpm	dpm	

Maximum Contact Dose Rate: 0.005 mrem/hr Transport Index: 0.0 mrem/hr

	α cpm	α dpm/100 cm2	β cpm	β dpm/100 cm2
ALARA Limit	N/A	60	N/A	500
Smear #				
1	0	<MDA	0	<MDA
2	0		0	
3	0		0	
4	0		3	
5	0		0	
6	0	<MDA	0	<MDA

Smear Locations: 1 - Bottom 2 - Front 3 - Right Side 4 - Back 5 - Left Side 6 - Top

JAMES WELLS — James Wells

Surveyor Name — Surveyor Signature

George Economos

Supervisor Approval

5-10-05 7:54 Bag# 9199

20110 lb GR

051005 0754 9199 0020110

30820-S-DRG129199-99.9

Date: 05/04/05 Time:1146

Shipment Survey

Survey Number: GTEOSI-05-00335 Date: 5-9-05 Time: 11:25

Waste Container Type: (Super Sack) Intermodal Other: soil

Waste Container ID #: 9198 Storage Bin: — Gross Weight: 12,460 lbs

	Ludlum 3030		Ludlum 3030		Ludlum 3030		L-19
Serial #	190646		196165		N		196118
Probe #	N/A		N/A				N/A
Calibration Due Date:	12-13-05		7-18-05				10 Aug 05
	α	β	α	β	α	β	
Background	0 cpm	25 cpm	0 cpm	25 cpm	cpm	cpm	5 μR/hr
Efficiency	29 %	25 %	29 %	25 %	%	%	
MDA	25 dpm	130 dpm	25 dpm	130 dpm	dpm	A dpm	

Maximum Contact Dose Rate: 0.006 mrem/hr Transport Index: 0.0 mrem/hr

	α cpm	α dpm/100 cm2	β cpm	β dpm/100 cm2
ALARA Limit	N/A	60	N/A	500
Smear #				
1	0	LMDA	0	LMDA
2	0		0	
3	0		0	
4	0		4	
5	0		8	
6	0	LMDA	0	LMDA

Smear Locations: 1 - Bottom 2 - Front 3 - Right Side 4 - Back 5 - Left Side 6 - Top

JAMES WELLS — James Wells

Surveyor Name — Surveyor Signature

George Economos

Supervisor Approval

30819-S-XXG149198-99.9

Date: 05/04/05 Time:1110

5-09-05 10:30 Bag# 9198

12460 lb GR

050905 1030 9198 0012460

Shipment Survey

Survey Number: GTEOSI-04-7573 Date: 10-7-04 Time: 1543

Waste Container Type: Super Sack Intermodal Other: N/A

Waste Container ID #: 9146 Storage Bin: 38 Gross Weight: 22900 lbs

	Ludlum 3030		Ludlum 3030		Ludlum 3030		Ludlum 19
Serial #	190641		191265				193615
Probe #	N/A		N/A		N/A		N/A
Calibration Due Date:	3-4-05		4-20-05				5-19-05
	α	β	α	β	α	β	
Background	0 cpm	25 cpm	0 cpm	25 cpm	cpm	cpm	6 μR/hr
Efficiency	29 %	25 %	29 %	25 %	N/A %	N/A %	
MDA	25 dpm	130 dpm	25 dpm	130 dpm	dpm	dpm	

Maximum Contact Dose Rate: 0.010 mrem/hr Transport Index: 0 mrem/hr

	α cpm	α dpm/100 cm2	β cpm	β dpm/100 cm2
ALARA Limit	N/A	60	N/A	500
Smear #				
1	0	<MDA	29	<MDA
2	0		30	
3	2		17	
4	0		24	
5	0		20	
6	1		39	

Smear Locations: 1 - Bottom 2 - Front 3 - Right Side 4 - Back 5 - Left Side 6 - Top

S. ECKERT
Surveyor Name

Surveyor Signature

George Economy
Supervisor Approval

18510-S-LPH169146-04.0
Date: 10/07/04 Time:1413

10-07-04 15:43 Bag# 9146
22900 lb GR
100704 1543 9146 0022900

NYSDEC:V00089-1; URS27010-039

Attachment 5.10
TRANSPORT VEHICLE RELEASE CHECKLIST

Shipment Number- 0840.01-985

Truck Number- 38 & 44

Trailer Number- 125 & 226

A qualified MHF-LS shipping technician shall verify that each item listed is satisfactory and then place a Check Mark in the corresponding box.

1. Driver possesses a valid driver's license with a HAZMAT endorsement ☒
2. Driver possesses a valid copy of a "Research and Special Programs Administration" U.S. DOT Hazmat Registration Certificate ☒
3. If manifested on a Hazardous Waste Manifest, ensure the carrier possesses a current EPA ID # ☒
4. Lamps are operable ☒
   - Headlights and Brights
   - Warning Lights and Flashers
   - Brake Lights
5. Coupling devices are intact ☒
6. Tires are sufficient ☒
   - No fabric is exposed through tread or sidewall
   - Front wheel tires must have tread pattern to a depth of ≥1/8 inch
   - Other tires must have tread pattern to a depth of ≥1/16 inch
   - Re-treaded tires are not authorized
7. Horn is operable ☒
8. Windshield wipers are operable ☒
9. Rear-vision mirrors are adequate (1 on each side) ☒
10. Emergency equipment is on-hand and accessible ☒
    - Fire extinguisher
    - Warning devices- bi-directional emergency reflectors, triangles (3), or liquid burning flares
11. General vehicle integrity is satisfactory ☒
    - Frame appears undamaged
    - Flooring is sufficient to support load
    - If a closed transport vehicle, vehicle is closed
    - Vehicle is otherwise in unimpaired physical condition
12. Vehicle truck and trailer have current DOT inspection stickers on both components (Good for 1 year from date performed) ☒
13. Vehicle is properly placarded (Exclusive Use LSA, Yellow III and HRCQ only) ☒
14. Shoring, strapping, blocking and bracing is adequate to prevent shifting of lading ☒

MHF-LS Qualified Technician Signature _____
Shipment Date 5-19-05

Attachment 5.9
LOADING DIAGRAM

A qualified MHF-LS shipper shall complete the following diagram by writing the package number and corresponding weight at the approximate position in which it is placed. The space to the left of the diagram may be used for additional or explanatory information as necessary.

Shipment Number- LS040-01-985

Front

9223

21,250-lbs

9157

17050-lbs

Rear

MHF-LS Qualified Technician
Signature [signature]
Shipment Date 5-19-05

Attachment 5.9
LOADING DIAGRAM

A qualified MHF-LS shipper shall complete the following diagram by writing the package number and corresponding weight at the approximate position in which it is placed. The space to the left of the diagram may be used for additional or explanatory information as necessary.

Shipment Number- 0540-01-985

Front

9203

19,740-lbs

9138

16,400-lbs

Rear

MHF-LS Qualified Technician
Signature [signature]
Shipment Date 5.17.05

Attachment 5.9
LOADING DIAGRAM

A qualified MHF-LS shipper shall complete the following diagram by writing the package number and corresponding weight at the approximate position in which it is placed. The space to the left of the diagram may be used for additional or explanatory information as necessary.

Shipment Number- 0840-01-9855

Front

9156

17,240-lbs

9199

20,110-lbs

Rear

MHF-LS Qualified Technician
Signature [signature]
Shipment Date 5.19.05

Attachment 5.9
LOADING DIAGRAM

A qualified MHF-LS shipper shall complete the following diagram by writing the package number and corresponding weight at the approximate position in which it is placed. The space to the left of the diagram may be used for additional or explanatory information as necessary.

Shipment Number- 0840-01-985

Front

9198

12,460-lbs

9207

18,790-lbs

Rear

MHF-LS Qualified Technician
Signature [signature]
Shipment Date 5-19-05

Attachment 5.9
LOADING DIAGRAM

A qualified MHF-LS shipper shall complete the following diagram by writing the package number and corresponding weight at the approximate position in which it is placed. The space to the left of the diagram may be used for additional or explanatory information as necessary.

Shipment Number- 0840-01-985

Front

9146

22,900 -lbs

9222

20,780 -lbs

Rear

MHF-LS Qualified Technician
Signature [signature]
Shipment Date 5.19.05

Attachment 5.15
RAILCAR INSPECTION FORM

Shipment Number	Carrier	Railcar Number
0840.01.985	NYARR/MHF	NHRX-1451

Item	SAT	UNSAT	Criteria	Comments
Coupler	☒	☐	Hardware intact, no cracks or broken welds, latching mechanism works properly, no loose or damaged parts	
Suspension	☒	☐	Hardware intact, no visible cracks or broken welds, coil springs seated and intact, inner and outer bearings intact and seated properly	
Wheel & Axle Assembly	☒	☐	Overall condition, no cracks or damaged areas on wheel surfaces, hubs centered, bolting intact, rims not bent or cracked	
Frame & Undercarriage	☒	☐	Main beams straight and centered, no major bends or damage, welds intact, no cracks	
Floors & Walls (Gondola, Boxcar)	☒	☐	No damage with open holes, punch throughs, ect. No rust damage, seams and welds intact, no rotting or other material problems, structurally sound	
Attachment Points or Tie Downs	☒	☐	Tie down hardware straight and intact, no cracks on or around attachment hardware, mechanical clips or latches operable and complete	
Doors (Boxcar Only)	☒	☐	Can be closed and secured properly, lubricated properly, rollers and tracks in operable condition, no loose or missing hardware, sealing surfaces intact and seals in serviceable condition	
Seals and Gasket	☒	☐	Seal Flanges intact with no dents or bends that affect sealing capability, gaskets pliable and in serviceable condition, no torn or missing areas, gasket appropriate to meet sealing requirements	
Seams (Gondola, Boxcar)	☒	☐	Seams intact, welds visibly sufficient, all corners and mating interfaces caulked and sealed properly	
Drains	☒	☐	Drains plugged or sealed properly, verify threaded plugs are tack welded or otherwise disabled, all other holes closed and sealed	
Brakes	☒	☐	Visibly inspect brake shoes, minimum 1" contact surface on all shoes, hoses and piping (tubing) mechanically sound, no missing or loose hardware, valves operate freely, no kinks or obstructions in piping or hoses	
Paint and Lettering	☒	☐	Overall good condition of exterior surfaces, identification numbering legible and intact, areas for placards or labels intact and structurally sound (Wood or metal panels)	
Bracing	☒	☐	Bracing and shoring must be sufficient to prevent shifting of lading during conditions normally incident to transportation	

MHF-LS Qualified Technician Signature _____

Shipment Date 5.19.25

Straight Bill of Lading

Shipper MHF-LS For GTE Operations Support Incorporated
140 Contiague Rock Road
Hicksville, NY 11369

Date: 5/19/2005

Consigned to MHF-LS @ New York-Atlantic Rail Spur
Hicksville, NY 11369

Load in Gondola # MHFX 1451

Emergency Contact: CHEMTREC 800-424-9300

TR: TL:

Quantity	Description		Net Waste Weight
2	Soil, DOT Non-Regulated Waste, Containing		
	Radioactive Materials.		
	Package ID Number		**Pounds:**
	Liner	9146	22900
	Liner	9222	20780
			Total:
			43680
	Packages do not meet the DOT "radioactive material"		
	definition in 49 CFR 173.403.		
	Radionuclide: Ac-227,Th-227, Th232, Th230,Pa-231,Ra-223		
	Ra-226,Ra-228,Th-228,U-234,U-nat,		
	Total Activity: 5.3445 MBq		
	Physical Form: Solid		
	Chemical Form: Metal Oxide		

GENERATOR CERTIFICATION: I hereby certify and declare that the contents of this consignment are fully and accurately described above by proper shipping name and are classified, packed, marked, and labeled, and are in all respects in proper condition for transport by highway according to applicable international and national government regulations.

Printed/Typed Name	Signature		Date
Robert Miller for MHFLS at GTEOSI			5/19/2005
Transporter	Signature		Date
Priority Transport			5/19/2005

Straight Bill of Lading

Shipper MHF-LS For GTE Operations Support Incorporated
140 Contiague Rock Road
Hicksville, NY 11369

Date: 5/19/2005

Consigned to MHF-LS @ New York-Atlantic Rail Spur
Hicksville, NY 11369

Load in Gondola # MHFX 1451

Emergency Contact: CHEMTREC 800-424-9300

TR: TL:

Quantity	Description		Net Waste Weight
2	Soil, DOT Non-Regulated Waste, Containing		
	Radioactive Materials.		
	Package ID Number		**Pounds:**
	Liner	9198	12460
	Liner	9207	18790
			Total:
			31250
	Packages do not meet the DOT "radioactive material"		
	definition in 49 CFR 173.403.		
	Radionuclide: Ac-227,Th-227, Th232, Th230,Pa-231,Ra-223		
	Ra-226,Ra-228,Th-228,U-234,U-nat,		
	Total Activity: 2.17787 MBq		
	Physical Form: Solid		
	Chemical Form: Metal Oxide		

2.17787

GENERATOR CERTIFICATION: I hereby certify and declare that the contents of this consignment are fully and accurately described above by proper shipping name and are classified, packed, marked, and labeled, and are in all respects in proper condition for transport by highway according to applicable international and national government regulations.

Printed/Typed Name	Signature		Date
Robert Miller for MHFLS at GTEOSI			5/19/2005
Transporter	Signature		Date
Priority Transport			5/19/2005

Straight Bill of Lading

Shipper MHF-LS For GTE Operations Support Incorporated
140 Contiague Rock Road
Hicksville, NY 11369

Date: 5/19/2005

Consigned to MHF-LS @ New York-Atlantic Rail Spur
Hicksville, NY 11369

Load in Gondola # MHFX 1451

Emergency Contact: CHEMTREC 800-424-9300

TR:

Quantity	Description		Net Waste Weight
2	Soil, DOT Non-Regulated Waste, Containing		
	Radioactive Materials.		
	Package ID Number		**Pounds:**
	Liner	9156	17240
	Liner	9199	20110
			Total:
			37350
	Packages do not meet the DOT "radioactive material"		
	definition in 49 CFR 173.403.		
	Radionuclide: Ac-227,Th-227, Th232, Th230,Pa-231,Ra-223		
	Ra-226,Ra-228,Th-228,U-234,U-nat,		
	Total Activity: 4.612 MBq		
	Physical Form: Solid		
	Chemical Form: Metal Oxide		

4.612

GENERATOR CERTIFICATION: I hereby certify and declare that the contents of this consignment are fully and accurately described above by proper shipping name and are classified, packed, marked, and labeled, and are in all respects in proper condition for transport by highway according to applicable international and national government regulations.

Printed/Typed Name	Signature		Date
Robert Miller for MHFLS at GTEOSI			5/19/2005
Transporter	Signature		Date
Priority Transport			5/19/2005

Straight Bill of Lading

Shipper	MHF-LS For GTE Operations Support Incorporated 140 Contiague Rock Road Hicksville, NY 11369	Date: 5/19/2005
Consigned to	MHF-LS @ New York-Atlantic Rail Spur Hicksville, NY 11369	Load in Gondola # MHFX
Emergency Contact:	CHEMTREC 800-424-9300	1451

TR: TL:

Quantity	Description		Net Waste Weight
2	Soil, DOT Non-Regulated Waste, Containing		
	Radioactive Materials.		
	Package ID Number		**Pounds:**
	Liner	9203	19740
	Liner	9138	16400
			Total:
			36140
	Packages do not meet the DOT "radioactive material"		
	definition in 49 CFR 173.403.		
	Radionuclide: Ac-227,Th-227, Th232, Th230,Pa-231,Ra-223		
	Ra-226,Ra-228,Th-228,U-234,U-nat,		
	Total Activity: 5.71538 MBq		
	Physical Form: Solid		
	Chemical Form: Metal Oxide		

5.71538

GENERATOR CERTIFICATION I hereby certify and declare that the contents of this consignment are fully and accurately described above by proper shipping name and are classified, packed, marked, and labeled, and are in all respects in proper condition for transport by highway according to applicable international and national government regulations

Printed/Typed Name	Signature		Date
Robert Miller for MHFLS at GTEOSI			5/19/2005
Transporter	Signature		Date
Priority Transport			5/19/2005

Straight Bill of Lading

Shipper MHF-LS For GTE Operations Support Incorporated
140 Contiague Rock Road
Hicksville, NY 11369

Date: 5/19/2005

Consigned to MHF-LS @ New York-Atlantic Rail Spur
Hicksville, NY 11369

Load in Gondola # NHRX 1451

Emergency Contact: CHEMTREC 800-424-9300

TR: TL:

Total All Trucks 186720

Quantity	Description		Net Waste Weight
2	Soil, DOT Non-Regulated Waste, Containing		
	Radioactive Materials.		
	Package ID Number		**Pounds:**
	Liner	9223	21250
	Liner	9157	17050
			Total:
			38300
	Packages do not meet the DOT "radioactive material"		
	definition in 49 CFR 173.403.		
	Radionuclide: Ac-227,Th-227, Th232, Th230,Pa-231,Ra-223		
	Ra-226,Ra-228,Th-228,U-234,U-nat,		
	Total Activity: 60.3068 MBq		
	Physical Form: Solid		
	Chemical Form: Metal Oxide		

60.3068

GENERATOR CERTIFICATION I hereby certify and declare that the contents of this consignment are fully and accurately described above by proper shipping name and are classified, packed, marked, and labeled, and are in all respects in proper condition for transport by highway according to applicable international and national government regulations

Printed/Typed Name	Signature		Date
Robert Miller for MHFLS at GTEOSI			5/19/2005
Transporter	**Signature**		**Date**
Priority Transport			5/19/2005

NHRX	Shipment #	0													
	new	Bag #	9223	9157	9203	9138	9156	9199	9198	9207	9146	9222			
	Storage Loc.		21250	17050	19740	16400	17240	20110	12460	18790	22900	20780			
1451	0840-01-985	200000													

container #
9199

shipping check sheet (For Form 540)

	Ac-227		corrected	activity mBq	activity mCi	activity Ci	SNM	source	
		4.767E-002	4.767E-002	1.6039E-02	4.3349E-04	4.3349E-07	grams	kg	
grams			pCi/g				6.0207E-09	6.0207E-12	
9093620		7.2000E+01							
	Pa-231			activity mBq	activity mCi	activity Ci	SNM	source	
20030		1.776E-001	1.776E-001	5.9756E-02	1.6150E-03	1.6150E-06	grams	kg	
grams							3.4362E-05	3.4362E-08	
9093620		4.7000E-02							
	Ra-223			activity mBq	activity mCi	activity Ci	SNM	source	
20030		3.933E-002	3.933E-002	1.3233E-02	3.5765E-04	3.5765E-07	grams	kg	
grams							7.0128E-12	7.0128E-15	
9093620		5.1000E+04							
	Ra-226			activity mBq	activity mCi	activity Ci	SNM	source	
20030		2.480E-001	1.8005E-01	6.0580E-02	1.6373E-03	1.6373E-06	grams	kg	1.37741
grams							1.6373E-06	1.6373E-09	
9093620		1.0000E+00							
	Ra228			activity mBq	activity mCi	activity Ci	SNM	source	
20030		3.517E-001	4.9887E-01	1.6785E-01	4.5365E-03	4.5365E-06	grams	kg	0.705
grams							1.6802E-08	1.6802E-11	
9093620		2.7000E+02							
	TH-227			activity mBq	activity mCi	activity Ci	SNM	source	
20030		4.767E-002	4.767E-002	1.6039E-02	4.3349E-04	4.3349E-07	grams	kg	
grams							1.3984E-11	1.3984E-14	
9093620		3.1000E+04							
	Th-228			activity mBq	activity mCi	activity Ci	SNM	source	
20030		3.392E-001	6.1260E-01	2.0612E-01	5.5707E-03	5.5707E-06	grams	kg	
grams							6.7935E-09	6.7935E-12	0.55371
9093620		8.2000E+02							
	Th-230			activity mBq	activity mCi	activity Ci	SNM	source	
20030		3.517E-001	2.6096E-01	8.7804E-02	2.3731E-03	2.3731E-06	grams	kg	
grams							1.1300E-04	1.1300E-07	1.34771
9093620		2.1000E-02							
	TH-232			activity mBq	activity mCi	activity Ci	SNM	source	
20030		3.517E-001	4.9887E-01	1.6785E-01	4.5365E-03	4.5365E-06	grams	kg	0.705
grams							4.1241E+01	4.1241E-02	
9093620		1.1000E-07							
	U-234			activity mBq	activity mCi	activity Ci	SNM	source	
20030		1.336E+000	1.1864E+00	3.9917E-01	1.0788E-02	1.0788E-05	grams	kg	1.12613
grams							1.7401E-03	1.7401E-06	
9093620		6.2000E-03							
	U-235			activity mBq	activity mCi	activity Ci	SNM	source	
20030		2.511E-001	3.2151E-01	1.0818E-01	2.9237E-03	2.9237E-06	grams	kg	0.781
grams							1.3290E+00	1.3290E-03	
9093620		2.2000E-06							
	U-238			activity mBq	activity mCi	activity Ci	SNM	source	
20030		1.336E+000	1.8030E+00	6.0663E-01	1.6396E-02	1.6396E-05	grams	kg	0.741
grams							4.8222E+01	4.8222E-02	
9093620		3.4000E-07							

Totals for all flag 1 data

			corrected	activity mBq	activity mCi	activity Ci	SNM	source	
20030		4.8777E+00	5.6268E+00	1.9092E+00	5.1601E-02	5.1601E-05	grams	kg	flag1 data
			pCi/g	541 will be < than the 540 (MDA not added)			1.3290E+00	8.9465E-02	
158.968254				data for NORM					
	U-nat		corrected pCi/g	activity mBq	activity mCi	activity Ci		source	
		1.5871E+00	2.1245E+00	7.1481E-01	1.9319E-02	1.9319E-05		kg	
								2.7210E-02	
		7.1000E-07							

U-nat		corrected pCi/g	activity mBq	activity mCi	activity Ci		source	
	4.8777E+00	5.6268E+00	1.9092E+00	5.1601E-02	5.1601E-05		kg total	norm data
							6.8453E-02	

container #
9198

shipping check sheet (For Form 540)

	Ac-227		corrected	activity mBq	activity mCi	activity Ci	SNM	source	
		6.764E-002	6.764E-002	1.4066E-02	3.8017E-04	3.8017E-07	grams	kg	
grams			pCi/g				5.2802E-09	5.2802E-12	
5620520		7.2000E+01							
	Pa-231			activity mBq	activity mCi	activity Ci	SNM	source	
12380		1.605E-001	1.605E-001	3.3377E-02	9.0209E-04	9.0209E-07	grams	kg	
grams							1.9193E-05	1.9193E-08	
5620520		4.7000E-02							
	Ra-223			activity mBq	activity mCi	activity Ci	SNM	source	
12380		9.349E-002	9.349E-002	1.9442E-02	5.2546E-04	5.2546E-07	grams	kg	
grams							1.0303E-11	1.0303E-14	
5620520		5.1000E+04							
	Ra-226			activity mBq	activity mCi	activity Ci	SNM	source	
12380		2.234E-001	1.6219E-01	3.3729E-02	9.1158E-04	9.1158E-07	grams	kg	1.37741
grams							9.1158E-07	9.1158E-10	
5620520		1.0000E+00							
	Ra228			activity mBq	activity mCi	activity Ci	SNM	source	
12380		2.952E-001	4.1872E-01	8.7077E-02	2.3534E-03	2.3534E-06	grams	kg	0.705
grams							8.7165E-09	8.7165E-12	
5620520		2.7000E+02							
	TH-227			activity mBq	activity mCi	activity Ci	SNM	source	
12380		6.764E-002	6.764E-002	1.4066E-02	3.8017E-04	3.8017E-07	grams	kg	
grams							1.2264E-11	1.2264E-14	
5620520		3.1000E+04							
	Th-228			activity mBq	activity mCi	activity Ci	SNM	source	
12380		2.982E-001	5.3855E-01	1.1200E-01	3.0269E-03	3.0269E-06	grams	kg	
grams							3.6914E-09	3.6914E-12	0.55371
5620520		8.2000E+02							
	Th-230			activity mBq	activity mCi	activity Ci	SNM	source	
12380		2.952E-001	2.1904E-01	4.5551E-02	1.2311E-03	1.2311E-06	grams	kg	
grams							5.8624E-05	5.8624E-08	1.34771
5620520		2.1000E-02							
	TH-232			activity mBq	activity mCi	activity Ci	SNM	source	
12380		2.952E-001	4.1872E-01	8.7077E-02	2.3534E-03	2.3534E-06	grams	kg	0.705
grams							2.1395E+01	2.1395E-02	
5620520		1.1000E-07							
	U-234			activity mBq	activity mCi	activity Ci	SNM	source	
12380		2.609E-001	2.3168E-01	4.8180E-02	1.3022E-03	1.3022E-06	grams	kg	1.12613
grams							2.1002E-04	2.1002E-07	
5620520		6.2000E-03							
	U-235			activity mBq	activity mCi	activity Ci	SNM	source	
12380		3.376E-002	4.3227E-02	8.9894E-03	2.4296E-04	2.4296E-07	grams	kg	0.781
grams							1.1043E-01	1.1043E-04	
5620520		2.2000E-06							
	U-238			activity mBq	activity mCi	activity Ci	SNM	source	
12380		2.609E-001	3.5209E-01	7.3221E-02	1.9789E-03	1.9789E-06	grams	kg	0.741
grams							5.8204E+00	5.8204E-03	
5620520		3.4000E-07							

Totals for all flag 1 data

			corrected	activity mBq	activity mCi	activity Ci	SNM	source	
12380		2.3520E+00	2.7058E+00	5.7677E-01	1.5588E-02	1.5588E-05	grams	kg	flag1 data
			pCi/g	541 will be < than the 540 (MDA not added)			1.1043E-01	2.7216E-02	
98.25396825				data for NORM					
	U-nat		corrected pCi/g	activity mBq	activity mCi	activity Ci		source	
		2.9466E-01	3.9532E-01	8.2210E-02	2.2219E-03	2.2219E-06		kg	
								3.1294E-03	
		7.1000E-07							

U-nat		corrected pCi/g	activity mBq	activity mCi	activity Ci		source	
	2.3520E+00	2.7058E+00	5.7677E-01	1.5588E-02	1.5588E-05		kg total	norm data
							2.4525E-02	

container #
9222

shipping check sheet (For Form 540)

	Ac-227		corrected	activity mBq	activity mCi	activity Ci	SNM	source	
		4.473E-002	4.473E-002	1.5553E-02	4.2036E-04	4.2036E-07	grams	kg	
grams			pCi/g				5.8384E-09	5.8384E-12	
9397800		7.2000E+01							
	Pa-231			activity mBq	activity mCi	activity Ci	SNM	source	
20700		3.261E-001	3.261E-001	1.1339E-01	3.0646E-03	3.0646E-06	grams	kg	
grams							6.5205E-05	6.5205E-08	
9397800		4.7000E-02							
	Ra-223			activity mBq	activity mCi	activity Ci	SNM	source	
20700		3.897E-002	3.897E-002	1.3551E-02	3.6623E-04	3.6623E-07	grams	kg	
grams							7.1810E-12	7.1810E-15	
9397800		5.1000E+04							
	Ra-226			activity mBq	activity mCi	activity Ci	SNM	source	
20700		2.934E-001	2.1301E-01	7.4067E-02	2.0018E-03	2.0018E-06	grams	kg	1.37741
grams							2.0018E-06	2.0018E-09	
9397800		1.0000E+00							
	Ra228			activity mBq	activity mCi	activity Ci	SNM	source	
20700		3.285E-001	4.6596E-01	1.6202E-01	4.3790E-03	4.3790E-06	grams	kg	0.705
grams							1.6218E-08	1.6218E-11	
9397800		2.7000E+02							
	TH-227			activity mBq	activity mCi	activity Ci	SNM	source	
20700		4.473E-002	4.473E-002	1.5553E-02	4.2036E-04	4.2036E-07	grams	kg	
grams							1.3560E-11	1.3560E-14	
9397800		3.1000E+04							
	Th-228			activity mBq	activity mCi	activity Ci	SNM	source	
20700		3.214E-001	5.8045E-01	2.0183E-01	5.4549E-03	5.4549E-06	grams	kg	
grams							6.6524E-09	6.6524E-12	0.55371
9397800		8.2000E+02							
	Th-230			activity mBq	activity mCi	activity Ci	SNM	source	
20700		3.285E-001	2.4375E-01	8.4755E-02	2.2907E-03	2.2907E-06	grams	kg	
grams							1.0908E-04	1.0908E-07	1.34771
9397800		2.1000E-02							
	TH-232			activity mBq	activity mCi	activity Ci	SNM	source	
20700		3.285E-001	4.6596E-01	1.6202E-01	4.3790E-03	4.3790E-06	grams	kg	0.705
grams							3.9809E+01	3.9809E-02	
9397800		1.1000E-07							
	U-234			activity mBq	activity mCi	activity Ci	SNM	source	
20700		2.086E+000	1.8524E+00	6.4410E-01	1.7408E-02	1.7408E-05	grams	kg	1.12613
grams							2.8078E-03	2.8078E-06	
9397800		6.2000E-03							
	U-235			activity mBq	activity mCi	activity Ci	SNM	source	
20700		2.816E-001	3.6056E-01	1.2537E-01	3.3885E-03	3.3885E-06	grams	kg	0.781
grams							1.5402E+00	1.5402E-03	
9397800		2.2000E-06							
	U-238			activity mBq	activity mCi	activity Ci	SNM	source	
20700		2.086E+000	2.8151E+00	9.7887E-01	2.6456E-02	2.6456E-05	grams	kg	0.741
grams							7.7811E+01	7.7811E-02	
9397800		3.4000E-07							

Totals for all flag 1 data

			corrected	activity mBq	activity mCi	activity Ci	SNM	source	
20700		6.5084E+00	7.4070E+00	2.5911E+00	7.0029E-02	7.0029E-05	grams	kg	flag1 data
			pCi/g	541 will be < than the 540 (MDA not added)			1.5402E+00	1.1762E-01	
164.2857143				data for NORM					
	U-nat		corrected pCi/g	activity mBq	activity mCi	activity Ci		source	
		2.3676E+00	3.1757E+00	1.1042E+00	2.9844E-02	2.9844E-05		kg	
								4.2034E-02	
		7.1000E-07							

	U-nat		corrected pCi/g	activity mBq	activity mCi	activity Ci		source	
		6.5084E+00	7.4070E+00	2.5911E+00	7.0029E-02	7.0029E-05		kg total	norm data
								8.1846E-02	

container #
9223

shipping check sheet (For Form 540)

	Ac-227		corrected	activity mBq	activity mCi	activity Ci	SNM	source	
		3.333E-002	3.333E-002	1.1853E-02	3.2034E-04	3.2034E-07	grams	kg	
grams			pCi/g				4.4492E-09	4.4492E-12	
9611180		7.2000E+01							
	Pa-231			activity mBq	activity mCi	activity Ci	SNM	source	
21170		3.474E-001	3.474E-001	1.2354E-01	3.3389E-03	3.3389E-06	grams	kg	
grams							7.1041E-05	7.1041E-08	
9611180		4.7000E-02							
	Ra-223			activity mBq	activity mCi	activity Ci	SNM	source	
21170		1.437E-001	1.437E-001	5.1102E-02	1.3811E-03	1.3811E-06	grams	kg	
grams							2.7081E-11	2.7081E-14	
9611180		5.1000E+04							
	Ra-226			activity mBq	activity mCi	activity Ci	SNM	source	
21170		1.348E-001	9.7865E-02	3.4802E-02	9.4060E-04	9.4060E-07	grams	kg	1.37741
grams							9.4060E-07	9.4060E-10	
9611180		1.0000E+00							
	Ra228			activity mBq	activity mCi	activity Ci	SNM	source	
21170		2.622E-001	3.7191E-01	1.3226E-01	3.5745E-03	3.5745E-06	grams	kg	0.705
grams							1.3239E-08	1.3239E-11	
9611180		2.7000E+02							
	TH-227			activity mBq	activity mCi	activity Ci	SNM	source	
21170		3.333E-002	3.333E-002	1.1853E-02	3.2034E-04	3.2034E-07	grams	kg	
grams							1.0334E-11	1.0334E-14	
9611180		3.1000E+04							
	Th-228			activity mBq	activity mCi	activity Ci	SNM	source	
21170		1.769E-001	3.1948E-01	1.1361E-01	3.0706E-03	3.0706E-06	grams	kg	
grams							3.7446E-09	3.7446E-12	0.55371
9611180		8.2000E+02							
	Th-230			activity mBq	activity mCi	activity Ci	SNM	source	
21170		2.622E-001	1.9455E-01	6.9185E-02	1.8699E-03	1.8699E-06	grams	kg	
grams							8.9042E-05	8.9042E-08	1.34771
9611180		2.1000E-02							
	TH-232			activity mBq	activity mCi	activity Ci	SNM	source	
21170		2.622E-001	3.7191E-01	1.3226E-01	3.5745E-03	3.5745E-06	grams	kg	0.705
grams							3.2496E+01	3.2496E-02	
9611180		1.1000E-07							
	U-234			activity mBq	activity mCi	activity Ci	SNM	source	
21170		4.099E-001	3.6399E-01	1.2944E-01	3.4984E-03	3.4984E-06	grams	kg	1.12613
grams							5.6425E-04	5.6425E-07	
9611180		6.2000E-03							
	U-235			activity mBq	activity mCi	activity Ci	SNM	source	
21170		1.322E-001	1.6927E-01	6.0195E-02	1.6269E-03	1.6269E-06	grams	kg	0.781
grams							7.3949E-01	7.3949E-04	
9611180		2.2000E-06							
	U-238			activity mBq	activity mCi	activity Ci	SNM	source	
21170		4.099E-001	5.5317E-01	1.9672E-01	5.3166E-03	5.3166E-06	grams	kg	0.741
grams							1.5637E+01	1.5637E-02	
9611180		3.4000E-07							

Totals for all flag 1 data

			corrected	activity mBq	activity mCi	activity Ci	SNM	source	
21170		2.6081E+00	2.9666E+00	1.0668E+00	2.8833E-02	2.8833E-05	grams	kg	flag1 data
			pCi/g	541 will be < than the 540 (MDA not added)			7.3949E-01	4.8134E-02	
168.015873				data for NORM					
	U-nat		corrected pCi/g	activity mBq	activity mCi	activity Ci		source	
		5.4210E-01	7.2244E-01	2.5691E-01	6.9435E-03	6.9435E-06		kg	
								9.7796E-03	
		7.1000E-07							

U-nat		corrected pCi/g	activity mBq	activity mCi	activity Ci		source	
	2.6081E+00	2.9666E+00	1.0668E+00	2.8833E-02	2.8833E-05		kg total	norm data
							4.2276E-02	

container #
9207

shipping check sheet (For Form 540)

	Ac-227		corrected	activity mBq	activity mCi	activity Ci	SNM	source	
		2.668E-002	2.668E-002	8.3853E-03	2.2663E-04	2.2663E-07	grams	kg	
grams			pCi/g				3.1476E-09	3.1476E-12	
8494340		7.2000E+01							
	Pa-231			activity mBq	activity mCi	activity Ci	SNM	source	
18710		1.224E-001	1.224E-001	3.8469E-02	1.0397E-03	1.0397E-06	grams	kg	
grams							2.2121E-05	2.2121E-08	
8494340		4.7000E-02							
	Ra-223			activity mBq	activity mCi	activity Ci	SNM	source	
18710		8.060E-002	8.060E-002	2.5332E-02	6.8464E-04	6.8464E-07	grams	kg	
grams							1.3424E-11	1.3424E-14	
8494340		5.1000E+04							
	Ra-226			activity mBq	activity mCi	activity Ci	SNM	source	
18710		1.524E-001	1.1064E-01	3.4774E-02	9.3983E-04	9.3983E-07	grams	kg	1.37741
grams							9.3983E-07	9.3983E-10	
8494340		1.0000E+00							
	Ra228			activity mBq	activity mCi	activity Ci	SNM	source	
18710		1.589E-001	2.2539E-01	7.0838E-02	1.9145E-03	1.9145E-06	grams	kg	0.705
grams							7.0909E-09	7.0909E-12	
8494340		2.7000E+02							
	TH-227			activity mBq	activity mCi	activity Ci	SNM	source	
18710		2.668E-002	2.668E-002	8.3853E-03	2.2663E-04	2.2663E-07	grams	kg	
grams							7.3106E-12	7.3106E-15	
8494340		3.1000E+04							
	Th-228			activity mBq	activity mCi	activity Ci	SNM	source	
18710		1.303E-001	2.3532E-01	7.3959E-02	1.9989E-03	1.9989E-06	grams	kg	
grams							2.4377E-09	2.4377E-12	0.55371
8494340		8.2000E+02							
	Th-230			activity mBq	activity mCi	activity Ci	SNM	source	
18710		1.589E-001	1.1790E-01	3.7056E-02	1.0015E-03	1.0015E-06	grams	kg	
grams							4.7691E-05	4.7691E-08	1.34771
8494340		2.1000E-02							
	TH-232			activity mBq	activity mCi	activity Ci	SNM	source	
18710		1.589E-001	2.2539E-01	7.0838E-02	1.9145E-03	1.9145E-06	grams	kg	0.705
grams							1.7405E+01	1.7405E-02	
8494340		1.1000E-07							
	U-234			activity mBq	activity mCi	activity Ci	SNM	source	
18710		1.625E+000	1.4430E+00	4.5352E-01	1.2257E-02	1.2257E-05	grams	kg	1.12613
grams							1.9770E-03	1.9770E-06	
8494340		6.2000E-03							
	U-235			activity mBq	activity mCi	activity Ci	SNM	source	
18710		2.245E-001	2.8745E-01	9.0343E-02	2.4417E-03	2.4417E-06	grams	kg	0.781
grams							1.1099E+00	1.1099E-03	
8494340		2.2000E-06							
	U-238			activity mBq	activity mCi	activity Ci	SNM	source	
18710		1.625E+000	2.1930E+00	6.8923E-01	1.8628E-02	1.8628E-05	grams	kg	0.741
grams							5.4788E+01	5.4788E-02	
8494340		3.4000E-07							

Totals for all flag 1 data

			corrected	activity mBq	activity mCi	activity Ci	SNM	source	
18710		4.4903E+00	5.0678E+00	1.6011E+00	4.3274E-02	4.3274E-05	grams	kg	flag1 data
			pCi/g	541 will be < than the 540 (MDA not added)			1.1099E+00	7.2195E-02	
148.4920635			data for NORM						
	U-nat		corrected pCi/g	activity mBq	activity mCi	activity Ci		source	
		1.8495E+00	2.4804E+00	7.7958E-01	2.1070E-02	2.1070E-05		kg	
								2.9676E-02	
		7.1000E-07							

	U-nat		corrected pCi/g	activity mBq	activity mCi	activity Ci		source	
		4.4903E+00	5.0678E+00	1.6011E+00	4.3274E-02	4.3274E-05		kg total	norm data
								4.7083E-02	

container #
9146

shipping check sheet (For Form 540)

	Ac-227		corrected	activity mBq	activity mCi	activity Ci	SNM	source	
		7.706E-002	7.706E-002	2.9539E-02	7.9836E-04	7.9836E-07	grams	kg	
grams			pCi/g				1.1088E-08	1.1088E-11	
10360280		7.2000E+01							
	Pa-231			activity mBq	activity mCi	activity Ci	SNM	source	
22820		4.843E-001	4.843E-001	1.8565E-01	5.0175E-03	5.0175E-06	grams	kg	
grams							1.0675E-04	1.0675E-07	
10360280		4.7000E-02							
	Ra-223			activity mBq	activity mCi	activity Ci	SNM	source	
22820		5.017E-002	5.017E-002	1.9232E-02	5.1978E-04	5.1978E-07	grams	kg	
grams							1.0192E-11	1.0192E-14	
10360280		5.1000E+04							
	Ra-228			activity mBq	activity mCi	activity Ci	SNM	source	
22820		3.077E-001	2.2339E-01	8.5632E-02	2.3144E-03	2.3144E-06	grams	kg	1.37741
grams							2.3144E-06	2.3144E-09	
10360280		1.0000E+00							
	Ra228			activity mBq	activity mCi	activity Ci	SNM	source	
22820		3.916E-001	5.5546E-01	2.1293E-01	5.7547E-03	5.7547E-06	grams	kg	0.705
grams							2.1314E-08	2.1314E-11	
10360280		2.7000E+02							
	TH-227			activity mBq	activity mCi	activity Ci	SNM	source	
22820		7.706E-002	7.706E-002	2.9539E-02	7.9836E-04	7.9836E-07	grams	kg	
grams							2.5754E-11	2.5754E-14	
10360280		3.1000E+04							
	Th-228			activity mBq	activity mCi	activity Ci	SNM	source	
22820		3.754E-001	6.7797E-01	2.5989E-01	7.0240E-03	7.0240E-06	grams	kg	
grams							8.5658E-09	8.5658E-12	0.55371
10360280		8.2000E+02							
	Th-230			activity mBq	activity mCi	activity Ci	SNM	source	
22820		3.916E-001	2.9057E-01	1.1138E-01	3.0104E-03	3.0104E-06	grams	kg	
grams							1.4335E-04	1.4335E-07	1.34771
10360280		2.1000E-02							
	TH-232			activity mBq	activity mCi	activity Ci	SNM	source	
22820		3.916E-001	5.5546E-01	2.1293E-01	5.7547E-03	5.7547E-06	grams	kg	0.705
grams							5.2316E+01	5.2316E-02	
10360280		1.1000E-07							
	U-234			activity mBq	activity mCi	activity Ci	SNM	source	
22820		1.748E+000	1.5522E+00	5.9501E-01	1.6081E-02	1.6081E-05	grams	kg	1.12613
grams							2.5938E-03	2.5938E-06	
10360280		6.2000E-03							
	U-235			activity mBq	activity mCi	activity Ci	SNM	source	
22820		2.189E-001	2.8028E-01	1.0744E-01	2.9038E-03	2.9038E-06	grams	kg	0.781
grams							1.3199E+00	1.3199E-03	
10360280		2.2000E-06							
	U-238			activity mBq	activity mCi	activity Ci	SNM	source	
22820		1.748E+000	2.3590E+00	9.0427E-01	2.4440E-02	2.4440E-05	grams	kg	0.741
grams							7.1881E+01	7.1881E-02	
10360280		3.4000E-07							

Totals for all flag 1 data

			corrected	activity mBq	activity mCi	activity Ci	SNM	source	
22820		6.2614E+00	7.1059E+00	2.7534E+00	7.4417E-02	7.4417E-05	grams	kg	flag1 data
			pCi/g	541 will be < than the 540 (MDA not added)			1.3199E+00	1.2420E-01	
181.1111111			data for NORM						
	U-nat		corrected pCi/g	activity mBq	activity mCi	activity Ci		source	
		1.9669E+00	2.6393E+00	1.0117E+00	2.7343E-02	2.7343E-05		kg	
								3.8512E-02	
		7.1000E-07							

U-nat		corrected pCi/g	activity mBq	activity mCi	activity Ci		source	
	6.2614E+00	7.1059E+00	2.7534E+00	7.4417E-02	7.4417E-05		kg total	norm data
							9.0830E-02	

x

container #
9138

shipping check sheet (For Form 540)

	Ac-227		corrected	activity mBq	activity mCi	activity Ci	SNM	source	
		4.919E-002	4.919E-002	1.3485E-02	3.6446E-04	3.6446E-07	grams	kg	
grams			pCi/g				5.0620E-09	5.0620E-12	
7409280		7.2000E+01							
	Pa-231			activity mBq	activity mCi	activity Ci	SNM	source	
16320		1.958E-001	1.958E-001	5.3677E-02	1.4507E-03	1.4507E-06	grams	kg	
grams							3.0867E-05	3.0867E-08	
7409280		4.7000E-02							
	Ra-223			activity mBq	activity mCi	activity Ci	SNM	source	
16320		5.305E-002	5.305E-002	1.4543E-02	3.9306E-04	3.9306E-07	grams	kg	
grams							7.7071E-12	7.7071E-15	
7409280		5.1000E+04							
	Ra-226			activity mBq	activity mCi	activity Ci	SNM	source	
16320		1.842E-001	1.3373E-01	3.6661E-02	9.9084E-04	9.9084E-07	grams	kg	1.37741
grams							9.9084E-07	9.9084E-10	
7409280		1.0000E+00							
	Ra228			activity mBq	activity mCi	activity Ci	SNM	source	
16320		2.895E-001	4.1064E-01	1.1257E-01	3.0425E-03	3.0425E-06	grams	kg	0.705
grams							1.1269E-08	1.1269E-11	
7409280		2.7000E+02							
	TH-227			activity mBq	activity mCi	activity Ci	SNM	source	
16320		4.919E-002	4.919E-002	1.3485E-02	3.6446E-04	3.6446E-07	grams	kg	
grams							1.1757E-11	1.1757E-14	
7409280		3.1000E+04							
	Th-228			activity mBq	activity mCi	activity Ci	SNM	source	
16320		2.113E-001	3.8161E-01	1.0462E-01	2.8274E-03	2.8274E-06	grams	kg	
grams							3.4481E-09	3.4481E-12	0.55371
7409280		8.2000E+02							
	Th-230			activity mBq	activity mCi	activity Ci	SNM	source	
16320		2.895E-001	2.1481E-01	5.8888E-02	1.5916E-03	1.5916E-06	grams	kg	
grams							7.5789E-05	7.5789E-08	1.34771
7409280		2.1000E-02							
	TH-232			activity mBq	activity mCi	activity Ci	SNM	source	
16320		2.895E-001	4.1064E-01	1.1257E-01	3.0425E-03	3.0425E-06	grams	kg	0.705
grams							2.7659E+01	2.7659E-02	
7409280		1.1000E-07							
	U-234			activity mBq	activity mCi	activity Ci	SNM	source	
16320		2.610E-001	2.3177E-01	6.3537E-02	1.7172E-03	1.7172E-06	grams	kg	1.12613
grams							2.7697E-04	2.7697E-07	
7409280		6.2000E-03							
	U-235			activity mBq	activity mCi	activity Ci	SNM	source	
16320		4.296E-002	5.5006E-02	1.5080E-02	4.0756E-04	4.0756E-07	grams	kg	0.781
grams							1.8525E-01	1.8525E-04	
7409280		2.2000E-06							
	U-238			activity mBq	activity mCi	activity Ci	SNM	source	
16320		2.610E-001	3.5223E-01	9.6561E-02	2.6097E-03	2.6097E-06	grams	kg	0.741
grams							7.6757E+00	7.6757E-03	
7409280		3.4000E-07							

Totals for all flag 1 data

			corrected	activity mBq	activity mCi	activity Ci	SNM	source	
16320		2.1762E+00	2.4885E+00	6.9568E-01	1.8802E-02	1.8802E-05	grams	kg	flag1 data
			pCi/g	541 will be < than the 540 (MDA not added)			1.8525E-01	3.5336E-02	
129.5238095				data for NORM					
	U-nat		corrected pCi/g	activity mBq	activity mCi	activity Ci		source	
		3.0396E-01	4.0723E-01	1.1164E-01	3.0173E-03	3.0173E-06		kg	
								4.2497E-03	
		7.1000E-07							

U-nat		corrected pCi/g	activity mBq	activity mCi	activity Ci		source	
	2.1762E+00	2.4885E+00	6.9568E-01	1.8802E-02	1.8802E-05		kg total	norm data
							3.1910E-02	

X

container #
9203

shipping check sheet (For Form 540)

	Ac-227		corrected	activity mBq	activity mCi	activity Ci	SNM	source	
		5.844E-002	5.844E-002	1.9300E-02	5.2161E-04	5.2161E-07	grams	kg	
grams			pCi/g				7.2446E-09	7.2446E-12	
8925640		7.2000E+01							
	Pa-231			activity mBq	activity mCi	activity Ci	SNM	source	
19660		5.056E-001	5.056E-001	1.6697E-01	4.5128E-03	4.5128E-06	grams	kg	
grams							9.6017E-05	9.6017E-08	
8925640		4.7000E-02							
	Ra-223			activity mBq	activity mCi	activity Ci	SNM	source	
19660		6.217E-002	6.217E-002	2.0532E-02	5.5491E-04	5.5491E-07	grams	kg	
grams							1.0881E-11	1.0881E-14	
8925640		5.1000E+04							
	Ra-226			activity mBq	activity mCi	activity Ci	SNM	source	
19660		3.383E-001	2.4561E-01	8.1111E-02	2.1922E-03	2.1922E-06	grams	kg	1.37741
grams							2.1922E-06	2.1922E-09	
8925640		1.0000E+00							
	Ra228			activity mBq	activity mCi	activity Ci	SNM	source	
19660		5.636E-001	7.9943E-01	2.6401E-01	7.1354E-03	7.1354E-06	grams	kg	0.705
grams							2.6428E-08	2.6428E-11	
8925640		2.7000E+02							
	Th-227			activity mBq	activity mCi	activity Ci	SNM	source	
19660		5.844E-002	5.844E-002	1.9300E-02	5.2161E-04	5.2161E-07	grams	kg	
grams							1.6826E-11	1.6826E-14	
8925640		3.1000E+04							
	Th-228			activity mBq	activity mCi	activity Ci	SNM	source	
19660		4.680E-001	8.4521E-01	2.7913E-01	7.5440E-03	7.5440E-06	grams	kg	
grams							9.2000E-09	9.2000E-12	0.55371
8925640		8.2000E+02							
	Th-230			activity mBq	activity mCi	activity Ci	SNM	source	
19660		5.636E-001	4.1819E-01	1.3811E-01	3.7326E-03	3.7326E-06	grams	kg	
grams							1.7774E-04	1.7774E-07	1.34771
8925640		2.1000E-02							
	Th-232			activity mBq	activity mCi	activity Ci	SNM	source	
19660		5.636E-001	7.9943E-01	2.6401E-01	7.1354E-03	7.1354E-06	grams	kg	0.705
grams							6.4868E+01	6.4868E-02	
8925640		1.1000E-07							
	U-234			activity mBq	activity mCi	activity Ci	SNM	source	
19660		4.969E+000	4.4125E+00	1.4572E+00	3.9384E-02	3.9384E-05	grams	kg	1.12613
grams							6.3523E-03	6.3523E-06	
8925640		6.2000E-03							
	U-235			activity mBq	activity mCi	activity Ci	SNM	source	
19660		2.256E-001	2.8886E-01	9.5396E-02	2.5783E-03	2.5783E-06	grams	kg	0.781
grams							1.1719E+00	1.1719E-03	
8925640		2.2000E-06							
	U-238			activity mBq	activity mCi	activity Ci	SNM	source	
19660		4.969E+000	6.7058E+00	2.2146E+00	5.9854E-02	5.9854E-05	grams	kg	0.741
grams							1.7604E+02	1.7604E-01	
8925640		3.4000E-07							

Totals for all flag 1 data

			corrected	activity mBq	activity mCi	activity Ci	SNM	source	
19660		1.3345E+01	1.5141E+01	5.0197E+00	1.3567E-01	1.3567E-04	grams	kg	flag1 data
			pCi/g	541 will be < than the 540 (MDA not added)			1.1719E+00	2.4091E-01	
156.031746				data for NORM					
	U-nat		corrected pCi/g	activity mBq	activity mCi	activity Ci		source	
		5.1946E+00	6.9947E+00	2.3100E+00	6.2432E-02	6.2432E-05		kg	
								8.7932E-02	
		7.1000E-07							

U-nat		corrected pCi/g	activity mBq	activity mCi	activity Ci		source	
	1.3345E+01	1.5141E+01	5.0197E+00	1.3567E-01	1.3567E-04		kg total	norm data
							1.5281E-01	

X

container #
9157

shipping check sheet (For Form 540)

	Ac-227		corrected	activity mBq	activity mCi	activity Ci	SNM	source	
		1.097E-001	1.097E-001	3.1271E-02	8.4517E-04	8.4517E-07	grams	kg	
grams			pCi/g				1.1738E-08	1.1738E-11	
7704380		7.2000E+01							
	Pa-231			activity mBq	activity mCi	activity Ci	SNM	source	
16970		1.159E+000	1.159E+000	3.3039E-01	8.9294E-03	8.9294E-06	grams	kg	
grams							1.8999E-04	1.8999E-07	
7704380		4.7000E-02							
	Ra-223			activity mBq	activity mCi	activity Ci	SNM	source	
16970		9.882E-002	9.882E-002	2.8170E-02	7.6135E-04	7.6135E-07	grams	kg	
grams							1.4928E-11	1.4928E-14	
7704380		5.1000E+04							
	Ra-226			activity mBq	activity mCi	activity Ci	SNM	source	
16970		3.349E-001	2.4314E-01	6.9309E-02	1.8732E-03	1.8732E-06	grams	kg	1.37741
grams							1.8732E-06	1.8732E-09	
7704380		1.0000E+00							
	Ra228			activity mBq	activity mCi	activity Ci	SNM	source	
16970		9.881E-001	1.4016E+00	3.9953E-01	1.0798E-02	1.0798E-05	grams	kg	0.705
grams							3.9993E-08	3.9993E-11	
7704380		2.7000E+02							
	TH-227			activity mBq	activity mCi	activity Ci	SNM	source	
16970		1.097E-001	1.097E-001	3.1271E-02	8.4517E-04	8.4517E-07	grams	kg	
grams							2.7264E-11	2.7264E-14	
7704380		3.1000E+04							
	Th-228			activity mBq	activity mCi	activity Ci	SNM	source	
16970		7.596E-001	1.3718E+00	3.9106E-01	1.0569E-02	1.0569E-05	grams	kg	
grams							1.2889E-08	1.2889E-11	0.55371
7704380		8.2000E+02							
	Th-230			activity mBq	activity mCi	activity Ci	SNM	source	
16970		9.881E-001	7.3317E-01	2.0900E-01	5.6486E-03	5.6486E-06	grams	kg	
grams							2.6898E-04	2.6898E-07	1.34771
7704380		2.1000E-02							
	TH-232			activity mBq	activity mCi	activity Ci	SNM	source	
16970		9.881E-001	1.4016E+00	3.9953E-01	1.0798E-02	1.0798E-05	grams	kg	0.705
grams							9.8165E+01	9.8165E-02	
7704380		1.1000E-07							
	U-234			activity mBq	activity mCi	activity Ci	SNM	source	
16970		8.725E+001	7.7478E+01	2.2086E+01	5.9692E-01	5.9692E-04	grams	kg	1.12613
grams							9.6277E-02	9.6277E-05	
7704380		6.2000E-03							
	U-235			activity mBq	activity mCi	activity Ci	SNM	source	
16970		4.657E+000	5.9629E+00	1.6998E+00	4.5940E-02	4.5940E-05	grams	kg	0.781
grams							2.0882E+01	2.0882E-02	
7704380		2.2000E-06							
	U-238			activity mBq	activity mCi	activity Ci	SNM	source	
16970		8.725E+001	1.1775E+02	3.3565E+01	9.0716E-01	9.0716E-04	grams	kg	0.741
grams							2.6681E+03	2.6681E+00	
7704380		3.4000E-07							

Totals for all flag 1 data

			corrected	activity mBq	activity mCi	activity Ci	SNM	source	
16970		1.8469E+02	2.0771E+02	5.9240E+01	1.6011E+00	1.6011E-03	grams	kg	flag1 data
			pCi/g	541 will be < than the 540 (MDA not added)			2.0882E+01	2.7664E+00	
134.6825397				data for NORM					
	U-nat		corrected pCi/g	activity mBq	activity mCi	activity Ci		source	
		9.1907E+01	1.2371E+02	3.5265E+01	9.5310E-01	9.5310E-04		kg	
								1.3424E+00	
		7.1000E-07							

U-nat		corrected pCi/g	activity mBq	activity mCi	activity Ci		source	
	1.8469E+02	2.0771E+02	5.9240E+01	1.6011E+00	1.6011E-03		kg total	norm data
							1.4407E+00	

X

container #
9156

shipping check sheet (For Form 540)

	Ac-227		corrected	activity mBq	activity mCi	activity Ci	SNM	source	
		7.189E-002	7.189E-002	2.0723E-02	5.6007E-04	5.6007E-07	grams	kg	
grams			pCi/g				7.7787E-09	7.7787E-12	
7790640		7.2000E+01							
	Pa-231			activity mBq	activity mCi	activity Ci	SNM	source	
17160		2.449E-001	2.449E-001	7.0593E-02	1.9079E-03	1.9079E-06	grams	kg	
grams							4.0594E-05	4.0594E-08	
7790640		4.7000E-02							
	Ra-223			activity mBq	activity mCi	activity Ci	SNM	source	
17160		6.616E-002	6.616E-002	1.9071E-02	5.1543E-04	5.1543E-07	grams	kg	
grams							1.0106E-11	1.0106E-14	
7790640		5.1000E+04							
	Ra-226			activity mBq	activity mCi	activity Ci	SNM	source	
17160		3.606E-001	2.6180E-01	7.5464E-02	2.0396E-03	2.0396E-06	grams	kg	1.37741
grams							2.0396E-06	2.0396E-09	
7790640		1.0000E+00							
	Ra228			activity mBq	activity mCi	activity Ci	SNM	source	
17160		5.243E-001	7.4369E-01	2.1437E-01	5.7938E-03	5.7938E-06	grams	kg	0.705
grams							2.1459E-08	2.1459E-11	
7790640		2.7000E+02							
	TH-227			activity mBq	activity mCi	activity Ci	SNM	source	
17160		7.189E-002	7.189E-002	2.0723E-02	5.6007E-04	5.6007E-07	grams	kg	
grams							1.8067E-11	1.8067E-14	
7790640		3.1000E+04							
	Th-228			activity mBq	activity mCi	activity Ci	SNM	source	
17160		4.665E-001	8.4250E-01	2.4285E-01	6.5636E-03	6.5636E-06	grams	kg	
grams							8.0044E-09	8.0044E-12	0.55371
7790640		8.2000E+02							
	Th-230			activity mBq	activity mCi	activity Ci	SNM	source	
17160		5.243E-001	3.8903E-01	1.1214E-01	3.0308E-03	3.0308E-06	grams	kg	
grams							1.4432E-04	1.4432E-07	1.34771
7790640		2.1000E-02							
	TH-232			activity mBq	activity mCi	activity Ci	SNM	source	
17160		5.243E-001	7.4369E-01	2.1437E-01	5.7938E-03	5.7938E-06	grams	kg	0.705
grams							5.2671E+01	5.2671E-02	
7790640		1.1000E-07							
	U-234			activity mBq	activity mCi	activity Ci	SNM	source	
17160		2.549E+000	2.2635E+00	6.5246E-01	1.7634E-02	1.7634E-05	grams	kg	1.12613
grams							2.8442E-03	2.8442E-06	
7790640		6.2000E-03							
	U-235			activity mBq	activity mCi	activity Ci	SNM	source	
17160		1.856E-001	2.3764E-01	6.8502E-02	1.8514E-03	1.8514E-06	grams	kg	0.781
grams							8.4155E-01	8.4155E-04	
7790640		2.2000E-06							
	U-238			activity mBq	activity mCi	activity Ci	SNM	source	
17160		2.549E+000	3.4399E+00	9.9158E-01	2.6799E-02	2.6799E-05	grams	kg	0.741
grams							7.8822E+01	7.8822E-02	
7790640		3.4000E-07							

Totals for all flag 1 data

			corrected	activity mBq	activity mCi	activity Ci	SNM	source	
17160		8.1384E+00	9.3047E+00	2.7028E+00	7.3050E-02	7.3050E-05	grams	kg	flag1 data
			pCi/g	541 will be < than the 540 (MDA not added)			8.4155E-01	1.3150E-01	
136.1904762				data for NORM					
	U-nat		corrected pCi/g	activity mBq	activity mCi	activity Ci		source	
		2.7346E+00	3.6776E+00	1.0601E+00	2.8651E-02	2.8651E-05		kg	
								4.0353E-02	
		7.1000E-07							

	U-nat		corrected pCi/g	activity mBq	activity mCi	activity Ci		source	
		8.1384E+00	9.3047E+00	2.7028E+00	7.3050E-02	7.3050E-05		kg total	norm data
								9.3027E-02	

A

Posillico Bros. Asphalt Co.

1610 New Highway, Farmingdale, N.Y. 11735
Plant Tele: 293-2620, 2621

HOT STORAGE

11:10 4-21-05 TICKET NUMBER 9222

20780 lb GROSS

Posillico Bros. Asphalt Co.

1610 New Highway, Farmingdale, N.Y. 11735
Plant Tele: 293-2620, 2621

HOT STORAGE

16:00 4-18-05 TICKET NUMBER ~~2923~~ 9223

21250 lb GROSS

Posillico Bros. Asphalt Co.

1610 New Highway, Farmingdale, N.Y. 11735
Plant Tele: 293-2620, 2621

HOT STORAGE

12:52 10-20-04 TICKET NUMBER 9138

16400 lb GROSS

Posillico Bros. Asphalt Co.

1610 New Highway, Farmingdale, N.Y. 11735
Plant Tele: 293-2620, 2621

HOT STORAGE

7:54 5-10-05 TICKET NUMBER 9199

20110 lb GROSS

Posillico Bros. Asphalt Co.

1610 New Highway, Farmingdale, N.Y. 11735
Plant Tele: 293-2620, 2621

HOT STORAGE

10:30 5-09-05 TICKET NUMBER 9198

12460 lb GROSS

Posillico Bros. Asphalt Co.

1610 New Highway, Farmingdale, N.Y. 11735
Plant Tele: 293-2620, 2621

HOT STORAGE

15:43 10-07-04 TICKET NUMBER 9146

22900 lb GROSS

MOQ*

FORM 540 — Envirocare of Utah, Inc.

UNIFORM LOW-LEVEL RADIOACTIVE WASTE MANIFEST

SHIPPING PAPER

1. EMERGENCY TELEPHONE NUMBER (Include Area Code): 1-800-424-9300

ORGANIZATION: Chemtrec

2. IS THIS AN "EXCLUSIVE USE" SHIPMENT? ☐ YES ☑ NO

3. TOTAL NUMBER OF PACKAGES IDENTIFIED ON THIS MANIFEST: 4

4. DOES EPA REGULATED WASTE REQUIRING A MANIFEST ACCOMPANY THIS SHIPMENT? ☐ YES ☑ NO
If "Yes," provide Manifest Number ==>

EPA MANIFEST NUMBER

5. SHIPPER – NAME AND FACILITY
GTEOSI
140 Cantiague Rock RD
Hicksville, NY 11801

Utah Generator Site Access Permit No.: 020 500 1352

SHIPMENT NUMBER: MHFX-5227

CONTACT: Jean Agostinelli

6. CARRIER – Name and Address
Priority Transport Services, Inc.
391 Anthony Street
Schenectady, NY 12308

CONTACT: Dispatch

SIGNATURE – Authorized carrier acknowledging waste receipt

SHIPPER I.D. NUMBER: 0840-01-986

☐ COLLECTOR
☐ PROCESSOR
☑ GENERATOR TYPE (Specify) 1

TELEPHONE NUMBER (Include Area Code): 516-932-9157

EPA I.D. NUMBER: NYR000104976

SHIPPING DATE: 05/19/2005

TELEPHONE (Include Area Code): 800-235-8069

DATE: 5-19-05

7. FORM 540 AND 540A — PAGE 1 OF 2 PAGE(S)
FORM 541 AND 541A — 3 PAGE(S)
FORM 542 AND 542A — None PAGE(S)
ADDITIONAL INFORMATION — None PAGE(S)

8. MANIFEST NUMBER (Use this number on all continuation pages): 0840-01-986

9. CONSIGNEE - Name and Facility
Envirocare of Utah, Inc.
Clive Disposal Site (Bulk Waste Facility)
Interstate 80, Exit 49
Clive, UT 84029

CONTACT: Shipping and Receiving

TELEPHONE (Include Area Code): (435)884-0155

SIGNATURE – Authorized consignee acknowledging waste receipt: 184920

DATE: 6-3-05

10. CERTIFICATION
This is to certify that the herein-named materials are properly classified, described, packaged, marked, and labeled and are in proper condition for transportation according to the applicable regulations of the Department of Transportation. This also certifies that the materials are classified, packaged, marked, and labeled and are in proper condition for transportation and disposal as described in accordance with the requirements of 10 CFR Parts 20 and 61, or equivalent state regulations.

AUTHORIZED SIGNATURE:

TITLE: Broker

DATE: 5-19-05

11. U.S. DEPARTMENT OF TRANSPORTATION DESCRIPTION (Including proper shipping name, hazard class, UN ID number, and any additional information)	12. DOT LABEL "RADIOACTIVE"	13. TRANSPORT INDEX	14. PHYSICAL AND CHEMICAL FORM	15. INDIVIDUAL RADIONUCLIDES	16. TOTAL PACKAGE ACTIVITY MBq	mCi	17. LSA/SCO CLASS	18. TOTAL WEIGHT OR VOLUME (Use appropriate units)	19. IDENTIFICATION NUMBER OF PACKAGE
Soil,DOT Non-Regulated, containing Radionuclides	NA	NA	Solid / OXIDES	Ac-227 Pa-231 Ra-223 Ra-226 Ra-228 Th-227 Th-228 Th-230 Th-232 U-234 U-Nat	1.0528E+00	2.8454E-02	NA	17490 LBS; 138.17 FT3	9189
Soil,DOT Non-Regulated, containing Radionuclides	NA	NA	Solid / OXIDES	Ac-227 Pa-231 Ra-223 Ra-226 Ra-228 Th-227 Th-228 Th-230 Th-232 U-234 U-Nat	1.6962E+00	4.5844E-02	NA	16670 LBS; 131.67 FT3	9196
Soil,DOT Non-Regulated, containing Radionuclides	NA	NA	Solid / OXIDES	Ac-227 Pa-231 Ra-223 Ra-226 Ra-228 Th-227 Th-228 Th-230 Th-232 U-234 U-Nat	2.1427E+00	5.7910E-02	NA	13750 LBS; 108.49 FT3	9215

FOR CONSIGNEE USE ONLY

- ___ Record Waste Description Inadequate
- ___ Contamination or Leakage Detected
- ___ Unexpected Exposure Rates Detected
- ___ Labels, Markings, etc. Inadequate
- ___ Container Integrity Inadequate
- ___ Other
- ✓ No Violations Detected on this Shipment

20. TERMS AND CONDITIONS

A. HAZARDOUS MATERIALS: Generator represents & warrants that Waste Material __ is (or) ✓ is not a hazardous waste as defined in 40 CFR 261. Where the material is a hazardous waste, this shipment is also accompanied by a separate and completed hazardous waste manifest, along with the appropriate land-disposal restriction notice and/or certification as required by 40 CFR 268.1.

B. TITLE: Upon acceptance at the disposal site by Envirocare of Utah, Inc., and all appropriate regulatory authorities, title to the Waste Material which conforms to Generator's representations herein shall thereupon transfer from Generator and be vested in Envirocare of Utah, Inc.

C. WASTE MATERIAL: Generator represents and warrants that all data set forth in this (UNIFORM LOW-LEVEL RADIOACTIVE WASTE MANIFEST) are true and correct in all respects and in accordance with all applicable governmental laws, rules, regulations and Envirocare of Utah Inc.'s facility license.

D. INDEMNIFICATION: Generator agrees to indemnify Envirocare of Utah, Inc., its officers, employees and agents against all losses and liability whatsoever if such losses or liability results from the failure of the Waste Material to conform in all material respects to the data supplied on the (UNIFORM LOW-LEVEL RADIOACTIVE WASTE MANIFEST.) or if this shipment fails to meet the standards prescribed by the Department of Transportation or any governmental agency having jurisdiction over such matters

FORM 540 (04-03)

FORM 540 — **Envirocare of Utah, Inc.**

UNIFORM LOW-LEVEL RADIOACTIVE WASTE MANIFEST

SHIPPING PAPER

1. EMERGENCY TELEPHONE NUMBER (Include Area Code): 1-800-424-9300

ORGANIZATION: Chemtrec

2. IS THIS AN "EXCLUSIVE USE" SHIPMENT? ☐ YES ☑ NO

3. TOTAL NUMBER OF PACKAGES IDENTIFIED ON THIS MANIFEST =====> 4

4. DOES EPA REGULATED WASTE REQUIRING A MANIFEST ACCOMPANY THIS SHIPMENT? ☐ YES ☑ NO
If "Yes," provide Manifest Number =====>

EPA MANIFEST NUMBER

5. SHIPPER -- NAME AND FACILITY
GTEOSI
140 Cantiague Rock RD
Hicksville, NY 11801

SHIPPER I.D. NUMBER: 0840-01-986
☐ COLLECTOR
☐ PROCESSOR

Utah Generator Site Access Permit No.: 020 500 1352
SHIPMENT NUMBER: MHFX-5227
☑ GENERATOR TYPE (Specify) I

CONTACT: Jean Agostinelli
TELEPHONE NUMBER (Include Area Code): 516-932-9157

6. CARRIER -- Name and Address
Priority Transport Services, Inc.
391 Anthony Street
Schenectady, NY 12308

EPA I.D. NUMBER: NYR000104976
SHIPPING DATE: 05/19/2005

CONTACT: Dispatch
TELEPHONE (Include Area Code): 800-235-0069

SIGNATURE -- *Authorized carrier acknowledging waste receipt*
DATE: 5-19-05

7. FORM 540 AND 540A — PAGE 1 OF 2 PAGE(S)
FORM 541 AND 541A — 3 PAGE(S)
FORM 542 AND 542A — None PAGE(S)
ADDITIONAL INFORMATION — None PAGE(S)

8. MANIFEST NUMBER (Use this number on all continuation pages): 0840-01-986

9. CONSIGNEE - Name and Facility
Envirocare of Utah, Inc.
Clive Disposal Site (Bulk Waste Facility)
Interstate 80, Exit 49
Clive, UT 84029

CONTACT: Shipping and Receiving
TELEPHONE (Include Area Code): (435)884-0155

SIGNATURE -- *Authorized consignee acknowledging waste receipt*
DATE

10. CERTIFICATION
This is to certify that the herein-named materials are properly classified, described, packaged, marked, and labeled and are in proper condition for transportation according to the applicable regulations of the Department of Transportation. This also certifies that the materials are classified, packaged, marked, and labeled and are in proper condition for transportation and disposal as described in accordance with the requirements of 10 CFR Parts 20 and 61, or equivalent state regulations.

AUTHORIZED SIGNATURE: [signature] TITLE: Broker DATE: 5-19-05

11. U.S. DEPARTMENT OF TRANSPORTATION DESCRIPTION (Including proper shipping name, hazard class, UN ID number, and any additional information)	12. DOT LABEL "RADIOACTIVE"	13. TRANSPORT INDEX	14. PHYSICAL AND CHEMICAL FORM	15. INDIVIDUAL RADIONUCLIDES	16. TOTAL PACKAGE ACTIVITY MBq	16. TOTAL PACKAGE ACTIVITY mCi	17. LSA/SCO CLASS	18. TOTAL WEIGHT OR VOLUME (Use appropriate units)	19. IDENTIFICATION NUMBER OF PACKAGE
Soil,DOT Non-Regulated, containing Radionuclides	NA	NA	Solid / OXIDES	Ac-227 Pa-231 Ra-223 Ra-226 Ra-228 Th-227 Th-228 Th-230 Th-232 U-234 U-Nat	1.0528E+00	2.8454E-02	NA	17490 LBS; 138.17 FT3	9189
Soil,DOT Non-Regulated, containing Radionuclides	NA	NA	Solid / OXIDES	Ac-227 Pa-231 Ra-223 Ra-226 Ra-228 Th-227 Th-228 Th-230 Th-232 U-234 U-Nat	1.6962E+00	4.5844E-02	NA	16670 LBS; 131.67 FT3	9196
Soil,DOT Non-Regulated, containing Radionuclides	NA	NA	Solid / OXIDES	Ac-227 Pa-231 Ra-223 Ra-226 Ra-228 Th-227 Th-228 Th-230 Th-232 U-234 U-Nat	2.1427E+00	5.7910E-02	NA	13750 LBS; 108.49 FT3	9215

FOR CONSIGNEE USE ONLY

____ Record Waste Description Inadequate
____ Contamination or Leakage Detected
____ Unexpected Exposure Rates Detected
____ Labels, Markings, etc. Inadequate
____ Container Integrity Inadequate
____ Other
____ No Violations Detected on this Shipment

20. TERMS AND CONDITIONS

A. HAZARDOUS MATERIALS: Generator represents & warrants that Waste Material __ is (or) ✓ is not a hazardous waste as defined in 40 CFR 261. Where the material is a hazardous waste, this shipment is also accompanied by a separate and completed hazardous waste manifest, along with the appropriate land-disposal restriction notice and/or certification as required by 40 CFR 268.1.

B. TITLE: Upon acceptance at the disposal site by Envirocare of Utah, Inc., and all appropriate regulatory authorities, title to the Waste Material which conforms to Generator's representations herein shall thereupon transfer from Generator and be vested in Envirocare of Utah, Inc.

C. WASTE MATERIAL: Generator represents and warrants that all data set forth in this (UNIFORM LOW-LEVEL RADIOACTIVE WASTE MANIFEST) are true and correct in all respects and in accordance with all applicable governmental laws, rules, regulations and Envirocare of Utah Inc.'s facility license.

D. INDEMNIFICATION: Generator agrees to indemnify Envirocare of Utah, Inc., its officers, employees and agents against all losses and liability whatsoever if such losses or liability results from the failure of the Waste Material to conform in all material respects to the data supplied on the (UNIFORM LOW-LEVEL RADIOACTIVE WASTE MANIFEST,) or if this shipment fails to meet the standards prescribed by the Department of Transportation or any governmental agency having jurisdiction over such matters.

FORM 540A

Envirocare of Utah, Inc.

UNIFORM LOW-LEVEL RADIOACTIVE WASTE MANIFEST

SHIPPING PAPER (CONTINUATION)

8. MANIFEST NUMBER
(Use this number on all continuation pages)
0840-01-986

11. U.S. DEPARTMENT OF TRANSPORTATION DESCRIPTION (Including proper shipping name, hazard class, UN ID number, and any additional information)	12. DOT LABEL "RADIOACTIVE"	13. TRANSPORT INDEX	14. PHYSICAL AND CHEMICAL FORM	15. INDIVIDUAL RADIONUCLIDES				16. TOTAL PACKAGE ACTIVITY MBq	mCi	17. LSA/SCO CLASS	18. TOTAL WEIGHT OR VOLUME (Use appropriate units)	19. IDENTIFICATION NUMBER OF PACKAGE
Soil,DOT Non-Regulated, containing Radionuclides	NA	NA	Solid / OXIDES	Ac-227	Pa-231	Ra-223	Ra-226	2.7067E+00	7.3155E-02	NA	19950 LBS; 157.7 FT3	9225
				Ra-228	Th-227	Th-228	Th-230					
				Th-232	U-234	U-Nat						

FORM 540A (04-03)

FORM 541 Envirocare of Utah, Inc.

UNIFORM LOW-LEVEL RADIOACTIVE WASTE MANIFEST

CONTAINER AND WASTE DESCRIPTION

Additional Nuclear Regulatory Commission (NRC) Requirements for Control, Transfer and Disposal of Radioactive Waste

1. MANIFEST TOTALS

NUMBER OF PACKAGES/ DISPOSAL CONTAINERS	NET WASTE VOLUME		NET WASTE WEIGHT		SPECIAL NUCLEAR MATERIAL (grams) U-233	U-235	Pu	Total
4	m3	15.1787	kg	30635.6307	NP	NP	NP	NP
	ft3	536.0300	ton	33.7700				

ACTIVITY	ALL NUCLIDES	TRITIUM	C-14	Tc-99	I-129	SOURCE (kg)	
MBq	7.2258E+00	NP	NP	NP	NP	(kg)	2.5041E-01
mCi	1.9529E-01	NP	NP	NP	NP	(tons)	2.7603E-04

2. MANIFEST NUMBER 0840-01-986

3. PAGE 1 OF 3 PAGE(S)

4. SHIPPER NAME GTEOSI

SHIPMENT ID NUMBER 0840-01-986

DISPOSAL CONTAINER DESCRIPTION							WASTE DESCRIPTION FOR EACH WASTE TYPE IN CONTAINER										
5. CONTAINER IDENTIFICATION NUMBER/ GENERATOR ID NUMBER(S)	6. CONTAINER DESCRIPTION (See Note 1 & Note 1A)	7. VOLUME (m3)/(ft3)	8. WASTE AND CONTAINER WEIGHT (kg)/(ton)	9. SURFACE RADIATION LEVEL (mSv/hr)/(mrem/hr)	10. SURFACE CONTAMINATION (MBq/100 cm2)/(dpm/100cm2) ALPHA	BETA-GAMMA	PHYSICAL DESCRIPTION 11. WASTE DESCRIPTOR (See Note 2 & Note 2A)	12. APPROXIMATE WASTE VOLUME(S) IN CONTAINER (m3)/(FT3)	13. SOLIDIFICATION OR STABILIZATION MEDIA (See Note 3)	14. CHEMICAL DESCRIPTION CHEMICAL FORM/ CHELATING AGENT	WEIGHT % CHELATING AGENT IF > 0.1%	15. RADIOLOGICAL DESCRIPTION INDIVIDUAL RADIONUCLIDES AND ACTIVITY (MBq) AND CONTAINER TOTAL; OR CONTAINER TOTAL ACTIVITY AND RADIONUCLIDE PERCENT RADIONUCLIDES	pCi/gm	MBq	mCi	16. WASTE CLASSIFICATION AS-Class A Stable AU-Class A Unstable B-Class B C-Class C
9189/GTEOSI	19 Strong Tight Container Loaded in Gondola	3.9125	7933.3311	0.0001	<3.6740E-06	<3.6740E-05	22,59-CONCRETE,59 -MISC DEBRIS-HJ	3.9125	100	OXIDES/NONE	0.00	Ac-227	8.14200E-02	2.3812E-02	6.4356E-04	AU
												Pa-231	3.43300E-01	1.0040E-01	2.7135E-03	
												Ra-223	5.82700E-02	1.7041E-02	4.6057E-04	
		138.1700	8.7450	0.0060	<2.2000E+02	<2.2000E+03		138.1700				Ra-226	1.34020E-01	3.9194E-02	1.0593E-03	
												Ra-228	3.71631E-01	1.0868E-01	2.9374E-03	
												Th-227 [2.0760E-14 kg]	8.14200E-02	2.3812E-02	6.4356E-04	
												Th-228 [4.3800E-12 kg]	4.54389E-01	1.3289E-01	3.5916E-03	
												Th-230 [7.3171E-08 kg]	1.94404E-01	5.6854E-02	1.5366E-03	
												Th-232 [2.6704E-02 kg]	3.71631E-01	1.0868E-01	2.9374E-03	
												U-234 [6.6532E-07 kg]	5.21876E-01	(1.5263E-01)	(4.1250E-03)	
												U-Nat [1.0993E-02 kg]	9.87484E-01	2.8879E-01	7.8052E-03	
												Subtotal		9.0015E-01	2.4329E-02	
												Total		9.0015E-01	2.4329E-02	
												Source [3.7698E-02 kg]				
9196/GTEOSI	19 Strong Tight Container Loaded in Gondola	3.7285	7561.3853	0.0001	<3.6740E-06	<3.6740E-05	22,59-CONCRETE,59 -MISC DEBRIS-HJ	3.7285	100	OXIDES/NONE	0.00	Ac-227	3.55100E-02	(9.8960E-03)	(2.6746E-04)	AU
												Pa-231	2.22800E-01	(6.2090E-02)	(1.6781E-03)	
												Ra-223	1.17100E-01	3.2633E-02	8.8198E-04	
		131.6700	8.3350	0.0070	<2.2000E+02	<2.2000E+03		131.6700				Ra-226	2.19252E-01	6.1102E-02	1.6514E-03	
												Ra-228	6.30638E-01	1.7575E-01	4.7499E-03	
												Th-227 [8.6276E-15 kg]	3.55100E-02	(9.8960E-03)	(2.6746E-04)	
												Th-228 [6.6802E-12 kg]	7.27276E-01	2.0267E-01	5.4777E-03	
												Th-230 [1.1832E-07 kg]	3.29893E-01	9.1934E-02	2.4847E-03	
												Th-232 [4.3181E-02 kg]	6.30638E-01	1.7575E-01	4.7499E-03	

Note 1: Container Description Codes. For containers/ waste requiring disposal in approved structural over-packs the numerical code must be followed by "-OP."

1. Wooden Box or Crate
2. Metal Box
3. Plastic Drum or Pail
4. Metal Drum or Pail
5. Metal Tank or Liner
6. Concrete Tank or Liner
7. Polyethlene Tank or Liner
8. Fiberglass Tank or Liner
9. Demineralizer
10. Gas Cylinder
11. Bulk, Unpackaged Waste
12. Unpackaged Components
13. High Integrity Container
19. Other. Describe in Item 6, or additional page

Note 1A: Bulk Packaging Description Codes. (Choose one code as may be applicable.)

A Gondola
B Intermodal
C End-Dump
D Roll-off
E Seavan

NOTE 2: Waste Descriptor Codes. (Choose up to three which predominate by volume.)

20. Charcoal
21. Incinerator Ash
22. Soil
23. Gas
24. Oil
25. Aqueous Liquid
26. Filter Media
27. Mechanical Filter
28. EPA or State Hazardous
29. Demolition Rubble
30. Cation Ion-exchange Media
31. Anion Ion-exchange Media
32. Mixed Bed Ion-exchange Media
33. Contaminated Equipment
34. Organic Liquid (except oil)
35. Glassware or Labware
36. Sealed Source/Device
37. Paint or Plating
38. Evaporator Bottoms/Sludges/ Concentrates
39. Compactible Trash
40. Noncompactible Trash
41. Animal Carcass
42. Biological Material (except animal carcass)
43. Activated Material
59. Other. Describe in item 11, or additional page

NOTE 2A: Specific Waste Descriptions (Choose all applicable codes.)

G Dewatered
H Solid
I Combustible
J Non-combustible
K Air Filtration Filters
L Asbestos

Note3: Solidification and Stabilization Media Codes. (Choose up to three which predominate by volume.) For media meeting disposal site structural stability requirements, the numerical code must be followed by "-S." and the media vendor and brand name must also be identified

In Item 13. Code 100=NONE REQUIRED.

Solidification

90. Cement
91. Concrete (encapsulation)
92. Bitumen
93. Vinyl Chloride
94. Vinyl Ester Styrene
99. Other. Describe in item 13, or additional page
100. None Required.

FORM 541A

UNIFORM LOW-LEVEL RADIOACTIVE WASTE MANIFEST

CONTAINER AND WASTE DESCRIPTION (CONTINUATION)

Envirocare of Utah, Inc.

2. MANIFEST NUMBER 0840-01-986

DISPOSAL CONTAINER DESCRIPTION							WASTE DESCRIPTION FOR EACH WASTE TYPE IN CONTAINER									
							PHYSICAL DESCRIPTION			14. CHEMICAL DESCRIPTION		15. RADIOLOGICAL DESCRIPTION				16. WASTE CLASSIFICATION AS-Class A Stable AU-Class A Unstable B-Class B C-Class C
5. CONTAINER IDENTIFICATION NUMBER/ GENERATOR ID NUMBER(S)	6. CONTAINER DESCRIPTION (See Note 1 & Note 1A)	7. VOLUME (m3)/(ft3)	8. WASTE AND CONTAINER WEIGHT (kg)/(lon)	9. SURFACE RADIATION LEVEL (mSv/hr)/(mrem/hr)	10. SURFACE CONTAMINATION (MBq/100 cm2)/(dpm/100cm2) ALPHA	BETA-GAMMA	11. WASTE DESCRIPTOR (See Note 2 & Note 2A)	12. APPROXIMATE WASTE VOLUME(S) IN CONTAINER (m3)/(FT3)	13. SOLIDIFICATION OR STABILIZATION MEDIA (See Note 3)	CHEMICAL FORM/ CHELATING AGENT	WEIGHT % CHELATING AGENT IF > 0.1%	INDIVIDUAL RADIONUCLIDES AND ACTIVITY (MBq) AND CONTAINER TOTAL; OR CONTAINER TOTAL ACTIVITY AND RADIONUCLIDE PERCENT: RADIONUCLIDES	pCi/gm	MBq	mCi	
												U-234 [1.4196E-06 kg]	1.16860E+00	3.2567E-01	8.8018E-03	
												U-Nat [2.0892E-02 kg]	1.96945E+00	5.4886E-01	1.4834E-02	
												Subtotal		1.6144E+00	4.3631E-02	
												Total		1.6144E+00	4.3631E-02	
												Source [6.4075E-02 kg]				
9215/GTEOSI	19 Strong Tight Container Loaded in Gondola	3.0721	6236.8955	0.0001	<3.6740E-06	<3.6740E-05	22,59-CONCRETE,59 -MISC DEBRIS-HJ	3.0721	100	OXIDES/NONE	0.00	Ac-227	4.04800E-02	(9.2955E-03)	(2.5123E-04)	AU
		108.4900	6.8750	0.0060	<2.2000E+02	<2.2000E+03		108.4900				Pa-231	2.30000E-01	5.2814E-02	1.4274E-03	
												Ra-223	8.65600E-02	1.9877E-02	5.3721E-04	
												Ra-226	1.90357E-01	4.3712E-02	1.1814E-03	
												Ra-228	5.16454E-01	1.1859E-01	3.2052E-03	
												Th-227 [8.1041E-15 kg]	4.04800E-02	(9.2955E-03)	(2.5123E-04)	
												Th-228 [4.4082E-12 kg]	5.82435E-01	1.3374E-01	3.6147E-03	
												Th-230 [7.9842E-08 kg]	2.70162E-01	6.2038E-02	1.6767E-03	
												Th-232 [2.9138E-02 kg]	5.16454E-01	1.1859E-01	3.2052E-03	
												U-234 [2.6258E-06 kg]	2.62314E+00	6.0236E-01	1.6280E-02	
												U-Nat [3.7014E-02 kg]	4.23452E+00	9.7236E-01	2.6280E-02	
												Subtotal		2.1241E+00	5.7408E-02	
												Total		2.1241E+00	5.7408E-02	
												Source [6.6155E-02 kg]				
9225/GTEOSI	19 Strong Tight Container Loaded in Gondola	4.4656	9049.1684	0.0001	<3.6740E-06	<3.6740E-05	22,59-CONCRETE,59 -MISC DEBRIS-HJ	4.4656	100	OXIDES/NONE	0.00	Ac-227	4.87500E-02	(1.6271E-02)	(4.3977E-04)	AU
		157.7000	9.9750	0.0050	<2.2000E+02	<2.2000E+03		157.7000				Pa-231	2.19600E-01	(7.3297E-02)	(1.9810E-03)	
												Ra-223	4.11100E-02	(1.3721E-02)	(3.7085E-04)	
												Ra-226	1.78015E-01	5.9418E-02	1.6059E-03	
												Ra-228	4.22411E-01	1.4099E-01	3.8106E-03	
												Th-227 [1.4186E-14 kg]	4.87500E-02	(1.6271E-02)	(4.3977E-04)	
												Th-228 [5.1518E-12 kg]	4.68296E-01	1.5631E-01	4.2245E-03	
												Th-230 [9.4921E-08 kg]	2.20967E-01	7.3752E-02	1.9933E-03	
												Th-232 [3.4642E-02 kg]	4.22411E-01	1.4099E-01	3.8106E-03	
												U-234 [3.3089E-06 kg]	2.27416E+00	7.5906E-01	2.0515E-02	
												U-Nat [4.7836E-02 kg]	3.76498E+00	1.2567E+00	3.3964E-02	
												Subtotal		2.5872E+00	6.9924E-02	
												Total		2.5872E+00	6.9924E-02	

FORM 541A

UNIFORM LOW-LEVEL RADIOACTIVE WASTE MANIFEST

CONTAINER AND WASTE DESCRIPTION (CONTINUATION)

Envirocare of Utah, Inc.

2. MANIFEST NUMBER 0840-01-986

3. PAGE 3 OF 3 PAGE(S)

DISPOSAL CONTAINER DESCRIPTION							WASTE DESCRIPTION FOR EACH WASTE TYPE IN CONTAINER									
							PHYSICAL DESCRIPTION			14. CHEMICAL DESCRIPTION		15. RADIOLOGICAL DESCRIPTION				16. WASTE CLASSIFICATION AS-Class A Stable AU-Class A Unstable B-Class B C-Class C
5. CONTAINER IDENTIFICATION NUMBER/ GENERATOR ID NUMBER(S)	6. CONTAINER DESCRIPTION (See Note 1 & Note 1A)	7. VOLUME (m3)/(ft3)	8. WASTE AND CONTAINER WEIGHT (kg)/(ton)	9. SURFACE RADIATION LEVEL (mSv/hr)/(mrem/hr)	10. SURFACE CONTAMINATION (MBq/100 cm2)/(dpm/100cm2) ALPHA	BETA-GAMMA	11. WASTE DESCRIPTOR (See Note 2 & Note 2A)	12. APPROXIMATE WASTE VOLUME(S) IN CONTAINER (m3)/(FT3)	13. SOLIDIFICATION OR STABILIZATION MEDIA (See Note 3)	CHEMICAL FORM/ CHELATING AGENT	WEIGHT % CHELATING AGENT IF > 0.1%	INDIVIDUAL RADIONUCLIDES AND ACTIVITY (MBq) AND CONTAINER TOTAL; OR CONTAINER TOTAL ACTIVITY AND RADIONUCLIDE PERCENT: RADIONUCLIDES	pCi/gm	MBq	mCi	
												Source [8.2481E-02 kg]				
Shipment Totals		15.1787	30780.7803									Source [2.5041E-01 kg]		7.2258E+00	1.9529E-01	
		536.0300	33.9300													

FORM 541A (04-03)

Envirocare of Utah, Inc.

ADDITIONAL NOTES

Manifest Number
0840-01-986
PAGE 1

New York State Waste Transporter Part 364 permit No. 4A-288
New York State Waste Transporter Part 381 permit Number 4A-288

UNIFORM LOW-LEVEL RADIOACTIVE WASTE MANIFEST
ISOTOPES REPORT

For Manifest # 0840-01-986
Envirocare of Utah, Inc.

	Total Activity		
Isotope	**(MBq)**	**(mCi)**	**(Ci)**
Ac-227	5.9274E-02	1.6020E-03	1.6020E-06
Pa-231	2.8860E-01	7.8000E-03	7.8000E-06
Ra-223	8.3273E-02	2.2506E-03	2.2506E-06
Ra-226	2.0342E-01	5.4980E-03	5.4980E-06
Ra-228	5.4401E-01	1.4703E-02	1.4703E-05
Th-227	5.9274E-02	1.6020E-03	1.6020E-06
Th-228	6.2561E-01	1.6908E-02	1.6908E-05
Th-230	2.8458E-01	7.6913E-03	7.6913E-06
Th-232	5.4401E-01	1.4703E-02	1.4703E-05
U-234	1.8397E+00	4.9722E-02	4.9722E-05
U-Nat	3.0667E+00	8.2883E-02	8.2883E-05

ENVIROCARE *OF UTAH, LLC.*

THE SAFE ALTERNATIVE

CERTIFICATE OF DISPOSAL

GTE Operations Support Inc., Irving

This Certificate acknowledges that the following manifested shipments:

Shipment	Disposal Location	Date	Shipment	Disposal Location	Date
0840-01-0977	Class A	06/10/05 11:58:51	0840-01-0981	Class A	06/10/05 11:34:19
0840-01-0982	Class A	06/10/05 11:58:51	0840-01-0983	Class A	06/10/05 11:34:19
0840-01-0984	Class A	06/10/05 10:04:57	0840-01-0985	Class A	06/10/05 10:04:57
0840-01-0986	Class A	06/10/05 11:34:19	0840-04-0029	Class A	06/10/05 11:58:51

Representing 9,190.86 cubic feet of waste has been disposed of at the above listed Disposal Facility. Disposal is subject to Envirocare's Radioactive Material License, all other applicable licenses, permits and regulations, and the Disposal Agreement.

Brent Anderson
Director of LLRW Operations

6/14/05
Date

605 N. 5600 W, Salt Lake City, Utah 84116 Telephone (801) 532-1330

Shipment Survey

Survey Number: GTEOSI-05-00328 Date: 4-21-05 Time: 16:55

Waste Container Type: Super Sack Intermodal Other: Soil

Waste Container ID #: 9189 Storage Bin: — Gross Weight: 17,490 lbs

	Ludlum 3030		Ludlum 3030		Ludlum 3030		Ludlum MoD. 19
Serial #	190646		196165				193615
Probe #	N/A		N/A				N/A
Calibration Due Date:	13 Dec 05		18 July 05				29 Mar 06
	α	β	α	β	α	β	
Background	0 cpm	25 cpm	0 cpm	25 cpm	cpm	cpm	5 μR/hr
Efficiency	29 %	25 %	29 %	25 %	%	%	
MDA	25 dpm	130 dpm	25 dpm	130 dpm	dpm	dpm	

N/A

Maximum Contact Dose Rate: 0.006 mrem/hr Transport Index: 0.0 mrem/hr

	α cpm	α dpm/100 cm2	β cpm	β dpm/100 cm2
ALARA Limit	N/A	60	N/A	500
Smear #				
1	0	LMDA	27	LMDA
2	0		26	
3	0		35	
4	0		21	
5	0		32	
6	1	LMDA	25	LMDA

Smear Locations: 1 - Bottom 2 - Front 3 - Right Side 4 - Back 5 - Left Side 6 - Top

George Economos
Surveyor Name

George Economos
Surveyor Signature

Supervisor Approval

29135-S-U07XX9189-99.9
Date: 04/01/05 Time:0844

4-21-05 16:55 Bag# 9189
17490 lb GR
042105 1655 9189 0017490

Shipment Survey

Survey Number: GTEOSI-05-00336 Date: 5-9-05 Time: 11:15

Waste Container Type: Super Sack Intermodal Other: Soil

Waste Container ID #: 9196 Storage Bin: — Gross Weight: 16,670 lbs

	Ludlum 3030		Ludlum 3030		Ludlum 3030		L-19
Serial #	190646		196165		N		196118
Probe #	N/A		N/A				N/A
Calibration Due Date:	12-13-05		7-18-05				10 Aug 05
	α	β	α	β	α	β	γ
Background	0 cpm	25 cpm	0 cpm	25 cpm	cpm	cpm	5 μR/hr
Efficiency	29 %	25 %	29 %	25 %	%	%	
MDA	25 dpm	130 dpm	25 dpm	130 dpm	dpm	A dpm	

Maximum Contact Dose Rate: 0.007 mrem/hr Transport Index: 0.0 mrem/hr

	α cpm	α dpm/100 cm2	β cpm	β dpm/100 cm2
ALARA Limit	N/A	60	N/A	500
Smear #				
1	0	< MDA	0	< MDA
2	0		0	
3	0		4	
4	0		0	
5	0		0	
6	0	< MDA	6	< MDA

Smear Locations: 1 - Bottom 2 - Front 3 - Right Side 4 - Back 5 - Left Side 6 - Top

JAMES WELLS — James Wells
Surveyor Name — Surveyor Signature

George Economos
Supervisor Approval

30818-S-XXL169196-99.9
Date: 05/04/05 Time:1104

5-09-05 11:00 Bag# 9196
16670 lb GR
050905 1100 9196 0016670

BagNum	MANIFEST GROSS WEIGHT
9215	13750

Shipm Survey

Survey Number: GTEOSI-05-00311 Date: 1-27-05 Time: 10:25

Waste Container Type: (Super Sack) Intermodal Other: Waste

Waste Container ID #: 9215 Storage Bin: 42C Gross Weight: 13750 lbs

	Ludlum 3030		Ludlum 3030		Ludlum 3030		Ludlum Mod. 19
Serial #	190646		191265				193615
Probe #	N/A		N/A		N/A		N/A
Calibration Due Date:	12-13-05		4-20-05				19 May 05
	α	β	α	β	α	β	
Background	0 cpm	25 cpm	0 cpm	25 cpm	cpm	cpm	5 μR/hr
Efficiency	29 %	25 %	29 %	25 %	%	N/A %	
MDA	25 dpm	130 dpm	25 dpm	130 dpm	dpm	dpm	

Maximum Contact Dose Rate: 0.006 mrem/hr Transport Index: 0.0 mrem/hr

	α cpm	α dpm/100 cm2	β cpm	β dpm/100 cm2
ALARA Limit	N/A	60	N/A	500
Smear #				
1	0	LMDA	38	LMDA
2	0		31	
3	0		25	
4	1		28	
5	0		29	
6	0	LMDA	23	LMDA

Smear Locations: 1 - Bottom 2 - Front 3 - Right Side 4 - Back 5 - Left Side 6 - Top

George Economos — Surveyor Name

George Economos — Surveyor Signature

MC

Supervisor Approval

24911-S-SHEET9215-99.9

Date: 01/26/05 Time:1640

1-27-05 11:25 Bag# 9215

13750 lb GR

012705 1125 9215 0013750

Shipment Survey

Survey Number: GTEOSI-05-00327 Date: 4-18-05 Time: 15:35

Waste Container Type: Super Sack Intermodal Other: Soil

Waste Container ID #: 9225 Storage Bin: — Gross Weight: 19,950 lbs

	Ludlum 3030		Ludlum 3030		Ludlum 3030		L-19
Serial #	190646		196165		N		193615
Probe #	N/A		N/A				N/A
Calibration Due Date:	12-13-05		7-18-05				29 Mar 06
	α	β	α	β	α	β	
Background	0 cpm	25 cpm	0 cpm	25 cpm	cpm	cpm	5 μR/hr
Efficiency	29 %	25 %	29 %	25 %	%	%	
MDA	25 dpm	130 dpm	25 dpm	130 dpm	dpm	A dpm	

Maximum Contact Dose Rate: 0.005 mrem/hr Transport Index: 0.0 mrem/hr

	α cpm	α dpm/100 cm2	β cpm	β dpm/100 cm2
ALARA Limit	N/A	60	N/A	500
Smear #				
1	0	LMDA	34	LMDA
2	0		35	
3	0		23	
4	0		22	
5	0		29	
6	1	LMDA	25	LMDA

Smear Locations: 1 - Bottom 2 - Front 3 - Right Side 4 - Back 5 - Left Side 6 - Top

George Economos
Surveyor Name

George Economos
Surveyor Signature

Supervisor Approval

28794-S-U07XX9225-99.9
Date: 03/25/05 Time: 1118

4-18-05 15:27 Bag# 9225
19950 lb GR
041805 1527 9225 0019950

Attachment 5.10
TRANSPORT VEHICLE RELEASE CHECKLIST

Shipment Number- 0840-01-986

Truck Number- 38 & 44

Trailer Number- 226 & 225

A qualified MHF-LS shipping technician shall verify that each item listed is satisfactory and then place a Check Mark in the corresponding box.

1. Driver possesses a valid driver's license with a HAZMAT endorsement ☑
2. Driver possesses a valid copy of a "Research and Special Programs Administration" U.S. DOT Hazmat Registration Certificate ☑
3. If manifested on a Hazardous Waste Manifest, ensure the carrier possesses a current EPA ID # ☑
4. Lamps are operable ☑
   - Headlights and Brights
   - Warning Lights and Flashers
   - Brake Lights
5. Coupling devices are intact ☑
6. Tires are sufficient ☑
   - No fabric is exposed through tread or sidewall
   - Front wheel tires must have tread pattern to a depth of ≥1/8 inch
   - Other tires must have tread pattern to a depth of ≥1/16 inch
   - Re-treaded tires are not authorized
7. Horn is operable ☑
8. Windshield wipers are operable ☑
9. Rear-vision mirrors are adequate (1 on each side) ☑
10. Emergency equipment is on-hand and accessible ☑
    - Fire extinguisher
    - Warning devices- bi-directional emergency reflectors, triangles (3), or liquid burning flares
11. General vehicle integrity is satisfactory ☑
    - Frame appears undamaged
    - Flooring is sufficient to support load
    - If a closed transport vehicle, vehicle is closed
    - Vehicle is otherwise in unimpaired physical condition
12. Vehicle truck and trailer have current DOT inspection stickers on both components (Good for 1 year from date performed) ☑
13. Vehicle is properly placarded (Exclusive Use LSA, Yellow III and HRCQ only) ☑
14. Shoring, strapping, blocking and bracing is adequate to prevent shifting of lading ☑

MHF-LS Qualified Technician Signature _____
Shipment Date 5-19-05

Attachment 5.9
LOADING DIAGRAM

A qualified MHF-LS shipper shall complete the following diagram by writing the package number and corresponding weight at the approximate position in which it is placed. The space to the left of the diagram may be used for additional or explanatory information as necessary.

Shipment Number 0840-01-986

Front

9196

16,670-lbs

9215

13,750-lbs

Rear

MHF-LS Qualified Technician
Signature _____
Shipment Date 5-19-05

Attachment 5.9
LOADING DIAGRAM

A qualified MHF-LS shipper shall complete the following diagram by writing the package number and corresponding weight at the approximate position in which it is placed. The space to the left of the diagram may be used for additional or explanatory information as necessary.

Shipment Number-0540-01986

Front

9189
17,490-lbs

9225
19,950-lbs

Rear

MHF-LS Qualified Technician
Signature [signature]
Shipment Date 5-19-05

Attachment 5.15
RAILCAR INSPECTION FORM

Shipment Number	Carrier	Railcar Number
0840.01-986	NYARR / MHF	MHFX-5227

Item	SAT	UNSAT	Criteria	Comments
Coupler	☒	☐	Hardware intact, no cracks or broken welds, latching mechanism works properly, no loose or damaged parts	
Suspension	☒	☐	Hardware intact, no visible cracks or broken welds, coil springs seated and intact, inner and outer bearings intact and seated properly	
Wheel & Axle Assembly	☒	☐	Overall condition, no cracks or damaged areas on wheel surfaces, hubs centered, bolting intact, rims not bent or cracked	
Frame & Undercarriage	☒	☐	Main beams straight and centered, no major bends or damage, welds intact, no cracks	
Floors & Walls (Gondola, Boxcar)	☒	☐	No damage with open holes, punch throughs, ect. No rust damage, seams and welds intact, no rotting or other material problems, structurally sound	
Attachment Points or Tie Downs	☒	☐	Tie down hardware straight and intact, no cracks on or around attachment hardware, mechanical clips or latches operable and complete	
Doors (Boxcar Only)	☒	☐	Can be closed and secured properly, lubricated properly, rollers and tracks in operable condition, no loose or missing hardware, sealing surfaces intact and seals in serviceable condition	
Seals and Gasket	☒	☐	Seal Flanges intact with no dents or bends that affect sealing capability, gaskets pliable and in serviceable condition, no torn or missing areas, gasket appropriate to meet sealing requirements	
Seams (Gondola, Boxcar)	☒	☐	Seams intact, welds visibly sufficient, all corners and mating interfaces caulked and sealed properly	
Drains	☒	☐	Drains plugged or sealed properly, verify threaded plugs are tack welded or otherwise disabled, all other holes closed and sealed	
Brakes	☒	☐	Visibly inspect brake shoes, minimum 1" contact surface on all shoes, hoses and piping (tubing) mechanically sound, no missing or loose hardware, valves operate freely, no kinks or obstructions in piping or hoses	
Paint and Lettering	☒	☐	Overall good condition of exterior surfaces, identification numbering legible and intact, areas for placards or labels intact and structurally sound (Wood or metal panels)	
Bracing	☒	☐	Bracing and shoring must be sufficient to prevent shifting of lading during conditions normally incident to transportation	

MHF-LS Qualified Technician Signature _____

Shipment Date 5-19-05

Straight Bill of Lading

Shipper MHF-LS For GTE Operations Support Incorporated
140 Contiague Rock Road
Hicksville, NY 11369

Date: 5/19/2005

Consigned to MHF-LS @ New York-Atlantic Rail Spur
Hicksville, NY 11369

Load in Gondola # MHFX 5227

Emergency Contact: CHEMTREC 800-424-9300

TR: TL:

Quantity	Description		Net Waste Weight
2	Soil, DOT Non-Regulated Waste, Containing		
	Radioactive Materials.		
	Package ID Number		**Pounds:**
	Liner	9189	17490
	Liner	9225	19950
			Total:
			37440
	Packages do not meet the DOT "radioactive material"		
	definition in 49 CFR 173.403.		
	Radionuclide: Ac-227,Th-227, Th232, Th230,Pa-231,Ra-223		
	Ra-226,Ra-228,Th-228,U-234,U-nat,		
	Total Activity: 3.8389 MBq		
	Physical Form: Solid		
	Chemical Form: Metal Oxide		

3.7595

GENERATOR CERTIFICATION: I hereby certify and declare that the contents of this consignment are fully and accurately described above by proper shipping name and are classified, packed, marked, and labeled, and are in all respects in proper condition for transport by highway according to applicable international and national government regulations

Printed/Typed Name	Signature		Date
Robert Miller for MHFLS at GTEOSI			5/19/2005
Transporter	Signature		Date
Priority Transport			5/19/2005

Straight Bill of Lading

Shipper MHF-LS For GTE Operations Support Incorporated
140 Contiague Rock Road
Hicksville, NY 11369

Date: 5/19/2005

Consigned to MHF-LS @ New York-Atlantic Rail Spur
Hicksville, NY 11369

Load in Gondola # MHFX 5227

Emergency Contact: CHEMTREC 800-424-9300

TR: TL:

Total All Trucks 67860

Quantity	Description		Net Waste Weight
2	Soil, DOT Non-Regulated Waste, Containing		
	Radioactive Materials.		
	Package ID Number		**Pounds:**
	Liner	9196	16670
	Liner	9215	13750
			Total:
			30420
	Packages do not meet the DOT "radioactive material"		
	definition in 49 CFR 173.403.		
	Radionuclide: Ac-227,Th-227, Th232, Th230,Pa-231,Ra-223		
	Ra-226,Ra-228,Th-228,U-234,U-nat,		3.8389
	Total Activity: 3.8389 MBq		
	Physical Form: Solid		
	Chemical Form: Metal Oxide		

GENERATOR CERTIFICATION: I hereby certify and declare that the contents of this consignment are fully and accurately described above by proper shipping name and are classified, packed, marked, and labeled, and are in all respects in proper condition for transport by highway according to applicable international and national government regulations.

Printed/Typed Name	Signature		Date
Robert Miller for MHFLS at GTEOSI			5/19/2005
Transporter	Signature		Date
Priority Transport			5/19/2005

MHFX	Shipment #					
	new	9196	9215	9189	9225	
	Storage Loc.	16670	13750	17490	19950	
5227	0840-01-986	200000				

container #
9196

shipping check sheet (For Form 540)

	Ac-227		corrected	activity mBq	activity mCi	activity Ci	SNM	source	
		3.551E-002	3.551E-002	9.8959E-03	2.6746E-04	2.6746E-07	grams	kg	
grams			pCi/g				3.7147E-09	3.7147E-12	
7531860		7.2000E+01							
	Pa-231			activity mBq	activity mCi	activity Ci	SNM	source	
16590		2.228E-001	2.228E-001	6.2090E-02	1.6781E-03	1.6781E-06	grams	kg	
grams							3.5704E-05	3.5704E-08	
7531860		4.7000E-02							
	Ra-223			activity mBq	activity mCi	activity Ci	SNM	source	
16590		1.171E-001	1.171E-001	3.2633E-02	8.8198E-04	8.8198E-07	grams	kg	
grams							1.7294E-11	1.7294E-14	
7531860		5.1000E+04							
	Ra-226			activity mBq	activity mCi	activity Ci	SNM	source	
16590		3.020E-001	2.1925E-01	6.1101E-02	1.6514E-03	1.6514E-06	grams	kg	1.37741
grams							1.6514E-06	1.6514E-09	
7531860		1.0000E+00							
	Ra228			activity mBq	activity mCi	activity Ci	SNM	source	
16590		4.446E-001	6.3064E-01	1.7575E-01	4.7499E-03	4.7499E-06	grams	kg	0.705
grams							1.7592E-08	1.7592E-11	
7531860		2.7000E+02							
	TH-227			activity mBq	activity mCi	activity Ci	SNM	source	
16590		3.551E-002	3.551E-002	9.8959E-03	2.6746E-04	2.6746E-07	grams	kg	
grams							8.6276E-12	8.6276E-15	
7531860		3.1000E+04							
	Th-228			activity mBq	activity mCi	activity Ci	SNM	source	
16590		4.027E-001	7.2728E-01	2.0268E-01	5.4777E-03	5.4777E-06	grams	kg	
grams							6.6802E-09	6.6802E-12	0.55371
7531860		8.2000E+02							
	Th-230			activity mBq	activity mCi	activity Ci	SNM	source	
16590		4.446E-001	3.2989E-01	9.1934E-02	2.4847E-03	2.4847E-06	grams	kg	
grams							1.1832E-04	1.1832E-07	1.34771
7531860		2.1000E-02							
	TH-232			activity mBq	activity mCi	activity Ci	SNM	source	
16590		4.446E-001	6.3064E-01	1.7575E-01	4.7499E-03	4.7499E-06	grams	kg	0.705
grams							4.3181E+01	4.3181E-02	
7531860		1.1000E-07							
	U-234			activity mBq	activity mCi	activity Ci	SNM	source	
16590		1.316E+000	1.1686E+00	3.2587E-01	8.8018E-03	8.8018E-06	grams	kg	1.12613
grams							1.4196E-03	1.4196E-06	
7531860		6.2000E-03							
	U-235			activity mBq	activity mCi	activity Ci	SNM	source	
16590		1.511E-001	1.9347E-01	5.3916E-02	1.4572E-03	1.4572E-06	grams	kg	0.781
grams							6.6236E-01	6.6236E-04	
7531860		2.2000E-06							
	U-238			activity mBq	activity mCi	activity Ci	SNM	source	
16590		1.316E+000	1.7760E+00	4.9493E-01	1.3376E-02	1.3376E-05	grams	kg	0.741
grams							3.9342E+01	3.9342E-02	
7531860		3.4000E-07							

Totals for all flag 1 data

			corrected	activity mBq	activity mCi	activity Ci	SNM	source	
16590		5.2325E+00	6.0512E+00	1.6962E+00	4.5844E-02	4.5844E-05	grams	kg	flag1 data
			pCi/g	541 will be < than the 540 (MDA not added)			6.6236E-01	8.2525E-02	
131.6666667				data for NORM					
	U-nat		corrected pCi/g	activity mBq	activity mCi	activity Ci		source	
		1.4671E+00	1.9694E+00	5.4884E-01	1.4834E-02	1.4834E-05		kg	
								2.0892E-02	
		7.1000E-07							

U-nat		corrected pCi/g	activity mBq	activity mCi	activity Ci		source	
	5.2325E+00	6.0512E+00	1.6962E+00	4.5844E-02	4.5844E-05		kg total	norm data
							6.4075E-02	

container #
9189

shipping check sheet (For Form 540)

	Ac-227		corrected	activity mBq	activity mCi	activity Ci	SNM	source	
		8.142E-002	8.142E-002	2.3812E-02	6.4356E-04	6.4356E-07	grams	kg	
grams			pCi/g				8.9383E-09	8.9383E-12	
7904140		7.2000E+01							
	Pa-231			activity mBq	activity mCi	activity Ci	SNM	source	
17410		3.433E-001	3.433E-001	1.0040E-01	2.7135E-03	2.7135E-06	grams	kg	
grams							5.7734E-05	5.7734E-08	
7904140		4.7000E-02							
	Ra-223			activity mBq	activity mCi	activity Ci	SNM	source	
17410		5.827E-002	5.827E-002	1.7041E-02	4.6057E-04	4.6057E-07	grams	kg	
grams							9.0309E-12	9.0309E-15	
7904140		5.1000E+04							
	Ra-226			activity mBq	activity mCi	activity Ci	SNM	source	
17410		1.846E-001	1.3402E-01	3.9194E-02	1.0593E-03	1.0593E-06	grams	kg	1.37741
grams							1.0593E-06	1.0593E-09	
7904140		1.0000E+00							
	Ra228			activity mBq	activity mCi	activity Ci	SNM	source	
17410		2.620E-001	3.7163E-01	1.0868E-01	2.9374E-03	2.9374E-06	grams	kg	0.705
grams							1.0879E-08	1.0879E-11	
7904140		2.7000E+02							
	TH-227			activity mBq	activity mCi	activity Ci	SNM	source	
17410		8.142E-002	8.142E-002	2.3812E-02	6.4356E-04	6.4356E-07	grams	kg	
grams							2.0760E-11	2.0760E-14	
7904140		3.1000E+04							
	Th-228			activity mBq	activity mCi	activity Ci	SNM	source	
17410		2.516E-001	4.5439E-01	1.3289E-01	3.5916E-03	3.5916E-06	grams	kg	
grams							4.3799E-09	4.3799E-12	0.55371
7904140		8.2000E+02							
	Th-230			activity mBq	activity mCi	activity Ci	SNM	source	
17410		2.620E-001	1.9440E-01	5.6854E-02	1.5366E-03	1.5366E-06	grams	kg	
grams							7.3171E-05	7.3171E-08	1.34771
7904140		2.1000E-02							
	TH-232			activity mBq	activity mCi	activity Ci	SNM	source	
17410		2.620E-001	3.7163E-01	1.0868E-01	2.9374E-03	2.9374E-06	grams	kg	0.705
grams							2.6704E+01	2.6704E-02	
7904140		1.1000E-07							
	U-234			activity mBq	activity mCi	activity Ci	SNM	source	
17410		5.877E-001	5.2188E-01	1.5262E-01	4.1250E-03	4.1250E-06	grams	kg	1.12613
grams							6.6532E-04	6.6532E-07	
7904140		6.2000E-03							
	U-235			activity mBq	activity mCi	activity Ci	SNM	source	
17410		1.518E-001	1.9437E-01	5.6843E-02	1.5363E-03	1.5363E-06	grams	kg	0.781
grams							6.9832E-01	6.9832E-04	
7904140		2.2000E-06							
	U-238			activity mBq	activity mCi	activity Ci	SNM	source	
17410		5.877E-001	7.9312E-01	2.3195E-01	6.2689E-03	6.2689E-06	grams	kg	0.741
grams							1.8438E+01	1.8438E-02	
7904140		3.4000E-07							

Totals for all flag 1 data

			corrected	activity mBq	activity mCi	activity Ci	SNM	source	
17410		3.1138E+00	3.5184E+00	1.0528E+00	2.8454E-02	2.8454E-05	grams	kg	flag1 data
			pCi/g	541 will be < than the 540 (MDA not added)			6.9832E-01	4.5143E-02	
138.1746032				data for NORM					
	U-nat		corrected pCi/g	activity mBq	activity mCi	activity Ci		source	
		7.3950E-01	9.8748E-01	2.8879E-01	7.8052E-03	7.8052E-06		kg	
								1.0993E-02	
		7.1000E-07							

U-nat		corrected pCi/g	activity mBq	activity mCi	activity Ci		source	
	3.1138E+00	3.5184E+00	1.0528E+00	2.8454E-02	2.8454E-05		kg total	norm data
							3.7698E-02	

X

container #
9215

shipping check sheet (For Form 540)

	Ac-227		corrected	activity mBq	activity mCi	activity Ci	SNM	source	
		4.048E-002	4.048E-002	9.2954E-03	2.5123E-04	2.5123E-07	grams	kg	
grams			pCi/g				3.4893E-09	3.4893E-12	
6206180		7.2000E+01							
	Pa-231			activity mBq	activity mCi	activity Ci	SNM	source	
13670		2.300E-001	2.300E-001	5.2815E-02	1.4274E-03	1.4274E-06	grams	kg	
grams							3.0371E-05	3.0371E-08	
6206180		4.7000E-02							
	Ra-223			activity mBq	activity mCi	activity Ci	SNM	source	
13670		8.656E-002	8.656E-002	1.9877E-02	5.3721E-04	5.3721E-07	grams	kg	
grams							1.0533E-11	1.0533E-14	
6206180		5.1000E+04							
	Ra-226			activity mBq	activity mCi	activity Ci	SNM	source	
13670		2.622E-001	1.9036E-01	4.3711E-02	1.1814E-03	1.1814E-06	grams	kg	1.37741
grams							1.1814E-06	1.1814E-09	
6206180		1.0000E+00							
	Ra228			activity mBq	activity mCi	activity Ci	SNM	source	
13670		3.641E-001	5.1645E-01	1.1859E-01	3.2052E-03	3.2052E-06	grams	kg	0.705
grams							1.1871E-08	1.1871E-11	
6206180		2.7000E+02							
	TH-227			activity mBq	activity mCi	activity Ci	SNM	source	
13670		4.048E-002	4.048E-002	9.2954E-03	2.5123E-04	2.5123E-07	grams	kg	
grams							8.1041E-12	8.1041E-15	
6206180		3.1000E+04							
	Th-228			activity mBq	activity mCi	activity Ci	SNM	source	
13670		3.225E-001	5.6243E-01	1.3374E-01	3.6147E-03	3.6147E-06	grams	kg	
grams							4.4082E-09	4.4082E-12	0.55371
6206180		8.2000E+02							
	Th-230			activity mBq	activity mCi	activity Ci	SNM	source	
13670		3.641E-001	2.7016E-01	6.2037E-02	1.6767E-03	1.6767E-06	grams	kg	
grams							7.9842E-05	7.9842E-08	1.34771
6206180		2.1000E-02							
	TH-232			activity mBq	activity mCi	activity Ci	SNM	source	
13670		3.641E-001	5.1645E-01	1.1859E-01	3.2052E-03	3.2052E-06	grams	kg	0.705
grams							2.9138E+01	2.9138E-02	
6206180		1.1000E-07							
	U-234			activity mBq	activity mCi	activity Ci	SNM	source	
13670		2.954E+000	2.6231E+00	6.0235E-01	1.6280E-02	1.6280E-05	grams	kg	1.12613
grams							2.6258E-03	2.6258E-06	
6206180		6.2000E-03							
	U-235			activity mBq	activity mCi	activity Ci	SNM	source	
13670		1.937E-001	2.4802E-01	5.6951E-02	1.5392E-03	1.5392E-06	grams	kg	0.781
grams							6.9965E-01	6.9965E-04	
6206180		2.2000E-06							
	U-238			activity mBq	activity mCi	activity Ci	SNM	source	
13670		2.954E+000	3.9865E+00	9.1542E-01	2.4741E-02	2.4741E-05	grams	kg	0.741
grams							7.2768E+01	7.2768E-02	
6206180		3.4000E-07							

Totals for all flag 1 data

			corrected	activity mBq	activity mCi	activity Ci	SNM	source	
13670		8.1762E+00	9.2906E+00	2.1427E+00	5.7910E-02	5.7910E-05	grams	kg	flag1 data
			pCi/g	541 will be < than the 540 (MDA not added)			6.9965E-01	1.0191E-01	
108.4920635				data for NORM					
	U-nat		corrected pCi/g	activity mBq	activity mCi	activity Ci		source	
		3.1477E+00	4.2345E+00	9.7237E-01	2.6280E-02	2.6280E-05		kg	
								3.7014E-02	
		7.1000E-07							

	U-nat		corrected pCi/g	activity mBq	activity mCi	activity Ci		source	
		8.1762E+00	9.2906E+00	2.1427E+00	5.7910E-02	5.7910E-05		kg total	norm data
								6.6155E-02	

X

container #
9225

shipping check sheet (For Form 540)

	Ac-227	[illegible]	corrected	activity mBq	activity mCi	activity Ci	SNM	source	
		4.875E-002	4.875E-002	1.6272E-02	4.3977E-04	4.3977E-07	grams	kg	
grams		[illegible]	pCi/g				6.1080E-09	6.1080E-12	
9020980		7.2000E+01							
	Pa-231	[illegible]		activity mBq	activity mCi	activity Ci	SNM	source	
19870		2.196E-001	2.196E-001	7.3297E-02	1.9810E-03	1.9810E-06	grams	kg	
grams		[illegible]					4.2149E-05	4.2149E-08	
9020980		4.7000E-02							
	Ra-223	[illegible]		activity mBq	activity mCi	activity Ci	SNM	source	
19870		4.111E-002	4.111E-002	1.3722E-02	3.7085E-04	3.7085E-07	grams	kg	
grams		[illegible]					7.2716E-12	7.2716E-15	
9020980		5.1000E+04							
	Ra-226	[illegible]		activity mBq	activity mCi	activity Ci	SNM	source	
19870		2.452E-001	1.7802E-01	5.9417E-02	1.6059E-03	1.6059E-06	grams	kg	1.37741
grams		[illegible]					1.6059E-06	1.6059E-09	
9020980		1.0000E+00							
	Ra228	[illegible]		activity mBq	activity mCi	activity Ci	SNM	source	
19870		2.978E-001	4.2241E-01	1.4099E-01	3.8106E-03	3.8106E-06	grams	kg	0.705
grams		[illegible]					1.4113E-08	1.4113E-11	
9020980		2.7000E+02							
	TH-227	[illegible]		activity mBq	activity mCi	activity Ci	SNM	source	
19870		4.875E-002	4.875E-002	1.6272E-02	4.3977E-04	4.3977E-07	grams	kg	
grams		spec activity					1.4186E-11	1.4186E-14	
9020980		3.1000E+04							
	Th-228	activity-pCi/g		activity mBq	activity mCi	activity Ci	SNM	source	
19870		2.593E-001	4.6830E-01	1.5631E-01	4.2245E-03	4.2245E-06	grams	kg	
grams		spec activity					5.1518E-09	5.1518E-12	0.55371
9020980		8.2000E+02							
	Th-230	activity-pCi/g		activity mBq	activity mCi	activity Ci	SNM	source	
19870		2.978E-001	2.2097E-01	7.3754E-02	1.9933E-03	1.9933E-06	grams	kg	
grams		spec activity					9.4921E-05	9.4921E-08	1.34771
9020980		2.1000E-02							
	TH-232	activity-pCi/g		activity mBq	activity mCi	activity Ci	SNM	source	
19870		2.978E-001	4.2241E-01	1.4099E-01	3.8106E-03	3.8106E-06	grams	kg	0.705
grams		spec activity					3.4641E+01	3.4641E-02	
9020980		1.1000E-07							
	U-234	activity-pCi/g		activity mBq	activity mCi	activity Ci	SNM	source	
19870		2.561E+000	2.2742E+00	7.5906E-01	2.0515E-02	2.0515E-05	grams	kg	1.12613
grams		spec activity					3.3089E-03	3.3089E-06	
9020980		6.2000E-03							
	U-235	activity-pCi/g		activity mBq	activity mCi	activity Ci	SNM	source	
19870		2.412E-001	3.0883E-01	1.0308E-01	2.7860E-03	2.7860E-06	grams	kg	0.781
grams		spec activity					1.2664E+00	1.2664E-03	
9020980		2.2000E-06							
	U-238	activity-pCi/g		activity mBq	activity mCi	activity Ci	SNM	source	
19870		2.561E+000	3.4561E+00	1.1536E+00	3.1178E-02	3.1178E-05	grams	kg	0.741
grams		spec activity					9.1699E+01	9.1699E-02	
9020980		3.4000E-07							

Totals for all flag 1 data

		activity-pCi/g	corrected	activity mBq	activity mCi	activity Ci	SNM	source	
19870		7.1193E+00	8.0607E+00	2.7067E+00	7.3155E-02	7.3155E-05	grams	kg	flag1 data
			pCi/g	541 will be < than the 540 (MDA not added)			1.2664E+00	1.2634E-01	
157.6984127				data for NORM					
	U-nat	activity-pCi/g	corrected pCi/g	activity mBq	activity mCi	activity Ci		source	
		2.8022E+00	3.7650E+00	1.2567E+00	3.3964E-02	3.3964E-05		kg	
		spec activity						4.7836E-02	
		7.1000E-07							

U-nat	activity-pCi/g	corrected pCi/g	activity mBq	activity mCi	activity Ci		source	
	7.1193E+00	8.0607E+00	2.7067E+00	7.3155E-02	7.3155E-05		kg total	norm data
							8.2481E-02	

0

Posillico Bros. Asphalt Co.

1610 New Highway, Farmingdale, N.Y. 11735
Plant Tele: 293-2620, 2621

HOT STORAGE

16:55 4-21-05 TICKET NUMBER 9189

17490 lb GROSS

Posillico Bros. Asphalt Co.

1610 New Highway, Farmingdale, N.Y. 11735
Plant Tele: 293-2620, 2621

HOT STORAGE

11:00 5-09-05 TICKET NUMBER 9196

16670 lb GROSS

Posillico Bros. Asphalt Co.

1610 New Highway, Farmingdale, N.Y. 11735
Plant Tele: 293-2620, 2621

HOT STORAGE

15:27 4-18-05 TICKET NUMBER 9225

19950 lb GROSS

FORM 540 — Envirocare of Utah, Inc.

UNIFORM LOW-LEVEL RADIOACTIVE WASTE MANIFEST

SHIPPING PAPER

1. EMERGENCY TELEPHONE NUMBER (Include Area Code): 1-800-424-9300

ORGANIZATION: Chemtrec

2. IS THIS AN "EXCLUSIVE USE" SHIPMENT? ☐ YES ☑ NO

3. TOTAL NUMBER OF PACKAGES IDENTIFIED ON THIS MANIFEST ==> 2

4. DOES EPA REGULATED WASTE REQUIRING A MANIFEST ACCOMPANY THIS SHIPMENT? ☐ YES ☑ NO
If "Yes," provide Manifest Number ==>

EPA MANIFEST NUMBER

5. SHIPPER – NAME AND FACILITY
GTEOSI
140 Cantiague Rock RD
Hicksville, NY 11801

Utah Generator Site Access Permit No.: 020 500 1352

SHIPMENT NUMBER: MHFX-5227

CONTACT: Jean Agostinelli

6. CARRIER – Name and Address
Priority Transport Services, Inc.
391 Anthony Street
Schenectady, NY 12308

CONTACT: Dispatch

SIGNATURE – Authorized carrier acknowledging waste receipt

SHIPPER I.D. NUMBER: 0640-04-029

☐ COLLECTOR
☐ PROCESSOR
☑ GENERATOR TYPE (Specify) I

TELEPHONE NUMBER (Include Area Code): 516-932-9157

EPA I.D. NUMBER: NYR000104976

SHIPPING DATE: 05/19/2005

TELEPHONE (Include Area Code): 800-235-0069

DATE: 5-19-05

7. FORM 540 AND 540A — PAGE 1 OF 1 PAGE(S)
FORM 541 AND 541A — 2 PAGE(S)
FORM 542 AND 542A — None PAGE(S)
ADDITIONAL INFORMATION — None PAGE(S)

8. MANIFEST NUMBER (Use this number on all continuation pages): 0640-04-029

9. CONSIGNEE - Name and Facility
Envirocare of Utah, Inc.
Clive Disposal Site (Bulk Waste Facility)
Interstate 80, Exit 49
Clive, UT 84029

L84918

CONTACT: Shipping and Receiving

TELEPHONE (Include Area Code): (435)884-0155

SIGNATURE – Authorized consignee acknowledging waste receipt

DATE: 6-3-05

10. CERTIFICATION

This is to certify that the herein-named materials are properly classified, described, packaged, marked, and labeled and are in proper condition for transportation according to the applicable regulations of the Department of Transportation. The also certifies that the materials are classified, packaged, marked, and labeled and are in proper condition for transportation and disposal as described in accordance with the requirements of 10 CFR Parts 20 and 61, or equivalent state regulations.

AUTHORIZED SIGNATURE | TITLE: Broker | DATE: 5-19-05

11. U.S. DEPARTMENT OF TRANSPORTATION DESCRIPTION (Including proper shipping name, hazard class, UN ID number, and any additional information)	12. DOT LABEL "RADIOACTIVE"	13. TRANSPORT INDEX	14. PHYSICAL AND CHEMICAL FORM	15. INDIVIDUAL RADIONUCLIDES	16. TOTAL PACKAGE ACTIVITY MBq	mCi	17. LSA/SCO CLASS	18. TOTAL WEIGHT OR VOLUME (Use appropriate units)	19. IDENTIFICATION NUMBER OF PACKAGE
Soil,DOT Non-Regulated, containing Radionuclides	NA	NA	Solid / OXIDES	Ac-227 Pa-231 Ra-223 Ra-226 Ra-228 Th-227 Th-228 Th-230 Th-232 U-234 U-235 U-238	8.4951E+00	2.2960E-01	NA	18810 LBS; 148.65 FT3	9152
Soil,DOT Non-Regulated, containing Radionuclides	NA	NA	Solid / OXIDES	Ac-227 Pa-231 Ra-223 Ra-226 Ra-228 Th-227 Th-228 Th-230 Th-232 U-234 U-235 U-238	3.9502E+00	1.0676E-01	NA	10150 LBS; 79.92 FT3	9176

FOR CONSIGNEE USE ONLY

- ___ Record Waste Description Inadequate
- ___ Contamination or Leakage Detected
- ___ Unexpected Exposure Rates Detected
- ___ Labels, Markings, etc. Inadequate
- ___ Container Integrity Inadequate
- ___ Other
- ✓ No Violations Detected on this Shipment

20. TERMS AND CONDITIONS

A. HAZARDOUS MATERIALS: Generator represents & warrants that Waste Material __ is (or) ✓ is not a hazardous waste as defined in 40 CFR 261. Where the material is a hazardous waste, this shipment is also accompanied by a seperate and completed hazardous waste manifest, along with the appropriate land-disposal restriction notice and/or certification as required by 40 CFR 268.1.

B. TITLE: Upon acceptance at the disposal site by Envirocare of Utah, Inc., and all appropriate regulatory authorities, title to the Waste Material which conforms to Generator's representations herein shall thereupon transfer from Generator and be vested in Envirocare of Utah, Inc.

C. WASTE MATERIAL: Generator represents and warrants that all data set forth in this (UNIFORM LOW-LEVEL RADIOACTIVE WASTE MANIFEST) are true and correct in all respects and in accordance with all applicable governmental laws, rules, regulations and Envirocare of Utah Inc.'s facility license.

D. INDEMNIFICATION: Generator agrees to indemnify Envirocare of Utah, Inc., its officers, employees and agents against all losses and liability whatsoever if such losses or liability results from the failure of the Waste Material to conform in all material respects to the data supplied on the (UNIFORM LOW-LEVEL RADIOACTIVE WASTE MANIFEST.) or if this shipment fails to meet the standards prescribed by the Department of Transportation or any governmental agency having jurisdiction over such matters.

FORM 540 (04-03)

FORM 540 — **Envirocare of Utah, Inc.**

UNIFORM LOW-LEVEL RADIOACTIVE WASTE MANIFEST

SHIPPING PAPER

1. EMERGENCY TELEPHONE NUMBER (Include Area Code): 1-800-424-9300

ORGANIZATION: Chemtrec

2. IS THIS AN "EXCLUSIVE USE" SHIPMENT? ☐ YES ☑ NO

3. TOTAL NUMBER OF PACKAGES IDENTIFIED ON THIS MANIFEST =====> 2

4. DOES EPA REGULATED WASTE REQUIRING A MANIFEST ACCOMPANY THIS SHIPMENT? ☐ YES ☑ NO
If "Yes," provide Manifest Number =====>

EPA MANIFEST NUMBER

5. SHIPPER -- NAME AND FACILITY
GTEOSI
140 Cantiague Rock RD
Hicksville, NY 11801

SHIPPER I.D. NUMBER: 0840-04-029
☐ COLLECTOR
☐ PROCESSOR

Utah Generator Site Access Permit No.: 020 500 1352
SHIPMENT NUMBER: MHFX-5227
☑ GENERATOR TYPE (Specify) I

CONTACT: Jean Agostinelli
TELEPHONE NUMBER (Include Area Code): 516-932-9157

6. CARRIER -- Name and Address
Priority Transport Services, Inc.
391 Anthony Street
Schenectady, NY 12308

EPA I.D. NUMBER: NYR000104976
SHIPPING DATE: 05/19/2005

CONTACT: Dispatch
TELEPHONE (Include Area Code): 800-235-0069

SIGNATURE -- Authorized carrier acknowledging waste receipt
DATE: 5-19-05

7. FORM 540 AND 540A — PAGE 1 OF 1 PAGE(S)
FORM 541 AND 541A — 2 PAGE(S)
FORM 542 AND 542A — None PAGE(S)
ADDITIONAL INFORMATION — None PAGE(S)

8. MANIFEST NUMBER (Use this number on all continuation pages): 0840-04-029

9. CONSIGNEE - Name and Facility
Envirocare of Utah, Inc.
Clive Disposal Site (Bulk Waste Facility)
Interstate 80, Exit 49
Clive, UT 84029

CONTACT: Shipping and Receiving
TELEPHONE (Include Area Code): (435)884-0155

SIGNATURE -- Authorized consignee acknowledging waste receipt
DATE

10. CERTIFICATION
This is to certify that the herein-named materials are properly classified, described, packaged, marked, and labeled and are in proper condition for transportation according to the applicable regulations of the Department of Transportation. This also certifies that the materials are classified, packaged, marked, and labeled and are in proper condition for transportation and disposal as described in accordance with the requirements of 10 CFR Parts 20 and 61, or equivalent state regulations.

AUTHORIZED SIGNATURE: [signature] — TITLE: Broker — DATE: 5-19-05

11. U.S. DEPARTMENT OF TRANSPORTATION DESCRIPTION (Including proper shipping name, hazard class, UN ID number, and any additional information)	12. DOT LABEL "RADIOACTIVE"	13. TRANSPORT INDEX	14. PHYSICAL AND CHEMICAL FORM	15. INDIVIDUAL RADIONUCLIDES	16. TOTAL PACKAGE ACTIVITY MBq	16. TOTAL PACKAGE ACTIVITY mCi	17. LSA/SCO CLASS	18. TOTAL WEIGHT OR VOLUME (Use appropriate units)	19. IDENTIFICATION NUMBER OF PACKAGE
Soil,DOT Non-Regulated, containing Radionuclides	NA	NA	Solid / OXIDES	Ac-227 Pa-231 Ra-223 Ra-226 Ra-228 Th-227 Th-228 Th-230	8.4951E+00	2.2960E-01	NA	18810 LBS; 148.65 FT3	9152
				Th-232 U-234 U-235 U-238					
Soil,DOT Non-Regulated, containing Radionuclides	NA	NA	Solid / OXIDES	Ac-227 Pa-231 Ra-223 Ra-226 Ra-228 Th-227 Th-228 Th-230	3.9502E+00	1.0676E-01	NA	10150 LBS; 79.92 FT3	9176
				Th-232 U-234 U-235 U-238					

FOR CONSIGNEE USE ONLY

____ Record Waste Description Inadequate
____ Contamination or Leakage Detected
____ Unexpected Exposure Rates Detected
____ Labels, Markings, etc. Inadequate
____ Container Integrity Inadequate
____ Other
____ No Violations Detected on this Shipment

20. TERMS AND CONDITIONS

A. HAZARDOUS MATERIALS: Generator represents & warrants that Waste Material __ is (or) ✓ is not a hazardous waste as defined in 40 CFR 261. Where the material is a hazardous waste, this shipment is also accompanied by a separate and completed hazardous waste manifest, along with the appropriate land-disposal restriction notice and/or certification as required by 40 CFR 268.1.

B. TITLE: Upon acceptance at the disposal site by Envirocare of Utah, Inc., and all appropriate regulatory authorities, title to the Waste Material which conforms to Generator's representations herein shall thereupon transfer from Generator and be vested in Envirocare of Utah, Inc.

C. WASTE MATERIAL: Generator represents and warrants that all data set forth in this (UNIFORM LOW-LEVEL RADIOACTIVE WASTE MANIFEST) are true and correct in all respects and in accordance with all applicable governmental laws, rules, regulations and Envirocare of Utah Inc.'s facility license.

D. INDEMNIFICATION: Generator agrees to indemnify Envirocare of Utah, Inc., its officers, employees and agents against all losses and liability whatsoever if such losses or liability results from the failure of the Waste Material to conform in all material respects to the data supplied on the (UNIFORM LOW-LEVEL RADIOACTIVE WASTE MANIFEST,) or if this shipment fails to meet the standards prescribed by the Department of Transportation or any governmental agency having jurisdiction over such matters.

FORM 541

Envirocare of Utah, Inc.

UNIFORM LOW-LEVEL RADIOACTIVE WASTE MANIFEST

CONTAINER AND WASTE DESCRIPTION

Additional Nuclear Regulatory Commission (NRC) Requirements for Control, Transfer and Disposal of Radioactive Waste

1. MANIFEST TOTALS

NUMBER OF PACKAGES/ DISPOSAL CONTAINERS	NET WASTE VOLUME	NET WASTE WEIGHT	SPECIAL NUCLEAR MATERIAL (grams) U-233	U-235	Pu	Total
2	m3 6.4724 ft3 228.5700	kg 13063.4612 ton 14.4000	NP	7.5108E+00 2 Containers	NP	7.5108E+00

ACTIVITY	ALL NUCLIDES	TRITIUM	C-14	Tc-99	I-129	SOURCE (kg)	
MBq	1.2332E+01	NP	NP	NP	NP	(kg)	5.9215E-01
mCi	3.3329E-01	NP	NP	NP	NP	(tons)	6.5273E-04

2. MANIFEST NUMBER 0840-04-029

3. PAGE 1 OF 2 PAGE(S)

4. SHIPPER NAME GTEOSI

SHIPMENT ID NUMBER 0840-04-029

5. CONTAINER IDENTIFICATION NUMBER/ GENERATOR ID NUMBER(S)	6. CONTAINER DESCRIPTION (See Note 1 & Note 1A)	7. VOLUME (m3) / (ft3)	8. WASTE AND CONTAINER WEIGHT (kg) / (ton)	9. SURFACE RADIATION LEVEL (mSv/hr) / (mrem/hr)	10. SURFACE CONTAMINATION (MBq/100 cm2) / (dpm/100cm2) ALPHA	BETA-GAMMA	11. WASTE DESCRIPTOR (See Note 2 & Note 2A)	12. APPROXIMATE WASTE VOLUME(S) IN CONTAINER (m3) / (FT3)	13. SOLIDIFICATION OR STABILIZATION MEDIA (See Note 3)	14. CHEMICAL DESCRIPTION: CHEMICAL FORM/ CHELATING AGENT	WEIGHT % CHELATING AGENT IF > 0.1%	15. RADIOLOGICAL DESCRIPTION: INDIVIDUAL RADIONUCLIDES AND ACTIVITY (MBq) AND CONTAINER TOTAL; OR CONTAINER TOTAL ACTIVITY AND RADIONUCLIDE PERCENT: RADIONUCLIDES	pCi/gm	MBq	mCi	16. WASTE CLASSIFICATION AS-Class A Stable AU-Class A Unstable B-Class B C-Class C
9152/GTEOSI	19 Strong Tight Container Loaded in Gondola	4.2093	8532.0730	0.0001	<3.6740E-06	<3.6740E-05	22,59-CONCRETE,59 -MISC DEBRIS-HJ	4.2093	100	OXIDES/NONE	0.00	Ac-227	3.46200E-02	(1.0892E-02)	(2.9439E-04)	AU
		148.6500	9.4050	0.0090	<2.2000E+02	<2.2000E+03		148.6500				Pa-231	1.64100E-01	(5.1630E-02)	(1.3954E-03)	
												Ra-223	3.99100E-02	(1.2557E-02)	(3.3937E-04)	
												Ra-226	1.41643E-01	4.4567E-02	1.2045E-03	
												Ra-228	1.29801E+00	4.0841E-01	1.1038E-02	
												Th-227 [9.4964E-15 kg]	3.46200E-02	(1.0892E-02)	(2.9439E-04)	
												Th-228 [1.7794E-11 kg]	1.71588E+00	5.3987E-01	1.4591E-02	
												Th-230 [2.7495E-07 kg]	6.79004E-01	2.1363E-01	5.7739E-03	
												Th-232 [1.0034E-01 kg]	1.29801E+00	4.0841E-01	1.1038E-02	
												U-234 [1.1005E-05 kg]	8.02394E+00	2.5245E+00	6.8231E-02	
												U-235 [5.3202E+00 g]	1.37644E+00	4.3309E-01	1.1705E-02	
												U-238 [3.0498E-01 kg]	1.21943E+01	3.8365E+00	1.0369E-01	
												Subtotal		8.4090E+00	2.2727E-01	
												Total		8.4090E+00	2.2727E-01	
												SNM [5.3202E+00 g]				
												Source [4.0533E-01 kg]				
9176/GTEOSI	19 Strong Tight Container Loaded in Gondola	2.2631	4603.9629	0.0001	<3.6740E-06	<3.6740E-05	22,59-CONCRETE,59 -MISC DEBRIS-HJ	2.2631	100	OXIDES/NONE	0.00	Ac-227	2.63500E-02	(4.4574E-03)	(1.2047E-04)	AU
		79.9200	5.0750	0.0060	<2.2000E+02	<2.2000E+03		79.9200				Pa-231	1.09700E-01	(1.8556E-02)	(5.0152E-04)	
												Ra-223	5.76400E-02	9.7502E-03	2.6352E-04	
												Ra-226	2.52430E-01	4.2702E-02	1.1541E-03	
												Ra-228	8.73901E-01	1.4783E-01	3.9953E-03	
												Th-227 [3.8860E-15 kg]	2.63500E-02	(4.4574E-03)	(1.2047E-04)	
												Th-228 [5.9367E-12 kg]	1.06482E+00	1.8012E-01	4.8681E-03	
												Th-230 [9.9522E-08 kg]	4.57146E-01	7.7330E-02	2.0900E-03	
												Th-232 [3.6321E-02 kg]	8.73901E-01	1.4783E-01	3.9953E-03	

Note 1: Container Description Codes. For containers/ waste requiring disposal in approved structural over-packs the numerical code must be followed by "-OP."

1. Wooden Box or Crate
2. Metal Box
3. Plastic Drum or Pail
4. Metal Drum or Pail
5. Metal Tank or Liner
6. Concrete Tank or Liner
7. Polyethlene Tank or Liner
8. Fiberglass Tank or Liner
9. Demineralizer
10. Gas Cylinder
11. Bulk, Unpackaged Waste
12. Unpackaged Components
13. High Integrity Container
19. Other. Describe in Item 6, or additional page

Note 1A: Bulk Packaging Description Codes. (Choose one code as may be applicable.)

A Gondola
B Intermodal
C End-Dump
D Roll-off
E Seavan

NOTE 2: Waste Descriptor Codes. (Choose up to three which predominate by volume.)

20. Charcoal
21. Incinerator Ash
22. Soil
23. Gas
24. Oil
25. Aqueous Liquid
26. Filter Media
27. Mechanical Filter
28. EPA or State Hazardous
29. Demolition Rubble
30. Cation Ion-exchange Media
31. Anion Ion-exchange Media
32. Mixed Bed Ion-exchange Media
33. Contaminated Equipment
34. Organic Liquid (except oil)
35. Glassware or Labware
36. Sealed Source/Device
37. Paint or Plating
38. Evaporator Bottoms/Sludges/ Concentrates
39. Compactible Trash
40. Noncompactible Trash
41. Animal Carcass
42. Biological Material (except animal carcass)
43. Activated Material
59. Other. Describe in item 11, or additional page

NOTE 2A: Specific Waste Descriptions (Choose all applicable codes.)

G Dewatered
H Solid
I Combustible
J Non-combustible
K Air Filtration Filters
L Asbestos

Note3: Solidification and Stabilization Media Codes. (Choose up to three which predominate by volume.) For media meeting disposal site structural stability requirements, the numerical code must be followed by "-S." and the media vendor and brand name must also be identified

In Item 13. Code 100=NONE REQUIRED.

Solidification

90. Cement
91. Concrete (encapsulation)
92. Bitumen
93. Vinyl Chloride
94. Vinyl Ester Styrene
99. Other. Describe in item 13, or additional page
100. None Required.

FORM 541A

UNIFORM LOW-LEVEL RADIOACTIVE WASTE MANIFEST

CONTAINER AND WASTE DESCRIPTION (CONTINUATION)

Envirocare of Utah, Inc.

2. MANIFEST NUMBER 0840-04-029

3. PAGE 2 OF 2 PAGE(S)

DISPOSAL CONTAINER DESCRIPTION							WASTE DESCRIPTION FOR EACH WASTE TYPE IN CONTAINER									
							PHYSICAL DESCRIPTION			14. CHEMICAL DESCRIPTION		15. RADIOLOGICAL DESCRIPTION				16. WASTE CLASSIFICATION AS-Class A Stable AU-Class A Unstable B-Class B C-Class C
5. CONTAINER IDENTIFICATION NUMBER/ GENERATOR ID NUMBER(S)	6. CONTAINER DESCRIPTION (See Note 1 & Note 1A)	7. VOLUME (m3)/(ft3)	8. WASTE AND CONTAINER WEIGHT (kg)/(ton)	9. SURFACE RADIATION LEVEL (mSv/hr)/(mrem/hr)	10. SURFACE CONTAMINATION (MBq/100 cm2)/(dpm/100cm2)		11. WASTE DESCRIPTOR (See Note 2 & Note 2A)	12. APPROXIMATE WASTE VOLUME(S) IN CONTAINER (m3)/(FT3)	13. SOLIDIFICATION OR STABILIZATION MEDIA (See Note 3)	CHEMICAL FORM/ CHELATING AGENT	WEIGHT % CHELATING AGENT IF > 0.1%	INDIVIDUAL RADIONUCLIDES AND ACTIVITY (MBq) AND CONTAINER TOTAL; OR CONTAINER TOTAL ACTIVITY AND RADIONUCLIDE PERCENT				
					ALPHA	BETA-GAMMA						RADIONUCLIDES	pCi/gm	MBq	mCi	
												U-234 [5.4302E-06 kg]	7.36416E+00	1.2457E+00	3.3667E-02	
												U-235 [2.1906E+00 g]	1.05416E+00	1.7832E-01	4.8194E-03	
												U-238 [1.5049E-01 kg]	1.11916E+01	1.8931E+00	5.1166E-02	
												Subtotal		3.9227E+00	1.0602E-01	
												Total		3.9227E+00	1.0602E-01	
												SNM [2.1906E+00 g]				
												Source [1.8681E-01 kg]				
Shipment Totals		6.4724	13136.0359									SNM [7.5108E+00 g]		1.2332E+01	3.3329E-01	
		228.5700	14.4800									Source [5.9215E-01 kg]				

FORM 541A (04-03)

Envirocare of Utah, Inc.

ADDITIONAL NOTES

Manifest Number
0840-04-029
PAGE 1

New York State Waste Transporter Part 364 permit No. 4A-288
New York State Waste Transporter Part 381 permit Number 4A-288

UNIFORM LOW-LEVEL RADIOACTIVE WASTE MANIFEST
ISOTOPES REPORT

For Manifest # 0840-04-029
Envirocare of Utah, Inc.

	Total Activity		
Isotope	(MBq)	(mCi)	(Ci)
Ac-227	1.5350E-02	4.1485E-04	4.1485E-07
Pa-231	7.0187E-02	1.8969E-03	1.8969E-06
Ra-223	2.2307E-02	6.0289E-04	6.0289E-07
Ra-226	8.7265E-02	2.3585E-03	2.3585E-06
Ra-228	5.5622E-01	1.5033E-02	1.5033E-05
Th-227	1.5350E-02	4.1485E-04	4.1485E-07
Th-228	7.1998E-01	1.9459E-02	1.9459E-05
Th-230	2.9096E-01	7.8638E-03	7.8638E-06
Th-232	5.5622E-01	1.5033E-02	1.5033E-05
U-234	3.7702E+00	1.0190E-01	1.0190E-04
U-235	6.1138E-01	1.6524E-02	1.6524E-05
U-238	5.7298E+00	1.5486E-01	1.5486E-04

ENVIROCARE OF UTAH, LLC.

THE SAFE ALTERNATIVE

CERTIFICATE OF DISPOSAL

GTE Operations Support Inc., Irving

This Certificate acknowledges that the following manifested shipments:

Shipment	Disposal Location	Date	Shipment	Disposal Location	Date
0840-01-0977	Class A	06/10/05 11:58:51	0840-01-0981	Class A	06/10/05 11:34:19
0840-01-0982	Class A	06/10/05 11:58:51	0840-01-0983	Class A	06/10/05 11:34:19
0840-01-0984	Class A	06/10/05 10:04:57	0840-01-0985	Class A	06/10/05 10:04:57
0840-01-0986	Class A	06/10/05 11:34:19	0840-04-0029	Class A	06/10/05 11:58:51

Representing 9,190.86 cubic feet of waste has been disposed of at the above listed Disposal Facility. Disposal is subject to Envirocare's Radioactive Material License, all other applicable licenses, permits and regulations, and the Disposal Agreement.

Brent Anderson
Director of LLRW Operations

6/14/05
Date

605 N. 5600 W, Salt Lake City, Utah 84116 Telephone (801) 532-1330

DOE/NRC FORM 741
(5-2002) Previous editions are obsolete
MANDATORY DATA COLLECTION
AUTHORIZED BY 10 CFR 30, 40, 50, 70, 72, 74, 75, 150,
Public Laws 83-703, 93-438, 95-91

U.S. DEPARTMENT OF ENERGY
AND
U.S. NUCLEAR REGULATORY COMMISSION

NUCLEAR MATERIAL TRANSACTION REPORT

APPROVED BY OMB: NO. 3150-0003 EXPIRES: 05/31/2005

Estimated burden per response to comply with this mandatory collection request: 45 minutes. This information is required for IAEA accounting reports that show changes in inventory of nuclear materials. Send comments regarding burden estimate to the Records Management Branch (T-6 E6), U.S. Nuclear Regulatory Commission, Washington, DC 20555-0001, or by internet e-mail to infocollects@nrc.gov, and to the Desk Officer, Office of Information and Regulatory Affairs, NEOB-10202, (3150-0003), Office of Management and Budget, Washington, DC 20503. If a means used to impose an information collection does not display a currently valid OMB control number, the NRC may not conduct or sponsor, and a person is not required to respond to, the information collection.

1. SHIPPER'S RIS	2. RECEIVER'S RIS	3. TRANSACTION NO	4. CORRECTION NO	5. PROCESSING CODE		6. ACTION CODE		7. DOCUMENTATION (Only if document is classified SECRET)		
XYO	VDM	1		a. SHIPPER A	b. RECEIVER	a. SHIPPER A	b. RECEIVER	PAGE OF PAGES	COPY OF COPIES	SERIES

8a. NAME AND ADDRESS OF SHIPPER — b. LICENSE NO. 3095-4330

GTEOSI
140 Cantiague Rock RD
Hicksville, NY 11801

c. ATTENTION Rob Miller
d. TELEPHONE (516) 932-9157

9a. NAME AND ADDRESS OF RECEIVER — b. LICENSE NO. UT2300249

Envirocare of Utah
US-I-80-Exit 49
Tooele County
Wendover, UT 84083

c. ATTENTION Recieving
d. TELEPHONE (435) 884-0155

10. NO OF DATA LINES 1

11. NATURE OF TRANSACTION WASTE

12a. SHIPPED FOR ACCOUNT OF — b. RIS XYO
Same as 8

13a. SHIPPED TO ACCOUNT OF — b. RIS VDM
Same as 9

NO	DISTRIBUTION OF COPIES
1	
2	
3	
4	
5	
6	
7	
8	
9	

14. TRANSFER AUTHORITY - CONTRACT, NM DRAFT, OR ORDER NUMBER

15. EXPORT OR IMPORT TRANSFERS LICENSE NO.

16. MATERIAL TYPE AND DESCRIPTION
Waste Soil and Debris, MHFX-5227

17. LINE NUMBER	18. COUNTRY OF OBLIGATION	19. MATERIAL TYPE	20. OBLIGATED ELEMENT WEIGHT	21. OBLIGATED ISOTOPE WEIGHT For Enriched Uranium Only
01		20		8g

22. ACTION DATE	MONTH (MM)	DAY (DD)	YEAR (YYYY)
a. SHIPMENT	5	19	05
b. SHIPPER'S CORRECTION			
c. RECEIPT			
d. RECEIVER'S MEASUREMENT			
e. RECEIVER'S CORRECTION			

23a. MISCELLANEOUS
0840-04-029

b. CONCISE NOTE ATTACHED ☐
c. UK REPORTABLE? ☑ YES ☐ NO

24. TOTAL GROSS WEIGHT 28,960 lbs

25. TOTAL VOLUME (Waste Transfers Only) 229 cuft.

26. SHIPPER'S DATA

BACK REFERENCE NUMBER a	LINE NO. b	TYPE OF INV. CHANGE c.	IDENTIFICATION (ITEM/BATCH NAME) d	NO. OF ITEMS e	PROJECT NUMBER f	MATERIAL TYPE g	COMP/ FACILITY CODE h	OWNER CODE i	KEY MEAS POINT j	MEAS IDENT. k 1 BASIS	2 OMP	3 METHOD	GROSS WEIGHT l	NET WEIGHT m	ELEMENT WEIGHT n	ELEMENT LIMIT OF ERROR o	WEIGHT % ISOTOPE p	ISOTOPE WEIGHT q	ISOTOPE LIMIT OF ERROR r
	01		0840-04-029	1		20	E04	J	E04						600g		1.3	8g	

26s. SHIPPER'S DATA — SIGNATURE OF AUTHORIZED OFFICIAL AND DATE SIGNED 5-19-05

27s. RECEIVER'S DATA — SIGNATURE OF AUTHORIZED OFFICIAL AND DATE SIGNED

27. RECEIVER'S DATA

BACK REFERENCE NUMBER a	LINE NO. b	TYPE OF INV. CHANGE c.	IDENTIFICATION (ITEM/BATCH NAME) d	NO. OF ITEMS e	PROJECT NUMBER f	MATERIAL TYPE g	COMP/ FACILITY CODE h	OWNER CODE i	KEY MEAS POINT j	MEAS IDENT. k 1 BASIS	2 OMP	3 METHOD	GROSS WEIGHT l	NET WEIGHT m	ELEMENT WEIGHT n	ELEMENT LIMIT OF ERROR o	WEIGHT % ISOTOPE p	ISOTOPE WEIGHT q	ISOTOPE LIMIT OF ERROR r

WARNING: FALSE STATEMENTS IN THIS CERTIFICATE MAY BE SUBJECT TO CIVIL AND/OR CRIMINAL PENALTIES. NRC REGULATIONS REQUIRE THAT SUBMISSIONS TO THE NRC BE COMPLETE AND ACCURATE IN ALL MATERIAL RESPECTS. 18 U.S.C. SECTION 1001 MAKES IT A CRIMINAL OFFENSE TO MAKE A WILLFULLY FALSE STATEMENT OR REPRESENTATION TO ANY DEPARTMENT OR AGENCY OF THE UNITED STATES AS TO ANY MATTER WITHIN ITS JURISDICTION.

ENVIROCARE OF UTAH, LLC
SAFE AND SECURE

Special Nuclear Material Exemption Certification
EC-0230-SNM, Revision 2

The Special Nuclear Material Exemption Certification form must be completed and signed by each generator certifying to the following conditions. Please attach this form and all required information to the Radioactive Waste Profile Record (EC-0230). **A completed and signed copy of this form must also accompany each waste manifest.**

Waste Stream ID: 0840-04 Manifest No. 029

1. Check applicable category below for the waste stream:

√	Uranium Enrichment Percent	Weight Percent of Chemicals in Condition 2c	Weight Percent of Materials in Condition 2d	U-235 Concentration (pCi/g)	Measurement Uncertainty* (pCi/g)
☐	< 10 %	≤ 20 %	≤ 1 %	≤ 1,900	≤ 285
☒	Unlimited	≤ 20 %	≤ 1 %	≤ 1,190	≤ 179
☐	Unlimited	Sum of both ≤ 45 % of waste by weight		≤ 680	≤ 102
☐	Unlimited	Unlimited	Unlimited	≤ 26	≤ 10
☐	Not Applicable - Enriched U-235 is not present in the waste.				

* A concentration value is used for the maximum measurement uncertainty limit rather than a percentage value to allow greater flexibility for generators with waste having very low SNM concentrations.

2. Certify to the following requirements by checking each box:

☒ a. Concentrations of SNM in individual waste containers do not exceed the applicable values listed in the above table and SNM isotope concentrations listed in Table 1.

☒ b. The SNM is homogeneously distributed throughout the waste <u>or</u> the SNM concentrations in any contiguous mass of 600 kilograms (1,323 lbs) do not exceed on average the specified limits. (Based on process knowledge or testing).

☒ c. Except as allowed by Condition 1, the waste does not contain "pure forms" of chemicals containing carbon, fluorine, magnesium, or bismuth in bulk quantities (e.g., a pallet of drums, a B-25 box). By "pure forms," it is meant that mixtures of the above elements such as magnesium oxide, magnesium carbonate, magnesium fluoride, bismuth oxide, etc. do not contain other elements. (Based on process knowledge or testing).

☒ d. Except as allowed by Condition 1, the waste does not contain total quantities of beryllium, hydrogenous material enriched in deuterium, or graphite above one percent of the total weight of the waste. (Based on process knowledge, physical observations, or testing).

☒ e. Waste packages do not contain highly soluble forms of uranium greater than 350 grams of uranium-235 or 200 grams of uranium-233. If the waste contains mixtures of U-233 and U-235, the waste meets the sum of the fractions rule. Highly soluble forms of uranium include, but are not limited to: uranium sulfate, uranyl acetate, uranyl chloride, uranyl formate, uranyl fluoride, uranyl nitrate, uranyl potassium carbonate, and uranyl sulfate. (Based on process knowledge or testing).

☐ f. For containers of <u>liquid waste</u> with more than 600 kilograms of waste, the total activity (pCi) of SNM in the manifested container does not exceed the SNM concentration in the above table or Table 1 times 600 kilograms of waste (based on process knowledge or testing). For example, the maximum activity of Pu-239 in any manifested container of liquid waste is 6.0 mCi (6.0E+09 pCi) as shown below:

$$10{,}000\,\frac{\text{pCi}}{\text{g}} \times 600{,}000\,g = 6.0\text{X}10^{9}\ \text{pCi} = 6.0\ \text{mCi Pu-239}$$

Table 1. Maximum concentrations of SNM in individual waste containers (refer to above table for U-235 limits).

Radionuclide	Maximum Concentration (pCi/g)	Measurement Uncertainty (pCi/g)	Radionuclide	Maximum Concentration (pCi/g)	Measurement Uncertainty (pCi/g)
U-233	75,000	11,250	Pu-241	350,000	50,000
Pu-236	500	75	Pu-242	10,000	1,500
Pu-238	10,000	1,500	Pu-243	500	75
Pu-239	10,000	1,500	Pu-244	500	75
Pu-240	10,000	1,500			

3. **Indicate that the following information is attached to the Radioactive Waste Profile Record by checking each box. (Note: Only the two-page Special Nuclear Material Exemption Certification form needs to be included with each manifest).**

   ☒ a. Provide a description of how the waste was generated, list the physical forms in the waste, and identify the uranium chemical composition.

   ☒ b. Provide a general description of how the waste was characterized (including the volumetric extent of the waste, and the number, location, type, and results of any analytical testing), the range of SNM concentrations, and the analytical results with error values used to develop the concentration ranges.

   ☒ c. Describe the process by which the waste was generated showing that the spatial distribution of SNM must be uniform, or other information supporting spatial distribution.

   ☒ d. Describe the methods to be used to determine the concentrations on the manifests. These methods could include direct measurement and the use of scaling factors. Describe the uncertainty associated with sampling and testing used to obtain the manifest concentrations.

4. **Generator's certification of compliance with the SNM exemption:** I certify that the information provided on this form is complete, true, and correct and is based on process knowledge, physical observations, or approved laboratory testing. I also certify that sampling and radiological testing of waste containing SNM was performed in accordance with Envirocare's Radioactive Material License and that any supporting documentation and analytical results have been submitted to Envirocare of Utah, Inc.

Authorized Signature	Printed Name	Title	Date
[signature]	Robert Miller	Broker	5-19-05

Shipment Survey

Survey Number: GTEOSI-04-7591 Date: 11-30-04 Time: 0827

Waste Container Type: Super Sack Intermodal Other: Soil

Waste Container ID #: 9152 Storage Bin: 41 Gross Weight: 18810 lbs

	Ludlum 3030		Ludlum 3030		Ludlum 3030		L-19
Serial #	190641		191265				193595
Probe #	N/A		N/A		N/A		N/A
Calibration Due Date:	3-4-05		4-20-05				5-08-05
	α	β	α	β	α	β	
Background	0 cpm	25 cpm	0 cpm	25 cpm	cpm	cpm	6 µR/hr
Efficiency	29 %	25 %	29 %	25 %	N/A %	N/A %	
MDA	25 dpm	130 dpm	25 dpm	130 dpm	dpm	dpm	

Maximum Contact Dose Rate: .009 mrem/hr Transport Index: 0 mrem/hr

	α cpm	α dpm/100 cm2	β cpm	β dpm/100 cm2
ALARA Limit	N/A	60	N/A	500
Smear #				
1	0	<MDA	33	<MDA
2	1		28	
3	0		30	
4	0		29	
5	0		30	
6	0		31	

Smear Locations: 1 - Bottom 2 - Front 3 - Right Side 4 - Back 5 - Left Side 6 - Top

DEBRA LePage — Debra LePage
Surveyor Name — Surveyor Signature

George Economos
Supervisor Approval

19702-S-LPH219152-99.9
Date: 10/26/04 Time:1146

11-30-04 8:27 Bag# 9152
18810 lb GR
113004 0827 9152 0018810

Shipment Survey

Survey Number: GTEOSI-05-00323 Date: 4-18-05 Time: 16:15

Waste Container Type: Super Sack Intermodal Other: Soil

Waste Container ID #: 9176 Storage Bin: — Gross Weight: 10,150 lbs

	Ludlum 3030		Ludlum 3030		Ludlum 3030		L-19
Serial #	190646		196165		N		193615
Probe #	N/A		N/A				N/A
Calibration Due Date:	12-13-05		7-18-05				29 MAR 06
	α	β	α	β	α	β	
Background	0 cpm	25 cpm	0 cpm	25 cpm	cpm	cpm	5 μR/hr
Efficiency	29 %	25 %	29 %	25 %	%	%	
MDA	25 dpm	130 dpm	25 dpm	130 dpm	dpm	A dpm	

Maximum Contact Dose Rate: 0.006 mrem/hr Transport Index: 0.0 mrem/hr

	α cpm	α dpm/100 cm2	β cpm	β dpm/100 cm2
ALARA Limit	N/A	60	N/A	500
Smear #				
1	2	LMDA	27	LMDA
2	0		29	
3	0		32	
4	0		26	
5	0		36	
6	0	LMDA	29	LMDA

Smear Locations: 1 - Bottom 2 - Front 3 - Right Side 4 - Back 5 - Left Side 6 - Top

George Economos
Surveyor Name

George Economos
Surveyor Signature

Supervisor Approval

23466-S-SHEET9176-99.9
Date: 01/04/05 Time:1452

4-18-05 16:12 Bag# 9176
10150 lb GR
041805 1612 9176 0010150

Straight Bill of Lading

Shipper	MHF-LS For GTE Operations Support Incorporated 140 Contiague Rock Road Hicksville, NY 11369	Date: 5/19/2005
Consigned to	MHF-LS @ New York-Atlantic Rail Spur Hicksville, NY 11369	Load in Gondola # MHFX
Emergency Contact:	CHEMTREC 800-424-9300	5227

Total All Trucks
28960

TR: TL:

Quantity	Description		Net Waste Weight
2	Soil, DOT Non-Regulated Waste, Containing		
	Radioactive Materials.		
	Package ID Number		**Pounds:**
	Liner	9152	18810
	Liner	9176	10150
			Total:
			28960
	Packages do not meet the DOT "radioactive material"		
	definition in 49 CFR 173.403.		
	Radionuclide: Ac-227,Th-227, Th232, Th230,Pa-231,Ra-223		
	Ra-226,Ra-228,Th-228,U-234,U-235,U-238		
	Total Activity: 12.4453 MBq		
	Physical Form: Solid		
	Chemical Form: Metal Oxide		

12.4453

GENERATOR CERTIFICATION: I hereby certify and declare that the contents of this consignment are fully and accurately described above by proper shipping name and are classified, packed, marked, and labeled, and are in all respects in proper condition for transport by highway according to applicable international and national government regulations

Printed/Typed Name	Signature		Date
Robert Miller for MHFLS at GTEOSI			5/19/2005
Transporter	Signature		Date
Priority Transport			5/19/2005

Attachment 5.10
TRANSPORT VEHICLE RELEASE CHECKLIST

Shipment Number- 0840.04.029

Truck Number- 38 - 44

Trailer Number- 225 226

A qualified MHF-LS shipping technician shall verify that each item listed is satisfactory and then place a Check Mark in the corresponding box.

1. Driver possesses a valid driver's license with a HAZMAT endorsement ☑
2. Driver possesses a valid copy of a "Research and Special Programs Administration" U.S. DOT Hazmat Registration Certificate ☑
3. If manifested on a Hazardous Waste Manifest, ensure the carrier possesses a current EPA ID # ☑
4. Lamps are operable ☑
   - Headlights and Brights
   - Warning Lights and Flashers
   - Brake Lights
5. Coupling devices are intact ☑
6. Tires are sufficient ☑
   - No fabric is exposed through tread or sidewall
   - Front wheel tires must have tread pattern to a depth of ≥1/8 inch
   - Other tires must have tread pattern to a depth of ≥1/16 inch
   - Re-treaded tires are not authorized
7. Horn is operable ☑
8. Windshield wipers are operable ☑
9. Rear-vision mirrors are adequate (1 on each side) ☑
10. Emergency equipment is on-hand and accessible ☑
    - Fire extinguisher
    - Warning devices- bi-directional emergency reflectors, triangles (3), or liquid burning flares
11. General vehicle integrity is satisfactory ☑
    - Frame appears undamaged
    - Flooring is sufficient to support load
    - If a closed transport vehicle, vehicle is closed
    - Vehicle is otherwise in unimpaired physical condition
12. Vehicle truck and trailer have current DOT inspection stickers on both components (Good for 1 year from date performed) ☑
13. Vehicle is properly placarded (Exclusive Use LSA, Yellow III and HRCQ only) ☑
14. Shoring, strapping, blocking and bracing is adequate to prevent shifting of lading ☑

MHF-LS Qualified Technician Signature [signature]
Shipment Date 5-19-05

Attachment 5.9
LOADING DIAGRAM

A qualified MHF-LS shipper shall complete the following diagram by writing the package number and corresponding weight at the approximate position in which it is placed. The space to the left of the diagram may be used for additional or explanatory information as necessary.

Shipment Number- 0840-04-029

Front

9152
18810-lbs

9176
10,150-lbs

Rear

MHF-LS Qualified Technician
Signature_____
Shipment Date_____

Attachment 5.15
RAILCAR INSPECTION FORM

Shipment Number	Carrier	Railcar Number
0840-04-029	NYARR / MHF	MHFX-5227

Item	SAT	UNSAT	Criteria	Comments
Coupler	☑	☐	Hardware intact, no cracks or broken welds, latching mechanism works properly, no loose or damaged parts	
Suspension	☑	☐	Hardware intact, no visible cracks or broken welds, coil springs seated and intact, inner and outer bearings intact and seated properly	
Wheel & Axle Assembly	☑	☐	Overall condition, no cracks or damaged areas on wheel surfaces, hubs centered, bolting intact, rims not bent or cracked	
Frame & Undercarriage	☑	☐	Main beams straight and centered, no major bends or damage, welds intact, no cracks	
Floors & Walls (Gondola, Boxcar)	☑	☐	No damage with open holes, punch throughs, ect. No rust damage, seams and welds intact, no rotting or other material problems, structurally sound	
Attachment Points or Tie Downs	☑	☐	Tie down hardware straight and intact, no cracks on or around attachment hardware, mechanical clips or latches operable and complete	
Doors (Boxcar Only)	☑	☐	Can be closed and secured properly, lubricated properly, rollers and tracks in operable condition, no loose or missing hardware, sealing surfaces intact and seals in serviceable condition	
Seals and Gasket	☑	☐	Seal Flanges intact with no dents or bends that affect sealing capability, gaskets pliable and in serviceable condition, no torn or missing areas, gasket appropriate to meet sealing requirements	
Seams (Gondola, Boxcar)	☑	☐	Seams intact, welds visibly sufficient, all corners and mating interfaces caulked and sealed properly	
Drains	☑	☐	Drains plugged or sealed properly, verify threaded plugs are tack welded or otherwise disabled, all other holes closed and sealed	
Brakes	☑	☐	Visibly inspect brake shoes, minimum 1" contact surface on all shoes, hoses and piping (tubing) mechanically sound, no missing or loose hardware, valves operate freely, no kinks or obstructions in piping or hoses	
Paint and Lettering	☑	☐	Overall good condition of exterior surfaces, identification numbering legible and intact, areas for placards or labels intact and structurally sound (Wood or metal panels)	
Bracing	☑	☐	Bracing and shoring must be sufficient to prevent shifting of lading during conditions normally incident to transportation	

MHF-LS Qualified Technician Signature _____

Shipment Date 5-19-05

MHFX	Shipment #	0	flag 1	flag 1	
	new	Bag #	9152	9176	
	Storage Loc.		18810	10150	
5227	0840-04-029	200000 [redacted]			[redacted]

container #
9176

shipping check sheet (For Form 540)

	Ac-227		corrected	activity mBq	activity mCi	activity Ci	SNM	source	
		2.635E-002	2.635E-002	4.4573E-03	1.2047E-04	1.2047E-07	grams	kg	
grams			pCi/g				1.6731E-09	1.6731E-12	
4571780		7.2000E+01							
	Pa-231			activity mBq	activity mCi	activity Ci	SNM	source	
10070		1.097E-001	1.097E-001	1.8556E-02	5.0152E-04	5.0152E-07	grams	kg	
grams							1.0671E-05	1.0671E-08	
4571780		4.7000E-02							
	Ra-223			activity mBq	activity mCi	activity Ci	SNM	source	
10070		5.764E-002	5.764E-002	9.7501E-03	2.6352E-04	2.6352E-07	grams	kg	
grams							5.1670E-12	5.1670E-15	
4571780		5.1000E+04							
	Ra-226			activity mBq	activity mCi	activity Ci	SNM	source	
10070		3.477E-001	2.5243E-01	4.2700E-02	1.1541E-03	1.1541E-06	grams	kg	1.37741
grams							1.1541E-06	1.1541E-09	
4571780		1.0000E+00							
	Ra228			activity mBq	activity mCi	activity Ci	SNM	source	
10070		6.161E-001	8.7390E-01	1.4783E-01	3.9953E-03	3.9953E-06	grams	kg	0.705
grams							1.4797E-08	1.4797E-11	
4571780		2.7000E+02							
	TH-227			activity mBq	activity mCi	activity Ci	SNM	source	
10070		2.635E-002	2.635E-002	4.4573E-03	1.2047E-04	1.2047E-07	grams	kg	
grams							3.8860E-12	3.8860E-15	
4571780		3.1000E+04							
	Th-228			activity mBq	activity mCi	activity Ci	SNM	source	
10070		5.896E-001	1.0648E+00	1.8012E-01	4.8681E-03	4.8681E-06	grams	kg	
grams							5.9367E-09	5.9367E-12	0.55371
4571780		8.2000E+02							
	Th-230			activity mBq	activity mCi	activity Ci	SNM	source	
10070		6.161E-001	4.5715E-01	7.7329E-02	2.0900E-03	2.0900E-06	grams	kg	
grams							9.9522E-05	9.9522E-08	1.34771
4571780		2.1000E-02							
	TH-232			activity mBq	activity mCi	activity Ci	SNM	source	
10070		6.161E-001	8.7390E-01	1.4783E-01	3.9953E-03	3.9953E-06	grams	kg	0.705
grams							3.6321E+01	3.6321E-02	
4571780		1.1000E-07							
	U-234			activity mBq	activity mCi	activity Ci	SNM	source	
10070		8.293E+000	7.3642E+00	1.2457E+00	3.3667E-02	3.3667E-05	grams	kg	1.12613
grams							5.4302E-03	5.4302E-06	
4571780		6.2000E-03							
	U-235			activity mBq	activity mCi	activity Ci	SNM	source	
10070		8.233E-001	1.0542E+00	1.7832E-01	4.8194E-03	4.8194E-06	grams	kg	0.781
grams							2.1906E+00	2.1906E-03	
4571780		2.2000E-06							
	U-238			activity mBq	activity mCi	activity Ci	SNM	source	
10070		8.293E+000	1.1192E+01	1.8931E+00	5.1166E-02	5.1166E-05	grams	kg	0.741
grams							1.5049E+02	1.5049E-01	
4571780		3.4000E-07							

Totals for all flag 1 data

			corrected	activity mBq	activity mCi	activity Ci	SNM	source	
10070		2.0415E+01	2.3326E+01	3.9502E+00	1.0676E-01	1.0676E-04	grams	kg	flag 1 data
			pCi/g	541 will be < than the 540 (MDA not added)			2.1906E+00	1.0681E-01	
79.92063492				data for NORM					
	U-nat		corrected pCi/g	activity mBq	activity mCi	activity Ci		source	
		9.1163E+00	1.2246E+01	2.0714E+00	5.5985E-02	5.5985E-05		kg	
								7.8652E-02	
		7.1000E-07							

U-nat		corrected pCi/g	activity mBq	activity mCi	activity Ci		source
	2.0415E+01	2.3326E+01	3.9502E+00	1.0676E-01	1.0676E-04		kg total
							1.1518E-01

norm data

container #
9152

shipping check sheet (For Form 540)

	Ac-227		corrected	activity mBq	activity mCi	activity Ci	SNM	source	
		3.462E-002	3.462E-002	1.0892E-02	2.9439E-04	2.9439E-07	grams	kg	
grams			pCi/g				4.0887E-09	4.0887E-12	
8503420		7.2000E+01							
	Pa-231			activity mBq	activity mCi	activity Ci	SNM	source	
18730		1.641E-001	1.641E-001	5.1630E-02	1.3954E-03	1.3954E-06	grams	kg	
grams							2.9690E-05	2.9690E-08	
8503420		4.7000E-02							
	Ra-223			activity mBq	activity mCi	activity Ci	SNM	source	
18730		3.991E-002	3.991E-002	1.2557E-02	3.3937E-04	3.3937E-07	grams	kg	
grams							6.6543E-12	6.6543E-15	
8503420		5.1000E+04							
	Ra-226			activity mBq	activity mCi	activity Ci	SNM	source	
18730		1.951E-001	1.4164E-01	4.4565E-02	1.2044E-03	1.2044E-06	grams	kg	1.37741
grams							1.2044E-06	1.2044E-09	
8503420		1.0000E+00							
	Ra228			activity mBq	activity mCi	activity Ci	SNM	source	
18730		9.151E-001	1.2980E+00	4.0839E-01	1.1038E-02	1.1038E-05	grams	kg	0.705
grams							4.0880E-08	4.0880E-11	
8503420		2.7000E+02							
	TH-227			activity mBq	activity mCi	activity Ci	SNM	source	
18730		3.462E-002	3.462E-002	1.0892E-02	2.9439E-04	2.9439E-07	grams	kg	
grams							9.4964E-12	9.4964E-15	
8503420		3.1000E+04							
	Th-228			activity mBq	activity mCi	activity Ci	SNM	source	
18730		9.501E-001	1.7159E+00	5.3986E-01	1.4591E-02	1.4591E-05	grams	kg	
grams							1.7794E-08	1.7794E-11	0.55371
8503420		8.2000E+02							
	Th-230			activity mBq	activity mCi	activity Ci	SNM	source	
18730		9.151E-001	6.7900E-01	2.1363E-01	5.7739E-03	5.7739E-06	grams	kg	
grams							2.7495E-04	2.7495E-07	1.34771
8503420		2.1000E-02							
	TH-232			activity mBq	activity mCi	activity Ci	SNM	source	
18730		9.151E-001	1.2980E+00	4.0839E-01	1.1038E-02	1.1038E-05	grams	kg	0.705
grams							1.0034E+02	1.0034E-01	
8503420		1.1000E-07							
	U-234			activity mBq	activity mCi	activity Ci	SNM	source	
18730		9.036E+000	8.0239E+00	2.5245E+00	6.8231E-02	6.8231E-05	grams	kg	1.12613
grams							1.1005E-02	1.1005E-05	
8503420		6.2000E-03							
	U-235			activity mBq	activity mCi	activity Ci	SNM	source	
18730		1.075E+000	1.3764E+00	4.3306E-01	1.1704E-02	1.1704E-05	grams	kg	0.781
grams							5.3202E+00	5.3202E-03	
8503420		2.2000E-06							
	U-238			activity mBq	activity mCi	activity Ci	SNM	source	
18730		9.036E+000	1.2194E+01	3.8367E+00	1.0369E-01	1.0369E-04	grams	kg	0.741
grams							3.0498E+02	3.0498E-01	
8503420		3.4000E-07							

Totals for all flag 1 data

			corrected	activity mBq	activity mCi	activity Ci	SNM	source
18730		2.3311E+01	2.6966E+01	8.4951E+00	2.2960E-01	2.2960E-04	grams	kg
			pCi/g	541 will be < than the 540 (MDA not added)			5.3202E+00	4.0533E-01
148.6507937				data for NORM				
	U-nat		corrected pCi/g	activity mBq	activity mCi	activity Ci		source
		1.0111E+01	1.3571E+01	4.2697E+00	1.1540E-01	1.1540E-04		kg
								1.6253E-01
		7.1000E-07						

U-nat		corrected pCi/g	activity mBq	activity mCi	activity Ci		source
	2.3311E+01	2.6966E+01	8.4951E+00	2.2960E-01	2.2960E-04		kg total
							2.6289E-01

norm data

manifest number

0840-04-029

enter total grams (U-235) 541

7.5108

enter total source kg 541

0.59215

total of both in grams

599.6608

element wt in grams

600

wt % isotope

1.253

isotope wt grams U-235

7.5108

Posillico Bros. Asphalt Co.

1610 New Highway, Farmingdale, N.Y. 11735
Plant Tele: 293-2620, 2621

HOT STORAGE

8:27 11-30-04 TICKET NUMBER 9152

18810 lb GROSS

Posillico Bros. Asphalt Co.

1610 New Highway, Farmingdale, N.Y. 11735
Plant Tele: 293-2620, 2621

HOT STORAGE

16:12 4-18-05 TICKET NUMBER 9176

10150 lb GROSS

CHASE ENVIRONMENTAL GROUP, INC.
waste services, remediation & consulting

3501 Workman Road, Suite H
Knoxville, TN 37921

(865) 584-0833
FAX (865) 584-1961

October 12, 2005

Mr. Richard Hafner
GTEOSI
140 Cantiague Rock Road
Hicksville NY 11801-1127

Dear Richard,

Enclosed please find a copy of the stamped and signed NRC Form 540 for the following manifest numbers:

AL-2005-163

This acknowledges receipt by Alaron Corp. on September 29, 2005 of material delivered to Alaron from your facility. If you have any questions concerning this shipment, please call us toll-free at 877-389-2124.

We appreciate the opportunity to be of service to GTEOSI and look forward to working with you in the future.

Sincerely,

Gina O'Neil

Gina O'Neil
Customer Service Representative

NRC FORM 540

UNIFORM LOW-LEVEL RADIOACTIVE WASTE MANIFEST SHIPPING PAPER

5. SHIPPER- NAME AND FACILITY
Chase Environmental Group, Inc.
11450 Watterson Court
Louisville, KY 40299

SHIPPER ID #: N/A
X COLLECTOR
PROCESSOR

7. NRC FORM 540 AND 540A: PAGE 1 __1__ PAGE(S)
NRC FORM 541 AND 541A: OF __1__ PAGE(S)
NRC FORM 542 AND 542A: __1__ PAGE(S)
ADDITIONAL INFORMATION: None PAGE(S)

8. Manifest Number (Use this number on all continuation pages): AL-2005-163

1. EMERGENCY TELEPHONE NUMBE (INCLUDE AREA CODE): 800-424-9300

ORGANIZATION: Chemtrec WSDS #: CHEN01RAD

USER PERMIT NUMBER: T-KY003-L05
SHIPMENT #: N/A
GENERATOR TYPE (SPECIFY):
CONTACT: Janet Baker
TELEPHONE #: 865-584-0833

9. CONSIGNEE-NAME AND FACILITY ADDRESS
Alaron Corporation
Rt. 18 and Park Rd.
Wampum, PA 16157

Contact: Jonathan Wallace
Telephone Number (Include area code): 724-535-5777

2. IS THIS AN "EXCLUSIVE USE" SHIPMENT?
[ ] YES
[x] NO

3. TOTAL NUMBER OF PACKAGES IDENTIFIED ON THIS MANIFEST: 1

6. CARRIER NAME AND ADDRESS
R & R Trucking
PO Box 545
Duenweg, MO 64841

EPA ID #: N/A
SHIPPING DATE: ~~9/29/2005~~ 9-28-05
CONTACT: Don Richey
TELEPHONE #: 417-623-6885

SIGNATURE: Barry Blusher
DATE: 9-28-05

SIGNATURE Authorized consignee acknowledging waste reciept: MCK 9-29-05
Date: 9-29-05

4. DOES EPA REGULATED WASTE REQUIRING A MANIFEST ACCOMPANY THIS SHIPMENT?
[ ] YES
[x] NO

EPA MANIFEST NUMBER: NA

10. Certification

This is to certify that the herein named materials are properly classified, described, packaged, marked, and labeled and are in proper condition for transportation according to the applicable regulations of the Department of Transportation. This also certifies that the materials are classified, packaged, marked and labeled and are in proper condition for transporting and disposal as described in accordance with the requirements of 10CFR parts 29 and 61, or equivalent state regulations.

AUTHORIZED SIGNATURE: Barry Blusher
TITLE: Technician for Jim Cabage,
DATE: 9-28-05

11. U.S. DEPARTMENT OF TRANSPORTATION DESCRIPTION (Including proper shipping name, hazard class, UN ID number, and any additional information)	12 DOT LABEL "RADIOACTIVE"	13 TRANSPORT INDEX	14 PHYSICAL AND CHEMICAL FORM	15 INDIVIDUAL RADIONUCLIDES	16 TOTAL PACKAGE ACTIVITY IN MBq	17 LSA/SCO CLASS	18. TOTAL WEIGHT OR VOLUME m^3	19. ID NUMBER OF PACKAGE
Radioactive material, excepted package-limited qualtity of material, 7, UN2910 Compactible trash for Envirocare	NA	NA	Solid/Oxide	Am-241; Cd-109; Co-57; Co-60; Cr-51; Cs-137; Sn-113; Sr-85; Te-123m; Y-88	1.92E-01	NA	0.038	AL-CT-E-05-432

Generator Certification Statement:
The constituents of the waste manifested herein are known to the generator. There are no EPA RCRA, pathogenic or other hazards present other than those specifically listed on the Form 541.

Richard Hafner — Print name
MCK — Signature
9-28-05 — Date

RECEIVED
SEP 29 2005
ALARON CORPORATION

CONSIGNEE ORIGINAL (MUST ACCOMPANY WASTE IN TRANSIT)

NRC FORM 541 — US NUCLEAR REGULATORY COMMISSION

UNIFORM LOW-LEVEL RADIOACTIVE WASTE MANIFEST

CONTAINER AND WASTE DESCRIPTION

1. MANIFEST TOTALS

Number of Packages	Net Waste Vol. m3	Net Waste Wght kg	Special Nuclear Material (grams) U-233	U-235	Pu	Total
1	0.038	16.5	NP	NP	NP	NP

Activity (MBq/mCi) All Nuclides	Tritium	C-14	Tc-99	I-129	Source (kg)
1.92E-01 MBq	NP	NP	NP	NP	NP
5.20E-03 mCi					

2. MANIFEST NUMBER: AL-2005-163

3. PAGE 1 OF 1 PAGE(S)

4. SHIPPER NAME: Chase Env. Group

SHIPPER ID NUMBER: N/A

DISPOSAL CONTAINER DESCRIPTION / WASTE DESCRIPTION FOR EACH WASTE TYPE IN CONTAINER

5. Container Identification Number/ Generator Number	6. Container Description (See Note 1)	7. Volume (m3)	8. Waste and Container Weight (kg)	9. Surface Radiation Level _X_ uSv/hr ___ mSv/hr	10. Surface Contamination MBq/100 cm2 Alpha	Beta-Gamma	11. Waste Descriptor (See Note 2)	12. Approximate Waste Volume(s) in Container (m3)	13. Sorbent Solidification Stabilization Media (See Note 3)	14. Chemical Description: Chemical Form/ Chelating Agent	Weight % Chelating Agent (if < 0.1%)	15. Radiological Description: Individual Radionuclides and Activity (MBq) and Container Total; or Container Total Activity and Radionuclide Percent: Nuclide	MBq	mCi	16. Waste Class A-A Stable A-U-A Unstable B-Class B C-Class C
AL-CT-E-05-432/ 0360	4	0.038	16.5	<5.00	<3.67E-6	<3.67E-5	39	0.038	100	Oxide/NP	NP	Am-241	4.22E-03	1.14E-04	NA
												Cd-109	4.67E-02	1.26E-03	
												Co-57	1.78E-03	4.81E-05	
												Co-60	1.82E-02	4.92E-04	
												Cr-51	5.61E-02	1.52E-03	
												Cs-137	7.57E-03	2.05E-04	
												Sn-113	8.34E-03	2.25E-04	
												Sr-85	1.07E-02	2.89E-04	
												Te-123m	4.52E-03	1.22E-04	
												Y-88	3.41E-02	9.22E-04	
												TOTAL	1.92E-01	5.20E-03	

NOTE 1: Container Description Codes. For containers/ waste requiring disposal in approved structural overpacks, the numerical code must be followed by "OP".

1. Wooden Box or Crate
2. Metal Box
3. Plastic Drum or Pail
4. Metal Drum or Pail
5. Metal Tank or Liner
6. Concrete Tank or Liner
7. Polyethylene Tank or Liner
8. Fiberglass Tank or Liner
9. Demineralizer
10. Gas Cylinder
11. Bulk, Unpackaged Waste
12. Unpackaged Components
13. High Integrity Container
19. Other: describe in Item 6, or additional page

Note 2: Waste Descriptor Codes. (Choose up to three which predominate by volume.)

20. Charcoal
21. Incinerator Ash
22. Soil
23. Gas
24. Oil
25. Aqueous Liquid
26. Filter Media
27. Mechanical Filter
28. EPA or State Hazardous
29. Demolition Rubble
30. Cation Ion Exchange Media
31. Anion Ion Exchange Media
32. Mixed Bed Ion Exchange Media
33. Contaminated Equipment
34. Organic Liquid (Except Oil)
35. Glassware or Labware
36. Sealed Source/Device
37. Paint or Plating
38. Evaporator Bottoms/Sludges/ Concentrates
39. Compactible Trash
40. Noncompactible Trash
41. Animal Carcass
42. Biological Material (Except Animal Carcass)
43. Activated Material
59. Other: Describe in Item 11, or Additional Page

Note 3: For solidification media that meet disposal site structural stability requirements, the numerical code must be followed by "-S."
For all solidification media, the vendor (manufacturer) and brand name must also be identified in Item 13. Code 100 = NONE REQUIRED.

Sorption

60. Speedi Dri
61. Celatom
62. Floor Dry/ Superfine
63. Hi Dri
64. Safe-T-Sorb
65. Safe-N-Dri
66. Floroc
67. Floroc X
68. Solid-A-Sorb
69. Chemsil 30
70. Chemsil 50
71. Chemsil 3030
72. Diosperl HP200
73. Diosperl HP500
74. Petrosel
75. Petrosel II
76. Aquasel
77. Aquasel II
89. Other: Describe in Item 13, or additional page

Solidification

90. Cement
91. Concrete (Encapsulation)
92. Bitumen
93. Vinyl Chloride
94. Vinyl Ester Styrene
99. Other: Describe in Item 13, or Additional Page
100. None Required

NRC FORM 542
(5-1998)

U.S. NUCLEAR REGULATORY COMMISSION

UNIFORM NARM RADIOACTIVE WASTE MANIFEST

MANIFEST INDEX AND REGIONAL COMPACT TABULATION

List all original "PROCESSED WASTE" before "COLLECTED WASTE".

1. WASTE COLLECTOR/PROCESSOR

NAME: Chase Environmental Group, Inc.

IDENTIFICATION NUMBER: T-KY003-L05

SHIPPING DATE: 9/29/2005

SHIPPER USE ONLY

2. MANIFEST NUMBER: AL-2005-163

3. PAGE_1_OF _1_PAGE(S)

4. GENERATOR IDENTIFICATION NUMBER	5. GENERATOR NAME PERMIT NUMBER AND TELEPHONE NUMBER	6. GENERATOR FACILITY ADDRESS	7. PREPROCESSED WASTE (OR MATERIAL) VOLUME (m3)	8. MANIFEST NUMBER UNDER WHICH WASTE (OR MATERIAL) RECEIVED AND DATE OF RECEIPT	9. WASTE CODE	10. ORIGINATING COMPACT OR STATE	11. AS PROCESSED/COLLECTED TOTAL A. SOURCE MATERIAL (kg)	B. SNM (g)	C. ACTIVITY (MBq)	D. VOLUME (m3)
0360	GTEOSI 516-932-9157	140 Cantiague Rock Road Hicksville, NY 11801-1127	0.038	NA	C	NY	NP	NP	1.92E-01	0.038
TOTALS OF ALL PAGES (NRC FORMS 542 AND 542A)							0.00E+00	0.000	1.92E-01	0.038

NRC FORM 542 (5-1998)

GTEOSI Project

In 2005 there was no mixed waste shipped. All shipments were Soil DOT NON-RAD.