SDMS Document ID
2118916

2118916
EPA NO. U590002
FILE NO. P2-8

PROCESS FLOWCHARTS
AND
DETAILED DESCRIPTIONS

Attachment G

Information Request #4

April 19, 1990

APEX MILL FLOWSHEET DESCRIPTION

The ore from the Apex mine is transported by truck to the Apex mill. There it is stockpiled until required for feed. The ore is moved from the stockpile by front end loader where it enters the grinding circuit.

Grinding

Prior to shipment to the mill, the ore is crushed to 3/4 inch in diameter. At the mill, the ore is ground wet in a ball mill using steel grinding balls. The discharge from the grinding mill is screened, with the oversize particles returning to the mill, and the fine particles passing to the next step. After passing the grinding-screening step ore particles are less than 0.01 inch diameter.

Carbonate Removal

The ore contains 6% carbonate in the form of calcite ($CaCO_3$) and dolomite ($MgCO_3$). Because the carbonate interferes with the subsequent beneficiation steps it is removed by giving the ore an acid wash. This is accomplished in a large agitation tank to which a weak solution of sulfuric acid is added.

1st Stage Leach

After carbonate removal the ore enters the first stage leach circuit. This circuit consists of 17 tanks arranged for series flow. Sulfuric acid is added to the first 14 tanks to maintain an acid strength of 30 g/l H_2SO_4. Sulfur dioxide is also added to assist in the leaching. No acid or sulfur dioxide is added to the last three tanks allowing acid concentration to drop to less than 20 g/l H_2SO_4.

Most of the germanium is leached in the first stage leach circuit.

Thickener No. 1

Thickener No. 1 is a settling vessel which receives the discharge from the first stage leach circuit. The solids settle to the bottom of the vessel and are pumped to second stage leach circuit. The clear liquid overflows the vessel and goes to the gypsum precipitation circuit.

2nd Stage Leach

The second stage leach circuit is a series of five agitation tanks. The solids from Thickener No. 1 are mixed with sulfuric acid and sulfur dioxide. The acid concentration is 70-90 g/l H_2SO_4.

The remainder of soluble germanium is leached in the second stage leach circuit.

Thickener No. 2

Thickener No. 2 receives the discharge from the second stage leach circuit. The solids settle and are pumped to the third stage leach circuit. The clear liquid overflow is returned to first stage leach circuit.

3rd Stage Leach

The third stage leach circuit is a series of three agitation tanks. The solids from thickener No. 2 are mixed with sulfuric acid at a concentration of 300 g/l H_2SO_4.

Much of the gallium is leached from the ore in this stage.

Thickener No. 3

Thickener No. 3 receives the discharge from the third stage leach circuit. The solids are settled and pumped to the belt filter. The liquid overflow is returned to the second stage leach circuit.

Belt Filter and Repulp

The belt filter is a horizontal vacuum filter. The solids from thickener No. 3 are filtered and washed, after which they are reslurried with water. These tailings are then pumped to a neutralization circuit. The filtrate and the wash liquid are returned to thickener No. 3.

Gypsum Precipitation

The liquid overflowing thickener No. 1 contains germanium, gallium, and copper as well as impurities. One of the impurities is gypsum. By holding the solution for an extended period of time in a quiet tank much of the gypsum settles out and can be removed. This gypsum removal operation reduces problems downstream.

Clarifier

The clarifier is a second settling tank which allows additional time for gypsum and other solids to settle and be removed.

Copper Solvent Extraction

The copper solvent extraction circuit is a system of agitation tanks and settlers. Here the clarified leach solution is mixed with an organic liquid,

which has an affinity for copper. The copper is removed from the leach solution and eventually is isolated in an acid solution. The leach solution, which remains after the copper extraction step, goes to the gallium solvent extraction circuit.

Copper Electrowinning

The acid solution containing the copper is pumped to a copper electrowinning circuit. Here the copper is plated, electrolytically, to stainless steel cathodes. The copper plates are periodically stripped, packaged, and sold.

Gallium Solvent Extraction

The gallium solvent extraction circuit is similar to the copper circuit. An organic liquid with an affinity for gallium is used. The gallium is separated from germanium and the bulk of impurities in the leach solution. The leach solution, which remains after the gallium solvent extraction step, goes to the germanium solvent extraction circuit.

Gallium Purification and 2nd Solvent Extraction

In order to be marketable, gallium must be very pure. This is achieved in a series of purification steps including a second solvent extraction stage. The purification steps essentially remove all impurities from the gallium solution.

Gallium Electrowinning

Gallium metal is recovered from solution by electrowinning. The metal is collected, packaged and sold.

Germanium Solvent Extraction

The germanium solvent extraction circuit separates germanium from the remaining elements in the liquid. A combination of organic reagents with a strong affinity for germanium is used. The germanium is isolated with minor amounts of impurities in an alkaline solution.

Germanium Precipitation

Germanium is precipitated from the alkaline solution by neutralizing it with a sulfuric acid solution. The precipitate is sodium germanate, a white crystalline compound. Occasionally an excess of impurities will be co-precipitated with the sodium germanate. When this happens the sodium germanate is dissolved in a caustic solution and re-precipitated.

The sodium germanate is filtered from the liquid, dried, packaged and sold.

Neutralization Circuit

The leach solution which remains after the germanium precipitation step, is moderately acidic and contains heavy metals which were dissolved in the solution.

This solution is treated in the neutralization circuit. Limestone is used to destroy the acid, causing the pH to rise to 4.5. Slurried lime is then added to immobilize the heavy metals. The treated effluent is pumped to tailing ponds. Analyses to date indicate that this effluent does not exhibit any RCRA hazardous waste characteristics.

JDS:dld

APEX FLOWSHEET - SIMPLIFIED

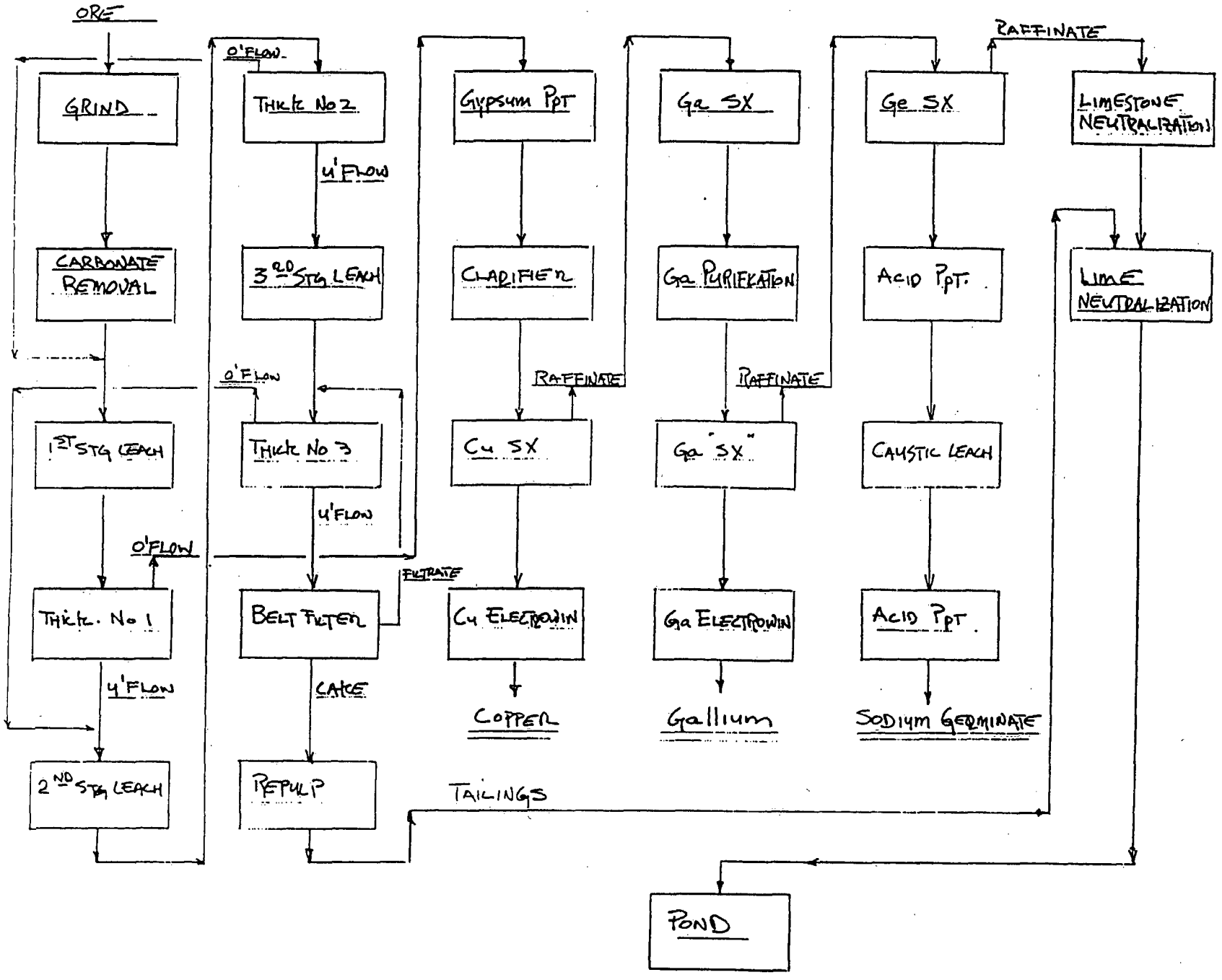

HECLA MINING COMPANY
COEUR D'ALENE, IDAHO 83814

BY	DATE 3/22/90	JOB TITLE	JOB NO.
CHK.	DATE		DIVISION
DWG NO			SHEET OF

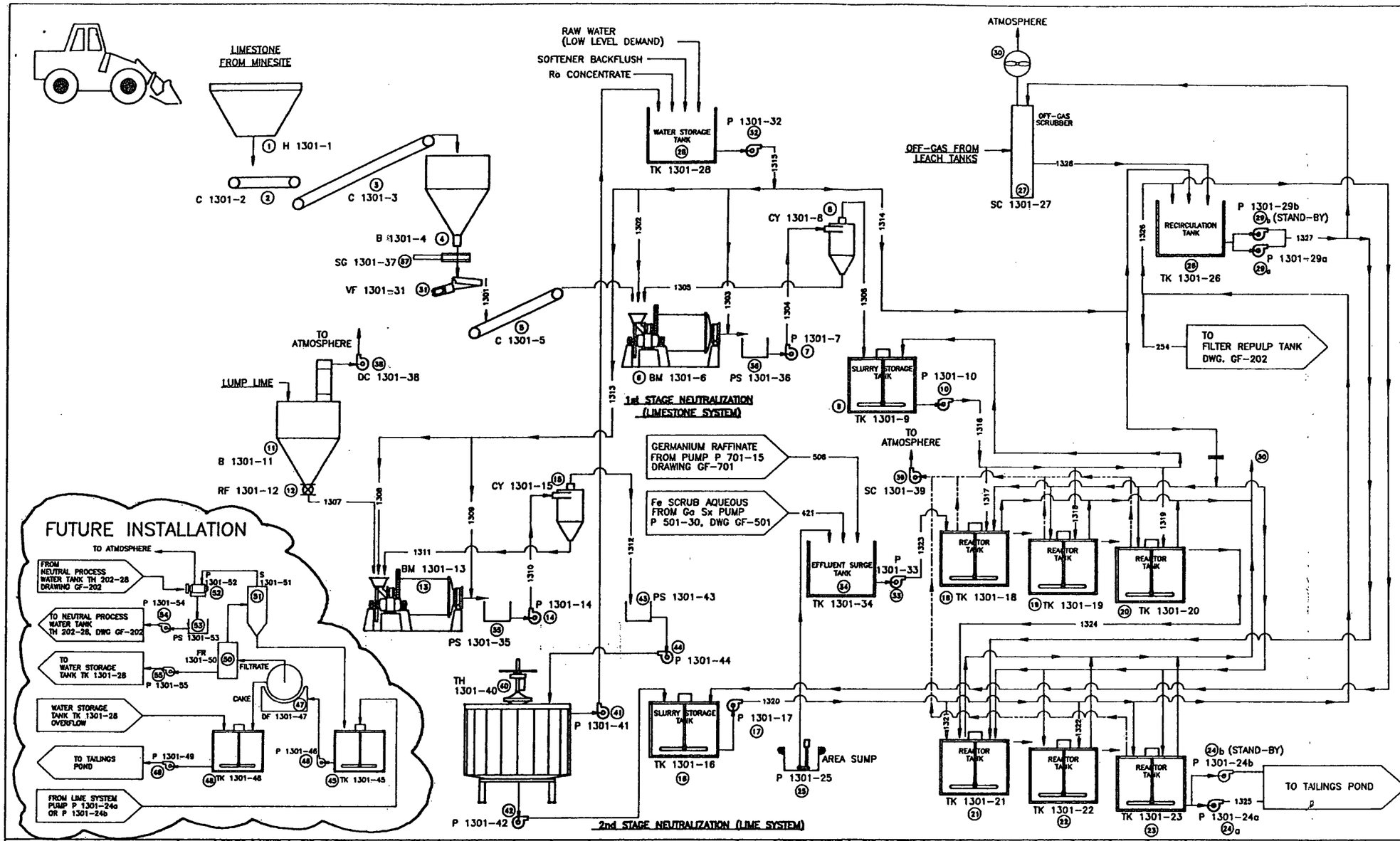

EQUIPMENT LIST

ITEM	H.P.	DESCRIPTION	EQUIP. NO.
1		3 YD³ FEED HOPPER	H 1301-1
2	3	24" x 8' BELT FEEDER	C 1301-2
3	5	18" x 84'L, BELT CONVEYOR	C 1301-3
4		230 TON LIMESTONE STORAGE BIN	B 1301-4
5		18" x 26'L, BELT CONVEYOR	C 1301-5
6	50	5'ø x 5'H EIMCO BALL MILL	BM 1301-6
7	10	1 1/2" GALIGHER PUMP	P 1301-7
8		3" KREBS HYDROCYCLONE	CY 1301-8
9	5	TANK 8'ø x 8'H R.L. SLURRY STORAGE	TK 1301-9
10	5	1 1/2" GALIGHER PUMP	P 1301-10
11		200 TON LUMP LIME STORAGE BIN	B 1301-11
12	2	8"ø ROTARY FEEDER	RF 1301-12
13	10	30"ø x 36" DENVER BALL MILL	BM 1301-13
14	10	1 1/2" GALIGHER PUMP	P 1301-14
15		3" KREBS HYDROCYCLONE	CY 1301-15
16	5	TANK 8'ø x 8'H MS W/AGITATOR SLURRY STORAGE	TK 1301-16
17	10	1 1/2" GALIGHER PUMP	P 1301-17
18	3	12'ø x 15'H REACTOR W/AGITATOR	TK 1301-18
19	2	10'ø x 10'H FRP REACTOR WITH AGITATOR	TK 1301-19
20	2	10'ø x 10'H FRP REACTOR WITH AGITATOR	TK 1301-20
21	2	8'ø x 12'H REACTOR W/AGITATOR 3' FALSE BOTTOM	TK 1301-21
22	2	8'ø x 8'H FRP REACTOR	TK 1301-22
23	2	8'ø x 8'H FRP REACTOR	TK 1301-23
24a	7.5	3" x 2" GOULDS PUMP	P 1301-24a
24b	7.5	3" x 2" GOULDS PUMP	P 1301-24b
25	5	1 1/2" GALIGHER SUMP PUMP PUMP	P 1301-25
26		7'ø x 7'H RECIRCULATION TANK	TK 1301-26
27	10	OFF-GAS SCRUBBER	SC 1301-27
28	–	TANK 7'ø x 8'H FRP WATER STORAGE	TK 1301-28
29a	10	2" GALIGHER PUMP	P 1301-29a
29b	10	2" GALIGHER PUMP	P 1301-29b
30	10	SCRUBBER FAN (FURNISHED WITH SCRUBBER)	
31		VIBRATING FEEDER	VF 1301-31
32	10	2" GOULDS PUMP – IRON	P 1301-32
33	1.5	1" GOULDS PUMP	P 1301-33
34	3	12'ø x 14'H FRP SURGE TANK	TK 1301-34
35		PUMP SUMP	PS 1301-35
36		PUMP SUMP	PS 1301-36
37		SLIDE GATE	SG 1301-37
38		BIN MOUNT DUST COLLECTOR	DC 1301-38
39		EXIST. 3 STAGE SCRUB. EXHAUST	SC 1301-39
40	2	THICKENER 20'ø x 12'	TH 1301-40
41	5	2" x 1 1/2" GALIGHER PUMP	P 1301-41
42	AIR	3" x 2" DORR PUMP	P 1301-42
43		PUMP SUMP	PS 1301-43
44		PUMP	P 1301-44
45		FUTURE TANK WITH AGITATOR	TK 1301-45
46		FUTURE PUMP	P 1301-46
47		FUTURE FILTER	DF 1301-47
48		FUTURE TANK WITH AGITATOR	TK 1301-46
49		FUTURE PUMP	P 1301-49
50		FUTURE FILTRATE RECIEVER	FR 1301-50
51		FUTURE BAROMETRIC SEPARATOR	S 1301-51
52		FUTURE VACUUM PUMP	P 1301-52
53		FUTURE SUMP PUMP	PS 1301-53
54		FUTURE PUMP	P 1301-54
55		FUTURE PUMP	P 1301-55

STREAM NUMBER	PHASE	SOLIDS LBS/HR	LIQUID LBS/HR	GAS LBS/HR	TOTAL LBS/HR	GPM	SG/ % SOLIDS	TEMP °F	H_2SO_4 g/l
1301 LIMESTONE FEED	SOLID	8,400	538	–	8,938	–	2.7	70	–
1302 GRIND WATER	LIQUID	–	3,084	–	3,084	6.1	1.0	70	–
1303 DILUTION WATER	LIQUID	–	21,600	–	21,600	43.2	1.0	70	–
1304 CYCLONE FEED	SLURRY	25,200	32,400	–	57,600	83.5	1.38/44	70	–
1305 CYCLONE UNDERFLOW	SLURRY	16,800	7,200	–	24,000	28.8	1.79/70	70	–
1306 CYCLONE OVERFLOW	SLURRY	8,400	25,200	–	33,600	56.8	1.19/25	70	–
1307 LIME FEED	SOLID	3,600	–	–	3,600	–	2.3	70	–
1308 GRIND WATER	LIQUID	–	14,400	–	14,400	30.2	1.0	70	–
1309 DILUTION WATER	LIQUID	–	18,000	–	18,000	37.8	1.0	70	–
1310 CYCLONE FEED	SLURRY	5,400	34,200	–	39,600	73	1.08/13.6	<150	–
1311 CYCLONE UNDERFLOW	SLURRY	1,800	1,800	–	3,600	5	1.39/50.0	<150	–
1312 CYCLONE OVERFLOW	SLURRY	3,600	32,400	–	36,000	68	1.06/10.0	<150	–
1313 TOTAL WATER TO SLAKING	LIQUID	–	32,400	–	32,400	68	1.0	70	–
1314 WATER TO SPRAYS & SCRUBBER	LIQUID	-------	AS REQ'D	-------	-------		–	–	
1315 TOTAL WATER TO NEUTRALIZATION	LIQUID	–	57,600	–	57,600	115	1.0	70	–
1316 LIMESTONE SLURRY DISTR.	SLURRY	6,800	19,600	–	26,400	44.5	1.19/25	70	–
1317 LIMESTONE TO 1ST REAC.	SLURRY	1,470	4,410	–	5,880	9.9	1.19/25	70	–
1318 LIMESTONE TO 2nd REAC.	SLURRY	1,465	4,395	–	5,860	9.9	1.19/25	70	–
1319 LIMESTONE TO 3rd REAC.	SLURRY	1,465	4,395	–	5,860	9.9	1.19/25	70	–
1320 LIME DISTRIBUTION DISTR.	SLURRY	5,400	48,600	–	54,000	99.6	1.06/10	100	–
1321 LIME TO 4th REAC.	SLURRY	2,988	26,890	–	29,878	55.1	1.06/10	100	–
1322 LIME TO 5th REAC.	SLURRY	331	2,979	–	3,310	6.1	1.06/10	100	–
1323 EFFLUENT TO NEAUTRALIZATION	LIQUID	–	36,352	–	36,352	62.2	1.17	80	84.4
1324 DISCHG. FROM LIMESTONE NEUT.	SLURRY	9,938	42,077	–	52,015	80.8	1.29	90	–
1325 DISCHARGE TO POND	SLURRY	13,531	74,412	–	87,943	151.8	1.18	100	–
1326 LIME TO SCRUBBER	SLURRY	274	2,466	–	2,740	5.1	1.06/10	100	–
1327 SCRUBBER RECIRCULATION	SLURRY	8,598	77,384	–	85,980	160	1.06/10	100	–
1328 SCRUBBER SUMP	SLURRY	8,870	79,830	–	88,700	165.1	1.06/10	100	–
1329 SCRUBBER EMISSION	GAS	–	–	–	–	~2,000 acfm	–	100	–
1330 REAC. TANK EMISSION	GAS	–	–	1,934	1,934	260 acfm	–	100	–
1331 SCRUBBER BLEED	SLURRY	274	2,466	–	2,740	5.1	1.06/10	100	–
254 LIME TO LEACH RESIDUE	SLURRY	7	63	–	70	0.1	1.06/10	100	–

STREAM NUMBER	PHASE	SOLIDS LBS/HR	LIQUID LBS/HR	GAS LBS/HR	TOTAL LBS/HR	GPM	SG	TEMP °F	H_2SO_4 g/l
508 Ge Sx RAFFINATE	LIQUID	–	36,095	–	36,095	61.7	1.17	80	85
421 PREG SCRUB SOLUTION	LIQUID	–	257	–	257	0.5	1.10	70	–

THIS DRAWING IS THE PROPERTY OF
HECLA MINING COMPANY
THIS DRAWING IS FURNISHED FOR THE SOLE USE OF THE RECIPIENT AND ACCEPTANCE OF SAME CONSTITUTES AN AGREEMENT THAT IT WILL NOT BE PUBLISHED, REPRODUCED, OR GIVEN TO ANY OTHER PARTY WITHOUT OUR PERMISSION UNLESS FURNISHED TO RECIPIENT UNDER CONTRACT PROVISIONS AND SHALL REMAIN THE PROPERTY OF HECLA MINING COMPANY SUBJECT TO RETURN UPON REQUEST.

REVISION	DATE	DESCRIPTION	BY	APP'D	APP'D

REFERENCE

ENGINEER
DRAWN BY R.A. HORNE
TRACED BY
CHECKED BY
APPROVED BY
DATE 11/2/89
SCALE

APEX PROJECT AREA 1300

NEUTRALIZATION SYSTEM FLOW DIAGRAM

HECLA MINING COMPANY

REVISION NO. 0

DRAWING NO. GF-1301

PLANT AREA WATER BALANCE

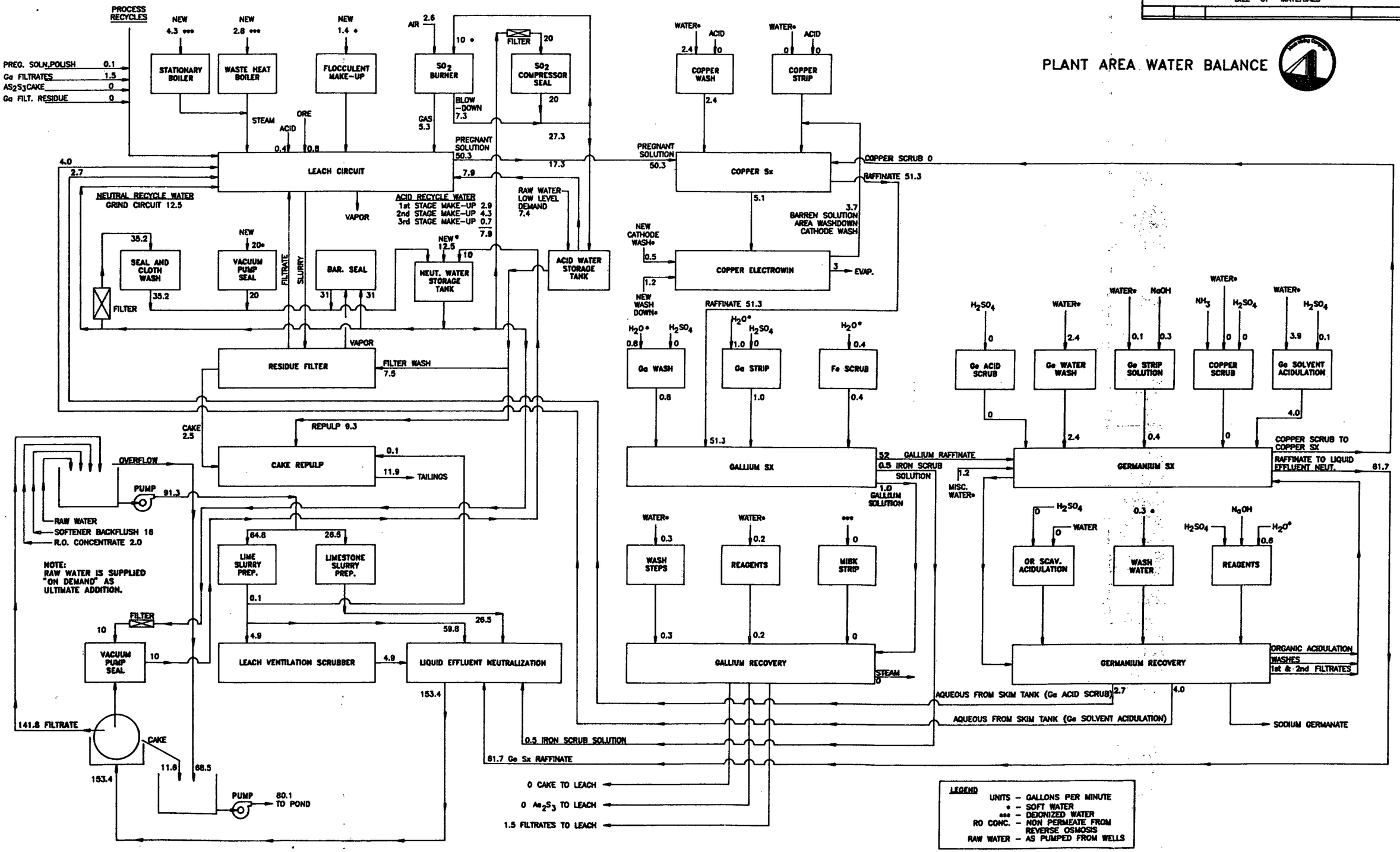

BILL OF MATERIALS

REVISION	DATE	DESCRIPTION	BY	APPD	APPD

HECLA MINING COMPANY

TOLERANCES: TOLERANCES ON DIMENSIONS, UNLESS OTHERWISE NOTED, ARE (PLUS-OR MINUS) NON ACCUMULATIVE
MACHINED .010"
STRUCTURAL 1/16"
ALL OTHERS 1/32"

DRAWN BY J.A. VIGEN
DATE 11/2/69
SCALE NO SCALE

APEX PROJECT
PLANT AREA WATER BALANCE

HECLA MINING COMPANY

GF-1031

Typical feedstock during Hecla Mining Company operations during the Gallium/Germanium operations.

Ga – 0.043%
Ge – 0.115%
Cu – 1.33%
Zn – 1.42%
Fe – 25.3%
As – 0.74%
SiO2 – 45.5%
CO2 – 1.61%

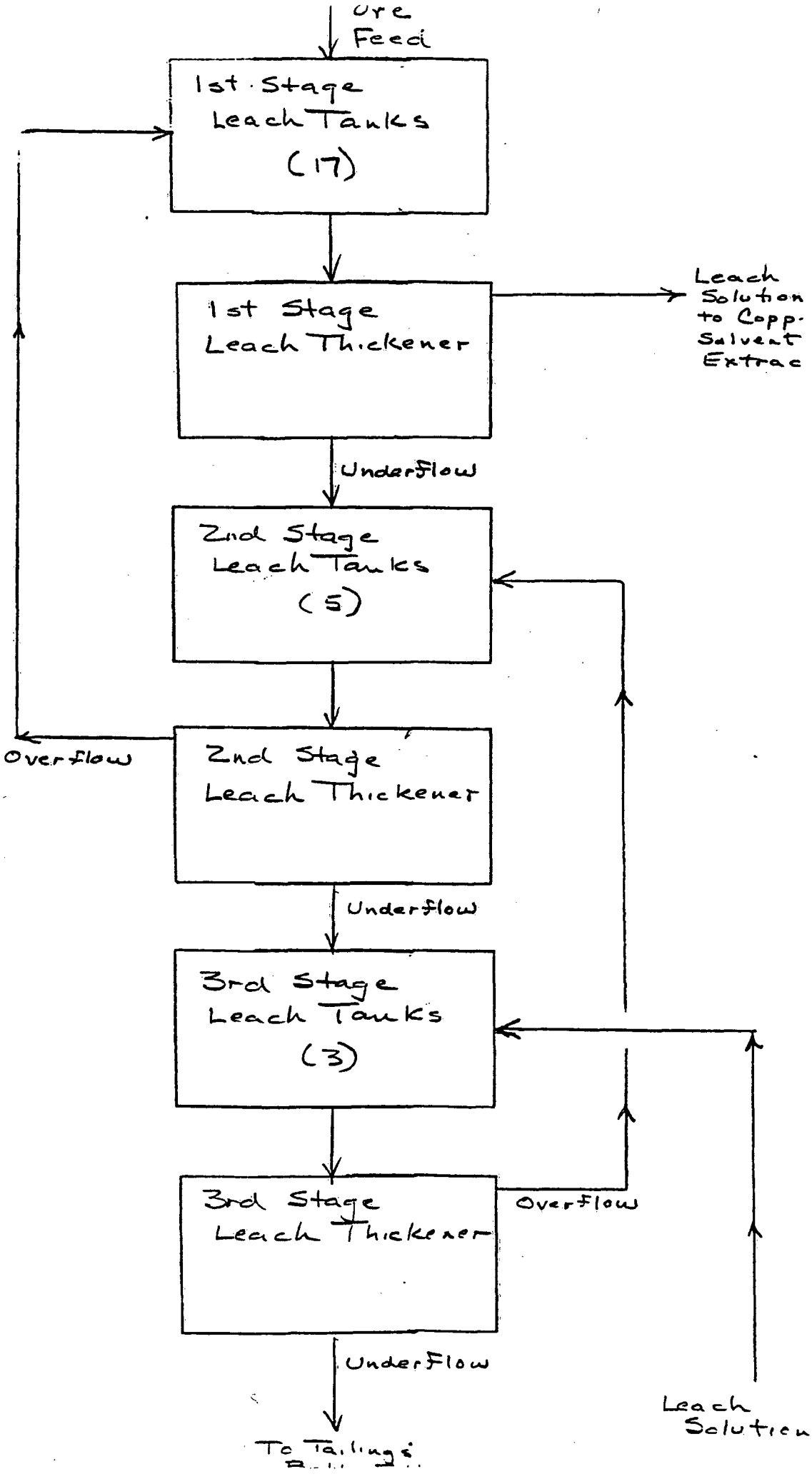
Ore Feed
1st Stage Leach Tanks (17)
1st Stage Leach Thickener
Leach Solution to Copp. Solvent Extrac
Underflow
2nd Stage Leach Tanks (5)
Overflow
2nd Stage Leach Thickener
Underflow
3rd Stage Leach Tanks (3)
3rd Stage Leach Thickener
Overflow
Underflow
To Tailings
Leach Solution

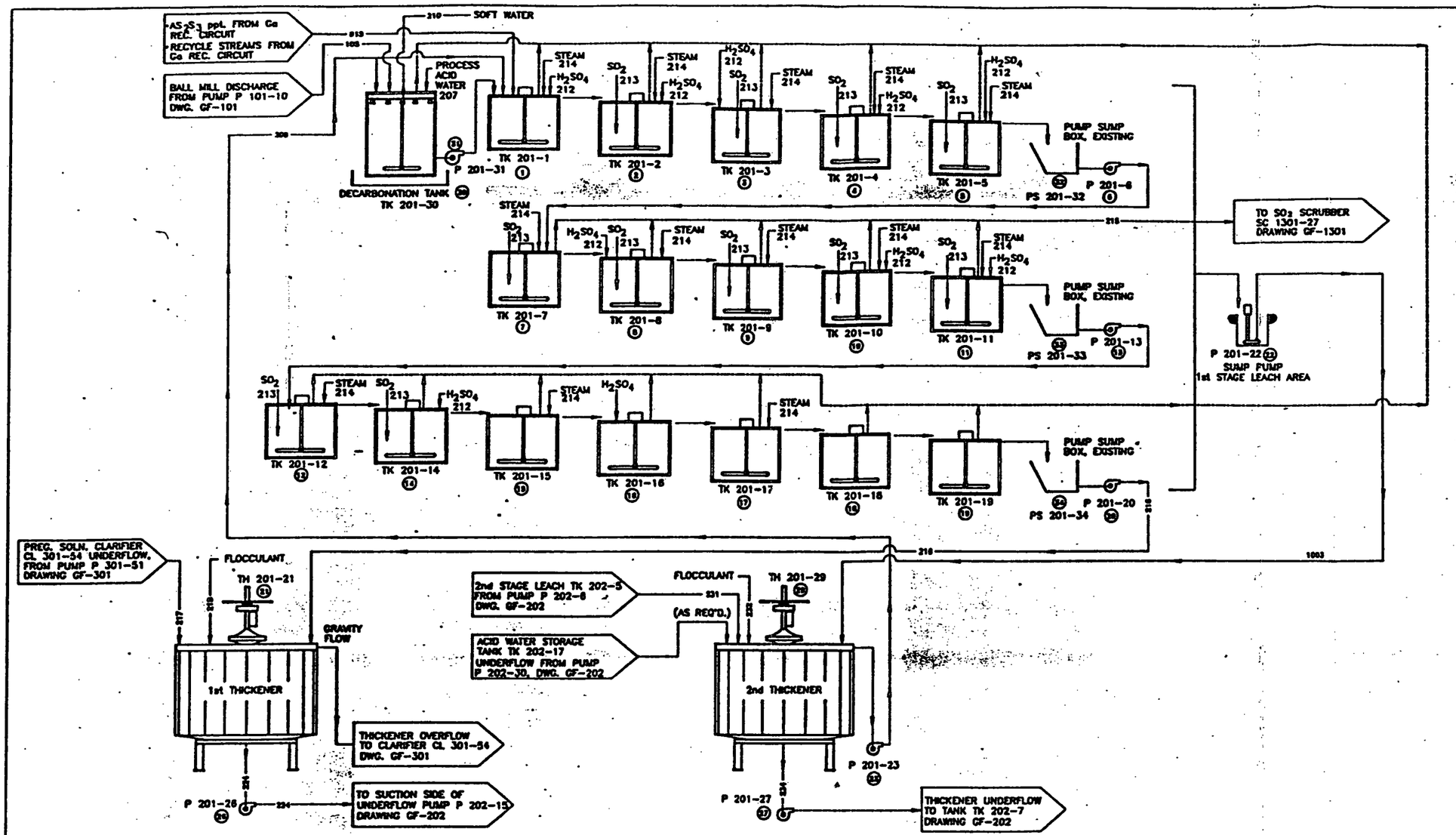

STREAM NUMBER	PHASE	SOLIDS lb/hr	LIQUID lb/hr	GAS lb/hr	TOTAL lb/hr	gpm	SG	TEMP °F	H_2SO_4 %	SO_2%
108 GROUND ORE	SLURRY	7,200	10,800	–	18,000	27.0	1.34	Ambient	–	–
207 PROCESS WATER (ACID)	LIQUID	–	1,430	–	1,430	2.9	1.0	70	0–10	–
209 2nd THICKENER OVERFLOW	LIQUID	–	17,448	–	17,448	32.2	1.08	118	84	–
210 SPRAY WATER (SOFT)	LIQUID	–	AS REQ.	–	AS REQ.	AS REQ.	1.0	70	–	–
212 SULFURIC ACID – 1st STAGE	LIQUID	–	848	–	848	6.7	1.86	70	93%	–
213 SULFUR DIOXIDE – 1st STAGE	GAS	–	–	2,880	2,880	312 cfm	–	120	–	25–30
214 STEAM INJECTION – 1st STAGE	GAS	–	–	2,365	2,365	–	–	353	–	–
215 1st STAGE "OFF-GAS"	GAS	–	–	2,186	2,186	1,400 cfm	–	170	–	1.1
216 1st STAGE LEACH DISCHARGE	SLURRY	4,673	37,957	–	42,630	71.3	1.20	170	18	–
217 PREG. SOLUTION CLARIFIER UNDERFLOW	SLURRY	23	55	–	78	0.1	1.35	150	18	–
218 FLOCCULANT 1st STAGE THICKENER	LIQUID	–	234	–	234	0.5	1.0	70	–	–
220 1st STAGE THICKENER OVERFLOW	LIQUID	23	31,230	–	31,230	55.8	1.12	157	18	–
224 1st STAGE THICKENER UNDERFLOW	SLURRY	4,673	7,008	–	11,682	18	1.46	157	18	–
226 PROCESS WATER (ACID)	LIQUID	–	2,148	–	2,148	4.3	1.0	70	0–10	–
231 2nd STAGE LEACH DISCHARGE	SLURRY	3,928	21,177	–	25,105	38.2	1.31	178	94	–
232 FLOCCULANT 2nd STAGE THICKENER	LIQUID	–	196	–	196	0.4	1.0	70	–	–
234 2nd STAGE THICKENER UNDERFLOW	SLURRY	3,928	3,928	–	7,855	9.4	1.84	145	94	–
1003 1st STAGE LEACH SUMP	SLURRY	INTERMEDIANT								
1004 2nd AND 3rd STAGE LEACH SUMP	SLURRY	INTERMEDIANT								

EQUIPMENT LIST

ITEM	H.P.	DESCRIPTION
(1)	7.5	TANK 8'9" x 12'H W/AGITATOR
(2)	7.5	TANK 8'9" x 12'H W/AGITATOR
(3)	7.5	TANK 8'9" x 12'H W/AGITATOR
(4)	7.5	TANK 8'9" x 12'H W/AGITATOR
(5)	7.5	TANK 8'9" x 12'H W/AGITATOR
(6)	5	2 1/2" x 2" GAUGHER TRANSFER PUMP
(7)	7.5	TANK 8'9" x 12'H W/AGITATOR
(8)	7.5	TANK 8'9" x 12'H W/AGITATOR
(9)	7.5	TANK 8'9" x 12'H W/AGITATOR
(10)	7.5	TANK 8'9" x 12'H W/AGITATOR
(11)	7.5	TANK 8'9" x 12'H W/AGITATOR
(12)	7.5	TANK 8'9" x 12'H W/AGITATOR
(13)	5	2 1/2" x 2" GAUGHER TRANSFER PUMP
(14)	7.5	TANK 8'9" x 12'H W/AGITATOR
(15)	7.5	TANK 8'9" x 12'H W/AGITATOR
(16)	7.5	TANK 8'9" x 12'H W/AGITATOR
(17)	7.5	TANK 8'9" x 12'H W/AGITATOR
(18)	7.5	TANK 8'9" x 12'H W/AGITATOR
(19)	7.5	TANK 8'9" x 12'H W/AGITATOR
(20)	5	2 1/2" x 2" GAUGHER TRANSFER PUMP
(21)	2	25'9" x 10' EIMCO THICKENER
(22)	5	1 1/2" GAUGHER SUMP PUMP
(23)	5	2" x 1 1/2" GAUGHER TRANSFER PUMP
(24)	AIR	3" x 2" DORR UNDERFLOW PUMP
(27)	AIR	3" x 2" DORR UNDERFLOW PUMP
(28)		22'9" x 10' EIMCO THICKENER
(30)	20	TANK 12'9" x 14' W/AGITATOR
(31)	5	2 1/2" x 2" GAUGHER
(32)		PUMP SUMP BOX (EXISTING)
(33)		PUMP SUMP BOX (EXISTING)
(34)		PUMP SUMP BOX (EXISTING)

THIS DRAWING IS THE PROPERTY OF
HECLA MINING COMPANY
THIS DRAWING IS FURNISHED FOR THE SOLE USE OF THE RECIPIENT AND ACCEPTANCE OF SAME CONSTITUTES AN AGREEMENT THAT IT WILL NOT BE PUBLISHED, REPRODUCED OR GIVEN TO ANY OTHER PARTY WITHOUT OUR PERMISSION UNLESS FURNISHED TO RECIPIENT UNDER CONTRACT PROVISIONS AND SHALL REMAIN THE PROPERTY OF HECLA MINING COMPANY SUBJECT TO RETURN UPON REQUEST.

REVISION

DATE	DESCRIPTION	BY	APP'D	APP'D
△				
△				
△				
△				
△				
△				

REFERENCE
GF-101 GRINDING CIRCUIT
GF-202 SECOND AND THIRD
CIRCUIT FLOW DIAG

DRAWN BY R.A. HORNE
DATE 11/2/89

APEX PROJECT AREA 200

1st STAGE LEACH CIRCUIT
FLOW DIAGRAM

HECLA
MINING COMPANY

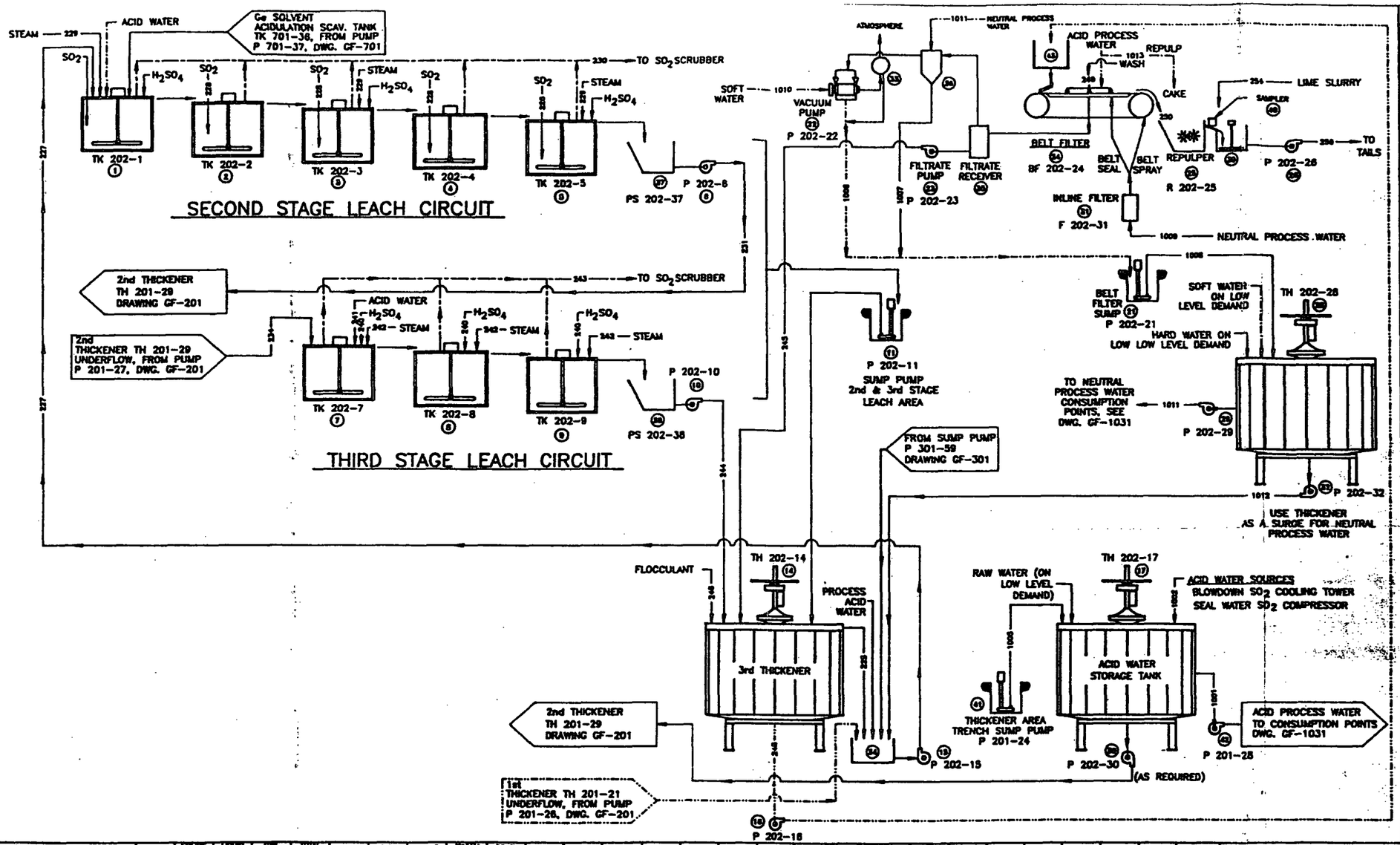

EQUIPMENT LIST

ITEM	H.P.	DESCRIPTION	EQUIP.
1	7.5	TANK 8'ø x 12'H W/AGITATOR	TK 202-
2	7.5	TANK 8'ø x 12'H W/AGITATOR	TK 202-
3	7.5	TANK 8'ø x 12'H W/AGITATOR	TK 202-
4	7.5	TANK 8'ø x 12'H W/AGITATOR	TK 202-
5	7.5	TANK 8'ø x 12'H W/AGITATOR	TK 202-
6	5	2"x1 1/2" GALIGHER TRANSFER PUMP	P 202-
7	7.5	TANK 8'ø x 8'H W/AGITATOR	TK 202-
8	7.5	TANK 8'ø x 8'H W/AGITATOR	TK 202-
9	5	TANK 8'ø x 8'H W/AGITATOR	TK 202-
10	5	2"x1 1/2" GALIGHER TRANSFER PUMP	P 202-
11	5	1 1/2" GALIGHER SUMP PUMP	P 202-
14	2	20'ø x 10' EIMCO THICKENER	TH 202-
15	3	2" x 1 1/2" GALIGHER	P 202-
		OVERFLOW PUMP	
16	AIR	3" x 2" DORR UNDERFLOW PUMP	P 202-
17	1	20'ø x 10' EIMCO THICKENER	TH 202-
21	5	2" DURCO PUMP, SELF PRIME	P 202-
22	35	CL1002 NASH	P 202-
23	2	1-1/2" EIMCO FILTRATE PUMP	P 202-
24	7	9m.2 DELKOR BELT FILTER	BF 202-
25	5	REPULPER	R 202-
26	5	1 1/2" GALIGHER SUMP PUMP	P 202-
28	2	20'ø x 10' EIMCO THICKENER	TH 202-
29	10	3" x 2" GOULDS PUMP	P 202-
30	AIR	3" x 2" DORR UNDERFLOW PUMP	P 202-
31	—	INLINE FILTER	F 202-
32	AIR	3" x 2" DORR UNDERFLOW PUMP	P 202-
33		SEPARATOR (NASH)	S 202-
34		COLLECTION TANK	T 202-
35		FILTRATE RECEIVER	FR 202-
36		SCRUBBER (DELKOR)	SC 202-
37		PUMP SUMP	PS 202-
38		PUMP SUMP	PS 202-
39		SUMP (TAILINGS)	PS 202-
40	115V	SAMPLER	SA 202-
41	5	1 1/2" GALIGHER SUMP PUMP	P 201-
42	3	1 1/2" x 1" GOULDS PUMP	P 201-
		SURGE TANK 3'ø x 3'	TK 202-

STREAM NUMBER	PHASE	SOLIDS lb/hr	LIQUID lb/hr	GAS lb/hr	TOTAL lb/hr	gpm	S.G.	TEMP. °F	H_2SO_4 g/l	SO_2 %
223 3rd THICKENER OVERFLOW	LIQUID	-	10,222	-	10,222	16.6	1.20	110	204	-
227 FEED - 2nd STAGE LEACH	SLURRY	4,673	15,887	-	24,160	38.8	1.32	134	127	-
228 SULFUR DIOXIDE - 2nd STAGE	GAS	-	-	848	848	110 cfm	-	120	-	25-30
229 STEAM - 2nd STAGE	GAS	-	-	512	512	-	-	353	-	-
230 2nd STAGE "OFF-GAS"	GAS	-	-	713	713	380 cfm	-	176	-	1.5
231 2nd STAGE LEACH DISCHARGE	SLURRY	3,828	21,177	-	25,105	36.2	1.31	176	94	-
1001 ACID PROCESS WATER	LIQUID	-	12,800	-	12,800	25.3	1.0	70	0-10	-
234 2nd STAGE THICKENER UNDERFLOW	SLURRY	3,828	3,828	-	7,656	8.4	1.86	146	54	-
1002 ACID PROCESS WATER SOURCES	LIQUID	-	13,645	-	13,645	27.1	1.0	100	0-10	-
1010 VACUUM PUMP SEAL WATER	LIQUID	-	10,000	-	10,000	20	1.0	70	-	-
1011 PROCESS WATER (NEUTRAL)	LIQUID	-	65,800	-	65,800	131.3	1.0	90	-	-
1012 NEUTRAL WATER THICKENER UNDERFLOW	SLURRY	INTERMITTANT						90		
1013 CAKE REPULP WATER	LIQUID	-	4,631	-	4,631	9.3	1.0	70	0-10	-
1005 THICKENER AREA SUMP	SLURRY	INTERMITTANT								
240 SULFURIC ACID 3rd STAGE	LIQUID	-	2,180	-	2,180	2.4	1.88	70	93%	-
241 PROCESS WATER (ACID)	LIQUID	-	330	-	330	0.7	1.0	70	0-10	-
242 STEAM - 3rd STAGE	GAS	-	-	658	658	-	-	353	-	-
243 3rd STAGE - "OFF-GAS"	GAS	-	-	378	378	220 cfm	-	176	-	-
244 3rd STAGE LEACH DISCHARGE	SLURRY	3,828	7,653	-	11,482	14.1	1.83	176	311	-
245 FILTRATE RETURN	LIQUID	-	7,479	-	7,479	13.0	1.12	90	127	-
246 FLOCCULANT 3rd STAGE THICKENER	LIQUID	-	187	-	187	0.4	1.0	70	-	-
248 3rd STAGE THICKENER UNDERFLOW	SLURRY	3,828	4,999	-	8,828	11.2	1.58	140	204	-
249 FILTER WASH	LIQUID	-	3,801	-	3,801	7.8	1.0			
250 FILTER CAKE	SOLID	3,828	1,340	-	5,168	5.4	1.91	100	4.8	-
254 LIME SLURRY	SLURRY	7	63	-	70	0.1	1.06	100	-	-
256 LEACH TAILINGS	SLURRY	3,834	5,991	-	9,836	14.7	1.33	90	PH 7	-
1006 VACUUM PUMP SEAL WATER	LIQUID	-	10,000	-	10,000	20	1.0	90	-	-
1007 VACUUM SYSTEM SCRUB WATER	LIQUID	-	15,500	-	15,500	31	1.0	90	-	-
1008 RECYCLE PROCESS WATER	LIQUID	-	54,328	-	54,328	108.7	1.0	90	-	-
1009 BELT SEAL/SPRAY WATER	LIQUID	-	17,800	-	17,800	35.2	1.0	90	-	-

THIS DRAWING IS THE PROPERTY OF
HECLA MINING COMPANY
THIS DRAWING IS PROVIDED FOR THE SOLE USE OF THE RECIPIENT AND ACCEPTANCE OF THIS CONSTITUTES AN AGREEMENT THAT IT WILL NOT BE PUBLISHED, REPRODUCED OR SHOWN TO ANY OTHER PARTY WITHOUT OUR PERMISSION UNLESS PROVIDED TO RECIPIENT UNDER CONTRACT PROVISIONS AND SHALL REMAIN THE PROPERTY OF HECLA MINING COMPANY SUBJECT TO RETURN UPON REQUEST.

REVISIONS	DATE	DESCRIPTION	BY	APPD	APPD

REFERENCE:
GF-201 FIRST STAGE LEACH CIRCUIT FLOW DIAGRAM
GF-301 Cu SOLVENT EXTRACTION CIRCUIT FLOW DIAGRAM

DRAWN BY R.A. HORNE
DATE 11/2/89

APEX PROJECT AREA 200

2nd & 3rd STAGE LEACH CIRCUIT FLOW DIAGRAM

HECLA MINING COMPANY

DRAWING NO. GF-20

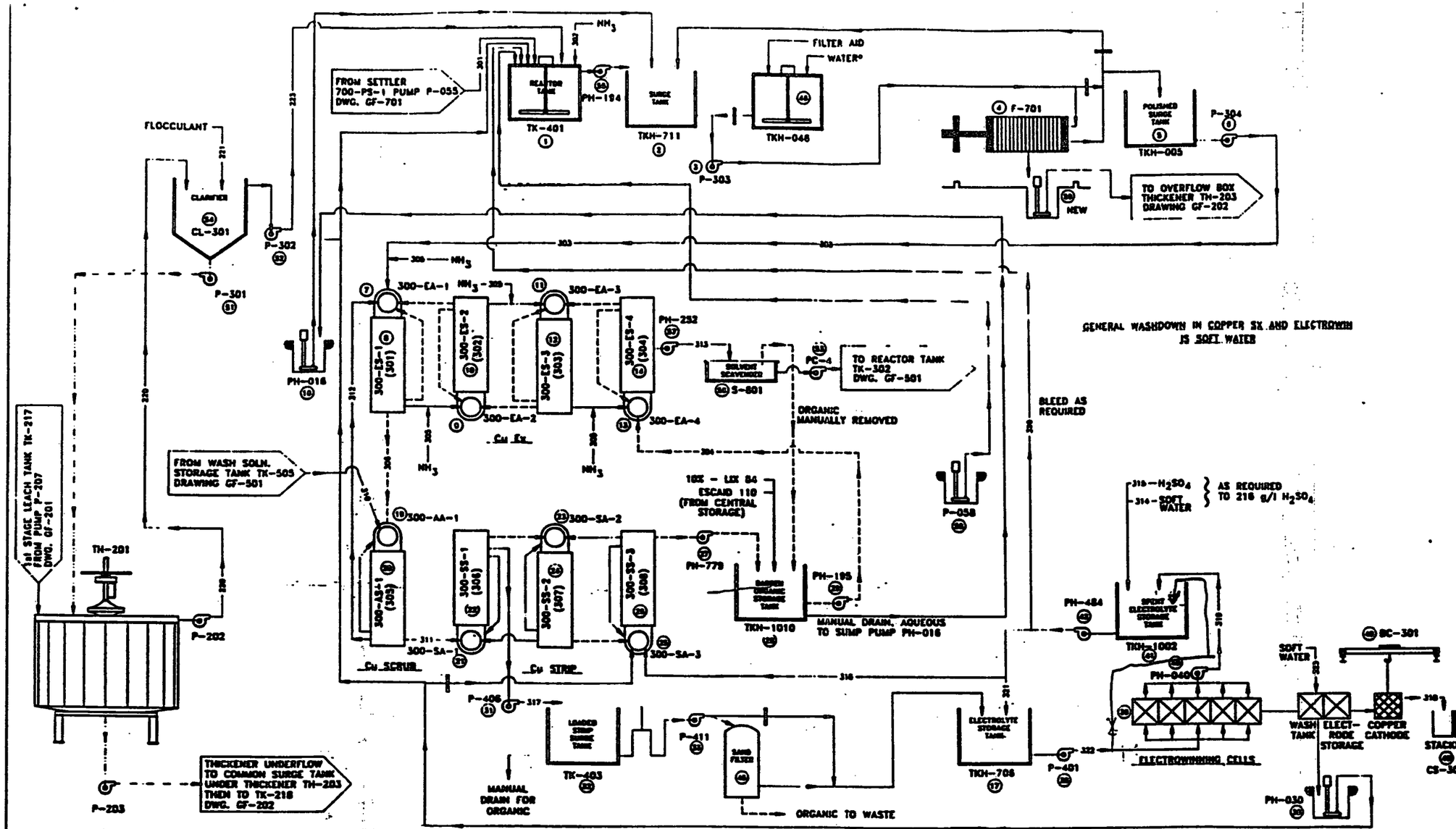

STREAM NUMBER	PHASE	SOLIDS	LIQUID	GAS	TOTAL	gpm	S.G.	H_2SO_4	TEMP. °F	SO_2
220 1st STAGE THICKENER OVERFLOW	LIQUID	23	31,236	-	31,259	34.9	1.12	157	16	
221 FLOCCULANT - CLARIFIER	LIQUID	-	-	-	-	-	1.0	70	-	
223 PREGNANT SOLUTION	LIQUID	-	31,181	-	31,181	35.8	1.12	120	16	
301 Aq. SOLUTION - Cu SOLUTION PUMP.	LIQUID	-	252	-	252	0.5	1.00	80	<5	
302 AMMONIA FOR ACID SOL.	LIQUID	-	88	-	88	0.2	1.0	-	-	
303 FEED TO COPPER SOLVENT EXTRACTION	LIQUID	-	31,541	-	31,541	34.3	1.12	100	1.5	
304 BARREN COPPER SOLVENT	LIQUID	-	20,358	-	20,358	47.6	0.85	90	3.8	
305 AMMONIA FOR STABILIZATION	LIQUID	-	403	-	403	0.8	1.0	-	-	
306 LOADED COPPER SOLVENT	LIQUID	-	20,345	-	20,345	47.6	0.85	90	0.4	
310 SOLUTION TO COPPER WASH	LIQUID	-	1,190	-	1,190	2.4	1.0	70	pH 2	
311 WASHED LOADED SOLVENT	LIQUID	-	20,345	-	20,345	47.6	0.85	90	0.3	
312 WASH PRODUCT SOLUTION	LIQUID	-	1,190	-	1,190	2.4	1.0	90	2.4	
313 COPPER RAFFINATE	LIQUID	-	33,134	-	33,134	58.2	1.12	90	5.5	
314 WATER TO STRIP MAKE-UP	LIQUID	-	17	-	17	0.03	1.0	70	-	
315 ACID TO STRIP MAKE-UP	LIQUID	-	5	-	5	0.01	1.84	70	535	
316 BARREN STRIP SOLUTION	LIQUID	-	2,390	-	2,390	4.2	1.1	70	216	
317 PREGNANT STRIP SOLUTION	LIQUID	-	2,395	-	2,395	4.2	1.15	70	146	
318 CATHODE COPPER	LIQUID	83	-	-	83	-	-	-	-	
319 SPENT ELECTROLYTE	LIQUID	-	35,700	-	35,700	65	1.10	90	196	
320 ELECTROLYTE BLEED	LIQUID	-	23	-	23	0.03	1.10	90	216	
321 SPENT RECIRCULATION	LIQUID	-	33,400	-	33,400	60.8	1.10	90	216	
322 FEED TO CELLS	LIQUID	-	35,700	-	35,700	65	1.10	85	211	
323 CATHODE WASH	LIQUID	-	250	-	250	0.5	1.0	70	10	

EQUIPMENT LIST

ITEM	H.P.	DESCRIPTION	REM
1	5	TANK 6'D x 6'H W/AGITATOR-RL	TK-40
2		TANK 8'D x 8'H - FRP	TKH-7
3	25	2 1/2" x 2" GALIGNER	P-30
		PREG. SOLN. PUMP	
4	7.5	50 FT² SHRIVER PAF FILTER	F-701
5	-	TANK 10'D x 12' FRP	TKH-0
6	5	3" x 1" DURCO PUMP	P-304
7	3	54"D x 48" Cu Ex AGITATOR	300-E
8		6' x 18' Cu Ex SETTLER	300-E
9	3	54"D x 48" Cu Ex AGITATOR	300-E
10		6' x 18' Cu Ex SETTLER	300-E
11	3	54"D x 48" Cu Ex AGITATOR	300-E
12		6' x 18' Cu Ex SETTLER	300-E
13	3	54"D x 48" Cu Ex AGITATOR	300-E
14		6' x 18' Cu Ex SETTLER	300-E
15	5	2" FYBROC SUMP PUMP	PH-0
16			
17		TANK 8'D x 8'H (ACTUAL) W/2" FALSE BOTTOM	TKH-7
18	3	42"D x 48" Cu SCRUB AGITATOR	300-
19		5' x 18' Cu SCRUB SETTLER	300-
20	3	54"D x 88 1/4" Cu STRIP AGITATOR	300-
21		5' x 18' Cu STRIP SETTLER	300-
22	3	54"D x 88 1/4" Cu STRIP AGITATOR	300-
23		5' x 18' Cu STRIP SETTLER	300-
24	3	54"D x 88 1/4" Cu STRIP AGITATOR	300-
25		5' x 18' Cu STRIP SETTLER	300-
26	1	1 1/2" x 1" GOULDS PUMP	PH-
27		TANK 10'D x 12'H -FRP	TKH-
28	1	1 1/2" x 1" GOULDS PUMP	PH-
29			
30	5	2" FYBROC	PH-
		STRIP AREA SUMP PUMP	
31	1	1 1/2" x 1" DURCO	P-4
32		TANK 6'D x 6'H - FRP	TK-
33	1	1 1/2" x 1" DURCO	P-4
34			
35	5	1 1/2" x 1" DURCO	P-4
36		(5 EA.) ELECTROWINNING CELLS	EC-
		(1 EA.) CATHODE WASH CELL	CW
		(1 EA.) ELECTRODE STORAGE CELL	ES-
37	5	2" FYBROC	PH-
38		TANK 8'D x 7'H -FRP	TKH
39	1	1 1/2" x 1" GOULDS	PH-
40	-	SAND FILTER (SEE DWG. MM-310)	MF
41	1/2	TANK 3'D x 4' - FRP	TKH-
42			
43	1/2-1/2	BRIDGE CRANE	BC-
44		CATHODE STACKER	CS-
45	AIR	1" x 1" DEPA PUMP	P-
46	5	2" x 1" DURCO	P-
47	5	1 1/2" GALIGNER	PC-
48	1	CLARIFIER	CL-
49	1	1 1/2" x 1" GOULDS	PH
50	1	4'W x 7'W x 30'L	S-
		SOLVENT SCAVENGER	
51	1	1 1/2" x 1" GOULDS	PH
52	5	1 1/2" GALIGNER SUMP PUMP	NE
53	5	1 1/2" GALIGNER SUMP PUMP	NE

THIS DRAWING IS THE PROPERTY OF
HECLA MINING COMPANY
THIS DRAWING IS FURNISHED FOR THE SOLE USE OF THE RECIPIENT AND ACCEPTANCE OF SAME CONSTITUTES AN AGREEMENT THAT IT WILL NOT BE PUBLISHED, REPRODUCED OR GIVEN TO ANY OTHER PARTY WITHOUT OUR PERMISSION UNLESS FURNISHED TO RECIPIENT UNDER CONTRACT PROVIDING AND SHALL REMAIN THE PROPERTY OF HECLA MINING COMPANY SUBJECT TO RETURN UPON REQUEST.

REFERENCE	DWG.
	GF-201 FIRST STAGE LEACH FLOW DIAGRAM
	GF-202 2nd AND 3rd STAG CIRCUIT FLOW DIAG
	GF-501 GALLIUM Sx FLOW
	GF-701 GERMANIUM Sx FLO
	MM-310 SAND FILTERS

DRAWN BY R.A. HORNE
9/18/89

APEX PROJECT AREA 300

Cu SOLVENT EXTRACTION CIRCUIT FLOW DIAGRAM

HECLA

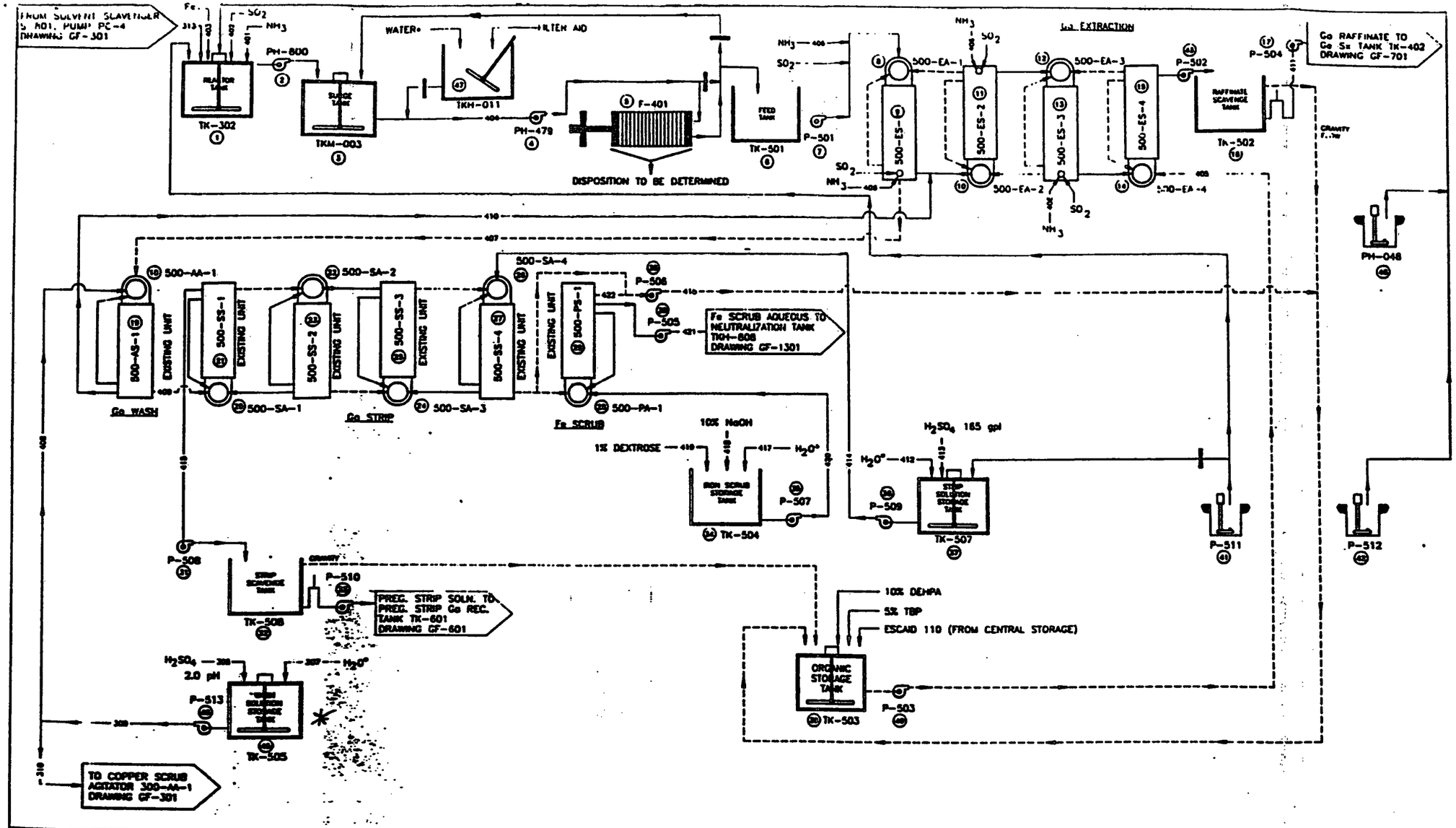

STREAM NUMBER	Phase	SOLIDS Volume	LIQUID Volume	GAS Volume	TOTAL Volume	GPM	SG	TEMP °F	H_2SO_4 g/l	SO_2 %
313 COPPER RAFFINATE	LIQUID	–	33,134	–	33,134	58.2	1.12	80	3.9	
401 AMMONIA FOR ACID KILL	LIQUID	–	99	–	99	0.1	1.0	–		
402 SULFUR DIOXIDE – REDUCTION	GAS	–		–	84	7.8 SCFM	–	–		100%
403 POWDERED IRON – REDUCTION	SOLID	———	———	AS NEEDED	———	———	———	———	———	———
404 FEED TO SMALM SX	LIQUID	–	33,183	–	33,183	58.3	1.12	80	4.0	
405 BARREN ORGANIC	LIQUID	–	7,770	–	7,770	18.3	0.85	70	3.3	
406 AMMONIA FOR STABILIZATION	LIQUID	–	19	–	19	0.02	1.0	–	–	
407 LOADED ORGANIC	LIQUID	–	7,794	–	7,794	18.3	0.85	80	0.06	
408 ORGANIC WASH SOLUTION	LIQUID	–	380	–	380	0.8	1.0	70	PH 2	
409 WASHED LOADED SOLVENT	LIQUID	–	7,794	–	7,794	18.3	0.85	80	0.06	
410 WASH PRODUCT SOLN.	LIQUID	–	380	–	380	0.8	1.0	80	PH 2	
411 GALLIUM RAFFINATE	LIQUID	–	33,872	–	33,872	80.0	1.12	80	4.0	
412 WATER TO STRIP MAKE – UP	LIQUID	–	905	–	905	1.0	1.0	70	–	
413 ACID TO STRIP MAKE – UP	LIQUID	–	97	–	97	0.1	1.86	70	638	
414 BARREN STRIP SOLN.	LIQUID	–	802	–	802	1.1	1.16	80	165	
415 PREG. STRIP SOLN.	LIQUID	–	802	–	802	1.1	1.16	80	74	
416 STRIPPED Ga SOLVENT	LIQUID	–	7,794	–	7,794	18.3	0.85	80	4.0	
417 WATER TO SCRUB MAKE – UP	LIQUID	–	203	–	203	0.4	1.0	70	–	
418 NaOH TO SCRUB MAKE – UP	LIQUID	–	51	–	51	0.1	1.53	70	–	
419 DEXTROSE	SOLID	–	–	–	–				–	
420 BARREN SCRUB SOLN.	LIQUID	–	257	–	257	0.5	1.16	70	–	
421 PREG. SCRUB SOLN.	LIQUID	–	257	–	257	0.5	1.16	70	–	
422 SCRUBBED Ga SOLVENT	LIQUID	–	2,572	–	2,572	6.0	0.85	70	–	
307 WATER TO WASH MAKE – UP	LIQUID	–	1,578	–	1,578	3.1	1.0	70	–	
308 ACID TO WASH MAKE – UP	LIQUID	–	3.4	–	3.4	0.004	1.86	70	–	
309 Cu & Ga WASH SOLN	LIQUID	–	1,580	–	1,580	3.2	1.0	70	–	
310 Cu WASH SOLUTION	LIQUID	–	1,180	–	1190	2.4	1.0	70	–	

EQUIPMENT LIST

ITEM	H.P.	DESCRIPTION
(1)	1	TANK 5'Ø x 5' –RL W/ AGITATOR REACTOR
(2)	5	1 1/2" x 1" DURCO PUMP
(3)	2.0	TANK 8'Ø x 6'H – FRP
		SURGE TANK WITH AGITATOR
(4)	7.5	1 1/2" x 1" GOULDS PUMP
(5)	7.5	P&F FILTER 50 Cu Ft SHRIVER
(6)		TANK 12'Ø x 12'– FRP STORAGE
(7)	1	1 1/2" x 1" DURCO PUMP
(8)	3	Ga EX AGITATOR 475 GAL– NEW
(9)		Ga EX SETTLER NATURITA
(10)	3	Ga EX AGITATOR 475 GAL– NEW
(11)		Ga EX SETTLER NATURITA
(12)	3	Ga EX AGITATOR 475 GAL– NEW
(13)		Ga EX SETTLER NATURITA
(14)	3	Ga EX AGITATOR 475 GAL– NEW
(15)		Ga EX SETTLER NATURITA
(16)		TANK 7'Ø x 8'–FRP SCAVENGE
(17)	1	1 1/2" x 1" DURCO PUMP
		– APEX EQUIPMENT –
(18)	2	Ga WASH AGITATOR 190 GAL
(19)		Ga WASH SETTLER 37 FT³
(20)	2	Ga STRIP AGITATOR 190 GAL
(21)		Ga STRIP SETTLER 42 FT³
(22)	2	Ga STRIP AGITATOR 190 GAL
(23)		Ga STRIP SETTLER 42 FT³
(24)	2	Ga STRIP AGITATOR 190 GAL
(25)		Ga STRIP SETTLER 42 FT³
(26)	2	Ga STRIP AGITATOR 190 GAL
(27)		Ga STRIP SETTLER 42 FT³
		– – – – – –
(28)	2	Ga IRON SCRUB AGITATOR 190 GAL – APEX
(29)		Ga IRON SCRUB SETTLER 42 FT³ – APEX
(30)	1	1 1/2" x 1" DURCO PUMP
(31)	1	1 1/2" x 1" DURCO PUMP
(32)		TANK 5'Ø x 6'–FRP SCAVENGE
(33)	1	1 1/2" x 1" DURCO PUMP
(34)	3	TANK 5'Ø x 5'–RL SCRUB SOLUTION STORAGE
(35)	1	1 1/2" x 1" DURCO PUMP
(36)	1	1 1/2" x 1" DURCO PUMP
(37)	7	TANK 6'Ø x 6' STRIP SOLN. STOR.
(38)	1	1 1/2" x 1" DURCO PUMP
(39)	3	TANK 6'Ø x 6'H –FRP GAL. STOR.
(40)	1	1 1/2" x 1" DURCO PUMP
(41)	5	1 1/2" GAUGHER SUMP PUMP
(42)	5	1 1/2" GAUGHER SUMP PUMP
(43)	1	1 1/2" x 1" DURCO PUMP
(44)	3	TANK 6'Ø x 6'H W/AGITATOR
(45)	1	1 1/2" x 1" DURCO PUMP
(47)	1/2	TANK 6'Ø x 5' FG W/AGITATOR
(48)	5	2" FYBROC SUMP PUMP

THIS DRAWING IS THE PROPERTY OF
HECLA MINING COMPANY
THIS DRAWING IS FURNISHED FOR THE SOLE USE OF THE RECIPIENT AND ACCEPTANCE OF THIS CONSTITUTES AN AGREEMENT THAT IT WILL NOT BE PUBLISHED, REPRODUCED OR GIVEN TO ANY OTHER PARTY WITHOUT OUR PERMISSION UNLESS FURNISHED TO RECIPIENT UNDER CONTRACT PROVISIONS AND SHALL REMAIN THE PROPERTY OF HECLA MINING COMPANY SUBJECT TO RETURN UPON REQUEST.

REVISIONS	DATE	DESCRIPTION	BY	APPD	APPD
A					
B					
C					
D					
E					

REFERENCE DRAWINGS
GF-301 COPPER Sx FLOW
GF-601 GALLIUM AND PREG REFINING
GF-701 GERMANIUM Sx FLO
GF-1301 NEUTRALIZATION S

DRAWN BY R.A. HORNE
DATE 9/18/89

APEX PROJECT AREA 500

Ga SOLVENT EXTRACTION CIRCUIT FLOW DIAGRAM

HECLA

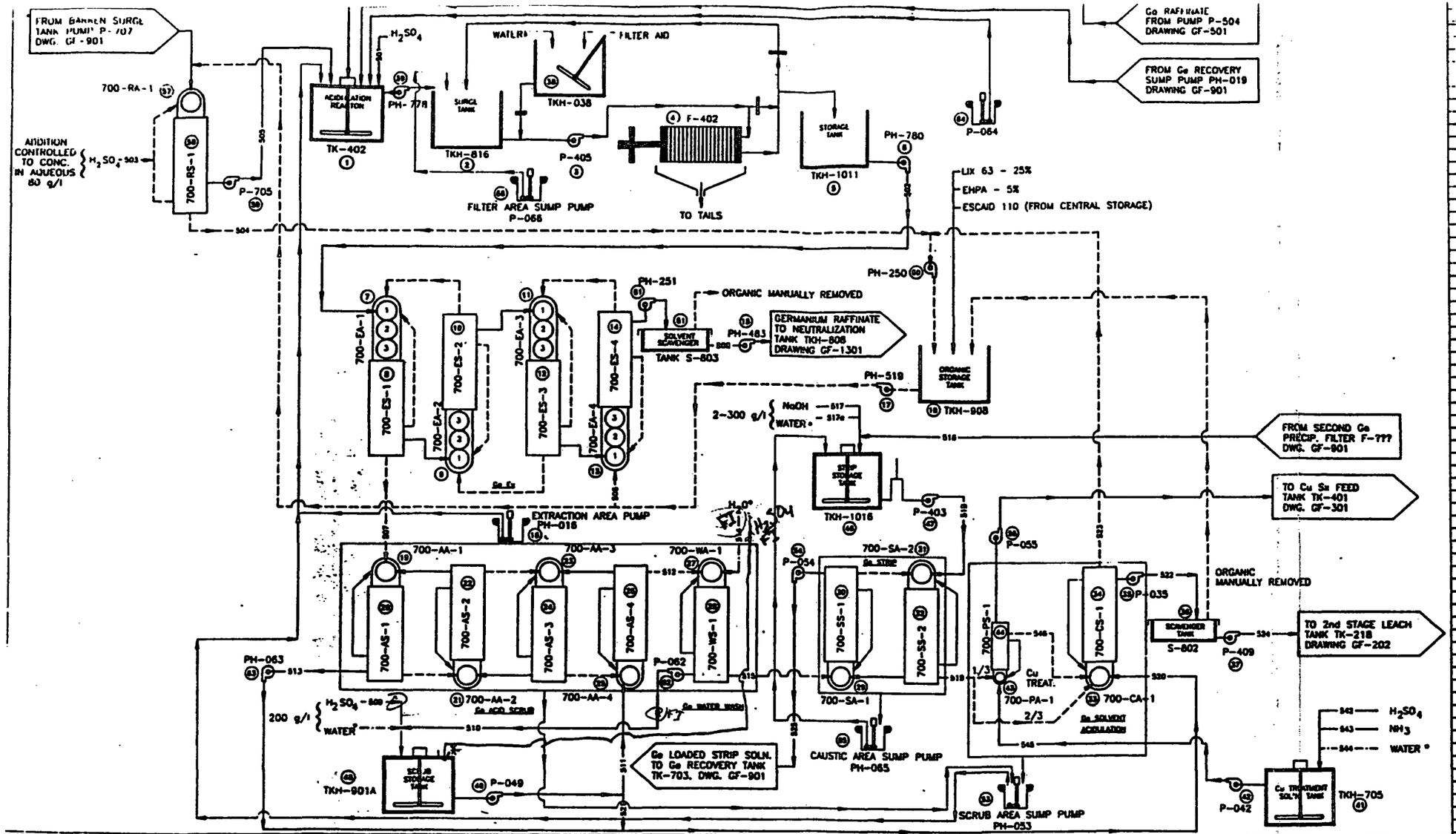

STREAM NUMBER	Phase	SOLIDS lb/hr	LIQUID lb/hr	GAS lb/hr	TOTAL lb/hr	GPM	SG	TEMP °F	H_2SO_4 g/l
501 GALLIUM RAFFINATE	LIQUID	-	33,572	-	33,572	60.0	1.12	80	4.6
501 SULFURIC ACID	ACID	-	2,323	-	2,323	2.8	1.86	70	935
502 GERMANIUM Sn FEED	LIQUID	-	34,855	-	34,855	63.7	1.16	80	84
503 ACID TO ORGANIC RECOVERY	LIQUID	-	139	-	139	0.3	1.86	70	935
504 RECOVERED ORGANIC	LIQUID	-	183	-	183	0.4	0.85	80	245
505 RECOVERY AQUEOUS	LIQUID	-	880	-	880	1	1.30	80	126
506 BARREN SOLVENT	LIQUID	-	8,147	-	8,147	19.2	0.85	70	20
507 LOADED ORGANIC	LIQUID	-	8,147	-	8,147	19.2	0.85	80	11
508 Ge Sn RAFFINATE	LIQUID	-	34,080	-	34,080	61.7	1.17	80	85
509 SULFURIC ACID TO SCRUB. SOLN.	LIQUID	-	446	-	446	0.5	1.86	70	935
510 SPENT WATER SCRUB	LIQUID	-	1,222	-	1,222	2.4	1.0	80	-
511 SOLUTION TO ACID SCRUB	LIQUID	-	1,515	-	1,515	2.7	1.12	70	202
512 ACID SCRUBBED SOLVENT	LIQUID	-	8,147	-	8,147	19.2	0.85	80	11
513 ACID SCRUB PRODUCT	LIQUID	-	1,515	-	1,515	2.7	1.12	80	201
514 WATER TO SOLVENT WASH	LIQUID	-	1,222	-	1,222	2.4	1.0	70	-
515 WATER WASHED SOLVENT	LIQUID	-	8,147	-	8,147	19.2	0.85	80	11
516 2nd PRECIPITATE FILTRATE	LIQUID	-	434	-	434	0.8	1.06	80	-
517 NaOH TO STRIP SOLUTION	LIQUID	-	289	-	289	0.4	1.53	70	-
517a WATER TO STRIP SOLUTION	LIQUID	-	72	-	72	0.1	1.0	70	-
518 STRIP SOLUTION	LIQUID	-	785	-	785	1.3	1.18	70	-
519 STRIPPED SOLVENT	LIQUID	-	7,984	-	7,984	19	0.85	80	-
520 AQUEOUS TO ACIDULATION	LIQUID	-	2,324	-	2,324	4.3	1.12	80	201
521 ACIDSCRUB SOLUTION TO ACID	LIQUID	-	808	-	808	1.5	1.12	80	202
522 ACIDULATION AQUEOUS	LIQUID	-	2,324	-	2,324	4.3	1.12	80	158
523 ACIDULATED SOLVENT	LIQUID	-	7,984	-	7,984	19	0.85	80	15
524 SCAVENGER AQUEOUS TO LEACH	LIQUID	-	2,324	-	2,324	4.3	1.12	80	158
525 PRODUCT STRIP SOLUTION	LIQUID	-	797	-	797	1.4	1.18	80	-
542 H_2SO_4 TO PURF. SOLUTION	LIQUID	-	34.2	-	34.2	0.04	1.84	70	935
543 NH_3 TO PURF. SOLUTION	LIQUID	-	34.2	-	34.2	0.07	1.0	70	-
544 WATER TO PURF. SOLUTION	LIQUID	-	195	-	195	0.4	1.0	70	-
545 COPPER PURIFYING SOLUTION	LIQUID	-	282	-	282	0.5	1.05	70	-
546 ORGANIC FROM PURIFICATION	LIQUID	-	2,974	-	2,974	7.0	0.85	70	-

ITEM	H.P.	DESCRIPTION	EQUIP.
1	3	TANK 6'Ø x 6'H W/AGITATION	TK-4
2		TANK 10'Ø x 12'H FRP	TKH-8
3	AIR	2" x 2" DEPA	P-405
		FILTER PRESS FEED PUMP	
4	7.5	50 FT³ SHRIVEN P&F FILTER	F-402
5		TANK 10'Ø x 12'H FRP	TKH-10
6	1 1/2	1 1/2" x 1" GOULDS PUMP	PH-78
7	3 ea.	(3 EA) 375 GAL. MIXER	700-E
8		108 FT³ SETTLER	700-E
9	3 ea.	(3 EA) 375 GAL. MIXER	700-E
10		108 FT³ SETTLER	700-E
11	3 ea.	(3 EA) 375 GAL. MIXER	700-E
12		108 FT³ SETTLER	700-E
13	3 ea.	(3 EA) 375 GAL. MIXER	700-E
14		108 FT³ SETTLER	700-E
15	3	1 1/2" x 1" GOULDS PUMP	PH-48
16	5	2" FYBROC SUMP PUMP	PH-01
17	1	1 1/2" x 1" GOULDS PUMP	PH-51
18		TANK 10'Ø x 12'H FRP	TKH-9
19	3	Ge ACID SCRUB MIXER (475 GAL)	700-A
20		Ge ACID SCRUB SETTLER (30 FT³)	700-A
21	3	Ge ACID SCRUB MIXER (475 GAL)	700-A
22		Ge ACID SCRUB SETTLER (30 FT³)	700-A
23	3	Ge ACID SCRUB MIXER (475 GAL)	700-A
24		Ge ACID SCRUB SETTLER (30 FT³)	700-A
25	3	Ge ACID SCRUB MIXER (475 GAL)	700-A
26		Ge ACID SCRUB SETTLER (30 FT³)	700-A
27	3	Ge WATER WASH MIXER (475 GAL)	700-W
28		Ge WATER WASH SETTLER (40 FT³)	700-W
29	3	Ge STRIP MIXER (215 GAL)	700-S
30		Ge STRIP SETTLER (40 FT³)	700-S
31	3	Ge STRIP MIXER (215 GAL)	700-S
32		Ge STRIP SETTLER (43 FT³)	700-S
33	3	36"Ø x 32" Ge SOLVENT	700-C
		ACIDULATION MIXER	
34		3' x 13'-0" Ge SOLVENT	700-C
		ACIDULATION SETTLER	
35	1/2	1.5" x 1.5" COLE-PALMER PUMP	P-03
36		TANK 4'H x 7'W x 15'L NATURITA	S-802
		ACIDULATION SCAVENGER TANK	
37	AIR	DEPA PUMP	P-405
38	1/2	TANK 3'Ø x 4" FG	TKH-0
39	1	1" GOULDS PUMP	PH-77
40	2	TANK 8'Ø x 12'H W/AGITATOR	TKH-7
41	1/2	1.5" x 1.5" COLE-PALMER PUMP	P-042
42	1	24"Ø x 36" Cu TREAT. MIXER	700-P
43		3' x 7'-6" Cu TREAT. SETTLER	700-P
44	3	TANK 8'Ø x 8'H W/AGITATOR	TKH-1
45	AIR	DEPA PUMP	P-403
46	5	TANK 10'Ø x 10'HIGH W/AGITATOR	TKH-9
47	1/2	1.5" x 1.5" COLE-PALMER PUMP	P-049
48		TANK 4'H x 7'W x 30'L NATURITA	S-803
		SOLVENT SCAVENGER TANK	
49	5	2" FYBROC PUMP	PH-05
50	1/2	1.5" x 1.5" COLE-PALMER PUMP	P-054
51	1/2	1.5" x 1.5" COLE-PALMER PUMP	P-035
52	3	ACIDULATION REACTOR	700-F
53		ACIDULATION SETTLER (60 FT³)	700-F
54	AIR	1 1/2" DEPA PUMP	P-70
55	1	1 1/2" x 1" GOULDS PUMP	PH-2
56	1	1 1/2" x 1" GOULDS PUMP	PH-2
57	1/2	1.5" x 1.5" COLE-PALMER PUMP	P-06
58	1/2	1 1/2" x 1" DURCO PUMP	P-06
59	5	1 1/2" GALIGHER SUMP PUMP	P-06
60	5	1 1/2" GALIGHER SUMP PUMP	P-06
61	5	1 1/2" GALIGHER SUMP PUMP	P-06

THIS DRAWING IS THE PROPERTY OF
HECLA MINING COMPANY
THIS DRAWING IS FURNISHED FOR THE SOLE USE OF THE RECIPIENT AND ACCEPTANCE OF SAME CONSTITUTES AN AGREEMENT THAT IT WILL NOT BE PUBLISHED, REPRODUCED OR SHOWN TO ANY OTHER PARTY WITHOUT OUR PERMISSION UNLESS FURNISHED TO RECIPIENT UNDER CONTRACT PROVISIONS AND SHALL REMAIN THE PROPERTY OF HECLA MINING COMPANY SUBJECT TO RETURN UPON REQUEST.

DATE	DESCRIPTION	BY	APPD	APPD
REVISIONS				

REFERENCE
GF-202 LEACH CIRCUIT 2nd & 3r FLOW DIAGRAM
GF-301 Cu Sn & ELECTROWINNING FLOW DIAGRAM
GF-901 GERMANIUM RECOVERY FLOW DIAGRAM

DRAWN BY R.A. HORNE
DATE 9/25/89

APEX PROJECT AREA 700

GERMANIUM SOLVENT EXTRACTION FLOW DIAGRAM

HECLA MINING COMPANY

REVISION NO.
DRAWING NO. GF-7

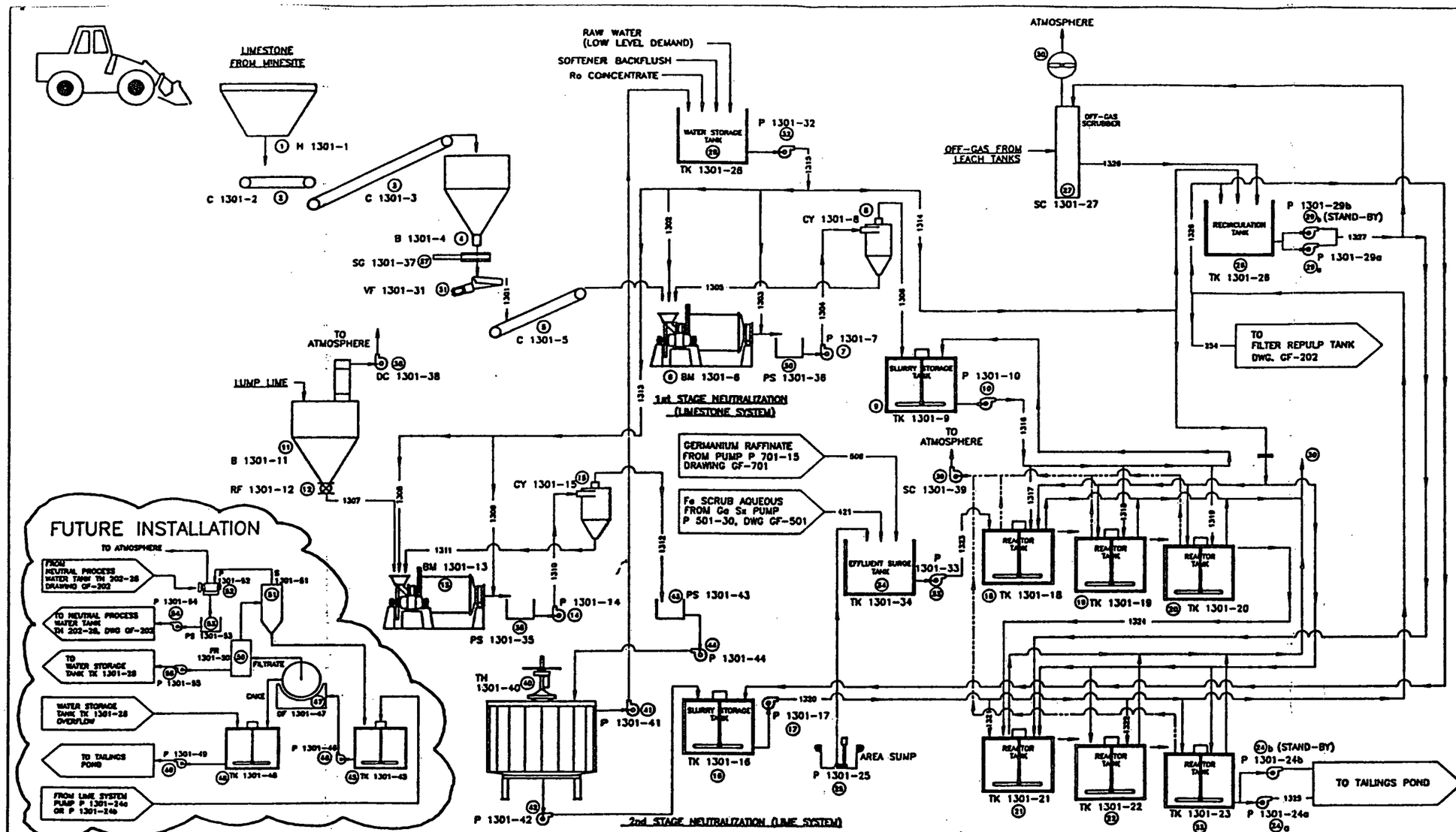

STREAM NUMBER	PHASE	SOLIDS LBS/HR	LIQUID LBS/HR	GAS LBS/HR	TOTAL LBS/HR	GPM	SG/% SOLIDS	TEMP °F	H_2SO_4 g/l
1301 LIMESTONE FEED	SOLID	8,400	538	–	8,938	–	2.7	70	–
1302 GRIND WATER	LIQUID	–	3,064	–	3,064	6.1	1.0	70	–
1303 DILUTION WATER	LIQUID	–	21,800	–	21,800	43.2	1.0	70	–
1304 CYCLONE FEED	SLURRY	25,200	32,400	–	57,600	63.5	1.38/44	70	–
1305 CYCLONE UNDERFLOW	SLURRY	16,800	7,200	–	24,000	26.8	1.79/70	70	–
1306 CYCLONE OVERFLOW	SLURRY	8,400	25,200	–	33,600	36.8	1.19/25	70	–
1307 LIME FEED	SOLID	3,800	–	–	3,800	–	2.3	70	–
1308 GRIND WATER	LIQUID	–	14,400	–	14,400	30.2	1.0	70	–
1309 DILUTION WATER	LIQUID	–	18,000	–	18,000	37.8	1.0	70	–
1310 CYCLONE FEED	SLURRY	5,400	34,200	–	39,600	72	1.06/13.0	<150	–
1311 CYCLONE UNDERFLOW	SLURRY	1,800	1,800	–	3,600	5	1.30/30.0	<150	–
1312 CYCLONE OVERFLOW	SLURRY	3,600	32,400	–	36,000	68	1.06/10.0	<150	–
1313 TOTAL WATER TO SLAKING	LIQUID	–	32,400	–	32,400	68	1.0	70	–
1314 WATER TO SPRAYS & SCRUBBER	LIQUID	———	45 REQ'D	———	———	———	–	–	–
1315 TOTAL WATER TO NEUTRALIZATION	LIQUID	–	57,600	–	57,600	115	1.0	70	–
1316 LIMESTONE SLURRY DISTR.	SLURRY	6,800	19,600	–	26,400	44.5	1.19/25	70	–
1317 LIMESTONE TO 1ST REAC.	SLURRY	1,470	4,410	–	5,880	9.9	1.19/25	70	–
1318 LIMESTONE TO 2nd REAC.	SLURRY	1,465	4,395	–	5,860	9.9	1.19/25	70	–
1319 LIMESTONE TO 3rd REAC.	SLURRY	1,465	4,395	–	5,860	9.9	1.19/25	70	–
1320 LIME DISTRIBUTION DISTR.	SLURRY	5,400	48,600	–	54,000	90.8	1.06/10	100	–
1321 LIME TO 4th REAC.	SLURRY	2,968	26,890	–	29,876	50.1	1.06/10	100	–
1322 LIME TO 5th REAC.	SLURRY	331	2,979	–	3,310	5.1	1.06/10	100	–
1323 EFFLUENT TO NEUTRALIZATION	LIQUID	–	38,333	–	38,333	62.1	1.17	80	86.4
1324 DISCHG FROM LIMESTONE NEUT.	SLURRY	9,938	42,077	–	52,015	80.8	1.28	90	–
1325 DISCHARGE TO POND	SLURRY	13,531	74,612	–	87,843	151.8	1.18	100	–
1326 LIME TO SCRUBBER	SLURRY	274	2,466	–	2,740	5.1	1.06/10	100	–
1327 SCRUBBER RECIRCULATION	SLURRY	8,598	77,364	–	85,960	160	1.06/10	100	–
1328 SCRUBBER SUMP	SLURRY	8,870	79,830	–	88,700	165.1	1.06/10	100	–
1329 SCRUBBER EMISSION	GAS	–	–	–	–	2,000 acfm	–	100	–
1330 REAC. TANK EMISSION	GAS	–	–	1,934	1,934	280 acfm	–	130	–
1331 SCRUBBER BLEED	SLURRY	274	2,466	–	2,740	5.1	1.06/10	100	–
234 LIME TO LEACH RESIDUE	SLURRY	7	63	–	70	0.1	1.06/10	100	–

STREAM NUMBER	PHASE	SOLIDS LBS/HR	LIQUID LBS/HR	GAS LBS/HR	TOTAL LBS/HR	GPM	SG	TEMP °F	H_2SO_4 g/l
508 Ge Sx RAFFINATE	LIQUID	–	38,095	–	38,095	81.7	1.17	80	83
421 PREG SCRUB SOLUTION	LIQUID	–	357	–	357	0.5	1.10	70	–

EQUIPMENT LIST

ITEM	H.P.	DESCRIPTION	EQU
(1)		3 YD³ FEED HOPPER	H 1
(2)	3	24" x 8' BELT FEEDER	C 13
(3)	5	18" x 84'L, BELT CONVEYOR	C 13
(4)		230 TON LIMESTONE STORAGE BIN	B 13
(5)		18" x 28'L, BELT CONVEYOR	C 130
(6)	50	5'ø x 5'H EIMCO BALL MILL	BM 1
(7)	10	1 1/2" GALIGHER PUMP	P 130
(8)		3" KREBS HYDROCYCLONE	CY 1
(9)	5	TANK 8'ø x 8'H R.L.	TK 13
		SLURRY STORAGE	
(10)	5	1 1/2" GALIGHER PUMP	P 130
(11)		200 TON LUMP LIME STORAGE BIN	B 130
(12)	2	8'ø ROTARY FEEDER	RF 13
(13)	10	30"ø x 36" DENVER BALL MILL	BM 1
(14)	10	1 1/2" GALIGHER PUMP	P 130
(15)		3" KREBS HYDROCYCLONE	CY 13
(16)	5	TANK 8'ø x 8'H MS W/AGITATOR	TK 13
		SLURRY STORAGE	
(17)	10	1 1/2" GALIGHER PUMP	P 130
(18)	3	12'ø x 15'H REACTOR W/AGITATOR	TK 13
(19)	2	10'ø x 10'H FRP REACTOR	TK 13
		WITH AGITATOR	
(20)	2	10'ø x 10'H FRP REACTOR	TK 13
		WITH AGITATOR	
(21)	2	8'ø x 12'H REACTOR W/AGITATOR	TK 13
		3" FALSE BOTTOM	
(22)	2	8'ø x 8'H FRP REACTOR	TK 13
(23)	2	8'ø x 8'H FRP REACTOR	TK 13
(24)a	7.5	3" x 2" GOULDS PUMP	P 130
(24)b	7.5	3" x 2" GOULDS PUMP	P 130
(25)	5	1 1/2" GALIGHER SUMP PUMP	P 130
(26)		7'ø x 7'H RECIRCULATION TANK	TK 1
(27)	10	OFF-GAS SCRUBBER	SC 1
(28)	–	TANK 7'ø x 8'H FRP	TK 1
		WATER STORAGE	
(29)a	10	2" GALIGHER PUMP	P 130
(29)b	10	2" GALIGHER PUMP	P 130
(30)	10	SCRUBBER FAN (FURNISHED	
		WITH SCRUBBER)	
(31)		VIBRATING FEEDER	VF 13
(32)	10	2" GOULDS PUMP – IRON	P 130
(33)	1.5	1" GOULDS PUMP	P 130
(34)	3	12'ø x 14'H FRP SURGE TANK	TK 13
(35)		PUMP SUMP	PS 1
(36)		PUMP SUMP	PS 1
(37)		SLIDE GATE	SG 1
(38)		BIN MOUNT DUST COLLECTOR	DC 1
(39)		EXIST. 3 STAGE SCRUB. EXHAUST	SC 1
(40)	2	THICKENER 20'ø x 12'	TH 1
(41)	5	2" x 1 1/2" GALIGHER PUMP	P 130
(42)	AIR	3" x 2" DORR PUMP	P 130
(43)		PUMP SUMP	PS 1
(44)		PUMP	P 130
(45)		FUTURE TANK WITH AGITATOR	TK 1
(46)		FUTURE PUMP	P 130
(47)		FUTURE FILTER	DF 1
(48)		FUTURE TANK WITH AGITATOR	TK 1
(49)		FUTURE PUMP	P 130
(50)		FUTURE FILTRATE RECIEVER	FR 1
(51)		FUTURE BAROMETRIC SEPARATOR	S 130
(52)		FUTURE VACUUM PUMP	P 130
(53)		FUTURE SUMP PUMP	PS 1
(54)		FUTURE PUMP	P 130
(55)		FUTURE PUMP	P 130

THIS DRAWING IS THE PROPERTY OF
HECLA MINING COMPANY
THIS DRAWING IS FURNISHED FOR THE SOLE USE OF THE RECIPIENT AND ACCEPTANCE OF SAME CONSTITUTES AN AGREEMENT THAT IT WILL NOT BE PUBLISHED, REPRODUCED OR SHOWN TO ANY OTHER PARTY WITHOUT OUR PERMISSION UNLESS FURNISHED TO RECIPIENT UNDER CONTRACT PROVISIONS AND SHALL REMAIN THE PROPERTY OF HECLA MINING COMPANY SUBJECT TO RETURN UPON REQUEST.

REVISIONS

DATE	DESCRIPTION	BY	APPD	APPD

REFERENCE

DRAWN BY R.A. HORNE
DATE 11/2/89

APEX PROJECT AREA 1300

NEUTRALIZATION SYSTEM
FLOW DIAGRAM

HECLA MINING COMPANY

DRAWING NO. GF-13

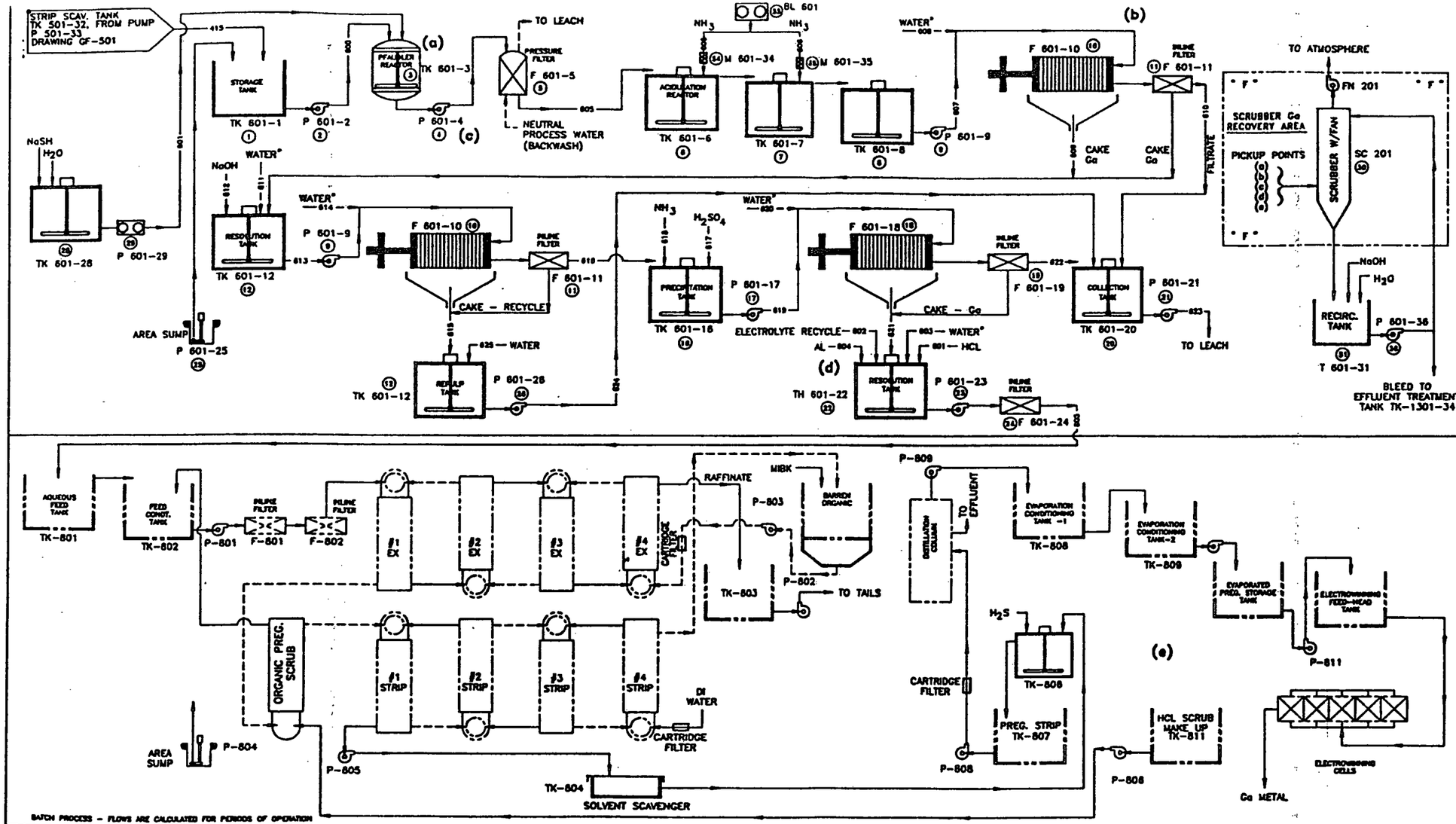

BATCH PROCESS - FLOWS ARE CALCULATED FOR PERIODS OF OPERATION

STREAM NUMBER	PHASE	DURATION	SOLIDS h/hr	LIQUID h/hr	GAS h/hr	TOTAL h/hr	GPM	SG	TEMP °F	H_2SO_4 g/l	NaHS %	HCl g/l
415 PREGNANT STRIP SOLUTION	LIQUID	CONT.	-	802	-	802	1.1	1.10	80	74	-	-
800 FEED TO GALLIUM RECOVERY	LIQUID	8 hr/24	-	4,838	-	4,838	6.8	1.10	80	74	-	-
801 SODIUM HYDRO SULFIDE	LIQUID	8 hr/24	-	72	-	72	0.1	1.20	70	-	40	-
805 SULFIDE FILTRATE	LIQUID	8 hr/24	-	3,000	-	3,000	6.1	1.1	80	-	-	-
806 AMMONIA	LIQUID	8 hr/24	-	248	-	248	0.5	1.0	70	-	-	-
807 GALLIUM - IRON PRECIPITATE	SLURRY	6 hr/24	129	3,000	-	3,129	6.2	1.12	80	-	-	-
808 WASH WATER	LIQUID	20 min	-	818	-	818	20	1.0	70	-	-	-
809 GALLIUM/IRON FILTER CAKE	SOLID	-	129	305	-	434	-	1.25	80	-	-	-
810 GALLIUM/IRON FILTRATE	LIQUID	8 hr/24	-	5,446	-	5,446	0.8	1.11	80	-	-	-
811 REPULP WATER	LIQUID	10 min	-	153	-	153	10	1.0	70	-	-	-
812 SODIUM HYDROXIDE	LIQUID	15 min	-	185	-	185	5	1.53	70	-	-	-
813 BLEACHED PULP	SLURRY	8 hr/24	40	731	-	771	1.2	1.24	80	-	-	-
814 WASH WATER	LIQUID	15 min	-	200	-	200	10	1.0	70	-	-	-
815 IRON FILTER CAKE	SOLID	8 hr/24	40	96	-	136	-	1.25	80	-	-	-
816 GALLIUM FILTRATE	LIQUID	8 hr/24	-	878	-	878	1.5	1.21	90	-	-	-
817 SULFURIC ACID	LIQUID	8 hr/24	-	273	-	273	1.7	1.80	70	-	-	-
818 AMMONIA	LIQUID	1 hr	-	32	-	32	0.4	1.0	70	-	-	-
819 GALLIUM HYDROXIDE PRECIPITATE	SLURRY	1 hr	104	1,085	-	1,189	1.8	1.3	70	-	-	-
820 WASH WATER	LIQUID	8 hr/24	-	474	-	474	11	1.0	70	-	-	-
821 GALLIUM HYDROXIDE CAKE	SOLID	30 min	104	241	-	344	-	1.25	70	-	-	-
822 GALLIUM HYDROXIDE FILTRATE	LIQUID	8 hr/24	-	1,318	-	1,318	2.2	1.18	70	-	-	-
823 RECYCLES TO ORE LEACH	SLURRY	1 hr	240	41,500	-	41,740	3	1.13	70	-	-	-
824 REPULPED IRON CAKE	SLURRY	10 min	40	160	-	200	12	1.18	70	-	-	-
825 IRON CAKE REPULP WATER	LIQUID	5 min	-	84	-	84	10	1.0	70	-	-	-
801 HYDROCHLORIC ACID	LIQUID	1 hr	-	819	-	819	6.4	1.18	70	-	-	363
802 ELECTROLYTE RECYCLE	LIQUID	1 hr	-	7	-	7	-	1.11	7	-	-	-
803 WATER	LIQUID	1 hr	-	548	-	548	6.5	1.0	70	-	-	-
804 ALUMINUM	SOLID	1 hr	7	-	-	-	-	2.7	70	-	-	-
805 WIBK SOLVENT EXTRACTION FEED	LIQUID	-	-	378	-	378	4.1	1.11	70	-	-	140

EQUIPMENT LIST

ITEM	H.P.	DESCRIPTION	REMARK
1		TANK 6'ø x 10'H FRP	TK 601-
2	5	1 1/2" x 1" DURCO PUMP	P 601-
3	2	TANK (PFAUDLER)	TK 601-
4	AIR	1" DEPA PUMP	P 601-
5		FILTER	F 601-
6	5	TANK 6'ø x 6'H RL	TK 601
		WITH AGITATOR	"
7	5	TANK 6'ø x 6'H RL	TK 601
		WITH AGITATOR	
8	5	TANK 6'ø x 6'H RL	TK 601
		WITH AGITATOR	
9	5	1 1/2 x 1" GOULDS	P 601-
10	7.5	FILTER 50 Ft² SHRIVER	F 601-
		PLATE AND FRAME	
11		FILTER (INLINE)	F 601-
12	5	TANK 6'ø x 6'H RL	
		WITH AGITATOR	TK 601
13	2	TANK 6'ø x 6'H WITH AGITATOR	TK 601
17	1/2	1 1/2" COLE-PALMER PUMP	P 601-
18	7.5	FILTER 50 Ft² SHRIVER	F 601-
		PLATE AND FRAME	
19		FILTER (INLINE)	F 601-
20		TANK 6'ø x 6'H FRP	TK 601
		WITH AGITATOR	
21	1	1 1/2" x 1" DURCO PUMP	P 601-
22	5	TANK 404	TK 601
		WITH AGITATOR	
23	AIR	1" DEPA PUMP	P 601-
24		FILTER (INLINE)	F 601-
25	5	1 1/2" GALIGHER SUMP PUMP	P 601-
26	1	1 1/2" x 1" DURCO PUMP	P 601-
28	1/2	TANK 4'ø x 4' FRP	TK 601
29	115V	METERING PUMP, COLE-PALMER	P 601-
		DIAPHRAM	
30		SCRUBBER W/FAN - HCL	SC-201, F
31	-	RECIRCULATION TANK	T 601-
32	5	AIR BLOWER - ROOTS	BL-601
34	-	INCLINE MIXER	M 601-
35	-	INCLINE MIXER	M 601-
36	1/2	1 1/2" x 1 1/2" COLE-PALMER	P 601-

THIS DRAWING IS THE PROPERTY OF
HECLA MINING COMPANY
THIS DRAWING IS FURNISHED FOR THE SOLE USE OF THE RECIPIENT AND ACCEPTANCE OF SAME CONSTITUTES AN AGREEMENT THAT IT WILL NOT BE PUBLISHED, REPRODUCED OR GIVEN TO ANY OTHER PARTY WITHOUT OUR PERMISSION UNLESS PURCHASED TO RECEIVE UNDER CONTRACT PROVISIONS AND SHALL REMAIN THE PROPERTY OF HECLA MINING COMPANY SUBJECT TO RETURN UPON REQUEST.

REVISION

DATE	DESCRIPTION	BY	APPD	APPD
△				
△				
△				
△				
△				
△				

REFERENCE

GF-501 GALLIUM Sx FLOW DIAGRAM

DRAWN BY D.R.HARLIN
DATE 11/2/89

APEX PROJECT AREA 500-800

MODIFICATIONS TO GALLIUM AND PRECIPITATION REFINING

FLOW DIAGRAM

HECLA
MINING COMPANY

DRAWING NO. 6
DRAWING NO. GF-6

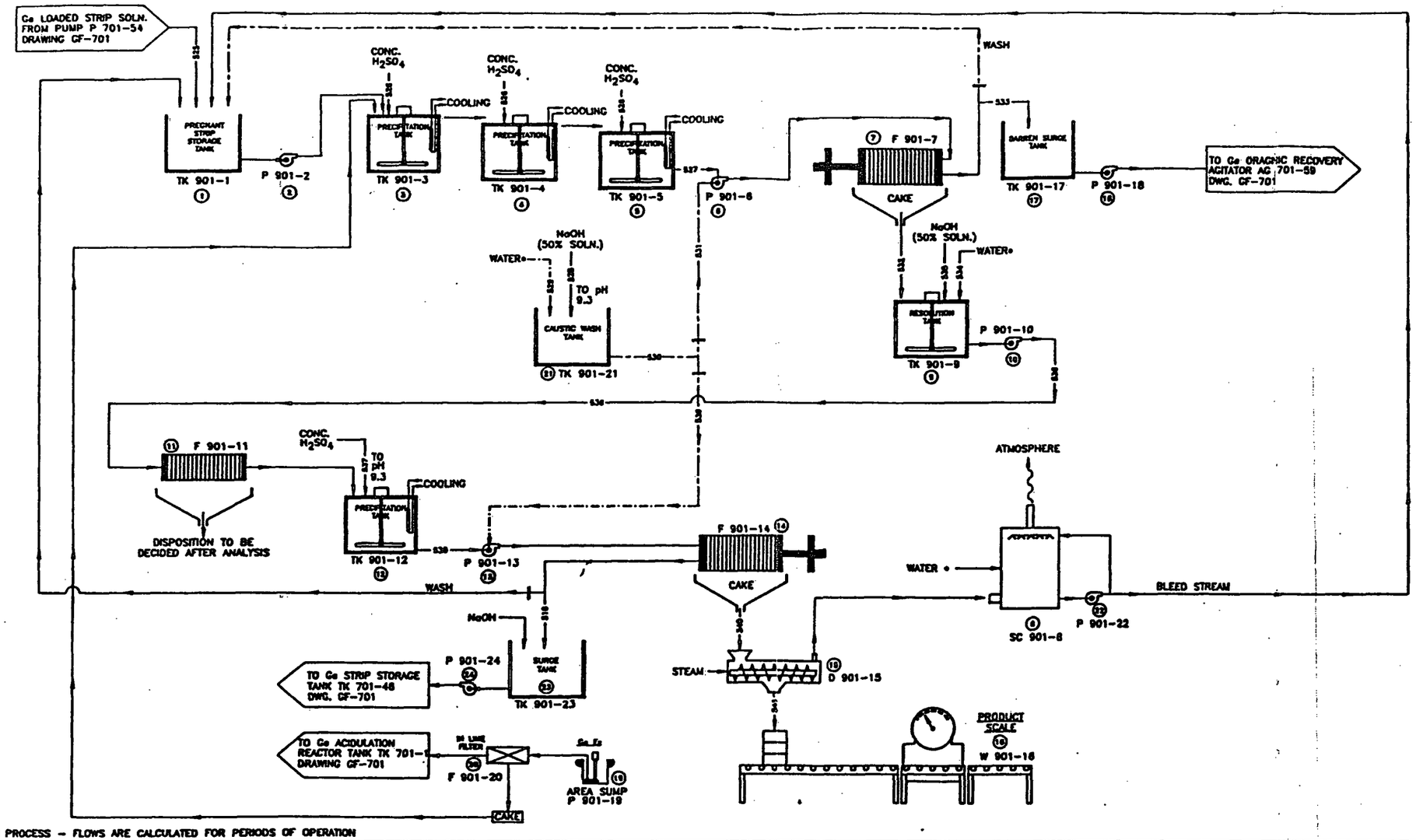

BATCH PROCESS – FLOWS ARE CALCULATED FOR PERIODS OF OPERATION

STREAM NUMBER	PHASE	DURATION	SOLIDS kg/hr	LIQUID kg/hr	GAS kg/hr	TOTAL kg/hr	gpm	S.G.	TEMP. °F	H_2SO_4 %	SO_2 %
525 PRODUCT STRIP SOLUTION	LIQUID	CONT.	–	797	–	797	1.6	1.18	80	–	
526 SULFURIC ACID	LIQUID	21 hr	–	86	–	86	0.1	1.86	70	93%	
527 1st PRECIPITATION	SLURRY	21 hr	18	982	–	998	1.6	1.22	90	–	
528 SODIUM HYDROXIDE	LIQUID	1 hr	–	6.07	–	6.07	0	1.53	70	–	
529 WATER	LIQUID	1 hr	–	3,500	–	3,500	7.2	1.0	70	–	
530 WASH WATER	LIQUID	2 hr	–	1,722	–	1,722	3.6	1.0	70	–	
531 1st PRECIPITATION WASH WATER	LIQUID	1 hr	–	1,324	–	1,324	2.4	1.0	70	–	
532 1st PRECIPITATION CAKE	SOLID	2 hr	198	438	–	636	1.2	1.30	90	–	
533 1st PRECIPITATION FILTRATE	LIQUID	21 hr	–	1,010	–	1,010	1.7	1.20	90	–	
534 REPULP WATER	LIQUID	15 min	–	26,500	–	26,500	58	1.0	70	–	
535 SODIUM HYDROXIDE	LIQUID	1 hr	–	744	–	744	1.0	1.53	70	–	
536 DISSOLVED GERMANIUM PRECIPITATE	LIQUID	15 min	–	33,300	–	33,300	58	1.08	90	–	
537 SULFURIC ACID	LIQUID	2 hr	–	246	–	246	0.3	1.83	70	93%	
538 2nd PRECIPITATION	SLURRY	2 hr	156	4,338	–	4,338	8.4	1.18	90	–	
539 2nd PRECIPITATION WASH WATER	LIQUID	1 hr	–	2,200	–	2,200	4.8	1.0	70	–	
540 2nd PRECIPITATION CAKE	SOLID	2 hr	156	288	–	288	1.2	1.30	90	–	
541 GERMANIUM PRODUCT	SOLID	AS REQ.	13	1.4	–	14.4	~0.1 gal	4.0	90	–	
519 2nd PRECIPITATION FILTRATE	LIQUID	2 hr	–	3,060	–	3,060	6.6	1.08	90	–	

EQUIPMENT LIST

ITEM	H.P.	DESCRIPTION	REMA
1		1130 GAL. FRP PREG. TANK	TK 901
2	AIR	1" DEPA PUMP	P 901-
3	1	TANK 4'Ø x 4'H FRP W/AGITATOR	TK 901
4	1	TANK 4'Ø x 4'H FRP W/AGITATOR	TK 901
5	1	TANK 4'Ø x 4'H FRP W/AGITATOR	TK 901-
6	1	1 1/2" x 1" GOULDS PUMP	P 901-
7	AIR	24" SHRIVER FILTER PRESS	F 901-
8	2	SCRUBBER	SC 901
9	7 1/2	1545 GAL. RESOLUTION TANK W/AGITATOR	TK 901
10	AIR	1 1/2" DEPA PUMP	P 901-
11		4"Ø x 36" RONWINGER-PETTER INLINE FILTER	F 901-
12	5	1130 GAL. RL PRECIP. TANK W/AGITATOR	TK 901
13	5	1 1/2" x 1" GOULDS PUMP	P 901-
14	AIR	24" SHRIVER FILTER PRESS	F 901-
15	5	STEAM DRYER – MARBIN	D 901-
16		PRODUCT SCALE	W 901-
17		TANK 4'Ø x 4'H FRP	TK 901-
18	AIR	1 1/2" DEPA PUMP	P 901-
19	5	2" FYBROC SUMP PUMP	P 901-
20		IN-LINE FILTER	F 901-
21		TANK 5'Ø x 5' FRP	TK 901
22	1	1 1/2" x 1" DURCO PUMP	P 901-
23		SURGE TANK 6'Ø x 6'	TK 901-
24	AIR	1 1/2" DEPA PUMP	P 901-

THIS DRAWING IS THE PROPERTY OF
HECLA MINING COMPANY
THIS DRAWING IS FURNISHED FOR THE SOLE USE OF THE RECIPIENT AND ACCEPTANCE OF THIS CONSTITUTES AN AGREEMENT THAT IT SHALL NOT BE PUBLISHED, REPRODUCED OR SHOWN TO ANY OTHER PARTY WITHOUT OUR PERMISSION UNLESS FURNISHED TO RECIPIENT UNDER CONTRACT PROVISIONS AND SHALL REMAIN THE PROPERTY OF HECLA MINING COMPANY SUBJECT TO RETURN UPON REQUEST.

REVISION	DATE	DESCRIPTION	BY	APPD	APPD

REFERENCE: GF-701 GERMANIUM SOLVENT EXTRA FLOW DIAGRAM

DRAWN BY R.A. HORNE
DATE 11/2/89

APEX PROJECT AREA 900

GERMANIUM RECOVERY FLOW DIAGRAM

HECLA MINING COMPANY

REVISION NO. 4
DRAWING NO. GF-901

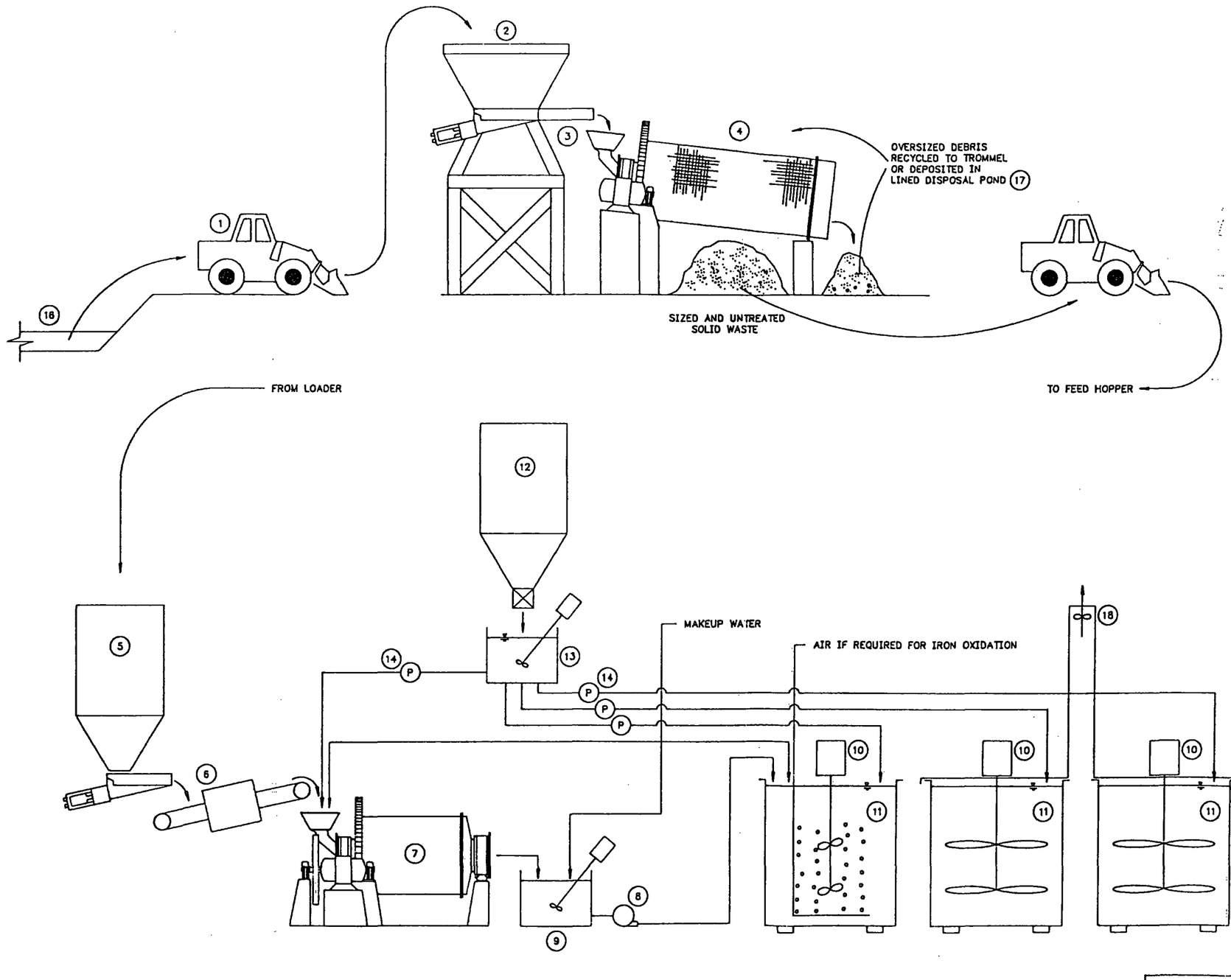

EQUIPMENT LIST (PRELIMINARY)	
ITEM	DESCRIPTION
(1)	SMALL FRONT END LOADER OR BACKHOE
	(POSSIBLY AN AUGER
	OR CONVEYOR SYSTEM)
(2)	RECEIVING HOPPER
(3)	VIBRATING FEEDER
(4)	TROMMEL MILL
	(OPTION = GRIZZLY & VIBRATING
	SCREEN SYSTEM)
(5)	FEED HOPPER (DAY USE SIZE)
(6)	FEEDER/SCALE
(7)	PILOT SIZE MILL
(8)	SLURRY PUMP
(9)	LIME FEED SUMP
(10)	SUMP MIXER
(11)	NEUTRALIZATION REACTOR
	(4000 GAL±, 8' DIA)
(12)	LIME STORAGE/FEED SYSTEM
(13)	LIME SLURRY TANK W/MIXER
(14)	LIME FEED PUMPS (4 POINTS)
(15)	AIR BLOWER/SILENCER SYSTEM
(16)	EXISTING DISPOSAL POND AND WASTE
(17)	DOUBLE LINED DISPOSAL POND
(18)	DRAFT FAN AND EXHAUST STACK

NOTES:

1. LIQUID WASTE WILL BE PUMPED DIRECTLY INTO THE BALL MILL FOR INITIAL ADDITION OF LIME.
2. FOLLOWING TREATMENT, THE WASTE MAY BE FURTHER DEWATERED USING A DISC FILTRATION UNIT.

APEX PROJECT – TREATMENT SYSTEM

PRELIMINARY PROCESS FLOW SHEET

STEFFEN ROBERTSON & KIRSTEN, Consulting Engineers

DATE NOV, 1989

FIGURE NO 7-1

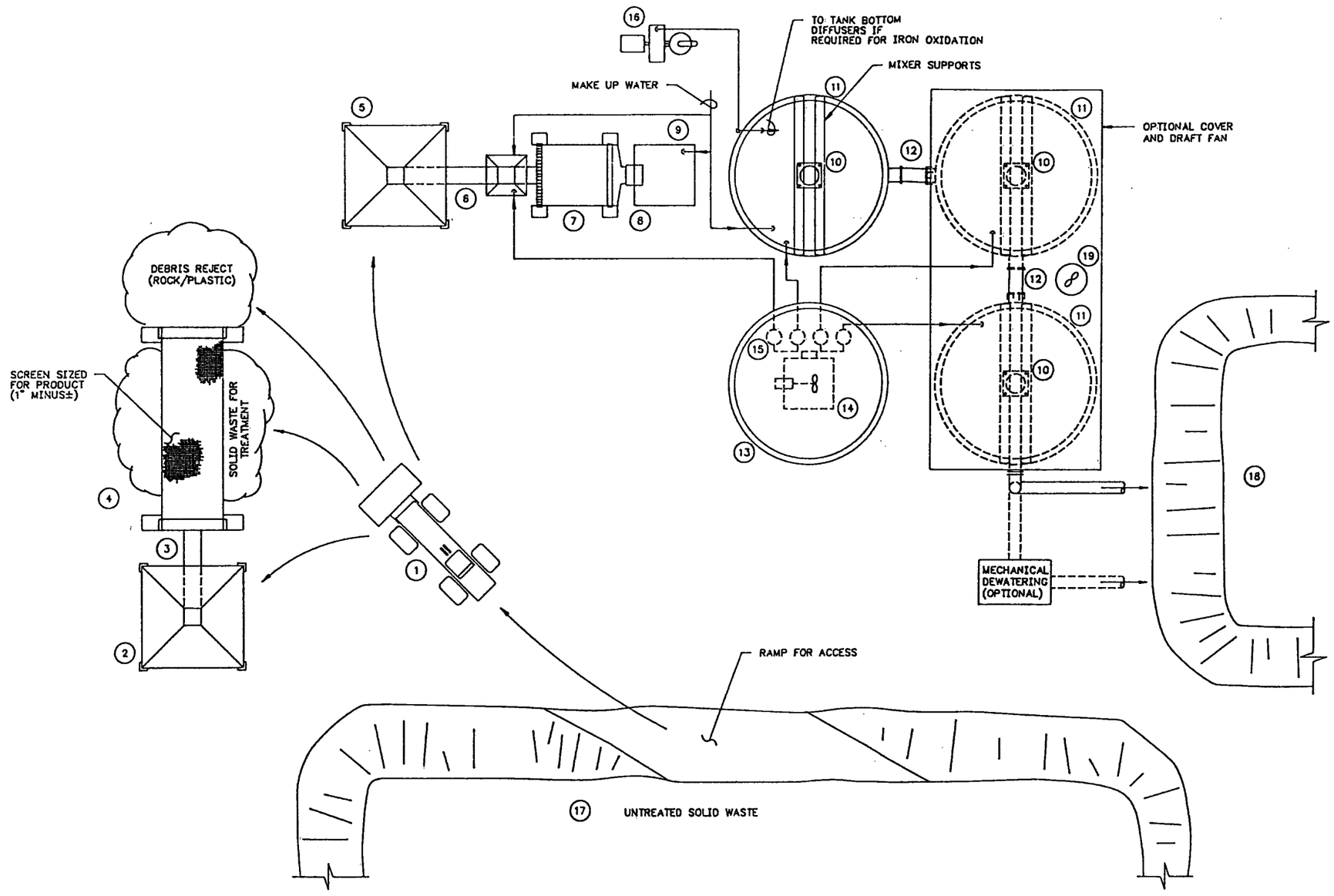

TREATMENT SYSTEM PLAN VIEW

EQUIPMENT LIST (PRELIMINARY)

ITEM	DESCRIPTION
1	SMALL FRONT END LOADER OR BACKHOE (POSSIBLY AN AUGER OR CONVEYOR SYSTEM)
2	RECEIVING HOPPER
3	VIBRATING FEEDER
4	TROMMEL MILL (OPTION = GRIZZLY & VIBRATING SCREEN SYSTEM)
5	FEED HOPPER (DAY USE SIZE)
6	FEEDER/SCALE
7	PILOT SIZE MILL
8	SLURRY PUMP
9	SLURRY TANK
10	SLURRY MIXER
11	NEUTRALIZATION TANK
12	INTERTANK PIPING W/FLEXIBLE HOSE
13	LIME STORAGE/FEED SYSTEM
14	LIME SLURRY TANK W/MIXER
15	LIME FEED PUMPS (4 POINTS)
16	AIR BLOWER/SILENCER SYSTEM
17	EXISTING STORAGE POND
18	DOUBLE LINED DISPOSAL POND
19	EXHAUST STACK AND FAN

NOTES:

1. SECOND AND THIRD NEUTRALIZATION TANKS MAY BE COVERED AND VENTED WITH DRAFT FAN TO DISSIPATE AMMONIA.

APEX PROJECT – TREATMENT SYSTEM

GENERALIZED NEUTRALIZATION TREATMENT SYSTEM

STEFFEN ROBERTSON & KIRSTEN, Consulting Engineers

DATE NOV. 1989

FIGURE NO 7-2