SDMS Document ID
2118904

2118904
EPA NO. UT590002
FILE NO. P2-16

AS BUILT TAILING IMPOUNDMENT NUMBER 2

Attachment O

Information Request #9

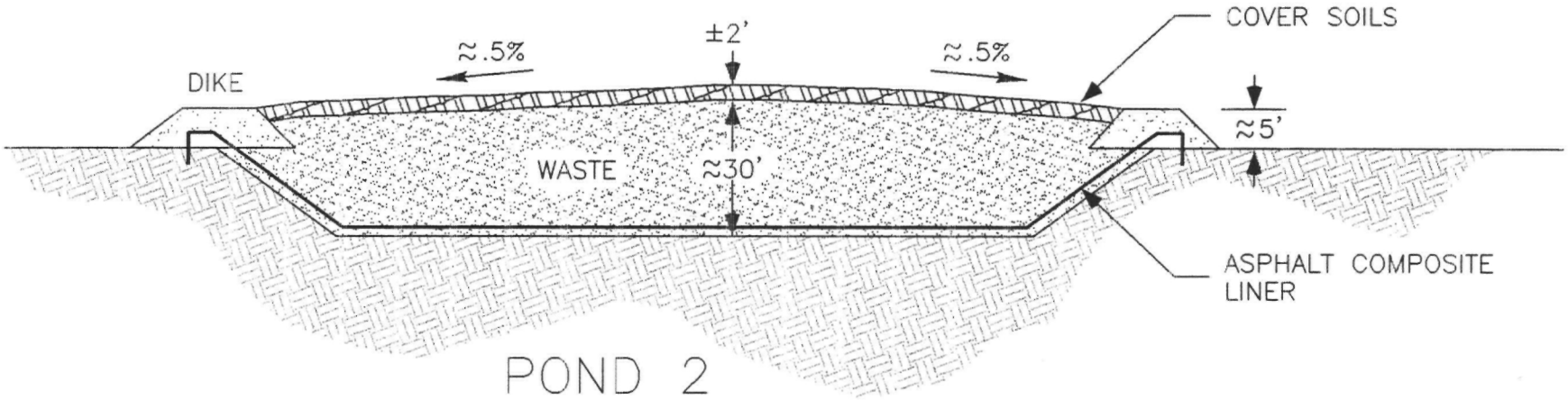

POND 2

(NO SCALE)

APEX MINE and MILL
HECLA POND 2
AS-BUILT DRAWING

1/15/99

ENCLOSURE E

APEXPOND2