Message

From: Kariher, Peter [Kariher.Peter@epa.gov]
Sent: 12/10/2019 4:06:20 PM
To: Faircloth, James [Faircloth.James@epa.gov]
Subject: RE: spiking forms for Round 6
Attachments: EtO Spike 11182019.pdf

I don't think I ever scanned these.

Peter

From: Faircloth, James <Faircloth.James@epa.gov>
Sent: Tuesday, December 10, 2019 10:56 AM
To: Kariher, Peter <Kariher.Peter@epa.gov>
Subject: spiking forms for Round 6

I'm sure you provided copies to Tom before he left but I don't see where he put them on the L drive. I was wondering if you could forward to me copies of the spiking logs where you spiked two cans for us, (11/15/2019 and 11/19/2019). We got the report back and I'm working on pushing it out.

-James

EtO Spike # Tom Long

11/14/2019 11:30

Nicot Mod 10 4485 0.20 LPM

Can # 2061

Controller # E-024

C_1 = 0.070 ppm

$V_1 = \frac{C_2 V_2}{C_1}$

V_1 =

C_2 = 0.005 ppm = 5 ppb

V_2 = 15,000 mL

V_1 = need 1071 mL

5.142 ppm EtO - Airgas std.

Boost Reads = 5.07 ppm

Controller = 0.581 LPM @ 0°C

= 1.84 min

Start @ 30" Hg = 1 min 50.6 sec

End @ 28.5" Hg

Boost C_1 = 0.069 ppm = 69 ppb

5.142 ppm Airgas MAX @ 5.133 ppm

11/18/2019
12:00

CAN #2097
CONTROLLER # E-023

C_1 = 0.070 ppm

V_1 =

C_2 = 0.005 ppm

V_2 = 151 000 mL

V_1 = 107 mL

$V_1 = \frac{C_2 V_2}{C_1}$

Spike In Tem Long

TO-15

Flow = 528 mL/min

2.03 min 2 min 2 seconds

Start @ 29 inHg
End @ 27 inHg

5 ppb spike

Message

From: Baldauf, Richard [Baldauf.Richard@epa.gov]
Sent: 12/9/2019 10:59:38 PM
To: Faircloth, James [Faircloth.James@epa.gov]
Subject: RE: Enthalpy Round 6 report attached

Didn't cut anything. I'll look back and see if he snt something else separately

---

From: Faircloth, James <Faircloth.James@epa.gov>
Sent: Monday, December 9, 2019 3:03 PM
To: Baldauf, Richard <Baldauf.Richard@epa.gov>
Subject: RE: Enthalpy Round 6 report attached

Did you mean to remove the attachment? I got Craig's email forwarded but no report? Are you waiting until Libby signs off?

-James

From: Baldauf, Richard <Baldauf.Richard@epa.gov>
Sent: Friday, December 06, 2019 4:21 PM
To: Faircloth, James <Faircloth.James@epa.gov>
Subject: Fwd: Enthalpy Round 6 report attached

Hey James. Wanted to make sure you saw this in case you hadn't already. Is this good to forward to OTAQ?

Begin forwarded message:

From: Craig Williams <CWilliams@css-inc.com>
Date: December 6, 2019 at 4:12:59 PM EST
To: "Baldauf, Richard" <Baldauf.Richard@epa.gov>, "Nessley, Libby" <Nessley.Libby@epa.gov>
Cc: "Klavon, Patty" <Klavon.Patty@epa.gov>
Subject: Enthalpy Round 6 report attached

Hi Richard and Libby,
The report from Enthalpy is attached that includes EPA M3C, TO-15, and ethylene oxide analyses results from Round 6 tests that occurred on November 14, 15, & 19, 2019.

Please reply if you have any questions.

Craig Williams
Engineer
CSS | Office: 919.541.0336 | www.css-inc.com
An employee-owned company
Contractor to the USEPA

Message

From: Nessley, Libby [Nessley.Libby@epa.gov]
Sent: 12/9/2019 12:59:09 PM
To: Faircloth, James [Faircloth.James@epa.gov]; Baldauf, Richard [Baldauf.Richard@epa.gov]
Subject: RE: Enthalpy Round 6 report attached

Thanks James. I just do a data audit for the EtO numbers b/c they are considered QA Cat A. I'll let everyone know if there are any issues with the validity of the concentrations reported.

Libby

From: Faircloth, James <Faircloth.James@epa.gov>
Sent: Monday, December 09, 2019 7:53 AM
To: Baldauf, Richard <Baldauf.Richard@epa.gov>; Nessley, Libby <Nessley.Libby@epa.gov>
Subject: RE: Enthalpy Round 6 report attached

Libby, I believe the attached spreadsheet is what you are looking for. Spiked cans are 2061 and 2097. I still don't have the report but I have a summary to do on it.

-James

From: Baldauf, Richard <Baldauf.Richard@epa.gov>
Sent: Monday, December 09, 2019 7:49 AM
To: Nessley, Libby <Nessley.Libby@epa.gov>
Cc: Faircloth, James <Faircloth.James@epa.gov>
Subject: RE: Enthalpy Round 6 report attached

Thanks Libby. Copying James in hopes he knows about this. Or is it something Peter might have?

From: Nessley, Libby <Nessley.Libby@epa.gov>
Sent: Monday, December 9, 2019 7:34 AM
To: Baldauf, Richard <Baldauf.Richard@epa.gov>
Subject: RE: Enthalpy Round 6 report attached

Yes-I should be able to look through this today and let you know. I will need the test schedule so I know what samples were spikes...Tom typically had that somewhere in a table he could send me?

Libby

From: Baldauf, Richard <Baldauf.Richard@epa.gov>
Sent: Sunday, December 08, 2019 11:25 AM
To: Nessley, Libby <Nessley.Libby@epa.gov>
Subject: FW: Enthalpy Round 6 report attached

Hi Libby,

Still catching up, but I think the next step is a QA check by you all before sending to OTAQ, right?

From: Craig Williams <CWilliams@css-inc.com>
Sent: Friday, December 6, 2019 4:13 PM

To: Baldauf, Richard <Baldauf.Richard@epa.gov>; Nessley, Libby <Nessley.Libby@epa.gov>
Cc: Klavon, Patty <Klavon.Patty@epa.gov>
Subject: Enthalpy Round 6 report attached

Hi Richard and Libby,
The report from Enthalpy is attached that includes EPA M3C, TO-15, and ethylene oxide analyses results from Round 6 tests that occurred on November 14, 15, & 19, 2019.

Please reply if you have any questions.

Craig Williams
Engineer
CSS | Office: 919.541.0336 | www.css-inc.com
An employee-owned company
Contractor to the USEPA

E+O Spike for Tom Long

10/21/2019 14:30

Alicat Mot ID 4485 0-20 LPM

Cal# 2113 Controller# E-052

Max Stem boost = 0.062

C_1 = 0.07 ppm

V_1 =

C_2 = .005 ppm 5 ppb

V_2 = 15,000 mL

$$V_1 = \frac{C_2 V_2}{C_1}$$

need 1071 mL

= 1.75 min 1 min 46 sec

Flow = .609 mL/min Alicat @ 0°C

Start @ 25" Hg

end @ 24" Hg

5 ppb

2.1 O Spike for Tom Long

10/21/2019 14:40

Cont 2044

Controller = ≈ .047

Max Starboost = 0.0611 ppm

C_1 = .07 ppm

V_1 =

C_2 = .006 ppm 5 ppb

V_2 = 15,000 mL

need 1071 mL

= 1.7136 min 1 min = 43 sec

Aliquot Flow = 625 mL/min @ 0°C

Start @ 28" Hg

End @ 27" Hg

5 ppb final

ETO Spike for Tom Long

10/24/2019 8:00

5.142 ppm Airgas reads on Starboost = 0.245 ppm

$$\frac{C_1 V_1 + C_2 V_2}{C_1}$$

C_1 = 0.250 ppm

V_1 =

C_2 = .005

V_2 = 15,000

+ ethylene
+ acetaldehyde
+ propane

V_1 = 300 mL

Aliquot flow = 0.591 LPM

0.51 min = 30.5 sec

start @ 26.5" Hg
end @ 15 " Hg (?) bad gauge

Can # 2030
Controller # E-031

Message

From: Cook, Rich [Cook.Rich@epa.gov]
Sent: 10/2/2019 4:34:37 PM
To: Hoyer, Marion [hoyer.marion@epa.gov]; Cullen, Angela [cullen.angela@epa.gov]; Fernandez, Antonio [fernandez.antonio@epa.gov]; Laroo, Chris [laroo.chris@epa.gov]; Kolowich, Bruce [kolowich.bruce@epa.gov]; Nelson, Brian [nelson.brian@epa.gov]; Olechiw, Michael [olechiw.michael@epa.gov]; Loftis, Kathy [loftis.kathy@epa.gov]; Walters, Charles [walters.charles@epa.gov]
CC: Faircloth, James [Faircloth.James@epa.gov]; Snow, Richard [Snow.Richard@epa.gov]
Subject: C2 Compounds -- Percent of VOC

CAS	Specie ID	Test Name		Pre-2007 E55 Transient	2007-2010 HEI ACES Phase 1 16-hr	2010+ HEI ACES Phase 2 16-hr
74-85-1	452	ethene	o	20.45	3.07	9.55
50-00-0	465	formaldehyde	ald-ket	8.89	10.05	2.20
75-07-0	279	acetaldehyde	ald-ket	5.57	3.36	3.45
74-86-2	282	acetylene	o	6.69	0.58	0.82

As per our discussion today.

-----Original Appointment-----
From: Hoyer, Marion <hoyer.marion@epa.gov>
Sent: Wednesday, September 04, 2019 10:49 AM
To: Hoyer, Marion; Dodder, Rebecca; Cook, Rich; Cullen, Angela; Fernandez, Antonio; Laroo, Chris; Kolowich, Bruce; Nelson, Brian; Michael Olechiw (olechiw.michael@epa.gov); Yelverton, Tiffany; Loftis, Kathy; Walters, Charles; Long, Thomas; Shores, Richard; Baldauf, Richard; McDonald, Joseph; Shappley, Ned; Weinstock, Lewis
Cc: Faircloth, James; Snow, Richard
Subject: ORD motor vehicle EtO testing
When: Wednesday, October 02, 2019 10:00 AM-11:00 AM (UTC-05:00) Eastern Time (US & Canada).
Where: 1-202-991-0477 8908907#

Draft agenda for our meeting October 2:

1) Recap the results of the exhaust testing and checks on methods and blanks, etc (20-30min)
a. Discuss plans for next set of tests (which vehicle/conditions)
b. Discuss status of the datagaps/questions that need to be evaluated to be confident in results
2) Update on methods evaluation work separate from the TO-15 method (NVFEL and ORD) 10 min
3) Communication internally and externally on where we stand with regard to evaluation of mobile sources and other combustion sources for EtO (5 min)
4) Status of lab and OTAQ budgets & staffing in FY20 (10 min)
➔ There might not be much any of us can say with certainty, but understanding generally where we all are with staffing and funding will help with planning/expectations moving forward
5) Wrap-up / decide on timing for next meeting

Message

From: Phelps, Lara [Phelps.Lara@epa.gov]
Sent: 11/23/2019 8:29:32 PM
To: Faircloth, James [Faircloth.James@epa.gov]
Subject: RE: Should clarify

Sounds great! I look forward to a further conversation and seeing how we can possibility juggle some work to provide greater consistency.

Lara P. Phelps, **Director**
Center for Environmental Measurement and Modeling, Air Methods & Characterization Division
U. S. Environmental Protection Agency, Office of Research and Development
109 T.W. Alexander Drive (E343-04), Research Triangle Park, NC 27711
Office: 919-541-5544 | Cell: 984-287-0594 | Email: phelps.lara@epa.gov

"CEMM protects human health and the environment by delivering innovative measurement and modeling solutions to EPA and its partners."

From: Faircloth, James <Faircloth.James@epa.gov>
Sent: Friday, November 22, 2019 12:57 PM
To: Phelps, Lara <Phelps.Lara@epa.gov>
Subject: RE: Should clarify

I filled Rebecca in on most of the details last Friday when we talked and she originally tried to make that meeting invite. I also attempted to get back up with Val this week after she brought down an award but we were in the middle of testing. I have 3 ideas for continuation rounds for EtO testing, one of which OTAQ already heard the details of and expressed interest but couldn't be completed due to logistical issues. Talking to Ingrid George it sounds like the analytical capability is being brought in house potentially reducing the cost of a round of dyno testing significantly (our main outlay has been the analytical lab costs). The main hurdles at this point are support for sampling operations and only having an acting WACOR (Richard Baldauf) who already has a full schedule and demands on his time. I cannot operate the laboratory by myself but with some help (physical and administrative) we could continue this testing instead of shifting away from the EtO issue.

-James

From: Phelps, Lara <Phelps.Lara@epa.gov>
Sent: Friday, November 22, 2019 9:37 AM
To: Faircloth, James <Faircloth.James@epa.gov>
Subject: RE: Should clarify

I know you do and think it is fantastic you can rib each other that way. Not something you can do with everyone. ☺

I am really glad to hear that you have some thoughts on things going forward, which is a wonderful conversation for us to all have. Rebecca and I did not get to talk about it other than my seeing a meeting on the calendar and then it being gone. She is now out sick, so rescheduling was a good idea. I am looking forward to the conversation, however, and the path ahead.

Happy Friday! Wonderful to see you as always.
Lara

Lara P. Phelps, **Director**
Center for Environmental Measurement and Modeling, Air Methods & Characterization Division
U. S. Environmental Protection Agency, Office of Research and Development
109 T.W. Alexander Drive (E343-04), Research Triangle Park, NC 27711
Office: 919-541-5544 | Cell: 984-287-0594 | Email: phelps.lara@epa.gov

"CEMM protects human health and the environment by delivering innovative measurement and modeling solutions to EPA and its partners."

From: Faircloth, James <Faircloth.James@epa.gov>
Sent: Friday, November 22, 2019 9:01 AM
To: Phelps, Lara <Phelps.Lara@epa.gov>
Subject: Should clarify

Got back down and started thinking about it, I should clarify that I do like the people I work with. Little dark humor there we like to joke about.

To that end though, Rebecca had tried to setup a meeting with the involved parties earlier this week (schedules didn't allow obviously) to discuss plans moving forward. I had some thoughts on it figured we could touch base about it.

-James

Message

From: Long, Thomas [Long.Thomas@epa.gov]
Sent: 8/29/2019 3:38:03 PM
To: Snow, Richard [Snow.Richard@epa.gov]; Faircloth, James [Faircloth.James@epa.gov]
CC: Williams, Craig [williams.craig@epa.gov]
Subject: 2019 EtO Project Plan and Testing Overview (20190829).docx
Attachments: 2019 EtO Project Plan and Testing Overview (20190829).docx; Phase 5 HDGT E10 Sample Plan 20190829.xlsx

FYI

Message

From: Kariher, Peter [Kariher.Peter@epa.gov]
Sent: 8/27/2019 12:01:16 PM
To: Long, Thomas [Long.Thomas@epa.gov]
CC: Snow, Richard [Snow.Richard@epa.gov]; Faircloth, James [Faircloth.James@epa.gov]
Subject: Data Sheets from Can Spiking
Attachments: EtO Spike 08262019.pdf

Here are the data sheets.

Peter

++++++++++++++++++++++++++++++++++++
Peter H. Kariher
Chemist
US EPA
Stationary Source Branch
Air & Energy Management Division
National Risk Management Research Laboratory
Office of Research and Development
(919) 541-5740
mailto:kariher.peter@epa.gov
++++++++++++++++++++++++++++++++++++

=to Spike for Tom Long

8/26/2014 11:16 AM

Alicat MET ID = ~~4361~~ 4485 0-20 LPM

Cont# 2075

Controller = E-NA

C_1 = 0.0747 ppm

V_1 =

C_2 = .005 ppm = 5 ppb

V_2 = 15,000 mL

$V_1 = \frac{C_2 V_2}{C_1}$

V_1 = 1.004 mL

Controller Alicat = 1205 mL/min @ 0°C

Tag flow = 1312.0 mL/min = 0.8332 min

= 49.99 sec.

~ 50 sec.

Start @ 25" Hg

End @ 24" Hg

5 ppb Spike

E10 Spike for Tom Long
8/26/2019 11:30AM

Alical METHOD = 4185 0-20 LPM

Can # 2039
Controller # E-050

C_1 = .0747 ppm
V_1 =

C_2 = .005 ppm = 5 ppb
V_2 = 15,000 mL

V_1 = 1,004 mL

Controller Flow Alical @ 0°C = 1165 mL/min

Tag Flow = 1250.0 mL/min

Start @ 29.5" Hg = 0.862 min
End @ 29" Hg = 51.7 sec

5 ppb Spike

ETO Spike for Tom Long

8/26/2019 11:38 AM

Alical MET ID = 4485 0-20 LPM

Cap # 2072

Controller # E-024

C_1 = ~~0.74~~ 0.0747 ppm

V_1 =

C_2 = 0.005 ppm = 5 ppb

V_2 = 15,000 mL

V_1 = 1,004 mL

Controller flow Alical @ 0°C = 1115 mL/min

Tag flow = 1199.0 mL/min

= 0.900 min

= 54.0 sec.

Start @ 29" Hg

End @ 28" Hg

5 ppb spike

E+O Spike for Tom Long

8/26/2019 11:45 AM

Can # 2042

Controller # E-031

C_1 = 0.0747 ppm

V_1

C_2 = .005 ppm = 5 ppb

V_2 = 15,000 mL

V_1 = 1.004 mL

Controller flow Alicat @ 0°C = 1253 mL/min

Tag flow = 1367 mL/min

= 0.801 min

= 48.1 sec

Start @ 28" Hg

End @ 26" Hg

5 ppb spike

EtO Spike for Tom Cong

8/20/2019 11:55 AM

Alicat 0 - 1000 mL/min
METHOD = 4361

Can # 2052

Controller # E-032

C_1 = 0.0797 ppm

V_1 =

C_2 = .005 ppm = 5 ppb

V_2 = 15,000 mL

V_1 = 1004 mL

Controller flow Alicat @ 0°C = 504.3 mL/min

Tug flow = 570.0 mL/min

= 1.990 min

= 1 min 59.4 sec

Start @ 28" Hg
End @ 26" Hg

5 ppb Spike

Et O Spike per Tom Long

8/26/2019 12:05 PM

Can # 2031

Alicat MET # D-4361
0-1000 mL/min

Controller # E-015

C_1 = 0.0747 ppm

V_1 =

C_2 = 0.005 ppm = 5 ppb

V_2 = 15,000 mL

V_1 = 1004 mL

Controller flow Alicat @ 0°C = 476.3 mL/min

Tag flow = 540.0 mL/min

= 2.11 min

Start @ 31" Hg = 2 min 6.5 sec

End @ 29" Hg

5 ppb Spike

Message

From: Craig Williams [CWilliams@css-inc.com]
Sent: 7/31/2019 4:07:31 PM
To: Snow, Richard [Snow.Richard@epa.gov]; Nessley, Libby [Nessley.Libby@epa.gov]
CC: Long, Thomas [Long.Thomas@epa.gov]; Faircloth, James [Faircloth.James@epa.gov]
Subject: RE: Enthalpy phase 3 report
Attachments: 0519-205R.pdf

Hi Richard and Libby,
The revised report is attached.

Craig

Craig Williams
Engineer
CSS | Office: 919.541.0336 | www.css-inc.com
An employee-owned company
Contractor to the USEPA

From: Snow, Richard [Snow.Richard@epa.gov]
Sent: Wednesday, July 31, 2019 8:06 AM
To: Williams, Craig
Cc: Long, Thomas; Faircloth, James; Nessley, Libby
Subject: Enthalpy phase 3 report

Craig,

Could you have Enthalpy respond to the following concern regarding the Phase 3 report?

Please see page 121 of the enthalpy report concerning can # 2044. The report refers to the Can Size (L) as being 6 liters. These were 15-liter cans, so it seems the subsequent calculated volumes for this can under the various pressures may not be correct. Does this impact the reported EtO concentrations?

Richard Snow | Engineering Technician
U.S. Environmental Protection Agency/ORD/NRMRL/AEMD/DSBB
109 T.W. Alexander Drive, Mail Drop E343-02
RTP, NC 27711

Office 919.541.3135 | Cell 919.621.5852
Snow.Richard@EPA.gov

Message

From: Snow, Richard [Snow.Richard@epa.gov]
Sent: 11/13/2019 3:20:08 PM
To: Long, Thomas [Long.Thomas@epa.gov]; Faircloth, James [Faircloth.James@epa.gov]
Subject: Spike recoveries
Attachments: SpikedCanRecoveryCalcsAEMDversion.xlsx

Tom,

James and I ran the can data through the "spiking" spreadsheet and came up with recoveries basically 15% for all three cans.
Peter reported both starboost analysed and gas divider calculated EtO concentrations, which were slightly different from each other. We ran both sets through the spreadsheet and came up with the 15%.

Richard Snow | Engineering Technician
U. S. Environmental Protection Agency, Office of Research and Development
Center for Environmental Measurement and Modeling, Air Methods and Characterization Division
Combustion Sources Branch
109 T.W. Alexander Drive, Mail Drop E343-02
RTP, NC 27711

Office 919.541.3135 | Cell 919.621.5852
Snow.Richard@EPA.gov

Message

From: Craig Williams [CWilliams@css-inc.com]
Sent: 3/28/2019 5:58:58 PM
To: Long, Thomas [Long.Thomas@epa.gov]
CC: Snow, Richard [Snow.Richard@epa.gov]; Faircloth, James [Faircloth.James@epa.gov]
Subject: FW: ALS Website Request
Attachments: ATT00001.txt

Hi Tom,
ALS responded below that they do not offer ETO via TO-15.

Craig

Craig Williams
Senior Engineer
Contractor to the USEPA
CSS (Jacobs Teammate)
1910 Sedwick Road
Durham, NC 27713
Office Phone: (919) 541-0336
www.css-inc.com

From: Donna Jackson [Donna.Jackson@ALSGlobal.com]
Sent: Thursday, March 28, 2019 8:16 AM
To: Craig Williams
Subject: ALS Website Request

Good Morning,

Thank you for contacting ALS. I contacted our air laboratory and received the following response.

We don't offer ETO via TO-15 – we do not have a calibration standard for it. ETO does not work well from a canister.

There are NIOSH and OSHA methods for it – utilize a sorbent tube
https://www.cdc.gov/niosh/npg/npgd0275.html
Measurement Methods
NIOSH 1614 , 3800;
OSHA 30 , 49 , 50

Please let me know if you can utilize other methods and I can check with our other labs that offer NIOSH and OSHA methods. Thank you again for contacting ALS.

Regards,

Donna Davis Jackson
Technical Sales Representative, Environmental
USA

M +1 904-874-5826 F +1 904-739-2011
donna.jackson@alsglobal.com
9143 Philips Highway, Suite 200
Jacksonville, FL 32256

Subscribe to Webinar Wednesdays

Right Solutions · Right Partner
alsglobal.com | How was your ALS experience?

Message

From: Craig Williams [CWilliams@css-inc.com]
Sent: 3/26/2019 6:55:22 PM
To: Long, Thomas [Long.Thomas@epa.gov]
CC: Snow, Richard [Snow.Richard@epa.gov]; Faircloth, James [Faircloth.James@epa.gov]
Subject: RE: If not Enthalpy, how about ALS

I requested information from ALS earlier and I'm waiting on a reply.

Thanks

Craig Williams
Senior Engineer
Contractor to the USEPA
CSS (Jacobs Teammate)
1910 Sedwick Road
Durham, NC 27713
Office Phone: (919) 541-0336
www.css-inc.com

From: Long, Thomas [Long.Thomas@epa.gov]
Sent: Monday, March 25, 2019 12:31 PM
To: Craig Williams
Cc: Snow, Richard; Faircloth, James
Subject: If not Enthalpy, how about ALS

Could you enquire as to whether ALS could analyze diluted mobile source ETO measurements per TO-15? What cans, flow control, etc. they provide and what their turn around is on analyses? What is their detection limit, costs for EPA Method 3C, and cost to provide some stability points for a few of the EtO samples. We may need to go with an Enthalpy alternative.

Thomas Long, Mechanical Engineer
Mail Drop E343-02
Building D Room 360
109 T. W. Alexander Drive
Research Triangle Park, NC 27711
Phone: 919-541-3944

Message

From: Craig Williams [CWilliams@css-inc.com]
Sent: 3/26/2019 1:31:14 PM
To: Bryan Tyler [bryan.tyler@enthalpy.com]
CC: Long, Thomas [Long.Thomas@epa.gov]; Snow, Richard [Snow.Richard@epa.gov]; Faircloth, James [Faircloth.James@epa.gov]
Subject: RE: My contact info

Hi Bryan,
The project is sampling diluted mobile sources (gasoline and diesel). I'm copying the EPA WACOR here so that he can better answer specific questions and so you can provide alternative suggestions.

Thanks

Craig Williams
Senior Engineer
Contractor to the USEPA
CSS (Jacobs Teammate)
1910 Sedwick Road
Durham, NC 27713
Office Phone: (919) 541-0336
www.css-inc.com

From: Bryan Tyler [bryan.tyler@enthalpy.com]
Sent: Monday, March 25, 2019 3:06 PM
To: Craig Williams
Subject: FW: My contact info

Hi Craig,
I worked with Preston on his earlier EPA Method TO-15 Ethylene oxide program. Can you provide me details on your project? We have run samples for EO from combustion sources, however these samples have damaged our equipment and the downtime associated with the analysis is not financially worth viable. We do have a number of other ideas for the analysis of combustion sources for Ethylene oxide.

Are you able to discuss project specifics later today or tomorrow?

Bryan

Please take a moment to provide customer feedback.

ENTHALPY ANALYTICAL

Bryan Tyler
Vice President
Enthalpy Analytical, LLC
800 Capitola Drive, Suite 1
Durham, NC 27713
(919) 850-4392

bryan.tyler@enthalpy.com
www.enthalpy.com

Terms and Conditions
Enthalpy Sample Acceptance Policy

SSAS Laboratory ID: L0036, L0149 (metals only)

From: Ashley Miller <amiller@montrose-env.com>
Sent: Friday, March 22, 2019 8:10 AM
To: Bryan Tyler <bryan.tyler@enthalpy.com>
Subject: FW: My contact info

EPA guy that called this week

Please take a moment to provide customer feedback.

ENTHALPY
ANALYTICAL

Ashley Miller
Senior Project Manager
Enthalpy Analytical, LLC
800 Capitola Drive, Suite 1
Durham, NC 27713
(919) 850-4392
ashley.miller@enthalpy.com
www.enthalpy.com

Terms and Conditions
Enthalpy Sample Acceptance Policy
SSAS Laboratory ID: L0036, L0149 (metals only)

From: Craig Williams <CWilliams@css-inc.com>
Sent: Wednesday, March 20, 2019 1:36 PM
To: Ashley Miller <amiller@montrose-env.com>
Subject: RE: My contact info

Received

Craig Williams
Senior Engineer
Contractor to the USEPA
CSS (Jacobs Teammate)
1910 Sedwick Road
Durham, NC 27713
Office Phone: (919) 541-0336
www.css-inc.com

From: Ashley Miller [amiller@montrose-env.com]
Sent: Wednesday, March 20, 2019 1:35 PM

To: Craig Williams
Subject: My contact info

Please take a moment to provide customer feedback.

ENTHALPY ANALYTICAL

Ashley Miller
Senior Project Manager
Enthalpy Analytical, LLC
800 Capitola Drive, Suite 1
Durham, NC 27713
(919) 850-4392
ashley.miller@enthalpy.com
www.enthalpy.com

Terms and Conditions
Enthalpy Sample Acceptance Policy
SSAS Laboratory ID: L0036, L0149 (metals only)

CONFIDENTIALITY NOTICE: The contents of this email message and any attachments are intended solely for the addressee(s) and may contain confidential, proprietary and/or privileged information and may be legally protected from disclosure. If you are not the intended recipient of this message or their agent, or if this message has been addressed to you in error, please immediately alert the sender by reply email and then delete this message and any attachments and the reply from your system. If you are not the intended recipient, you are hereby notified that any disclosure, use, dissemination, copying, or storage of this message or its attachments is strictly prohibited.

CONFIDENTIALITY NOTICE: The contents of this email message and any attachments are intended solely for the addressee(s) and may contain confidential, proprietary and/or privileged information and may be legally protected from disclosure. If you are not the intended recipient of this message or their agent, or if this message has been addressed to you in error, please immediately alert the sender by reply email and then delete this message and any attachments and the reply from your system. If you are not the intended recipient, you are hereby notified that any disclosure, use, dissemination, copying, or storage of this message or its attachments is strictly prohibited.

Message

From: Long, Thomas [Long.Thomas@epa.gov]
Sent: 3/20/2019 4:12:49 PM
To: Snow, Richard [Snow.Richard@epa.gov]; Faircloth, James [Faircloth.James@epa.gov]
Subject: RE: EtO/Kariher

I left him a voice mail.

_____
Thomas Long, Mechanical Engineer
Mail Drop E343-02
Building D Room 360
109 T. W. Alexander Drive
Research Triangle Park, NC 27711
Phone: 919-541-3944

From: Snow, Richard
Sent: Wednesday, March 20, 2019 12:12 PM
To: Long, Thomas <Long.Thomas@epa.gov>; Faircloth, James <Faircloth.James@epa.gov>
Subject: EtO/Kariher

So I'm thinking we should ask for Kariher's support as follows:

1. Let us "borrow" several feet of the ¼" silcotek coated tubing and manifold.
2. Spike 3 summa cans with EtO.
3. Recommendation for filtering sample prior to entering summa can.

Richard Snow | Engineering Technician
U.S. Environmental Protection Agency/ORD/NRMRL/AEMD/DSBB
109 T.W. Alexander Drive, Mail Drop E343-02
RTP, NC 27711

Office 919.541.3135 | Cell 919.621.5852
Snow.Richard@EPA.gov

Message

From: Snow, Richard [Snow.Richard@epa.gov]
Sent: 3/20/2019 12:57:03 PM
To: Long, Thomas [Long.Thomas@epa.gov]; Faircloth, James [Faircloth.James@epa.gov]
Subject: RE: ETo Canister sampling

We don't have the silco coated sample lines. Our current summa can collection station routes the sample from the dilution tunnel through 1/8" ss tubing, mass flow controller, and solenoid valve, then to the summa can, so if any of these components are creating a problem, then we need to address them. One solution would be to connect the summa can directly to the dilution tunnel (via silco coated tubing), assuming the summa can could be fitted with a suitable orifice to control flow, and an operator to manually turn on/off the summa can's valve.

Perhap's Peter can show us his setup.

From: Long, Thomas
Sent: Wednesday, March 20, 2019 6:40 AM
To: Snow, Richard <Snow.Richard@epa.gov>; Faircloth, James <Faircloth.James@epa.gov>
Subject: FW: ETo Canister sampling

Thomas Long, Mechanical Engineer
Mail Drop E343-02
Building D Room 360
109 T. W. Alexander Drive
Research Triangle Park, NC 27711
Phone: 919-541-3944

From: Shores, Richard
Sent: Tuesday, March 19, 2019 4:40 PM
To: Long, Thomas <Long.Thomas@epa.gov>
Cc: George, Ingrid <George.Ingrid@epa.gov>
Subject: ETo Canister sampling

Tom,
Tiffany's work was done by Enthalpy (https://enthalpy.com/), analysis contracted by Jacobs (Preston is who she works with). They are local, provided the canisters per specific details and the canisters were delivered back to them for analysis. Peter Kariher is engaged in the details of this analysis work and specifically requested silco coated canisters and sample lines (https://www.restek.com/catalog/view/43681) be used. For some reason I thought that Parikshit was your dyno coordinator for the Jacobs, after calling him, he corrected me and explained the Craig is your Jacobs coordinator. I explained what was needed to Parikshit and he was going to pass on to Craig. Tiffany remembers that the cost was around $500 each. The sampling strategy needs to include blanks, spiked samples if possible and enough canisters to represent the sampling effort. Ingrid is not see her attempts to also conduct Eto canister analysis because she does not have a standard, has not worked out the details associated with the analysis, all of which will take much more time than two weeks.

Additional complications is the fact that the Jacobs contract has to be restarted at the end of the month. What about using your Jacob's WA to do this analysis, I am sure that the money can be worked out some how. Maybe we can get this analysis done with a purchase card, spoke to Sue and this is on the raged edge acceptable? Maybe the testing would need to be done the first week of April, beginning of the new Jacobs contract. Another detail discussed with

Tiffany's project, the also had CO2 content of the canister analyzed. This additional CO2 analysis gives a good idea of the dilution at the point of sample collection.

Talk to Craig and let us discuss tomorrow. We also need to discuss the QA implications here. Richard

Message

From: Kariher, Peter [Kariher.Peter@epa.gov]
Sent: 7/25/2019 3:18:59 PM
To: Long, Thomas [Long.Thomas@epa.gov]
CC: Snow, Richard [Snow.Richard@epa.gov]; Faircloth, James [Faircloth.James@epa.gov]
Subject: RE: Spikes

That is correct. I used the same diluter(MFCs), gas standards, and ultra pure air cylinder for all three spikes. Yes, the vacuum is from the gauge on the Enthalpy controller.

I'm getting ready to start making direct measurements of the EtO gas cylinder standards using the MKS FTIR. I will be making measurements for EtO and SF6 to get the relative ratios. This is to look at gas stability in the cylinders over time. We have 8 bottles here from different vendors to characterize.

Peter

From: Long, Thomas
Sent: Thursday, July 25, 2019 8:31 AM
To: Kariher, Peter <Kariher.Peter@epa.gov>
Cc: Snow, Richard <Snow.Richard@epa.gov>; Faircloth, James <Faircloth.James@epa.gov>
Subject: Spikes

Peter,

Can you confirm whether you used the same bottle and flow controller for all three of your spikes? The vacuums you logged were taken off of the pressure gage that came with the critical flow orifice? Thanks.

Thomas Long, Mechanical Engineer
Mail Drop E343-02
Building D Room 360
109 T. W. Alexander Drive
Research Triangle Park, NC 27711
Phone: 919-541-3944

Message

From: Hoyer, Marion [/O=EXCHANGELABS/OU=EXCHANGE ADMINISTRATIVE GROUP (FYDIBOHF23SPDLT)/CN=RECIPIENTS/CN=8DCDB076983049369A80F430A9F1D067-HOYER, MARION]
Sent: 12/19/2019 4:19:24 PM
To: Cullen, Angela [cullen.angela@epa.gov]
Subject: RE: Planned EtO work for RTP in April

Sorry, yes, I didn't focus on this clearly and got it mixed up with Rich's question on the canisters from Enthalpy and him needing a quick turnaround on that.

I had honestly thought ORD was going to have to take a break in testing while they recruited, but it sounds like Faircloth would be doing this work with their contractor. We need to understand whether they would need any more $ from us (I don't think we have any more money to send them, and it doesn't make sense to do that while we figure out a second method – do you agree?). I will ask Rebecca Dodder that question.

If they have money from ORD for additional testing, then it could be useful to work with them as long as you feel we are getting data from them that helps inform the remaining questions, which we have many of I think. Or do we need to wait for answers from the work we have ongoing here before we can plan something additional that would be informative?

Just a thought - if they are working on their own $ it could also be good to have the lab up and running when Tiffany has a new method so she can try it in the dyno facility and we could potentially get some side-by-side testing. Tiffany let me know she has good news for us in January on the methods development front. I'll get a meeting on the calendar for us.

From: Cullen, Angela <cullen.angela@epa.gov>
Sent: Thursday, December 19, 2019 10:39 AM
To: Hoyer, Marion <hoyer.marion@epa.gov>
Subject: FW: Planned EtO work for RTP in April

I thought we discussed not planning any dyno testing at RTP for now? Too many things are up in the air and depend on the outcome of the four sets of testing here at NVFEL and the development of Kat's method. Did you think we should have testing planned there?

From: Baldauf, Richard <Baldauf.Richard@epa.gov>
Sent: Wednesday, December 18, 2019 10:50 AM
To: Cullen, Angela <cullen.angela@epa.gov>; Hoyer, Marion <hoyer.marion@epa.gov>
Cc: Faircloth, James <Faircloth.James@epa.gov>; Klavon, Patty <Klavon.Patty@epa.gov>
Subject: RE: Planned EtO work for RTP in April

Hi all,

Just wanted to make sure you saw this and check in if you thoughts. Again, I'll really have to finalize everything that first week in Jan because of TRB, so the sooner the better. If that's not feasible, if you can get me an estimate on when you might have some info for me, that would be great

Thanks

From: Baldauf, Richard
Sent: Monday, December 16, 2019 2:15 PM
To: Cullen, Angela <cullen.angela@epa.gov>; Hoyer, Marion <hoyer.marion@epa.gov>

Cc: Faircloth, James <Faircloth.James@epa.gov>; Klavon, Patty <Klavon.Patty@epa.gov>
Subject: Planned EtO work for RTP in April

Hi all,

I wanted to see if you all had been thinking about potential work in RTP on EtO after the current work is complete at the end of March. As a reminder, we'll be starting a new task order contract on that date. I've got to start writing up the TO's and have them in by mid-Jan, so we will be better off to have any plans in right away. We can talk about this with the next project report, but I wanted to let you start thinking about that now

Thanks

Rich

Message

From: Hoyer, Marion [/O=EXCHANGELABS/OU=EXCHANGE ADMINISTRATIVE GROUP (FYDIBOHF23SPDLT)/CN=RECIPIENTS/CN=8DCDB076983049369A80F430A9F1D067-HOYER, MARION]
Sent: 7/3/2019 3:44:16 PM
To: Baldauf, Richard [Baldauf.Richard@epa.gov]
Subject: RE: update on EtO cross-office coordination

And of course it will be interpreted more broadly than for that sole purpose..... if not by us then by others, which is why we'll need to be looking at it from the gradient perspective..... Tiffany asked what the limitation was to doing longer term monitoring (money or what) and Ingrid tried to clarify this was limited on purpose.....

From: Baldauf, Richard
Sent: Wednesday, July 03, 2019 10:11 AM
To: Hoyer, Marion <hoyer.marion@epa.gov>
Subject: RE: update on EtO cross-office coordination

Thanks so much for sending. I know Ingrid had rattled off a number of sample types she wanted to do for methods development, and that was one. But I do think it's just for methods development

From: Hoyer, Marion
Sent: Wednesday, July 03, 2019 9:46 AM
To: Baldauf, Richard <Baldauf.Richard@epa.gov>
Subject: FW: update on EtO cross-office coordination

This highlight to Bill and Kathryn below is the major new info we learned in the call yesterday on EtO. We'll talk about it more Monday July 8 at 11am (its on your calendar).

Also, Ingrid talked about taking 3-mo of NR monitoring data in RTP this summer/early fall – sounds like it is just for methods development work??? Do you know about this?

From: Hoyer, Marion
Sent: Wednesday, July 03, 2019 6:39 AM
To: Sargeant, Kathryn <sargeant.kathryn@epa.gov>; William Charmley (charmley.william@epa.gov) <charmley.william@epa.gov>; Nelson, Brian <nelson.brian@epa.gov>; Michael Olechiw (olechiw.michael@epa.gov) <olechiw.michael@epa.gov>; Cook, Rich <Cook.Rich@epa.gov>
Cc: Cullen, Angela <cullen.angela@epa.gov>
Subject: FW: update on EtO cross-office coordination

Angela and I participated in a cross-office (OAR/ORD) meeting on EtO yesterday; topics included: sample collection and analysis for EtO, source tesing and ambient monitoring. There is one important take-away to highlight and we can discuss it later.

There appears to be general agreement in ORD and OAQPS that measurement methods for EtO in exhaust are currently immature (including the TO15 method) and that quantitative source measurements for EtO will not be trusted until there are sufficient cross-lab and cross-method comparisons that give us robust quantitative measures of EtO. This would include all of the full development and proving out steps that a new method undergoes (e.g., studies of sample loss at all stages of collection and analysis, potential for EtO formation after collection, interferences in sample matrices as well as during analysis, etc, etc.). Therefore, their focus is solely on methods development at this point in time.

This is the reason that OAQPS and ORD have not applied any of the current methods to test for the presence of EtO in other combustion sources. The NRMRL diesel genset testing was even more preliminary than I think we realized, and it

seems maybe the request from OAQPS for mobile source testing was potentially not informed by the nascent status of the canister samples and GC analysis of EtO.

Angela and I will be meeting further with a subset of key staff in OAQPS and ORD to understand what they do and don't trust especially with regard to the samples NRMRL is collecting and Enthalpy's analysis. We can report back, but we both felt this was new and different from what we'd previously understood and we wanted you to know ASAP. This also certainly informs what & when we will be ready to talk about our data publicly.

Message

From: Hoyer, Marion [/O=EXCHANGELABS/OU=EXCHANGE ADMINISTRATIVE GROUP (FYDIBOHF23SPDLT)/CN=RECIPIENTS/CN=8DCDB076983049369A80F430A9F1D067-HOYER, MARION]
Sent: 11/6/2019 9:59:39 PM
To: Cullen, Angela [cullen.angela@epa.gov]
Subject: RE: ACTION by 11/12: SLT Backgrounder on EtO
Attachments: Ethylene Oxide and Mobile Sources status for SLT Nov 2019 AC MH.docx

Hi, I agree wth you and the new section is perfect. The only thing I did was to change the title of the section on Background EtO (I didn't use track changes) and I put back in the information about Steregenics testing to provide context for the additional urgency/need for our more robust and definitive work.

If you are ok with this, do you want to have Brusstar review it or let Kathryn handle all that – either way is absolutely great by me.

From: Cullen, Angela <cullen.angela@epa.gov>
Sent: Wednesday, November 06, 2019 3:56 PM
To: Hoyer, Marion <hoyer.marion@epa.gov>
Subject: FW: ACTION by 11/12: SLT Backgrounder on EtO

Marion,

I do think we should add some information because the testing here will have cross-divisional impacts. TATD will need to spend some money and FTE for the NIOSH method, TATD will have to conduct testing which may impact CD's testing in the cells, and we need to spend ASD money. I added a "Mobile Source Evaluation" section to the bottom of the document that Kathryn sent out initially. It's rough, but I wanted to get your thoughts before I spent too much time with it.

Thanks,
Angela

From: Sargeant, Kathryn <sargeant.kathryn@epa.gov>
Sent: Wednesday, November 06, 2019 3:26 PM
To: Hoyer, Marion <hoyer.marion@epa.gov>; Cullen, Angela <cullen.angela@epa.gov>
Subject: ACTION by 11/12: SLT Backgrounder on EtO

The SLT is having a retreat Nov. 20-21 and has requested 1-2 page background read-ahead materials on several topics. The purpose is to provide basic information sharing about what the work is and any schedules that apply for the attendees of the retreat, for situational awareness.

One of the topics they've requested is ethylene oxide.

The one-pager you developed for Sarah (attached) is obviously great for this purpose, but I don't know if there's anything more you'd want to add specifically related to work OTAQ will be doing in the next year or its timing? If you want to add something, do you think we should coordinate it with Brusstar? (He was copied on the overall request so he'd have the context.)

This due to Lee on 11/14. If we add stuff, we might need to run it by Bill (and Brusstar?) first—I'm willing to do this, if you think it needs his review.
If you give it to me by COB 11/12, I can take care of that.

If you think it's good as is, just let me know, and I'll take care of it from here.

Thanks! Let me know if you have any questions.

Internal and Deliberative. Not for Distribution.

Ethylene Oxide (EtO) & Potential Role of Mobile Sources

November 2019

In 2016, ORD finalized an evaluation of the cancer risk from inhalation of ethylene oxide (EtO), concluding:

- EtO is carcinogenic to humans by the inhalation route of exposure
  - Cancers include cancers of the white blood cells (such as non-Hodgkin's lymphoma, myeloma and lymphocytic leukemia) and breast cancer in females.

- The concentration leading to a one hundred-in-a-million cancer risk from inhalation of EtO is 0.02 ug/m^3

Air monitoring

- Limited air monitoring data from 18 sites in nine states in areas not clearly linked to an industrial source, average EtO concentrations appear to be in the range of 0.1 to 0.3 ug/m^3
  - These background concentrations are well above the one hundred-in-a-million risk level, the level that EPA generally considers to be the upper limit of acceptable risk.

Background sources of EtO

- There are many data gaps in key scientific areas, particularly with regard to identifying the potential for sources other than the known industrial sources of EtO.

- While some preliminary studies from 50 to 60 years ago with now-obsolete engine technology or combustion simulation methods suggested that EtO oxide may be a by-product of engine combustion, this work used outdated measurement methods with significant uncertainties.

- A company that uses EtO, Sterigenics, submitted a white paper to EPA on May 10, 2019 that purports the following (the methods used are not provided and there has been no peer-review of the results):
  - EtO was apparently identified upstream of the catalyst of a diesel engine and in the exhaust from a gasoline-powered lawn mower, among other sources such as propane grills and wood-burning stoves. Sterigenics testing of a gasoline vehicle pre- and post-catalyst and a diesel truck post-catalyst suggested the EtO emissions were below the minimum detection limit.
  - They estimate EtO inventories and claim mobile sources are among the highest contributors to EtO in counties in the Chicago metro area.

- ORD and OAR are working to develop test methods that will allow us to carefully evaluate combustion sources, including mobile sources, to determine the extent to which ethylene oxide may be emitted.
    - We are actively testing emissions from mobile sources, but until the test methods are established, we will not have reliable data to assess the amount of EtO that may be contributed from mobile sources.
    - Methods may require different and new approaches compared with ambient air measurements due to the complex composition and large variation of emissions from mobile sources.
    - With ongoing support from ORD, we anticipate a more definitive evaluation of the potential for mobile sources to contribute to ambient levels of EtO by mid-2020.

Mobile Source Evaluations

- In 2019, we conducted testing on two gasoline light-duty vehicles, one gasoline heavy-duty vehicle, and one diesel heavy-duty vehicle at ORD using EPA Method TO-15 (summa canisters). Many lessons have been learned, which are being used to improve the sampling and analysis methods throughout the testing.
- We have initiated a cross-divisional effort to conduct EtO measurements at NVFEL in 2020 FY.
    - We plan to test a nonroad gasoline engine, light-duty vehicle, and heavy-duty vehicle using the EPA Method TO-15, with a focus on improving the proportionality of the samples.
    - In parallel, we are developing a new test method, a NIOSH monitoring method, to measure EtO from exhaust. The following are two of the primary goals associated with the development of the NIOSH method.
        - Validation of the measurements of EtO emissions using two separate methods.
        - The NIOSH method of sampling and analysis of EtO emissions can be done at NVFEL and at a lower cost than the EPA Method TO-15 measurements.

Message

From: Hoyer, Marion [/O=EXCHANGELABS/OU=EXCHANGE ADMINISTRATIVE GROUP (FYDIBOHF23SPDLT)/CN=RECIPIENTS/CN=8DCDB076983049369A80F430A9F1D067-HOYER, MARION]
Sent: 7/3/2019 1:47:28 PM
To: Sargeant, Kathryn [sargeant.kathryn@epa.gov]; William Charmley (charmley.william@epa.gov) [charmley.william@epa.gov]; Nelson, Brian [nelson.brian@epa.gov]; Michael Olechiw (olechiw.michael@epa.gov) [olechiw.michael@epa.gov]; Cook, Rich [Cook.Rich@epa.gov]
CC: Cullen, Angela [cullen.angela@epa.gov]
Subject: RE: update on EtO cross-office coordination

I should have mentioned that Bruce Kolowich and Kat Loftis were in this meeting with Angela and I. Also for OTAQ, Joe McDonald was on the line.

From: Hoyer, Marion
Sent: Wednesday, July 03, 2019 6:39 AM
To: Sargeant, Kathryn <sargeant.kathryn@epa.gov>; William Charmley (charmley.william@epa.gov) <charmley.william@epa.gov>; Nelson, Brian <nelson.brian@epa.gov>; Michael Olechiw (olechiw.michael@epa.gov) <olechiw.michael@epa.gov>; Cook, Rich <Cook.Rich@epa.gov>
Cc: Cullen, Angela <cullen.angela@epa.gov>
Subject: FW: update on EtO cross-office coordination

Angela and I participated in a cross-office (OAR/ORD) meeting on EtO yesterday; topics included: sample collection and analysis for EtO, source tesing and ambient monitoring. There is one important take-away to highlight and we can discuss it later.

There appears to be general agreement in ORD and OAQPS that measurement methods for EtO in exhaust are currently immature (including the TO15 method) and that quantitative source measurements for EtO will not be trusted until there are sufficient cross-lab and cross-method comparisons that give us robust quantitative measures of EtO. This would include all of the full development and proving out steps that a new method undergoes (e.g., studies of sample loss at all stages of collection and analysis, potential for EtO formation after collection, interferences in sample matrices as well as during analysis, etc, etc.). Therefore, their focus is solely on methods development at this point in time.

This is the reason that OAQPS and ORD have not applied any of the current methods to test for the presence of EtO in other combustion sources. The NRMRL diesel genset testing was even more preliminary than I think we realized, and it seems maybe the request from OAQPS for mobile source testing was potentially not informed by the nascent status of the canister samples and GC analysis of EtO.

Angela and I will be meeting further with a subset of key staff in OAQPS and ORD to understand what they do and don't trust especially with regard to the samples NRMRL is collecting and Enthalpy's analysis. We can report back, but we both felt this was new and different from what we'd previously understood and we wanted you to know ASAP. This also certainly informs what & when we will be ready to talk about our data publicly.

Message

From: Hoyer, Marion [/O=EXCHANGELABS/OU=EXCHANGE ADMINISTRATIVE GROUP (FYDIBOHF23SPDLT)/CN=RECIPIENTS/CN=8DCDB076983049369A80F430A9F1D067-HOYER, MARION]
Sent: 12/16/2019 11:14:31 PM
To: Yelverton, Tiffany [Yelverton.Tiffany@epa.gov]; Weinstock, Lewis [Weinstock.Lewis@epa.gov]
Subject: FW: EtO Tailpipe emissions question

Hi Lew and Tiffany,

We were asked today by the OAR front office to provide info on any action OTAQ is taking to address EtO for an Administrator meeting on Wednesday with the Illinois delegation.

I was out of the office when the request came in and folks replied wth the information below that is essentially the same as the summary info I shared with you a few months ago. Just wanted you to know and if you have any concerns LMK.

- Regarding **Mobile Sources** - EPA experts in the Office of Research and Development (ORD) and at the OAR National Vehicle and Fuel Emissions Laboratory in Ann Arbor are working to develop test methods that will allow EPA to carefully evaluate combustion sources, including mobile sources, to determine the extent to which ethylene oxide may be emitted.
  - We are actively testing emissions from mobile source engines and vehicles, but until the test methods are established, we will not have reliable data to assess the amount of EtO that may be contributed from mobile sources.
  - Methods may require different and new approaches compared with ambient air measurements due to the complex composition and large variation of emissions from mobile sources.
  - We anticipate EPA may be able to begin to answer specific questions regarding the potential for mobile sources to contribute to ambient levels of EtO by mid-2020.

Thanks,
Marion

Testing Mobile Sources for Ethylene Oxide

- Initial testing for presence of ethylene oxide in exhaust from on-road vehicles
  - Light-duty gasoline vehicle
    - Compliant with Tier 3 standards, high production model
  - Heavy-duty diesel truck
    - Compliant with 2010 standards: includes diesel particulate filter and selective catalytic reduction aftertreatment
  - Testing is being performed at EPA Office of Research and Development
    - Gasoline vehicle testing is complete, results expected any day
    - Testing with the diesel trucks has not started
  - OAR will communicate test results and progress on additional research to the Regions at the biweekly coordination call
- Next steps will be informed by results of these initial tests
  - We may need to test additional vehicles and on-road technologies
  - We plan to test some nonroad engines
  - We may need lower detection limits for source samples

Message

From: Hoyer, Marion [/O=EXCHANGELABS/OU=EXCHANGE ADMINISTRATIVE GROUP (FYDIBOHF23SPDLT)/CN=RECIPIENTS/CN=8DCDB076983049369A80F430A9F1D067-HOYER, MARION]
Sent: 12/16/2019 11:03:52 PM
To: Sargeant, Kathryn [sargeant.kathryn@epa.gov]; Cullen, Angela [cullen.angela@epa.gov]; Charmley, William [charmley.william@epa.gov]
CC: Brusstar, Matt [brusstar.matt@epa.gov]
Subject: RE: EtO Tailpipe emissions question

This looks good to me too. I will share this with OAQPS and ORD for their awareness.

From: Sargeant, Kathryn <sargeant.kathryn@epa.gov>
Sent: Monday, December 16, 2019 3:50 PM
To: Cullen, Angela <cullen.angela@epa.gov>; Charmley, William <charmley.william@epa.gov>; Hoyer, Marion <hoyer.marion@epa.gov>
Cc: Brusstar, Matt <brusstar.matt@epa.gov>
Subject: RE: EtO Tailpipe emissions question

Me, too.

From: Cullen, Angela <cullen.angela@epa.gov>
Sent: Monday, December 16, 2019 3:50 PM
To: Charmley, William <charmley.william@epa.gov>; Sargeant, Kathryn <sargeant.kathryn@epa.gov>; Hoyer, Marion <hoyer.marion@epa.gov>
Cc: Brusstar, Matt <brusstar.matt@epa.gov>
Subject: RE: EtO Tailpipe emissions question

Looks good to me

From: Charmley, William <charmley.william@epa.gov>
Sent: Monday, December 16, 2019 3:43 PM
To: Cullen, Angela <cullen.angela@epa.gov>; Sargeant, Kathryn <sargeant.kathryn@epa.gov>; Hoyer, Marion <hoyer.marion@epa.gov>
Cc: Brusstar, Matt <brusstar.matt@epa.gov>
Subject: RE: EtO Tailpipe emissions question

I made a few changes, since this is for the Administrator, as background for a meeting he will have with outside stakeholders. Please let me know what you think;

- Regarding **Mobile Sources** - EPA experts in the Office of Research and Development (ORD) and at the OAR National Vehicle and Fuel Emissions Laboratory in Ann Arbor are working to develop test methods that will allow EPA to carefully evaluate combustion sources, including mobile sources, to determine the extent to which ethylene oxide may be emitted.
  - We are actively testing emissions from mobile source engines and vehicles, but until the test methods are established, we will not have reliable data to assess the amount of EtO that may be contributed from mobile sources.
  - Methods may require different and new approaches compared with ambient air measurements due to the complex composition and large variation of emissions from mobile sources.

- We anticipate EPA may be able to begin to answer specific questions regarding the potential for mobile sources to contribute to ambient levels of EtO by mid-2020.

From: Cullen, Angela <cullen.angela@epa.gov>
Sent: Monday, December 16, 2019 1:17 PM
To: Sargeant, Kathryn <sargeant.kathryn@epa.gov>; Charmley, William <charmley.william@epa.gov>; Hoyer, Marion <hoyer.marion@epa.gov>
Cc: Brusstar, Matt <brusstar.matt@epa.gov>
Subject: RE: EtO Tailpipe emissions question

Kathryn's bullet points are the most recent.

From: Sargeant, Kathryn <sargeant.kathryn@epa.gov>
Sent: Monday, December 16, 2019 12:47 PM
To: Charmley, William <charmley.william@epa.gov>; Hoyer, Marion <hoyer.marion@epa.gov>; Cullen, Angela <cullen.angela@epa.gov>
Cc: Brusstar, Matt <brusstar.matt@epa.gov>
Subject: RE: EtO Tailpipe emissions question

Marion is out this afternoon.

I believe this is the most recent communications text we've drafted (Angela, please weigh in).

- ORD and OAR are working to develop test methods that will allow us to carefully evaluate combustion sources, including mobile sources, to determine the extent to which ethylene oxide may be emitted.
  - We are actively testing emissions from mobile sources, but until the test methods are established, we will not have reliable data to assess the amount of EtO that may be contributed from mobile sources.
  - Methods may require different and new approaches compared with ambient air measurements due to the complex composition and large variation of emissions from mobile sources.
  - With ongoing support from ORD, we anticipate a more definitive evaluation of the potential for mobile sources to contribute to ambient levels of EtO by mid-2020.

From: Charmley, William <charmley.william@epa.gov>
Sent: Monday, December 16, 2019 12:42 PM
To: Sargeant, Kathryn <sargeant.kathryn@epa.gov>; Hoyer, Marion <hoyer.marion@epa.gov>; Cullen, Angela <cullen.angela@epa.gov>
Cc: Brusstar, Matt <brusstar.matt@epa.gov>
Subject: Fwd: EtO Tailpipe emissions question

Marion and Angela

Can you draft a few bullet points that summarizes the work OTAQ and ORD have been doing regarding method development for mobile source measurement methods for ethylene oxide, which we will then use to help us characterize EtO emissons from mobile sources.

Thanks
Bill

Begin forwarded message:

From: "Hengst, Benjamin" <Hengst.Benjamin@epa.gov>
Date: December 16, 2019 at 12:07:15 PM EST
To: "Charmley, William" <charmley.william@epa.gov>, "Sargeant, Kathryn" <sargeant.kathryn@epa.gov>
Cc: "Dunham, Sarah" <Dunham.Sarah@epa.gov>, "Burch, Julia" <Burch.Julia@epa.gov>, "Cook, Leila" <cook.leila@epa.gov>
Subject: Fwd: EtO Tailpipe emissions question

Bill, Kathryn—please see below and let me know what you think. Thanks. Ben

Begin forwarded message:

From: "Cory, Preston" <Cory.Preston@epa.gov>
Date: December 16, 2019 at 12:03:48 PM EST
To: "Hengst, Benjamin" <Hengst.Benjamin@epa.gov>
Cc: "Burch, Julia" <Burch.Julia@epa.gov>, "Mroz, Jessica" <mroz.jessica@epa.gov>
Subject: EtO Tailpipe emissions question

Hi Ben,

I am wondering who in OTAC could provide info on any action OTAC is taking to address EtO. The Administrator has a meeting on Wednesday with the Illinois delegation, and he asked me to track down any action y'all are taking to address EtO tailpipe emissions, etc. Who is the best person on your team to provide this information? If he or she could fill in a few bullets on the higlighed portion below, that would be terrific! Tight timeline here...will need by COB if at all possible.

STATUS OF EPA'S WORK ON ETO:

OAR Immediate Office:

EPA is taking a **two-pronged approach** to address ethylene oxide emissions, including reviewing Clean Air Act regulations for industrial facilities that emit ethylene oxide:

1. On **November 1st**, the agency issued proposed amendments to its air toxics emissions standards for miscellaneous organic chemical manufacturing (often referred to as the MON).
   - The proposed amendments would reduce ethylene oxide emissions from this source category by approximately 10 tons per year.
   - The proposal is scheduled to publish in the Federal Register on **December 17th**.
   - Two public hearings are currently scheduled: the first on January 14th in Houston, TX and the second on January 16th in Washington, DC.

2. On **December 5th** the agency issued an Advance Notice of Proposed Rulemaking (ANPRM) to solicit information from industry and the public on a potential future rulemaking to further reduce EtO from commercial sterilization and fumigation operations.
   - In conjunction with the ANPRM the agency also solicited nominations for representatives for small entities that may be subject to a future rulemaking to advise a Small Business Advocacy Review Panel.
   - And, on December 10th, we issued a request for information under CAA section 114 to gather information from several commercial sterilization companies on facility characteristics, control devices, work practices and costs for emission reductions.

- EPA hopes to finalize this rulemaking by in **spring 2020**: note that this timeline allows for EPA to gather a comprehensive data set that will ensure our rulemaking is defensible and allow for compliance with new control technology. We are issuing an ANPRM instead of an NPRM because we lack sufficient data collection to issue an NPRM at this time.

OAR OTAC:

ORD:

Thank you!
Preston

Message

From: Hoyer, Marion [/O=EXCHANGELABS/OU=EXCHANGE ADMINISTRATIVE GROUP (FYDIBOHF23SPDLT)/CN=RECIPIENTS/CN=8DCDB076983049369A80F430A9F1D067-HOYER, MARION]
Sent: 10/9/2019 12:31:48 AM
To: Sargeant, Kathryn [sargeant.kathryn@epa.gov]; Cook, Rich [Cook.Rich@epa.gov]; Moltzen, Michael [Moltzen.Michael@epa.gov]; Bailey, Chad [bailey.chad@epa.gov]
Subject: RE: ACTION by 2 pm Weds: agenda items for A-E quarterly call on Thurs.

Tiffany Yelverton called today about EtO research and she said Bryan Hubbell is scheduling a meeting with OAQPS on EtO research needs and priorities. I let her know that we'll be looking to get added to that meeting and she is working it on her end too. I think we should inquire in this meeting Thurs about ongoing plans and prioritization of EtO needs.

One of Tiffany's questions is whether OTAQ has specific deadlines by which we need EtO measurement data. I told her we'd talk, but that currently there is simply the urgent need for methods to measure combustion sources generally and that the priority of this need should consider mobile sources and of course the implications for our short- and long-term need for the dyno facility. Let me know if you think there are specific deadlines for EtO research we should articulate to ORD.

From: Sargeant, Kathryn <sargeant.kathryn@epa.gov>
Sent: Tuesday, October 08, 2019 1:32 PM
To: Cook, Rich <Cook.Rich@epa.gov>; Moltzen, Michael <Moltzen.Michael@epa.gov>; Hoyer, Marion <hoyer.marion@epa.gov>; Bailey, Chad <bailey.chad@epa.gov>
Subject: ACTION by 2 pm Weds: agenda items for A-E quarterly call on Thurs.
Importance: High

We have a quarterly call with Hubbell et al. on Thurs. No one from ORD has pinged me yet for agenda items (with Beth H-S gone, no one may be doing that), but I thought I'd be proactive in getting us thinking about it.

Now that we have revised/"final" RACT documents from some of the research areas, are there remaining things to talk/ask about?
Do we want to talk any further about UFP? EtO? The dyno facilities overall?

The aircraft team wants us to pursue the issue of John Kinsey's equipment.
Anything else on our minds? R2PIER, KC-TRAQS, STAR grants, etc?

Let me know by 2 pm Weds and we can compile (and share, as appropriate, w/ORD)

Message

From: Hoyer, Marion [/O=EXCHANGELABS/OU=EXCHANGE ADMINISTRATIVE GROUP (FYDIBOHF23SPDLT)/CN=RECIPIENTS/CN=8DCDB076983049369A80F430A9F1D067-HOYER, MARION]
Sent: 10/16/2019 3:03:39 PM
To: Weinstock, Lewis [Weinstock.Lewis@epa.gov]
Subject: RE: nnto - did you get the green light for Friday release
Attachments: Ethylene Oxide and Mobile Sources status Oct 2019.docx

I can't remember if I recently sent you this pager on where we are with mobile testing (why its important, status). We are going to send it to Sarah tomorrow with context for sharing it with Anne.

Let me know if we've inserted anything in here that you want changed.

From: Weinstock, Lewis <Weinstock.Lewis@epa.gov>
Sent: Wednesday, October 16, 2019 8:26 AM
To: Hoyer, Marion <hoyer.marion@epa.gov>
Subject: RE: nnto - did you get the green light for Friday release

Just found out from Alison – it's a go – Close hold information. More details will be released by OPA tomorrow and the communications plan will be put into effect.

LW

From: Hoyer, Marion <hoyer.marion@epa.gov>
Sent: Wednesday, October 16, 2019 8:00 AM
To: Weinstock, Lewis <Weinstock.Lewis@epa.gov>
Subject: nnto - did you get the green light for Friday release

Update on Ethylene Oxide for Bill
April 17, 2019

1) New source testing information from Sterigenics (from Ed March 22)
   - Diesel engine without oxidation catalyst: 200 ug/m3 EtO, none detected after installing an oxidation catalyst
   - Lawn mower exhaust 75 ug/m3 EtO

   This information has not been released publicly, although Sterigenics continues to claim in their public materials that mobile sources emit EtO

   We have no information on the testing conditions, engines, etc. We know the lab used for analysis was ALS in California which OAQPS trusts to yield good results.

2) Update on EtO air concentrations in Meadowbrook area
   - OAQPS's continued monitoring and analysis of wind direction clearly indicates the Sterigenics plant is responsible for the high concentrations of EtO. Concentrations have decreased to background levels since the plant closed.
   - Evaluation of new data coming in from the National Air Toxics Trends sites and Urban Toxics Monitoring sites has started to suggest an urban background concentration of around 0.3 ug/m3.
     - There are many theories regarding the reason for these background levels (e.g., long atmospheric lifetime of this compound, multiple area sources, unidentified sources, etc). OAQPS is feeling and the hunt for additional sources is ongoing, thus the importance of mobile source testing.

3) Mobile Source Testing of EtO
   - ORD-NRMRL tested exhaust from a John Deere 4-cycle diesel generator without aftertreatment and found no ethylene oxide. This work was not conducted under a QAPP and cannot be published.

   - ORD-NRMRL
     - To obtain quick, exploratory data for gasoline- and diesel-vehicle exhaust, we opted for research at ORD's National Risk Research Lab where the LD and HD chassis dynos are operated.
     - The results of these initial studies (and data from other sources) will help inform further testing needs and/or specific research questions we might need to pursue (e.g., role of catalysts, role of potential ethylene glycol leak, etc.).
     - NRMRL is conducting this work under a QAPP and conducting the QA/QC needed to allow the results to be shared publicly.
     - The vehicles being tested (on chassis dynos):
       - LD GDI truck 2016 Ford F150 (has 5,600 miles)

- FTP cycle using Tier 3 cert fuel, triplicate tests
- Bag 1 collected into one canister, Bag 2 and 3 combined into a second canister
- Also collecting conditioned intake air and scrubbed dilution air
- Spiking one 'Bag 1' canister to evaluate recovery in sample matrix
- Collecting regulated pollutants and speciated hydrocarbons
- Sample analysis conducted at Enthalpy, a lab both OAQPS and ORD have used and trust for EtO analysis. Cost of analysis $15K, NRMRL is covering all costs for sample collection.
- NRMRL is also collecting samples to analyze in-house as part of their work to develop analysis capability in EPA

  - HD diesel sample collection will piggy back on the baseline testing being conducted for the HD NOx team (on a DD8 or Volvo initially)

- Status of discussions regarding conducting EtO testing at NVFEL

- SwRI remains an option for the future

4) Coordination and communication:
   - Coordination centralized in OAQPS
     - Meet every two weeks with Regions 2-8 and other program offices
     - ADD meeting May 7, session on EtO - OAQPS has asked OTAQ to contribute a slide or talking points on mobile source testing status

   - Communication around ORD's initial investigation with LD GDI and HD diesel
     - Bi-weekly status update meetings with ORD, OTAQ, OAQPS
     - Need to discuss communication of the initial results with OAQPS

   - Discussions with Ed Nam, R5 every 2-4 weeks, as needed

Message

From: Hoyer, Marion [/O=EXCHANGELABS/OU=EXCHANGE ADMINISTRATIVE GROUP (FYDIBOHF23SPDLT)/CN=RECIPIENTS/CN=8DCDB076983049369A80F430A9F1D067-HOYER, MARION]
Sent: 4/8/2019 12:44:02 PM
To: Long, Thomas [Long.Thomas@epa.gov]
CC: Cook, Rich [Cook.Rich@epa.gov]; Geidosch, Justine [Geidosch.Justine@epa.gov]
Subject: RE: EtO Analysis

Sounds good, thank so much!

From: Long, Thomas
Sent: Monday, April 08, 2019 8:44 AM
To: Hoyer, Marion <hoyer.marion@epa.gov>
Cc: Cook, Rich <Cook.Rich@epa.gov>; Geidosch, Justine <Geidosch.Justine@epa.gov>
Subject: RE: EtO Analysis

We'll have them quote with EtO, M3C, TO-15, and sensitivity analysis.

_____
Thomas Long, Mechanical Engineer
Mail Drop E343-02
Building D Room 360
109 T. W. Alexander Drive
Research Triangle Park, NC 27711
Phone: 919-541-3944

From: Hoyer, Marion
Sent: Monday, April 08, 2019 7:19 AM
To: Long, Thomas <Long.Thomas@epa.gov>
Cc: Cook, Rich <Cook.Rich@epa.gov>; Geidosch, Justine <Geidosch.Justine@epa.gov>
Subject: RE: EtO Analysis

We'll go with whatever you recommend. I agree it would be really helpful to get more than jus EtO and we can pay for a full TO-15 and inert gases.

Thanks Tom

From: Long, Thomas
Sent: Monday, April 08, 2019 6:56 AM
To: Hoyer, Marion <hoyer.marion@epa.gov>
Subject: EtO Analysis

Marion,

Did you need other compounds analyzed or only Ethylene oxide? Perhaps M3C inert gases and TO-15? They need to know in order to complete their quote. Thanks.

_____
Thomas Long, Mechanical Engineer
Mail Drop E343-02

Building D Room 360
109 T. W. Alexander Drive
Research Triangle Park, NC 27711
Phone: 919-541-3944

Message

From: Hoyer, Marion [/O=EXCHANGELABS/OU=EXCHANGE ADMINISTRATIVE GROUP (FYDIBOHF23SPDLT)/CN=RECIPIENTS/CN=8DCDB076983049369A80F430A9F1D067-HOYER, MARION]
Sent: 4/4/2019 10:42:46 PM
To: Sargeant, Kathryn [sargeant.kathryn@epa.gov]
CC: Cook, Rich [Cook.Rich@epa.gov]
Subject: RE: Ethylene oxide new info

Please see the draft note for Bill and Chris below. Rich – please chime in if I missed something we should note for them. I think we could provide this update with the previous email and/or document attached that we briefed him with previously.

Chris,

The ethylene oxide issues are evolving pretty rapidly and we are providing below some relevant updates on recent events. We will get on your calendar as soon as we have some information from the ORD dyno testing, or sooner, if you'd like.

New health and monitoring information:
The most concerning new piece of information is a study conducted by the Illinois Department of Public Health which reported that there are elevations in cancers in the Willowbrook area where the Sterigenics facility was causing very elevated concentration of ethylene oxide. Some of the increased cancer types are expected based on studies in occupationally exposed workers. The results were mixed however and the study authors are quick to point out that "no single study is likely to prove that a particular exposure definitively causes a particular disease. Cancer studies are inherently complex and in almost all cases the cause of a person's, or group of people's, cancers is difficult to determine." Further study is warranted and OAQPS is conducting a risk assessment for the Willowbrook area which is supposed to be completed by the end of May. Here is the link to the public IL DPH study:
http://www.dph.illinois.gov/news/idph-releases-cancer-assessment-area-surrounding-sterigenics-facility-0

With closure of the Sterigenics plant in Willowbrook, concentrations of ethylene oxide decreased significantly to a level that is now looking like it is potentially the national background level. OAQPS is monitoring concentrations of ~0.1-0.2 ug/m3 of this compound in even areas remote from the urban environment. Thus, the diligent search for other sources continues.

Mobile source testing:
ORD's samples from the diesel generator found NO ethylene oxide in the exhaust. Our folks (Chris Laroo, Justine Geidosch and others) trust the methods used and the results. However, this was a very preliminary test on one engine that was designed to look at potential loss of ethylene oxide in a source sample. The results cannot be released publicly because the sampling was conducted without a QAPP. ORD is only communicated the results to OAR verbally.

We are working with the NRMRL dyno staff who are aiming to collect samples from a light duty GDI soon and then a HD diesel truck. We are experiencing some delays, but hope to have very preliminary data within a month or so.

Communication:
OAQPS has pulled their monitoring center director, Lew Weinstock, into the OAQPS front office to lead the coordination and communication on ethylene oxide issues across EPA along with Alison David whom you probably know from the OAR communication staff. They have organized a meeting every two weeks so that we are staying well-coordinated in EPA; we are folded into those conversations as is Region 5 of course.

From: Sargeant, Kathryn
Sent: Tuesday, April 02, 2019 3:45 PM
To: Hoyer, Marion <hoyer.marion@epa.gov>; Cook, Rich <Cook.Rich@epa.gov>; Cullen, Angela <cullen.angela@epa.gov>; Laroo, Chris <laroo.chris@epa.gov>; Nelson, Brian <nelson.brian@epa.gov>; Olechiw, Michael <olechiw.michael@epa.gov>; Geidosch, Justine <Geidosch.Justine@epa.gov>; Baldauf, Richard <Baldauf.Richard@epa.gov>
Subject: RE: Ethylene oxide new info

Thanks so much, Marion. Definitely a lot going on; thank you for pursuing all these threads.
I see that we're on Bill's calendar for 4/17. Please let me know if you think there are developments that warrant an email to him (or Chris) before then.

Also, just wondering for my own clarification, when you mention the RARE grant to develop an "on-road monitoring system," what does that term mean? (e.g., near-road monitoring of on -road traffic? On-vehicle monitoring? A mobile monitoring platform?) sorry to be dense.

From: Hoyer, Marion
Sent: Tuesday, April 02, 2019 3:26 PM
To: Sargeant, Kathryn <sargeant.kathryn@epa.gov>; Cook, Rich <Cook.Rich@epa.gov>; Cullen, Angela <cullen.angela@epa.gov>; Laroo, Chris <laroo.chris@epa.gov>; Nelson, Brian <nelson.brian@epa.gov>; Olechiw, Michael <olechiw.michael@epa.gov>; Geidosch, Justine <Geidosch.Justine@epa.gov>; Baldauf, Richard <Baldauf.Richard@epa.gov>
Subject: Ethylene oxide new info

There is a lot of new information in this email, not all of which everyone needs to know, but in the interest of keeping us all close to the same page.....

First, wrt the docs attached: The 3MB file is a recently released study by the IL Dept of Public Health looking at the cancer incidence in people living near the Sterigenics facility compared with county cancer rates. The report found some statistically significant increased rates of cancer, particularly for women; these are consistent with the known cancer endpoints for this compound. This is a big deal and very worrying. The conclusion to the report is:
"The study's results, when taken as a whole, indicated that some cancers were elevated in populations living near the Sterigenics facility in Willowbrook, Illinois. Many apparent differences and inconsistences, however, existed between genders, across study areas, and among cancer sites. Further studies, preferably with larger populations and multiple facilities, are strongly recommended to confirm this assessment's findings."

Also attached is a one-pager from Sterigenics explaining their evaluation of the monitoring data. We have been told that Sterigenics has conducted source testing, including for mobile sources, but they have no released any data.

Lew Weinstock in OAQPS has been asked to form a 'national EtO communication group' with Alison Davis. They will hold monthly meetings to stay coordinated across offices and EPA Regions on this issue and I've asked to be included. I will also be keeping in touch with Lew (at his request) every two weeks so we can get updates on what is happening, what is being released and any other messages on which we need to be informed.

Some quick updates from my conversation with Lew today:
1 – Concentrations of EtO since closure of the Sterigenics plant have returned to what we now are understanding is potentially our national background: 0.1-0.2 ug/m3

2 – Data from the National Air Toxics Trends sites from the last 6 months indicates that even in very remote areas (e.g., a park in Kentucky with no anthropogenic sources within 100 miles of the monitor) monitors are measuring 0.1-0.2 ug/m3.
3 – OAQPS has a risk assessment underway to estimate the increased cancer risk in the population of Willowbrook from their exposure to EtO; it will be released at the end of May to the Willowbrook community
4 – the RARE grant with Region 5 to develop an on-road monitoring system for EtO is probably months away, but will be used to map out EtO levels near a wide range of potential sources
5 – OAQPS stopped monitoring in Willowbrook and they are now considering monitoring in RTP near a major roadway and in urban and suburban areas. I will keep up on this with Lew and Rich B, you might hear about this too and we'll be interested in any news you get.
6 – There was a public meeting last week on an unrelated issue, but as part of it EPA took comment on the IRIS EtO assessment. Lew said all public comments at the meeting were extremely negative toward EPA for taking comments on a finalized assessment that has gone through rigorous, thorough peer review.

As a reminder on mobile source exhaust testing:
1 – we get the results from NRMRL tomorrow morning on their genset testing
2 – NRMRL is trying to find an analytical lab so they can start the LDGV testing for EtO
3 – NRMRL testing of HD diesel truck is occuring in at least a couple of weeks if not longer

Appointment

From: Hoyer, Marion [/O=EXCHANGELABS/OU=EXCHANGE ADMINISTRATIVE GROUP (FYDIBOHF23SPDLT)/CN=RECIPIENTS/CN=8DCDB076983049369A80F430A9F1D067-HOYER, MARION]
Sent: 5/26/2019 8:04:05 PM
To: Cullen, Angela [cullen.angela@epa.gov]; Cook, Rich [Cook.Rich@epa.gov]; Fernandez, Antonio [fernandez.antonio@epa.gov]; Geidosch, Justine [Geidosch.Justine@epa.gov]; Laroo, Chris [laroo.chris@epa.gov]; Michael Olechiw (olechiw.michael@epa.gov) [olechiw.michael@epa.gov]
BCC: AA-Room-Office-S109-ConfRoom/AA-OTAQ-OFFICE [AA-Room-Office-S109-ConfRoom@epa.gov]

Subject: EtO planning meeting
Location: AA-Room-Office-S109-ConfRoom/AA-OTAQ-OFFICE

Start: 5/29/2019 4:00:00 PM
End: 5/29/2019 4:30:00 PM
Show Time As: Tentative

Required Attendees: Cullen, Angela; Cook, Rich; Fernandez, Antonio; Geidosch, Justine; Laroo, Chris; Michael Olechiw

This is an internal OTAQ meeting on ethylene oxide to:

- Re-orient to our current priorities
  - Understanding the Ford GDI results
    - Who is looking at the Enthalpy report from the F150 GDI and what have we learned so far?
    - ORD is planning to send test parameters from the vehicle testing cycles this week
  - Update on research plan in ORD
    - emissions test on F750 diesel this week
    - Discuss funding the ORD lab (Mike Hays/Ingrid George) to help them get their analytical instruments capable of EtO analysis ASAP
  - Update on discussions in NVFEL for nonroad and LDGV testing
    - Sending someone to ORD to be able to implement collection into Summa canisters in NVFEL

- Discuss how often we want to meet and who needs to be invited to these meetings; other ways to make sure we are keeping each other updated on events

If we have time, we can discuss the following, or we can cover this next week:

- Following up on the Sterigenics testing – meet with them to ask questions?
- Gain any insights / perspectives we can from the literature that OAQPS identified reporting EtO from mobile source combustion
  - ATSDR is using the 1959 study in their public fact sheet to claim mobile sources emit EtO

Message

From: Hoyer, Marion [/O=EXCHANGELABS/OU=EXCHANGE ADMINISTRATIVE GROUP (FYDIBOHF23SPDLT)/CN=RECIPIENTS/CN=8DCDB076983049369A80F430A9F1D067-HOYER, MARION]
Sent: 6/10/2019 5:40:43 PM
To: Long, Thomas [Long.Thomas@epa.gov]
CC: McDonald, Joseph [mcdonald.joseph@epa.gov]; Cullen, Angela [cullen.angela@epa.gov]
Subject: PFI testing

Hi Tom,

Ignore my voice mail on selecting the PFI to test for EtO. Angela reminded me that you were going to work with Joe McDonald to select a recent model year (Tier 2 or Tier 3), high sales volume, well maintained vehicle.

Let us know if you want to discuss this at the meeting next Wednesday.

I'll resend that meeting invitation so you can accept it.
Thanks,
Marion

Message

From: Hoyer, Marion [/O=EXCHANGELABS/OU=EXCHANGE ADMINISTRATIVE GROUP (FYDIBOHF23SPDLT)/CN=RECIPIENTS/CN=8DCDB076983049369A80F430A9F1D067-HOYER, MARION]
Sent: 9/26/2019 7:17:28 PM
To: Sargeant, Kathryn [sargeant.kathryn@epa.gov]; Cook, Rich [Cook.Rich@epa.gov]
CC: Davidson, Ken [Davidson.Ken@epa.gov]; Cullen, Angela [cullen.angela@epa.gov]
Subject: RE: EtO and mobile one pager for Sarah to communicate to Anne

We learned on the OAQPS-Region EtO call today that the NATTS data are not going to go public until the week of Oct 7 at the earliest. OAQPS requested a delay to have time to prep the States and there are other decisions that need to be made (webinar/no webinar, et).

We also found out that the document on "EPAs Work to Improve Understanding of Ethylene Oxide" is being edited so we need to keep track of that too and it would make sense to share that with Sarah when we send our pager on mobile.

So I think we should hold on the note to Sarah and I'll check back near the end of next week to let you know what I'm hearing from OAQPS.

FYI – Tony Fernandez offered a potential additional bullet for the mobile source pager for Sarah/Anne that might be too technically detailed, but I will work it into the email. His bullet is: "methods may require very different or new approaches as compared to ambient measurements due to very unique composition and large variation of emissions from mobile sources (gas, diesel, CNG, etc.)."

Matt Brusstar is reviewing the pager now.

From: Sargeant, Kathryn <sargeant.kathryn@epa.gov>
Sent: Thursday, September 26, 2019 8:41 AM
To: Hoyer, Marion <hoyer.marion@epa.gov>; Cook, Rich <Cook.Rich@epa.gov>
Cc: Davidson, Ken <Davidson.Ken@epa.gov>
Subject: RE: EtO and mobile one pager for Sarah to communicate to Anne

Yes, I'm comfortable with the new highlighted language, if that's the timing that you, Angela, et al. think is reasonable.

From: Hoyer, Marion <hoyer.marion@epa.gov>
Sent: Wednesday, September 25, 2019 2:11 PM
To: Sargeant, Kathryn <sargeant.kathryn@epa.gov>; Cook, Rich <Cook.Rich@epa.gov>
Cc: Davidson, Ken <Davidson.Ken@epa.gov>
Subject: RE: EtO and mobile one pager for Sarah to communicate to Anne

Lew just got in touch. The NATTS data are not going out on Friday. All he said is there is discomfort with the large set of uncertainties we have to explain (this info is fourth or fifth hand at this point).....

Lew also asked that in order to allay some concern on Anne's part, it would help to include a sentence about anticipated timing. I included this new bullet in yellow (and ran it by Angela):

- ORD and OTAQ are working to develop methods that will allow us to carefully evaluate combustion sources, including mobile sources, to determine if ethylene oxide is being emitted.

- Until the methods are established, we will not have sufficient data to confirm whether EtO is emitted by mobile sources.
- With ongoing support from ORD, we anticipate a more definitive evaluation of the potential for mobile sources to contribute to ambient levels of EtO by mid-2020.

Are you both ok with that?

I will get you a draft note Kathryn even thought the release date is uncertain; you can see what you think.

Ken – I forgot to include you earlier. This is FYI but if you have comments, let me know (for context, give me a call).

From: Sargeant, Kathryn <sargeant.kathryn@epa.gov>
Sent: Wednesday, September 25, 2019 12:51 PM
To: Cook, Rich <Cook.Rich@epa.gov>; Hoyer, Marion <hoyer.marion@epa.gov>
Subject: RE: EtO and mobile one pager for Sarah to communicate to Anne

Thanks, Marion. I like the one-pager, too. Will you give me some contextual words to use for the email to Sarah (when you think it's ready) because I'm planning for the context of this to be related to the release of the NATTS data.

I defer to you on Rich's question. Personally, I think the one-pager's point about the risk level is adequate, because the potency alone doesn't tell you what really matters (i.e., the risk). Plus, it's good on this to be as absolutely objective as possible, given people's doubts about the potency. But, I defer to you both—certainly we've said it in other briefings.

From: Cook, Rich <Cook.Rich@epa.gov>
Sent: Wednesday, September 25, 2019 12:47 PM
To: Hoyer, Marion <hoyer.marion@epa.gov>; Sargeant, Kathryn <sargeant.kathryn@epa.gov>
Subject: RE: EtO and mobile one pager for Sarah to communicate to Anne

I give it the big thumbs up. Not knowing a lot about Sarah's knowledge base, do we need to explain to her that 10-2 ug/m3 is a really high unit risk (maybe comparing to benzene)?

From: Hoyer, Marion <hoyer.marion@epa.gov>
Sent: Wednesday, September 25, 2019 12:44 PM
To: Sargeant, Kathryn <sargeant.kathryn@epa.gov>
Cc: Cook, Rich <Cook.Rich@epa.gov>
Subject: EtO and mobile one pager for Sarah to communicate to Anne

I left the pager for Sarah/Anne on your chairs. Angela has reviewed it and I incorporated her comment which was to fold the statement in a bullet under methods development.

Lots of people are out this week who we'd otherwise have review this (Laroo, Olechiw, Nelson). Tony F is reviewing it and I have previously spoken with Kat and Ned S (OAQPS) on this topic and they agree that we do not have the data to confirm EtO is in mobile exhaust. I also brought this up in the cross-office EtO coordination call last week and there was agreement that we need at least two methods (and consistent results) to confirm that mobile is a source of EtO.

I will get OAQPS review of this before you send it to Sarah.

Message

From: Hoyer, Marion [/O=EXCHANGELABS/OU=EXCHANGE ADMINISTRATIVE GROUP (FYDIBOHF23SPDLT)/CN=RECIPIENTS/CN=8DCDB076983049369A80F430A9F1D067-HOYER, MARION]
Sent: 3/4/2019 6:43:02 PM
To: Laroo, Chris [laroo.chris@epa.gov]; Geidosch, Justine [Geidosch.Justine@epa.gov]; Cook, Rich [Cook.Rich@epa.gov]; Cullen, Angela [cullen.angela@epa.gov]
CC: Sargeant, Kathryn [sargeant.kathryn@epa.gov]; Nelson, Brian [nelson.brian@epa.gov]; Michael Olechiw (olechiw.michael@epa.gov) [olechiw.michael@epa.gov]
Subject: FW: EtO Testing

Just some quick notes from our ASD conversation on testing for EtO from mobile sources.

Our short term goal is to conduct a screening-level indication of whether EtO is potentially being emitted by normally operating current on-road gas or diesel vehicles fueled by in-use gas and diesel. We need results as soon as possible, with minimal time spent in methods development. After we get results, we'll discuss additional questions we want or need to answer (e.g., is the small consumption of ethylene glycol promoting formation of EtO in combustion).

The dyno/engine and analysis lab options:

- NVFEL: Bruce will be working on developing a method for analysis of EtO in the coming months which will be useful in evaluating specific questions if we find EtO in our screening analyses. We have not sampled into canisters here, which limits our options to collect samples here and have them analyzed off-site.
- SwRI: We could pursue work at SwRI. We are sending a truck to SwRI in April, although they might have a pre-07 and post-2010 truck they could test now. SwRI has indicated they could analyze EtO, but they do not have a method on-line right now.
- ORD: ORD collects VOC into stainless steel canisters now, so no method development needed. Canisters could be shipped to a contract lab with known success at analyzing EtO. ORD has LD GDI testing planned for other purposes; we could potentially add the EtO canister collection and analysis. ORD's HD dyno is down and needs parts so potentially no quick turnaround on HDDT testing.
- Tiffany Yelverton in ORD is sending names of the 4 contractors who conduct the analysis of EtO from stainless steel canisters.

Priority order to consider for vehicle testing:

- LDDT – consider testing a light duty diesel truck with SCR since the system adequately represents HDDT combustion and aftertreatment. Test a LDDT with SCR first so we have data that provides a corollary to the genset testing being conducted in ORD
- LDGV – consider testing both a GDI and PFI to represent what is onroad now
- We need to further discuss testing a pre-2007 diesel engine or vehicle (to be informed by the genset testing in ORD)

Next Steps:

- Rich reached out to ORD-NRMRL (below) and we'll have a meeting with them after CRC. We need to ask if 1) they have a LDDT with SCR that they could test, 2) can they prioritize this EtO work ahead of other work, 3) would they want to attempt analysis of EtO in-house or send it out, 4) we'll need a cost estimate so we can get them $ soon, 5) --- what else?
- Someone needs to stay in touch with Bruce as his folks work on a method for EtO and to keep TATD abreast of our work with ORD (or SwRI if it turns out we need to pivot or change altogether). Justine – can you keep in touch with Bruce as necessary on both of these fronts?

What did I miss?

From: Long, Thomas
Sent: Monday, March 04, 2019 1:07 PM
To: Cook, Rich <Cook.Rich@epa.gov>; Shores, Richard <Shores.Richard@epa.gov>
Cc: Geidosch, Justine <Geidosch.Justine@epa.gov>; Hoyer, Marion <hoyer.marion@epa.gov>
Subject: RE: EtO Testing

Let's set something up for the week of the 18th. We'll be at CRC next week.

_____
Thomas Long, Mechanical Engineer
Mail Drop E343-02
Building D Room 360
109 T. W. Alexander Drive
Research Triangle Park, NC 27711
Phone: 919-541-3944

From: Cook, Rich
Sent: Monday, March 04, 2019 12:52 PM
To: Shores, Richard <Shores.Richard@epa.gov>; Long, Thomas <Long.Thomas@epa.gov>
Cc: Geidosch, Justine <Geidosch.Justine@epa.gov>; Hoyer, Marion <hoyer.marion@epa.gov>
Subject: EtO Testing

Richard and Tom –

We would like to have a more in depth discussion with you folks on what NRMRL might be able to do on the mobile source EtO characterization issue.

I know you mentioned you might be able to do something quick and dirty with a GDI LD truck you use for baseline testing, and with a Class 8 HD when you get the dyno back up.

We would like to talk about feasibility of maybe testing a non-GDI vehicle too, timeframe, possible cost and next steps.

Any chance we can have a conversation in the next week or so? If so, let me know dates and times when you might be available, NRMRL staff to include, and I can set something up.

Rich Cook
Health Effects, Benefits, and Air Toxics Center
Assessment and Standards Division
Office of Transportation and Air Quality
U. S. Environmental Protection Agency
(734)214-4827

Message

From: Hoyer, Marion [/O=EXCHANGELABS/OU=EXCHANGE ADMINISTRATIVE GROUP (FYDIBOHF23SPDLT)/CN=RECIPIENTS/CN=8DCDB076983049369A80F430A9F1D067-HOYER, MARION]
Sent: 9/26/2019 7:13:22 PM
To: Brusstar, Matt [brusstar.matt@epa.gov]
CC: Cullen, Angela [cullen.angela@epa.gov]
Subject: for your ok or edit
Attachments: Ethylene Oxide and Mobile Sources v1.docx

Message

From: Hoyer, Marion [/O=EXCHANGELABS/OU=EXCHANGE ADMINISTRATIVE GROUP (FYDIBOHF23SPDLT)/CN=RECIPIENTS/CN=8DCDB076983049369A80F430A9F1D067-HOYER, MARION]
Sent: 7/31/2019 12:40:13 PM
To: Weinstock, Lewis [Weinstock.Lewis@epa.gov]
Subject: RE: Coordination on EtO Source testing

Hi Lew,

Thanks for letting me know. It will juts be Kathryn and I on the phone and I doubt it will take an hour, but would be good to touch base on where things are with your public messaging (for the monitoring data rollout) and the other issues I'd mentioned previously.

One thing I wanted to hear Mike opine on is the pros/cons of getting together with Sterigenics to talk about the work they conducted testing sources. If it would be useful to Tiffany, Peter, Ned and those here who are invested in methods development, then maybe it would be worth it, but interested in your perspective.

Thanks,
Marion

From: Weinstock, Lewis <Weinstock.Lewis@epa.gov>
Sent: Wednesday, July 31, 2019 7:46 AM
To: Hoyer, Marion <hoyer.marion@epa.gov>
Subject: Coordination on EtO Source testing

Hi Marion:

I just talked with Mike and I don't think he will be able to make this call. Alison is also on travel so I'm not sure of her plans. I'll be on and can represent our views and plans as best that I can.

Lew

Subject: Coordination on EtO Source testing
Location: 1-202-991-0477 8908907#

Start: Wed 7/31/2019 10:00 AM
End: Wed 7/31/2019 11:00 AM

Recurrence: (none)

Meeting Status: Accepted

Organizer: Hoyer, Marion
Required Attendees: Koerber, Mike; Kathryn Sargeant; Weinstock, Lewis; Davis, Alison; Rich Cook

We'd like to talk about the status of source testing and communication of results.

Acknowledging you are busy preparing states for the roll out of the first quarter of EtO ambient monitoring data, we're hoping some time in the next couple of weeks might work. Let me know if this time ends up looking bad as we get to this last week of July.

Talk with you soon,

Marion

Draft agenda for our conversation:

- Collection and Analysis Method(s) capable of providing sufficient reliability for a qualitative determination of whether EtO is present in combustion sources
- Timing for testing a range of combustion sources using existing methods
- Communication of source test results
- Timing needs for answering questions regarding background EtO concentrations and sources
- Communicating results from OAR in a coordinated manner

Message

From: Hoyer, Marion [/O=EXCHANGELABS/OU=EXCHANGE ADMINISTRATIVE GROUP (FYDIBOHF23SPDLT)/CN=RECIPIENTS/CN=8DCDB076983049369A80F430A9F1D067-HOYER, MARION]
Sent: 9/26/2019 5:56:50 PM
To: Davidson, Ken [Davidson.Ken@epa.gov]
Subject: EtO background conc
Attachments: EPAs Work to Improve Understanding of Ethylene Oxide.V3.9.6.19_ks.docx

Message

From: Hoyer, Marion [/O=EXCHANGELABS/OU=EXCHANGE ADMINISTRATIVE GROUP (FYDIBOHF23SPDLT)/CN=RECIPIENTS/CN=8DCDB076983049369A80F430A9F1D067-HOYER, MARION]
Sent: 4/24/2019 7:47:11 PM
To: Marion Hoyer (hoyer.marion@epa.gov) [hoyer.marion@epa.gov]
Subject: FW: quick update on EtO testing from LD GDI truck at NRMRL

From: Hoyer, Marion
Sent: Wednesday, April 24, 2019 3:47 PM
To: Sargeant, Kathryn <sargeant.kathryn@epa.gov>; William Charmley (charmley.william@epa.gov) <charmley.william@epa.gov>; Cullen, Angela <cullen.angela@epa.gov>; Michael Olechiw (olechiw.michael@epa.gov) <olechiw.michael@epa.gov>; Nelson, Brian <nelson.brian@epa.gov>; Geidosch, Justine <Geidosch.Justine@epa.gov>; Cook, Rich <Cook.Rich@epa.gov>; McDonald, Joseph <mcdonald.joseph@epa.gov>; Baldauf, Richard <Baldauf.Richard@epa.gov>; Laroo, Chris <laroo.chris@epa.gov>
Subject: quick update on EtO testing from LD GDI truck at NRMRL

I spoke with Tom Long today and he said Enthalpy has all the samples and NRMRL will get the report from them on May 3rd. The report needs to be formally QA'd by NRMRL's internal folks before it can be 'released', but we should know the results on the 3rd or very soon thereafter.

Ingrid George has source samples as well and Justine is in touch with her and can let us know what Ingrid's timing looks like for analyzing the samples --- bear in mind Ingrid is looking for this compound for the first time so we don't want to put lots of pressure on those analyses.

Tom Long has a 8hp Honda lawn mower engine that he can test after the diesel trucks. When Angela, Rich and Mike are in RTP next week I know you'll be checking out the nonroad engine dyno along with everything else and can provide information on capabilities and status after your trip.

Message

From: Hoyer, Marion [/O=EXCHANGELABS/OU=EXCHANGE ADMINISTRATIVE GROUP (FYDIBOHF23SPDLT)/CN=RECIPIENTS/CN=8DCDB076983049369A80F430A9F1D067-HOYER, MARION]
Sent: 5/7/2019 2:02:12 PM
To: Long, Thomas [Long.Thomas@epa.gov]
CC: Cook, Rich [Cook.Rich@epa.gov]; Shores, Richard [Shores.Richard@epa.gov]
Subject: RE: EtO Progress

Thank you so much for the update!

From: Long, Thomas
Sent: Tuesday, May 07, 2019 8:29 AM
To: Hoyer, Marion <hoyer.marion@epa.gov>
Cc: Cook, Rich <Cook.Rich@epa.gov>; Shores, Richard <Shores.Richard@epa.gov>
Subject: EtO Progress

The TO-15s are complete – with a 1 ppb detection limit. However, they're waiting on an instrument repair before calibrating for EtO. The manufacturer rep is coming Wednesday.

_____

Thomas Long, Mechanical Engineer
Mail Drop E343-02
Building D Room 360
109 T. W. Alexander Drive
Research Triangle Park, NC 27711
Phone: 919-541-3944

Message

From: Hoyer, Marion [/O=EXCHANGELABS/OU=EXCHANGE ADMINISTRATIVE GROUP (FYDIBOHF23SPDLT)/CN=RECIPIENTS/CN=8DCDB076983049369A80F430A9F1D067-HOYER, MARION]
Sent: 10/13/2019 8:24:27 PM
To: William Charmley (charmley.william@epa.gov) [charmley.william@epa.gov]
CC: Sargeant, Kathryn [sargeant.kathryn@epa.gov]; Cullen, Angela [cullen.angela@epa.gov]; Nelson, Brian [nelson.brian@epa.gov]; Michael Olechiw (olechiw.michael@epa.gov) [olechiw.michael@epa.gov]; Cook, Rich [Cook.Rich@epa.gov]; Fernandez, Antonio [fernandez.antonio@epa.gov]; Laroo, Chris [laroo.chris@epa.gov]
Subject: EtO - communicating status of mobile evaluation work
Attachments: Ethylene Oxide and Mobile Sources status Oct 2019.docx

Hi Bill,

This note is to provide a quick status update to let you know that OAQPS is planning to post the first-ever set of EtO air monitoring data to the website this coming Friday Oct 18.

As you know, we've worked on an internal QA for this release and OAQPS created a document they will post to the website describing what the Agency is doing to understand potential sources of EtO that might explain some of these lower EtO levels in areas away from known point sources. We have provided input on this document and when OAQPS sends the final version this week, I'll forward it.

In addition, we and OAQPS were thinking that it would be useful for Sarah and Anne to have a short status summary of the work to evaluate combustion sources, the main goal of which is to communicate the message that we do not have definitive data yet, but we are pointing to mid-2020 as the time by which we should be able to speak to the potential role of mobile and other combustion sources. The one-pager attached is intended to provide this short summary and it also functions as a reminder of why this work is important.

Let us know if you have questions or concerns about sharing this one-pager with Sarah and suggesting that she share it with Anne in the context of the monitoring data release this week and as a reminder of OTAQ's role and timeframe for getting data. Matt Brusstar has reviewed it, as well as OAQPS and our ASD team.

Thanks,
Marion

Message

From: Hoyer, Marion [/O=EXCHANGELABS/OU=EXCHANGE ADMINISTRATIVE GROUP (FYDIBOHF23SPDLT)/CN=RECIPIENTS/CN=8DCDB076983049369A80F430A9F1D067-HOYER, MARION]
Sent: 10/13/2019 8:00:21 PM
To: Davis, Alison [Davis.Alison@epa.gov]; Weinstock, Lewis [Weinstock.Lewis@epa.gov]
Subject: EtO one pager for Anne & request for latest document on background EtO that will be posted on web
Attachments: Ethylene Oxide and Mobile Sources status Oct 2019.docx

Hi, we have created this one pager for Sarah and Anne just to update them on the status of evaluation of mobile sources for EtO.

We are going to send it to Sarah this week and suggest that she share it with Anne just to keep Anne aware of where we are on this issue (i.e., we are all working hard to understand where the background is coming from, including a focus on mobile since others have implicated this as a possible source).

Can you send over the latest version of the document that will be posted to the web this Friday that further describes what is being done to evaluate background sources?

Thanks much,
Marion

Internal and Deliberative. Not for Distribution.

Ethylene Oxide (EtO) & Potential Role of Mobile Sources

October 2019

In 2016, ORD finalized an evaluation of the cancer risk from inhalation of ethylene oxide (EtO), concluding:

- EtO is carcinogenic to humans by the inhalation route of exposure
  - Cancers include cancers of the white blood cells (such as non-Hodgkin's lymphoma, myeloma and lymphocytic leukemia) and breast cancer in females.

- The concentration leading to a one hundred-in-a-million cancer risk from inhalation of EtO = 0.02 ug/m3

Air monitoring

- Limited air monitoring data from 18 sites in nine states in areas not clearly linked to an industrial source, average EtO concentrations appear to be in the range of 0.1 to 0.3 ug/m^3
  - These background concentrations are well above the one hundred-in-a-million risk level, the level that EPA generally considers to be the upper limit of acceptable risk

EPA is working to improve the understanding of background sources of EtO

- There are many data gaps in key scientific areas, particularly with regard to identifying the potential for sources other than the known industrial sources of EtO.

- While some preliminary studies from 50 to 60 years ago with now-obsolete engine technology or combustion simulation methods suggested that ethylene oxide may be a by-product of engine combustion, this work used outdated measurement methods with significant uncertainties.

- ORD and OTAQ are working to develop test methods that will allow us to carefully evaluate combustion sources, including mobile sources, to determine the extent to which ethylene oxide may be emitted.
  - Until the methods are established, we will not have reliable data to assess the amount of EtO that may be contributed from mobile sources.

- With ongoing support from ORD, we anticipate a more definitive evaluation of the potential for mobile sources to contribute to ambient levels of EtO by mid-2020.

Message

From: Hoyer, Marion [/O=EXCHANGELABS/OU=EXCHANGE ADMINISTRATIVE GROUP (FYDIBOHF23SPDLT)/CN=RECIPIENTS/CN=8DCDB076983049369A80F430A9F1D067-HOYER, MARION]
Sent: 5/6/2019 4:40:05 PM
To: William Charmley (charmley.william@epa.gov) [charmley.william@epa.gov]; Sargeant, Kathryn [sargeant.kathryn@epa.gov]
CC: Cook, Rich [Cook.Rich@epa.gov]
Subject: update for Chris on EtO
Attachments: EO Sources in Willowbrook.pdf; EPA testing Days with Other activities.pdf

Importance: High

Just want you to know that I will get you a note to send to Chris later this week after the ADD meeting where there is an EtO session which might have information we'll want to tell Chris about.

With regard to an update on the mobile source testing data at ORD – the samples from the LD GDI are at the analysis lab and we are being told that we won't see results for another week or two.

From: Hoyer, Marion
Sent: Monday, May 06, 2019 9:06 AM
To: Sargeant, Kathryn <sargeant.kathryn@epa.gov>; Cullen, Angela <cullen.angela@epa.gov>; Laroo, Chris <laroo.chris@epa.gov>; Cook, Rich <Cook.Rich@epa.gov>; Nelson, Brian <nelson.brian@epa.gov>; Michael Olechiw (olechiw.michael@epa.gov) <olechiw.michael@epa.gov>; Baldauf, Richard <Baldauf.Richard@epa.gov>; McDonald, Joseph <mcdonald.joseph@epa.gov>; Geidosch, Justine <Geidosch.Justine@epa.gov>
Cc: William Charmley (charmley.william@epa.gov) <charmley.william@epa.gov>
Subject: FW: Sterigenics material on EtO sources
Importance: High

Please see the attached material from Sterigenics regarding the source testing, including gasoline and diesel exhaust, that they are reporting on. It does not appear that this information has been released publicly (at least I can't find it on their website), but I've asked OAQPS on the status of that.

The link to the Sterigenics website that they provide in the attached source document has some interesting information.

They provide so little information on the testing that it is hard to interpret their results other than to note that they detected EtO in every source they tested. It appears they tested diesel truck exhaust from an 'inlet prior to cat converter' and in the 'outlet from cat converter' and observed three orders of magnitude lower concentrations post catalyst.

Kathryn and Bill - We will summarize this for a note for Chris, just wanted you to have this first and to get any reactions from anyone who wants to offer perspectives.

Thanks,
Marion

From: Weinstock, Lewis
Sent: Monday, May 06, 2019 8:08 AM
To: Hoyer, Marion <hoyer.marion@epa.gov>; Yelverton, Tiffany <Yelverton.Tiffany@epa.gov>
Cc: Shappley, Ned <Shappley.Ned@epa.gov>; Johnson, Steffan <johnson.steffan@epa.gov>
Subject: Sterigenics material on EtO sources

Hi Marion/Tiffany:

We thought you would be interested in this information from Sterigenics on alleged sources of EtO in the Willowbrook area. Not really asking for a reaction at this point but it's informative to see the array of sources they claim emit EtO. How robust and compound-specific their analytical technique is presumably is another story.

Lewis Weinstock | Office of Air Quality Planning & Standards | U.S. Environmental Protection Agency | Research Triangle Park, NC 27711 | Phone: 919-541-3661|

From: Koerber, Mike
Sent: Friday, May 03, 2019 8:35 PM
To: Weinstock, Lewis <Weinstock.Lewis@epa.gov>; Smith, Darcie <Smith.Darcie@epa.gov>; Davis, Alison <Davis.Alison@epa.gov>; Shappley, Ned <Shappley.Ned@epa.gov>; Bremer, Kristen <Bremer.Kristen@epa.gov>; Rimer, Kelly <Rimer.Kelly@epa.gov>
Subject: Fwd: Sterigenics Risk Assessment

FYI

Sent from my iPhone

Begin forwarded message:

From: "Hoffman, Kathy" <KHoffman@sterigenics.com>
Date: May 3, 2019 at 5:33:11 PM EDT
To: "Mike Koerber (Koerber.mike@Epa.gov)" <Koerber.mike@Epa.gov>
Subject: Sterigenics Risk Assessment

Mike:

Thank you for talking with me earlier this week about the risk assessment underway on the Sterigenics Willowbrook location. As we discussed, we would like to provide some further information on some other EO sources around our Willowbrook facility as well as some construction that has occurred at the Willowbrook Town Hall during your sampling period.

I hope this information helps explain our concerns.

Regards,
Kathy

Kathleen Hoffman
Senior Vice President - Global Environmental, Health & Safety and Technical Services
Sterigenics, A Sotera Health Company
2015 Spring Road, Suite 650
Oak Brook, IL 60523
Office: 630.928.1758
khoffman@sterigenics.com

This e-mail and any files transmitted with it may contain privileged and/or confidential information. If you believe this e-mail or any of its attachments were not intended for you, you must not use, distribute, forward, print or copy this e-mail or any attached files. If you have received this e-mail in error, please notify the sender by reply e-mail and then immediately delete the email and all attachments.

Message

From: Hoyer, Marion [/O=EXCHANGELABS/OU=EXCHANGE ADMINISTRATIVE GROUP (FYDIBOHF23SPDLT)/CN=RECIPIENTS/CN=8DCDB076983049369A80F430A9F1D067-HOYER, MARION]
Sent: 4/3/2019 4:33:37 PM
To: Davidson, Ken [Davidson.Ken@epa.gov]
Subject: FW: Ethylene oxide new info
Attachments: EO+Graph+Fact+Sheet+-+3.27.19.pdf; sterigenicswillowbrookcancer-investigation-final(3).pdf

---

From: Hoyer, Marion
Sent: Tuesday, April 02, 2019 3:26 PM
To: Sargeant, Kathryn <sargeant.kathryn@epa.gov>; Cook, Rich <Cook.Rich@epa.gov>; Cullen, Angela <cullen.angela@epa.gov>; Laroo, Chris <laroo.chris@epa.gov>; Nelson, Brian <nelson.brian@epa.gov>; Michael Olechiw (olechiw.michael@epa.gov) <olechiw.michael@epa.gov>; Geidosch, Justine <Geidosch.Justine@epa.gov>; Baldauf, Richard <Baldauf.Richard@epa.gov>
Subject: Ethylene oxide new info

There is a lot of new information in this email, not all of which everyone needs to know, but in the interest of keeping us all close to the same page.....

First, wrt the docs attached: The 3MB file is a recently released study by the IL Dept of Public Health looking at the cancer incidence in people living near the Sterigenics facility compared with county cancer rates. The report found some statistically significant increased rates of cancer, particularly for women; these are consistent with the known cancer endpoints for this compound. This is a big deal and very worrying. The conclusion to the report is:
"The study's results, when taken as a whole, indicated that some cancers were elevated in populations living near the Sterigenics facility in Willowbrook, Illinois. Many apparent differences and inconsistences, however, existed between genders, across study areas, and among cancer sites. Further studies, preferably with larger populations and multiple facilities, are strongly recommended to confirm this assessment's findings."

Also attached is a one-pager from Sterigenics explaining their evaluation of the monitoring data. We have been told that Sterigenics has conducted source testing, including for mobile sources, but they have no released any data.

Lew Weinstock in OAQPS has been asked to form a 'national EtO communication group' with Alison Davis. They will hold monthly meetings to stay coordinated across offices and EPA Regions on this issue and I've asked to be included. I will also be keeping in touch with Lew (at his request) every two weeks so we can get updates on what is happening, what is being released and any other messages on which we need to be informed.

Some quick updates from my conversation with Lew today:
1 – Concentrations of EtO since closure of the Sterigenics plant have returned to what we now are understanding is potentially our national background: 0.1-0.2 ug/m3
2 – Data from the National Air Toxics Trends sites from the last 6 months indicates that even in very remote areas (e.g., a park in Kentucky with no anthropogenic sources within 100 miles of the monitor) monitors are measuring 0.1-0.2 ug/m3.
3 – OAQPS has a risk assessment underway to estimate the increased cancer risk in the population of Willowbrook from their exposure to EtO; it will be released at the end of May to the Willowbrook community
4 – the RARE grant with Region 5 to develop an on-road monitoring system for EtO is probably months away, but will be used to map out EtO levels near a wide range of potential sources

5 – OAQPS stopped monitoring in Willowbrook and they are now considering monitoring in RTP near a major roadway and in urban and suburban areas. I will keep up on this with Lew and Rich B, you might hear about this too and we'll be interested in any news you get.
6 – There was a public meeting last week on an unrelated issue, but as part of it EPA took comment on the IRIS EtO assessment. Lew said all public comments at the meeting were extremely negative toward EPA for taking comments on a finalized assessment that has gone through rigorous, thorough peer review.

As a reminder on mobile source exhaust testing:
1 – we get the results from NRMRL tomorrow morning on their genset testing
2 – NRMRL is trying to find an analytical lab so they can start the LDGV testing for EtO
3 – NRMRL testing of HD diesel truck is occuring in at least a couple of weeks if not longer

Message

From: Hoyer, Marion [/O=EXCHANGELABS/OU=EXCHANGE ADMINISTRATIVE GROUP (FYDIBOHF23SPDLT)/CN=RECIPIENTS/CN=8DCDB076983049369A80F430A9F1D067-HOYER, MARION]
Sent: 6/10/2019 1:30:31 PM
To: Cook, Rich [Cook.Rich@epa.gov]
Subject: FW: HD gasoline truck testing for EtO

Sorry, I meant to cc you on this. We can discuss.

From: Hoyer, Marion
Sent: Monday, June 10, 2019 9:15 AM
To: Long, Thomas <Long.Thomas@epa.gov>; Shores, Richard <Shores.Richard@epa.gov>
Cc: Nelson, Brian <nelson.brian@epa.gov>; Michael Olechiw (olechiw.michael@epa.gov) <olechiw.michael@epa.gov>; Cullen, Angela <cullen.angela@epa.gov>
Subject: HD gasoline truck testing for EtO

Hi Tom and Richard,

Quick question for you – can you all test a HD gasoline truck on your HD dyno? We are talking about the need to prioritize this testing because if we have EtO in the exhaust from these trucks, we might have opportunities to get reductions more quickly than from LD.

Let us know if this is something you can test and if so, what we can do to help with procurement of a truck you could hopefully test after the Class 8 diesel.

Thanks,
Marion

Message

From: Hoyer, Marion [/O=EXCHANGELABS/OU=EXCHANGE ADMINISTRATIVE GROUP (FYDIBOHF23SPDLT)/CN=RECIPIENTS/CN=8DCDB076983049369A80F430A9F1D067-HOYER, MARION]
Sent: 7/26/2019 1:40:27 PM
To: Shores, Richard [Shores.Richard@epa.gov]
CC: Fernandez, Antonio [fernandez.antonio@epa.gov]; Cullen, Angela [cullen.angela@epa.gov]; Nelson, Brian [nelson.brian@epa.gov]
Subject: HD gas truck for EtO testing

Hi Richard,

Tom mentioned in a voice message that he had lined up a HD gas truck to test. Do you know which truck this is by chance? We can wait until Tom gets back if you don't have the information, but I just thought I'd check.

Thanks,
Marion

Ethylene Oxide (EtO) & Potential Role of Mobile Sources

September 2019

In 2016, ORD finalized an evaluation of the cancer risk from inhalation of ethylene oxide (EtO), concluding:

- EtO is carcinogenic to humans by the inhalation route of exposure
  - Cancers include cancers of the white blood cells (such as non-Hodgkin's lymphoma, myeloma and lymphocytic leukemia) and breast cancer in females.

- The concentration leading to a one hundred-in-a-million cancer risk from inhalation of EtO = 0.02 ug/m3

Air monitoring

- Limited air monitoring data from 18 sites in nine states in areas not clearly linked to an industrial source, average EtO concentrations appear to be in the range of 0.1 to 0.3 ug/m^3
  - These background concentrations are well above the one hundred-in-a-million risk level, the level that EPA generally considers to be the upper limit of acceptable risk

EPA is working to improve our understanding of background sources of EtO

- There are many data gaps in key scientific areas, particularly with regard to identifying the potential for sources other than the known industrial sources of EtO.

- While some preliminary studies from 50 to 60 years ago suggested that ethylene oxide may be formed when fuels are burned in an engine or in other combustion conditions, this work used methods that are outdated, and have significant uncertainties.

- EPA does not have the data necessary to confirm whether EtO is emitted by mobile sources.

- ORD and OTAQ are working to develop methods that will allow us to carefully evaluate combustion sources, including mobile sources, to determine if ethylene oxide is being emitted.

Message

From: Hoyer, Marion [/O=EXCHANGELABS/OU=EXCHANGE ADMINISTRATIVE GROUP (FYDIBOHF23SPDLT)/CN=RECIPIENTS/CN=8DCDB076983049369A80F430A9F1D067-HOYER, MARION]
Sent: 9/25/2019 11:45:56 AM
To: Sargeant, Kathryn [sargeant.kathryn@epa.gov]
Subject: RE: DELIBERATIVE - vm on EtO

We need to adapt it. I'm working on it now and will get OAQPS review along with yours, Angela's and Rich's review before you send it to Sarah – aiming for that today, but I think it if went to Sarah tomorrow that would be ok, do you agree?

From: Sargeant, Kathryn <sargeant.kathryn@epa.gov>
Sent: Tuesday, September 24, 2019 2:24 PM
To: Hoyer, Marion <hoyer.marion@epa.gov>
Subject: RE: DELIBERATIVE - vm on EtO

I think this is a good idea. We could perhaps combine with an email giving a heads-up about the release of the NATTS info. Do we have a one-pager that fits this purpose, or does it need to be further adapted?

From: Hoyer, Marion <hoyer.marion@epa.gov>
Sent: Tuesday, September 24, 2019 1:31 PM
To: Sargeant, Kathryn <sargeant.kathryn@epa.gov>
Subject: FW: DELIBERATIVE - vm on EtO

Hi, with regard to the erroneous conclusion Anne has drawn about mobile sources and EtO, Lew is suggesting below that we consider drafting a one-pager on EtO method development in the context of working to understand if mobile sources emit EtO.

Do you think it makes sense to run this idea by Bill and then Sarah?

From: Weinstock, Lewis <Weinstock.Lewis@epa.gov>
Sent: Tuesday, September 24, 2019 1:25 PM
To: Hoyer, Marion <hoyer.marion@epa.gov>
Subject: DELIBERATIVE - vm on EtO

Thanks – message received. Anne will be here next Thursday (10/3) and I understand that a small amount of time will be devoted to EtO. If the topic of background does come up, perhaps assuming that the NATTS data have gone public, then we might have an opportunity to clarify our position on source testing and potential sources consistent with the background paper that we jointly reviewed. I'll keep you apprised of what happens next week.

An alternative approach might be to have someone from your office provide Anne with a 1-pager on EtO method development for the purposes of a general update, knowing that she is visiting OAQPS on 10/3. In that context, a clarification of the position on mobile sources could be included as a gentle reminder. Not sure your management would sign off on that approach.

Lewis Weinstock | Office of Air Quality Planning & Standards | U.S. Environmental Protection Agency | Research Triangle Park, NC 27711 | Phone: 919-541-3661|

Message

From: Hoyer, Marion [/O=EXCHANGELABS/OU=EXCHANGE ADMINISTRATIVE GROUP (FYDIBOHF23SPDLT)/CN=RECIPIENTS/CN=8DCDB076983049369A80F430A9F1D067-HOYER, MARION]
Sent: 10/21/2019 11:13:47 PM
To: Simon, Karl [Simon.Karl@epa.gov]
CC: William Charmley (charmley.william@epa.gov) [charmley.william@epa.gov]; Sargeant, Kathryn [sargeant.kathryn@epa.gov]; Cullen, Angela [cullen.angela@epa.gov]
Subject: FYI pager on status of mobile source testing for EtO
Attachments: Ethylene Oxide and Mobile Sources status Oct 2019.docx

Hi Karl,

In case it would be helpful to have an update on mobile source EtO testing for the ADD meeting, we've attached a pager that we will be sending up to Sarah and Anne in the coming weeks. Essentially we are noting that methods development is needed to obtain data from mobile sources and other combustion sources and we have testing underway specifically aimed at this methods development work.

OAQPS also has this pager and they will be on point for communicating messages regarding the development of methods and testing for potential sources that might be contributing to background EtO levels.

Let us know if you have questions.

Thanks
Marion

Message

From: Hoyer, Marion [/O=EXCHANGELABS/OU=EXCHANGE ADMINISTRATIVE GROUP (FYDIBOHF23SPDLT)/CN=RECIPIENTS/CN=8DCDB076983049369A80F430A9F1D067-HOYER, MARION]
Sent: 5/1/2019 10:48:10 AM
To: Sargeant, Kathryn [sargeant.kathryn@epa.gov]
Subject: EtO update for Chris
Attachments: Draft Agenda Spring 2019 ADD Mtg 3-21-18.docx; ADD EtO Mobile Source Testing.pptx

This is for Chris, if you think it is helpful or the right info. I didn't get any suggested changes to the slide and I made one small tweak that I don't remember at the moment. Lew has this slide.
The cc's on this email probably just needs to be the managers involved and Rich Cook.

Chris, just two quick updates for you on ethylene oxide:
1) We should be receiving the results from the exhaust testing for EtO from a light-duty gasoline truck either Friday this week or early next week and we'll be in touch with what we learn

2) As you might have seen, the ADD meeting next week includes a session on ethylene oxide Tuesday afternoon and OAQPS asked us to provide a slide on the initial mobile source testing we are conducting with ORD. The slide is attached. OAQPS will present this information for us and Marion has offered to be on the phone to answer questions if needed. The session agenda is below and largely focuses on the ongoing priority discussions regarding stationary source rules, air quality monitoring issues, updates on issues the Regions are facing and plans for the next few months.

Let us know if you have any questions or any comments on the slide.

ADD meeting Tuesday 3:45pm – Ethylene Oxide

- **Goal:** Share information on EtO priority activities and discuss next steps.
- HQ updates on national strategy including rulemaking status/applicability issues, sources not included in NATA, and coordination with other federal agencies.
- Recommendations on handling monitoring requests.
- Brief update on EtO background levels and new monitoring methods research.
  - Planned inclusion of EtO in NATTS network
- Update on regional technical and outreach activities on high priority facilities - focusing on Regions 2 through 8 but including all regions (5 mins per region)
- Group Discussion:
  - What do regions need from HQ

Goals for next 6-12 months

Message

From: Hoyer, Marion [/O=EXCHANGELABS/OU=EXCHANGE ADMINISTRATIVE GROUP (FYDIBOHF23SPDLT)/CN=RECIPIENTS/CN=8DCDB076983049369A80F430A9F1D067-HOYER, MARION]
Sent: 5/20/2019 12:05:29 PM
To: Michael Olechiw (olechiw.michael@epa.gov) [olechiw.michael@epa.gov]
CC: Cullen, Angela [cullen.angela@epa.gov]
Subject: FW: pager for SLT on EtO
Attachments: Ethylene Oxide and Mobile Sources for the SLT May 2019.docx

Mike, per my voice message this morning, here is part of the pager for the SLT this Wed.

From: Hoyer, Marion
Sent: Sunday, May 19, 2019 6:52 PM
To: Cullen, Angela <cullen.angela@epa.gov>
Subject: pager for SLT on EtO

Hi, I have a draft of the upfront part on health and AQ and placeholder for the testing.
I think we should mention that we did find a reference to three papers apparently reporting EtO in combustion emissions. I still need to track two of them down. When we briefed Chris in Feb I had not seen these references or the EPA draft doc that referred to them and we told Chris we could not find any literature at that point on mobile. What do you think about including this?

I am putting together that figure you and I talked about Friday so its not in here and OAQPS is sending me material on Monday from their briefings for Wehrum and if they have a useful graphic I might want to throw something else in for consideration by Bill and Kathryn Monday.

I am teleworking tomorrow until about 1 so I'll be on the phone for the interviews with David et al.

See you after that.
Marion

Message

From: Hoyer, Marion [/O=EXCHANGELABS/OU=EXCHANGE ADMINISTRATIVE GROUP (FYDIBOHF23SPDLT)/CN=RECIPIENTS/CN=8DCDB076983049369A80F430A9F1D067-HOYER, MARION]
Sent: 6/24/2019 1:01:53 PM
To: Cullen, Angela [cullen.angela@epa.gov]
Subject: RE: Draft EtO Briefing

This is a really nice briefing! I will add some information upfront on when and why we started testing mobile (the need to understand potential for additional sources of this compound given the high background levels). I think we'd want to tell Wehrum/remind him of Sterigenics reports on mobile, but we can see if Bill and Kathryn agree (the Sterigenics information will also be another push point for when we need to have public communication on our work so it ties into the end of the briefing).

I'll also add a slide at the end on what we have shared with the Regions so far (at the ADD call) to help people think about timing and content of further informing our internal colleagues.

Thanks so much for pulling this together. Again, I am so grateful we are working on this together!

From: Cullen, Angela
Sent: Friday, June 21, 2019 3:23 PM
To: Hoyer, Marion <hoyer.marion@epa.gov>
Subject: Draft EtO Briefing

Attached is a draft. Comments are welcome. We'll add more to the last slides after our meeting early next week.

Message

From: Hoyer, Marion [/O=EXCHANGELABS/OU=EXCHANGE ADMINISTRATIVE GROUP (FYDIBOHF23SPDLT)/CN=RECIPIENTS/CN=8DCDB076983049369A80F430A9F1D067-HOYER, MARION]
Sent: 8/1/2019 6:49:26 PM
To: William Charmley (charmley.william@epa.gov) [charmley.william@epa.gov]
CC: Cook, Rich [Cook.Rich@epa.gov]; Sargeant, Kathryn [sargeant.kathryn@epa.gov]; Cullen, Angela [cullen.angela@epa.gov]; Olechiw, Michael [olechiw.michael@epa.gov]; Nelson, Brian [nelson.brian@epa.gov]; Fernandez, Antonio [fernandez.antonio@epa.gov]; Laroo, Chris [laroo.chris@epa.gov]; Loftis, Kathy [loftis.kathy@epa.gov]; Kolowich, Bruce [kolowich.bruce@epa.gov]; Walters, Charles [walters.charles@epa.gov]
Subject: EtO background document for Sarah
Attachments: Ethylene Oxide and Mobile Sources backgrounder for Sarah Aug 2019.docx

Bill,

We have an updated background doc for Sarah on EtO attached. This includes a revision to the way we now understand our exploratory mobile source emissions testing.

This is hopefully useful if Sarah needs information before our August 27 briefing. If it is not needed sooner, we could consider sending it to her with the briefing materials.

Let us know if you have questions.

Marion

Update on Ethylene Oxide for Kathryn
March 28, 2019

1) New source testing information from Sterigenics (from Ed March 22)
   - Diesel engine without oxidation catalyst: 200 ug/m3 EtO, none detected after installing an oxidation catalyst
   - Lawn mower exhaust 75 ug/m3 EtO

   We have no information on the testing conditions, engines, etc. We know the lab used for analysis was ALS in California which OAQPS trusts to yield good results.

2) Update on EtO air concentrations in Meadowbrook area
   - OAQPS's continued monitoring and analysis of wind direction clearly indicates the Sterigenics plant is responsible for the high concentrations of EtO. Concentrations have decreased since the plant closed.
   - Evaluation of new data coming in from the National Air Toxics Trends sites and Urban Toxics Monitoring sites has started to suggest an urban background concentration of around 0.3 ug/m3. No one seems to be pointing at the long atmospheric lifetime of this compound as the reason for these background levels and the hunt for additional sources is ongoing, thus the importance of

3) Mobile Source Testing of EtO
   - ORD-NRMRL generator testing, results next Wednesday April 3. Preliminary information indicates they did not find EtO from this genset.

   - ORD-NRMRL
     - To obtain quick, screening-level data for gasoline- and diesel-vehicle exhaust, we opted for research at ORD's National Risk Research Lab where the LD and HD chassis dynos are operated.
     - The results of these initial studies (and data from other sources) will help inform further testing needs and/or specific research questions we might need to pursue (e.g., role of catalysts, role of potential ethylene glycol leak, etc.).
     - NRMRL capabilities and quality assurance (Joe McDonald)
     - ORD is able to perform testing quickly on LDGV and HDDT both on chassis dyno
       - LD GDI truck 2016 Ford F150 (has 5,600 miles)
         - US06 and supplemental FTP using cert fuel, triplicate tests
         - Bag 1 collected into one canister, Bag 2 and 3 combined into a second canister
         - Collecting regulated pollutants

        - Work to secure sample analysis is ongoing (Enthalpy in NC said they won't analyze source samples anymore because they ruin their analytical column. NRMRL is approaching ERG this week)
    - HD diesel sample collection will piggy back on the baseline testing being conducted for the HD NOx team (on a DD8 or Volvo initially)

- NVFEL potential development work (Justine can update us)
- SwRI remains an option for the future

4) Coordination and communication: OAQPS, Region 5, OTAQ and ORD. Need to circle back with Bill on this.

Message

From: Hoyer, Marion [/O=EXCHANGELABS/OU=EXCHANGE ADMINISTRATIVE GROUP (FYDIBOHF23SPDLT)/CN=RECIPIENTS/CN=8DCDB076983049369A80F430A9F1D067-HOYER, MARION]
Sent: 7/5/2019 5:23:44 PM
To: Loftis, Kathy [loftis.kathy@epa.gov]
Subject: RE: EtO Meeting

Hi Kat,

Thank you so much for your reply and your amazing ability to dive deep into this so fast. It sounds like there is a tremendous amount of methodological work ahead of us, so I'm doubly grateful for whatever you learn about yours and others personal safety needs as well as for the inventory assessment that you are willing to perform. It seems our ORD colleagues are also working under standard procedures and not finding the need to implement anything different, new or special for handling EtO.

Thanks for making time for the meetings on this.

I hope you had a good, long weekend and were able to catch your breath from the move you mentioned below.

Marion

From: Loftis, Kathy
Sent: Tuesday, July 02, 2019 10:36 AM
To: Hoyer, Marion <hoyer.marion@epa.gov>
Subject: RE: EtO Meeting

Marion,

My apologies for not responding sooner, particularly to your sincere email. I have barely had a moment to sit and write these past two weeks. I intended to take a few moments on the weekend, but my family is preparing to move again (on short notice), and it's just been a whirlwind.

I appreciate your concern with our use of EtO and our role as a potential point source. Particularly, as you said, given that UM is possibly a source emitter. I will calculate the maximum amount of ethylene oxide we would possibly use over the course of this study and get back to you. My primary goal is to limit the use of ethylene oxide while still maintaining the integrity of the program. Initially, I anticipated only having to use ethylene oxide in a very limited capacity to test the recovery in the test cells. The idea being that the system would be tested once, by spiking the tunnel with a known quantity of ethylene oxide, and we would then know the expected recovery yield for the given cell. Because the test conditions would not change, and because the cells are regularly tested for leaks—meaning we would not need to reassess recovery due to a leaky system because testing would only be conducted in a leak-tight system—once the recovery efficiency is established, the conditions and definitions would hold for the longevity of the program. For example, if we find that we have 98% recovery in the cold test cell when there are no leaks present, so long as there is not a leak, we can expect 98% recovery for all future tests provided temperature and humidity are controlled; if there is a leak, the test is not conducted until the leak is repaired (this is assessed by propane injections). As such, I would recommend that the recovery spikes not be conducted at regular intervals, but only when test conditions change significantly in a manner that would foreseeably affect ethylene oxide reactivity in the tunnel. Additionally, I would recommend that we match expected vehicle/engine ethylene oxide emissions when spiking. This would give us a more realistic and applicable understanding of the system while minimizing the amount of ethylene oxide used. For example, based on preliminary data, we are estimating roughly 8 ppb EtO in vehicle emissions, so we should aim to spike roughly the same order of magnitude when testing recovery (e.g. 10 ppb). Comparing this to something like a sterilization

facility, we're using concentrations that are 7 orders of magnitude less—and likely smaller volumes as well, though I have yet to find exactly what volumes are used per sterilization cycle, so I am not confident with this detail.

There have been some concerns about the stability of ethylene oxide in varying sampling conditions: bags vs cannisters. So I believe we will have to add some more testing, but I anticipate that we will be working with relatively small volumes (tedlar bags and SUMMA cannisters) and the low concentrations (here, I believe we need to assess stability of EtO in ppt-ppb range given that this represents the range expected upon collection).

Again, I'll come up with a rough sampling/test outline and estimate ethylene oxide usage. I am finding that I need to reevaluate the intuition I had built as research faculty in academia, where I tended to focus my research efforts (so as to stretch funding), whereas the EPA (understandably) has a broader scope. Therefore, I'll run these estimates by Bruce, given he has good foresight, and will get back to you with these estimates. I have yet to discuss the concept of developing an EtO usage inventory with Bruce and hope for an opportunity to do so, lest he get the impression he has been sidelined.

As far as controlling emissions during spikes, it would be fruitful to get a better idea of the specifics of the scrubbers. The hydrolysis of ethylene oxide is driven primarily by the ratio of water to ethylene oxide and is expedited by 3<pH>12 and increasing temperatures. My understanding is that aqueous scrubbers are efficient at trapping EtO, though I believe these also contain packing material (charcoal?).

Finally, I want to sincerely thank you for making introductions with Ned, Tiffany, and Ingrid. I am always grateful to meet colleagues and establish working relationships. I am appreciative that you assisted in expanding my network and would never see that action as overstepping or in a negative light. Please feel free to offer advice, recommendations, insight, and connections as you see fit.

Sincerely,
Kat

From: Hoyer, Marion
Sent: Wednesday, June 19, 2019 6:24 PM
To: Loftis, Kathy <loftis.kathy@epa.gov>
Subject: RE: EtO Meeting

Kat, you are so wonderful. Thank you for this very thoughtful note.

I was worried that you thought I had directed my stern comment at you, but it was not intended that way. I am absolutely dismissive of OSHA and NIOSH exposure values; they are not sufficient for you to be protected. This issue of mobile source EtO is going to be with us for years and we absolutely cannot have you or others in the lab incurring exposures that are above ambient, outdoor levels.

I absolutely trust your judgement on measures you and Bruce have at hand to make sure you are protected from spikes in concentration due to gross leaks. And, we collectively need to think farther than that, and you cannot be alone in thinking this through. I am not an occupational exposure expert, but I do want to see your operation with one of my public health experts (Chad Bailey) so that we can also be thinking about this with you. I don't intend this to be intrusive or at all a trust issue, I just need to be able to sleep at night. This EtO issue is new enough to us all that I think we collectively need to be hyper diligent and not trust typical safety protocols without a considered and re-visited look at when/if/how you could be exposed while you are doing this really important work.

Beyond that, I might need your help estimate the possible upper-bound emissions that our lab might emit to the air from our work. This compound is so highly carcinogenic and along with other nearby sources (e.g., potentially the UM hospital complex), we need to make sure we are super accountable to the general public who live and breath near our facility.

I am so grateful you are here at EPA. What a perfect convergence of your expertise and an emerging issue that can benefit so tremendously from your insight and tremendous analytical chemistry skills (Chris speaks glowing of you ☺). I am always here if you want to touch base on any aspect of this issue. Thank you for making that trip to RTP to see the NRMRL facility and to meet Ingrid.

I look forward to working with you on this challenging issue.
Marion

From: Loftis, Kathy
Sent: Wednesday, June 19, 2019 5:58 PM
To: Hoyer, Marion <hoyer.marion@epa.gov>
Subject: EtO Meeting

Marion,

I wanted to touch base with you after today's meeting. I'm worried that in trying to communicate the measures I have taken to minimize the possibility of exposure, I may have given you the impression that I was dismissive of your concerns with the safety of all parties involved. I want to assure you that I heard and value what you were saying today, and I wholeheartedly agree. I, too, have serious concerns about the use of ethylene oxide and am striving to make the entire process as safe as possible.

I also want to thank you for advocating and voicing the need for increased safety and safe-handling protocols. The level of concern and attention to human health—including our own employees—is one of the driving factors that brought me to the EPA from academia. I feel better knowing that I and our colleagues have support, particularly when working with something as dangerous and toxic as ethylene oxide.

Sincerely,
Kat

Kathy M. Loftis, PhD
Chemist, Fuels Chemistry Center
Testing and Advanced Technology Division
National Vehicle and Fuel Emissions Laboratory
US Environmental Protection Agency
Ph:734-214-4624
Fax: 734-214-4440
loftis.kathy@epa.gov

Message

From: Hoyer, Marion [/O=EXCHANGELABS/OU=EXCHANGE ADMINISTRATIVE GROUP (FYDIBOHF23SPDLT)/CN=RECIPIENTS/CN=8DCDB076983049369A80F430A9F1D067-HOYER, MARION]
Sent: 4/17/2019 1:29:37 AM
To: William Charmley (charmley.william@epa.gov) [charmley.william@epa.gov]
CC: Sargeant, Kathryn [sargeant.kathryn@epa.gov]
Subject: Ethylene Oxide (202-991-0477; code 8908907# leader pin 84661)

Hi Bill,

I don't know if you still want to have the meeting tomorrow on EtO. There isn't much new to report since the email update from April 7 (I inserted it below).

The one new piece of information is that testing for EtO in NRMRL on the LD GDI truck started yesterday, so hopefully we'll have some results in a week or so.

Let me know if you want to keep this meeting below.

Thanks,
Marion

Update from April 7:
New health and monitoring information:
The Illinois Department of Public Health (IL DPH) recently released a study reporting on elevated cancers in the Willowbrook area where the Sterigenics facility was causing very elevated concentrations of ethylene oxide. Some of the increased cancer types (e.g., breast cancer) are expected based on studies in occupationally exposed workers. The highest cancer increase, a 90% increase in Hodgkin's lymphoma in women living near the facility, is an endpoint that has not been observed in occupational studies, however non-Hodgkin's lymphoma is caused by ethylene oxide. There are some inconsistencies in the IL DPH study and the authors are quick to point out that "no single study is likely to prove that a particular exposure definitively causes a particular disease. Cancer studies are inherently complex and in almost all cases the cause of a person's, or group of people's, cancers is difficult to determine." Further study is warranted and OAQPS is conducting a risk assessment for the Willowbrook area which is supposed to be completed by the end of May. Here is the link to the public IL DPH study:
http://www.dph.illinois.gov/news/idph-releases-cancer-assessment-area-surrounding-sterigenics-facility-0

It is useful to know that this IL DPH study was recommended by a 2018 study by the Agency for Toxics Substances and Disease Registry (ATSDR) Study requested by Ed Nam. ATSDR noted that based on measured and modeled concentrations of ethylene oxide in the Meadowbrook area, the emissions from the Sterigenics plant pose a public health hazard. Here is the link to this ATSDR report:
https://www.atsdr.cdc.gov/HAC/pha/sterigenic/Sterigenics_International_Inc-508.pdf

With closure of the Sterigenics plant in Willowbrook (mid-Feb), concentrations of ethylene oxide decreased significantly to a level that is now looking like it is potentially the national background level. OAQPS is monitoring concentrations of ~0.1-0.2 ug/m3 of this compound in even areas remote from the urban environment. Thus, the diligent search for other sources continues.

Mobile source testing:
ORD's samples from the diesel generator found NO ethylene oxide in the exhaust. Our folks (Chris Laroo, Justine Geidosch and others) trust the methods used and the results. However, this was a very preliminary test on one engine

that was designed to look at potential loss of ethylene oxide in a source sample. The results cannot be released publicly because the sampling was conducted without a QAPP. ORD only communicated the results to OAR verbally.

We are working with the NRMRL dyno staff to collect samples from a light duty GDI soon and then to leverage some previously planned testing on a HD diesel truck. EtO is difficult to analyze in exhaust samples, and we are experiencing some challenges lining up a chemistry lab to analyze samples with a short turnaround. However, if everything proceeds smoothly, we hope to have very preliminary data within a month or so.

Communication:
OAQPS has pulled their monitoring center director, Lew Weinstock, into the OAQPS front office to lead the coordination and communication on ethylene oxide issues across EPA along with Alison Davis whom you probably know from the OAQPS communication staff. They have organized a meeting every two weeks so that we are staying well-coordinated in EPA; we are folded into those conversations as are all the Regions with point sources of EtO.

Subject: Ethylene Oxide (202-991-0477; code 8908907# leader pin 84661)
Location: AA-Room-Office-N66-ConfRoom/AA-OTAQ-OFFICE

Start: Wed 4/17/2019 3:05 PM
End: Wed 4/17/2019 3:55 PM

Recurrence: (none)

Meeting Status: Accepted

Organizer: Charmley, William
Required Attendees: Hoyer, Marion; Cook, Rich; Laroo, Chris; Geidosch, Justine; Joe McDonald (mcdonald.joseph@epa.gov); Michael Olechiw (olechiw.michael@epa.gov); Nelson, Brian; Cullen, Angela; Kathryn Sargeant (sargeant.kathryn@epa.gov)

03.28.19 -- Bill asked to have this moved

Message

From: Hoyer, Marion [/O=EXCHANGELABS/OU=EXCHANGE ADMINISTRATIVE GROUP (FYDIBOHF23SPDLT)/CN=RECIPIENTS/CN=8DCDB076983049369A80F430A9F1D067-HOYER, MARION]
Sent: 11/13/2019 5:58:16 PM
To: William Charmley (charmley.william@epa.gov) [charmley.william@epa.gov]; Kathryn Sargeant (sargeant.kathryn@epa.gov) [sargeant.kathryn@epa.gov]; Cullen, Angela [cullen.angela@epa.gov]; Cook, Rich [Cook.Rich@epa.gov]
Subject: AA Idsal visiting ORD on EtO testing tomorrow Nov 14

Rebecca Dodder (NRMRL lab) just called to let us know that OAQPS has organized a visit for AA Idsal tomorrow to the testing facilities in ORD where EtO research is being conducted. There is 5 min on Anne's agenda for a quick walk by the dyno facility. Rebecca called to ask what we suggest she say to Anne about the mobile EtO testing and I sent her the section below from our SLT pager and also the QA on mobile that we drafted for the release of the air monitoring data.

Rebecca said she would let us know if anything of note comes up on the tour related to mobile sources and EtO.

Mobile Source Evaluations

- In 2019, we conducted testing on two gasoline light-duty vehicles, one gasoline heavy-duty vehicle, and one diesel heavy-duty vehicle at ORD using EPA Method TO-15 (summa canisters). Many lessons have been learned, which are being used to improve the sampling and analysis methods throughout the testing.

Message

From: Hoyer, Marion [/O=EXCHANGELABS/OU=EXCHANGE ADMINISTRATIVE GROUP (FYDIBOHF23SPDLT)/CN=RECIPIENTS/CN=8DCDB076983049369A80F430A9F1D067-HOYER, MARION]
Sent: 11/13/2019 5:45:42 PM
To: Dodder, Rebecca [Dodder.Rebecca@epa.gov]
Subject: mobile EtO
Attachments: Ethylene Oxide and Mobile Sources status for SLT Nov 2019 AC MH.docx

Mobile Source Evaluations

- In 2019, we conducted testing on two gasoline light-duty vehicles, one gasoline heavy-duty vehicle, and one diesel heavy-duty vehicle at ORD using EPA Method TO-15 (summa canisters). Many lessons have been learned, which are being used to improve the sampling and analysis methods throughout the testing.

I've heard that mobile sources have been identified as a source of ethylene oxide. Is that true? What is EPA doing about this?

While some preliminary studies from 50 to 60 years ago suggested that ethylene oxide may be formed when fuels are burned in an engine or in other combustion conditions, this work used methods that are outdated, and have significant uncertainties. Because of the lack of robust data and research into the potential for formation of ethylene oxide in combustion, EPA is working to develop methods that will allow us to carefully evaluate combustion sources, including mobile sources to determine the extent to which ethylene oxide may be emitted.

Message

From: Cullen, Angela [cullen.angela@epa.gov]
Sent: 11/6/2019 8:55:42 PM
To: Hoyer, Marion [hoyer.marion@epa.gov]
Subject: FW: ACTION by 11/12: SLT Backgrounder on EtO
Attachments: Ethylene Oxide and Mobile Sources status Nov 2019 AC.docx

Flag: Follow up

Marion,

I do think we should add some information because the testing here will have cross-divisional impacts. TATD will need to spend some money and FTE for the NIOSH method, TATD will have to conduct testing which may impact CD's testing in the cells, and we need to spend ASD money. I added a "Mobile Source Evaluation" section to the bottom of the document that Kathryn sent out initially. It's rough, but I wanted to get your thoughts before I spent too much time with it.

Thanks,
Angela

From: Sargeant, Kathryn <sargeant.kathryn@epa.gov>
Sent: Wednesday, November 06, 2019 3:26 PM
To: Hoyer, Marion <hoyer.marion@epa.gov>; Cullen, Angela <cullen.angela@epa.gov>
Subject: ACTION by 11/12: SLT Backgrounder on EtO

The SLT is having a retreat Nov. 20-21 and has requested 1-2 page background read-ahead materials on several topics. The purpose is to provide basic information sharing about what the work is and any schedules that apply for the attendees of the retreat, for situational awareness.

One of the topics they've requested is ethylene oxide.

The one-pager you developed for Sarah (attached) is obviously great for this purpose, but I don't know if there's anything more you'd want to add specifically related to work OTAQ will be doing in the next year or its timing? If you want to add something, do you think we should coordinate it with Brusstar? (He was copied on the overall request so he'd have the context.)

This due to Lee on 11/14. If we add stuff, we might need to run it by Bill (and Brusstar?) first—I'm willing to do this, if you think it needs his review.
If you give it to me by COB 11/12, I can take care of that.
If you think it's good as is, just let me know, and I'll take care of it from here.

Thanks! Let me know if you have any questions.

Message

From: Long, Thomas [Long.Thomas@epa.gov]
Sent: 4/8/2019 12:56:18 PM
To: Hoyer, Marion [hoyer.marion@epa.gov]
CC: Cook, Rich [Cook.Rich@epa.gov]; Geidosch, Justine [Geidosch.Justine@epa.gov]; Yelverton, Tiffany [Yelverton.Tiffany@epa.gov]
Subject: RE: EtO Analysis

As I understand it from Tiffany, it is Enthalpy's process for determining the detection limit for the sample in each can.

_____
Thomas Long, Mechanical Engineer
Mail Drop E343-02
Building D Room 360
109 T. W. Alexander Drive
Research Triangle Park, NC 27711
Phone: 919-541-3944

From: Hoyer, Marion
Sent: Monday, April 08, 2019 8:52 AM
To: Long, Thomas <Long.Thomas@epa.gov>
Cc: Cook, Rich <Cook.Rich@epa.gov>; Geidosch, Justine <Geidosch.Justine@epa.gov>
Subject: RE: EtO Analysis

Hi Tom, Is the sensitivity analysis the spiked recovery from one of the cold starts?

From: Long, Thomas
Sent: Monday, April 08, 2019 8:44 AM
To: Hoyer, Marion <hoyer.marion@epa.gov>
Cc: Cook, Rich <Cook.Rich@epa.gov>; Geidosch, Justine <Geidosch.Justine@epa.gov>
Subject: RE: EtO Analysis

We'll have them quote with EtO, M3C, TO-15, and sensitivity analysis.

_____
Thomas Long, Mechanical Engineer
Mail Drop E343-02
Building D Room 360
109 T. W. Alexander Drive
Research Triangle Park, NC 27711
Phone: 919-541-3944

From: Hoyer, Marion
Sent: Monday, April 08, 2019 7:19 AM
To: Long, Thomas <Long.Thomas@epa.gov>
Cc: Cook, Rich <Cook.Rich@epa.gov>; Geidosch, Justine <Geidosch.Justine@epa.gov>
Subject: RE: EtO Analysis

We'll go with whatever you recommend. I agree it would be really helpful to get more than jus EtO and we can pay for a full TO-15 and inert gases.

Thanks Tom

From: Long, Thomas
Sent: Monday, April 08, 2019 6:56 AM
To: Hoyer, Marion <hoyer.marion@epa.gov>
Subject: EtO Analysis

Marion,

Did you need other compounds analyzed or only Ethylene oxide? Perhaps M3C inert gases and TO-15? They need to know in order to complete their quote. Thanks.

_____
Thomas Long, Mechanical Engineer
Mail Drop E343-02
Building D Room 360
109 T. W. Alexander Drive
Research Triangle Park, NC 27711
Phone: 919-541-3944

Message

From: Brusstar, Matt [brusstar.matt@epa.gov]
Sent: 9/27/2019 2:40:30 PM
To: Hoyer, Marion [hoyer.marion@epa.gov]
CC: Cullen, Angela [cullen.angela@epa.gov]
Subject: RE: for your ok or edit
Attachments: Ethylene Oxide and Mobile Sources v1-mb.docx

Flag: Follow up

Comments/edits attached. Thanks for the opportunity to review!

From: Hoyer, Marion <hoyer.marion@epa.gov>
Sent: Thursday, September 26, 2019 3:13 PM
To: Brusstar, Matt <brusstar.matt@epa.gov>
Cc: Cullen, Angela <cullen.angela@epa.gov>
Subject: for your ok or edit

Message

From: Long, Thomas [Long.Thomas@epa.gov]
Sent: 6/17/2019 5:59:16 PM
To: Cullen, Angela [cullen.angela@epa.gov]; Laroo, Chris [laroo.chris@epa.gov]
CC: Hoyer, Marion [hoyer.marion@epa.gov]; McDonald, Joseph [McDonald.Joseph@epa.gov]
Subject: EtO Reg Results

We hope to have the regulated emissions organized enough to share by COB tomorrow. Chris, I will include sample forms as well.

I can confirm that regulated emissions testing was performed under a Category C QAPP and EtO sampling analysis was completed under a Category A QAPP.

_____

Thomas Long, Mechanical Engineer
Mail Drop E343-02
Building D Room 360
109 T. W. Alexander Drive
Research Triangle Park, NC 27711
Phone: 919-541-3944

Message

From: Shappley, Ned [Shappley.Ned@epa.gov]
Sent: 6/21/2019 7:13:11 PM
To: Hoyer, Marion [hoyer.marion@epa.gov]; Loftis, Kathy [loftis.kathy@epa.gov]
CC: Yelverton, Tiffany [Yelverton.Tiffany@epa.gov]; George, Ingrid [George.Ingrid@epa.gov]; Weinstock, Lewis [Weinstock.Lewis@epa.gov]; Ryan, Jeff [Ryan.Jeff@epa.gov]; Kariher, Peter [Kariher.Peter@epa.gov]
Subject: RE: method development for EtO

Thanks Marion,

I have been out of the office the last three weeks on travel (EtO related work) so we missed the connection but it is my understanding Kat connected with Tiffany and Peter Kariher regarding a similar impinger based methodology that we are both pursuing.

I am not aware of any combustion measurements for EtO being taken at this time although my ORD partners may be more informed than me. Most of our focus to this point has been on identifying techniques and acquiring the proper tools to make this measurement. Our next steps will be evaluating these measurments on a bench scale before moving to a synthetic or combustion stream.

As for safety, I don't' believe we haven't developed a formal EtO specific safety strategy outside standard practices, but we have ordered personnel monitors with sensors specific to EtO to have when we are actively using this compound. We have order the
The ToxiRae with an EtO ECD sensor (see below) which was suggested to us by Region 4 and I saw in use at a chemical facility for the last couple of weeks. This sensor they are using is cross sensitive to CO, but this cross sensitivity is linear (10:1) and allows the instrument to be calibrated with CO.

https://www.raesystems.com/sites/default/files/content/resources/Manual_ToxiRAE-Pro_G02-4009-000_RevC.pdf

I am not aware of anyone being tasked with creating an inventory but we intend to scrub any streams (when possible) containing EtO prior to release to atmosphere.

Hoppe this is helpful,
Ned

From: Hoyer, Marion
Sent: Friday, 21 June, 2019 14:39
To: Loftis, Kathy <loftis.kathy@epa.gov>; Shappley, Ned <Shappley.Ned@epa.gov>
Cc: Yelverton, Tiffany <Yelverton.Tiffany@epa.gov>; George, Ingrid <George.Ingrid@epa.gov>; Weinstock, Lewis <Weinstock.Lewis@epa.gov>
Subject: method development for EtO

Hi Ned,

I'm getting in touch to introduce you to Kat Loftis in our office. She is an analytical chemist who is developing an EtO collection method for use in our lab with mobile source measurements. Kat was in RTP a few weeks ago and was able to meet Tiffany and Ingrid. I just wanted to make sure she is connected with you too so that we can all be building from each other's experiences on this.

I am also wondering if you know when additional combustion source measurements might be underway?

Lastly, I am curious about two lab-related health issues –

- Are you all taking any particular or special measures to make sure EPA analysts who are working with EtO are protected from exposure?
- Is anyone tasked with creating an emissions inventory for the EtO that might be vented from the RTP facilities?

Thanks much,
Marion

Message

From: Sargeant, Kathryn [sargeant.kathryn@epa.gov]
Sent: 4/8/2019 11:57:10 AM
To: Grundler, Christopher [grundler.christopher@epa.gov]; Hengst, Benjamin [Hengst.Benjamin@epa.gov]; Cook, Leila [cook.leila@epa.gov]; Birgfeld, Erin [Birgfeld.Erin@epa.gov]
CC: Hoyer, Marion [hoyer.marion@epa.gov]; Charmley, William [charmley.william@epa.gov]; Cullen, Angela [cullen.angela@epa.gov]; Nelson, Brian [nelson.brian@epa.gov]; Olechiw, Michael [olechiw.michael@epa.gov]
Subject: Ethylene oxide - new information and update on testing mobile sources

Chris, please see Marion's update below.
Erin, there's info on communication at the bottom, FYI.

From: Hoyer, Marion
Sent: Sunday, April 07, 2019 9:47 PM
To: Sargeant, Kathryn <sargeant.kathryn@epa.gov>; Charmley, William <charmley.william@epa.gov>
Cc: Cook, Rich <Cook.Rich@epa.gov>; Geidosch, Justine <Geidosch.Justine@epa.gov>; Laroo, Chris <laroo.chris@epa.gov>; Cullen, Angela <cullen.angela@epa.gov>; Nelson, Brian <nelson.brian@epa.gov>; Olechiw, Michael <olechiw.michael@epa.gov>; Baldauf, Richard <Baldauf.Richard@epa.gov>
Subject: Ethylene oxide - new information and update on testing mobile sources

Kathryn and Bill,

The ethylene oxide issues are evolving pretty rapidly and we are providing below some relevant updates on recent events. We can get on Chris' calendar as soon as we have some information from the ORD dyno testing, or sooner, if you'd like.

New health and monitoring information:
The Illinois Department of Public Health (IL DPH) recently released a study reporting on elevated cancers in the Willowbrook area where the Sterigenics facility was causing very elevated concentrations of ethylene oxide. Some of the increased cancer types (e.g., breast cancer) are expected based on studies in occupationally exposed workers. The highest cancer increase, a 90% increase in Hodgkin's lymphoma in women living near the facility, is an endpoint that has not been observed in occupational studies, however non-Hodgkin's lymphoma is caused by ethylene oxide. There are some inconsistencies in the IL DPH study and the authors are quick to point out that "no single study is likely to prove that a particular exposure definitively causes a particular disease. Cancer studies are inherently complex and in almost all cases the cause of a person's, or group of people's, cancers is difficult to determine." Further study is warranted and OAQPS is conducting a risk assessment for the Willowbrook area which is supposed to be completed by the end of May. Here is the link to the public IL DPH study: http://www.dph.illinois.gov/news/idph-releases-cancer-assessment-area-surrounding-sterigenics-facility-0

It is useful to know that this IL DPH study was recommended by a 2018 study by the Agency for Toxics Substances and Disease Registry (ATSDR) Study requested by Ed Nam. ATSDR noted that based on measured and modeled concentrations of ethylene oxide in the Meadowbrook area, the emissions from the Sterigenics plant pose a public health hazard. Here is the link to this ATSDR report:
https://www.atsdr.cdc.gov/HAC/pha/sterigenic/Sterigenics_International_Inc-508.pdf

With closure of the Sterigenics plant in Willowbrook (mid-Feb), concentrations of ethylene oxide decreased significantly to a level that is now looking like it is potentially the national background level. OAQPS is monitoring concentrations of ~0.1-0.2 ug/m3 of this compound in even areas remote from the urban environment. Thus, the diligent search for other sources continues.

Mobile source testing:

ORD's samples from the diesel generator found NO ethylene oxide in the exhaust. Our folks (Chris Laroo, Justine Geidosch and others) trust the methods used and the results. However, this was a very preliminary test on one engine that was designed to look at potential loss of ethylene oxide in a source sample. The results cannot be released publicly because the sampling was conducted without a QAPP. ORD only communicated the results to OAR verbally.

We are working with the NRMRL dyno staff to collect samples from a light duty GDI soon and then to leverage some previously planned testing on a HD diesel truck. EtO is difficult to analyze in exhaust samples, and we are experiencing some challenges lining up a chemistry lab to analyze samples with a short turnaround. However, if everything proceeds smoothly, we hope to have very preliminary data within a month or so.

Communication:
OAQPS has pulled their monitoring center director, Lew Weinstock, into the OAQPS front office to lead the coordination and communication on ethylene oxide issues across EPA along with Alison Davis whom you probably know from the OAQPS communication staff. They have organized a meeting every two weeks so that we are staying well-coordinated in EPA; we are folded into those conversations as are all the Regions with point sources of EtO.

Message

From: Yelverton, Tiffany [Yelverton.Tiffany@epa.gov]
Sent: 5/16/2019 4:24:27 PM
To: Weinstock, Lewis [Weinstock.Lewis@epa.gov]; Whitaker, Donald [Whitaker.Donald@epa.gov]; Oliver, Karen [Oliver.Karen@epa.gov]; George, Ingrid [George.Ingrid@epa.gov]; Hoyer, Marion [hoyer.marion@epa.gov]; Long, Thomas [Long.Thomas@epa.gov]; Thoma, Eben [Thoma.Eben@epa.gov]; Ryan, Jeff [Ryan.Jeff@epa.gov]; Kariher, Peter [Kariher.Peter@epa.gov]; Sieffert, Margaret [Sieffert.Margaret@epa.gov]; Shappley, Ned [Shappley.Ned@epa.gov]; Nash, Dave [Nash.Dave@epa.gov]; Dewees, Jason [Dewees.Jason@epa.gov]; Chen, Xi [Chen.Xi@epa.gov]; Trapp, Kristin [Trapp.Kristin@epa.gov]; Witt, Jon [Witt.Jon@epa.gov]; Baldauf, Richard [Baldauf.Richard@epa.gov]; Cook, Rich [Cook.Rich@epa.gov]; Hagler, Gayle [Hagler.Gayle@epa.gov]
Subject: Yelverton, Tiffany shared the folder "A-E RA4 EtO Output" with you.

Please try this link and make sure you have access to the folder for edits and comment as well as the draft Output and Product Description document. If you have any issues with access or have questions in general, please don't hesitate to contact me.

Thank you again for your help!
Tiffany

This link only works for the direct recipients of this message.

A-E RA4 EtO Output

Open

Microsoft OneDrive

Microsoft respects your privacy. To learn more, please read our Privacy Statement.
Microsoft Corporation, One Microsoft Way, Redmond, WA 98052

Message

From: Yelverton, Tiffany [Yelverton.Tiffany@epa.gov]
Sent: 5/16/2019 4:23:35 PM
To: Weinstock, Lewis [Weinstock.Lewis@epa.gov]; Whitaker, Donald [Whitaker.Donald@epa.gov]; Oliver, Karen [Oliver.Karen@epa.gov]; George, Ingrid [George.Ingrid@epa.gov]; Hoyer, Marion [hoyer.marion@epa.gov]; Long, Thomas [Long.Thomas@epa.gov]; Thoma, Eben [Thoma.Eben@epa.gov]; Ryan, Jeff [Ryan.Jeff@epa.gov]; Kariher, Peter [Kariher.Peter@epa.gov]; Sieffert, Margaret [Sieffert.Margaret@epa.gov]; Shappley, Ned [Shappley.Ned@epa.gov]; Nash, Dave [Nash.Dave@epa.gov]; Dewees, Jason [Dewees.Jason@epa.gov]; Chen, Xi [Chen.Xi@epa.gov]; Trapp, Kristin [Trapp.Kristin@epa.gov]; Witt, Jon [Witt.Jon@epa.gov]; Baldauf, Richard [Baldauf.Richard@epa.gov]; Cook, Rich [Cook.Rich@epa.gov]
CC: Hagler, Gayle [Hagler.Gayle@epa.gov]
Subject: A-E RA-4 EtO Output and Product Description Draft Document

Hello All,

As we discussed in our call earlier today, I have put the Word document onto OneDrive and will be sharing that link for editing with you all momentarily. Please make sure to have all of your comments, edits, and additions tracked so that others can see clearly who has made changes and suggestions. I have also provided a folder for anyone that would like to download the document, make their own changes in Word (with track changes) and then upload the document to a folder for inclusion (just put your initials at the end of the Word document title to denote your changes). I know everyone works best in different ways and I want everyone to have the opportunity to have their voices heard through this process with as little headache for everyone as possible.

Please let me know if you have questions, concerns, or issues with access and editing to the OneDrive files I share. Thank you again for your help and I look forward to us working together to make our Output (and more importantly our contributing Products) fit the needs of the Agency.

Best,
Tiffany

Tiffany L. B. Yelverton, Ph.D.
Mechanical Engineer
Stationary Source Branch
Office of Research & Development
U. S. Environmental Protection Agency
109 T. W. Alexander Drive (E305-01)
Research Triangle Park, NC 27711

919.541.9456 (office)
919.541.0554 (fax)

Message

From: Cook, Rich [Cook.Rich@epa.gov]
Sent: 5/31/2019 2:17:07 PM
To: Mazza, Carl [Mazza.Carl@epa.gov]
CC: Sargeant, Kathryn [sargeant.kathryn@epa.gov]; Hoyer, Marion [hoyer.marion@epa.gov]; Moltzen, Michael [Moltzen.Michael@epa.gov]
Subject: ORD Mobile Source EtO Work

Hi Carl –

Just wanted to let you know that you will be seeing a product under RA-4 for mobile source EtO characterization. This product reflects on ongoing test program in ORD's dyno facility. ORD is testing several gasoline and diesel vehicles for this compound. We are funding the work. ORD has experience with the methods needed to collect samples for measurement, and already has a contract in place for analysis (they are very few labs in the country that can do the measurement). We are sending staff to RTP to learn their methods for collection. They have been incredibly responsive on this need from our office. We are also providing funding for their chem lab to upgrade an analyzer so they can develop methods to do EtO measurement in house.

Give me a buzz if you have any questions.

Rich Cook
Health Effects, Benefits, and Air Toxics Center
Assessment and Standards Division
Office of Transportation and Air Quality
U. S. Environmental Protection Agency
(734)214-4827

Message

From: Cook, Rich [Cook.Rich@epa.gov]
Sent: 4/4/2019 12:42:54 PM
To: Yelverton, Tiffany [Yelverton.Tiffany@epa.gov]
CC: Hoyer, Marion [hoyer.marion@epa.gov]; Laroo, Chris [laroo.chris@epa.gov]; Geidosch, Justine [Geidosch.Justine@epa.gov]
Subject: RE: Check In -- EtO Testing

I was talking to Richard Shores yesterday and he said Tom Long has been having extensive conversations with Enthalpy, and they will bring us up to date.

Tom has pointed out to Enthalpy that the controlled engines we will be testing emit fat less NO than the genset so plugging up the column will be less of an issue.

We also have some money to help cover down time if that is an issue.

In addition, there are other options and I think it will be good to discuss those.

So I do think a discussion will be useful.

Rich Cook
Health Effects, Benefits, and Air Toxics Center
Assessment and Standards Division
Office of Transportation and Air Quality
U. S. Environmental Protection Agency
(734)214-4827

From: Yelverton, Tiffany
Sent: Thursday, April 04, 2019 8:39 AM
To: Cook, Rich <Cook.Rich@epa.gov>
Subject: RE: Check In -- EtO Testing

Hey Rich,

Is this call necessary given our discussion yesterday? Or is this a discussion to go in a different direction?

Best,
Tiffany

-----Original Appointment-----
From: Cook, Rich
Sent: Wednesday, March 20, 2019 1:28 PM
To: Cook, Rich; Long, Thomas; Hays, Michael; George, Ingrid; Hoyer, Marion; Geidosch, Justine; Laroo, Chris; Cullen, Angela; Nelson, Brian; Shores, Richard; Yelverton, Tiffany; Olechiw, Michael
Cc: Weinstock, Lewis
Subject: Check In -- EtO Testing
When: Thursday, April 04, 2019 12:30 PM-1:00 PM (UTC-05:00) Eastern Time (US & Canada).
Where: AA-Room-Office-C34-ConfRoom/AA-OTAQ-OFFICE

OK trying this again!

Sorry I could not find a time that works for everyone.

Call in:

202991-0477
4177161#

Message

From: Loftis, Kathy [loftis.kathy@epa.gov]
Sent: 7/26/2019 3:38:41 PM
To: Hoyer, Marion [hoyer.marion@epa.gov]
Subject: RE: thank you!!

I'm so glad you're on! I wasn't sure if you were and my jaw dropped. I was hesitant to ask, since we wanted to talk to Ingrid and Tiffany first, but I'm glad I did now. I was really surprised.

From: Hoyer, Marion
Sent: Friday, July 26, 2019 11:37 AM
To: Loftis, Kathy <loftis.kathy@epa.gov>
Cc: Kolowich, Bruce <kolowich.bruce@epa.gov>
Subject: thank you!!

Thanks so much for calling in to this discussion with Enthalpy and for posing all your questions!!

I'm so sorry there was absolutely NO heads up. I was 10 min late because I had no idea Tom was scheduling this (he told me he was on vacation today!).

I am really surprised they could not answer your question about why the ion abundance pattern doesn't fit with EtO..... Yikes.

Message

From: Cullen, Angela [cullen.angela@epa.gov]
Sent: 5/30/2019 2:35:21 PM
To: Hoyer, Marion [hoyer.marion@epa.gov]; Sargeant, Kathryn [sargeant.kathryn@epa.gov]
CC: Cook, Rich [Cook.Rich@epa.gov]; Baldauf, Richard [Baldauf.Richard@epa.gov]
Subject: RE: EtO outputs and

It's fine in there. My guess is that he put PEMS in there because we do not know how we'll test nonroad yet.

From: Hoyer, Marion
Sent: Thursday, May 30, 2019 10:27 AM
To: Sargeant, Kathryn <sargeant.kathryn@epa.gov>; Cullen, Angela <cullen.angela@epa.gov>
Cc: Cook, Rich <Cook.Rich@epa.gov>; Baldauf, Richard <Baldauf.Richard@epa.gov>
Subject: EtO outputs and

Thanks Rich!

Kathryn, FYI that ORD NRMRL has submitted this draft product for mobile source eval of EtO. I think this aligns with what we expect and want it to say.

Angela, this is the product for mobile source EtO evaluation that ORD is proposing as part of the research planning process underway; their work for us needs to be articulated in this process and Tom Long wanted to keep it general which seems fine. Are you ok with the mention of PEMS here (there is no obligation around it), or is that such a stretch that we don't even want them including it in this draft product?

From: Cook, Rich
Sent: Thursday, May 30, 2019 9:04 AM
To: Hoyer, Marion <hoyer.marion@epa.gov>
Subject: RE: outputs for EtO

So far one project mobile source related:

Product X: ***Assessing EtO Emissions from Motor Vehicles***
Brief Description and Research Use:
The research would focus on conducting motor vehicle emissions measurements of EtO for on-road and non-road engines. Emissions characterization will be conducted using dynamometer and PEMS techniques, if appropriate, to understand the extent of emissions under varying technology, fuel and operating conditions.
Product Form: Data and/or Report detailing emission rates of EtO for varying engine types, fuels and operations
Key Words: Mobile sources, Dynamometer, PEMS, emission factors
Interdependencies (as appropriate): Development of appropriate measurement techniques for dynamometer and/or PEMS sampling, ability to develop a priority list of fleet types and fuels for sampling
Product Lead: TBD
Partners (as appropriate): OAQPS, OTAQ
Start Date: 09/2019 Delivery Date: 09/2021

Rest of products focused on fugitive emission measurements, instrument technologies, etc.

Rich Cook
Health Effects, Benefits, and Air Toxics Center
Assessment and Standards Division

Office of Transportation and Air Quality
U. S. Environmental Protection Agency
(734)214-4827

Message

From: Cook, Rich [Cook.Rich@epa.gov]
Sent: 5/30/2019 1:03:41 PM
To: Hoyer, Marion [hoyer.marion@epa.gov]
Subject: RE: outputs for EtO

Oh, OK. Lets of stuff flying around. So far one project mobile source related:

Product X: ***Assessing EtO Emissions from Motor Vehicles***
Brief Description and Research Use:
The research would focus on conducting motor vehicle emissions measurements of EtO for on-road and non-road engines. Emissions characterization will be conducted using dynamometer and PEMS techniques, if appropriate, to understand the extent of emissions under varying technology, fuel and operating conditions.
Product Form: Data and/or Report detailing emission rates of EtO for varying engine types, fuels and operations
Key Words: Mobile sources, Dynamometer, PEMS, emission factors
Interdependencies (as appropriate): Development of appropriate measurement techniques for dynamometer and/or PEMS sampling, ability to develop a priority list of fleet types and fuels for sampling
Product Lead: TBD
Partners (as appropriate): OAQPS, OTAQ
Start Date: 09/2019 Delivery Date: 09/2021

Rest of products focused on fugitive emission measurements, instrument technologies, etc.

Rich Cook
Health Effects, Benefits, and Air Toxics Center
Assessment and Standards Division
Office of Transportation and Air Quality
U. S. Environmental Protection Agency
(734)214-4827

From: Hoyer, Marion
Sent: Thursday, May 30, 2019 8:58 AM
To: Cook, Rich <Cook.Rich@epa.gov>
Subject: RE: outputs for EtO

Sorry, I wasn't clear – I was asking you if you have gone onto the Sharepoint site Tiffany sent to see what is new

---

From: Cook, Rich
Sent: Thursday, May 30, 2019 8:44 AM
To: Hoyer, Marion <hoyer.marion@epa.gov>
Subject: RE: outputs for EtO

You sent a drafty description of the output on Saturday, but I have not seen any drafts of products yet. I can follow up with Tiffany and Tom and ask if there is anything yet.

Rich Cook
Health Effects, Benefits, and Air Toxics Center
Assessment and Standards Division
Office of Transportation and Air Quality
U. S. Environmental Protection Agency

(734)214-4827

From: Hoyer, Marion
Sent: Thursday, May 30, 2019 7:15 AM
To: Cook, Rich <Cook.Rich@epa.gov>
Subject: outputs for EtO

Have you had a chance recently to look at the projects that are being/were generated for Tiffany's EtO output? I think Tom Long was going to submit one and I asked that we partner with him, but I have not heard whether they actually drafted something. There may be other new projects in there that we'd want to know about too.
Thanks,
Marion

Message

From: Weinstock, Lewis [Weinstock.Lewis@epa.gov]
Sent: 4/30/2019 12:55:32 PM
To: Hoyer, Marion [hoyer.marion@epa.gov]
Subject: RE: EtO update for ADD meeting
Attachments: Draft Agenda Spring 2019 ADD Mtg 3-21-18.docx

Flag: Follow up

Hi Marion:

This is great – thanks. I'm replying with a copy of the ADD agenda so you can see the session description for May 7.

I certainly don't expect to be mentioning any results to the ADD's next week. If something positive comes up, when can collectively figure out how to message.

Lewis Weinstock | Office of Air Quality Planning & Standards | U.S. Environmental Protection Agency | Research Triangle Park, NC 27711 | Phone: 919-541-3661|

From: Hoyer, Marion
Sent: Monday, April 29, 2019 7:31 PM
To: Weinstock, Lewis <Weinstock.Lewis@epa.gov>
Subject: RE: EtO update for ADD meeting

Hi Lew,

I've attached a slide on the mobile source testing that has division director approval on our end. I'll let our office director know it will be presented in an EtO session at the ADD meeting next week. Do you have an agenda for the EtO session just so I can let our OD know where this fits in the context of the other info being presented?

I didn't include lots of detail since that didn't seem necessary just yet. I can be on the phone for this session to answer questions if they come up – let me know if that is helpful.
It is probably important that people understand we are taking this very seriously and we want to first methodically step through different engines and then, depending on results, pursue the most pressing questions (i.e., if the results are negative, we likely need to test when lower detection limit methods are available), if the results are positive then we put all resources into that that would be needed to understand emission rates from different engine families and technologies and determine how to prevent formation.

ORD has finished the light duty gasoline vehicle testing and they are expecting results from Enthalpy this Friday. Apparently the report goes right to a QA officer first, but if I hear anything, especially if it is positive, I will let you know asap. Otherwise, I'll set up a meeting for next week so we can discuss the findings and next steps. I don't think this is going to be ready for delivery to the ADDs but we can promise to update them through the biweekly calls or whatever method you choose.

Let me know if you need anything changed on the slide.

Thanks,
Marion

From: Weinstock, Lewis
Sent: Wednesday, April 24, 2019 1:18 PM

To: Hoyer, Marion <hoyer.marion@epa.gov>
Subject: EtO update for ADD meeting

Hi Marion:

We spoke briefly about an EtO session at the upcoming ADD meeting (May 7). Alison and I are co-leading the session with Mark Smith, the Reg 7 ADD. Would you be able to provide a summary slide (or two) on the work being coordinated with ORD? There will surely be interest in this information as we tee up issues related to background and source investigations.

I'm including a template slide if that would be helpful. If not, I'll take the information in any form and handle the formatting. Thanks in advance for your help!

Lewis Weinstock | Office of Air Quality Planning & Standards | U.S. Environmental Protection Agency | Research Triangle Park, NC 27711 | Phone: 919-541-3661|

Message

From: Geidosch, Justine [Geidosch.Justine@epa.gov]
Sent: 5/29/2019 5:48:37 PM
To: Hoyer, Marion [hoyer.marion@epa.gov]
CC: Cook, Rich [Cook.Rich@epa.gov]; Laroo, Chris [laroo.chris@epa.gov]; Fernandez, Antonio [fernandez.antonio@epa.gov]; Cullen, Angela [cullen.angela@epa.gov]; Olechiw, Michael [olechiw.michael@epa.gov]
Subject: RE: Ethylene Oxide in Mobile Source Exhaust
Attachments: Barnard et al (1972) Combustion of n-pentane in a Shock Tube.pdf

The shock tube study does report ethylene oxide formation in a couple of the experiments, but only at the highest pressures and temperatures they observed (greater than 65 psi and 800 C). There wasn't a whole lot of discussion on ethylene oxide formation specifically, but I think nothing conclusive can be drawn from this study beyond that it is possible to form EtO from pentane and oxygen at very controlled and specific conditions. Chris, I'd be interested to hear your opinion as well.

I sent along the reference to the 1959 Hughes conference proceeding to the library as well, and will report if they are able to get it. Both of the authors on the 1960 paper are on this study as well and it was the year before the article we do have. I imagine it will be mostly the same information as the journal article, but will keep digging.

Thanks,
Justine

From: Hoyer, Marion
Sent: Tuesday, May 28, 2019 7:49 AM
To: Geidosch, Justine <Geidosch.Justine@epa.gov>
Cc: Cook, Rich <Cook.Rich@epa.gov>; Laroo, Chris <laroo.chris@epa.gov>; Fernandez, Antonio <fernandez.antonio@epa.gov>; Cullen, Angela <cullen.angela@epa.gov>; Olechiw, Michael <olechiw.michael@epa.gov>
Subject: RE: Ethylene Oxide in Mobile Source Exhaust

This is super helpful, thank you Justine!

Darcie Smith (OAQPS) sent the attached 1985 EtO Health Assessment Document (HAD) that references these three papers, with the Hughes 1959 ref:

Hughes, K.J., R.W. Hurn and F.G. Edwards. 1959. Separation and identification of oxygenated hydrocarbons in combustion products from automotive engines. In: Proc. 2nd Int. Symp. on Gas Chromatography,· East. Lansing, Michigan, p.-171-182.

Justine, can you see if the librarian can get their hands on this document? If they can't, let's find out if it is available at UM.

Here is the document blurb on this reference: Hughes et al. (1959) used gas-liquid partition chromatography to separate and identify oxygenated derivatives of hydrocarbons that were found in the combust ion products of hydrocarbon fuels. Among the oxygenated combustion products identified were ethylene oxide and propylene oxide.

From: Geidosch, Justine
Sent: Friday, May 24, 2019 11:14 AM

To: Hoyer, Marion <hoyer.marion@epa.gov>
Subject: RE: Ethylene Oxide in Mobile Source Exhaust

Hi Marion,

Here's what I was able to find –

Barnard and Lee (1972) is a shock tube study, meaning the conditions probably won't be similar or applicable to our work, but I haven't been able to read the full study and it may give us some insight into potential formation mechanisms. We don't have access, but I'm sending an email to the library to look into if we can get it.

J. A. BARNARD & K.-Y. LEE (1972) The Combustion of *n*-pentane in a Shock Tube, Combustion Science and Technology, 6:3, 143-150

As far as the reference for Hughes, 1959, I'm not 100% sure. There is a 1959 patent by an EM Hughes titled Production of Unsaturated Hydrocarbons which I think may be what they're talking about, however the patent only mentions the formation of ethylene, not ethylene oxide. It does fit the description in the blurb in that they were combusting hydrocarbon fuels, but they only look at the hydrocarbon products.

https://patentimages.storage.googleapis.com/5d/a3/c0/5f1200b6cd1719/US2870231.pdf

However, there is a 1960 article by a KJ Hughes, titled "A preliminary survey of Hydrocarbon-derived oxygenated material in automobile exhaust gases," that I think might actually be what the blurb is referencing and they have the year wrong. The was a GC separations study looking at exhaust from an automotive V8 engine running on isooctane and hexane. The sampling is a bit unrefined (raw exhaust was collected into a glass flask and then measured by GC). The authors did look for EtO, and report it, but also were unable to separate EtO from acetaldehyde and report at the sum of acetaldehyde + ethylene oxide. So while they say they were able to successfully detect and report EtO quantitatively , they really weren't and never confidently measured EtO.

K. J. Hughes & R. W. Hurn (1960) A Preliminary Survey of Hydrocarbon-Derived Oxygenated Material in Automobile Exhaust Gases, Journal of the Air Pollution Control Association, 10:5, 367-373

https://www.tandfonline.com/doi/pdf/10.1080/00022470.1960.10467944

I'll let you know when I hear from the library on the other article.

Thanks,

Justine

Justine Geidosch
Physical Scientist, Assessment and Standards Division
Office of Transportation and Air Quality
US Environmental Protection Agency

Ph: (734) 214-4923
geidosch.justine@epa.gov

From: Hoyer, Marion
Sent: Wednesday, May 22, 2019 7:41 AM
To: Geidosch, Justine <Geidosch.Justine@epa.gov>
Subject: FW: Ethylene Oxide in Mobile Source Exhaust

Were you able to track down the other two papers that were mentioned in this blurb that Darcie sent us in Feb? Can you remind me what the status is on this?

From: Hoyer, Marion
Sent: Monday, February 25, 2019 6:41 PM
To: Laroo, Chris <laroo.chris@epa.gov>; Cullen, Angela <cullen.angela@epa.gov>
Cc: Geidosch, Justine <Geidosch.Justine@epa.gov>; Cook, Rich <Cook.Rich@epa.gov>
Subject: FW: Ethylene Oxide in Mobile Source Exhaust

I somehow did not see this email from early Feb. The article reports EtO in motor vehicle exhaust when simple HCs are combusted (e.g., isooctane).

They used a chromosorb bed to separate the water from the HCs in exhaust. While this is older analytical chem, it is certainly worth looking closer at their method as we develop our own.

From: Smith, Darcie
Sent: Monday, February 04, 2019 2:54 PM
To: Hoyer, Marion <hoyer.marion@epa.gov>
Cc: Geidosch, Justine <Geidosch.Justine@epa.gov>; Cook, Rich <Cook.Rich@epa.gov>
Subject: RE: Ethylene Oxide in Mobile Source Exhaust

Hi Marion –

I wanted to pass along some references I found, just in case you don't already have them. (I was actually searching for uses of EtO and they popped up.) They are fairly old so there is likely newer research available.

There is a 1984 External Review Draft of a Health Assessment Document for Ethylene Oxide and in it, there is the statement that "among the oxygenated combustion products identified were ethylene oxide and propylene oxide... Seizinger and Dimitriades (1972) identified ethylene oxide as a component of automobile exhaust". The image of this paragraph is below. The document is in NSCEP so I couldn't figure out how to get the pdf to share with you. However, I was able to find the 1972 Seizinger reference - Oxygenates in Exhaust from Simple Hydrocarbon Fuels - and it is attached. Hopefully you'll be able to determine if it is useful or not. Sorry to bother you if it isn't useful!

Seizinger, D.E. and B. Dimitriades. 1972. Oxygenates in exhaust from simple hydrocarbon fuels. Jour. Air Pollut. Contr. Assoc. 22(1): 47-51.

5.3.3. Potential Environmental Formation. The major source of potential inadvertent production in the environment of ethylene oxide is probably the combustion of hydrocarbon fuels. Hughes et al. (1959) utilized gas-liquid partition chromatography to separate and identify oxygenated derivatives of hydrocarbons that were found in the combustion products of hydrocarbon fuels.

5-23

Among the oxygenated combustion products identified were ethylene oxide and propylene oxide. Barnard and Lee (1972) identified these compounds in the oxygenated combustion products from n-pentane combustion. Seizinger and Dimitriades (1972) identified ethylene oxide as a component of automobile exhaust. The fuels used were simple hydrocarbons, not gasoline, but all were components of gasoline; no lead was present. Stationary sources of hydrocarbon combustion may also emit large quantities of these compounds into the environment.

Darcie Smith
U.S. EPA/OAQPS/ATAG
919.541.2076
smith.darcie@epa.gov

From: Hoyer, Marion
Sent: Tuesday, December 18, 2018 4:16 PM
To: Koerber, Mike <Koerber.Mike@epa.gov>; Smith, Darcie <Smith.Darcie@epa.gov>
Cc: Chen, Xi <Chen.Xi@epa.gov>; Sargeant, Kathryn <sargeant.kathryn@epa.gov>; Geidosch, Justine <Geidosch.Justine@epa.gov>; Cook, Rich <Cook.Rich@epa.gov>
Subject: RE: Ethylene Oxide in Mobile Source Exhaust

Hi Mike,

We would like to learn more about what you are hearing on this. I have talked with Ed Nam, Region 5's AD who used to be a center director in our division, but knowing more broadly what you are learning from monitoring data would be good. I will look for time on calendars.

Thanks,
Marion

From: Koerber, Mike
Sent: Tuesday, December 18, 2018 3:34 PM
To: Smith, Darcie <Smith.Darcie@epa.gov>
Cc: Chen, Xi <Chen.Xi@epa.gov>; Hoyer, Marion <hoyer.marion@epa.gov>
Subject: Re: Ethylene Oxide in Mobile Source Exhaust

Thanks!

Marion - Let me know if you'd like to learn what we are hearing about this.

Sent from my iPhone

On Dec 18, 2018, at 3:27 PM, Smith, Darcie <Smith.Darcie@epa.gov> wrote:

Hi Mike –

Here's the email chain from OTAQ about exhaust. To summarize, in the 1908s, someone put a statement in that EtO could be in exhaust. Since then, every fact sheet and health assessment has built a chain of references back to that original speculation. OTAQ tracked all this down and discovered what was going on.

Marion – do I understand correctly that you will be testing for it now? (Also, for some context, this question has come up a lot lately with respect to EtO monitoring data and potential sources of emissions other than sterilization facilities.)

Thanks,
Darcie

Darcie Smith
U.S. EPA/OAQPS/ATAG
<image005.png> 919.541.2076
<image006.png>smith.darcie@epa.gov

From: Hoyer, Marion
Sent: Monday, October 29, 2018 3:24 PM
To: Geidosch, Justine <Geidosch.Justine@epa.gov>
Cc: Smith, Darcie <Smith.Darcie@epa.gov>; Cook, Rich <Cook.Rich@epa.gov>
Subject: RE: Ethylene Oxide in Mobile Source Exhaust

Justine,

Excellent sleuthing! It is very helpful to know (albeit disconcerting) that someone in EPA assumed, and put in the federal register, that because there are octanes in fuel, significant amount of ethylene oxide are probably being released by mobile sources.

I think we need to answer questions about this with a clear point that prior statements (which have been repeated by other Federal Agencies) were speculation and to our knowledge, no one has measured ethylene oxide in mobile source exhaust.

We've done what we can on this for now. Thank you!

Marion

From: Geidosch, Justine
Sent: Monday, October 29, 2018 2:54 PM
To: Hoyer, Marion <hoyer.marion@epa.gov>
Subject: Ethylene Oxide in Mobile Source Exhaust

Hi Marion,

I chased down the reference I mentioned regarding ethylene oxide in exhaust. The EPA's fact sheet on ethylene oxide (https://www.epa.gov/sites/production/files/2016-09/documents/ethylene-oxide.pdf), updated January 2018, mentions automobile exhaust as source of EtO. The reference cited here is the 1990 Toxicological Profile for Ethylene Oxide (https://www.atsdr.cdc.gov/toxprofiles/tp137.pdf) from the US Public Health Service. The profile references a 1980 EPA statement in the Federal Register that concludes that "because pentanes are found in gasoline, significant amounts of ethylene oxide are probably released annually to the atmosphere from automobile exhaust." I searched for the notice, but wasn't able to find it online (45:33084-33133).

The NIH's website also lists vehicle exhaust as a source of ethylene oxide (https://toxtown.nlm.nih.gov/chemicals-and-contaminants/ethylene-oxide). They reference the first document I have linked above.

Let me know if you want me to do more searching. I did do a Science Direct search for actual measurements of ethylene oxide from exhaust, but didn't come up with anything.

Thanks,
Justine

MICHIGAN STATE
UNIVERSITY

The Michigan State University Libraries are pleased to supply this material to you from our collection. The MSU library does not hold copyright of this material and cannot authorize any further reproduction.

Interlibrary Services

MSU LIBRARIES

The copyright law of the United States (Title 17, United States Code) governs the making of photocopies or other reproductions of copyrighted materials. Under certain conditions specified in the law, libraries and archives are authorized to furnish a photocopy or other reproduction. One of these specified conditions is that the photocopy or reproduction is not to be "used for any purpose other than private study, scholarship, or research". If a user makes a request for, or later uses, a photocopy or reproduction for purposes in excess of "fair use", that user may be liable for copyright infringement.

If you have questions,
please contact your library.

MSU is an affirmative-action, equal-opportunity employer.

D 15-3-5-3

ILL Number:

LWeb

Borrower: 3USE

Rec Date: 5/28/2019 9:33:56 AM

Lending String:

Patron:

Call #: QD516 .C616 v.5-6 1972/1973
Location: MSU REMOTE STORAGE D
AVAILABLE
ISSN: 0010-2202 0588-5698

Journal Title: Combustion science and technology.

Volume: 6 **Issue:** 3
Month/Year: 1972
Pages: 143-150

Charge
Maxcost:

Article Author:

Article Title: TheCombustion of n-pentane in a Shock Tube

Shipping Address:
US EPA
NVFEL LIBRARY
2000 TRAVERWOOD DR.
ANN ARBOR, MI 48105

Imprint:

Fax: 734-214-4525
Ariel: SCAN&POST
Odyssey:

Notes:
http://catalog.lib.msu.edu/record=b2211269~S39a

Scan in ILLiad

Michigan State University ILL (EEM)

ILLiad TN: 1175710

EPA-2021-004229

Combustion Science and Technology, 1972, Vol. 6, pp. 143–150

© Gordon and Breach, Science Publishers Ltd.
Printed in The United Kingdom

The Combustion of *n*-pentane in a Shock Tube

J. A. BARNARD AND R. K.-Y. LEE

Department of Chemical Engineering, University College, London

Abstract—The slow combustion of *n*-pentane has been studied in a single pulse chemical shock tube. The yields of oxygenated products are similar in many respects to those found in static systems, and as the reactions in a shock tube are entirely homogeneous, these products, including ketones, are formed in the gas phase and not by reactions at the wall.

INTRODUCTION

One of the principal uncertainties in hydrocarbon oxidation is our knowledge of the role of the surface. On the one hand, the products obtained from the slow oxidation of 2-methylpentane in a static system are virtually identical to those obtained when the combustion takes place in an adiabatic compression machine or in a motored internal combustion engine (Affleck and Fish, 1967; Fish *et al.*, 1969). From this, they argue that the principal chain-propagating steps, in which the products are largely formed, must be homogeneous.

On the other hand, Kinnear and Knox (1971) draw attention to the fact that in the oxidation of the lower alkanes at about 300 °C, the products comprise mainly the olefine with the original carbon skeleton and a complex mixture of minor products, the composition of which is very sensitive to the state of the walls of the reaction vessel.

An additional complication in studying combustion reactions is the fact that many of the primary products are capable of further oxidation and to obtain meaningful information about the mechanism of hydrocarbon oxidation it is necessary to pay particular attention to the early stages of the reaction where secondary oxidation is relatively unimportant.

Kinnear and Knox (1971) have made such a study of the early stages of the oxidation of *n*-penatane at 250 and 290 °C. The major products found were pentene-2, acetone, methyl ethyl ketone, acetaldehyde and 2-methyltetrahydrofuran in good agreement with the results of Hughes and Simmons (1969) at 270 °C.

While it is possible to write plausible schemes of homogeneous reactions for the formation of most of these products, the route by which acetone and methyl ethyl ketone are produced is exceedingly difficult to visualise, although Hughes and Simmons (1969) have made some interesting suggestions.

Because of the extreme sensitivity of the product yields to the nature of the surface in their experiments, and because of the way the yields of ketones change with pressure, Kinnear and Knox (1971) suggested that the formation of these products must be heterogeneous. They suggest that the oxidation of *n*-pentane, and probably of the higher alkanes also, proceeds by a very complex process which involves a primary homogeneous free-radical chain reaction. This chain produces one or more unstable products which are not usually detected. These products, probably hydroperoxides, then diffuse to the walls where they decompose to a complex mixture of products, the composition of this mixture depending on the vessel surface.

It is obviously necessary to test this attractive hypothesis and, if possible, resolve the contradictory evidence concerning the role of the surface in combustion reactions. We have therefore studied the oxidation of *n*-pentane in a single-pulse chemical shock tube. In such an apparatus, the reaction times are around 1 millisec, while the time for diffusion to the wall is of the order 10 sec; consequently wall reactions must be negligible (Kervorkian *et al.*, 1960).

Although there are a number of uncertainties in the single-pulse shock tube technique, recent work (e.g. Wing Tsang, 1963; Bradley and Frend, 1971; Barnard and Seebohm, 1969) has shown that it is possible to obtain kinetic data which is in very satisfactory agreement with that obtained by more conventional static and flow techniques.

The principal errors inherent in the single-pulse shock tube technique are discussed in more detail elsewhere (Belford and Strehlow, 1969; Barnard, Lee, and Yates, 1972); however, in the present work most of these are less unimportant than is the

ED_005799A_00001883-00003

EPA-2021-004229

case in measurements of absolute rate constants and Arrhenius parameters, since attention is directed mainly at the relative yields of various products under given reaction conditions. Furthermore, the sampling procedure was designed to determine only stable products, and the difficulties associated with sampling through fine orifices into, e.g., a time-of-flight mass spectrometer, do not occur.

There has been one previous study of the oxidation of *n*-pentane in a shock tube (Dahm and Verhoek, 1968). This work concentrated on the yield of peroxides, which were fairly high between 298 and 435 °C. The only other products detected were acetaldehyde and crotonaldehyde. Pentanes were definitely absent, as were a number of other products found by other workers. The importance of hydroperoxide formation was also emphasized by Lucquin (1958) working between 250 and 450 °C.

The oxidation of *n*-pentane has also been studied by Chung and Sandler (1968, 1969) in both static and flow systems. A region of negative temperature coefficient of the rate existed between about 400 and 550 °C, and a reaction scheme involving the RO_2 radical was proposed. The analyses reported do, however, refer to relatively high conversions.

In restricted regions of temperature and pressure, *n*-pentane/oxygen mixtures give cool-flames. The magnitudes of the temperature and pressure pulses in these cool-flames have been studied by Hughes and Simmons (1970), while the products of the cool-flame reaction have been very carefully examined by Cullis *et al.* (1967).

EXPERIMENTAL

The single-pulse shock tube was based on that described by Lifshitz, Bauer, and Resler (1963). The temperature of the reactants is raised by the incident shock, which is reflected at the end wall. The reflected shock brings about further heating, roughly doubling the reactants' temperature. The gas remains hot until the arrival of the expansion fan which follows the incident shock down the tube. The tube was 37 mm i.d., the driver being brass and the working section stainless steel. The length of the driver could be varied from 0.3 to 2 metres by means of a movable piston. The working section was 3.6 metres long and a specially designed and constructed vane valve (Seebohm, 1968) could be used to isolate the gas in the end section; this end section was 63.5 mm long. A 28 litre dump tank was placed just downstream of the diaphragm position.

The diaphragms were of thin Melinex (kindly donated by ICI Ltd.) and were punctured by a fine needle.

Helium was used as the driver gas, and helium/argon mixtures containing small amounts of pentane and oxygen were used as the working gas. The He:Ar ratio was adjusted to give tailored (or slightly over-tailored) conditions (Seebohm, 1968; Wittliff *et al.*, 1959).

The shock speed was measured by timing the passage of the shock past two strain gauges (GEC type SP1101), mounted flush with the side wall of the shock tube. The temperatures were calculated from the incident shock velocities. The reaction time was measured by a quartz piezo-electric pressure transducer (SLM type PZ6M) mounted in the end wall. Because the heating time varied along the tube, this mounting position means that the reaction times were slightly over-estimated, but this is unimportant in the present work where interest is concentrated on product yields.

The signal from the transducer was fed to one beam of a double beam oscilloscope (Tektronix Model 565) and the signals from the strain gauges to the other which was run to give a raster display. Signals from a time-mark generator (Tektronix type RM 181) were superimposed on both traces allowing accurate estimation of the time intervals.

After the mixture had been shock heated, the vane valve was closed and the contents of the end section removed through a stainless steel Hone valve for analysis by gas chromatography using a flame ionisation detector. The oxygenated products were analyzed on a column packed with $\beta\beta'$-oxydipropionitrile on chromosorb W, while the hydrocarbons were separated on a column packed with diethyl sebacate and bismethoxyethyl sebacate on chromosorb P.

Since the vane valve was closed within 5 sec of firing the shock, the amount of longitudinal mixing must have been negligible. Separate experiments showed that the amount of driver in the sample was too small to be measured ($<0.1\%$).

RESULTS

The first experiments, in which the temperatures in the reflected shock were about 400 °C, showed that the extent of reaction under the prevailing conditions (reaction time 2 millisec, pressure between 1–4 atm) was very small. The shock strengths were therefore increased to give higher temperatures and significant amounts of oxygenated products

ED_005799A_00001883-00004

EPA-2021-004229

TABLE I

Reaction Conditions
P_5 and T_5 are respectively the pressure and the temperature in the reflected shock.

Run No.	Molar ratio O_2:fuel	% reactants in working gas	P_5 (torr)	T_5 (°C)	t millisec
337	1:1	1.0	3170	608	2.25
335	1:1	1.0	2660	632	2.25
336	1:1	0.92	2700	694	2.25
330	8:1	1.03	3450	671	2.25
329	8:1	1.03	3520	818	2.25
333	8:1	0.96	3640	842	2.25

were detected from 600 °C upwards. The conditions in some typical runs are given in Table 1.

The product analyses from the runs listed in Table 1 are shown in Table 2. It is immediately obvious that acetone and methyl ethyl ketone are major products, and that the range of products is very similar to that observed in static systems some 400° lower (Knox and Kinnear, 1971; Hughes and Simmons, 1969).

DISCUSSION

The first point of some interest is the high temperature necessary to achieve even small extents of reaction. At 700 °C, the conversion (based on observed products) in a time of 2.25 millisec was around 0.2% for an equimolar pentane-oxygen mixture diluted in inert gas. This is somewhat surprising in view of earlier work (Dahm and Verhoek 1968) in which up to 1% of the pentane initially present was converted to hydroperoxide at temperatures between 298 and 435 °C. The pressures in their work were however, much higher; typical values of the pressure in the reflected shock were around 7 atm, about two or three times those in the present work. The effect of pressure on the reaction is not known for this system. However, it is reasonable to suppose that increase in total pressure will increase the rate markedly (the order of reaction is commonly about two or three in fuel-oxygen systems) and that the induction period will be greatly reduced (Minkoff and Tipper, 1962). As some indication of the magnitude of the change in induction period to be expected, we can consider the slow combustion of 2-methylpentane; at about 450 °C, the induction period at 7 atm is is around 5 millisec, whereas at 2 atm it is about 200 millisec (Affleck and Fish, 1967). It appears probable, therefore, that the results of the present work relate to the early stages of the slow combustion of *n*-pentane, and this is consistent with the very low conversions observed.

TABLE II

Oxygenated Products of *n*-Pentane Combustion
Yields of products in moles × 10^9. Reaction conditions as given in Table I

Run No.	337	335	336	330	329	333
formaldehyde	—	0.13	0.466	0.172	1.47	1.77
acetaldehyde	0.307	0.648	2.57	1.19	31.0	57.3
propionaldehyde	—	0.587	1.40	0.99	10.9	14.5
acetone	1.32	2.26	3.76	1.01	14.3	18.4
methyl ethyl ketone	1.15	2.15	3.04	0.99	6.65	7.04
ethylene oxide	—	—	—	—	2.25	5.45
propylene oxide	—	0.235	1.21	0.37	3.95	5.42
acrolein	0.197	0.291	0.556	0.515	5.45	5.79
2,4-dimethyl-oxetane	—	0.196	0.185	0.236	3.14	3.92
2-methyl-tetrahydrofuran	—	0.313	0.48	0.272	3.23	3.34
moles *n*-pentane converted to oxygenated products × 10^9	1.953	4.538	8.374	3.54	46.15	64.81
moles *n*-pentane initially present × 10^9	6100	4890	4040	1390	1120	1050
conversion %	0.03	0.09	0.21	0.25	4.1	6.2

ED_005799A_00001883-00005

EPA-2021-004229

TABLE III

Comparison of selectivities (as defined in text) from various experiments

Run No.	337	335	336	330	329	333	H. and S.	K. and K.
formaldehyde	—	0.57	1.11	0.97	0.64	0.55	0.9	7.0
acetaldehyde	6.29	5.71	12.28	13.43	26.87	35.37	21.7	15.2
propionaldehyde	—	7.76	10.03	16.78	14.17	13.42	5.2	4.2
acetone	40.55	29.88	26.94	17.10	18.59	17.04	52.2	40.3
methyl ethyl ketone	47.10	37.9	29.04	22.35	11.53	8.69	5.6	13.9
ethylene oxide	—	—	—	—	2.18	3.36	—	—
propylene oxide	—	3.11	8.67	6.27	5.14	5.02	5.2	4.2
acrolein	6.05	3.85	3.98	8.80	7.09	5.36	—	—
2,4-dimethyloxetane	—	4.32	2.21	6.65	6.8	6.05	4.5	2.8
2-methyltetrahydrofuran	—	6.90	5.73	7.68	7.0	5.15	2.9	8.3
methanol	—	—	—	—	—	—	0.1	5.6

H. and S. = Hughes and Simmons.[3] 257 °C, O_2: fuel 1:1, conversion 1.48%.
K. and K. = Kinnear and Knox.[2] 250 °C, O_2: fuel 1:2, conversion 0.74%.

The difficulty of chain-initiation in these experiments, compared with those in a static system, suggests that in the latter, reaction chains may be started at the walls.

At temperatures as high as 600–800 °C, combustion reactions are frequently stated to give mainly small fragments including olefines. The results given by Affleck and Fish (1967), however, show that if the reaction times are kept short the reaction products above 400 °C are very similar to those below 300 °C. The present work supports this finding, the oxygenated products at 600–800 °C resembling those at 250–300 °C quite strongly. However, the yields of olefines were comparable to those of the oxygenated products and when detonation occurred, resulting in much higher temperatures and pressures being reached, larger yields of lower olefines (mainly ethylene) were obtained. The relative yields of the two classes of compound are given in Table 4.

In agreement with the findings of Dahm and Verhoek (1968) no pentenes were detected. This is surprising since other workers have found considerable amounts (Knox and Kinnear, 1971; Hughes and Simmons, 1969; Cullis *et al.* 1967). One possible explanation is that the conjugate olefine was formed heterogeneously in their experiments.

The comparison of the product yields in these experiments with those from static systems is not easy, because it was not possible to measure the very small consumption of *n*-pentane directly, nor were carbon monoxide and dioxide analyzed. For these reasons, the results have been calculated on the basis of the oxygenated products detected. From the amounts of these products found, the number of moles of *n*-pentane converted to oxygenates has been calculated, and a selectivity defined for a given product as the number of moles of *n*-pentane converted to that product divided by the

TABLE IV

Comparisons of Yields of Olefines and Oxygenated Products
Molar ratio O_2: *n*-pentane 8:1
Reaction time 2.25 millisec

Temperature °C	Yields of products as molar percentage of *n*-pentane originally present			
	C_2H_4	C_3H_6	C_4H_8-1	Total oxygenated products
636	0.61	0.06	n.d.	
638	0.70	0.05	n.d.	
664	3.32	0.30	0.04	
671				0.414
813	6.13	0.36	0.05	
818				7.39
850	8.70	1.04	1.13	

n.d. = not detected.

ED_005799A_00001883-00006

EPA-2021-004229

total moles of *n*-pentane converted to oxygenates. It is then possible to compare the selectivities, defined in this way, from the work of Hughes and Simmons (1969), Knox and Kinnear (1971) and ourselves. This comparison is presented in Table 3, and the resemblance between the sets of results is seen to be quite strong.

In the shock tube, the reactions are homogenous (as explained above) and the oxygenated products, including ketones, cannot have been formed by wall reactions. It seems almost certain therefore that these oxygenated products are also formed in homogeneous reactions at about 300 °C, and not at the wall, as suggested by Knox and Kinnear (1971).

The routes by which the products are formed can be discussed in a little more detail. At the temperatures employed in this work, chain propagation is likely to be mainly by the hydroxyl radical. Attack on the fuel by hydroxyl is unselective (Drysdale and Lloyd, 1970) and all three pentyl radicals will be formed. Oxygenated products will be formed via the pentylperoxy radicals resulting from oxygen addition to these pentyl radicals. The reactions of alkylperoxy radicals have been discussed many times (e.g. Fish, 1970).

The 1-pentylperoxy radical will form formaldehyde and butene-1 by internal H-abstraction round a six-membered ring followed by β-scission:

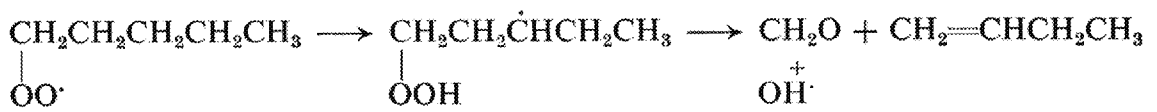

Ring-closure, rather than β-scission, would yield 2-ethyloxetane: this compound was not observed in the product of these experiments, nor was it found in the cool-flame reaction (Cullis *et al.* 1967). In addition the 1-pentylperoxy radical can give rise to 2-methyltetrahydrofuran

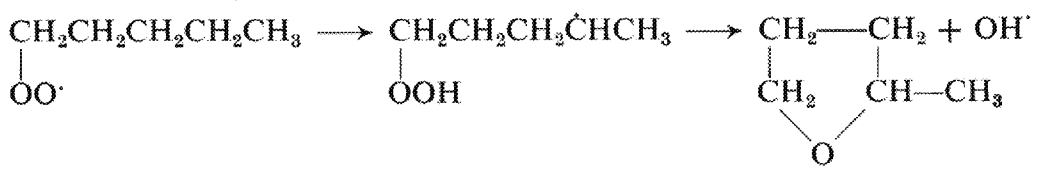

which can, however, also be formed from the 2-pentylperoxy radical (see below).

The pyran formed by internal abstraction from the 5-position, and the oxiran formed by abstraction from the 2-position were not found in the products.

The formation of propane, acetaldehyde, and 2:4-dimethyloxetane is easily understood if attack occurs at the 2-position, followed by transfer of a secondary hydrogen around a six-membered ring:

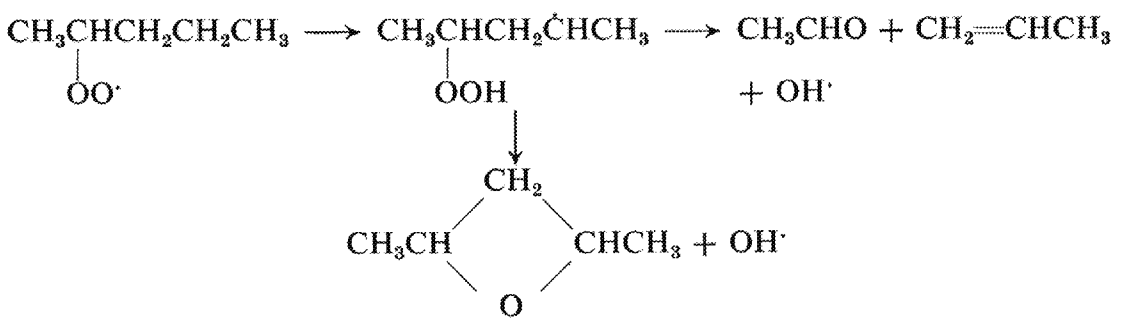

while transfer of a primary hydrogen around a seven-membered ring can yield 2-methyltetrahydrofuran or, possibly, acetone or propene oxide (see below). Neither of the oxirans formed by internal abstraction from the 1- or 3-positions were observed in the products.

On statistical grounds attack at the 2-position is twice as likely as attack at the 3-position. Nevertheless, the latter will occur and it seems probable that this is the source of the acrolein and propionaldehyde found in the products.

Again the oxirans were not observed and 2-ethyloxetane, which would result from ring-closure after H-abstraction from the 1-position, was also absent.

None of these reactions account for the formation of considerable amounts of methyl ethyl ketone. Furthermore, in previous work on *n*-pentane combustion Hughes and Simmons (1969) found that the acetone yield greatly exceeded that of ethylene. Consequently, reaction (X) could not be principal route by which acetone arose in their work. They therefore suggested an alternative

ED_005799A_00001883-00007

EPA-2021-004229

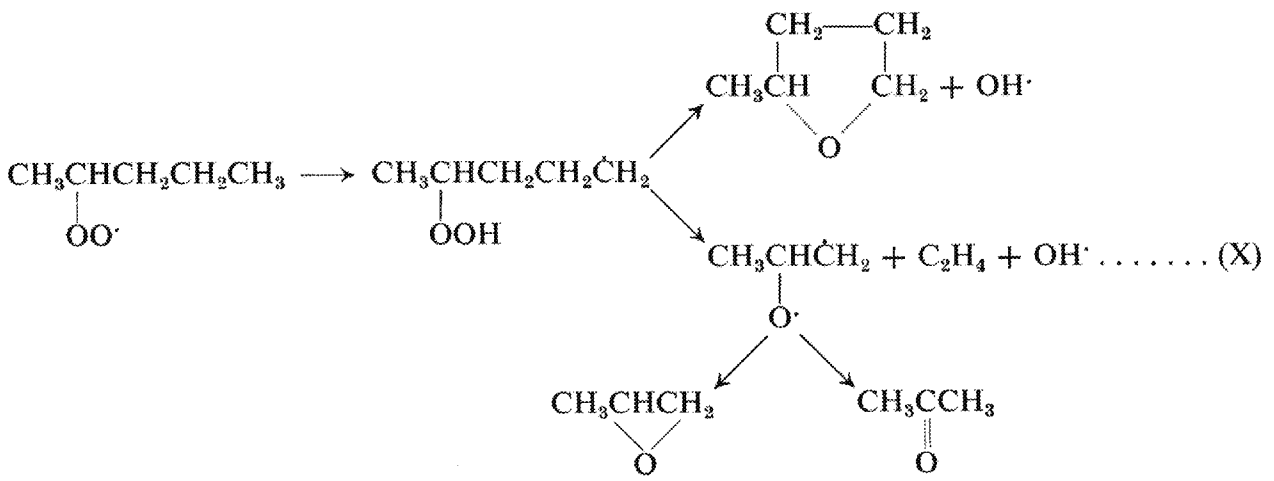

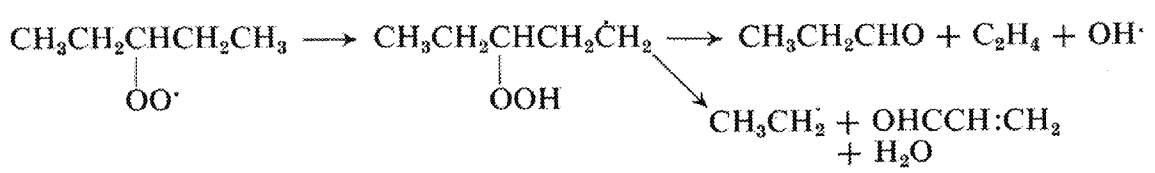

scheme in which the hydroperoxyalkyl radical underwent further oxygen attack:

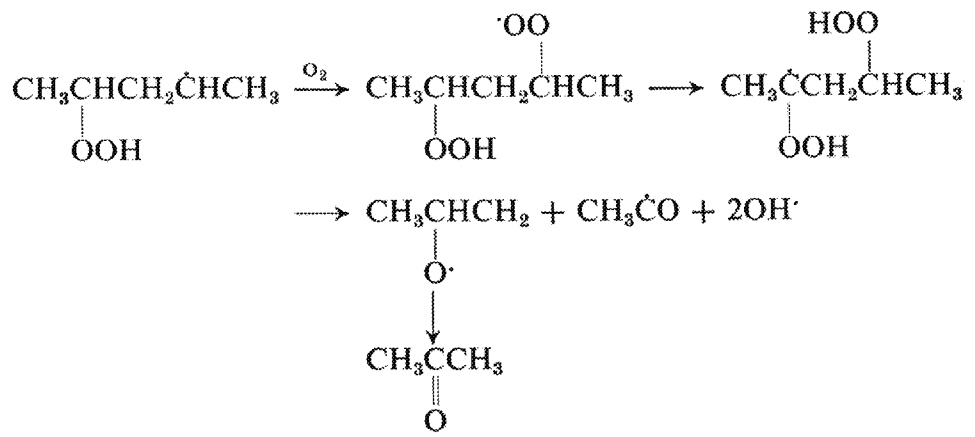

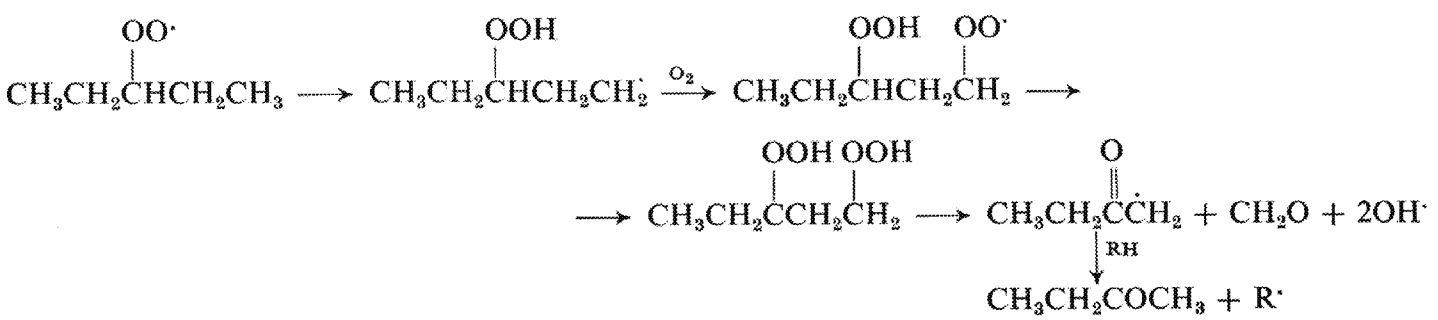

yielding eventually, either acetone or methyl ethyl ketone.

There is evidence for oxygen attack on peroxy radicals in other systems: thus the formation of molecular dihydroperoxides in *n*-heptane oxidation, (Bonner and Tipper, 1965) and the kinetics of acetone formation in neopentane combustion can only be explained in this way. (Baker *et al.* 1971).

However, ketones can be formed in at least one other way, namely alkyl group migration. Tracer

ED_005799A_00001883-00008

EPA-2021-004229

studies have shown that this occurs in other combustion reactions taking place under similar conditions (Cullis *et al.* 1963). The reactions suggested are

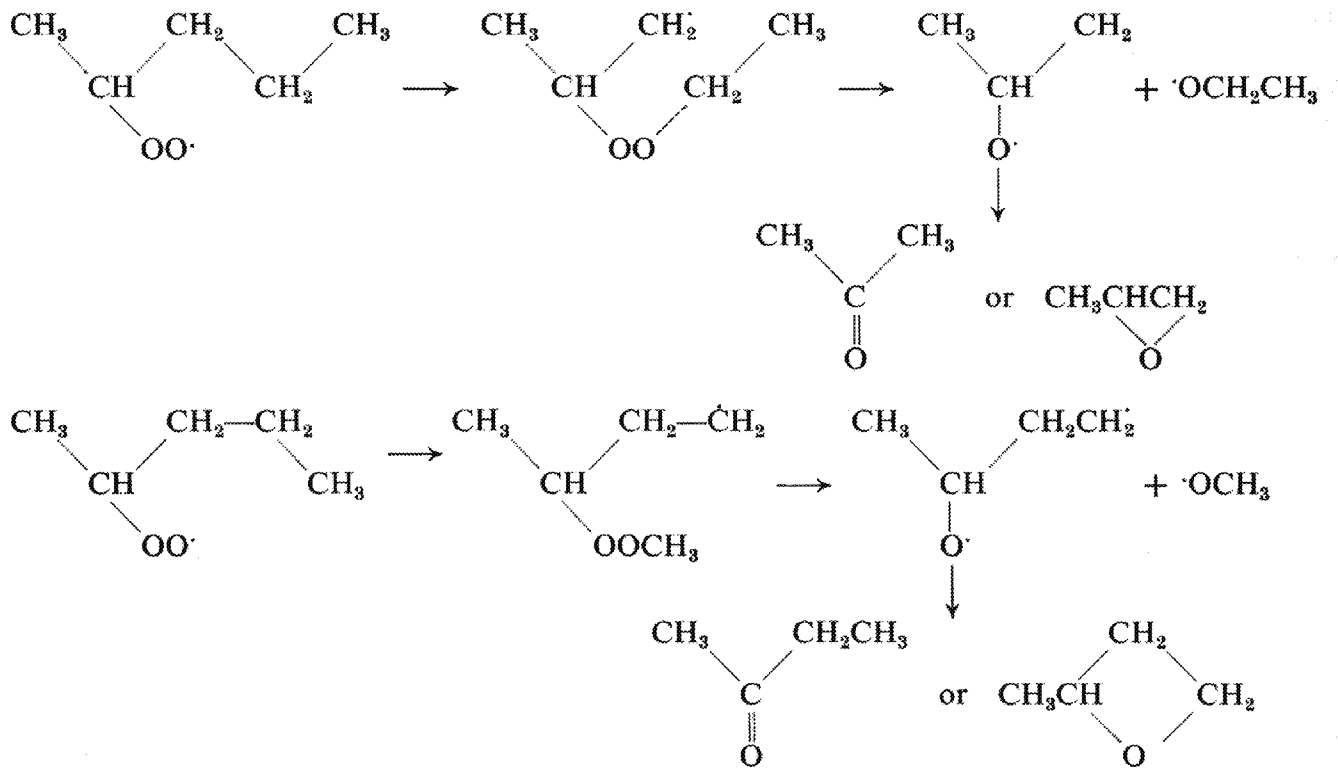

Cullis *et al.* (1967) regarded these reactions as unlikely in *n*-pentane cool flames, since the concurrently-formed alkoxy would have yielded at least some of the corresponding alcohols, and none was detected.

There is a further possibility. The rates of reaction in the shock-tube are high: under typical conditions 0.2% reaction is achieved in 2 millisec. This corresponds to a rate of reaction of approximately 15 torr/second which is, of course, higher than is normally observed in slow combustion. At such a high rate of reaction, radical concentrations must be high, and it may no longer be correct to ignore radical-radical processes, e.g.

$$2RO_2^{\cdot} \longrightarrow 2RO^{\cdot} + O_2$$

which are believed to possess low activation energies (Benson, 1965).

In the present system, several different RO_2 radicals will be present since alkyl radicals will be formed not only by H-abstraction from pentane, but also by pyrolysis of pentyl radicals. However,

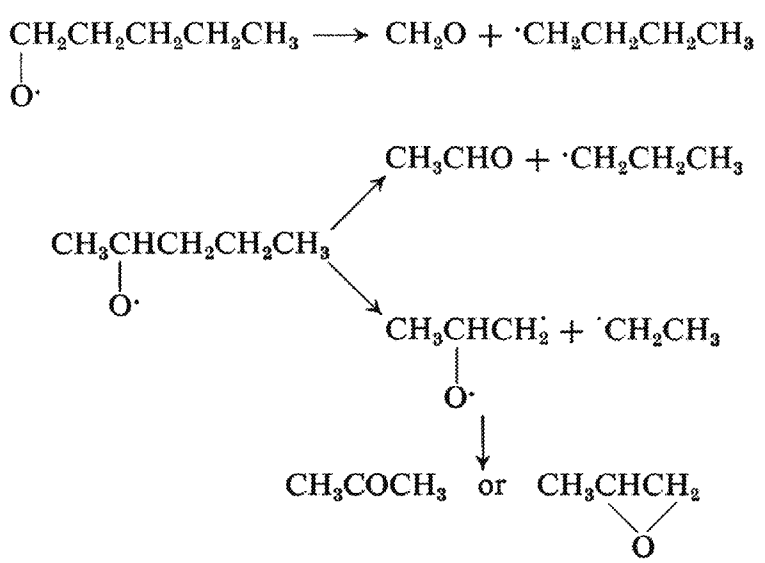

ED_005799A_00001883-00009

EPA-2021-004229

if radical-radical processes occur, they will yield alkoxy radicals which in turn will give aldehydes, and perhaps ketones.

This path is however, open to the same objections as were raised when considering alkyl group migration. At least some of the alkoxy radicals should have yielded the corresponding alcohols, whereas none were detected in this, or other (Knox and Kinnear, 1971; Hughes and Simmons, 1969) work. However, calculations based on the Arrhenius parameters given by Gray *et al.* (1967), suggest that decomposition of alkoxy radicals will predominate under the conditions prevailing in the shock.

It appears, therefore, that although the route by which the major products acetone and methyl ethyl ketone are formed is not established with certainty, the nature of the other reaction products shows clearly that H-transfer round a 5-membered ring transition state is not an important process under the present conditions. In agreement with Barat *et al.* (1971) it also appears that internal abstraction of a primary H is not favoured; with the exception of 2-methyltetrahydrofuran none of the products detected was formed by this route, and even the 2-methyltetrahydrofuran could be formed by another path.

REFERENCES

Affleck, W. S. and Fish, A., 1967, *Eleventh Symposium (International) on Combustion*, p. 1003. The Combustion Institute: Pittsburgh.

Baker, R. R., Baldwin, R. R., and Walker, R. W., 1970, *Combustion and Flame*, **14**, 31.

Barat, P., Cullis, C. F., and Pollard, R. T., 1971, *Thirteenth Symposium (International) on Combustion*, p. 179. The Combustion Institute: Pittsburgh.

Barnard, J. A., Lee, R. K.-Y., and Yates, J. G., 1972, in the press.

Barnard, J. A. and Seebohm, R. P., 1969, *Symposium on Gas Kinetics*, Szeged, p. 6.

Belford, R. L. and Strehlow, R. A., 1961, *Ann. Rev. Phys. Chem.*, **20**, 247.

Benson, S. W., 1965, *J. Amer. Chem. Soc.*, **87**, 972.

Bonner, B. H. and Tipper, C. F. H., 1965, *Combustion and Flame*, **9**, 317, 387.

Bradley, J. N. and Frend, M. A., 1971, *Trans. Faraday Soc.* **67**, 72; J. Phys. Chem. **75**, 1492.

Chung, Y. H. and Sandler, S., 1962, *Combustion and Flame*, **6**, 295.

Chung, Y. H. and Sandler, S., 1963, *Combustion and Flame*, **7**, 339.

Cullis, C. F., Fish, A., and Trimm, D. L., 1963, *Proc. Roy. Soc.* (London) Ser. A, **273**, 427.

Cullis, C. F., Saeed, M., and Trimm, D. L., 1967, *Proc. Roy. Soc. (London) Ser. A.*, **300**, 455.

Drysdale, D. D. and Lloyd, A., C., 1970, *Oxidation and combustion Reviews*, **4**, 157.

Dahm, D. B. and Verhoek, F. H., 1968, *Combustion and Flame*, **12**, 380.

Fish, A., 1970, *Organic Peroxides*, Vol. I., ed. Swern, Wiley: New York.

Fish, A., Haskell, W. W., and Read, I. A., 1969, *Proc. Roy. Soc. (London) Ser. A*, **313**, 261.

Gray, P., Shaw, R., and Thynne, J. C. J., 1967, *Prog. in* Reaction Kinetics, **4**, 63.

Hughes, R. and Simmons, R. F., 1969, *Twelfth Symposium (International) on Combustion*, p. 449. The Combustion Institute: Pittsburgh.

Hughes, R. and Simmons, R. F., 1970, *Combustion and Flame*, **14**, 103.

Kevorkian, V., Heath, C. E., and Boudart, M. 1960, *J. Phys. Chem.* **64**, 964.

Knox, J. H. and Kinnear, C. G., 1971, *Thirteenth Symposium (International) on Combustion*, p. 217. The Combustion Institute: Pittsburgh.

Lifshitz, A., Bauer, S. H., and Resler, E. L., 1963, *J. Chem. Phys.*, **38**, 2056.

Lucquin, M., 1958, *Bull. Soc. Chim. Fr.*, 1003.

Minkoff, G. J. and Tipper, C. F. H., 1962. *Chemistry of Combustion Reactions*. Butterworths: London 1962.

Seebohm, R. P., 1968, Ph.D. Thesis, London.

Tschuikow-Roux, E., Simmie, J. M., and Quiring, W. J., *Astronautica Acta*, **15**, 511.

Wing Tsang, 1963, *J. Chem. Phys.* **40**, 1498.

Wittliff, C. E., Wilson, M. R., and Hertzberg, A., 1959, *J. Aero/Space Sci.*, **26**, 219 1959.

Revised manuscript received July 12, 1972

ED_005799A_00001883-00010

Message

From: Brusstar, Matt [brusstar.matt@epa.gov]
Sent: 11/8/2019 8:18:41 PM
To: Cullen, Angela [cullen.angela@epa.gov]
CC: Sargeant, Kathryn [sargeant.kathryn@epa.gov]; Hoyer, Marion [hoyer.marion@epa.gov]
Subject: RE: ACTION by 11/12: SLT Backgrounder on EtO
Attachments: Ethylene Oxide and Mobile Sources status for SLT Nov 2019 AC MH MB.docx

Importance: High

Hi Angela,
Just one small revision, suggested by Bruce. I'm comfortable in saying that the NIOSH method may be potentially more reliable, for the reason provided in the included comment. However, if there's not consensus around that statement (it sounds a bit speculative) and you'd rather not include it, that's okay.
Thanks,
Matt

From: Cullen, Angela <cullen.angela@epa.gov>
Sent: Thursday, November 07, 2019 8:49 AM
To: Brusstar, Matt <brusstar.matt@epa.gov>
Cc: Sargeant, Kathryn <sargeant.kathryn@epa.gov>; Hoyer, Marion <hoyer.marion@epa.gov>
Subject: FW: ACTION by 11/12: SLT Backgrounder on EtO

Hi Matt,

One of the items required for the SLT retreat is a backgrounder on EtO. Marion and I have added a section to the end of the document we shared previously with the SLT and Sarah. This new section includes a little more detail on our mobile source testing, including the plans here at NVFEL. Would you please review? If possible, we would like to share a version with Bill on 11/12.

Please let us know if you would like us to share it with David when you are done with your edits or if you will be taking care of that.

Thanks!
Angela

Message

From: Sargeant, Kathryn [sargeant.kathryn@epa.gov]
Sent: 8/2/2019 6:24:08 PM
To: Hoyer, Marion [hoyer.marion@epa.gov]
Subject: Marion: TATD and the NRMRL one-pager

FYI only, close hold for now.
Do you know if Rich coordinated the wording of the NRMRL one-pager with anyone in TATD?

Subject: OTAQ and NRMRL Mobile Source Emissions Testing
Location: Kathryn's Office

Start: Mon 8/5/2019 9:30 AM
End: Mon 8/5/2019 10:00 AM

Recurrence: (none)

Meeting Status: Accepted

Organizer: Brusstar, Matt
Required Attendees: Sargeant, Kathryn

Hi Kathryn—

When this message (below) went out around a month ago, it made its way around to some of our Center Directors and to David, who expressed some concern about the specific wording in the attachment with regard to TATD. At the time, I had tried to allay their concerns by describing what I believed was the context/objective of the note, but this item has now come up in our managers' discussions more than once in the last month and so I'd like to spend 15-20 minutes with you to check my assumptions (or, even perhaps dispel some misconceptions about our lab's capabilities). If you're available on Monday morning, perhaps we can discuss.

Thanks,

Matt

From: Cook, Rich <Cook.Rich@epa.gov>
Sent: Tuesday, July 09, 2019 3:21 PM
To: Watkins, Tim <Watkins.Tim@epa.gov>
Cc: Sargeant, Kathryn <sargeant.kathryn@epa.gov>; Hoyer, Marion <hoyer.marion@epa.gov>; Bailey, Chad <bailey.chad@epa.gov>; Baldauf, Richard <Baldauf.Richard@epa.gov>; Brusstar, Matt <brusstar.matt@epa.gov>; Cullen, Angela <cullen.angela@epa.gov>; Olechiw, Michael <olechiw.michael@epa.gov>; Charmley, William <charmley.william@epa.gov>; Nelson, Brian <nelson.brian@epa.gov>; McDonald, Joseph <McDonald.Joseph@epa.gov>; Imfeld, Sterling <imfeld.sterling@epa.gov>; Shores, Richard <Shores.Richard@epa.gov>; Long, Thomas <Long.Thomas@epa.gov>; Vette, Alan <Vette.Alan@epa.gov>; Nunez, Carlos <Nunez.Carlos@epa.gov>; Hassett-Sipple, Beth <Hassett-Sipple.Beth@epa.gov>; Mazza, Carl

<Mazza.Carl@epa.gov>
Subject: OTAQ and NRMRL Mobile Source Emissions Testing

Tim –

OTAQ and NRMRL emission testing experts are currently collaborating closely on several projects, including a critical program to determine if ethylene oxide is present in mobile source emissions. We have had a number of staff and managers from OTAQ visit NRMRL in the last two months, to coordinate on current work, discuss future opportunities, and learn analytic methods. In addition, OAR is experiencing significant changes in senior management while ORD is undergoing major reorganization. Thus, we have developed the brief attached summary of the two dynamometer facilities, complementary capabilities, areas of current collaboration, and potential future work NRMRL may be able to help with that will provide substantial benefits to the public.

I hope you find this useful, and we would be happy to follow up with a discussion if you would like.

Rich Cook

Health Effects, Benefits, and Air Toxics Center

Assessment and Standards Division

Office of Transportation and Air Quality

U. S. Environmental Protection Agency

(734)214-4827

Message

From: Phelps, Lara [Phelps.Lara@epa.gov]
Sent: 6/24/2019 6:28:13 PM
To: Hoyer, Marion [hoyer.marion@epa.gov]
Subject: RE: Cross-office update on EtO activities

Thank you for the flexibility, Marion! We look forward to the conversation.

Lara P. Phelps, Acting Director
National Risk Management Research Laboratory, Air and Energy Management Division
U. S. Environmental Protection Agency, Office of Research and Development
109 T.W. Alexander Drive (E343-04), Research Triangle Park, NC 27711
Office: 919-541-5544 | Cell: 984-287-0594 | Email: phelps.lara@epa.gov

-----Original Message-----
From: Hoyer, Marion
Sent: Monday, June 24, 2019 2:04 PM
To: Phelps, Lara <Phelps.Lara@epa.gov>
Subject: RE: Cross-office update on EtO activities

Thanks for letting me know. We definitely don't want to have this without you all so I'll move it into next week.
Marion

-----Original Message-----
From: Phelps, Lara
Sent: Monday, June 24, 2019 1:07 PM
To: Hoyer, Marion <hoyer.marion@epa.gov>
Subject: RE: Cross-office update on EtO activities

Hi Marion!

Your meeting was forwarded to me, which I believe is an excellent idea. Is there any chance we could reschedule it to later this week or early next week? I have three conflicts during this time with one being an all hands event that impacts the entire AEMD portion of the invite list. If there is anything I can do to help with the discussion, I am happy to do so as well.

Thanks for considering!
Lara

Lara P. Phelps, Acting Director
National Risk Management Research Laboratory, Air and Energy Management Division U. S. Environmental Protection Agency, Office of Research and Development
109 T.W. Alexander Drive (E343-04), Research Triangle Park, NC 27711
Office: 919-541-5544 | Cell: 984-287-0594 | Email: phelps.lara@epa.gov

-----Original Appointment-----
From: Hoyer, Marion
Sent: Monday, June 10, 2019 6:18 PM
To: Hoyer, Marion; Yelverton, Tiffany; Geidosch, Justine; Loftis, Kathy; Kolowich, Bruce; Cullen, Angela; Olechiw, Michael; Nelson, Brian; Laroo, Chris; Fernandez, Antonio; Baldauf, Richard; McDonald, Joseph; Weinstock, Lewis; Shappley, Ned; Cook, Rich; Long, Thomas; Shores, Richard; Smith, Darcie
Cc: Kariher, Peter; Phelps, Lara; Walters, Charles; Chen, Xi; Noah, Greg; Rosati, Jacky
Subject: FW: Cross-office update on EtO activities
When: Thursday, June 27, 2019 8:00 AM-8:30 AM (UTC-05:00) Eastern Time (US & Canada).
Where: AA-Room-Office-C35-ConfRoom/AA-OTAQ-OFFICE

From: Hoyer, Marion
Sent: Monday, June 10, 2019 7:17:54 PM UTC
To: Hoyer, Marion; Yelverton, Tiffany; Geidosch, Justine; Loftis, Kathy; Kolowich, Bruce; Cullen, Angela; Olechiw, Michael; Nelson, Brian; Laroo, Chris; Fernandez, Antonio; Baldauf, Richard; McDonald, Joseph; Weinstock, Lewis; Shappley, Ned; Cook, Rich; Long, Thomas; Shores, Richard; Smith, Darcie
Subject: Cross-office update on EtO activities
When: Tuesday, June 25, 2019 6:00 PM-7:00 PM.
Where: AA-Room-Office-C35-ConfRoom/AA-OTAQ-OFFICE

I know I do not have all the invitees needed so please forward this to the necessary people (e.g., Doris).
Call-in number: 1-202-991-0477 8908907#

Agenda for this meeting:

* Update on EtO analytical methods
  * research aimed to achieve lower d.l.s
  * bringing methods on-line for in-house analysis of source samples being collected this year
* Update on source sampling
  * Mobile sources
  * Other?
* Ambient monitoring
  * Status of National Air Toxics Trends sites
  * Other updates?
* ORD Strategic Research Action Plan (StRAP) outputs and products related to EtO
* Any new intel from those attending conferences or other venues where contractors or academics are reporting on EtO evaluations?

Message

From: Sargeant, Kathryn [sargeant.kathryn@epa.gov]
Sent: 4/16/2019 1:37:52 PM
To: Hoyer, Marion [hoyer.marion@epa.gov]
Subject: RE: EtO testing in NRMRL

Oh good, I'm glad you mentioned Pb. I was going to talk to you yesterday about how to handle letting Chris know about that feedback from Josh/Wehrum, so I'm glad he has a heads-up.

From: Hoyer, Marion
Sent: Tuesday, April 16, 2019 9:02 AM
To: Sargeant, Kathryn <sargeant.kathryn@epa.gov>
Subject: RE: EtO testing in NRMRL

Yes, I was intending to write to you. On EtO he just wanted to know that he was caught up on the latest (did Sterigenics release their test results, are there other options for sterilizing equipment, are there more facilities like this in the country). I told him NRMRL is starting testing today but I honestly can't remember if I made sure he realizes this is a GDI and not a diesel engine. I also didn't get to fit in that they are testing a diesel that we are also getting some baseline data from for HD NOx....

I did fit in a quick note for Chris that you had correspondence with Josh L on Pb and that we would be getting on Bills and his calendar to discuss rollout.

From: Sargeant, Kathryn
Sent: Tuesday, April 16, 2019 8:18 AM
To: Hoyer, Marion <hoyer.marion@epa.gov>
Subject: RE: EtO testing in NRMRL

Thanks. Sorry I had to leave before your conversation with Chris was done. Anything I should know in terms of the types of questions he was asking, any direction/reaction you got from him, etc?

From: Hoyer, Marion
Sent: Tuesday, April 16, 2019 8:15 AM
To: Sargeant, Kathryn <sargeant.kathryn@epa.gov>; Geidosch, Justine <Geidosch.Justine@epa.gov>; Cullen, Angela <cullen.angela@epa.gov>; Olechiw, Michael <olechiw.michael@epa.gov>; Cook, Rich <Cook.Rich@epa.gov>; Laroo, Chris <laroo.chris@epa.gov>; Baldauf, Richard <Baldauf.Richard@epa.gov>
Subject: EtO testing in NRMRL

Just a quick update – I talked with Tom Long yesterday and they are starting testing today on the LD GDI truck specifically for EtO (they are using their own $ for now and will wait the long PALT time for our PR to reach them).

Justine found out that Ingrid is developing an analysis method in house for EtO and Tom said they are pulling extra canisters for Ingrid to see how her results compare with Enthalpy's.

Chris G asked about this yesterday after we briefed him on HEI and ORD issues so I gave him this update.

We should have results next week if all goes well.

Message

From: Olechiw, Michael [olechiw.michael@epa.gov]
Sent: 4/16/2019 1:45:43 PM
To: Hoyer, Marion [hoyer.marion@epa.gov]
Subject: RE: EtO testing in NRMRL

Marion,

Thank you for the update.

Mike

From: Hoyer, Marion
Sent: Tuesday, April 16, 2019 8:15 AM
To: Sargeant, Kathryn <sargeant.kathryn@epa.gov>; Geidosch, Justine <Geidosch.Justine@epa.gov>; Cullen, Angela <cullen.angela@epa.gov>; Olechiw, Michael <olechiw.michael@epa.gov>; Cook, Rich <Cook.Rich@epa.gov>; Laroo, Chris <laroo.chris@epa.gov>; Baldauf, Richard <Baldauf.Richard@epa.gov>
Subject: EtO testing in NRMRL

Just a quick update – I talked with Tom Long yesterday and they are starting testing today on the LD GDI truck specifically for EtO (they are using their own $ for now and will wait the long PALT time for our PR to reach them).

Justine found out that Ingrid is developing an analysis method in house for EtO and Tom said they are pulling extra canisters for Ingrid to see how her results compare with Enthalpy's.

Chris G asked about this yesterday after we briefed him on HEI and ORD issues so I gave him this update.

We should have results next week if all goes well.

Appointment

From: Cullen, Angela [cullen.angela@epa.gov]
Sent: 6/20/2019 3:18:38 PM
To: Cullen, Angela [cullen.angela@epa.gov]; Walters, Charles [walters.charles@epa.gov]; Fernandez, Antonio [fernandez.antonio@epa.gov]; Nelson, Brian [nelson.brian@epa.gov]; Imfeld, Sterling [imfeld.sterling@epa.gov]; Olechiw, Michael [olechiw.michael@epa.gov]; Hoyer, Marion [hoyer.marion@epa.gov]

Subject: Discuss EtO sampling at NVFEL
Location: AA-Room-Office-C147-ConfRoom/AA-OTAQ-OFFICE

Start: 6/24/2019 7:00:00 PM
End: 6/24/2019 7:30:00 PM
Show Time As: Busy

Required Attendees: Walters, Charles; Fernandez, Antonio; Nelson, Brian; Imfeld, Sterling; Olechiw, Michael; Hoyer, Marion

Agenda:

- Evaluate list of potential nonroad SI engines to test
- Determine the next steps for prepping the cell for summa canister sampling

Message

From: Long, Thomas [Long.Thomas@epa.gov]
Sent: 4/29/2019 12:19:01 PM
To: Hoyer, Marion [hoyer.marion@epa.gov]; Cullen, Angela [cullen.angela@epa.gov]; Cook, Rich [Cook.Rich@epa.gov]; Olechiw, Michael [olechiw.michael@epa.gov]; Nelson, Brian [nelson.brian@epa.gov]; Shores, Richard [Shores.Richard@epa.gov]; Baldauf, Richard [Baldauf.Richard@epa.gov]; McDonald, Joseph [McDonald.Joseph@epa.gov]; Laroo, Chris [laroo.chris@epa.gov]; Geidosch, Justine [Geidosch.Justine@epa.gov]
CC: Sargeant, Kathryn [sargeant.kathryn@epa.gov]; Charmley, William [charmley.william@epa.gov]
Subject: RE: NEED REVIEW ASAP - mobile source testing for EtO slide for ADD meeting

Looks good.

_____
Thomas Long, Mechanical Engineer
Mail Drop E343-02
Building D Room 360
109 T. W. Alexander Drive
Research Triangle Park, NC 27711
Phone: 919-541-3944

From: Hoyer, Marion
Sent: Sunday, April 28, 2019 8:11 AM
To: Cullen, Angela <cullen.angela@epa.gov>; Cook, Rich <Cook.Rich@epa.gov>; Olechiw, Michael <olechiw.michael@epa.gov>; Nelson, Brian <nelson.brian@epa.gov>; Long, Thomas <Long.Thomas@epa.gov>; Shores, Richard <Shores.Richard@epa.gov>; Baldauf, Richard <Baldauf.Richard@epa.gov>; McDonald, Joseph <McDonald.Joseph@epa.gov>; Laroo, Chris <laroo.chris@epa.gov>; Geidosch, Justine <Geidosch.Justine@epa.gov>
Cc: Sargeant, Kathryn <sargeant.kathryn@epa.gov>; Charmley, William <charmley.william@epa.gov>
Subject: NEED REVIEW ASAP - mobile source testing for EtO slide for ADD meeting
Importance: High

OAQPS has asked us to provide information on the mobile source testing for EtO being conducted at NRMRL for the ADD meeting which is occurring next week; the EtO session is May 7.

All - please let me know if you have any suggested changes to the slide. I think it is appropriate for us to keep the testing details to a minimum. I can insert some speaker notes so that Lew remembers that Enthalpy is the analytical lab conducting the work. Let me know if there are other details you think we should prepare Lew to know to respond to questions.

Just FYI, Karl Simon is attending the ADD meeting, but only for the mobile source session. Lew Weinstock who, with Alison Davis, is leading the coordination and communication on EtO will present this information on mobile source testing. I might be able to call in to answer questions or just listen so we can be aware of the ADDs perspectives and any input they are hearing on mobile sources and EtO.

I told Lew we'd have this slide to him by Wednesday this week, but if you can't look at it today or early tomorrow, please let me know. We'll of course want to send this to Chris before the ADD meeting too, so the sooner you can get me your input, the better.

Thanks much,
Marion

From: Weinstock, Lewis
Sent: Wednesday, April 24, 2019 1:18 PM

To: Hoyer, Marion <hoyer.marion@epa.gov>
Subject: EtO update for ADD meeting

Hi Marion:

We spoke briefly about an EtO session at the upcoming ADD meeting (May 7). Alison and I are co-leading the session with Mark Smith, the Reg 7 ADD. Would you be able to provide a summary slide (or two) on the work being coordinated with ORD? There will surely be interest in this information as we tee up issues related to background and source investigations.

I'm including a template slide if that would be helpful. If not, I'll take the information in any form and handle the formatting. Thanks in advance for your help!

Lewis Weinstock | Office of Air Quality Planning & Standards | U.S. Environmental Protection Agency | Research Triangle Park, NC 27711 | Phone: 919-541-3661|

Message

From: Weinstock, Lewis [Weinstock.Lewis@epa.gov]
Sent: 5/4/2019 9:33:32 PM
To: Hoyer, Marion [hoyer.marion@epa.gov]
Subject: RE: eto

Sure – I'll make the change. Thanks for the update.

Lewis Weinstock | Office of Air Quality Planning & Standards | U.S. Environmental Protection Agency | Research Triangle Park, NC 27711 | Phone: 919-541-3661|

From: Hoyer, Marion
Sent: Friday, May 03, 2019 11:43 AM
To: Weinstock, Lewis <Weinstock.Lewis@epa.gov>
Subject: FW: eto

Hi Lew, looks like we won't be getting those initial results on mobile eto for at least another week.
You might want to change the one line in that mobile testing slide as below:

- Testing is being performed at EPA Office of Research and Development
- Gasoline vehicle testing is complete, results expected ~~any day~~ soon
- Two diesel trucks will be tested in May/June timeframe

Thanks!
Marion

From: Long, Thomas
Sent: Friday, May 03, 2019 9:26 AM
To: Hoyer, Marion <hoyer.marion@epa.gov>
Subject: RE: eto

Sadly, Enthalpy claims to be a week behind. As part of being Category A for QA, our QA manager is supposed to review their report before I can use anything in it. She is usually very thorough but very prompt. I'll keep you updated on the status of their progress. Have a great weekend. (I'll be out on leave starting at 10 am)

Thomas Long, Mechanical Engineer
Mail Drop E343-02
Building D Room 360
109 T. W. Alexander Drive
Research Triangle Park, NC 27711
Phone: 919-541-3944

From: Hoyer, Marion
Sent: Friday, May 03, 2019 9:02 AM
To: Long, Thomas <Long.Thomas@epa.gov>
Subject: eto

Hi Tom, I don't know if you are able to call me when you see the report today, but if so, I'm certainly really interested. I'll be in until 3:30, but away from my desk for a few meetings.

Thanks,
Marion
734-214-4513

Message

From: Craig Williams [CWilliams@css-inc.com]
Sent: 5/22/2019 8:00:25 PM
To: Long, Thomas [Long.Thomas@epa.gov]
Subject: FW: WA34 and ANP
Attachments: COCLogs_WDP_5-22-2019.pdf

Hi Tom,
Attached is the COCLog with Jacob's QA Officer comments and highlights. I'd like to ask Russell and Daniel to meet with Wendy and I to go over her comments and the ask them to address/make her changes on a hard copy. Do you want to meet with us?

Craig

Craig Williams
Senior Engineer
Contractor to the USEPA
CSS (Jacobs Teammate)
Office Phone: (919) 541-0336
www.css-inc.com

From: Plessinger, Wendy [plessinger.wendy@epa.gov]
Sent: Wednesday, May 22, 2019 10:28 AM
To: Craig Williams
Subject: RE: WA34 and ANP

Craig, I've sent you the logs with my comments. It's going to look like a ripped it to shreds but its really just a few of the same types of errors throughout. I did not mark every error if it was a consistent one.

Consistent errors –
Not crossing out (date and initial) empty space
Not dating where initials have been used for a cross out
Illegible handwriting
Not adding AM or PM to the time recorded
Extraneous marks or numbers with no explanation

Wendy Plessinger, M.S. | Jacobs (contractor to US EPA) | EPA-RLS Quality Assurance Officer | 919.541.0185 | 803.319.0259 mobile | plessinger.wendy@epa.gov | wendy.plessinger@jacobs.com | www.jacobs.com

---

From: Craig Williams <CWilliams@css-inc.com>
Sent: Wednesday, May 22, 2019 9:20 AM
To: Plessinger, Wendy <plessinger.wendy@epa.gov>
Subject: RE: WA34 and ANP

Hi Wendy,
Sampling logs for all cans on the COC are attached. Exception is the Blank can "715".

Please call me after you have a chance to look them over.

Craig

Craig Williams

Senior Engineer
Contractor to the USEPA
CSS (Jacobs Teammate)
Office Phone: (919) 541-0336
www.css-inc.com

From: Craig Williams
Sent: Tuesday, May 21, 2019 3:26 PM
To: Plessinger, Wendy
Subject: RE: WA34 and ANP

Enthalpy COC is attached.

Craig Williams
Senior Engineer
Contractor to the USEPA
CSS (Jacobs Teammate)
1910 Sedwick Road
Durham, NC 27713
Office Phone: (919) 541-0336
www.css-inc.com

From: Plessinger, Wendy [plessinger.wendy@epa.gov]
Sent: Tuesday, May 21, 2019 1:56 PM
To: Craig Williams
Subject: RE: WA34 and ANP

No worries. I can come over around 3pm. Is that ok?

Wendy Plessinger, M.S. | Jacobs (contractor to US EPA) | EPA-RLS Quality Assurance Officer | 919.541.0185 | 803.319.0259 mobile | plessinger.wendy@epa.gov | wendy.plessinger@jacobs.com | www.jacobs.com

---

From: Craig Williams <CWilliams@css-inc.com>
Sent: Tuesday, May 21, 2019 1:48 PM
To: Plessinger, Wendy <plessinger.wendy@epa.gov>
Subject: RE: WA34 and ANP

Hi Wendy,
Sorry for the delayed response. I can meet anytime.

Thanks

Craig Williams
Senior Engineer
Contractor to the USEPA
CSS (Jacobs Teammate)
1910 Sedwick Road
Durham, NC 27713
Office Phone: (919) 541-0336
www.css-inc.com

From: Plessinger, Wendy [plessinger.wendy@epa.gov]
Sent: Monday, May 20, 2019 10:15 AM
To: Craig Williams
Subject: RE: WA34 and ANP

Craig, Can you and I meet to discuss this project? Since it has cat A attached to it, I'd like to dig in a bit and see where we stand with our portion and also see if there is anything we can help our customer with. When do you have time in the next couple of days? I am open all day tomorrow.

Wendy Plessinger, M.S. | Jacobs (contractor to US EPA) | EPA-RLS Quality Assurance Officer | 919.541.0185 | 803.319.0259 mobile | plessinger.wendy@epa.gov | wendy.plessinger@jacobs.com | www.jacobs.com

---

From: Craig Williams <CWilliams@css-inc.com>
Sent: Monday, May 20, 2019 9:54 AM
To: Singer, Carl <Singer.Carl@epa.gov>
Cc: Winterrowd, Chris <Winterrowd.Chris@epa.gov>; Plessinger, Wendy <plessinger.wendy@epa.gov>
Subject: RE: WA34 and ANP

No, nothing flowed down to me. I emailed the Enthalpy results PDF file to the WACOR and the EPA QA Officer as the WACOR directed on 5/14.

Craig

Craig Williams
Senior Engineer
Contractor to the USEPA
CSS (Jacobs Teammate)
1910 Sedwick Road
Durham, NC 27713
Office Phone: (919) 541-0336
www.css-inc.com

From: Singer, Carl [Singer.Carl@epa.gov]
Sent: Monday, May 20, 2019 9:41 AM
To: Williams, Craig
Cc: Winterrowd, Chris; Plessinger, Wendy
Subject: WA34 and ANP

From your WA34 QAPP:
Any work involving EtO currently falls under the advanced notification process (ANP) at EPA and must adhere to QA Category A requirements
Was there any requirement that flowed down to you from this ANP? Looks like it is all EPA review before releasing. We have other projects on EtO and I need to find what applies to us all.

Carl F. Singer | Jacobs | Senior Engineer II | Research Laboratory Support Team for EPA-RTP | 919.541.4217| 919.757.7543 mobile | singer.carl@epa.gov | carl.singer@jacobs.com | www.jacobs.com

Message

From: Phelps, Lara [Phelps.Lara@epa.gov]
Sent: 4/16/2019 8:10:48 PM
To: Nessley, Libby [Nessley.Libby@epa.gov]
CC: Long, Thomas [Long.Thomas@epa.gov]; Shores, Richard [Shores.Richard@epa.gov]
Subject: Re: Mobile Sources Updated QAPP & Truck Exhaust Addendum

Thanks Libby! As discussed in the hall, I am in agreement with your approach. I'll sign it before I leave and put on your desk, if you are gone. Hope the audit went well too.

Lara P. Phelps, Director
US EPA/NRMRL/AEMD
Sent from my iPhone

On Apr 16, 2019, at 4:00 PM, Nessley, Libby <Nessley.Libby@epa.gov> wrote:

Hi Lara,

I've left the revised Cat B QAPP and the new Cat A addendum in your chair for your signature. The Cat A addendum because it is ANP is the only document that requires your signature but it references major portions of the main QAPP. I made the executive decision that we did not need to do a full blown Cat A QAPP in R5 format. The ORD PPM only recommends that ANP be treated as QA Cat A so I feel like since this is an existing Cat B QAPP we don't need to reformat but we've added the audit requirements to fulfill Cat A. If you have any issues or concerns about that approach, we can discuss.

Thanks,

Libby

From: Phelps, Lara
Sent: Tuesday, April 16, 2019 12:43 PM
To: Nessley, Libby <Nessley.Libby@epa.gov>; Long, Thomas <Long.Thomas@epa.gov>
Cc: Shores, Richard <Shores.Richard@epa.gov>
Subject: RE: Mobile Sources Updated QAPP & Truck Exhaust Addendum

Thank you, Libby! Let's do our best to get signatures today, if possible. Thanks....

Lara P. Phelps, **Acting Director**
National Risk Management Research Laboratory, Air and Energy Management Division
U. S. Environmental Protection Agency, Office of Research and Development
109 T.W. Alexander Drive (E343-04), Research Triangle Park, NC 27711
Office: 919-541-5544 | Cell: 984-287-0594 | Email: phelps.lara@epa.gov

---

From: Nessley, Libby
Sent: Tuesday, April 16, 2019 12:40 PM
To: Long, Thomas <Long.Thomas@epa.gov>
Cc: Shores, Richard <Shores.Richard@epa.gov>; Phelps, Lara <Phelps.Lara@epa.gov>
Subject: Mobile Sources Updated QAPP & Truck Exhaust Addendum

Hi Tom,

Here are your copies of the clean word versions and pdf versions of the updated QAPP and new addendum to be passed around for signatures. I would suggest sending the contractor a version to review and sign first. When you get it back, you can sign, then pass to Richard, then Lara, then back here to QA to complete the loop. Let me know if you have any questions.

Libby

From: Long, Thomas
Sent: Tuesday, April 16, 2019 11:47 AM
To: Nessley, Libby <Nessley.Libby@epa.gov>
Subject: RE: QAPP

Added Robin Harris and the chart.

_____
Thomas Long, Mechanical Engineer
Mail Drop E343-02
Building D Room 360
109 T. W. Alexander Drive
Research Triangle Park, NC 27711
Phone: 919-541-3944

From: Nessley, Libby
Sent: Monday, April 15, 2019 2:53 PM
To: Long, Thomas <Long.Thomas@epa.gov>
Subject: RE: QAPP

There is a figure in Section 2 that needs to be updated-do you have a newer one you can clip a picture of to insert there?

From: Long, Thomas
Sent: Monday, April 15, 2019 2:23 PM
To: Nessley, Libby <Nessley.Libby@epa.gov>
Subject: RE: QAPP

_____
Thomas Long, Mechanical Engineer
Mail Drop E343-02
Building D Room 360
109 T. W. Alexander Drive
Research Triangle Park, NC 27711
Phone: 919-541-3944

From: Nessley, Libby
Sent: Monday, April 15, 2019 1:20 PM
To: Long, Thomas <Long.Thomas@epa.gov>
Subject: RE: QAPP

This e-mail had 2 of the same attachment. Did you mean to send only one attachment or did you want to attach the main QAPP? Were you ok with the revisions to it? Let me know and I'll get these cleaned up and ready to sign.

Thanks,
Libby

From: Long, Thomas
Sent: Monday, April 15, 2019 1:14 PM
To: Nessley, Libby <Nessley.Libby@epa.gov>
Subject: RE: QAPP

At this point Enthalpy, does not know if they can get a lower MDL than 10 ppb. By reducing the dilution on subsequent samples until their equipment begins to fail, they will determine what the lowest feasible MDL can be with the mix of gases in this specific vehicle's exhaust. They will try this with a few cans after all of the cans have been analyzed with an MDL of 10 ppb. I have attempted to provide an adequate response to your comments in the attached files. Thank you for your great support.

_____
Thomas Long, Mechanical Engineer
Mail Drop E343-02
Building D Room 360
109 T. W. Alexander Drive
Research Triangle Park, NC 27711
Phone: 919-541-3944

From: Nessley, Libby
Sent: Monday, April 15, 2019 12:35 PM
To: Long, Thomas <Long.Thomas@epa.gov>
Subject: FW: QAPP

From: Nessley, Libby
Sent: Thursday, April 11, 2019 1:40 PM
To: Long, Thomas <Long.Thomas@epa.gov>
Cc: Shores, Richard <Shores.Richard@epa.gov>
Subject: RE: QAPP

Hi Tom,

Since we are updating the main QAPP I went ahead and made other necessary updates. I think the addendum needs to be a bit more formal since the work is now Category A, so look over what I've done to that document and see if we can add the needed information. I'm also obligated to do a systems audit when we do the sampling/analysis and an audit of data quality when we're ready to report results, so keep me in the loop so we can schedule. If you didn't know-this Cat A advanced notification stuff is a major pain from a QA standpoint ☹

Thanks,
Libby

From: Long, Thomas
Sent: Tuesday, April 09, 2019 10:39 AM
To: Nessley, Libby <Nessley.Libby@epa.gov>
Cc: Shores, Richard <Shores.Richard@epa.gov>
Subject: QAPP

Libby,

I have modified the QAPP to include provisions to include EtO in our TO-15 analysis and added an addendum to describe our mini-study next week. Please find them attached. Changes made to the main QAPP appear in a bold red font.
Thanks.

_____

Thomas Long, Mechanical Engineer
Mail Drop E343-02
Building D Room 360
109 T. W. Alexander Drive
Research Triangle Park, NC 27711
Phone: 919-541-3944

Message

From: Craig Williams [CWilliams@css-inc.com]
Sent: 4/16/2019 7:11:33 PM
To: Long, Thomas [Long.Thomas@epa.gov]; Winterrowd, Christopher K [Christopher.Winterrowd@jacobs.com]
Subject: RE: QAPP signature requested ASAP
Attachments: 0030059-QP-1-5_FINAL_ Mobile Source Emissions Measurement and Characterization (20190415)-2_CKW_DCW.pdf; 0030059-QP-1-6_FINAL_Addendum 2 WA 34 Speciation of Exhaust Emissions from Trucks (20190416)_CKW_DCW.pdf

Hi Tom,
The QAPP and Addendum are signed and attached.

Craig

Craig Williams
Senior Engineer
Contractor to the USEPA
CSS (Jacobs Teammate)
1910 Sedwick Road
Durham, NC 27713
Office Phone: (919) 541-0336
www.css-inc.com

From: Long, Thomas [Long.Thomas@epa.gov]
Sent: Tuesday, April 16, 2019 12:53 PM
To: Winterrowd, Christopher K; Craig Williams
Subject: QAPP signature requested ASAP

There is an approval page for Chris' signature on page 2. Please review and sign ASAP (or director has requested today). Personnel names have been changed to reflect changes since 2016. Also, an Addendum was added to cover the current EtO measurements and analysis.

_____

Thomas Long, Mechanical Engineer
Mail Drop E343-02
Building D Room 360
109 T. W. Alexander Drive
Research Triangle Park, NC 27711
Phone: 919-541-3944

[SEQ CHAPTER \h \r 1]Project:	Mobile Source Emissions and Characterization: Speciation and Exhaust Gases from Trucks
Location:	USEPA/ORD/NRMRL/AEMD, Research Triangle Park, NC
Date:	April 16, 2019
Assessor:	Libby Nessley, AEMD QAM
Project Description:	The purpose of this study is to determine whether ethylene oxide (EtO) is found in exhaust from a mobile source using EPA Method TO-15. EtO is currently on the EPA Advanced Notification Process (ANP) list. This requires a higher level of QA. The scope of this audit is sampling for VOCs in SUMMA canisters that will be analyzed by Method TO-15 for a target list of compounds including EtO. The main QAPP for the Mobile Source Emissions and Characterization Laboratory is QA Category B 0030059-QP-1-5, the addendum describing the EtO tests is QA Category A 0030059-QP-1-6. QA Track Audit # G-AEMD-Audit 770

Question #	ITEM	Reference, Sections refer to QAPP or SOP	YES	NO	N/A	COMMENTS
A. QUALITY SYSTEM DOCUMENTATION and OPERATION						
1.	Is there a copy of the approved QAPP and relevant procedures on-site for reference during the project?	General	✓			Updated QAPP for EtO addendum being circulated for signatures.
2.	Have project participants been briefed in the requirements of the QAPP, facility manuals, and specified QA/QC requirements in SOPs or the cited methods?	General	✓			
3.	Are there deviations from the QAPP or SOPs?	General.		✓		

Additional Questions or Comments:

Laboratory general QAPP (Category B) and the addendum to cover the EtO sampling were updated and were making the rounds for signatures at the time of the audit. Facility personnel were briefed on the differences for these tests, which are:

- Ethylene oxide has been added to the TO-15 target compound list
- SUMMAs and sampling lines are silco lined
- EtO (10 ppm) will be spiked in to one of the composite canisters to demonstrate it can be recovered
- The AEMD QA Manager will perform a TSA during sampling and an ADQ on the Enthalpy data package

B. PROJECT RECORDS						
4.	Is method development research recorded in case-bound notebooks with a table of contents, pre-numbered/archival quality pages, and signature lines for completed pages?	PPM 13.02	✓			

Question #	ITEM	Reference, Sections refer to QAPP or SOP	YES	NO	N/A	COMMENTS
5.	Does the notebook contain a log of daily research activities, which includes an explanation of why that specific activity is being performed, observations, conclusions, and reference information for related project records that are generated and stored in other media (e.g., computer filenames, forms, instrument print-outs, and computers), as appropriate?	PPM 13.02	✓			Room for more detail, but information is clear.
6.	Are notebook entries signed and dated?	PPM 13.02	✓			
7.	Are notebook entries written in permanent, dark, non-fading, acid-free ink?	PPM 13.02	✓			
8.	Are notebook entries recorded when they are taken?	PPM 13.02	✓			
9.	Are notebook entries recorded in chronological order, without blank pages?	PPM 13.02	✓			
Additional Questions or Comments: Notebooks are generally in good shape. There could be more detail regarding research activities but the these are detailed in the QAPP which is referenced on the notebook page.						
C. CANISTER SAMPLING						
10.	Is a field blank prepared to demonstrate cleanliness of the canisters?	QAPP 4.4.7	✓			
11.	Are sample flows controlled by calibrated mass flow controllers?	QAPP 4.4.7	✓			
12.	Are sample lines coated with Silco?	QAPP 4.4.7	✓			
13.	Are 6L SUMMA canisters lined with Silco/Silonite?	QAPP 4.4.7	✓			
14.	Are run numbers affixed to the canisters for sampling identification?	QAPP 4.11	✓			

Question #	ITEM	Reference, Sections refer to QAPP or SOP	YES	NO	N/A	COMMENTS
15.	For each mobile source tested, are samples collected for one or more operating conditions?	ADDEND 1.1	✓			
16.	For each LDV does the test include the Supplemental FTP including the US06?	ADDEND 3.0	✓			
17.	For each HDV does the test include the HD-UDDS and include the option of sampling during a Carb Transient 3 driving schedule?	ADDEND 3.0	✓			Planned. Did not observe an HDV test.
18.	Is SUMMA cansiter sample taken from the diluted exhaust of the test vehicle for a least one test phase and one composite of multiple test phase?	ADDEND 4.1	✓			Phase 1 is always the single can. Composite cans are taken during Phase 2 and Phase 3.
19.	Is one sample taken from the dilution air prior to missing with the raw exhaust?	ADDEND 4.1	✓			
20.	Is one sample taken from the engine intake air?	ADDEND 4.1	✓			
21.	Is one of the composite SUMMA cans spiked with 10 ppb of EtO?	ADDEND 6.2	✓			

Additional Questions or Comments:

Observed test #113743 which was a light duty vehicle FTP test. Test started at 0956AM. Phase 1 can sampled at 674 cc/min for 505 seconds. Composite phase 2 and 3 can sampled at 180 cc/min for 1377 sec.

Question #	ITEM	Reference, Sections refer to QAPP or SOP	YES	NO	N/A	COMMENTS

Message

From: Nessley, Libby [Nessley.Libby@epa.gov]
Sent: 4/16/2019 4:40:22 PM
To: Long, Thomas [Long.Thomas@epa.gov]
CC: Shores, Richard [Shores.Richard@epa.gov]; Phelps, Lara [Phelps.Lara@epa.gov]
Subject: Mobile Sources Updated QAPP & Truck Exhaust Addendum
Attachments: 0030059-QP-1-5_FINAL_ Mobile Source Emissions Measurement and Characterization (20190415)-2.pdf; 0030059-QP-1-6_FINAL_Addendum 2 WA 34 Speciation of Exhaust Emissions from Trucks (20190416).pdf; 0030059-QP-1-5_CLEAN_ Mobile Source Emissions Measurement and Characterization (20190415)-2.docx; 0030059-QP-1-6_CLEAN_Addendum 2 WA 34 Speciation of Exhaust Emissions from Trucks (20190416).docx

Hi Tom,

Here are your copies of the clean word versions and pdf versions of the updated QAPP and new addendum to be passed around for signatures. I would suggest sending the contractor a version to review and sign first. When you get it back, you can sign, then pass to Richard, then Lara, then back here to QA to complete the loop. Let me know if you have any questions.

Libby

From: Long, Thomas
Sent: Tuesday, April 16, 2019 11:47 AM
To: Nessley, Libby <Nessley.Libby@epa.gov>
Subject: RE: QAPP

Added Robin Harris and the chart.

_____
Thomas Long, Mechanical Engineer
Mail Drop E343-02
Building D Room 360
109 T. W. Alexander Drive
Research Triangle Park, NC 27711
Phone: 919-541-3944

From: Nessley, Libby
Sent: Monday, April 15, 2019 2:53 PM
To: Long, Thomas <Long.Thomas@epa.gov>
Subject: RE: QAPP

There is a figure in Section 2 that needs to be updated-do you have a newer one you can clip a picture of to insert there?

From: Long, Thomas
Sent: Monday, April 15, 2019 2:23 PM
To: Nessley, Libby <Nessley.Libby@epa.gov>
Subject: RE: QAPP

_____
Thomas Long, Mechanical Engineer

Mail Drop E343-02
Building D Room 360
109 T. W. Alexander Drive
Research Triangle Park, NC 27711
Phone: 919-541-3944

From: Nessley, Libby
Sent: Monday, April 15, 2019 1:20 PM
To: Long, Thomas <Long.Thomas@epa.gov>
Subject: RE: QAPP

This e-mail had 2 of the same attachment. Did you mean to send only one attachment or did you want to attach the main QAPP? Were you ok with the revisions to it? Let me know and I'll get these cleaned up and ready to sign.

Thanks,
Libby

From: Long, Thomas
Sent: Monday, April 15, 2019 1:14 PM
To: Nessley, Libby <Nessley.Libby@epa.gov>
Subject: RE: QAPP

At this point Enthalpy, does not know if they can get a lower MDL than 10 ppb. By reducing the dilution on subsequent samples until their equipment begins to fail, they will determine what the lowest feasible MDL can be with the mix of gases in this specific vehicle's exhaust. They will try this with a few cans after all of the cans have been analyzed with an MDL of 10 ppb. I have attempted to provide an adequate response to your comments in the attached files. Thank you for your great support.

_____
Thomas Long, Mechanical Engineer
Mail Drop E343-02
Building D Room 360
109 T. W. Alexander Drive
Research Triangle Park, NC 27711
Phone: 919-541-3944

From: Nessley, Libby
Sent: Monday, April 15, 2019 12:35 PM
To: Long, Thomas <Long.Thomas@epa.gov>
Subject: FW: QAPP

From: Nessley, Libby
Sent: Thursday, April 11, 2019 1:40 PM
To: Long, Thomas <Long.Thomas@epa.gov>
Cc: Shores, Richard <Shores.Richard@epa.gov>
Subject: RE: QAPP

Hi Tom,

Since we are updating the main QAPP I went ahead and made other necessary updates. I think the addendum needs to be a bit more formal since the work is now Category A, so look over what I've done to that document and see if we can add the needed information. I'm also obligated to do a systems audit when we do the sampling/analysis and an audit of data quality when we're ready to report results, so keep me in the loop so we can schedule. If you didn't know-this Cat A advanced notification stuff is a major pain from a QA standpoint ☹

Thanks,
Libby

From: Long, Thomas
Sent: Tuesday, April 09, 2019 10:39 AM
To: Nessley, Libby <Nessley.Libby@epa.gov>
Cc: Shores, Richard <Shores.Richard@epa.gov>
Subject: QAPP

Libby,

I have modified the QAPP to include provisions to include EtO in our TO-15 analysis and added an addendum to describe our mini-study next week. Please find them attached. Changes made to the main QAPP appear in a bold red font.
Thanks.

_____

Thomas Long, Mechanical Engineer
Mail Drop E343-02
Building D Room 360
109 T. W. Alexander Drive
Research Triangle Park, NC 27711
Phone: 919-541-3944

NRMRL QUALITY ASSURANCE PROJECT PLAN

Office of Research and Development
National Risk Management Research Laboratory
Air and Energy Management Division
Distributed Source and Buildings Branch

Mobile Source Emissions and Characterization: Addendum 2-Speciation and Exhaust Gases from Trucks

EPA NRMRL Technical Lead Person: Thomas Long

Project Type: Measurement QA Category A

Extramural Research

QA Track 0030059-QP-1-6
Revision Number: 0
Date: April 9, 2019

Prepared by:
Thomas Long, EPA

EPA Contract Number: EP-C-15-008

National Program: Air-Energy
Project: Emissions Measurement 2-2

Approval Page

QA Project Plan Title:	**Mobile Source Emissions and Characterization: Addendum 2-Speciation and Exhaust Gases from Trucks**
NRMRL QA Tracking ID:	**0030059-QP-1-6**
If Intramural or Extramural, EPA NRMRL Project Approvals	
Name: Technical Lead Person (TLP) Thomas Long	Signature/Date:
Name: TLP's Supervisor Richard Shores	Signature/Date:
Name: QA Manager Libby Nessley	Signature/Date:
Name: AEMD Division Director Lara Phelps	Signature/Date:
Name:	Signature/Date:
If Extramural, Contractor Approvals	
Name: Contractor Manager/Lead Chris Winterrowd	Signature/Date:
Name: Contractor QA: Wendy Plessinger	Signature/Date:
Name: Other Contractors:	Signature/Date:
Name: Other Contractors:	Signature/Date:

The main QAPP that describes all activities related to the Mobile Sources and Emissions Measurement Facility is NRMRL QA Track ID 30059-QP-1-5. Generally, this facility conducts QA Category B research. For this specific project, AEMD has been asked to measure ethylene oxide (EtO) in the exhaust gas as a target compound. Any work involving EtO currently falls under the advanced notification process (ANP) at EPA and must adhere to QA Category A requirements. Additions and deviations from the main QAPP for this project are detailed here.

Section 1. Project Description and Objectives

Addition to Section 1.1.
The purpose of this study is to determine whether EtO is found in exhaust from a mobile source using EPA Method TO-15.

Addition to Section 1.2.
For each mobile source tested, samples may be collected for one or more operating conditions.

Section 2: Organization and Responsibilities

Addition to Section 2. The ANP requires upper management review that is in addition to the QA Category B NRMRL approval process. All ANP work must also be review and approved the AEMD's Division Director, Lara Phelps, and the NRMRL Deputy Director, Alice Gilliland, must be informed of the work.

Section 3: Scientific Approach

Addition to Section 3. For each Light-duty vehicle, the tests will include the Supplemental Federal Test Protocol including the US06. For each heavy-duty vehicle, the tests will include the Heavy-Duty Urban Dynamometer Driving Schedule (HD-UDDS) and include the option of sampling during a Carb Transient 3 driving schedule.

Section 4: Sampling

Addition to Section 4.1. For each day of testing, a summa can will be taken from the diluted exhaust of the test vehicle for at least one test phase and one composite of multiple test phases.

In addition, one sample will be taken from the dilution air prior to mixing with the raw exhaust and one sample will be taken from the engine intake air.

Modification to Section 4.4.7. For this study in which EtO will be reported, the sample lines will be coated with Silco. Samples will be collected into individually blank checked 6L Silco/Silonite lined sampling canisters

Section 5: Measurement Procedures

Addition to Table 5.1. Adding EtO to the list of analytes for VOCs. Canisters will be analyzed by GC/MS operating in the Selective Ion Mode.

Addition to Section 5. In addition to EPA Method TO-15, samples from the same passivated cans may optionally be analyzed using EPA Method 3C. The TO-15 target compound list will have a 10 ppb reporting limit or lower. EPA Method 3C (O_2, CO_2, CH_4, CO) will have a 0.10% reporting limit or lower.

Approximately 15 canisters collected from active combustion sources at a significant dilution will be analyzed with an expected reporting limit (RL) of 10ppb. After all samples have been analyzed at the first dilution (10 ppb RL), if samples do not have detectable concentrations of EtO, 1 sample per condition will be chosen and an attempt will be made to reanalyze these samples at a reduced dilution. The reduced dilution will result in a reduced RL. Samples will be introduced to the instrument at successively lower dilutions until the results have questionable validity from smearing/overloading the instrument with other inseparable species (like high CO/CO2, combustion products) or instrument operational viability becomes compromised.

Reactive compounds can damage the instrument and trapping system and this is usually observed by instrument noise increasing significantly or instrument response reduction. Instrument response reductions of greater than 30%, as quantified by internal standard abundances, indicate the system may be compromised. Attempts will not be made to reduce detection limits below 0.1ppb (due to risks involved in pushing the instrumentation past that level are significant).

The same canister will be analyzed for the TO-15 target compound list with a 10 ppb reporting limit and by EPA Method 3C (O2, CO2, Methane, CO) with a 0.10% reporting limit.

Up to 18 canisters will be analyzed at a 10 ppb RL, and up to 5 canisters at a 0.10 ppb RL.

Section 6: Quality Metrics (QA/QC)

Additions to Section 6.2. At least one blank, will be taken each week. Results from the blank canisters must to non-detects to be considered acceptable. One of the composite cans will be spiked with 10 ppb of EtO and analyzed. Recover of EtO from spiked canister must be within 20%.

Additions to Section 6.2.9. QA Category A requires that one technical systems audit (TSA) be performed early in the project to ensure that sampling and analysis is performed according to the QAPP and operating procedures used during execution of the project. The AEMD QA Manager will work with the EPA WACOR to schedule a TSA for any work involving sampling/analysis of EtO. In addition, an audit of data quality (ADQ) will be performed prior to reporting results. An ADQ traces the reported data back to the raw data to ensure it has been correctly transcribed, reduced, validated, and reported.

Section 7: Data Analysis, Interpretation, and Management

No change.

Section 8: Reporting Requirements

Addition to Section 8. As previously stated, EPA ANP requires that any project involving the measurement of EtO must be reviewed by AEMD's Division Director and NRMRL's Deputy Director prior to release. After results have been reviewed by the AEMD QA Manager and the ADQ completed, they will be submitted to the AEMD Division Director for review and approval. The AEMD Division Director will notify the NRMRL Deputy Director and facilitate further review, approval, and clearance.

NRMRL QUALITY ASSURANCE PROJECT PLAN

Office of Research and Development
National Risk Management Research Laboratory
Air and Energy Management Division
Distributed Source and Buildings Branch

Mobile Source Emissions and Characterization

EPA NRMRL Technical Lead Person: Thomas Long

Project Type:Measurement QA Category B

Extramural Research

QA Track 0030059-QP-1-5
Revision Number: 1
Date: April 9, 2019

Prepared by:
Thomas Long, EPA

EPA Contract Number: EP-C-15-008

National Program: Air-Energy
Project: Emissions Measurement 2-2

Approval Page

QA Project Plan Title:	**Mobile Source Emissions and Characterization**
NRMRL QA Tracking ID:	**0030059-QP-1-5**
If Intramural or Extramural, EPA NRMRL Project Approvals	
Name: Technical Lead Person (TLP) Thomas Long	Signature/Date:
Name: TLP's Supervisor	Signature/Date:
Name: QA Manager Libby Nessley	Signature/Date:
Name: Other EPA	Signature/Date:
Name: Other EPA	Signature/Date:
If Extramural, Contractor Approvals	
Name: Contractor Manager/Lead Chris Winterrowd	Signature/Date:
Name: Contractor QA: Wendy Plessinger	Signature/Date:
Name: Other Contractors:	Signature/Date:
Name: Other Contractors:	Signature/Date:

Table of Contents

[TOC \o "1-4" \t "Headline,1,Heading 1 no numbering,1"]

List of Tables

[TOC \h \z \t "Table Caption,2"]

List of Figures

[TOC \h \z \t "Figure Caption,2"]

List of Appendices

[TOC \n \t "Appendix Title" \c]

List of Acronyms

APPCD	Air Pollution Prevention and Control Division
ASCII	American Standard Code for Information Interchange
ASTM	American Society for Testing and Materials
B1	Building 1
B20	Biodiesel fuel blend; 20% biodiesel (v/v), 80 % Ultra Low Sulfur Diesel
C	Concentration
C1	Carbon # of 1 (methane)
C2	Carbon # of 2
C12	Carbon # of 12
CAAA	Clean Air Act Amendments
CAI	California Analytical Instruments
CARB	California Air Resources Board
CD-R	Compact Disk – Recordable
CEM	Continuous Emission Monitor
CFR	Code of Federal Regulations
CFV	Critical Flow Venturi
CG	Conventional Gasoline
CH_4	Formula for Methane
CLD	Chemiluminescence Detector
CO	Carbon MoNOxide
CO_2	Carbon Dioxide
CRC	Coordinating Research Council
CSV	Comma separated value
CV	Coefficient of variation
CVS	Constant Volume Sampler
DNPH	Dinitrophenylhydrazine
DQA	Data quality audit
DQI	Data Quality Indicators
E10	Ethanol fuel , 10 % ethanol / 90 % gasoline
E15	Ethanol fuel, 15 % ethanol / 85 % gasoline

E85	Ethanol fuel, 85 % ethanol / 15 % gasoline
ECPB	Emissions Characterization and Prevention Branch
EPA	Environmental Protection Agency
EPC	Environmental Particle Counter
EEPS	Engine Exhaust Particle Sizer
ERG	Eastern Research Group
ETBE	Ethyl-tertiary-butyl-ether
EtO	Ethylene oxide
F	Fahrenheit
FID	Flame Ionization Detector
FTP	Federal Test Procedure
GC	Gas Chromatograph
GM	Grams
GVWR	Gross Vehicle Weight Rating
H_2O	Water
HAP	Hazardous Air Pollutant
HC	Hydrocarbon
HCLD	Heated Chemiluminescent Analyzer
HDUDDS	Heavy Duty Urban Dynamometer Driving Schedule
HEPA	High Efficiency Particulate Air filter
HFID	Heated Flame Ionization Detector
HPLC	High Performance Liquid Chromatography
HR	Hour
IDL	Instrument detection limit
IQR	Interquartile Range
L	Liter
LA92	Los Angeles 1992
LPM	Liters per minute
MDL	Method detection limit
MFC	Mass Flow Controller
MG	Milligrams
MHDT	Medium Heavy Duty Truck
ML	Milliliter
MM	Millimeters

MOP	Miscellaneous Operating Procedures
MQL	Method Quantification Limit
MQO	Measurement Quality Objectives
MSAT	Mobile Source Air Toxic
MTBE	Methyl-tertiary-butly-ether
N	Number of measurements planned
N/A	Not applicable
NDIR	Non-dispersive infra-red
NIST	National Institute of Standards and Technology
NMHC	Non-methane Hydrocarbon
NMIM	National Mobile Inventory Model
NMOG	Non-methane Organic Gas
NO_x	Oxides of Nitrogen
NRMRL	National Risk Management Research Laboratory
OBDII	On-Board Diagnostics version 2
OD	Outside Diameter
ORD	Office of Research and Development
PAH	Polycyclic Aromatic Hydrocarbons
PE	Perfromance evaluation
PEMS	Portable Emission Measurement System
POM	Polycyclic Organic Matter
Ph1	Phase 1
Ph2	Phase 2
PI	Principal Investigator
PM	Particulate Matter
PPM	Parts per million
PPMC	Parts per million of carbon
PSI	Pounds per Square Inch
PTFE	Polytetrafluoroethylene
QA	Quality Assurance
QAPP	Quality Assurance Project Plan
OBDII	On-Board Diagnostic II
QC	Quality Control
QT	Quart

REMPI	Resonance Enhanced Multiphoton Ionization
RPD	Relative Percent Difference
RSD	Relative Standard Deviation
RTP	Research Triangle Park
RVP	Reid Vapor Pressure
S	Sample standard deviation
SAE	Society of Automotive Engineers
SCFM	Standard Cubic Feet per Minute
SOP	Standard Operating Procedure
SOW	Statement of work
SSE	Sum of Squared Errors
STD	Standard
TAME	Tertiary-amyl methyl ether
TBD	To Be Determined
THC	Total Hydrocarbons
TIC	Tentatively identified compound
TSA	Technical Systems Audit
TSI	Trust, Science, Innovation
UDDS	Urban Dynamometer Driving Schedule
ULSD	Ultra Low Sulfur Diesel
µG	Microgram
µL	Microliter
URL	Uniform Resource Locator
V	Number of Valid measurements
VOC	Volatile Organic Compound
WA	Work Assignment
WAL	Work Assignment Leader
WACOR	Work Assignment Contract Officer Representative
X	Sample mean

Distribution List

To facilitate distribution of the most recent versions of this Quality Assurance Project Plan (QAPP), a list of principal project participants is contained below (see Section 1 for contact information):

- Thomas Long, NRMRL
- Richard Baldauf, NRMRL
- Libby Nessley, NRMRL
- Chris Winterrowd, Jacobs
- Wendy Plessinger, Jacobs
- Billy Preston, Dymak

1. Project Description and Objectives

1.1 Study Purpose

The Mobile Source Emissions Measurement and Characterization (MSEMC) project utilizes any combination of a small engine dynamometer, a light-duty chassis dynamometer, a heavy-duty chassis dynamometer, and a portable emission measurement system (PEMS) to measure and characterize vehicle emissions in a variety of vehicle operating modes. This project supports the air- energy (A-E) project Emissions Measurement-2 (EM-2), Task 032. It supports the characterization of mobile source emissions in support of human health program areas, and supports other motor vehicle projects. The EPA's Motor Vehicle Emission Simulator (MOVES) model seeks to constantly strengthen the breadth and depth of data used to create emission factors to represent real world driving conditions, including roadway surfaces, traffic load, fuel effects, combustion technologies, and exhaust aftertreatments. In addition, the MSEMC team will provide speciated data to support the program office as it works to further understand the conditions resulting in the emission of Mobile Source Air Toxics (MSATs) which will allow for the development of mitigation strategies and refined modeling. Included in EM-2 is the use of speciated emission factors in the SPECIATE Database.

In preparation for generating those factors, the Mobile Source Emissions Laboratory at RTP validated a PEMS unit driving over the road and on a chassis dynamometer. This data demonstrated the similarities in emission rates over a dynamometer driving cycle. It also demonstrated a known difference. PEMS data is normalized to vehicle specific power (VSP) and dynamometer emissions are normalized to mass per vehicle mile travelled. The correlation was satisfactory when looked at in grams per mile, but emission rates in the higher VSP bins measure higher using the PEMS than using a CVS dilution tunnel. The raw bench was also used to compare to the PEMS measurements. While it picked up the higher emissions during high VSP excursions better than the CVS bench, it also spread those concentrations over more time than did the PEMS. These results are consistent with expectations in comparing the two types of sampling systems.

1.2 Scope and Objectives

The Air and Energy Management Division (AEMD) research supports the National Risk Management Research Laboratory's (NRMRLs) efforts to reduce greenhouse gas emissions and improve air quality. One way this is done is to support of the A-E

research program. EPA's A-E research program examines the interplay between air pollution and the dynamic energy sector to develop innovative and sustainable solutions for improving air quality. The results of the research efforts support policies that have far-reaching and positive impact across the nation.

The MSEMC project directly supports the A-E mission. Specifically, the EM-2 Project which seeks to improve emissions inventories using measurements and models. Task EM-2.2 (also known as Task 032) is the characterization of emissions from on-road and non-road mobile sources.

This QAPP is designed to provide the specifics of how quality assurance is applied to this task as well as other basic research to support US EPA goals.

This work has been designed to provide data to fill gaps, strengthen the statistical robustness of existing emission factors, and provide a laboratory environment in which new measurement methods and instruments can be evaluated for their potential to be used in the future to provide an improved means to characterize mobile source emissions. Data has been used to inform the MOVES.

The scope of data collection activities include the following:

- Testing will be conducted over the road with gaseous regulated emissions measured using PEMS. Onroad testing identifies operating modes that may be encountered in real world driving conditions that are not present during emission certification dynamometer driving schedules. Emissions occurring under these operating modes are referred to as off-cycle emissions. Identifying conditions which generate off-cycle emissions helps to inform MOVES and may indicate the need for the program office to conduct a larger study to support changes or improvements in emissions standards. Routes will be specified in an appendix for each Work Assignment (WA).

- Chassis dynamometer test cycles provide a means of generating emissions factors for regulated emissions and complementing those factors with speciated data. There is currently no reference method for speciating VOCs or SVOCs onroad. Because each driving schedule is extremely repeatable, emission factors from chassis dynamometer testing generally exhibit less variability. The test cycles themselves are selected to represent the vehicle operating modes relevant to the WA objectives. These test cycles will be included in the WA addendum.

- Core measurements for laboratory tests include Total hydrocarbons (THC), non-methane hydrocarbons (NMHCs), non-methane organic gas (NMOG), oxides of nitrogen (NO_X), nitrogen dioxide (NO_2), carbon monoxide (CO), carbon dioxide (CO_2), and particulate matter (PM) mass. will be measured on the chassis dynamometer.

- Core measurements for onroad tests include Total hydrocarbons (THC), oxides of nitrogen (NO_X), nitrogen dioxide (NO_2), carbon monoxide (CO), and carbon dioxide (CO_2). PM measurements are an option for specific WAs as indicated in the WA addendum. However, PEMS measurements typically will be gaseous only as supplemental AVL Mass Soot Sensor (MSS) PM measurements currently require the loan of equipment from the program office. Each WA appendix will reference the use of the AVL MSS when applicable.

- Speciated volatile organic compounds (speciated VOC), including C2-C12 hydrocarbons, light alcohols, and carbonyls will be determined during testing on the chassis dynamometer but not during onroad testing.

Project Schedule

- Submit QAPP
- QAPP Approval
- Day after QAPP approval begin testing
- One (1) week after sampling is completed begin data validation
- Six (6) weeks after sampling is completed begin report preparation
- Complete report prior to completion of the WA period of performance
- Each WA addendum will include specific schedule dates

2. Organization and Responsibilities

Areas of responsibility and contact information for personnel involved with this project are given in this section and shown in Figure 2-1.

Commented [NL1]: Change EPA QA to Libby Nessley. Jacobs QA to Wendy Plessinger, Safety to new person you'll have to get her name, and Technical Editor to Billy Comstock.

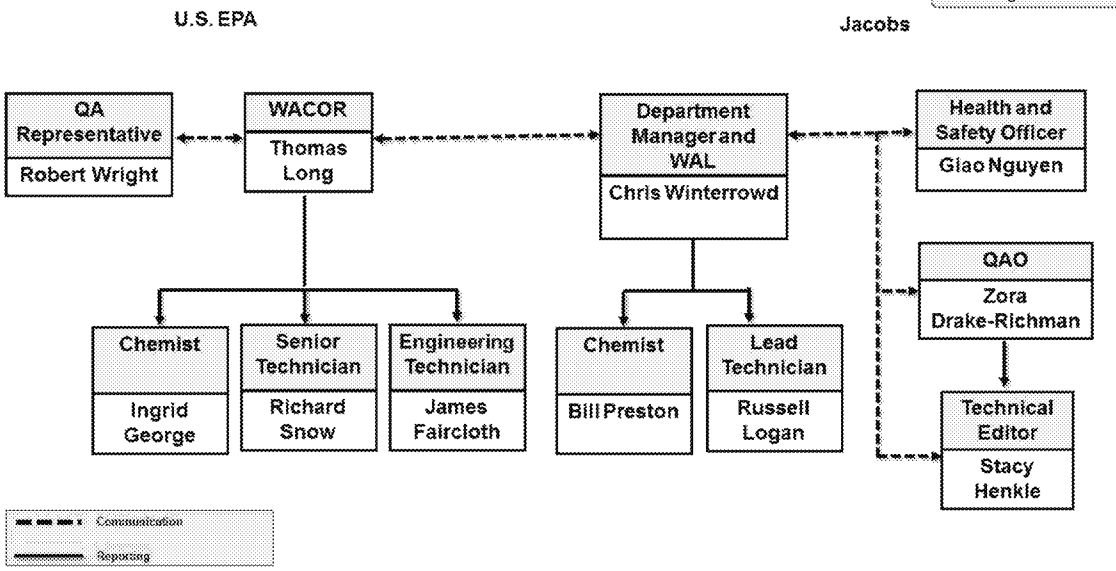

Figure [STYLEREF 1 \s]-[SEQ Figure * ARABIC \s 1]. Organization Chart

2.1 Project Personnel

EPA Project Officer, : will provide programmatic support to the project.

Phone: (919) 541-7906
Email: baily.robin@epa.gov

Commented [NL2]: Update.

EPA Work Assignment Contract Officer Representative (WACOR), Thomas Long: The EPA WACOR is responsible for communicating the scope of work and deliverables required for this WA. The EPA WACOR is responsible for preparing and, together with the Senior Engineering Technician, for maintaining and implementing the project

quality assurance project plan (QAPP). The EPA WACOR will share in the preparation of the project report.

Phone: (919) 541-3944
E-mail: [HYPERLINK "mailto:long.thomas@epa.gov"]

EPA Alternate Work Assignment Contract Officer Representative (WACOR), Richard Baldauf: The EPA Alternate WACOR is responsible for assuming the duties of the WACOR in the unlikely event that the WACOR becomes unavailable. The Alternate WACOR also provides expertise that may be utilized by the WACOR.

Phone: (919) 541-4386
E-mail: [HYPERLINK "mailto:baldauf.richard@epa.gov"]

JACOBS Program Manager, Chris Winterrowd: The Program Manager has overall responsibility for all tasks and WAs. The Program Manager will support technical planning, execution, data reduction, and reporting related to this WA.

Phone: (847) 420-8565
E-mail: [HYPERLINK "mailto:"]

EPA Chemist, Ingrid George: Will perform the analyses of the VOC canisters and DNPH cartridges.

Phone: (919) 541-9780
E-mail: [HYPERLINK "mailto:george.ingrid@epa.gov"]

EPA Senior Engineering Technician, Richard Snow: The Senior Engineering Technician will provide coordination in the field to EPA, JACOBS, and other scientists and technicians involved in this project. Together with the EPA WACOR, he is responsible for maintaining and implementing the project quality assurance project plan (QAPP). The Senior Engineering Technician is responsible for communicating any delays in scheduling or changes in cost to the EPA WACORs as soon as possible. The Senior Engineering Technician is to approve and implement corrective actions in the field. The Senior Engineering Technician is responsible for ensuring vehicle simulations are performed correctly and that dynamometer road load coefficients are appropriately calculated and applied. The Senior Engineering Technician will share in the preparation of the project report.

Phone: (919) 541-3135
E-mail: [HYPERLINK "mailto:snow.richard@epa.gov"]

EPA Engineering Technician Assistant, James Faircloth: The EPA Engineering Technician Assistant will serve as the test vehicle driver and be responsible for vehicle fuel changes and evaporative canister purging and other vehicle related duties. He will also assist the JACOBS Engineering Technician in maintenance and calibration of the test cell instruments and equipment. He will also be responsible for the weighing of 47-mm filters and operation of the heated filter collection station for the collection of 47-mm filters.

Phone: (919) 541-0363
E-mail: [HYPERLINK "mailto:faircloth.james@epa.gov"]

JACOBS WA Leader (WAL), Chris Winterrowd: The JACOBS WAL is responsible for preparing project deliverables and managing the contractor's contribution to the project. He will ensure that JACOBS meets scheduled milestones and stays within the budgetary constraints agreed upon by EPA. The WAL is responsible for communicating any delays in scheduling or changes in cost to the EPA Project Officer and WACORs as soon as possible. The WAL will also communicate with the JACOBS technical staff to ensure the project is carried out as planned. The WAL is also responsible for organizing a technical staff with the appropriate training and experience to carry out the data collection activities described in this QAPP. The WAL will arrange for all required independent sample and fuel analyses. The WAL is responsible for ensuring that test procedures and calculations performed comply with requirements of this QAPP. He is also responsible for reporting any data collection issues that may affect data quality to the JACOBS QA Officer.

Phone: (919) 541-1847
E-mail: [HYPERLINK "mailto:chris.winterrowd@arcadis-us.com"]

JACOBS Sampling Technician, Russell Logan: The Sampling Technician is responsible for preparing sample media and collecting samples from the dilution tunnel, including dinitrophenylhydrazine (DNPH) cartridges for carbonyls and SUMMA canisters for volatile organic compounds (VOC). He is also responsible for operation of the Exhaust Engine Particle Sizer (EEPS).

Phone: (919) 541-3810
E-mail: [HYPERLINK "mailto:russell.logan@Jacobs.com"]

CSS-Dynamac (Jacobs Teammate) Chemist, Billy Preston: The Chemist is responsible for analysis of oxygenates (ethanol and methanol) by gas chromatography (GC).

Phone: (919) 541-2719
E-mail : [HYPERLINK "mailto:bill.preston@CSS-Dynamac.com"]

Southwest Research Institute (SWRI), Robert Legg: Mr. Legg is the primary contact for SWRI, the subcontractor that will be performing fuel analyses when the EPA lacks the resources to do so internally.

Phone: (210) 522-2071
E-mail: [HYPERLINK "mailto:Robert.Legg@swri.org"]

2.2 QA Management

EPA QA Manager, Libby Nessley: The EPA QA Manager will be responsible for reviewing and approving this QAPP. This project has been assigned a QA Category B unless the specific project involves analysis of ethylene oxide (EtO) at which time the work will be required to meet QA Category A requirements. The EPA QA Manager is responsible for performing the required audit for QA Category A projects.

Phone: (919) 541-4502
E-mail: [HYPERLINK "mailto:wright.robert@epa.gov"]

2.3 Project Organization

JACOBS will receive technical direction from the WACOR. The EPA will be responsible for coordinating the laboratory activities of all on-site scientists and technicians, including JACOBS. The EPA must communicate their plans and schedule sufficiently to allow all personnel to be informed of when they must start and stop sampling or remove media for analysis. In the event that personnel are not prepared in a timely manner to perform duties they wish to coordinate with JACOBS activities, JACOBS will not stop or delay the activities within their area of responsibility without first consulting the WACOR (or alternate WACOR), should that delay or stoppage be reasonably anticipated to result in an increase in project cost.

Project responsibilities are broken down as shown in Table 2-1. The EPA will operate, maintain, and calibrate the dynamometers. JACOBS will operate, maintain, and calibrate the Constant Volume Sampler (CVS)-dilution tunnel systems for the collection

of vehicle exhaust. JACOBS will be responsible for providing all sampling media used for this project. JACOBS will be responsible for all media preparation and pre-sampled media storage, except for the PM gravimetric media and cleaned passivated cans, which will be prepared and stored by EPA. JACOBS will be responsible for operating and maintaining the sampling trains and collecting samples for all media except for the PM (gravimetric and speciated). JACOBS will be responsible for post-test storage and analysis of all media sampled for regulated emissions, oxygenates, and semivolatile organic compounds (SVOCs) collected on PUFs or Carbotrap adsorbent tubes. EPA will be responsible for post-test storage and analysis of media sampled for PM gravimetric, PM speciated, carbonyls, VOCs, and PM particle counts/sizes.

JACOBS will be responsible for the chain of custody of the media used for carbonyls, VOC collected in SUMMA canisters, oxygenates and SVOCs before they are handed off for analysis. JACOBS will be responsible for the chain of custody of oxygenate and SVOC samples at all times.

Table 2-1. Project Responsibilities

Analysis Type	Media Type	Media Provider	Media Preparation/Pre-sampling Storage	Sample Collection	Post-test Storage and Analysis	Database	Report Preparation
Carbonyls	DNPH Cartridges	JACOBS	JACOBS	JACOBS	EPA	EPA	EPA
PM Gravimetric	47 mm Teflo Filters	JACOBS	EPA	EPA	EPA	EPA	EPA
PM Speciated	47 mm Tissue Quartz Filters	JACOBS	JACOBS	EPA	EPA	EPA	EPA
VOC	SUMMA Cans	JACOBS	EPA	JACOBS	EPA	EPA	EPA
Regulated Emissions	Tedlar Bags	JACOBS	JACOBS	JACOBS	JACOBS	EPA	EPA
Ethanol/Oxygenates	Water Impingers	JACOBS	JACOBS	JACOBS	JACOBS	JACOBS	EPA
PM Particle Size/Counts	Continuous	NA	NA	EPA	EPA	EPA	EPA
SVOC	Carbotrap Tubes	JACOBS	JACOBS	JACOBS	JACOBS	EPA	EPA
SVOC	PUF	EPA	JACOBS	JACOBS	EPA	EPA	EPA

The EPA will be responsible for receiving the sampled media for carbonyls, speciated VOC (Summa cans), Teflon filters for fine particulate gravimetric analysis, quartz filters for archiving. EPA will then be responsible for analyses of these media.

The EPA will operate the dynamometers and JACOBS will operate the CVS systems. The EPA will be responsible for post-processing the gaseous and fine particulate (gravimetric) regulated emissions. The EPA will be responsible for post-processing the speciated VOCs, SVOCs, and carbonyls data. The EPA will be responsible for post-processing of any PM speciated data generated. JACOBS will be responsible for post-processing water impinger samples for oxygenates.

JACOBS will collect two one liter samples of fuel and one sample of lubricant for fuel and lubricant analyses at an EPA-approved laboratory.

3. Scientific Approach

Exhaust emissions will be characterized for a number and class of vehicles specified in each WA addendum.

Class 2b and heavier-duty vehicles when tested on a chassis dynamometer will have either one or two load test conditions as follows:

- Adjusted Loaded Vehicle Weight, as defined in 40 CFR 1066.805 (b), which is the average of the curb weight and the GVWR, or
- Both:
    - Unladen representing the curb weight of the vehicle including a driver and the PEMS.
    - Laden representing ninety percent of the Gross Combined Weight Rating (GCWR) or if testing will also be conducted with a PEMS onroad, the curb weight of the vehicle including a driver and the PEMS added to the curb weight of a loaded cargo trailer.

Light duty vehicles (Class 1 through Class 2a) will be tested at their emissions certification inertial weight or, if testing will also be conducted with a PEMS onroad, the curb weight of the vehicle including a driver and the PEMS. The emissions certification inertial weight is 300 pounds added to the curb weight of the vehicle, also known as the "loaded vehicle weight" as defined in 40 CFR 1066.805 (b). If OTAQ has performed emissions certification on this make and model, the MSEMC team will utilize the inertial weight and target dynamometer coefficients used in previous testing. This will allow direct comparison of regulated emission factors with those certification test results.

Fuel will be gasoline from a local distributor so that it is representative of fuel that would typically be available to the local consumer at the pump except in the case of fuel effects studies in which case fuel properties will be specified in the WA addendum, 1065.701(d).

Testing will be performed at EPA's facilities located in EPA's Research Triangle Park, NC, campus.

The light-duty chassis dynamometer has a 200 hp (149 kW) capacity capable of simulating up to 15,000 pounds of vehicle inertia with the load passing through the 48" rolls, a Constant Volume Sampler (CVS) and associated sampling equipment. The environmental chamber can house a LDV and control the ambient temperature in a range from -20 °F (-20 °C) to 110 °F (43 °C). The humidity of the engine intake air can be controlled for 70 °F (21 °C) to 50 grains of H_2O per pound dry air. For other temperatures, or simulating vehicle weights over 14,000 pounds, humidity is not controlled (40 CFR 1066.420).

The heavy-duty chassis dynamometer facility has a 1000 hp (746 kW) capacity with the load passing through 72" rolls, a CVS and associated sampling equipment. Ambient air is provided by the house air and controlled by the building's HVAC. There is also no extra humidity control. Testing will be conducted when the house air temperature is between the 20 °C (68 °F) and 30 °C (86 °F) as allowed by 40 CFR 1065.125.

Measurements will include modal and bag regulated pollutants (gases only), fine particulate matter ($PM_{2.5}$) for total mass and particle size and number, selected MSAT compounds and oxygenates. Both modal and bag measurements will be taken for carbon monoxide (CO), carbon dioxide (CO_2), oxides of nitrogen (NO_X), nitrogen dioxide (NO_2), total hydrocarbon (THC), and methane (CH_4). PM mass will be characterized by gravimetric analysis of 47-mm filters, and particle size/counts will be determined by continuous measurement using an Engine Exhaust Particle Sizer (EEPS) model 3090, manufactured by Trust, Science, Innovation (TSI). The MSATs to be characterized include acetcarbonyl, formcarbonyl, acrolein, benzene, 1,3-butadiene, naphthalene, ethylbenzene, toluene, styrene, o-xylenes, m & p xylenes, n-hexane, and 2,2,4-trimethylpentane (isooctane). Volatile Organic Compounds (VOCs) will be analyzed using EPA Method TO-15, carbonyls will be analyzed using EPA Method TO-11a, SVOCs will be analyzed using EPA Method TO-17.

The EPA will operate, calibrate, and maintain EPA's chassis dynamometer and chassis dynamometer constant volume sampling systems (CVSs) located in EPA's Research Triangle Park, NC, campus with support from Jacobs personnel. JACOBS will support emissions testing over the test cycles and sequences as specified in the WA addendum. The testing protocols will comply with 40 CFR Parts 1065[4] and 1066[7]. Each warm start test condition will be run on each vehicle at least three times and a fourth test may be necessary if emissions criteria found in Table 3-1 are not met during the first three tests. The same driver will be used for all chassis dynamometer tests on each test vehicle.

Table 3-1. Acceptable Variability Criteria for Replicates

Dilute Gaseous Emission	Criteria for requiring a third test day (composite cycle emissions)
CO_2	Percent Standard Error of the Mean≤3%
NO_X	Percent Standard Error of the Mean≤10%
THC	Percent Standard Error of the Mean≤15%

[REF _Ref443402297 \h] and [REF _Ref443402297 \h] provide a schematic layout of the CVS system used for collection of diluted vehicle exhaust samples during transient driving simulations. These schematics show relative locations of sampling points and required sampling configurations for the compounds to be measured in each work assignment. As depicted in the schematic, continuous emission monitor systems (CEMS) will be utilized for sampling and measuring the regulated emissions, THC, CO, CO_2, CH_4, NO_2, and NO_X. The CH_4 and THC analyzers have dedicated probes and sample lines. NO_X, CO and CO_2 are collected from a shared probe and distributed through a manifold. NO_2 is on separate probe. The NO_2 analyzer requires a much lower flow rate and has a slower response time than the NO_X analyzer. CVS bags are also collected and analyzed using the regulated emission CEMS as a QA check.

Samples for ethanol measurements will be obtained using two chilled sampling impingers filled with deionized water for each applicable phase of the driving cycle for subsequent analysis by GC. Samples for VOC analysis will be collected into passivated canisters through a metered flow system. Samples for carbonyl measurements are collected through a heated sample line on DNPH cartridges.

Samples for $PM_{2.5}$ mass will be collected on 47-mm Teflon filters. Samples for $PM_{2.5}$ will also be collected on 47-mm quartz filters and archived for a future analysis (to be determined [TBD]). There are four PM sampling probes. Typically, a probe is configured for collecting PM2.5 samples for gravimetric analysis ([REF _Ref443470233 \h]) or for an analysis of the ratio of elemental carbon to organic carbon. Some studies will also require polycyclic organic matter (POM) samples to be taken ([REF _Ref443459319 \h]). Each study addendum will show the sampling scheme of each of the four probes and cyclones used along with their associated four legs in a figure. The PM sampling probes are located in the dilution tunnel a distance of

not less than ten times the diameter of the dilution tunnel downstream from the mixing orifice.

Samples for PM counts and size distribution will be collected from quarter-inch stainless steel probes located adjacent to the PM filter sampling location.

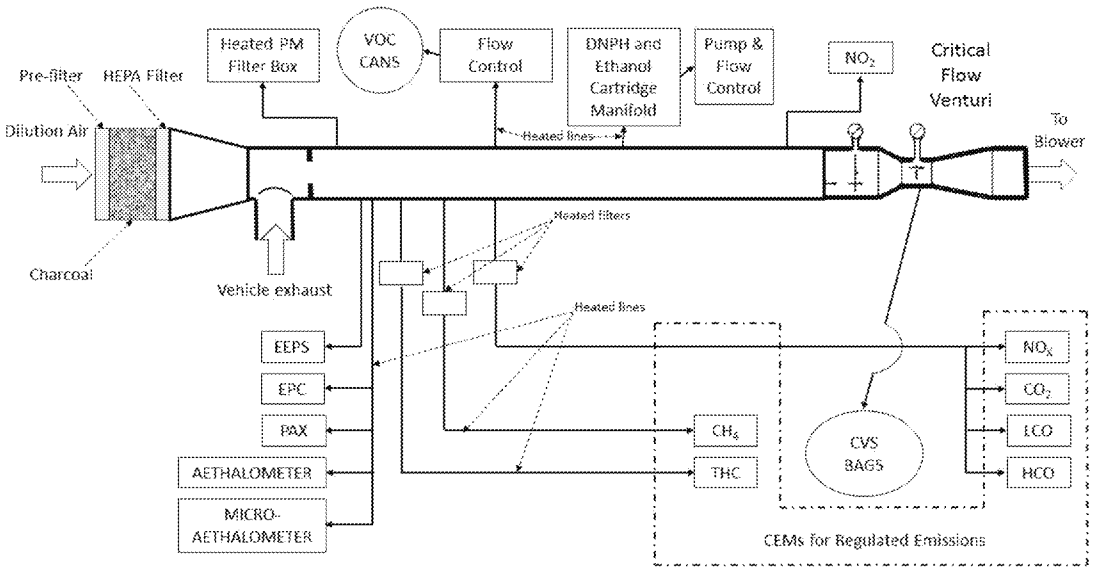

Figure [STYLEREF 1 \s]-[SEQ Figure * ARABIC \s 1] Light-Duty Dynamometer CVS Schematic

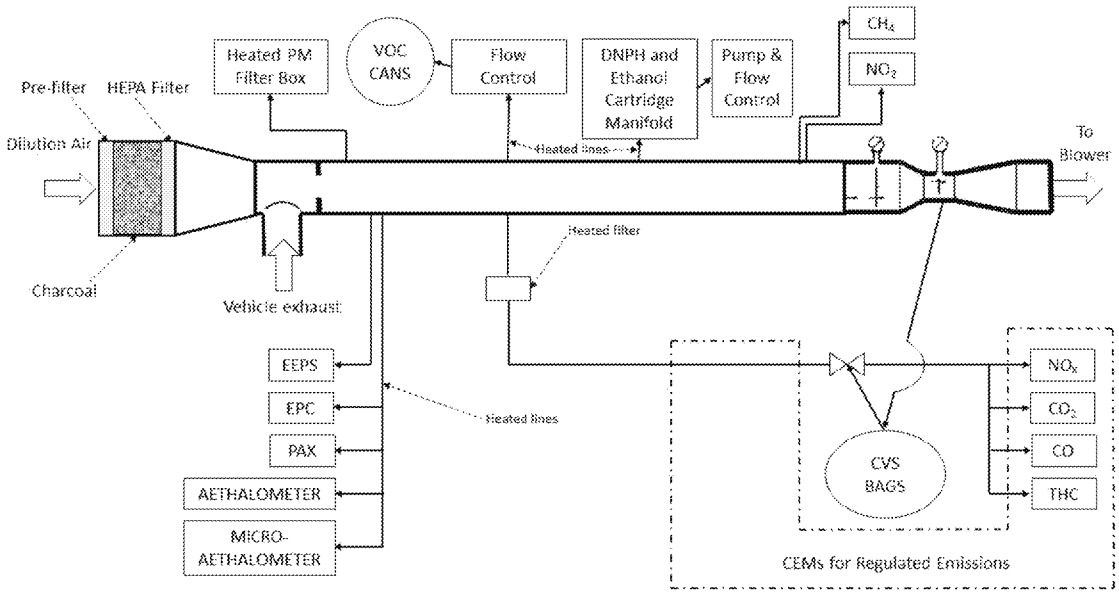

Figure [STYLEREF 1 \s]-[SEQ Figure * ARABIC \s 1] Heavy-Duty Dynamometer CVS Schematic

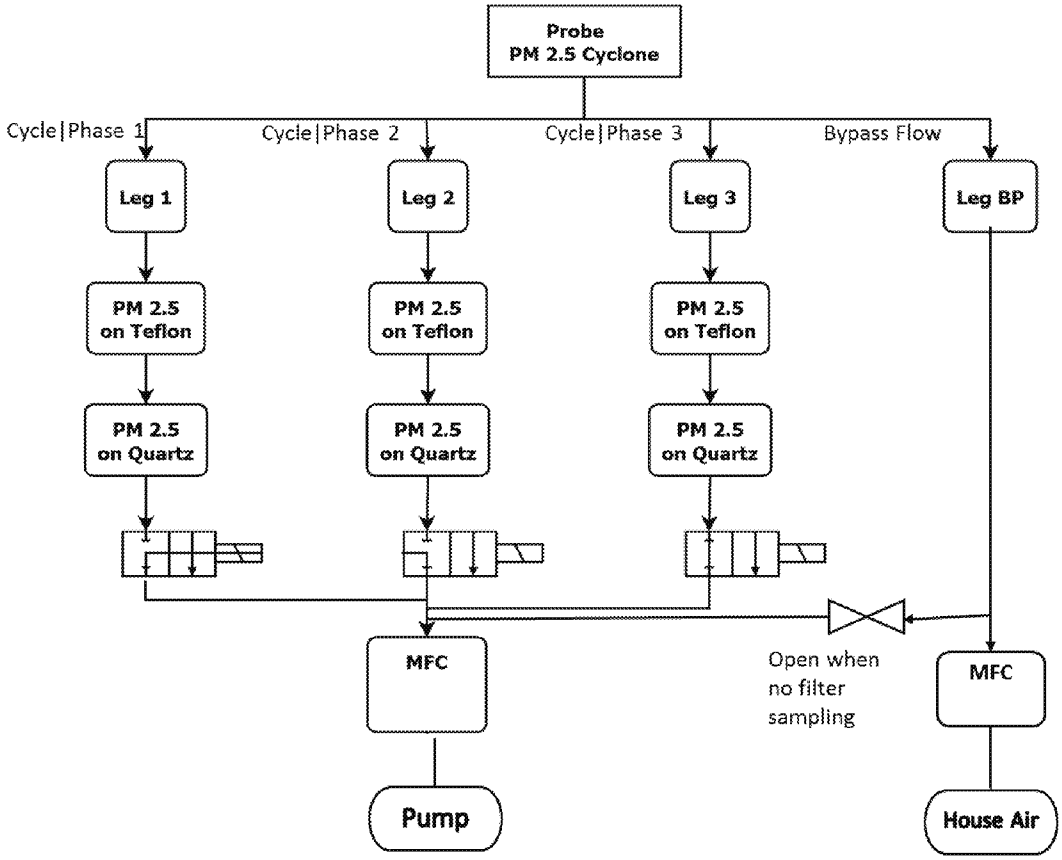

Figure [STYLEREF 1 \s]-[SEQ Figure * ARABIC \s 1]. Probe Sampling Schematic-Gravimetric PM

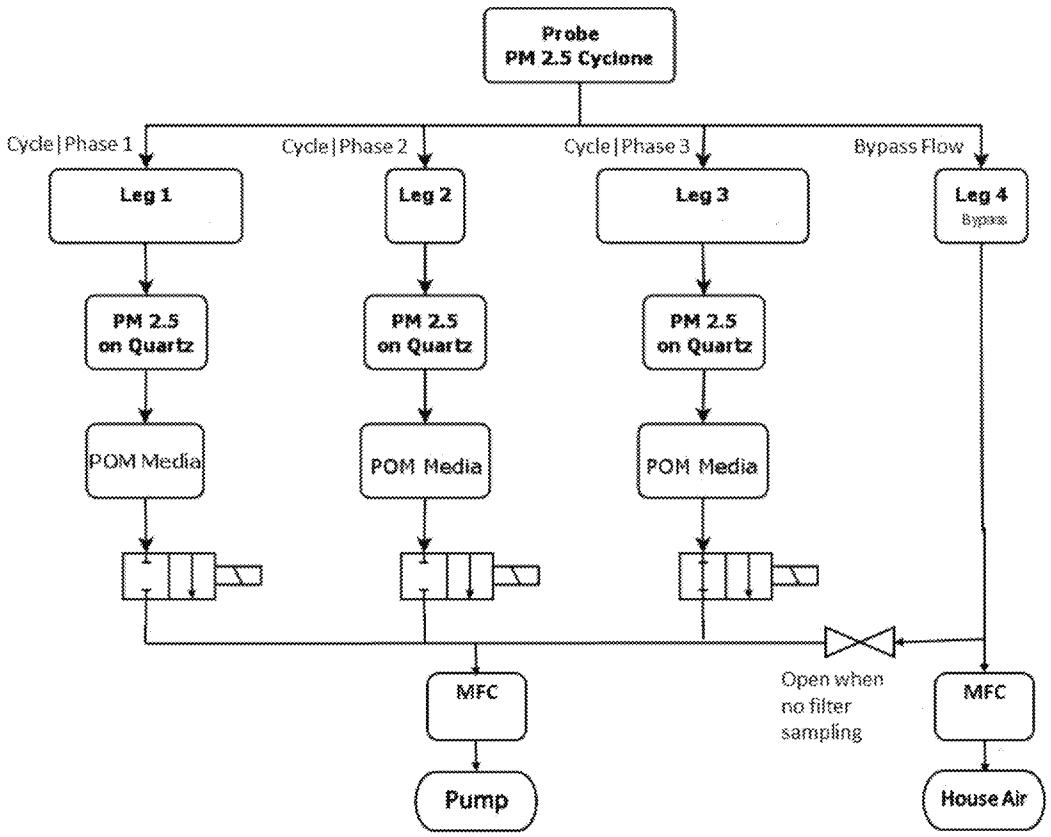

Figure [STYLEREF 1 \s]-[SEQ Figure * ARABIC \s 1]. Probe Sampling Schematic-POM ECOC

4. Sampling

4.1 Sampling Frequency/Test Matrix

The addendum for each WA will specify the range of the number of tests to be completed in any combination of the available test facilities (e.g. light-duty chassis dynamometer, heavy-duty chassis dynamometer, small engine dynamometer, or portable emissions measurement system). The addendum for each WA will specify the number and class of vehicles that will be tested. The addendum for each work assignment will specify the range of the number of replicates that will be required for each test condition.

As applicable to each WA, the addendum will provide a table of the test matrix for each facility that will be used. An example, of a chassis dynamometer test matrix is given in Table 4-1. The table shows that six replicates will be performed at each load condition for the warm start cycles and two for the cold start cycles. Three vehicles will be tested.

Table 4-1. Sample - Chassis Dynamometer Test Matrix

Veh #	Test Weight	Cold Start Replicates	Warm Start Replicates
1	Unladen	2	6
1	Laden	2	6
2	Unladen	2	6
2	Laden	2	6
3	Unladen	2	6
3	Laden	2	6

Because of the requirements of “cold-start” vehicle testing, the test vehicle must equilibrate at the test temperature for a period of 12 to 36 hours immediately prior to beginning each cold start test. For this reason, only one “cold-start” test may be performed per day on a vehicle.

Each emissions test will include a table of the types and number of samples as illustrated in Table 4-2. This table will specify the chassis dynamometer driving schedules (e.g., Heavy-Duty Urban Dynamometer Driving Schedule (UDDS)) or the onroad route(s) for PEMS tests. If the driving schedule will be broken into subparts, each phase will be represented in this table as well. This table will indicate which regulated emissions will be collected over each of the test phases or driving schedules. Background samples for regulated emission analysis will also be collected for all test

phases in Tedlar and/or Kynar CVS bags to satisfy requirements of the Code of Federal Regulations (CFR)[8]. The CEMS modal measurements do not include simultaneous background collection due to a lack of additional duplicate modal instrumentation. Therefore, background corrections for the modal data will be made using the background Tedlar and/or Kynar CVS bag measurements.

As applicable this table will also indicate the number of VOC, SVOC, and EC/OC samples which will be collected over each test. A background will be collected on each test day.

Separate carbonyl, oxygenate, and $PM_{2.5}$ samples will be collected for all chassis dynamometer test phases as well as for a background on each chassis dynamometer test day.

For chassis dynamometer testing, two samples will be collected per test phase for the $PM_{2.5}$ gravimetric samples collected on the Teflon filters. Only one gravimetric filter will be collected per phase for tests conducted at the heavy-duty dynamometer facility. A work assignment may also require one sample per test phase to be collected on quartz filters for archiving and future speciation using a TBD analysis. One background sample will also be collected per test for each emission type. Both gravimetric filters will be archived for future chemical analysis (one for thermal extraction, the other for organics from solvent extraction.

If speciation is required by the work assignment, VOC, carbonyl, oxygenate, and $PM_{2.5}$ sample field/lab blanks will be collected and analyzed on every week in which a vehicle test is performed. The passivated can, DNPH cartridge, and $PM_{2.5}$ Teflon filter used for blanks will be transported to the same collection location as those media in the same use during testing. For example, the $PM_{2.5}$ filters will be taken to the table beside the $PM_{2.5}$ cyclones, the DNPH cartridges beside the analytical bench, etc. The blanks will then undergo the same analysis as though they too had been used to collect samples.

Table 4-2. Sample - Types and Number of Samples per Test Day Sequence, Breakout by Test Cycle, Sampling Phase (Ph), Background (Bkg), and Total.

Sample Type	Media	CS Lower Trans	Warm Start Cycle	Bkg	Total
Regulated gaseous emissions	CVS Tedlar bag	1	3	4	7
Regulated gaseous emissions	CEMs (modal)	1	3	0	4
Particulate matter, gravimetric and metals	47 mm filter (Teflo, PallCorp R2PJ047)	1	3	1	5
Particulate matter, gravimetric and solvent extraction for organics*	47 mm filter (Teflo, PallCorp R2PJ047)	1	3	1	5
Particulate matter, EC/OC*	47 mm filter (Quartz)	1	3	1	5
Particulate matter, Artifact*	47 mm filter (Quartz)	1	3	1	5
Particle size/counts	EEPS (continuous) EPC (continuous)	1	3	1	5
VOCs	Passivated Can				
Carbonyls	DNPH cartridge	1	3	1	5
Oxygenates	Water impingers	1	3	1	5

4.2 Site-Specific Factors Affecting Sampling

Several site-specific factors may potentially impact sampling and should be monitored and/or controlled appropriately. These factors are described in the following sub-sections.

4.2.1 Pre-conditioning Dilution Air

Ambient air from within the building laboratory is used as dilution air for the vehicle exhaust. This dilution air is pre-conditioned to remove particulates and to stabilize hydrocarbon contaminants that may affect pollutant measurements. The conditioning includes a high-efficiency particulate air (HEPA) filter to remove fine particles and a charcoal bed to stabilize background HC levels. The charcoal bed cannot remove all contaminants, especially when contaminant concentrations are very high. Therefore,

operational staff needs to be alerted to potential sources of contamination, such as solvents, exhausts from nearby vehicles, and document in the laboratory notebook any observed sources of contamination. Background THC levels should be monitored prior to testing and testing should not commence until background THC levels are less than 4 ppm C.

The dilution air is maintained at laboratory facility temperatures (~ 70 °F).

4.2.2 Laboratory Conditions

Humidity and barometric pressure should have minimal impact on testing and sampling under our laboratory conditions. Both will affect vehicle operation and calibrated sampling flow rates but can be adequately accounted for by monitoring these parameters and applying the oxides of nitrogen correction factor. Test temperatures will have a large impact on vehicle emissions and should be controlled and monitored carefully. Test temperatures should have a minimal effect on sample collection, given that all sampling apparatus is operated at normal laboratory temperatures.

4.2.3 Sampling Trains

Much of the sampling apparatus incorporates heated sample lines and other heated components. Protective filters are also included in some of the sample streams to protect equipment from contamination. Checks are provided according to Appendix J, "JACOBS Protective Filter Check/Replace MOP", prior to the start of any test to insure that these components are operating correctly during testing. Temperatures as indicated on the digital temperature controllers are compared to setpoint temperatures, and any deviation from the setpoint in excess of that allowed by 40CFR1065.145(c)[9] will be cause for corrective action before proceeding with testing. Protective filters will be checked for loading according to the JACOBS Protective Filter Inspection MOP and replaced as indicated.

4.3 Site Preparation

The following site preparations are required prior to commencement of the test matrix:

- Procurement of calibration gases conforming to the standards of 40 CFR 1065.750. EPA Protocol gases meet this requirement and will be used. Concentrations will be 90 to 95 percent of the analyzer range to be used. EPA

Protocol Gases for CO, CO_2, and NO have pure Nitrogen as the diluent. Propane and methane use ultrapure air as the diluent.

- For testing on the light-duty chassis dynamometer (for both SI or CI vehicles) the nominal concentrations required are 90 to 95, 900 to 950, 4500 to 4750, and 9000 to 9500 ppm CO; 0.9 to 0.95 and 4.5 to 4.75 percent CO_2; 9 to 9.5, 90 to 95, and 900 to 950 ppm NO; 3, 30, and 300 ppm propane; 9 and 90 ppm methane.

- For testing SI or CI vehicles on the heavy-duty chassis dynamometer the nominal concentrations required for the dilute bench are 3, 150, and 300 ppm propane; 9 and 90 ppm methane; 9 to 9.5 , 90 to 95, 180 to 190, and 450 to 475 ppm NO; 45 to 47.5, 180 to 190, 900 to 950, 2250 to 2375 ppm CO; and 0.9 to 0.95 and 4.5 to 4.75 percent CO_2.

- For testing SI or CI vehicles on the heavy-duty chassis dynamometer the nominal concentrations required for the raw bench are 3, 150, and 300 ppm propane; 90 to 95, 450 to 475, 1350 to 1375, and 4500 to 4750 ppm NO; 45 to 47.5, 180 to 190, 900 to 950, 2250 to 2375, 4500 to 4750, 108000 to 114000 ppm CO; 0.9 to 0.95, 2.7 to 2.85, 9 to 9.5, and 22.5 to 23.75 percent CO_2; and 0.9 to 0.75, 2.7 to 2.84, 9 to 9.5 and 22.5 to 23.75 percent O_2

- For testing SI or CI engines on the small engine dynamometer the nominal concentrations required for the bench are 3, 30, and 300 ppm propane; 9 to 9.5 , 90 to 95, and 900 to 950 ppm NO; 90 to 95, 225 to 237.5, 450 to 475, 900 to 950, 9000 to 9500, 45000 to 475000 ppm CO; and 0.45 to 0.475, 0.9 to 0.95, 2.7 to 2.85, and 4.5 to 4.75 percent CO_2.

- For testing SI or CI vehicles on the PEMS the nominal concentrations required are 390 ppm propane; 1000 ppm NO; 200 ppm NO_2, 1200 ppm CO; and 12 percent CO_2.

- Gases named in accordance with 40 CFR 1066.135(a)(1) may be substituted for calibration gases applicable to the same range on a given analyzer.

- Procurement of test vehicles as specified in the WA addendum.

- Procurement of sampling media and other supplies. Required sampling media:

  - Teflon filters- Teflo 47mm PTFE 2.0 micron membrane filter Pall # R2PJ047

- Quartz filters- TissuQuartz QAT-UP/47 mm VRW#28150-901
- DNPH cartridges- Supelco LpDNPH H series cartridges H30
- Petri Dishes- Pall 7242

- Procurement of test fuel from a single batch representative of what is being locally distributed or a single batch of a fuel with custom properties specified in the work assignment.
- Initial calibration of regulated emissions CEMS, CVS flow rate, thermocouples, pressure transducers, and sample flow rates for any dynamometer laboratories to be used in the work assignment.
- Annual calibration of any dynamometer road load curves.
- Manufacturer calibration of all PEMS units to be used in the work assignment.

4.4 Test and Sampling Procedures

4.4.1 Vehicle Load Simulation and Operating Procedures

Vehicles heavier than Class 2b or physically too large to be tested on the light-duty chassis dynamometer will be tested on the heavy-duty chassis dynamometer. Road load simulation will be conducted on a 72" Renk dynamometer (heavy-duty dynamometer). Target vehicle road load coefficients for each test vehicle will be determined using the track coastdown techniques found in SAE J2263, *"Road Load Measurement Using Onboard Anemometry and Coastdown Techniques"* with the deviations cited in 40 CFR 1066 Subpart D[10]. Two test inertia weights will be used.

1. Laden = the measured curb weight of the vehicle with a PEMS unit plus 300 pounds for the driver plus the measured curb weight of the loaded cargo trailer.
2. Unladen = the measured curb weight of the vehicle with a PEMS unit plus 150 pounds for the driver.

If the WA does not require onroad testing with a PEMS, the weight of the PEMS will be set to zero in the above formulae.

Class 2a vehicles or lighter may be tested on the light-duty chassis dynamometer. Road load simulation will be conducted on a 48" Burke-Porter Motor-in-the-Middle (MIM) chassis dynamometer (heavy-duty dynamometer) capable of simulating up to 200 hp.

Target vehicle road load coefficients for each LDV will be taken from those used in certification testing when available. If certification coefficients are not available, they will be determined using the track coastdown techniques found in SAE J2263, *"Road Load Measurement Using Onboard Anemometry and Coastdown Techniques"* with the deviations cited in 40 CFR 1066 Subpart D[10]. The certification inertia weight will be used if available or the inertia will be set equal to the measured curb weight of the vehicle with a PEMS unit plus 150 pounds for the driver. If the work assignment does not require onroad testing with a PEMS, the weight of the PEMS will be set to zero in the above formula.

Dynamometer specific road load derivation will be performed for each vehicle using SAE J2264, "*Chassis Dynamometer Simulation of Road Load Using Coastdown Techniques*"[11].

Driving schedule, or test cycle, protocols will comply with 40 CFR Parts 1065 and 1066 and Part 86 Subpart N for HDVs and Part 86 Subpart C for LDVs. WA addendum will specify the number of replicates for each driving schedule as well as each phase of any multi-phase driving schedules (e.g., LA92). If the emissions criteria specified in Table 3-1 are not met over the number of replicates specified in the WA, an additional replicate will be executed. The same driver will be used for all chassis dynamometer tests on a given vehicle.

The sequence of events for chassis dynamometer testing requiring multiple fuels on an individual vehicle is summarized in the WA table, Fuel Change Sequence, e.g., Table 4-1. Each test day will be preceded by a prep cycle the previous day under the same inertial load condition. The need for a chassis dynamometer test day in addition to those scheduled in the test matrix will be determined based on the variability of the previous replicates (see Table 3-1).

Table [STYLEREF 1 \s]-[SEQ Table * ARABIC \s 1] Fuel Change Sequence

Step	Description
1	Warm up vehicle with a 10-minute idle immediately before fuel drain. Drain vehicle fuel completely via fuel rail whenever possible
2	Turn vehicle ignition to RUN position for 30 seconds to allow controls to allow fuel level reading to stabilize. Confirm the return of fuel gauge reading to zero.
3	Turn ignition off. Fill fuel tank to 40% with next test fuel in sequence. Fill-up fuel must be at 55 ± 5 °F.
4	Start vehicle, agitate the fuel by driving around the parking lot for 2 minutes, and then execute two back-to-back unsampled US06 cycles to purge sulfur from the catalyst. Alternately, at the special request of the EPA WACOR, the sulfur removal procedure described in CRC E-60 Program report (Included as Appendix A of this QAPP) will be used to purge sulfur from the catalyst. Side cooling fans will be used to maintain air flow around the fuel tank ,and the engine oil temperature will be monitored during the sulfur removal cycle.
5	Perform four vehicle coastdowns from 70 to 30 mph, with the last two measured. If the difference between the last two coastdowns exceeds 0.5 seconds, or their average differs by more than ± 7% from the running average for that vehicle, then the vehicle will be checked for any obvious and gross source of change in its mechanical friction. Side cooling fans will be used.
6	Drain fuel and refill to 40% with test fuel. Fuel temperatures will be maintained at 55 ± 5 °F during fill up.
7	Drain fuel and refill to 60% with test fuel. Fuel temperatures will be maintained at 55 ±5 °F during fill up.
8	Soak vehicle for at least 12 hours to allow fuel temperature to stabilize to the test temperature.
9	Start vehicle and perform three LA-92 (phases 1 and 2) prep driving cycles. Following the first two prep cycles, allow the vehicle to idle in park for 2 minutes, and then shut the engine off for 2 to 5 minutes. Following the last prep cycle, allow the vehicle to idle for 2 minutes, and then shut down the engine in preparation for the soak. Side fans will be used to maintain air flow around the vehicle's fuel tank during the prep cycles.
10	(reserved)
11	Park vehicle in soak area at proper temperature (20 °F and 75 °F) for 12 to 36 hours. During the soak period, maintain the nominal charge of the vehicle's battery using an appropriate charging device.
12	(reserved)

Weighting factors will be used to calculate composite emissions and will report bag (phase) level and total test cycle work measured at the wheels.

Fuel will be stored in sealed containers (55-gallon steel drums) in the temperature controlled fuel storage shed located adjacent to Building E on EPA's RTP campus. The shed temperature will be controlled at 55 ± 2 °F (12.8 ± 1.1 °C) to minimize loss of volatile components and /or formation of condensation and the growth of microbes in the fuel using the shed's existing thermostated heating/cooling system.

In addition to manufacturer's analysis, all test fuels used will be analyzed independently for detailed HC (ASTM D6729)[14], Reid Vapor Pressure (ASTM D5191)[17], and Hydrogen/Carbon content (ASTM D5291)[19]. A fuel analysis will be performed before and after execution of the test matrix. The fuel analyses will be performed by Southwest Research Institute or the EPA OTAQ and results will be received, reviewed, and reported by the EPA MSEMC team.

Engine coolant temperature will be measured using an On-board diagnostic (OBDII) scanner manufactured by Autotap, AutoEnginuity, or their equivalent. OBDII diagnostic tools require that the vehicle's ignition switch be in the "on" position, so overnight logging using this tool is impractical. Its use should be satisfactory, however, for a 4- to 6-hour time period. Scanned temperatures will be logged to a CSV data file for future reference. Oil temperature from the vehicle's sump will also be measured and recorded prior to each test.

4.4.2 Dilution Tunnel/Constant Volume Sampler

The CVS and associated dilution tunnel will be calibrated and operated according to procedures found in CFR 40 Part 1065 Subpart D. Within this framework, the dilution tunnel will be operated at a an operating temperature of approximately 70 °F (21 °C) , but no less than 59 °F (15 °C) and nominal flow rate sufficient to keep the dilute exhaust above the dew point. The tube used to transfer raw vehicle exhaust to the dilution tunnel will have a wall thickness of less than 2mm or be air gap insulated to mitigate condensation. The calibration of the critical flow venturis (CFV) used to measure/control CVS bulk stream flow will be traceable to National Institute of Standards and Technology (NIST) standards. The calibration was performed by Colorado Engineering Experiment Station, Inc (CEESI) for the light-duty dynamometer. The manufacturer, Horiba, provided calibration certification for the heavy-duty dynamometer venturi. Bulk stream flow will be verified using propane injection techniques referenced later in Table 6-1.

4.4.3 Regulated Emission Sampling Procedure

Both modal and integrated regulated emissions will be sampled and measured.

4.4.3.1 Modal Regulated Emissions

Modal, or "real-time" regulated emissions will be sampled from the dilution tunnel when testing on a dynamometer. THC, CH_4, and NO_X will be sampled through their own heated filters and heated sample lines. Filter and sample line temperatures will be maintained at 235 °F (113 °C) for the THC and CH_4 CEMS and at 140 °F (71 °C) for the NO_X CEMS. Both the CO and CO_2 sample streams will be filtered, but unheated. Sampling flow rates will be regulated by the individual CEMS.

Most light-duty dynamometer bench CEMS utilized on this project are manufactured by California Analytical Instruments (CAI): Model 600-HFID heated flame ionization detectors (FID) are used for both THC and CH_4 analyses, a model 600-HCLD heated chemical analyzer for NO/NO_X analysis, and model 601 and 602 nondispersive infrared sensors (NDIR) for CO and CO_2 analyses. The NO_2 CEM is an Aerodyne Research Cavity Attenuated Phase Shift (CAPS) NO_2 monitor. The CAPS will be operated in accordance with the manufacturer's manual, Appendix R.

The heavy-duty dynamometer CEMs were manufactured by Peus and are integrated into an AVL control system. Sample transport times from the raw exhaust transfer tube to the individual CEMS were determined during instrument installation. These transport (delay) times are utilized by the control software to time align CEMS responses. In addition to the CEMS responses, the data acquisition system also continuously records CVS flow rates along with vehicle mileage and speed in order to calculate modal mass emissions according to CFR 1065 Subpart G[8]. The proprietary control system measures background concentrations prior to the start of each test to produce background corrections for all modal data. Additional modal mass emission rate calculations will be performed utilizing an alternate background correction in which background values as measured from each of the three background CVS bags will be utilized.

The data acquisition system logs sensor data at 1 hertz. Data logged includes outputs from the CEMs, and temperature, pressure, humidity and mass flow controller sensors. On the light-duty chassis dynamometer the data acquisition system is comprised of proprietary software from Environmental Testing Corporation (ETC) and analog-to-digital hardware modules from OPTO22. The software allows calibration of each

analog-to-digital modules for converting sensor outputs to engineering units. On the heavy-duty chassis dynamometer data is acquired by proprietary software from AVL. On the small engine dynamometer, data is acquired using commercially available DAQ software.

4.4.3.2 Integrated Regulated Emissions

Samples for integrated, or "bag", regulated emissions will be collected from the CVS into standard Tedlar CVS bags. Proportional sampling for the CVS bags is achieved using sampling venturis to regulate the sample flow to the bags. CEMS utilized for the bag samples are the same CEMS used for the modal analysis described above.

4.4.4 Particulate Matter ($PM_{2.5}$) Sampling Procedure

The determination of $PM_{2.5}$ mass emission includes filter custody, handling, gravimetric weighing, and operation of $PM_{2.5}$ sampling equipment. Duplicate (two) 47-mm Teflon membrane (Pall Corp., 2.0 µm Teflo R2PJ047) filters will be collected per each of the driving cycles and their individual phases (if applicable to that cycle). A background sample will also be collected and analyzed per every test day, and a field blank will be collected and analyzed once per week. Samples will be collected isokinetically at 92.7 lpm through a 2.5-µm cut-point cyclone. Sample flow rates will be regulated using mass flow controllers. The mass flow controllers will be calibrated using a NIST-traceable BIOS Dry Cal DC-1 piston type calibration device.

4.4.5 Carbonyl Sampling Procedure

Carbonyls will be sampled through a sample line heated to 235 °F (113 °C) at 1.0 lpm and collected on dinitrophenylhydrazine (DNPH)-coated silica gel cartridges. DNPH sample cartridges will be connected to a common, heated manifold, and sampling will be switched sequentially, cycle-by-cycle, through each cartridge using computer actuated solenoid valves. Sample flow rates will be regulated using mass flow controllers. The mass flow controllers will be calibrated using a NIST-traceable BIOS Dry Cal DC-1 piston type calibration device.

4.4.6 Ethanol Sampling Procedure

Samples for ethanol analysis will be collected on two sequential impingers which are placed in an ice bath and filled with deionized water. Samples will be drawn from the same heated sample line and manifold used for carbonyl sampling. Sample stream is

switched sequentially, cycle-by-cycle, through each set of impingers using computer actuated solenoid valves. Sample flow rates will be regulated using mass flow controllers. The mass flow controllers will be calibrated using an NIST-traceable BIOS Dry Cal DC-1 piston type calibration device.

4.4.7 VOC Sampling Procedure

Samples for VOC analysis will be collected in pre-cleaned 6-liter passivated canisters. Cleaning is done in accordance with TO-15. Cleanliness is verified by the use of a field blank once per week. Sample flows will be controlled by mass flow controllers. The mass flow controllers will be calibrated using an NIST-traceable BIOS Dry Cal DC-1 piston type calibration device.

For studies in which EtO will be reported, the sample lines will be coated with Silco. Samples will be collected into individually blank checks 6L Silco/Silonite lined sampling canisters. Samples will be analyzed by GC/MS operating in the Selective Ion Mode.

4.4.8 Engine Exhaust Particle Sizer (EEPS) Sampling Procedure

Sample will be drawn into the EEPS on a continuous basis using the internal sample pump of the EEPS (Appendix P). The EEPS will measure particle counts in specific size bins. Samples will be drawn from the dilution tunnel via a quarter-inch outside diameter (OD) stainless steel probe located within 12 inches of the PM filter sampling location. The EEPS will be operated according to the manufacturer's operation manual, and particle size bins will be fixed according to the manufacturer's default settings.

4.4.9 Portable Emission Measurement System (PEMS) Sampling Procedure

Testing will be conducted over the road with gaseous regulated emissions measured using PEMS units. PEMS will comply with the instrument requirements of 40 CFR 1065 Subpart C Measurement Instruments- PEMS instruments must comply with Subpart C, however procedures to verify the response of each continuously compensated analyzer will comply with 1065.920. The EPA uses two different models of Sensors SEMTECH PEMS, the SEMTECH ECOSTAR, typically at RTP, and the SEMTECH-DS, typically at Ann Arbor unless being used to supplement the ECOSTAR to simultaneously measure emissions for more than one vehicle. Both models comply with 40 CFR 1065 and measure the same gaseous analytes (CO and CO2 by non-dispersive infrared (NDIR), NO and NO2 by non-dispersive ultraviolet, and THC by flame ionization detector).

Local routes will be selected to optimize the number of seconds in the VSP bins desired for the purposes of the specificWA. Each route will be repeated as often as possible on each test day. Unless the WA specifies an exception, each route focuses on the VSP bins in one of the three MOVES speed ranges, 0 to 25 mph, 25 to 50 mph, and over 50 mph. It is anticipated that data will be collected over each route a minimum of three times per load condition with a target of nine replicates per route and load condition.

Tests will be conducted in compliance with 40 CFR 1065 Subpart J Field Testing and Portable Emission Measurement Systems.

Core measurements will include total hydrocarbons (THC), oxides of nitrogen (NOX), nitrogen dioxide (NO2), carbon monoxide (CO), carbon dioxide (CO_2), and particulate matter (PM) on the chassis dynamometer. No PM measurements will be included in the onroad PEMS measurements. Due to the lack of methane instrumentation or oxygenate and carbonyl measurements in the PEMS units, no NMHC, or NMOG will be calculated from PEMS data.

If OTAQ provides an AVL Micro Soot Sensor (MSS), a WA may opt to include the measurement of PM mass concentrations during on road testing. The MSS operates based on the photoacoustic measurement principle. The MSS provides a minimum detection limit of 1 µg/m3. The MSS integrates automated thermophoretic loss compensation (TLC). The TLC function compensates the particle losses resulting from thermophoretic deposition at the sample point and enables an automatic calculation, display and logging of the loss corrected soot signal.

When PM measurements are taken on flow through media, the filter face temperature (FFT) shall be between 32 °C to 62 °C. The filter face velocity (FFV) will be between 5 and 100 cm/s. PM samples collected on flow through media will be analyzed in accordance with 1065.590 and 1065.595.

4.4.10 Photoacoustic Extinctiometer (PAX) Sampling Procedure

The PAX directly measures in-situ light absorption and scattering of aerosol particles, from which it derives black carbon mass concentration. A 1 liter/minute sample flow is drawn from the dilution tunnel via a quarter-inch outside diameter stainless steel probe located within 12 inches of the PM filter sampling location into the PAX using an internal vacuum pump controlled by two orifices. The PAX will be operated according to the manufacturer's operation manual (Appendix N). Two PAX instruments will be

used during the testing with the only differences in these is one have a wavelength of 870nm and the other has 532nm.

4.4.11 Micro Aethalometer Sampling Procedure

Samples will be drawn into a microAeth ® Model AE51 Aethalometer on a continuous basis using its internal. The Micro Aethalometer will measure black carbon using a filter. Samples will be drawn from the dilution tunnel via a quarter-inch outside diameter (OD) stainless steel probe located within 12 inches of the PM filter sampling location. A 3 mm spot is created on the filter strip containing insert of T60 Teflon-coated borosilicate glass fiber filter material. The Micro Aethalometer will be operated according to the manufacturer's operation manual and Appendix M.

4.4.12 Environmental Particle Counter (EPC) Model 3783 Sampling Procedure

Samples will be drawn into the water-based EPC on a continuous basis using an external pump. Samples will be drawn in the dilution tunnel via a quarter-inch outside diameter stainless steel probe located within 12 inches of the PM filter sampling location. The EPC will measure ultrafine particles down to 7 nm. The aerosol sample is pulled through a cool region saturated with water vapor and its temperature is equilibrated. The sample then goes to a growth section where wetted walls are heated to produce an elevated vapor pressure. The small cool particles grow into micron sized droplets. The droplets are passed through a laser beam and create a light pulse. Every particle pulse event is detected and counted. The particle concentration is measured by counting every single particle in the air stream. The EPC will be operated according to the manufacturer's operation manual (Appendix O).

4.5 Compositing/Splitting Samples

No splitting is expected in this project. Compositing is an option that may be taken if for the Carbotrap samples there are tests or phases of tests where the concentrations are falling consistently below the MDL.

4.6 Sample Quantities

Sample quantities for vehicle emission testing are usually expressed on a volumetric basis (volume of diluted exhaust sampled). Table 4-5 lists the approximate sample volumes collected and sample volumes required for analysis during a typical test phase.

Table 4-5. Volumetric Sample Quantities for a 300-Second Test Phase

Sample Type	Quantity Collected	Required for Analysis
Regulated gaseous emissions (modal)	50 L	25 L
Regulated gaseous emissions (bag)	100 L	75 L
Particulate Matter (gravimetric)	450 L	N/A
Particulate Matter (speciated)	450 L	N/A
Particulate Matter (EEPS)	50 L	50 L
Photoacoustic Extinctiometer (PAX)	5 L	5 L
Micro Aethalometer	750 mL	750 mL
Environmental Particle Counter (EPC)	3 L	3 L
VOCs	6 L	1 L
Carbonyls	5 L	N/A
Ethanol	15 mL (liquid)	1 µL

4.7 Collection, Transport, and Storage Containers

Table 4-6 lists the types of sample collection, transport, and storage containers utilized in this project.

Table 4-6. Sample Collection, Transport, and Storage Containers

Sample Type	Sample Collection	Sample Storage/Transport
Regulated gaseous emissions (bag)	Tedlar Bag (Plastic Films Enterprises T2-270212-400)	Tedlar Bag
Particulate Matter (gravimetric)	47 mm Teflon filter (Teflo, PallCorp R2PJ047)	Plastic Petri dish
Particulate Matter (speciated)	47 mm TissueQuartz filter (Pallflex QAT-UP/47mm diameter)	Plastic Petri dish
VOCs	Passivated canister (6 L as provided by EPA)	Passivated canister
Carbonyls	DNPH coated silica gel cartridge	DNPH coated silica gel cartridge
Ethanol	Water Impinger	Sealed vial
SVOCs	Carbotrap tube	Sealed tube

The large Tedlar and/or Kynar bags used for regulated emission samples are purchased commercially and are integrated into the CVS system. Tedlar and/or Kynar bags are checked for leaks and contamination according to CFR1065.345 and CFR1065.520(g), respectively, and are re-used on multiple tests until they fail to meet contamination and leak requirements. CVS bags failing to meet these requirements are replaced with new CVS bags.

4.8 Sample Preservation

After sample collection, and prior to analysis, collected samples should be stored according to the conditions given in Table 4-7.

Table 4-7. Sample Preservation Requirements

Sample Type	Storage condition	Method
Regulated gaseous emissions (bag)	Ambient	UV shielding at ambient laboratory temperatures
Particulate Matter	40CFR§86.112-91	Temperature and humidity-controlled weighing chamber
VOCs	Ambient	Laboratory
SVOCs	Ambient	Laboratory
Carbonyls	< 32 °F (0 °C)	Freezer
Ethanol	< 32 °F (0 °C)	Freezer
Test Fuels	Sealed, 55 ± 2 °F (12.8 ± 1.1 °C)	55-gallon drums inside temperature-controlled Fuel Storage Shed

4.9 Shipping Requirements

Test fuels will be analyzed off-site by the Office of Transportation and Air Quality. Fuel samples will be shipped via Fed Ex, in sealed, glass containers approved for shipping gasoline. The recommended container for Reid Vapor Pressure (RVP) is a 1-qt Boston round, amber glass, epoxy-coated bottle filled 70 to 80-percent full. This also provides enough capacity to do the other required tests.

It is anticipated that all remaining samples will be analyzed on site and so no other shipping is required.

Appropriate Chain of Custody (COC) documentation must accompany all samples sent off-site for analysis.

4.10 Holding Times

Maximum holding times vary by sample type. $PM_{2.5}$ filters are weighed within 56 hours of collection except for runs occurring on Fridays, in which case they are weighed first thing on Monday morning. They are held in a temperature and humidity controlled chamber. The temperature is maintained at 22±1 °C. The dew point is maintained at 9.5±1 °C. The dilute exhaust and background CVS bags are analyzed for regulated emissions within 1 hour of collection. DNPH cartridges will be kept in refrigerated storage for a maximum of 2 weeks prior to analysis for carbonyls. Ethanol vials may be

kept in refrigerated storage for a maximum of 6 days prior to analysis. Maximum hold times for canister VOC samples will be 7 days from sample collection.

Typically, $PM_{2.5}$ filters are post-weighed the day after sampling to allow for adequate equilibration in the weighing room, and DNPH cartridges are typically analyzed within 7 days of collection.

4.11 Sample Handling and Custody

Sample chain-of-custody requirements will follow standard Good Laboratory Practices[23] required for labeling, recording, and tracking all samples from collection through database archival. It will be the responsibility of the dynamometer test cell and analytical lab personnel to maintain internal logbooks and records that provide a custody record throughout sample collection, preparation, and analysis.

Identifying labels are attached to each sample collected. Label information will include the unique run number and phase(s), date/time of collection, sampler initials, analysis required, and any quality control (QC) information (e.g., blank). The sample labels permanently identify each sample collected and link each sample component throughout the analytical process.

In addition to the sample identification number, each sample container for analysis will be identified with a sample tag, if appropriate. These sample tags are retained by the laboratories as physical evidence of sample receipt and must therefore be signed by the sampling technician and analyst. The sample tag will contain an abbreviated summary of the field logbook entry for the sample.

Each emissions test is assigned a unique run number. This number is used to label and identify all samples collected during a particular test. The continuous data and bag data for regulated emissions are electronically collected and stored in a file with the run number included in the file name. The run number and phase is affixed to sample bags for oxygenate analysis, passivated canister for VOC analysis, and cartridges for carbonyl analysis. The run number and phase is then recorded electronically with the data generated by the respective analyzers.

$PM_{2.5}$ filters are stored in Petri dishes that have a unique identifier associated with the filter. This assures that the pre-weight and the post-weight apply to the same filter. When placed in use, the run number and phase is recorded alongside the Petri dish number.

All of these media tracking numbers are logged and available for inspection. Bill Preston (JACOBS) will serve as sample custodian and maintain a sample log for the ethanol and quartz filter samples. James Faircloth (EPA) will serve as sample custodian and maintain a sample log for PM gravimetric filters. An EPA NRMRL will serve as custodian for VOC and carbonyl samples. JACOBS will maintain sample logs documenting the transfer of custody for the VOC and carbonyl samples.

5. Measurement Procedures

Analytes to be measured for each sample and media type collected are listed in Table 5-1. This table includes analytes measured during sampling activities and those requiring laboratory analyses.

Table 5-1. Measured Exhaust Analytes

Sample Type	Media	Analytes
Regulated gaseous emissions	CVS Tedlar bag	CO, THC, CO_2, NO_X, NO_2, CH_4
Regulated gaseous emissions	CEMs (modal)	CO, THC, CO_2, NO_X, NO_2, CH_4
Particulate Matter	47 mm filter (Teflo, PallCorp R2PJ047)	$PM_{2.5}$ mass
Particulate Matter	47 mm filter (Pall TissueQuartz QAT-UP)	TBD
Oxygenates	Water impingers	Ethanol
VOCs	Passivated Can	Acrolein, benzene, 1,3 butadiene, ethylbenzene, toluene, o-xylene, m & p-xylenes, styrene, 2,2,4-trimethylpentane, n-hexane, naphthalene.
Carbonyls	DNPH cartridge	Formcarbonyl, acetcarbonyl
Particulate Matter	EEPS EPC	Particle size and counts
Black Carbon	microAeth®	BC mass concentration
Black Carbon	PAX (modal)	BC mass concentration Albedo

Analytical methods to be used for the accomplishment of the Statement of Work tasks are referenced in Table 5-2. The methods, standard operating procedures (SOP), or MOPs referred to in Table 5-2 are kept in or near the area in which the work is to be performed. These SOPs/MOPs may undergo revisions, or new SOPs/MOPs may be written, as new analytical equipment is received and new requirements are issued. The SOPs/MOPs supplement the instrument manufacturer's recommended practice. The WACOR will be notified of any significant changes to the SOPs/MOPs used in the course of this project.

Table 5-2. Analytical Methods

Analyte/Parameter	Analytical Method	Method Reference	Responsible Party
Regulated Emissions (THC, CO, NO_X, CO_2)	CEMS	CFR Title 40, Part 1065.	EPA
Acrolein, benzene, toluene, 1,3-butadiene, o-xylene, m & p xylene, ethylbenzene, styrene, Naphthalene, n-hexane and 2,2,4-trimethylpentane (ethylene oxide is optional)	GC/MS	ECAB 144 (Appendix D) and EPA Compendium Method TO-15 (Appendix F)	EPA JACOBS (EtO)
Formcarbonyl and acetcarbonyl	HPLC	EPA Compendium Method TO-11A (Appendix H)	EPA
Particulate Matter	Gravimetric	MOP Mass Measurements of Blank and Exposed Substrates (Appendix B)	EPA
Particulate Matter	Speciation	Chemical Analysis of Fine Particulate Matter (Appendix L)	JACOBS
Ethanol	GC	Modified CARB Method 101 (Appendices C and E)	JACOBS
Temperature	Thermocouple	Reference 24	EPA
Laboratory Weights and Mass Standards	Top Loading Balance	Reference 25	EPA
Chassis Dynamometer/CVS Sampling System	Various	40 CFR, Part 86, Part 1065.	EPA
Test Fuels – Speciated HC	GC	ASTM D 6729	OTAQ
Test Fuels	Distillation	ASTM D 86	OTAQ
Test Fuels	cloud point	ASTM D2500	OTAQ
Test Fuels	RVP	ASTM D 5191	OTAQ
Test Fuels	Hydrogen/Carbon content	ASTM D 5291	OTAQ
Test Fuels	Specific Gravity	ASTM D 1298	OTAQ
Test Fuels	Total Sulfur	ASTM D 2622	OTAQ
Test Fuels	Cetane number	ASTM D613	OTAQ
Test Fuels	biodiesel content	ASTM D7371	OTAQ

6. Quality Metrics (QA/QC Checks)

This section describes QA/QC techniques to be utilized to insure precise and accurate measurements for the project. A description of data analysis, data interpretation and data management is given later in Section 7. Reporting requirements are discussed in Section 8.

Timely calibrations, as required by SOPs and manufacturer's specifications, will be conducted for all test cell sampling systems and analytical instruments. Each piece of equipment or instrument is calibrated and maintained to assure accuracy and precision within specified limits. Calibration and maintenance procedures are detailed in the Dynamometer Test Facilities Manual of SOPs, which is available for inspection in the light-duty dynamometer area of operations. A copy of these and any other appropriate SOPs are kept on-site. The calibration of analytical instrumentation utilized in this project will be the responsibility of EPA personnel. The equipment used by JACOBS personnel to collect samples will be calibrated as required, according to manufacturer's procedures, or internal guidelines at recommended intervals. An equipment logbook will be kept on file that contains maintenance and repair reports for each piece of equipment. Calibration procedures and the results of each instrument calibration will also be kept on file on both magnetic storage media and in log books. The equipment and calibration logbooks will serve as a permanent record of maintenance/repairs and calibrations for the equipment.

In general, the QA/QC Plan provides for:

- Demonstration of initial instrument linearity and functionality with multipoint calibrations, with periodic follow-up multipoint calibrations or other vendor recommended calibrations.
- Availability of calibration standards with vendor accuracy certificates, and if possible, with direct comparison to NIST standards.
- Documentation of initial and periodic calibrations, functionality tests, and other instrument performance related activities.
- Use of SOPs/MOPs for data collection activities, which includes a test-to-test calibration or span procedure.

6.1 Calibrations and QC Checks

Procedures that will be used for the calibration of test equipment and analytical instrumentation used in the light- and heavy-duty vehicle emissions testing program are referenced in Table 6-1. Most of the procedures related to dynamometer and vehicle operation and regulated emission analysis are described in Title 40 of the CFR. Additional analytical procedures are described in method SOPs and/or MOPs on file in the test facility/laboratory.

6.2 Frequency and Acceptance Criteria for Calibrations and QC Checks

6.2.1 Frequency and Acceptance Criteria

Table 6-2 contains the expected calibration/QC check frequencies and associated acceptance criteria in terms of bias for test equipment and instrumentation utilized in this project. If the calibration and/or QC checks fall outside of the acceptance criteria, corrective action or re-calibration will be performed.

6.2.2 Measurement Quality Objectives

Suggested Measurement Quality Objectives (MQO) for critical measurements are described in Table 6-3. If at any time it is noted that deviations in measured values exceed MQOs, testing is stopped, equipment is examined, and testing is resumed after the problem has been corrected. The MQOs listed in Table 6-3 differ from the acceptance criteria found in Table 6-2 in that the MQOs encompass day-to-day variability based on daily instrument single-point spans while the acceptance criteria apply to monthly or other periodic multipoint calibrations.

For the continuous emission analyzers (THC, CO, NO_X,CO_2, NO), accuracy, precision, and completeness will be derived from the recorded instrument response to a known concentration of calibration gas, which is logged during each test. Analyzer accuracy will be determined for each test according to Section 6.2.5, using the instrument response as the C_{sample} value and using the calibration gas value as C_{std}. Analyzer precision will be determined as the coefficient of variation (CV) according to Section 6.2.4, using the mean and standard deviation for multiple (all tests) responses to the same calibration gas. Completeness will be calculated according to Section 6.2.6 as the percent of tests for which valid instrument responses to calibration gas exists.

Table 6-1. Calibration and QC Checks of Laboratory Test Equipment and Analytical Instrumentation

Analyte/Parameter	Procedure	Reference
THC/CH_4 CEMS	Response Optimization	CFR-1065.360
THC/CH_4 CEMS	Multipoint calibration	CFR-1065.307
THC CEMS	Methane Response	CFR-1065.360
THC/ CH_4 CEMS	Zero and Span Check	CFR-40 §86.140-94
CO CEMS	Interference Check	CFR-1065.350
CO CEMS	Multipoint calibration	CFR-1065.307
CO CEMS	Zero and Span Check	CFR-40 §86.140-94
NO_X CEMS	NO_X Converter Efficiency	CFR-1065,358
NO_X CEMS	Multipoint calibration	CFR-1065.307
NO_X CEMS	Zero and Span Check	CFR-40 §86.140-94
CO_2 CEMS	Multipoint calibration	CFR-1065.307
CO_2 CEMS	Zero and Span Check	CFR-40 §86.140-94
NO_2 CEMS	Multipoint calibration	CFR-1065.307
NO_2 CEMS	Zero and Span Check	CFR-40 §86.123-78(b)
Dynamometer	Coastdown	CFR-40 §86.118-78 CFR-40 §1066 Subpart D
CVS	Flow Verification (Propane Injection)	CFR-1065.341
CVS	Temperature	CFR-1065.315
CVS	Pressure	CFR-1065.315
CVS	Leak Check	CFR-1065.345
VOC	GC Response	EPA TO-15 (Appendix F)
VOC	Sample Flow Rate	CFR-1065.307
Ethanol	GC Response	ARB SOP No. MDL101
Ethanol	Sample Flow Rate	CFR-1065.307
Carbonyls	HPLC response	EPA TO-11a (Appendix H)
Carbonyls	Sample Flow Rate	CFR-1065.307
$PM_{2.5}$	Microbalance	Appendix B
$PM_{2.5}$	Sample Flow Rate	CFR-1065.307
Cold Cell	Temperature	CFR-1065.315
Fuel Storage Shed	Temperature	CFR-1065.315
Heated Sample Lines	Temperature	CFR-1065.315

Table 6-2. Frequency and Acceptance Criteria for Calibrations and QC Checks

Analyte/Parameter	Procedure	Frequency	Acceptance Criteria
DYNO THC CEMS	Methane Response	Annually*	-
DYNO THC CEMS	Response Optimizations	Annually*	-
DYNO THC CEMS	Multipoint calibration	Monthly	**
DYNO THC CEMS	Zero and Span Check	Per test	± 2 %
DYNO CO CEMS	H_20/CO_2 interference check	Annually*	< 3 ppm
DYNO CO CEMS	Multipoint calibration	Monthly	**
DYNO CO CEMS	Zero and Span Check	Per test	± 2 %
DYNO NO_X CEMS	NO_X Converter Efficiency	Monthly	> 95 %
DYNO NO_X CEMS	Multipoint calibration	Monthly	**
DYNO NO_X CEMS	Zero and Span Check	Per test	± 2 %
DYNO NO_2 CEMS	Multipoint calibration	Monthly	**
DYNO NO_2 CEMS	Zero and Span Check	Per Test	± 2 %
DYNO CO_2 CEMS	Multipoint calibration	Monthly	**
DYNO CO_2 CEMS	Zero and Span Check	Per Test	± 2 %
PEMS THC CEMS	Methane Response	Annually by mfg*	-
PEMS THC CEMS	Response Optimizations	Annually by mfg*	-
PEMS THC CEMS	Multipoint calibration	Annually by mfg*	
PEMS THC CEMS	Multipoint calibration check	Monthly	**
PEMS THC CEMS	Zero and Span Check	Per test	± 2 %
PEMS CO CEMS	H20/CO2 interference check	Annually by mfg*	< 3 ppm
PEMS CO CEMS	Multipoint calibration	Annually by mfg*	**
PEMS CO CEMS	Multipoint calibration check	Monthly	**
PEMS CO CEMS	Zero and Span Check	Per test	± 2 %
PEMS NO_X CEMS	Multipoint calibration	Annually by mfg*	-
PEMS NO_X CEMS	Multipoint calibration check	Monthly	**
PEMS NO_X CEMS	Zero and Span Check	Per test	± 2 %
PEMS NO_2 CEMS	Multipoint calibration	Monthly	**
PEMS NO_2 CEMS	Multipoint calibration check	Monthly	**
PEMS NO_2 CEMS	Zero and Span Check	Per Test	± 2 %
PEMS CO_2 CEMS	Multipoint calibration	Monthly	**
PEMS CO_2 CEMS	Multipoint calibration check	Monthly	**
PEMS CO_2 CEMS	Zero and Span Check	Per Test	± 2 %
Dynamometer	Coastdown	Daily	± 1 sec
CVS	Flow Verification	Yearly	****
CVS	Temperature	Yearly	***
CVS	Pressure	Yearly	***
CVS	Leak Check	Weekly	< 2 psi / hr
VOC	GC Response	Daily	± 10 %

Analyte/Parameter	Procedure	Frequency	Acceptance Criteria
VOC	Sample Flow Rate	Yearly	****
Ethanol	GC Response	Daily	± 10 %
Ethanol	Sample Flow Rate	Yearly	****
Carbonyls	HPLC response	Daily	± 10 %
Carbonyls	Sample Flow Rate	Yearly	****
$PM_{2.5}$	Microbalance	Monthly	± 5 µg
$PM_{2.5}$	Sample Flow Rate	Yearly	****
Cold Cell	Temperature	Yearly	***
Fuel Storage Shed	Temperature	Yearly	***
Heated Sample Lines	Temperature	Yearly	***

* Annually or at project inception, whichever comes first.
** Perform Linear Squares Fit of CEM response vs. concentration and calculate the slope (b), intercept (a), R2, and SEE of best fit line. Acceptance criteria as follows: 0.99 to 1.01; a ≤ 0.5* Full Scale Concentration; R2 ≥ 0.998; SEE ≤ 1% of Full Scale concentration
*** Perform Linear Least Squares Fit of sensor response vs reference value and calculate the slope (b), intercept (a), R2, and SEE of best fit line. Acceptance criteria as follows: 0.99 to 1.01; a ≤ 1.0* Full Scale ; R2 ≥ 0.998; SEE ≤ 1% of Full Scale
**** Perform Least Squares Fit of sensor response vs reference value and calculate the slope (b), intercept (a), R2, and SEE of best fit line. Acceptance criteria as follows: 0.98 to 1.02; a ≤ 1.0* Full Scale ; R2 ≥ 0.990; SEE ≤ 2% of Full Scale

Table 6-3. Measurement Quality Objectives (MQO)

Requirement	Frequency	Acceptance Criteria	40 CFR Reference	Notes
Sample Flow Rates (Carbonyls, Ethanol, VOC, PM)				
Multipoint Flow Verification	370 days	Pass/Fail	1065.307	Performed by Met Lab
Leak Check (all except PM)	Daily	< 0.5 % of in-use flow rate	1065.345(e)	
Leak Check (PM only)	Monthly	< 0.5 % of in-use flow rate	1065.345(c)	

Requirement	**Frequency**	**Acceptance Criteria**	**40 CFR Reference**	**Notes**
Sample proportionality to CVS flows	Every test	SEE ≤ 3.5 % of mean sample flow	1065.545	
Flow Rate (Constant Volume Sampler)				
Venturi Flow Calibration	Initial Installation	n/a	1065.340	Performed by EPA OTAQ recommended vendor.
CVS Verification (propane injection)	Monthly	Recover ± 2 % of propane injected	1065.341	
Barometric pressure, venturi inlet temperature and inlet pressure multipoint verification	Annually	Pass/fail	1065.307	Performed by Met Lab
Test Distance and Road Load Simulation				
Dynamometer speed multipoint verification	Annually	Pass/Fail	1066.220	
Dynamometer torque multipoint verification	Annually	Pass/Fail	1066.220	
Torque sensor zero	Daily	0 ± 1 lb.	n/a	Follow dynamometer manufacturer's automated procedure to adjust.

Requirement	Frequency	Acceptance Criteria	40 CFR Reference	Notes
Verify dynamometer road load and inertia simulation accuracy via vehicle-off-roll coastdown.	Daily	Expected coastdown time within ±1 sec of measured coastdown time for all 5 speed intervals.	86-118.78	
Verify dynamometer + vehicle road load and inertia simulation accuracy via vehicle-on-roll coastdown.	Daily	Expected Hp within ±15 % of measured Hp for all 5 speed intervals	n/a	Follow procedureCFR-118.78. Criteria is set by WACOR.
Verify correlation between commanded test speed trace and actual speed	Every test	$R^2 > 0.98$	n/a	Criteria set by WACOR
Criteria gaseous pollutants (CO, CO2, NOx, NO, NO_2, THC, CH4)				
Multipoint verification	Monthly	Pass/Fail	1065.307	
CVS Bag leak check	Daily	< 0.5 % of in-use flow rate	1065.345(e)	
Zero/Virtual zero	Every test		1065.530(B)(10)	
Accuracy, One-point span	Every test	± 1 % full scale	n/a	Criteria set by WACOR

Requirement	**Frequency**	**Acceptance Criteria**	**40 CFR Reference**	**Notes**
Precision, from mean and standard deviation of one-point spans	Project duration	± 1 % full scale	n/a	Criteria set by WACOR
CEM sample flow vs zero/span flow	Every sample	Difference < 2%	n/a	Criteria set by WACOR
Verification of EPA protocol gas expiration dates	Monthly	No expired gases to be used	1065.750	
PM Gravimetric				
Sampling				
Sampling Filter Face velocity	Every test	< 100 cm/sec	1065.170	
Sampling Filter Face temp	Every test	47±5 C	1065.140	
Blank Filter	Weekly	Net weight gain < background filters	n/a	Criteria set by WACOR
Microbalance				
Independent Performance Verification	Yearly		1065.390	Performed by Met Lab
Auto Zero/Span Calibration	Daily		1065.390	Automated function of microbalance

Requirement	**Frequency**	**Acceptance Criteria**	**40 CFR Reference**	**Notes**
Balance check, zero tare	Every filter	± 1 ug	n/a	Criteria set by WACOR
Balance check, reference filter	Before and after each weighing session, and after every 10th sample filter	± 10 ug	1065.390	
Precision, from reference filter weighings	Project duration	Standard Deviation < 5 ug	n/a	Criteria set by WACOR
Conditioning Environment				
Dew Point	Daily	9.5 ± 1°C	1065.190	
Temperature	Daily	22 ± 1°C	1065.190	

For the GC, High Performance Liquid Chromatograph, and PM balance, accuracy and precision will be determined from periodically challenging instruments with a known concentration or weight. The challenge will be performed at least weekly. Accuracy and precision will be calculated according to Sections 6.2.5 and 6.2.4. Completeness will be determined as the percent of samples analyzed for the body of tests performed.

Table 6.3 presents nominal MQOs. These MQOs may be modified in cooperation with the EPA WACOR based on results of on-going testing.

6.2.3 Method Detection Limits

[SEQ CHAPTER \h \r 1]The method detection limit (MDL) is defined as the minimum concentration of a substance that can be measured and reported with 95-percent

confidence that the analyte concentration is greater than zero and is determined from analysis of a sample in a given matrix containing the analyte.

The equation to determine the MDL for a given analyte is:

$$MDL = t_{(n-1,\ \alpha = 0.95)}s$$

where, $t_{(n-1,\ \alpha = 0.68)}$ represents the Students' t value appropriate for a 95-percent confidence level (2.5% one-tailed) and a standard deviation estimate with n-1 degrees of freedom. The value for *s* is typically based on seven samples.

This value is obtained from analyzing standard samples containing a target analyte concentration between the instrument detection limit (IDL) and the lowest target analyte mass expected to be observed (or blank filters for filter media). For integrated samples, this value is divided by the theoretical sample volume (e.g., for 24-hour PM sample collected on a HI 10 LPM sampler, divide by 14.4 cubic meters). The method quantification limit (MQL) is defined as three times the MDL to allow for a factor of safety over the MDL.

This statistical analysis was performed on the GCs, the CEMs, and the PM2.5 microbalance for compounds of interest and are presented in Table 6-4. In both the mass based and the concentration based measurements, miles traveled and total CVS air volume directly effect the MDL calculation, hence differences in the phase 1 and phase 2 MDLs for any particular compound. In addition, for compounds *measured* on a *mass* basis (PM, formcarbonyl, acetcarbonyl, and ethanol), sample volume has a direct impact on the calculated MDL, so these compounds will have a different Ph1/Ph2 MDL ratio than the remaining, *concentration* based measure, compounds.

The heavy-duty CEMs, carbonyls, and VOCs as well as the light-duty NOCEM analyses have not been performed prior to this test protocol. The light-duty dynamometer facility CEMS, carbonyls, and VOCs analyses have not been completed for the HD-UDDS driving cycles. These MDLs will be ascertained in accordance with the above methodology prior to executing the test matrix.

6.2.4 Precision

[SEQ CHAPTER \h \r 1]Precision is the agreement between the measurements collected by two or more identical devices or measures under similar conditions. Collection of collocated duplicate samples provides information on the variability in the

sample collection, handling, storage, and analysis. Precision is reported as a coefficient of variation (*CV*) between replicate samples or sample analyses.

[EMBED Equation.3]

where *s* = sample standard deviation and [EMBED Equation.3]= sample mean.

Precision will be evaluated for GC and high performance liquid chromatographs and determined from the equipment specifications for the regulated emissions analyzers and the microbalance used to weigh $PM_{2.5}$.

Table 6-4. Minimum Detection Limits (MDLs) for Analyte List

Analyte	Units	MHDT Lo Spd Trans	HD-UDDS
LD-Dynamometer Bench			
CO bag	g/mile	TBD	TBD
CO modal	g/mile	TBD	TBD
CO_2 bag	g/mile	0.02	TBD
CO_2 modal	g/mile	0.066	TBD
NO bag	g/mile	na	TBD
NO modal	g/mile	TBD	TBD
NO_X bag	g/mile	.02	TBD
NO_X modal	g/mile	.038	TBD
THC bag	g/mile	.017	TBD
THC modal	g/mile	0.058	TBD
CH4 bag	g/mile	.002	TBD

Analyte	Units	MHDT Lo Spd Trans	HD-UDDS
CH4 modal	g/mile	.005	TBD
PM2.5	mg/mile	TBD	TBD
Formcarbonyl	µg/mile	TBD	TBD
Acetcarbonyl	µg/mile	TBD	TBD
Acrolein	µg/mile	TBD	TBD
Benzene	µg/mile	TBD	TBD
1,3 Butadiene	µg/mile	TBD	TBD
Ethylbenzene	µg/mile	TBD	TBD
Toluene	µg/mile	TBD	TBD
m,p Xylene	µg/mile	TBD	TBD
o Xylene	µg/mile	TBD	TBD
Styrene	µg/mile	TBD	TBD
n-Hexane	µg/mile	TBD	TBD
Isooctane	µg/mile	TBD	TBD
Naphthalene	na	na	na
Ethanol	mg/mile	TBD	TBD
HD-Dynamometer Bench			
CO bag	g/mile	TBD	TBD
CO modal	g/mile	TBD	TBD

Analyte	Units	MHDT Lo Spd Trans	HD-UDDS
CO_2 bag	g/mile	TBD	TBD
CO_2 modal	g/mile	TBD	TBD
NO bag	g/mile	na	TBD
NO modal	g/mile	TBD	TBD
NO_X bag	g/mile	TBD	TBD
NO_X modal	g/mile	TBD	TBD
THC bag	g/mile	TBD	TBD
THC modal	g/mile	TBD	TBD
CH4 bag	g/mile	TBD	TBD
CH4 modal	g/mile	TBD	TBD
PM2.5	mg/mile	TBD	TBD
Formcarbonyl	µg/mile	TBD	TBD
Acetcarbonyl	µg/mile	TBD	TBD
Acrolein	µg/mile	TBD	TBD
Benzene	µg/mile	TBD	TBD
1,3 Butadiene	µg/mile	TBD	TBD
Ethylbenzene	µg/mile	TBD	TBD
Toluene	µg/mile	TBD	TBD

Analyte	Units	MHDT Lo Spd Trans	HD-UDDS
m,p Xylene	µg/mile	TBD	TBD
o Xylene	µg/mile	TBD	TBD
Styrene	µg/mile	TBD	TBD
n-Hexane	µg/mile	TBD	TBD
Isooctane	µg/mile	TBD	TBD
Naphthalene	na	na	na
Ethanol	mg/mile	TBD	TBD

6.2.5 Accuracy

[SEQ CHAPTER \h \r 1]Accuracy is the measure of the closeness of a measured value to a known or true value, and includes both random error (precision) and systematic error (bias). Bias is the distortion of the data in a consistent direction due to measurement or analytical error. Measurement and analytical bias should be estimated using materials as independent as possible from the measurement system.

Measurement accuracy will be reported as a comparison between the measured sample concentration and the concentration of a known standard:

[EMBED Equation.3]

where C_{std} and C_{sample} are the values for the standard and the sample, respectively. Measurement accuracy for instrumentation typically is determined by the validation of the instrument performance during instrument development. For continuous monitors, accuracy also is determined during instrument calibration certification.

[SEQ CHAPTER \h \r 1]There are no true reference samples for size and concentration measurements of airborne particulate PM. Therefore, accuracy for PM samples cannot be inherently determined.

Accuracy will be evaluated for GCs and high performance liquid chromatographs and determined from the equipment specifications for the regulated emissions analyzers and the microbalance used to weigh $PM_{2.5}$.

6.2.6 Completeness

[SEQ CHAPTER \h \r 1]Completeness is a measure of valid data obtained from each metric. Completeness consists of sample collection and analysis components. Completeness requirements for sample collection and analysis aspects are presented because their relative importance varies between metrics. Completeness is typically defined as follows for all chemical and physical measurements:

[EMBED Equation.3]

where V is the number of measurements judged valid, and N is the number of measurements planned.

6.2.7 Consistency

All regulated emissions (THC, CO, NO_X, and CO_2) are continuously logged electronically during the execution of the test cycle. In addition, bag samples are collected during the execution of each phase and the emissions are analyzed subsequent to the execution of the cycle. By comparing the bag data to the continuous data for consistency, one can ascertain whether there is reasonable confidence that the accuracy and precision of the analyzer have not been unduly compromised by the overall system. Typically, bag and continuous data differ by less than 10 percent. In the event, that THC varies by more than 10 percent between the bag and continuous data, testing will halt while the source of the discrepancy is investigated and corrective action, if required, is completed.

6.2.8 Assessment and Response Actions

Corrective actions are initiated as a result of internal QC checks that reveal instruments or systems operating outside the range required for acceptable data, or in the event of any system failure. For example, corrective action will be performed for the following conditions: analytical or other measurement systems producing unacceptable tolerances according to method acceptance criteria, analytical precision outside of the stated MQOs, and analytical accuracy outside acceptability range as defined by the MQOs.

A “closed loop” system is used for corrective action, including the following elements.

- Problem definition
- Assignment of responsibility for investigation of the problem
- Problem investigation
- Determination of appropriate corrective action
- Implementation of corrective action
- Verification of problem correction
- Implementation and dissemination of procedural changes, if any

To enhance the timeliness of corrective action and minimize the generation of unacceptable data, problems identified by internal QC checks will be resolved at the lowest possible management level. Out-of-control conditions (indicated by their QC data) will be corrected by using the corrective action information contained in the SOPs referenced in this QAPP. Any problem and corrective action taken will be reported to the WAL and the EPA WACOR.

Problems involving any change in scheduling, the sample work plan, or performance of analytical tasks will be handled in a manner agreed upon by the JACOBS WAL and the EPA WACOR.

6.2.9 Performance and System Audits

Performance audits typically include the submission of blind samples such as NIST Standard Reference Materials in an appropriate matrix, and comparison of their results with the certified values. Systems audits typically include examination of sampling and packaging procedures, as well as examination of records from calibration and maintenance of field analytical equipment and evaluating the training/performance of field and laboratory personnel.

External audits are not specifically required by the QA Category B status of this WA. The EPA QA Manager or his/her assignee may perform internal checks for sampling and sample analysis activities according to guidelines established by 48 CFR Part 46 - Quality Assurance FAC 97-14, November 23, 1999, and the EPA QA/R-5 March 2001, EPA Requirements for Quality Assurance Project Plans. These QC checks may include duplicate samples, matrix spikes, surrogates, and blanks for each type of sample as described in the relevant analytical methods and any QA/QC sample matrix provided independent of the quarterly audits for speciated hydrocarbons, and other compounds monitored in this project. Because EtO is currently included in the advanced notification process (ANP) for EPA, any WA that involves sampling/analysis for EtO will become a QA Category A project. Category A projects require at least one technical systems audit (TSA) during the course of the project and an audit of data quality (ADQ) at the end of the project. Details will be included in project-specific appendices to this QAPP. The EPA QA Manager will coordinate all QA Category A audits with the WACOR as needed to meet EPA ANP and QA requirements.

Data will be examined for compliance with all QC/QA requirements. Notations will be made concerning any deviations from these criteria.

Outliers Method A – Wide variations in values are unacceptable. A valid statistical method contained in ASTM Standard E 178-80 (Standard Practice for Dealing with Outlying Observations) can be used to identify data points that lie outside acceptable limits and thus would have a disproportionate effect. If a value is determined to be an outlier utilizing the ASTM E 178-80 Method, the result will be flagged and its use will be determined by the EPA WACOR.

Outliers Method B – This method should be used where fewer than 9 data points have been measured. This method involves evaluating the interquartile range (IQR) of the sample set and using this value to estimate the 95-percent confidence level. The IQR is determined by arranging the data in numerical order from the lowest to highest sample value. The median of the data set is calculated. Without considering the value of the data, the datum that lies halfway between the median and the highest datum is identified. This value is the upper quartile. The datum that lies halfway between the median and the lowest datum is the lower quartile. Where there are an even number of samples, the median and the upper and lower quartiles are determined by calculating an average. For example, if there are eight samples, the median will be the average of the 4th and 5th data, the lower quartile will be the average of the 2nd and 3rd data, and the upper quartile will be the average of the 6th and 7th data. The IQR is then calculated as the difference between the upper quartile and the lower quartile. The background value at a 95-percent confidence level is estimated as the median of the data plus two times the IQR. While outlying data should not be excluded from the determination of the IQR, it should not be used to define the background value. Outliers are defined by data that lies outside the interval defined by the median plus three times the IQR.

Appropriate notations will be made in the summary report concerning the rejection of any data as outliers.

6.3 Field Notes and Records

All calibrations, repairs and maintenance, and modifications to system instrumentation will be recorded chronologically in a single bound laboratory notebook, maintained by the operating technician. This notebook is also used to record daily testing information and other related activities. QC activities performed by the operating technician will be reviewed and summarized by a designated senior staff member, in this case the EPA Senior Technician. A QC notebook (3-ring binder) will be prepared and will consist of QC summaries prepared from information within the laboratory notebook, analyses, and certificates for reference materials. Any QC activities conducted by JACOBS will

be reported in the Monthly Technical Progress Reports available to the EPA WACOR. In addition, the laboratory notebook and QC notebook will be readily available for inspection by upper management.

7. Data Analysis, Interpretation and Management

7.1 Data Analysis

The primary data product to be reported from this study will be vehicle emission rates. In support of reported emission rates, additional analyses and test parameters will also be reported, including fuel analyses, vehicle fuel economy, test temperatures, flow rates, etc. Raw data will be reduced to pollutant emission rates using calculations found in CFR, Title 40, Part 86. Raw data may come from several sources, including the test cell operator (regulated emissions and vehicle data), the in-house chromatography laboratory (ethanol) or from independent laboratories (carbonyls, oxygenates, VOCs). Raw data files from the various sources will be integrated into a single spreadsheet file, from which all calculations and reporting will be performed.

7.2 Data Interpretation (Units of Measure)

Emission rates will be reported for each test performed, and will include emission rates each driving cycle, as well as a composite emission rate from the same cycle. The composite emission rate is a weighted average for all three test phases, and will be calculated using the phase weighting factors identical to those used for the Federal Test Procedure (FTP). Table 7-1 lists the pollutants, and other data types, to be reported along with the reporting units. For onroad testing, regulated emissions will be reported on a grams per vehicle specific power basis. Emission rates will be evaluated over four speed ranges: zero miles per hour or decelerating, greater than zero and less than or equal to 25 miles per hours, greater than 25 and less than or equal to 50 miles per hour, and over 50 miles per hour.

Table 7-1. Reported Units of Measure

Analyte/Parameter	Units
Regulated Emissions	Gm/mile
VOCs	Mg/mile
SVOCs	Mg/mile
Carbonyls	Mg/mile
$PM_{2.5}$	Mg/mile
Fuel Economy	Miles per gallon
Temperature	Fahrenheit

7.3 Data Management

After the data collection phase of this study is completed, two databases will be prepared: one containing raw data collected during the study, and one with quality assured and summarized data. The raw data will be provided in CSV format and the summarized data will be in Excel format. Both databases will contain appropriate data descriptors and dictionaries sufficient for independent review and analysis of the data.

Project measurement data are maintained in electronic formats (spreadsheet and text files) and identified with unique numbers. Measurement data from individual tests, as well as statistical summaries of the measurement data will be reviewed and reported informally on a continuing basis, and will be included in a formal project report following completion of the experimental portion of the WA.

EPA personnel will be responsible for archiving raw data, reducing analytical data and providing summaries with descriptive narratives. Records of all calibrations, system performance checks, blanks, surrogate recoveries, and any other method-required QC data will be provided, along with the raw sample data and notes of problems and corrective action taken. JACOBS personnel will reduce and compile any notes from laboratory logbooks made by the JACOBS sampling personnel.

8. Reporting Requirements

The EPA Senior Engineering Technician will conduct daily and weekly reviews of the data to ensure high quality data collection during the study. The EPA Senior Engineering Technician will supply the EPA WACOR with daily summaries of raw test data and calculated data to communicate anassessment of the data quality during the study. The EPA Senior Engineering Technician will also advise the EPA WACOR of any issues which has or may adversely impact data quality.

The EPA Senior Engineering Technician will prepare and submit a final report containing project objectives, methods and data summaries, along with discussion of results. The report will include a detailed evaluation of the quality assurance/quality control results of the study. The report will be submitted in Microsoft Word format.

Table 8-1 provides a list of deliverables and corresponding responsible personnel/ organizations.

Table 8-1. Deliverables and Responsible Parties

Deliverable	Responsible Personnel or Organization
Daily/Weekly data reviews	Richard Snow
Daily Summaries to WACOR	Richard Snow
Raw Data – Regulated Emissions, Temperatures, Misc test cell data	Richard Snow
Raw Data – Carbonyls	Ingrid George
Raw Data – $PM_{2.5}$	James Faircloth
Raw Data- VOC	Ingrid George
Raw Data - Ethanol	Bill Preston
Raw Data-Particle Counts	Thomas Long
Raw Data-BC Concentrations	Thomas Long
Raw data database and validation	Richard Snow
Summarized data database	Richard Snow/Thomas Long
Final Report	Thomas Long/Richard Snow

The EPA Senior Engineering Technician will generate reports of measurement results for all samples analyzed in accordance with QAPP. These reports will be provided within three weeks of the month in which the sampling and analyses occur in accordance with the schedule within the work plan. The reports will provide results in

both paper hardcopy, and on computer media formatted for input to Microsoft Excel or ASCII format, as directed by EPA WACOR.

9. References

1. Board on Energy and Environmental Systems, National Research Council of the National Academies, "Technologies and Approaches Reducing the Fuel Consumption of Medium- and Heavy- Duty Vehicles", 2010 (also [HYPERLINK "http://www.nap.edu/openbook.php?record_id=12845"])

2. "Standard Specification for Diesel Fuel Oil, Biodiesel Blend (B6 to B20)", ASTM D7467, 2010 (also [HYPERLINK "http://www.astm.org/Standards/D7467.htm"])

3. "Code of Federal Regulations Title 40 Protection of the Environment, Volume 19, Chapter I, Subchapter C, Part 86.1313"

4. "Code of Federal Regulations Title 40 Protection of the Environment, Chapter 1, Volume 34, Part 1065"

5. "Clean Diesel Trucks, Buses, and Fuel: Heavy-Duty Engine and Vehicle Standards and Highway Diesel Fuel Sulfur Control Requirements '2007 Heavy-Duty Highway Rule'", 2001 (also [HYPERLINK "http://www.epa.gov/otaq/highway-diesel/regs.htm"])

6. Nigel N. Clark, Mridul Gautam, "Heavy-Duty Vehicle Chassis Dynamometer Testing for Emissions Inventory, Air Quality Modeling, Source Apportionment and Air Toxics Emissions Inventory, Appendix C", Coordinating Research Council Project E-55/59 Phase 2 Final Report, 2005.

7. "Code of Federal Regulations Title 40 Protection of the Environment, Chapter 1, Volume 34, Part 1066"

8. "Code of Federal Regulations Title 40 Protection of the Environment, Chapter 1, Volume 34, Part 1065 Subpart G"

9. "Code of Federal Regulations Title 40 Protection of the Environment, , Chapter 1, Volume 34, Part 1065.145(c)"

10. "Road Load Measurement Using Onboard Anemometry and Coastdown Techniques", SAE International Surface Vehicle Recommended Practice SAEJ2263, Revised Dec,2008.

11. "Chassis Dynamometer Simulation of Road Load Using Coastdown Techniques", SAE International Surface Vehicle Recommended Practice

SAEJ2264, Issued Apr 1995.

12. "Code of Federal Regulations Title 40 Protection of the Environment, Volume 19, Chapter I, Subchapter C, Part 86.232"

13. "Code of Federal Regulations Title 40 Protection of the Environment, Volume 19, Chapter I, Subchapter C, Part 86.230-11(c)(2)"

14. "Standard Test Method for Determination of Individual Components in Spark Ignition Engine Fuels by 100 Metre Capillary High Resolution Gas Chromatography", ASTM D6729, 2009 (also [HYPERLINK "http://www.astm.org/Standards/D6729.htm"])"

15. Standard Test Method for Density, Relative Density, or API Gravity of Crude Petroleum and Liquid Petroleum Products by Hydrometer Method", ASTM D1298, 2012 (also [HYPERLINK "http://www.astm.org/Standards/D1298.htm"])

16. Standard Test Method for Distillation of Petroleum Products at Atmospheric Pressure", ASTM D86, 2011 (also [HYPERLINK "http://www.astm.org/Standards/D86.htm"])

17. "Standard Test Method for Vapor Pressure of Petroleum Products (Mini Method)", ASTM D5191, 2012 (also [HYPERLINK "http://www.astm.org/Standards/D5191.htm"])

18. "Standard Test Method for Sulfur in Petroleum Products by Wavelength Dispersive X-ray Fluorescence Spectrometry", ASTM D2622, 2010 (also [HYPERLINK "http://www.astm.org/Standards/D2622.htm"])

19. "Standard Test Methods for Instrumental Determination of Carbon, Hydrogen, and Nitrogen in Petroleum Products and Lubricants", ASTM D5291, 2010 (also [HYPERLINK "http://www.astm.org/Standards/D5291.htm"])

20. "Standard Test Method for Cloud Point of Petroleum Products", ASTM D2500, 2011 (also [HYPERLINK "http://www.astm.org/Standards/D2500.htm"])

21. "Standard Test Method for Cetane Number of Diesel Fuel Oil", ASTM D613, 2010 (also [HYPERLINK "http://www.astm.org/Standards/D613.htm"])

22. "Standard Test Method for Determination of Biodiesel (Fatty Acid Methyl Esters) Content in Diesel Fuel Oil Using Mid Infrared Spectroscopy (FTIR-ATR-PLS Method)", ASTM D7371, 2012 (also [HYPERLINK "http://www.astm.org/Standards/D7371.htm"])

23. "Code of Federal Regulations Title 40 Protection of the Environment, Part 160 Good laboratory practice standards"

24. TH-0301.0 GENERAL - Hart Dry Well.doc

25. MS-0501.1 GENERAL - Balance.docx

Appendix **[PAGE]**

Catalyst Sulfur Removal Procedure

Appendix **[PAGE]**

Method of Procedure: Mass Measurement of Blank and Exposed Substrates

Appendix **[PAGE]**

Modification to CARB Procedure for
the Analysis of Automotive Exhaust
for Methanol and Ethanol

Appendix **[PAGE]**

Standard Operating Procedure for
Determination of VOCs in Whole Air
Samples Collected in Canisters Using
the Agilent 6890/5973N GC-MSD

Appendix **[PAGE]**

California Air Resources Board
Procedure for the Analysis of
Automotive Exhaust for Methanol and
Ethanol

Appendix **[PAGE]**

Compendium Method TO-15

Appendix **[PAGE]**

JACOBS Refueling MOP

Appendix **[PAGE]**

Compendium Method TO-11A

Appendix **[PAGE]**

SAE J1151 Methane Measurement
Using Gas Chromatography

Appendix **[PAGE]**

JACOBS Protective Filter
Check/Replace MOP

Appendix **[PAGE]**

SOP Photoacoustic Extinctiometer
(PAX)

Appendix **[PAGE]**

PM Analysis QAPP

Appendix **[PAGE]**

AE-51 MicroAethalometer

Appendix **[PAGE]**

Photoacoustic Extinctiometer (PAX)
Operator Manual

Appendix **[PAGE]**

EPC™ Environmental Particle
Counter™ Monitor Operation and
Service Manual

Appendix **[PAGE]**

Model 3090 Engine Exhaust Particle SizerTM Spectrometer Operation and Service Manual

Appendix **[PAGE]**

IMACC FTIR QA

Appendix **[PAGE]**

Cavity Attenuated Phase Shift NO_2 Monitor

Message

From: Nessley, Libby [Nessley.Libby@epa.gov]
Sent: 4/11/2019 5:40:03 PM
To: Long, Thomas [Long.Thomas@epa.gov]
CC: Shores, Richard [Shores.Richard@epa.gov]
Subject: RE: QAPP
Attachments: 0030059-QP-1-5_EDIT_ Mobile Source Emissions Measurement and Characterization (20190409).docx; 0030059-QP-1-6_EDIT_Addendum 2 WA 34 Speciation of Exhaust Emissions from Trucks.docx

Hi Tom,

Since we are updating the main QAPP I went ahead and made other necessary updates. I think the addendum needs to be a bit more formal since the work is now Category A, so look over what I've done to that document and see if we can add the needed information. I'm also obligated to do a systems audit when we do the sampling/analysis and an audit of data quality when we're ready to report results, so keep me in the loop so we can schedule. If you didn't know-this Cat A advanced notification stuff is a major pain from a QA standpoint ☹

Thanks,
Libby

From: Long, Thomas
Sent: Tuesday, April 09, 2019 10:39 AM
To: Nessley, Libby <Nessley.Libby@epa.gov>
Cc: Shores, Richard <Shores.Richard@epa.gov>
Subject: QAPP

Libby,

I have modified the QAPP to include provisions to include EtO in our TO-15 analysis and added an addendum to describe our mini-study next week. Please find them attached. Changes made to the main QAPP appear in a bold red font. Thanks.

_____

Thomas Long, Mechanical Engineer
Mail Drop E343-02
Building D Room 360
109 T. W. Alexander Drive
Research Triangle Park, NC 27711
Phone: 919-541-3944

Message

From: Oshodi, Billy [Oshodi.Billy@epa.gov]
Sent: 4/9/2019 4:57:18 PM
To: Nessley, Libby [Nessley.Libby@epa.gov]
CC: Long, Thomas [Long.Thomas@epa.gov]
Subject: FW: QAPP
Attachments: 0030059-QP-1-5_Orig_ Mobile Source Emissions Measurement and Characterization (20190409).docx; 0030059-QP-1-6_Orig_Addendum 2, WA 34 Speciation of Exhaust Emissions from Trucks.docx

Libby,

The revised QAPP and addendum are logged for review. The QAID#s respectively are: G-APPCD-0030059-QP-1-5 and G-APPCD-0030059-QP-1-6.

On the QAPP front page, the old division/branch names were replaced with the current.
The NRMRL QA tracking number is added on the approval page of the QAPP.

From: Nessley, Libby
Sent: Tuesday, April 09, 2019 10:45 AM
To: Oshodi, Billy <Oshodi.Billy@epa.gov>
Subject: FW: QAPP

Hi Billy,

Please log these in for review. They will be 2 separate entries-the first file is an update to their QAPP, the second is an addendum. I will do this one. Thanks!

Libby

From: Long, Thomas
Sent: Tuesday, April 09, 2019 10:39 AM
To: Nessley, Libby <Nessley.Libby@epa.gov>
Cc: Shores, Richard <Shores.Richard@epa.gov>
Subject: QAPP

Libby,

I have modified the QAPP to include provisions to include EtO in our TO-15 analysis and added an addendum to describe our mini-study next week. Please find them attached. Changes made to the main QAPP appear in a bold red font.
Thanks.

_____
Thomas Long, Mechanical Engineer
Mail Drop E343-02
Building D Room 360
109 T. W. Alexander Drive
Research Triangle Park, NC 27711
Phone: 919-541-3944

Message

From: Craig Williams [CWilliams@css-inc.com]
Sent: 5/10/2019 11:59:03 AM
To: Bryan Tyler [bryan.tyler@enthalpy.com]; Ashley Miller [ashley.miller@enthalpy.com]
CC: Thorne Gregory [thorne.gregory@enthalpy.com]; Melanie Bethea [melanie.bethea@enthalpy.com]; Long, Thomas [Long.Thomas@epa.gov]
Subject: RE: X2 - Enthalpy POs 3049 and 3050 Submission

Hi Bryan,
Thanks for the reply. Looking forward to receiving the report.

Craig

Craig Williams
Senior Engineer
Contractor to the USEPA
CSS (Jacobs Teammate)
1910 Sedwick Road
Durham, NC 27713
Office Phone: (919) 541-0336
www.css-inc.com

From: Bryan Tyler [bryan.tyler@enthalpy.com]
Sent: Thursday, May 09, 2019 4:38 PM
To: Craig Williams; Ashley Miller
Cc: Thorne Gregory; Melanie Bethea; Long, Thomas
Subject: RE: X2 - Enthalpy POs 3049 and 3050 Submission

Hi All – sorry, the lower EO reporting limit is 100ppt NOT 100ppb.

Thank you for calling that out Craig.

Analyses should be completed this week and I will get a report to you ASAP (fingers crossed for Monday).

Please take a moment to provide customer feedback.

ENTHALPY ANALYTICAL

Bryan Tyler
Vice President
Enthalpy Analytical, LLC
800 Capitola Drive, Suite 1
Durham, NC 27713
(919) 850-4392
bryan.tyler@enthalpy.com
www.enthalpy.com

Terms and Conditions
Enthalpy Sample Acceptance Policy

SSAS Laboratory ID: L0036, L0149 (metals only)

From: Bryan Tyler <bryan.tyler@enthalpy.com>
Sent: Wednesday, May 8, 2019 2:41 PM
To: 'Craig Williams' <CWilliams@css-inc.com>; 'Ashley Miller' <ashley.miller@enthalpy.com>
Cc: 'Thorne Gregory' <thorne.gregory@enthalpy.com>; Melanie Bethea <melanie.bethea@enthalpy.com>; 'Long, Thomas' <Long.Thomas@epa.gov>
Subject: RE: X2 - Enthalpy POs 3049 and 3050 Submission

Hi Everyone,
Fingers crossed – our plan will be to run all your EO samples at the lower reporting limit (100ppb)...they TO-15 analysis gave us confidence this should be doable.

We will be running samples tomorrow.

Would you like the TO-15 and EPA Method 3C data in advance of the EO?

Please take a moment to provide customer feedback.

ENTHALPY ANALYTICAL

Bryan Tyler
Vice President
Enthalpy Analytical, LLC
800 Capitola Drive, Suite 1
Durham, NC 27713
(919) 850-4392
bryan.tyler@enthalpy.com
www.enthalpy.com

Terms and Conditions
Enthalpy Sample Acceptance Policy

SSAS Laboratory ID: L0036, L0149 (metals only)

From: Craig Williams <CWilliams@css-inc.com>
Sent: Tuesday, May 7, 2019 8:47 AM
To: Bryan Tyler <bryan.tyler@enthalpy.com>; Ashley Miller <ashley.miller@enthalpy.com>
Cc: Thorne Gregory <thorne.gregory@enthalpy.com>; Melanie Bethea <melanie.bethea@enthalpy.com>; Long, Thomas <Long.Thomas@epa.gov>
Subject: RE: X2 - Enthalpy POs 3049 and 3050 Submission

Bryan,
Thank you for keeping us updated.

Craig

Craig Williams
Senior Engineer
Contractor to the USEPA

CSS (Jacobs Teammate)
1910 Sedwick Road
Durham, NC 27713
Office Phone: (919) 541-0336
www.css-inc.com

From: Bryan Tyler [bryan.tyler@enthalpy.com]
Sent: Tuesday, May 07, 2019 5:37 AM
To: Craig Williams; Ashley Miller
Cc: Thorne Gregory; Melanie Bethea; Long, Thomas
Subject: RE: X2 - Enthalpy POs 3049 and 3050 Submission

Craig,
We have the instrument manufacturer rep onsite today for maintenance and repairs...we hope these repairs allow us to start calibrating for Ethylene oxide early Wednesday morning.

The TO-15 analysis is complete, we were able to run it at ~1ppb (originally quoted at 10ppb)...we hope the same aggressive analyses can be done for Ethylene oxide which will yield as low of results as possible.

I will have an update for you mid-morning tomorrow. Again, thank you for your patience.

Best,
Bryan

Please take a moment to provide customer feedback.

ENTHALPY
ANALYTICAL

Bryan Tyler
Vice President
Enthalpy Analytical, LLC
800 Capitola Drive, Suite 1
Durham, NC 27713
(919) 850-4392
bryan.tyler@enthalpy.com
www.enthalpy.com

Terms and Conditions
Enthalpy Sample Acceptance Policy

SSAS Laboratory ID: L0036, L0149 (metals only)

From: Craig Williams <CWilliams@css-inc.com>
Sent: Friday, May 3, 2019 11:11 AM
To: Bryan Tyler <bryan.tyler@enthalpy.com>; Ashley Miller <ashley.miller@enthalpy.com>
Cc: Thorne Gregory <thorne.gregory@enthalpy.com>; Melanie Bethea <melanie.bethea@enthalpy.com>; Long, Thomas <Long.Thomas@epa.gov>
Subject: RE: X2 - Enthalpy POs 3049 and 3050 Submission

Bryan,
Please let us know how things progress.

Craig

Craig Williams
Senior Engineer
Contractor to the USEPA
CSS (Jacobs Teammate)
1910 Sedwick Road
Durham, NC 27713
Office Phone: (919) 541-0336
www.css-inc.com

From: Bryan Tyler [bryan.tyler@enthalpy.com]
Sent: Thursday, May 02, 2019 6:12 PM
To: Craig Williams; Ashley Miller
Cc: Thorne Gregory; Melanie Bethea; Long, Thomas
Subject: RE: X2 - Enthalpy POs 3049 and 3050 Submission

Craig,
This is my fault – sorry for the delay on my response. We are currently running the TO-15 analyses over the next 2 days and the Ethylene oxide analyses will run early next week. I am going to talk with our teams in the morning to get delivery times on this data.

I apologize this report is going to be late.

Bryan

Please take a moment to provide customer feedback.

ENTHALPY ANALYTICAL

Bryan Tyler
Vice President
Enthalpy Analytical, LLC
800 Capitola Drive, Suite 1
Durham, NC 27713
(919) 850-4392
bryan.tyler@enthalpy.com
www.enthalpy.com

Terms and Conditions
Enthalpy Sample Acceptance Policy

SSAS Laboratory ID: L0036, L0149 (metals only)

From: Craig Williams <CWilliams@css-inc.com>
Sent: Thursday, May 2, 2019 12:18 PM
To: Bryan Tyler <bryan.tyler@enthalpy.com>; Ashley Miller <ashley.miller@enthalpy.com>
Cc: Thorne Gregory <thorne.gregory@enthalpy.com>; Melanie Bethea <melanie.bethea@enthalpy.com>; Long, Thomas <Long.Thomas@epa.gov>
Subject: RE: X2 - Enthalpy POs 3049 and 3050 Submission

Hi Byran,

Can you please elaborate and provide an update by COB today?

Thanks,

Craig Williams
Senior Engineer
Contractor to the USEPA
CSS (Jacobs Teammate)
1910 Sedwick Road
Durham, NC 27713
Office Phone: (919) 541-0336
www.css-inc.com

From: Bryan Tyler [bryan.tyler@enthalpy.com]
Sent: Wednesday, May 01, 2019 2:55 PM
To: Craig Williams; Ashley Miller
Cc: Thorne Gregory; Melanie Bethea; Long, Thomas
Subject: RE: X2 - Enthalpy POs 3049 and 3050 Submission

Craig,
We have had some headwinds with this project – I will update you tonight/in the morning.

Bryan

Please take a moment to provide customer feedback.

ENTHALPY ANALYTICAL

Bryan Tyler
Vice President
Enthalpy Analytical, LLC
800 Capitola Drive, Suite 1
Durham, NC 27713
(919) 850-4392
bryan.tyler@enthalpy.com
www.enthalpy.com

Terms and Conditions
Enthalpy Sample Acceptance Policy

SSAS Laboratory ID: L0036, L0149 (metals only)

From: Craig Williams <CWilliams@css-inc.com>
Sent: Wednesday, May 1, 2019 10:03 AM
To: Bryan Tyler <bryan.tyler@enthalpy.com>; Ashley Miller <ashley.miller@enthalpy.com>
Cc: Thorne Gregory <thorne.gregory@enthalpy.com>; Melanie Bethea <melanie.bethea@enthalpy.com>; Long, Thomas <Long.Thomas@epa.gov>
Subject: RE: X2 - Enthalpy POs 3049 and 3050 Submission

Hi Bryan,
Just checking if all is going OK and on schedule.

Thanks

Craig Williams
Senior Engineer
Contractor to the USEPA
CSS (Jacobs Teammate)
1910 Sedwick Road
Durham, NC 27713
Office Phone: (919) 541-0336
www.css-inc.com

From: Bryan Tyler [bryan.tyler@enthalpy.com]
Sent: Tuesday, April 23, 2019 12:46 PM
To: Craig Williams; Ashley Miller
Cc: Thorne Gregory; Melanie Bethea; Long, Thomas
Subject: RE: X2 - Enthalpy POs 3049 and 3050 Submission

Samples have been received and are logged into the lab. Sample analysis will start later (keep in mind there are 4 separate analyses required) this week into next, final reports should be to you by COB next Friday 5/3.

Thanks,
Bryan

Please take a moment to provide customer feedback.

ENTHALPY ANALYTICAL

Bryan Tyler
Vice President
Enthalpy Analytical, LLC
800 Capitola Drive, Suite 1
Durham, NC 27713
(919) 850-4392
bryan.tyler@enthalpy.com
www.enthalpy.com

Terms and Conditions
Enthalpy Sample Acceptance Policy

SSAS Laboratory ID: L0036, L0149 (metals only)

From: Craig Williams <CWilliams@css-inc.com>
Sent: Tuesday, April 23, 2019 12:43 PM
To: Ashley Miller <ashley.miller@enthalpy.com>; Bryan Tyler <bryan.tyler@enthalpy.com>
Cc: Thorne Gregory <thorne.gregory@enthalpy.com>; Melanie Bethea <melanie.bethea@enthalpy.com>; Long, Thomas <Long.Thomas@epa.gov>
Subject: RE: X2 - Enthalpy POs 3049 and 3050 Submission

Hi Bryan and Ashley,
Can you please provide an update on the TO-15, EPA Method 3C, and EtO analysis and an estimate of when you will provide the results?

Thanks,

Craig Williams
Senior Engineer
Contractor to the USEPA
CSS (Jacobs Teammate)
1910 Sedwick Road
Durham, NC 27713
Office Phone: (919) 541-0336
www.css-inc.com

From: Ashley Miller [ashley.miller@enthalpy.com]
Sent: Wednesday, April 17, 2019 3:39 PM
To: Craig Williams; Melanie Bethea; Long, Thomas
Cc: Bryan Tyler; Thorne Gregory
Subject: RE: X2 - Enthalpy POs 3049 and 3050 Submission

Craig-

That will work fine. We can hold them until the rest arrive.

Please take a moment to provide customer feedback.

ENTHALPY ANALYTICAL

Ashley Miller
Senior Project Manager
Enthalpy Analytical, LLC
800 Capitola Drive, Suite 1
Durham, NC 27713
(919) 850-4392
ashley.miller@enthalpy.com
www.enthalpy.com

Terms and Conditions
Enthalpy Sample Acceptance Policy
SSAS Laboratory ID: L0036, L0149 (metals only)

From: Craig Williams <CWilliams@css-inc.com>
Sent: Wednesday, April 17, 2019 3:33 PM
To: Ashley Miller <ashley.miller@enthalpy.com>; Melanie Bethea <melanie.bethea@enthalpy.com>; Long, Thomas <Long.Thomas@epa.gov>
Cc: Bryan Tyler <bryan.tyler@enthalpy.com>; Thorne Gregory <thorne.gregory@enthalpy.com>
Subject: RE: X2 - Enthalpy POs 3049 and 3050 Submission

Daniel may bring a couple boxes of SUMMA cans with chain of custody forms when he picks up the controller. Is this OK? We'd bring the remaining cans over on Friday.

Craig Williams
Senior Engineer
Contractor to the USEPA
CSS (Jacobs Teammate)

1910 Sedwick Road
Durham, NC 27713
Office Phone: (919) 541-0336
www.css-inc.com

From: Ashley Miller [ashley.miller@enthalpy.com]
Sent: Wednesday, April 17, 2019 3:17 PM
To: Craig Williams; Melanie Bethea; Long, Thomas
Cc: Bryan Tyler; Thorne Gregory
Subject: RE: X2 - Enthalpy POs 3049 and 3050 Submission

Hi Craig-

Yes I will be here. I will plan to see him tomorrow. Thanks!

Please take a moment to provide customer feedback.

ENTHALPY ANALYTICAL

Ashley Miller
Senior Project Manager
Enthalpy Analytical, LLC
800 Capitola Drive, Suite 1
Durham, NC 27713
(919) 850-4392
ashley.miller@enthalpy.com
www.enthalpy.com

Terms and Conditions
Enthalpy Sample Acceptance Policy
SSAS Laboratory ID: L0036, L0149 (metals only)

From: Craig Williams <CWilliams@css-inc.com>
Sent: Wednesday, April 17, 2019 3:15 PM
To: Ashley Miller <ashley.miller@enthalpy.com>; Melanie Bethea <melanie.bethea@enthalpy.com>; Long, Thomas <Long.Thomas@epa.gov>
Cc: Bryan Tyler <bryan.tyler@enthalpy.com>; Thorne Gregory <thorne.gregory@enthalpy.com>
Subject: RE: X2 - Enthalpy POs 3049 and 3050 Submission

Will you be there as the contact person?

Craig

Craig Williams
Senior Engineer
Contractor to the USEPA
CSS (Jacobs Teammate)
1910 Sedwick Road
Durham, NC 27713
Office Phone: (919) 541-0336
www.css-inc.com

From: Craig Williams
Sent: Wednesday, April 17, 2019 3:13 PM

To: Ashley Miller; Melanie Bethea; Long, Thomas
Cc: Bryan Tyler; Thorne Gregory
Subject: RE: X2 - Enthalpy POs 3049 and 3050 Submission

Ashley,
Daniel Janek from Jacobs will pick up the controller and plans to be there at 8:00.

Craig

Craig Williams
Senior Engineer
Contractor to the USEPA
CSS (Jacobs Teammate)
1910 Sedwick Road
Durham, NC 27713
Office Phone: (919) 541-0336
www.css-inc.com

From: Ashley Miller [ashley.miller@enthalpy.com]
Sent: Wednesday, April 17, 2019 2:53 PM
To: Craig Williams; Melanie Bethea; Long, Thomas
Cc: Bryan Tyler; Thorne Gregory
Subject: RE: X2 - Enthalpy POs 3049 and 3050 Submission

Craig-

Yes anytime after 8 am will work fine. Thanks!

Please take a moment to provide customer feedback.

ENTHALPY ANALYTICAL

Ashley Miller
Senior Project Manager
Enthalpy Analytical, LLC
800 Capitola Drive, Suite 1
Durham, NC 27713
(919) 850-4392
ashley.miller@enthalpy.com
www.enthalpy.com

Terms and Conditions
Enthalpy Sample Acceptance Policy
SSAS Laboratory ID: L0036, L0149 (metals only)

From: Craig Williams <CWilliams@css-inc.com>
Sent: Wednesday, April 17, 2019 2:49 PM
To: Ashley Miller <ashley.miller@enthalpy.com>; Melanie Bethea <melanie.bethea@enthalpy.com>; Long, Thomas <Long.Thomas@epa.gov>
Cc: Bryan Tyler <bryan.tyler@enthalpy.com>; Thorne Gregory <thorne.gregory@enthalpy.com>
Subject: RE: X2 - Enthalpy POs 3049 and 3050 Submission

Yes, understood. The controller will not have been blank checked. Is it OK to send someone over early tomorrow morning?

Craig Williams
Senior Engineer
Contractor to the USEPA
CSS (Jacobs Teammate)
1910 Sedwick Road
Durham, NC 27713
Office Phone: (919) 541-0336
www.css-inc.com

From: Ashley Miller [ashley.miller@enthalpy.com]
Sent: Wednesday, April 17, 2019 2:45 PM
To: Craig Williams; Melanie Bethea; Long, Thomas
Cc: Bryan Tyler; Thorne Gregory
Subject: RE: X2 - Enthalpy POs 3049 and 3050 Submission

Hi Craig-

Just to confirm, the controller will not be blank-checked via GC/MS. It has been purging for quite some time so there is no reason to think there would be contamination, but just wanted to clarify that we will not have the instrument back up and running to be able to blank check prior to pickup.

Please take a moment to provide customer feedback.

ENTHALPY
ANALYTICAL

Ashley Miller
Senior Project Manager
Enthalpy Analytical, LLC
800 Capitola Drive, Suite 1
Durham, NC 27713
(919) 850-4392
ashley.miller@enthalpy.com
www.enthalpy.com

Terms and Conditions
Enthalpy Sample Acceptance Policy
SSAS Laboratory ID: L0036, L0149 (metals only)

From: Craig Williams <CWilliams@css-inc.com>
Sent: Wednesday, April 17, 2019 12:49 PM
To: Melanie Bethea <melanie.bethea@enthalpy.com>; Ashley Miller <ashley.miller@enthalpy.com>; Long, Thomas <Long.Thomas@epa.gov>
Cc: Bryan Tyler <bryan.tyler@enthalpy.com>; Thorne Gregory <thorne.gregory@enthalpy.com>
Subject: RE: X2 - Enthalpy POs 3049 and 3050 Submission

Hi Melanie,
We can send someone over first thing tomorrow morning to pick up the controller. Is that OK? What time will it be available?

Craig Williams
Senior Engineer
Contractor to the USEPA

CSS (Jacobs Teammate)
1910 Sedwick Road
Durham, NC 27713
Office Phone: (919) 541-0336
www.css-inc.com

From: Melanie Bethea [melanie.bethea@enthalpy.com]
Sent: Wednesday, April 17, 2019 11:12 AM
To: Ashley Miller; Craig Williams; Long, Thomas
Cc: Bryan Tyler; Thorne Gregory
Subject: RE: X2 - Enthalpy POs 3049 and 3050 Submission

Good Morning,

The requested controller has been purging with nitrogen for 18+ hours. We will not be able to blank check the controller today as the instruments is still coming on line.

Please let us know how you would like to proceed.

Thank you,
Melanie

Please take a moment to provide customer feedback.

ENTHALPY ANALYTICAL

Melanie Bethea
Operations Manager
Enthalpy Analytical, LLC
800 Capitola Drive, Suite 1
Durham, NC 27713
(919) 850.4392
melanie.bethea@enthalpy.com
www.enthalpy.com

Terms and Conditions
Enthalpy Sample Acceptance Policy

SSAS Laboratory ID: L0036, L0149 (metals only)

From: Ashley Miller <ashley.miller@enthalpy.com>
Sent: Tuesday, April 16, 2019 2:37 PM
To: Craig Williams <CWilliams@css-inc.com>; Long, Thomas <Long.Thomas@epa.gov>
Cc: Bryan Tyler <bryan.tyler@enthalpy.com>; Thorne Gregory <thorne.gregory@enthalpy.com>; Melanie Bethea <melanie.bethea@enthalpy.com>
Subject: RE: X2 - Enthalpy POs 3049 and 3050 Submission

Understood. If things improve I will reach out. Thanks for your patience!

Please take a moment to provide customer feedback.

ENTHALPY ANALYTICAL

Ashley Miller
Senior Project Manager
Enthalpy Analytical, LLC
800 Capitola Drive, Suite 1
Durham, NC 27713
(919) 850-4392
ashley.miller@enthalpy.com
www.enthalpy.com

Terms and Conditions
Enthalpy Sample Acceptance Policy
SSAS Laboratory ID: L0036, L0149 (metals only)

From: Craig Williams <CWilliams@css-inc.com>
Sent: Tuesday, April 16, 2019 2:35 PM
To: Ashley Miller <ashley.miller@enthalpy.com>; Long, Thomas <Long.Thomas@epa.gov>
Cc: Bryan Tyler <bryan.tyler@enthalpy.com>; Thorne Gregory <thorne.gregory@enthalpy.com>; Melanie Bethea <melanie.bethea@enthalpy.com>
Subject: RE: X2 - Enthalpy POs 3049 and 3050 Submission

Hi Ashley,
I would like to hold off in the hopes that your instrument is back up and running tomorrow. I'll check back around 2:00 tomorrow.

I appreciate your effort.

Thanks,

Craig Williams
Senior Engineer
Contractor to the USEPA
CSS (Jacobs Teammate)
1910 Sedwick Road
Durham, NC 27713
Office Phone: (919) 541-0336
www.css-inc.com

From: Ashley Miller [ashley.miller@enthalpy.com]
Sent: Tuesday, April 16, 2019 2:15 PM
To: Craig Williams; Long, Thomas
Cc: Bryan Tyler; Thorne Gregory; Melanie Bethea
Subject: RE: X2 - Enthalpy POs 3049 and 3050 Submission

Hi Craig and Thomas-

Sorry to deliver sad news, but our instrument is down and will not be back up before tomorrow. Please let me know if you would like the additional controller, or if you would like to wait until we get the instrument back up and can blank check it. Please note, I can't guarantee we will be back up and running by any certain time tomorrow.

Sorry for the bad news. Let me know how to proceed. Thanks!

Please take a moment to provide customer feedback.

ENTHALPY ANALYTICAL

Ashley Miller
Senior Project Manager
Enthalpy Analytical, LLC
800 Capitola Drive, Suite 1
Durham, NC 27713
(919) 850-4392
ashley.miller@enthalpy.com
www.enthalpy.com

Terms and Conditions
Enthalpy Sample Acceptance Policy
SSAS Laboratory ID: L0036, L0149 (metals only)

From: Craig Williams <CWilliams@css-inc.com>
Sent: Tuesday, April 16, 2019 1:03 PM
To: Long, Thomas <Long.Thomas@epa.gov>
Cc: Ashley Miller <ashley.miller@enthalpy.com>; Bryan Tyler <bryan.tyler@enthalpy.com>; Thorne Gregory <thorne.gregory@enthalpy.com>; Melanie Bethea <melanie.bethea@enthalpy.com>
Subject: Re: X2 - Enthalpy POs 3049 and 3050 Submission

Hi Ashley,
Thanks. It's important for us that it's blank checked. I can pick it up in the morning if you're able to have it ready and blank checked. Please let me know.

Thanks

Sent from my iPhone

On Apr 16, 2019, at 12:56 PM, Long, Thomas <Long.Thomas@epa.gov> wrote:

If we sent someone over at 8 am tomorrow to pick it up could we get one that had been blank checked?

_____
Thomas Long, Mechanical Engineer
Mail Drop E343-02
Building D Room 360
109 T. W. Alexander Drive
Research Triangle Park, NC 27711
Phone: 919-541-3944

From: Ashley Miller <ashley.miller@enthalpy.com>
Sent: Tuesday, April 16, 2019 12:51 PM
To: Craig Williams <CWilliams@css-inc.com>; Bryan Tyler <bryan.tyler@enthalpy.com>; Long, Thomas <Long.Thomas@epa.gov>
Cc: Thorne Gregory <thorne.gregory@enthalpy.com>; Melanie Bethea <melanie.bethea@enthalpy.com>
Subject: RE: X2 - Enthalpy POs 3049 and 3050 Submission

Hi Craig-

We can build another flow controller, but we will not be able to blank check it. If you guys are ok with using a flow controller that has not been blank-checked then I can have it over to you with the rest of the equipment this afternoon. It is very unlikely that this would result in any sort of contamination, and we are confident that the flow controller would be usable without concern as-is.

Let me know if this is acceptable, and I'll have it to you today. Thanks!

Please take a moment to provide customer feedback.

<image001.png>

Ashley Miller
Senior Project Manager
Enthalpy Analytical, LLC
800 Capitola Drive, Suite 1
Durham, NC 27713
(919) 850-4392
ashley.miller@enthalpy.com
www.enthalpy.com

Terms and Conditions
Enthalpy Sample Acceptance Policy
SSAS Laboratory ID: L0036, L0149 (metals only)

From: Craig Williams <CWilliams@css-inc.com>
Sent: Tuesday, April 16, 2019 12:28 PM
To: Ashley Miller <ashley.miller@enthalpy.com>; Bryan Tyler <bryan.tyler@enthalpy.com>; Long, Thomas <Long.Thomas@epa.gov>
Cc: Thorne Gregory <thorne.gregory@enthalpy.com>; Melanie Bethea <melanie.bethea@enthalpy.com>
Subject: RE: X2 - Enthalpy POs 3049 and 3050 Submission

Hi Ashley,
Thank you very much. Please let me know if it will be coming with the cans that Enthalpy's delivering today.

Craig

Craig Williams
Senior Engineer
Contractor to the USEPA
CSS (Jacobs Teammate)
1910 Sedwick Road
Durham, NC 27713
Office Phone: (919) 541-0336
www.css-inc.com

From: Ashley Miller [ashley.miller@enthalpy.com]
Sent: Tuesday, April 16, 2019 12:00 PM
To: Craig Williams; Bryan Tyler; Long, Thomas
Cc: Thorne Gregory; Melanie Bethea
Subject: RE: X2 - Enthalpy POs 3049 and 3050 Submission

Craig-

We are checking to see if we have another 200cc/min flow controller. I will be in touch soon.

Please take a moment to provide customer feedback.

<image001.png>

Ashley Miller
Senior Project Manager
Enthalpy Analytical, LLC
800 Capitola Drive, Suite 1
Durham, NC 27713
(919) 850-4392
ashley.miller@enthalpy.com
www.enthalpy.com

Terms and Conditions
Enthalpy Sample Acceptance Policy
SSAS Laboratory ID: L0036, L0149 (metals only)

From: Craig Williams <CWilliams@css-inc.com>
Sent: Tuesday, April 16, 2019 11:49 AM
To: Bryan Tyler <bryan.tyler@enthalpy.com>; Long, Thomas <Long.Thomas@epa.gov>
Cc: Thorne Gregory <thorne.gregory@enthalpy.com>; Melanie Bethea <melanie.bethea@enthalpy.com>; Ashley Miller <ashley.miller@enthalpy.com>
Subject: RE: X2 - Enthalpy POs 3049 and 3050 Submission

Bryan,
Tom says that he's short an orifice for the spiked can. Please send a 1377 sec/180 flow for the spiked can today.

Craig Williams
Senior Engineer
Contractor to the USEPA
CSS (Jacobs Teammate)
1910 Sedwick Road
Durham, NC 27713
Office Phone: (919) 541-0336
www.css-inc.com

From: Craig Williams
Sent: Tuesday, April 16, 2019 8:44 AM
To: Bryan Tyler; Long, Thomas
Cc: Thorne Gregory; Melanie Bethea; Ashley Miller
Subject: RE: X2 - Enthalpy POs 3049 and 3050 Submission

Hi Bryan,
I talked to Tom this morning and the answer from Jacobs and EPA is yes, running the samples after all have been received by Enthalpy is OK.

Thanks.

Craig Williams
Senior Engineer
Contractor to the USEPA
CSS (Jacobs Teammate)

1910 Sedwick Road
Durham, NC 27713
Office Phone: (919) 541-0336
www.css-inc.com

From: Bryan Tyler [bryan.tyler@enthalpy.com]
Sent: Monday, April 15, 2019 4:04 PM
To: Craig Williams; Long, Thomas
Cc: Thorne Gregory; Melanie Bethea; Ashley Miller
Subject: RE: X2 - Enthalpy POs 3049 and 3050 Submission

Hi All,
We will not run the samples until they are all received...with this schedule sample analysis will commence on 4/22.

Does this work for Jacobs/EPA?

Please take a moment to provide customer feedback.

<image001.png>

Bryan Tyler
Vice President
Enthalpy Analytical, LLC
800 Capitola Drive, Suite 1
Durham, NC 27713
(919) 850-4392
bryan.tyler@enthalpy.com
www.enthalpy.com

Terms and Conditions
Enthalpy Sample Acceptance Policy

SSAS Laboratory ID: L0036, L0149 (metals only)

From: Craig Williams <CWilliams@css-inc.com>
Sent: Monday, April 15, 2019 3:59 PM
To: Long, Thomas <Long.Thomas@epa.gov>; Bryan Tyler <bryan.tyler@enthalpy.com>
Cc: Thorne Gregory <thorne.gregory@enthalpy.com>; Melanie Bethea <melanie.bethea@enthalpy.com>; Ashley Miller <ashley.miller@enthalpy.com>
Subject: RE: X2 - Enthalpy POs 3049 and 3050 Submission

Hi Tom,
Enthalpy is only 5 minutes away. I think Jacobs can arrange for someone to drive the samples over tomorrow. Are you proposing taking them all at the end of the day or more frequent?

Craig Williams
Senior Engineer
Contractor to the USEPA
CSS (Jacobs Teammate)
1910 Sedwick Road
Durham, NC 27713
Office Phone: (919) 541-0336
www.css-inc.com

From: Long, Thomas [Long.Thomas@epa.gov]
Sent: Monday, April 15, 2019 3:14 PM
To: Craig Williams; Bryan Tyler
Cc: Thorne Gregory; Melanie Bethea; Ashley Miller
Subject: RE: X2 - Enthalpy POs 3049 and 3050 Submission

When we do cans in-house we generally try to run them within two hours or at least the same day as acrolein concentrations change pretty rapidly. The same day would be my preference.

_____
Thomas Long, Mechanical Engineer
Mail Drop E343-02
Building D Room 360
109 T. W. Alexander Drive
Research Triangle Park, NC 27711
Phone: 919-541-3944

From: Craig Williams <CWilliams@css-inc.com>
Sent: Monday, April 15, 2019 3:06 PM
To: Bryan Tyler <bryan.tyler@enthalpy.com>
Cc: Thorne Gregory <thorne.gregory@enthalpy.com>; Melanie Bethea <melanie.bethea@enthalpy.com>; Ashley Miller <ashley.miller@enthalpy.com>; Long, Thomas <Long.Thomas@epa.gov>
Subject: RE: X2 - Enthalpy POs 3049 and 3050 Submission

Hi Bryan,
What is the maximum hold time for the cans after sampling before analysis? Can we return all cans at the same time on Friday?

Tom,
Would this be acceptable?

If this is acceptable Jacobs can deliver the cans to Enthalpy.

Thanks

Craig Williams
Senior Engineer
Contractor to the USEPA
CSS (Jacobs Teammate)
1910 Sedwick Road
Durham, NC 27713
Office Phone: (919) 541-0336
www.css-inc.com

From: Bryan Tyler [bryan.tyler@enthalpy.com]
Sent: Friday, April 12, 2019 3:56 PM
To: Craig Williams
Cc: Thorne Gregory; Melanie Bethea; Ashley Miller; Long, Thomas
Subject: FW: X2 - Enthalpy POs 3049 and 3050 Submission

Hi Craig,
The below supplies will be ready for 2pm delivery on Monday.
- 8 x 6L Silco canisters individually blank checked
- 3 x Soil Gas Samplers @ ~200 cc/min
- 1 x Soil Gas Samplers @ ~650 cc/min

The below supplies will be ready for 2pm delivery on Tuesday.
- 8 x 6L Silco canisters individually blank checked

Durations from Tom Long:
- 1 can – 505 seconds (use the 650 cc/min controller)
- 1 can – 1377 seconds (use the 200 cc/min controller)
- 2 cans – 505 (ambient) (use the 650 cc/min controller)

Please take a moment to provide customer feedback.

<image001.png>

Bryan Tyler
Vice President
Enthalpy Analytical, LLC
800 Capitola Drive, Suite 1
Durham, NC 27713
(919) 850-4392
bryan.tyler@enthalpy.com
www.enthalpy.com

Terms and Conditions
Enthalpy Sample Acceptance Policy

SSAS Laboratory ID: L0036, L0149 (metals only)

From: Whicker, Crystal <Crystal.whicker@jacobs.com>
Sent: Thursday, April 11, 2019 3:13 PM
To: Bryan Tyler <bryan.tyler@enthalpy.com>
Cc: Williams, Craig <CWilliams@css-inc.com>
Subject: X2 - Enthalpy POs 3049 and 3050 Submission

Hello Bryan,

Find attached Jacobs Technology purchase orders EPATP0000003049 and EPATP0000003050.
Please confirm receipt via my email – crystal.whicker@jacobs.com.

Thank you,
Crystal Whicker
Procurement Administrator
Jacobs Technology

NOTICE - This communication may contain confidential and privileged information that is for the sole use of the intended recipient. Any viewing, copying or distribution of, or reliance on this message by unintended recipients is strictly prohibited. If you have received this message in error, please notify us immediately by replying to the message and deleting it from your computer.

CONFIDENTIALITY NOTICE: The contents of this email message and any attachments are intended solely for the addressee(s)

and may contain confidential, proprietary and/or privileged information and may be legally protected from disclosure. If you are not the intended recipient of this message or their agent, or if this message has been addressed to you in error, please immediately alert the sender by reply email and then delete this message and any attachments and the reply from your system. If you are not the intended recipient, you are hereby notified that any disclosure, use, dissemination, copying, or storage of this message or its attachments is strictly prohibited.

NOTICE - This communication may contain confidential and privileged information that is for the sole use of the intended recipient. Any viewing, copying or distribution of, or reliance on this message by unintended recipients is strictly prohibited. If you have received this message in error, please notify us immediately by replying to the message and deleting it from your computer.

CONFIDENTIALITY NOTICE: The contents of this email message and any attachments are intended solely for the addressee(s) and may contain confidential, proprietary and/or privileged information and may be legally protected from disclosure. If you are not the intended recipient of this message or their agent, or if this message has been addressed to you in error, please immediately alert the sender by reply email and then delete this message and any attachments and the reply from your system. If you are not the intended recipient, you are hereby notified that any disclosure, use, dissemination, copying, or storage of this message or its attachments is strictly prohibited.

CONFIDENTIALITY NOTICE: The contents of this email message and any attachments are intended solely for the addressee(s) and may contain confidential, proprietary and/or privileged information and may be legally protected from disclosure. If you are not the intended recipient of this message or their agent, or if this message has been addressed to you in error, please immediately alert the sender by reply email and then delete this message and any attachments and the reply from your system. If you are not the intended recipient, you are hereby notified that any disclosure, use, dissemination, copying, or storage of this message or its attachments is strictly prohibited.

CONFIDENTIALITY NOTICE: The contents of this email message and any attachments are intended solely for the addressee(s) and may contain confidential, proprietary and/or privileged information and may be legally protected from disclosure. If you are not the intended recipient of this message or their agent, or if this message has been addressed to you in error, please immediately alert the sender by reply email and then delete this message and any attachments and the reply from your system. If you are not the intended recipient, you are hereby notified that any disclosure, use, dissemination, copying, or storage of this message or its attachments is strictly prohibited.

CONFIDENTIALITY NOTICE: The contents of this email message and any attachments are intended solely for the addressee(s) and may contain confidential, proprietary and/or privileged information and may be legally protected from disclosure. If you are not the intended recipient of this message or their agent, or if this message has been addressed to you in error, please immediately alert the sender by reply email and then delete this message and any attachments and the reply from your system. If you are not the intended recipient, you are hereby notified that any disclosure, use, dissemination, copying, or storage of this message or its attachments is strictly prohibited.

CONFIDENTIALITY NOTICE: The contents of this email message and any attachments are intended solely for the addressee(s) and may contain confidential, proprietary and/or privileged information and may be legally protected from disclosure. If you are not the intended recipient of this message or their agent, or if this message has been addressed to you in error, please immediately alert the sender by reply email and then delete this message and any attachments and the reply from your system. If you are not the intended recipient, you are hereby notified that any disclosure, use, dissemination, copying, or storage of this message or its attachments is strictly prohibited.

CONFIDENTIALITY NOTICE: The contents of this email message and any attachments are intended solely for the addressee(s) and may contain confidential, proprietary and/or privileged information and may be legally protected from disclosure. If you are not the intended recipient of this message or their agent, or if this message has been addressed to you in error, please immediately alert the sender by reply email and then delete this message and any attachments and the reply from your system. If you are not the intended recipient, you are hereby notified that any disclosure, use, dissemination, copying, or storage of this message or its attachments is strictly prohibited.

CONFIDENTIALITY NOTICE: The contents of this email message and any attachments are intended solely for the addressee(s) and may contain confidential, proprietary and/or privileged information and may be legally protected from disclosure. If you are not the intended recipient of this message or their agent, or if this message has been addressed to you in error, please immediately alert the sender by reply email and then delete this message and any attachments and the reply from your system. If you are not the intended recipient, you are hereby notified that any disclosure, use, dissemination, copying, or storage of this message or its attachments is strictly prohibited.

CONFIDENTIALITY NOTICE: The contents of this email message and any attachments are intended solely for the addressee(s) and may contain confidential, proprietary and/or privileged information and may be legally protected from disclosure. If you are not the intended recipient of this message or their agent, or if this message has been addressed to you in error, please immediately alert the sender by reply email and then delete this message and any attachments and the reply from your system. If you are not the intended recipient, you are hereby notified that any disclosure, use, dissemination, copying, or storage of this message or its attachments is strictly prohibited.

CONFIDENTIALITY NOTICE: The contents of this email message and any attachments are intended solely for the addressee(s) and may contain confidential, proprietary and/or privileged information and may be legally protected from disclosure. If you are not the intended recipient of this message or their agent, or if this message has been addressed to you in error, please immediately alert the sender by reply email and then delete this message and any attachments and the reply from your system. If you are not the intended recipient, you are hereby notified that any disclosure, use, dissemination, copying, or storage of this message or its attachments is strictly prohibited.

CONFIDENTIALITY NOTICE: The contents of this email message and any attachments are intended solely for the addressee(s) and may contain confidential, proprietary and/or privileged information and may be legally protected from disclosure. If you are not the intended recipient of this message or their agent, or if this message has been addressed to you in error, please immediately alert the sender by reply email and then delete this message and any attachments and the reply from your system. If you are not the intended recipient, you are hereby notified that any disclosure, use, dissemination, copying, or storage of this message or its attachments is strictly prohibited.

CONFIDENTIALITY NOTICE: The contents of this email message and any attachments are intended solely for the addressee(s) and may contain confidential, proprietary and/or privileged information and may be legally protected from disclosure. If you are not the intended recipient of this message or their agent, or if this message has been addressed to you in error, please immediately alert the sender by reply email and then delete this message and any attachments and the reply from your system. If you are not the intended recipient, you are hereby notified that any disclosure, use, dissemination, copying, or storage of this message or its attachments is strictly prohibited.

CONFIDENTIALITY NOTICE: The contents of this email message and any attachments are intended solely for the addressee(s) and may contain confidential, proprietary and/or privileged information and may be legally protected from disclosure. If you are not the intended recipient of this message or their agent, or if this message has been addressed to you in error, please immediately alert the sender by reply email and then delete this message and any attachments and the reply from your system. If you are not the intended recipient, you are hereby notified that any disclosure, use, dissemination, copying, or storage of this message or its attachments is strictly prohibited.

CONFIDENTIALITY NOTICE: The contents of this email message and any attachments are intended solely for the addressee(s) and may contain confidential, proprietary and/or privileged information and may be legally protected from disclosure. If you are not the intended recipient of this message or their agent, or if this message has been addressed to you in error, please immediately alert the sender by reply email and then delete this message and any attachments and the reply from your system. If you are not the intended recipient, you are hereby notified that any disclosure, use, dissemination, copying, or storage of this message or its attachments is strictly prohibited.

CONFIDENTIALITY NOTICE: The contents of this email message and any attachments are intended solely for the addressee(s) and may contain confidential, proprietary and/or privileged information and may be legally protected from disclosure. If you are not the intended recipient of this message or their agent, or if this message has been addressed to you in error, please immediately alert the sender by reply email and then delete this message and any attachments and the reply from your system. If you are not the intended recipient, you are hereby notified that any disclosure, use, dissemination, copying, or storage of this message or its attachments is strictly prohibited.

CONFIDENTIALITY NOTICE: The contents of this email message and any attachments are intended solely for the addressee(s) and may contain confidential, proprietary and/or privileged information and may be legally protected from disclosure. If you are not the intended recipient of this message or their agent, or if this message has been addressed to you in error, please

immediately alert the sender by reply email and then delete this message and any attachments and the reply from your system. If you are not the intended recipient, you are hereby notified that any disclosure, use, dissemination, copying, or storage of this message or its attachments is strictly prohibited.

CONFIDENTIALITY NOTICE: The contents of this email message and any attachments are intended solely for the addressee(s) and may contain confidential, proprietary and/or privileged information and may be legally protected from disclosure. If you are not the intended recipient of this message or their agent, or if this message has been addressed to you in error, please immediately alert the sender by reply email and then delete this message and any attachments and the reply from your system. If you are not the intended recipient, you are hereby notified that any disclosure, use, dissemination, copying, or storage of this message or its attachments is strictly prohibited.

Message

From: Craig Williams [CWilliams@css-inc.com]
Sent: 5/7/2019 12:46:41 PM
To: Bryan Tyler [bryan.tyler@enthalpy.com]; Ashley Miller [ashley.miller@enthalpy.com]
CC: Thorne Gregory [thorne.gregory@enthalpy.com]; Melanie Bethea [melanie.bethea@enthalpy.com]; Long, Thomas [Long.Thomas@epa.gov]
Subject: RE: X2 - Enthalpy POs 3049 and 3050 Submission

Bryan,
Thank you for keeping us updated.

Craig

Craig Williams
Senior Engineer
Contractor to the USEPA
CSS (Jacobs Teammate)
1910 Sedwick Road
Durham, NC 27713
Office Phone: (919) 541-0336
www.css-inc.com

From: Bryan Tyler [bryan.tyler@enthalpy.com]
Sent: Tuesday, May 07, 2019 5:37 AM
To: Craig Williams; Ashley Miller
Cc: Thorne Gregory; Melanie Bethea; Long, Thomas
Subject: RE: X2 - Enthalpy POs 3049 and 3050 Submission

Craig,
We have the instrument manufacturer rep onsite today for maintenance and repairs...we hope these repairs allow us to start calibrating for Ethylene oxide early Wednesday morning.

The TO-15 analysis is complete, we were able to run it at ~1ppb (originally quoted at 10ppb)...we hope the same aggressive analyses can be done for Ethylene oxide which will yield as low of results as possible.

I will have an update for you mid-morning tomorrow. Again, thank you for your patience.

Best,
Bryan

Please take a moment to provide customer feedback.

ENTHALPY
ANALYTICAL

Bryan Tyler
Vice President
Enthalpy Analytical, LLC
800 Capitola Drive, Suite 1
Durham, NC 27713
(919) 850-4392
bryan.tyler@enthalpy.com
www.enthalpy.com

Terms and Conditions
Enthalpy Sample Acceptance Policy

SSAS Laboratory ID: L0036, L0149 (metals only)

From: Craig Williams <CWilliams@css-inc.com>
Sent: Friday, May 3, 2019 11:11 AM
To: Bryan Tyler <bryan.tyler@enthalpy.com>; Ashley Miller <ashley.miller@enthalpy.com>
Cc: Thorne Gregory <thorne.gregory@enthalpy.com>; Melanie Bethea <melanie.bethea@enthalpy.com>; Long, Thomas <Long.Thomas@epa.gov>
Subject: RE: X2 - Enthalpy POs 3049 and 3050 Submission

Bryan,
Please let us know how things progress.

Craig

Craig Williams
Senior Engineer
Contractor to the USEPA
CSS (Jacobs Teammate)
1910 Sedwick Road
Durham, NC 27713
Office Phone: (919) 541-0336
www.css-inc.com

From: Bryan Tyler [bryan.tyler@enthalpy.com]
Sent: Thursday, May 02, 2019 6:12 PM
To: Craig Williams; Ashley Miller
Cc: Thorne Gregory; Melanie Bethea; Long, Thomas
Subject: RE: X2 - Enthalpy POs 3049 and 3050 Submission

Craig,
This is my fault – sorry for the delay on my response. We are currently running the TO-15 analyses over the next 2 days and the Ethylene oxide analyses will run early next week. I am going to talk with our teams in the morning to get delivery times on this data.

I apologize this report is going to be late.

Bryan

Please take a moment to provide customer feedback.

ENTHALPY ANALYTICAL

Bryan Tyler
Vice President
Enthalpy Analytical, LLC
800 Capitola Drive, Suite 1
Durham, NC 27713
(919) 850-4392

bryan.tyler@enthalpy.com
www.enthalpy.com

Terms and Conditions
Enthalpy Sample Acceptance Policy

SSAS Laboratory ID: L0036, L0149 (metals only)

From: Craig Williams <CWilliams@css-inc.com>
Sent: Thursday, May 2, 2019 12:18 PM
To: Bryan Tyler <bryan.tyler@enthalpy.com>; Ashley Miller <ashley.miller@enthalpy.com>
Cc: Thorne Gregory <thorne.gregory@enthalpy.com>; Melanie Bethea <melanie.bethea@enthalpy.com>; Long, Thomas <Long.Thomas@epa.gov>
Subject: RE: X2 - Enthalpy POs 3049 and 3050 Submission

Hi Byran,
Can you please elaborate and provide an update by COB today?

Thanks,

Craig Williams
Senior Engineer
Contractor to the USEPA
CSS (Jacobs Teammate)
1910 Sedwick Road
Durham, NC 27713
Office Phone: (919) 541-0336
www.css-inc.com

From: Bryan Tyler [bryan.tyler@enthalpy.com]
Sent: Wednesday, May 01, 2019 2:55 PM
To: Craig Williams; Ashley Miller
Cc: Thorne Gregory; Melanie Bethea; Long, Thomas
Subject: RE: X2 - Enthalpy POs 3049 and 3050 Submission

Craig,
We have had some headwinds with this project – I will update you tonight/in the morning.

Bryan

Please take a moment to provide customer feedback.

ENTHALPY ANALYTICAL

Bryan Tyler
Vice President
Enthalpy Analytical, LLC
800 Capitola Drive, Suite 1
Durham, NC 27713
(919) 850-4392
bryan.tyler@enthalpy.com

www.enthalpy.com

Terms and Conditions
Enthalpy Sample Acceptance Policy

SSAS Laboratory ID: L0036, L0149 (metals only)

From: Craig Williams <CWilliams@css-inc.com>
Sent: Wednesday, May 1, 2019 10:03 AM
To: Bryan Tyler <bryan.tyler@enthalpy.com>; Ashley Miller <ashley.miller@enthalpy.com>
Cc: Thorne Gregory <thorne.gregory@enthalpy.com>; Melanie Bethea <melanie.bethea@enthalpy.com>; Long, Thomas <Long.Thomas@epa.gov>
Subject: RE: X2 - Enthalpy POs 3049 and 3050 Submission

Hi Bryan,
Just checking if all is going OK and on schedule.

Thanks

Craig Williams
Senior Engineer
Contractor to the USEPA
CSS (Jacobs Teammate)
1910 Sedwick Road
Durham, NC 27713
Office Phone: (919) 541-0336
www.css-inc.com

From: Bryan Tyler [bryan.tyler@enthalpy.com]
Sent: Tuesday, April 23, 2019 12:46 PM
To: Craig Williams; Ashley Miller
Cc: Thorne Gregory; Melanie Bethea; Long, Thomas
Subject: RE: X2 - Enthalpy POs 3049 and 3050 Submission

Samples have been received and are logged into the lab. Sample analysis will start later (keep in mind there are 4 separate analyses required) this week into next, final reports should be to you by COB next Friday 5/3.

Thanks,
Bryan

Please take a moment to provide customer feedback.

ENTHALPY
ANALYTICAL

Bryan Tyler
Vice President
Enthalpy Analytical, LLC
800 Capitola Drive, Suite 1
Durham, NC 27713
(919) 850-4392
bryan.tyler@enthalpy.com
www.enthalpy.com

Terms and Conditions
Enthalpy Sample Acceptance Policy

SSAS Laboratory ID: L0036, L0149 (metals only)

From: Craig Williams <CWilliams@css-inc.com>
Sent: Tuesday, April 23, 2019 12:43 PM
To: Ashley Miller <ashley.miller@enthalpy.com>; Bryan Tyler <bryan.tyler@enthalpy.com>
Cc: Thorne Gregory <thorne.gregory@enthalpy.com>; Melanie Bethea <melanie.bethea@enthalpy.com>; Long, Thomas <Long.Thomas@epa.gov>
Subject: RE: X2 - Enthalpy POs 3049 and 3050 Submission

Hi Bryan and Ashley,
Can you please provide an update on the TO-15, EPA Method 3C, and EtO analysis and an estimate of when you will provide the results?

Thanks,

Craig Williams
Senior Engineer
Contractor to the USEPA
CSS (Jacobs Teammate)
1910 Sedwick Road
Durham, NC 27713
Office Phone: (919) 541-0336
www.css-inc.com

From: Ashley Miller [ashley.miller@enthalpy.com]
Sent: Wednesday, April 17, 2019 3:39 PM
To: Craig Williams; Melanie Bethea; Long, Thomas
Cc: Bryan Tyler; Thorne Gregory
Subject: RE: X2 - Enthalpy POs 3049 and 3050 Submission

Craig-

That will work fine. We can hold them until the rest arrive.

Please take a moment to provide customer feedback.

ENTHALPY
ANALYTICAL

Ashley Miller
Senior Project Manager
Enthalpy Analytical, LLC
800 Capitola Drive, Suite 1
Durham, NC 27713
(919) 850-4392
ashley.miller@enthalpy.com
www.enthalpy.com

Terms and Conditions

Enthalpy Sample Acceptance Policy
SSAS Laboratory ID: L0036, L0149 (metals only)

From: Craig Williams <CWilliams@css-inc.com>
Sent: Wednesday, April 17, 2019 3:33 PM
To: Ashley Miller <ashley.miller@enthalpy.com>; Melanie Bethea <melanie.bethea@enthalpy.com>; Long, Thomas <Long.Thomas@epa.gov>
Cc: Bryan Tyler <bryan.tyler@enthalpy.com>; Thorne Gregory <thorne.gregory@enthalpy.com>
Subject: RE: X2 - Enthalpy POs 3049 and 3050 Submission

Daniel may bring a couple boxes of SUMMA cans with chain of custody forms when he picks up the controller. Is this OK? We'd bring the remaining cans over on Friday.

Craig Williams
Senior Engineer
Contractor to the USEPA
CSS (Jacobs Teammate)
1910 Sedwick Road
Durham, NC 27713
Office Phone: (919) 541-0336
www.css-inc.com

From: Ashley Miller [ashley.miller@enthalpy.com]
Sent: Wednesday, April 17, 2019 3:17 PM
To: Craig Williams; Melanie Bethea; Long, Thomas
Cc: Bryan Tyler; Thorne Gregory
Subject: RE: X2 - Enthalpy POs 3049 and 3050 Submission

Hi Craig-

Yes I will be here. I will plan to see him tomorrow. Thanks!

Please take a moment to provide customer feedback.

ENTHALPY ANALYTICAL

Ashley Miller
Senior Project Manager
Enthalpy Analytical, LLC
800 Capitola Drive, Suite 1
Durham, NC 27713
(919) 850-4392
ashley.miller@enthalpy.com
www.enthalpy.com

Terms and Conditions
Enthalpy Sample Acceptance Policy
SSAS Laboratory ID: L0036, L0149 (metals only)

From: Craig Williams <CWilliams@css-inc.com>
Sent: Wednesday, April 17, 2019 3:15 PM
To: Ashley Miller <ashley.miller@enthalpy.com>; Melanie Bethea <melanie.bethea@enthalpy.com>; Long, Thomas <Long.Thomas@epa.gov>

Cc: Bryan Tyler <bryan.tyler@enthalpy.com>; Thorne Gregory <thorne.gregory@enthalpy.com>
Subject: RE: X2 - Enthalpy POs 3049 and 3050 Submission

Will you be there as the contact person?

Craig

Craig Williams
Senior Engineer
Contractor to the USEPA
CSS (Jacobs Teammate)
1910 Sedwick Road
Durham, NC 27713
Office Phone: (919) 541-0336
www.css-inc.com

From: Craig Williams
Sent: Wednesday, April 17, 2019 3:13 PM
To: Ashley Miller; Melanie Bethea; Long, Thomas
Cc: Bryan Tyler; Thorne Gregory
Subject: RE: X2 - Enthalpy POs 3049 and 3050 Submission

Ashley,
Daniel Janek from Jacobs will pick up the controller and plans to be there at 8:00.

Craig

Craig Williams
Senior Engineer
Contractor to the USEPA
CSS (Jacobs Teammate)
1910 Sedwick Road
Durham, NC 27713
Office Phone: (919) 541-0336
www.css-inc.com

From: Ashley Miller [ashley.miller@enthalpy.com]
Sent: Wednesday, April 17, 2019 2:53 PM
To: Craig Williams; Melanie Bethea; Long, Thomas
Cc: Bryan Tyler; Thorne Gregory
Subject: RE: X2 - Enthalpy POs 3049 and 3050 Submission

Craig-

Yes anytime after 8 am will work fine. Thanks!

Please take a moment to provide customer feedback.

ENTHALPY
ANALYTICAL

Ashley Miller
Senior Project Manager
Enthalpy Analytical, LLC
800 Capitola Drive, Suite 1
Durham, NC 27713

(919) 850-4392
ashley.miller@enthalpy.com
www.enthalpy.com

Terms and Conditions
Enthalpy Sample Acceptance Policy
SSAS Laboratory ID: L0036, L0149 (metals only)

From: Craig Williams <CWilliams@css-inc.com>
Sent: Wednesday, April 17, 2019 2:49 PM
To: Ashley Miller <ashley.miller@enthalpy.com>; Melanie Bethea <melanie.bethea@enthalpy.com>; Long, Thomas <Long.Thomas@epa.gov>
Cc: Bryan Tyler <bryan.tyler@enthalpy.com>; Thorne Gregory <thorne.gregory@enthalpy.com>
Subject: RE: X2 - Enthalpy POs 3049 and 3050 Submission

Yes, understood. The controller will not have been blank checked. Is it OK to send someone over early tomorrow morning?

Craig Williams
Senior Engineer
Contractor to the USEPA
CSS (Jacobs Teammate)
1910 Sedwick Road
Durham, NC 27713
Office Phone: (919) 541-0336
www.css-inc.com

From: Ashley Miller [ashley.miller@enthalpy.com]
Sent: Wednesday, April 17, 2019 2:45 PM
To: Craig Williams; Melanie Bethea; Long, Thomas
Cc: Bryan Tyler; Thorne Gregory
Subject: RE: X2 - Enthalpy POs 3049 and 3050 Submission

Hi Craig-

Just to confirm, the controller will not be blank-checked via GC/MS. It has been purging for quite some time so there is no reason to think there would be contamination, but just wanted to clarify that we will not have the instrument back up and running to be able to blank check prior to pickup.

Please take a moment to provide customer feedback.

ENTHALPY
ANALYTICAL

Ashley Miller
Senior Project Manager
Enthalpy Analytical, LLC
800 Capitola Drive, Suite 1
Durham, NC 27713
(919) 850-4392
ashley.miller@enthalpy.com
www.enthalpy.com

Terms and Conditions

Enthalpy Sample Acceptance Policy
SSAS Laboratory ID: L0036, L0149 (metals only)

From: Craig Williams <CWilliams@css-inc.com>
Sent: Wednesday, April 17, 2019 12:49 PM
To: Melanie Bethea <melanie.bethea@enthalpy.com>; Ashley Miller <ashley.miller@enthalpy.com>; Long, Thomas <Long.Thomas@epa.gov>
Cc: Bryan Tyler <bryan.tyler@enthalpy.com>; Thorne Gregory <thorne.gregory@enthalpy.com>
Subject: RE: X2 - Enthalpy POs 3049 and 3050 Submission

Hi Melanie,
We can send someone over first thing tomorrow morning to pick up the controller. Is that OK? What time will it be available?

Craig Williams
Senior Engineer
Contractor to the USEPA
CSS (Jacobs Teammate)
1910 Sedwick Road
Durham, NC 27713
Office Phone: (919) 541-0336
www.css-inc.com

From: Melanie Bethea [melanie.bethea@enthalpy.com]
Sent: Wednesday, April 17, 2019 11:12 AM
To: Ashley Miller; Craig Williams; Long, Thomas
Cc: Bryan Tyler; Thorne Gregory
Subject: RE: X2 - Enthalpy POs 3049 and 3050 Submission

Good Morning,

The requested controller has been purging with nitrogen for 18+ hours. We will not be able to blank check the controller today as the instruments is still coming on line.

Please let us know how you would like to proceed.

Thank you,
Melanie

Please take a moment to provide customer feedback.

ENTHALPY
ANALYTICAL

Melanie Bethea
Operations Manager
Enthalpy Analytical, LLC
800 Capitola Drive, Suite 1
Durham, NC 27713
(919) 850.4392
melanie.bethea@enthalpy.com
www.enthalpy.com

Terms and Conditions
Enthalpy Sample Acceptance Policy

SSAS Laboratory ID: L0036, L0149 (metals only)

From: Ashley Miller <ashley.miller@enthalpy.com>
Sent: Tuesday, April 16, 2019 2:37 PM
To: Craig Williams <CWilliams@css-inc.com>; Long, Thomas <Long.Thomas@epa.gov>
Cc: Bryan Tyler <bryan.tyler@enthalpy.com>; Thorne Gregory <thorne.gregory@enthalpy.com>; Melanie Bethea <melanie.bethea@enthalpy.com>
Subject: RE: X2 - Enthalpy POs 3049 and 3050 Submission

Understood. If things improve I will reach out. Thanks for your patience!

Please take a moment to provide customer feedback.

ENTHALPY ANALYTICAL

Ashley Miller
Senior Project Manager
Enthalpy Analytical, LLC
800 Capitola Drive, Suite 1
Durham, NC 27713
(919) 850-4392
ashley.miller@enthalpy.com
www.enthalpy.com

Terms and Conditions
Enthalpy Sample Acceptance Policy
SSAS Laboratory ID: L0036, L0149 (metals only)

From: Craig Williams <CWilliams@css-inc.com>
Sent: Tuesday, April 16, 2019 2:35 PM
To: Ashley Miller <ashley.miller@enthalpy.com>; Long, Thomas <Long.Thomas@epa.gov>
Cc: Bryan Tyler <bryan.tyler@enthalpy.com>; Thorne Gregory <thorne.gregory@enthalpy.com>; Melanie Bethea <melanie.bethea@enthalpy.com>
Subject: RE: X2 - Enthalpy POs 3049 and 3050 Submission

Hi Ashley,
I would like to hold off in the hopes that your instrument is back up and running tomorrow. I'll check back around 2:00 tomorrow.

I appreciate your effort.

Thanks,

Craig Williams
Senior Engineer
Contractor to the USEPA
CSS (Jacobs Teammate)
1910 Sedwick Road

Durham, NC 27713
Office Phone: (919) 541-0336
www.css-inc.com

From: Ashley Miller [ashley.miller@enthalpy.com]
Sent: Tuesday, April 16, 2019 2:15 PM
To: Craig Williams; Long, Thomas
Cc: Bryan Tyler; Thorne Gregory; Melanie Bethea
Subject: RE: X2 - Enthalpy POs 3049 and 3050 Submission

Hi Craig and Thomas-

Sorry to deliver sad news, but our instrument is down and will not be back up before tomorrow. Please let me know if you would like the additional controller, or if you would like to wait until we get the instrument back up and can blank check it. Please note, I can't guarantee we will be back up and running by any certain time tomorrow.

Sorry for the bad news. Let me know how to proceed. Thanks!

Please take a moment to provide customer feedback.

ENTHALPY
ANALYTICAL

Ashley Miller
Senior Project Manager
Enthalpy Analytical, LLC
800 Capitola Drive, Suite 1
Durham, NC 27713
(919) 850-4392
ashley.miller@enthalpy.com
www.enthalpy.com

Terms and Conditions
Enthalpy Sample Acceptance Policy
SSAS Laboratory ID: L0036, L0149 (metals only)

From: Craig Williams <CWilliams@css-inc.com>
Sent: Tuesday, April 16, 2019 1:03 PM
To: Long, Thomas <Long.Thomas@epa.gov>
Cc: Ashley Miller <ashley.miller@enthalpy.com>; Bryan Tyler <bryan.tyler@enthalpy.com>; Thorne Gregory <thorne.gregory@enthalpy.com>; Melanie Bethea <melanie.bethea@enthalpy.com>
Subject: Re: X2 - Enthalpy POs 3049 and 3050 Submission

Hi Ashley,
Thanks. It's important for us that it's blank checked. I can pick it up in the morning if you're able to have it ready and blank checked. Please let me know.

Thanks

Sent from my iPhone

On Apr 16, 2019, at 12:56 PM, Long, Thomas <Long.Thomas@epa.gov> wrote:

If we sent someone over at 8 am tomorrow to pick it up could we get one that had been blank checked?

_____
Thomas Long, Mechanical Engineer
Mail Drop E343-02
Building D Room 360
109 T. W. Alexander Drive
Research Triangle Park, NC 27711
Phone: 919-541-3944

From: Ashley Miller <ashley.miller@enthalpy.com>
Sent: Tuesday, April 16, 2019 12:51 PM
To: Craig Williams <CWilliams@css-inc.com>; Bryan Tyler <bryan.tyler@enthalpy.com>; Long, Thomas <Long.Thomas@epa.gov>
Cc: Thorne Gregory <thorne.gregory@enthalpy.com>; Melanie Bethea <melanie.bethea@enthalpy.com>
Subject: RE: X2 - Enthalpy POs 3049 and 3050 Submission

Hi Craig-

We can build another flow controller, but we will not be able to blank check it. If you guys are ok with using a flow controller that has not been blank-checked then I can have it over to you with the rest of the equipment this afternoon. It is very unlikely that this would result in any sort of contamination, and we are confident that the flow controller would be usable without concern as-is.

Let me know if this is acceptable, and I'll have it to you today. Thanks!

Please take a moment to provide customer feedback.

<image001.png>

Ashley Miller
Senior Project Manager
Enthalpy Analytical, LLC
800 Capitola Drive, Suite 1
Durham, NC 27713
(919) 850-4392
ashley.miller@enthalpy.com
www.enthalpy.com

Terms and Conditions
Enthalpy Sample Acceptance Policy
SSAS Laboratory ID: L0036, L0149 (metals only)

From: Craig Williams <CWilliams@css-inc.com>
Sent: Tuesday, April 16, 2019 12:28 PM
To: Ashley Miller <ashley.miller@enthalpy.com>; Bryan Tyler <bryan.tyler@enthalpy.com>; Long, Thomas <Long.Thomas@epa.gov>
Cc: Thorne Gregory <thorne.gregory@enthalpy.com>; Melanie Bethea <melanie.bethea@enthalpy.com>
Subject: RE: X2 - Enthalpy POs 3049 and 3050 Submission

Hi Ashley,
Thank you very much. Please let me know if it will be coming with the cans that Enthalpy's delivering today.

Craig

Craig Williams
Senior Engineer
Contractor to the USEPA
CSS (Jacobs Teammate)
1910 Sedwick Road
Durham, NC 27713
Office Phone: (919) 541-0336
www.css-inc.com

From: Ashley Miller [ashley.miller@enthalpy.com]
Sent: Tuesday, April 16, 2019 12:00 PM
To: Craig Williams; Bryan Tyler; Long, Thomas
Cc: Thorne Gregory; Melanie Bethea
Subject: RE: X2 - Enthalpy POs 3049 and 3050 Submission

Craig-

We are checking to see if we have another 200cc/min flow controller. I will be in touch soon.

Please take a moment to provide customer feedback.

<image001.png>

Ashley Miller
Senior Project Manager
Enthalpy Analytical, LLC
800 Capitola Drive, Suite 1
Durham, NC 27713
(919) 850-4392
ashley.miller@enthalpy.com
www.enthalpy.com

Terms and Conditions
Enthalpy Sample Acceptance Policy
SSAS Laboratory ID: L0036, L0149 (metals only)

From: Craig Williams <CWilliams@css-inc.com>
Sent: Tuesday, April 16, 2019 11:49 AM
To: Bryan Tyler <bryan.tyler@enthalpy.com>; Long, Thomas <Long.Thomas@epa.gov>
Cc: Thorne Gregory <thorne.gregory@enthalpy.com>; Melanie Bethea <melanie.bethea@enthalpy.com>; Ashley Miller <ashley.miller@enthalpy.com>
Subject: RE: X2 - Enthalpy POs 3049 and 3050 Submission

Bryan,
Tom says that he's short an orifice for the spiked can. Please send a 1377 sec/180 flow for the spiked can today.

Craig Williams
Senior Engineer
Contractor to the USEPA
CSS (Jacobs Teammate)
1910 Sedwick Road

Durham, NC 27713
Office Phone: (919) 541-0336
www.css-inc.com

From: Craig Williams
Sent: Tuesday, April 16, 2019 8:44 AM
To: Bryan Tyler; Long, Thomas
Cc: Thorne Gregory; Melanie Bethea; Ashley Miller
Subject: RE: X2 - Enthalpy POs 3049 and 3050 Submission

Hi Bryan,
I talked to Tom this morning and the answer from Jacobs and EPA is yes, running the samples after all have been received by Enthalpy is OK.

Thanks.

Craig Williams
Senior Engineer
Contractor to the USEPA
CSS (Jacobs Teammate)
1910 Sedwick Road
Durham, NC 27713
Office Phone: (919) 541-0336
www.css-inc.com

From: Bryan Tyler [bryan.tyler@enthalpy.com]
Sent: Monday, April 15, 2019 4:04 PM
To: Craig Williams; Long, Thomas
Cc: Thorne Gregory; Melanie Bethea; Ashley Miller
Subject: RE: X2 - Enthalpy POs 3049 and 3050 Submission

Hi All,
We will not run the samples until they are all received…with this schedule sample analysis will commence on 4/22.

Does this work for Jacobs/EPA?

Please take a moment to provide customer feedback.

<image001.png>

Bryan Tyler
Vice President
Enthalpy Analytical, LLC
800 Capitola Drive, Suite 1
Durham, NC 27713
(919) 850-4392
bryan.tyler@enthalpy.com
www.enthalpy.com

Terms and Conditions
Enthalpy Sample Acceptance Policy

SSAS Laboratory ID: L0036, L0149 (metals only)

From: Craig Williams <CWilliams@css-inc.com>
Sent: Monday, April 15, 2019 3:59 PM
To: Long, Thomas <Long.Thomas@epa.gov>; Bryan Tyler <bryan.tyler@enthalpy.com>
Cc: Thorne Gregory <thorne.gregory@enthalpy.com>; Melanie Bethea <melanie.bethea@enthalpy.com>; Ashley Miller <ashley.miller@enthalpy.com>
Subject: RE: X2 - Enthalpy POs 3049 and 3050 Submission

Hi Tom,
Enthalpy is only 5 minutes away. I think Jacobs can arrange for someone to drive the samples over tomorrow. Are you proposing taking them all at the end of the day or more frequent?

Craig Williams
Senior Engineer
Contractor to the USEPA
CSS (Jacobs Teammate)
1910 Sedwick Road
Durham, NC 27713
Office Phone: (919) 541-0336
www.css-inc.com

From: Long, Thomas [Long.Thomas@epa.gov]
Sent: Monday, April 15, 2019 3:14 PM
To: Craig Williams; Bryan Tyler
Cc: Thorne Gregory; Melanie Bethea; Ashley Miller
Subject: RE: X2 - Enthalpy POs 3049 and 3050 Submission

When we do cans in-house we generally try to run them within two hours or at least the same day as acrolein concentrations change pretty rapidly. The same day would be my preference.

_____

Thomas Long, Mechanical Engineer
Mail Drop E343-02
Building D Room 360
109 T. W. Alexander Drive
Research Triangle Park, NC 27711
Phone: 919-541-3944

From: Craig Williams <CWilliams@css-inc.com>
Sent: Monday, April 15, 2019 3:06 PM
To: Bryan Tyler <bryan.tyler@enthalpy.com>
Cc: Thorne Gregory <thorne.gregory@enthalpy.com>; Melanie Bethea <melanie.bethea@enthalpy.com>; Ashley Miller <ashley.miller@enthalpy.com>; Long, Thomas <Long.Thomas@epa.gov>
Subject: RE: X2 - Enthalpy POs 3049 and 3050 Submission

Hi Bryan,
What is the maximum hold time for the cans after sampling before analysis? Can we return all cans at the same time on Friday?

Tom,
Would this be acceptable?

If this is acceptable Jacobs can deliver the cans to Enthalpy.

Thanks

Craig Williams

Senior Engineer
Contractor to the USEPA
CSS (Jacobs Teammate)
1910 Sedwick Road
Durham, NC 27713
Office Phone: (919) 541-0336
www.css-inc.com

From: Bryan Tyler [bryan.tyler@enthalpy.com]
Sent: Friday, April 12, 2019 3:56 PM
To: Craig Williams
Cc: Thorne Gregory; Melanie Bethea; Ashley Miller; Long, Thomas
Subject: FW: X2 - Enthalpy POs 3049 and 3050 Submission

Hi Craig,
The below supplies will be ready for 2pm delivery on Monday.
- 8 x 6L Silco canisters individually blank checked
- 3 x Soil Gas Samplers @ ~200 cc/min
- 1 x Soil Gas Samplers @ ~650 cc/min

The below supplies will be ready for 2pm delivery on Tuesday.
- 8 x 6L Silco canisters individually blank checked

Durations from Tom Long:
- 1 can – 505 seconds (use the 650 cc/min controller)
- 1 can – 1377 seconds (use the 200 cc/min controller)
- 2 cans – 505 (ambient) (use the 650 cc/min controller)

Please take a moment to provide customer feedback.

<image001.png>

Bryan Tyler
Vice President
Enthalpy Analytical, LLC
800 Capitola Drive, Suite 1
Durham, NC 27713
(919) 850-4392
bryan.tyler@enthalpy.com
www.enthalpy.com

Terms and Conditions
Enthalpy Sample Acceptance Policy

SSAS Laboratory ID: L0036, L0149 (metals only)

From: Whicker, Crystal <Crystal.whicker@jacobs.com>
Sent: Thursday, April 11, 2019 3:13 PM
To: Bryan Tyler <bryan.tyler@enthalpy.com>

Cc: Williams, Craig <CWilliams@css-inc.com>
Subject: X2 - Enthalpy POs 3049 and 3050 Submission

Hello Bryan,

Find attached Jacobs Technology purchase orders EPATP0000003049 and EPATP0000003050.
Please confirm receipt via my email – crystal.whicker@jacobs.com.

Thank you,
Crystal Whicker
Procurement Administrator
Jacobs Technology

NOTICE - This communication may contain confidential and privileged information that is for the sole use of the intended recipient. Any viewing, copying or distribution of, or reliance on this message by unintended recipients is strictly prohibited. If you have received this message in error, please notify us immediately by replying to the message and deleting it from your computer.

CONFIDENTIALITY NOTICE: The contents of this email message and any attachments are intended solely for the addressee(s) and may contain confidential, proprietary and/or privileged information and may be legally protected from disclosure. If you are not the intended recipient of this message or their agent, or if this message has been addressed to you in error, please immediately alert the sender by reply email and then delete this message and any attachments and the reply from your system. If you are not the intended recipient, you are hereby notified that any disclosure, use, dissemination, copying, or storage of this message or its attachments is strictly prohibited.

NOTICE - This communication may contain confidential and privileged information that is for the sole use of the intended recipient. Any viewing, copying or distribution of, or reliance on this message by unintended recipients is strictly prohibited. If you have received this message in error, please notify us immediately by replying to the message and deleting it from your computer.

CONFIDENTIALITY NOTICE: The contents of this email message and any attachments are intended solely for the addressee(s) and may contain confidential, proprietary and/or privileged information and may be legally protected from disclosure. If you are not the intended recipient of this message or their agent, or if this message has been addressed to you in error, please immediately alert the sender by reply email and then delete this message and any attachments and the reply from your system. If you are not the intended recipient, you are hereby notified that any disclosure, use, dissemination, copying, or storage of this message or its attachments is strictly prohibited.

CONFIDENTIALITY NOTICE: The contents of this email message and any attachments are intended solely for the addressee(s) and may contain confidential, proprietary and/or privileged information and may be legally protected from disclosure. If you are not the intended recipient of this message or their agent, or if this message has been addressed to you in error, please immediately alert the sender by reply email and then delete this message and any attachments and the reply from your system. If you are not the intended recipient, you are hereby notified that any disclosure, use, dissemination, copying, or storage of this message or its attachments is strictly prohibited.

CONFIDENTIALITY NOTICE: The contents of this email message and any attachments are intended solely for the addressee(s) and may contain confidential, proprietary and/or privileged information and may be legally protected from disclosure. If you are not the intended recipient of this message or their agent, or if this message has been addressed to you in error, please immediately alert the sender by reply email and then delete this message and any attachments and the reply from your system. If you are not the intended recipient, you are hereby notified that any disclosure, use, dissemination, copying, or storage of this message or its attachments is strictly prohibited.

CONFIDENTIALITY NOTICE: The contents of this email message and any attachments are intended solely for the addressee(s) and may contain confidential, proprietary and/or privileged information and may be legally protected from disclosure. If you are

not the intended recipient of this message or their agent, or if this message has been addressed to you in error, please immediately alert the sender by reply email and then delete this message and any attachments and the reply from your system. If you are not the intended recipient, you are hereby notified that any disclosure, use, dissemination, copying, or storage of this message or its attachments is strictly prohibited.

CONFIDENTIALITY NOTICE: The contents of this email message and any attachments are intended solely for the addressee(s) and may contain confidential, proprietary and/or privileged information and may be legally protected from disclosure. If you are not the intended recipient of this message or their agent, or if this message has been addressed to you in error, please immediately alert the sender by reply email and then delete this message and any attachments and the reply from your system. If you are not the intended recipient, you are hereby notified that any disclosure, use, dissemination, copying, or storage of this message or its attachments is strictly prohibited.

CONFIDENTIALITY NOTICE: The contents of this email message and any attachments are intended solely for the addressee(s) and may contain confidential, proprietary and/or privileged information and may be legally protected from disclosure. If you are not the intended recipient of this message or their agent, or if this message has been addressed to you in error, please immediately alert the sender by reply email and then delete this message and any attachments and the reply from your system. If you are not the intended recipient, you are hereby notified that any disclosure, use, dissemination, copying, or storage of this message or its attachments is strictly prohibited.

CONFIDENTIALITY NOTICE: The contents of this email message and any attachments are intended solely for the addressee(s) and may contain confidential, proprietary and/or privileged information and may be legally protected from disclosure. If you are not the intended recipient of this message or their agent, or if this message has been addressed to you in error, please immediately alert the sender by reply email and then delete this message and any attachments and the reply from your system. If you are not the intended recipient, you are hereby notified that any disclosure, use, dissemination, copying, or storage of this message or its attachments is strictly prohibited.

CONFIDENTIALITY NOTICE: The contents of this email message and any attachments are intended solely for the addressee(s) and may contain confidential, proprietary and/or privileged information and may be legally protected from disclosure. If you are not the intended recipient of this message or their agent, or if this message has been addressed to you in error, please immediately alert the sender by reply email and then delete this message and any attachments and the reply from your system. If you are not the intended recipient, you are hereby notified that any disclosure, use, dissemination, copying, or storage of this message or its attachments is strictly prohibited.

CONFIDENTIALITY NOTICE: The contents of this email message and any attachments are intended solely for the addressee(s) and may contain confidential, proprietary and/or privileged information and may be legally protected from disclosure. If you are not the intended recipient of this message or their agent, or if this message has been addressed to you in error, please immediately alert the sender by reply email and then delete this message and any attachments and the reply from your system. If you are not the intended recipient, you are hereby notified that any disclosure, use, dissemination, copying, or storage of this message or its attachments is strictly prohibited.

CONFIDENTIALITY NOTICE: The contents of this email message and any attachments are intended solely for the addressee(s) and may contain confidential, proprietary and/or privileged information and may be legally protected from disclosure. If you are not the intended recipient of this message or their agent, or if this message has been addressed to you in error, please immediately alert the sender by reply email and then delete this message and any attachments and the reply from your system. If you are not the intended recipient, you are hereby notified that any disclosure, use, dissemination, copying, or storage of this message or its attachments is strictly prohibited.

CONFIDENTIALITY NOTICE: The contents of this email message and any attachments are intended solely for the addressee(s) and may contain confidential, proprietary and/or privileged information and may be legally protected from disclosure. If you are not the intended recipient of this message or their agent, or if this message has been addressed to you in error, please immediately alert the sender by reply email and then delete this message and any attachments and the reply from your system. If you are not the intended recipient, you are hereby notified that any disclosure, use, dissemination, copying, or storage of this message or its attachments is strictly prohibited.

CONFIDENTIALITY NOTICE: The contents of this email message and any attachments are intended solely for the addressee(s) and may contain confidential, proprietary and/or privileged information and may be legally protected from disclosure. If you are not the intended recipient of this message or their agent, or if this message has been addressed to you in error, please immediately alert the sender by reply email and then delete this message and any attachments and the reply from your system. If you are not the intended recipient, you are hereby notified that any disclosure, use, dissemination, copying, or storage of this message or its attachments is strictly prohibited.

CONFIDENTIALITY NOTICE: The contents of this email message and any attachments are intended solely for the addressee(s) and may contain confidential, proprietary and/or privileged information and may be legally protected from disclosure. If you are not the intended recipient of this message or their agent, or if this message has been addressed to you in error, please immediately alert the sender by reply email and then delete this message and any attachments and the reply from your system. If you are not the intended recipient, you are hereby notified that any disclosure, use, dissemination, copying, or storage of this message or its attachments is strictly prohibited.

CONFIDENTIALITY NOTICE: The contents of this email message and any attachments are intended solely for the addressee(s) and may contain confidential, proprietary and/or privileged information and may be legally protected from disclosure. If you are not the intended recipient of this message or their agent, or if this message has been addressed to you in error, please immediately alert the sender by reply email and then delete this message and any attachments and the reply from your system. If you are not the intended recipient, you are hereby notified that any disclosure, use, dissemination, copying, or storage of this message or its attachments is strictly prohibited.

CONFIDENTIALITY NOTICE: The contents of this email message and any attachments are intended solely for the addressee(s) and may contain confidential, proprietary and/or privileged information and may be legally protected from disclosure. If you are not the intended recipient of this message or their agent, or if this message has been addressed to you in error, please immediately alert the sender by reply email and then delete this message and any attachments and the reply from your system. If you are not the intended recipient, you are hereby notified that any disclosure, use, dissemination, copying, or storage of this message or its attachments is strictly prohibited.

Message

From: Bryan Tyler [bryan.tyler@enthalpy.com]
Sent: 4/1/2019 8:26:15 PM
To: David Berkowitz [David.Berkowitz@enthalpy.com]; Thorne Gregory [Thorne.Gregory@enthalpy.com]; Craig Williams [CWilliams@css-inc.com]; Long, Thomas [Long.Thomas@epa.gov]
Subject: Re: Call to discuss EtO

Thomas,
As mentioned pur PTR MS detection limit for Ethylene oxide is 150ppt real time.

Thanks,
Bryan

On Fri, Mar 29, 2019, 2:11 PM <btyler@montrose-env.com> wrote:

CONFIDENTIALITY NOTICE: The contents of this email message and any attachments are intended solely for the addressee(s) and may contain confidential, proprietary and/or privileged information and may be legally protected from disclosure. If you are not the intended recipient of this message or their agent, or if this message has been addressed to you in error, please immediately alert the sender by reply email and then delete this message and any attachments and the reply from your system. If you are not the intended recipient, you are hereby notified that any disclosure, use, dissemination, copying, or storage of this message or its attachments is strictly prohibited.

Message

From: Bryan Tyler [bryan.tyler@enthalpy.com]
Sent: 5/3/2019 10:11:11 PM
To: Craig Williams [CWilliams@css-inc.com]; Ashley Miller [ashley.miller@enthalpy.com]
CC: Thorne Gregory [thorne.gregory@enthalpy.com]; Melanie Bethea [melanie.bethea@enthalpy.com]; Long, Thomas [Long.Thomas@epa.gov]
Subject: RE: X2 - Enthalpy POs 3049 and 3050 Submission

Craig,
As scheduled the TO-15 will be done this weekend...we will provide an update again on Monday with the EO schedule for analysis which will be next week.

Please take a moment to provide customer feedback.

ENTHALPY ANALYTICAL

Bryan Tyler
Vice President
Enthalpy Analytical, LLC
800 Capitola Drive, Suite 1
Durham, NC 27713
(919) 850-4392
bryan.tyler@enthalpy.com
www.enthalpy.com

Terms and Conditions
Enthalpy Sample Acceptance Policy

SSAS Laboratory ID: L0036, L0149 (metals only)

From: Craig Williams <CWilliams@css-inc.com>
Sent: Friday, May 3, 2019 8:11 AM
To: Bryan Tyler <bryan.tyler@enthalpy.com>; Ashley Miller <ashley.miller@enthalpy.com>
Cc: Thorne Gregory <thorne.gregory@enthalpy.com>; Melanie Bethea <melanie.bethea@enthalpy.com>; Long, Thomas <Long.Thomas@epa.gov>
Subject: RE: X2 - Enthalpy POs 3049 and 3050 Submission

Bryan,
Please let us know how things progress.

Craig

Craig Williams
Senior Engineer
Contractor to the USEPA
CSS (Jacobs Teammate)
1910 Sedwick Road
Durham, NC 27713
Office Phone: (919) 541-0336

www.css-inc.com

From: Bryan Tyler [bryan.tyler@enthalpy.com]
Sent: Thursday, May 02, 2019 6:12 PM
To: Craig Williams; Ashley Miller
Cc: Thorne Gregory; Melanie Bethea; Long, Thomas
Subject: RE: X2 - Enthalpy POs 3049 and 3050 Submission

Craig,
This is my fault – sorry for the delay on my response. We are currently running the TO-15 analyses over the next 2 days and the Ethylene oxide analyses will run early next week. I am going to talk with our teams in the morning to get delivery times on this data.

I apologize this report is going to be late.

Bryan

Please take a moment to provide customer feedback.

ENTHALPY ANALYTICAL

Bryan Tyler
Vice President
Enthalpy Analytical, LLC
800 Capitola Drive, Suite 1
Durham, NC 27713
(919) 850-4392
bryan.tyler@enthalpy.com
www.enthalpy.com

Terms and Conditions
Enthalpy Sample Acceptance Policy

SSAS Laboratory ID: L0036, L0149 (metals only)

From: Craig Williams <CWilliams@css-inc.com>
Sent: Thursday, May 2, 2019 12:18 PM
To: Bryan Tyler <bryan.tyler@enthalpy.com>; Ashley Miller <ashley.miller@enthalpy.com>
Cc: Thorne Gregory <thorne.gregory@enthalpy.com>; Melanie Bethea <melanie.bethea@enthalpy.com>; Long, Thomas <Long.Thomas@epa.gov>
Subject: RE: X2 - Enthalpy POs 3049 and 3050 Submission

Hi Byran,
Can you please elaborate and provide an update by COB today?

Thanks,

Craig Williams
Senior Engineer
Contractor to the USEPA
CSS (Jacobs Teammate)
1910 Sedwick Road

Durham, NC 27713
Office Phone: (919) 541-0336
www.css-inc.com

From: Bryan Tyler [bryan.tyler@enthalpy.com]
Sent: Wednesday, May 01, 2019 2:55 PM
To: Craig Williams; Ashley Miller
Cc: Thorne Gregory; Melanie Bethea; Long, Thomas
Subject: RE: X2 - Enthalpy POs 3049 and 3050 Submission

Craig,
We have had some headwinds with this project – I will update you tonight/in the morning.

Bryan

Please take a moment to provide customer feedback.

ENTHALPY ANALYTICAL

Bryan Tyler
Vice President
Enthalpy Analytical, LLC
800 Capitola Drive, Suite 1
Durham, NC 27713
(919) 850-4392
bryan.tyler@enthalpy.com
www.enthalpy.com

Terms and Conditions
Enthalpy Sample Acceptance Policy

SSAS Laboratory ID: L0036, L0149 (metals only)

From: Craig Williams <CWilliams@css-inc.com>
Sent: Wednesday, May 1, 2019 10:03 AM
To: Bryan Tyler <bryan.tyler@enthalpy.com>; Ashley Miller <ashley.miller@enthalpy.com>
Cc: Thorne Gregory <thorne.gregory@enthalpy.com>; Melanie Bethea <melanie.bethea@enthalpy.com>; Long, Thomas <Long.Thomas@epa.gov>
Subject: RE: X2 - Enthalpy POs 3049 and 3050 Submission

Hi Bryan,
Just checking if all is going OK and on schedule.

Thanks

Craig Williams
Senior Engineer
Contractor to the USEPA
CSS (Jacobs Teammate)
1910 Sedwick Road

Durham, NC 27713
Office Phone: (919) 541-0336
www.css-inc.com

From: Bryan Tyler [bryan.tyler@enthalpy.com]
Sent: Tuesday, April 23, 2019 12:46 PM
To: Craig Williams; Ashley Miller
Cc: Thorne Gregory; Melanie Bethea; Long, Thomas
Subject: RE: X2 - Enthalpy POs 3049 and 3050 Submission

Samples have been received and are logged into the lab. Sample analysis will start later (keep in mind there are 4 separate analyses required) this week into next, final reports should be to you by COB next Friday 5/3.

Thanks,
Bryan

Please take a moment to provide customer feedback.

ENTHALPY ANALYTICAL

Bryan Tyler
Vice President
Enthalpy Analytical, LLC
800 Capitola Drive, Suite 1
Durham, NC 27713
(919) 850-4392
bryan.tyler@enthalpy.com
www.enthalpy.com

Terms and Conditions
Enthalpy Sample Acceptance Policy

SSAS Laboratory ID: L0036, L0149 (metals only)

From: Craig Williams <CWilliams@css-inc.com>
Sent: Tuesday, April 23, 2019 12:43 PM
To: Ashley Miller <ashley.miller@enthalpy.com>; Bryan Tyler <bryan.tyler@enthalpy.com>
Cc: Thorne Gregory <thorne.gregory@enthalpy.com>; Melanie Bethea <melanie.bethea@enthalpy.com>; Long, Thomas <Long.Thomas@epa.gov>
Subject: RE: X2 - Enthalpy POs 3049 and 3050 Submission

Hi Bryan and Ashley,
Can you please provide an update on the TO-15, EPA Method 3C, and EtO analysis and an estimate of when you will provide the results?

Thanks,

Craig Williams
Senior Engineer
Contractor to the USEPA
CSS (Jacobs Teammate)
1910 Sedwick Road

Durham, NC 27713
Office Phone: (919) 541-0336
www.css-inc.com

From: Ashley Miller [ashley.miller@enthalpy.com]
Sent: Wednesday, April 17, 2019 3:39 PM
To: Craig Williams; Melanie Bethea; Long, Thomas
Cc: Bryan Tyler; Thorne Gregory
Subject: RE: X2 - Enthalpy POs 3049 and 3050 Submission

Craig-

That will work fine. We can hold them until the rest arrive.

Please take a moment to provide customer feedback.

ENTHALPY ANALYTICAL

Ashley Miller
Senior Project Manager
Enthalpy Analytical, LLC
800 Capitola Drive, Suite 1
Durham, NC 27713
(919) 850-4392
ashley.miller@enthalpy.com
www.enthalpy.com

Terms and Conditions
Enthalpy Sample Acceptance Policy
SSAS Laboratory ID: L0036, L0149 (metals only)

From: Craig Williams <CWilliams@css-inc.com>
Sent: Wednesday, April 17, 2019 3:33 PM
To: Ashley Miller <ashley.miller@enthalpy.com>; Melanie Bethea <melanie.bethea@enthalpy.com>; Long, Thomas <Long.Thomas@epa.gov>
Cc: Bryan Tyler <bryan.tyler@enthalpy.com>; Thorne Gregory <thorne.gregory@enthalpy.com>
Subject: RE: X2 - Enthalpy POs 3049 and 3050 Submission

Daniel may bring a couple boxes of SUMMA cans with chain of custody forms when he picks up the controller. Is this OK? We'd bring the remaining cans over on Friday.

Craig Williams
Senior Engineer
Contractor to the USEPA
CSS (Jacobs Teammate)
1910 Sedwick Road
Durham, NC 27713
Office Phone: (919) 541-0336
www.css-inc.com

From: Ashley Miller [ashley.miller@enthalpy.com]
Sent: Wednesday, April 17, 2019 3:17 PM
To: Craig Williams; Melanie Bethea; Long, Thomas

Cc: Bryan Tyler; Thorne Gregory
Subject: RE: X2 - Enthalpy POs 3049 and 3050 Submission

Hi Craig-

Yes I will be here. I will plan to see him tomorrow. Thanks!

Please take a moment to provide customer feedback.

ENTHALPY ANALYTICAL

Ashley Miller
Senior Project Manager
Enthalpy Analytical, LLC
800 Capitola Drive, Suite 1
Durham, NC 27713
(919) 850-4392
ashley.miller@enthalpy.com
www.enthalpy.com

Terms and Conditions
Enthalpy Sample Acceptance Policy
SSAS Laboratory ID: L0036, L0149 (metals only)

From: Craig Williams <CWilliams@css-inc.com>
Sent: Wednesday, April 17, 2019 3:15 PM
To: Ashley Miller <ashley.miller@enthalpy.com>; Melanie Bethea <melanie.bethea@enthalpy.com>; Long, Thomas <Long.Thomas@epa.gov>
Cc: Bryan Tyler <bryan.tyler@enthalpy.com>; Thorne Gregory <thorne.gregory@enthalpy.com>
Subject: RE: X2 - Enthalpy POs 3049 and 3050 Submission

Will you be there as the contact person?

Craig

Craig Williams
Senior Engineer
Contractor to the USEPA
CSS (Jacobs Teammate)
1910 Sedwick Road
Durham, NC 27713
Office Phone: (919) 541-0336
www.css-inc.com

From: Craig Williams
Sent: Wednesday, April 17, 2019 3:13 PM
To: Ashley Miller; Melanie Bethea; Long, Thomas
Cc: Bryan Tyler; Thorne Gregory
Subject: RE: X2 - Enthalpy POs 3049 and 3050 Submission

Ashley,
Daniel Janek from Jacobs will pick up the controller and plans to be there at 8:00.

Craig

Craig Williams
Senior Engineer
Contractor to the USEPA
CSS (Jacobs Teammate)
1910 Sedwick Road
Durham, NC 27713
Office Phone: (919) 541-0336
www.css-inc.com

From: Ashley Miller [ashley.miller@enthalpy.com]
Sent: Wednesday, April 17, 2019 2:53 PM
To: Craig Williams; Melanie Bethea; Long, Thomas
Cc: Bryan Tyler; Thorne Gregory
Subject: RE: X2 - Enthalpy POs 3049 and 3050 Submission

Craig-

Yes anytime after 8 am will work fine. Thanks!

Please take a moment to provide customer feedback.

ENTHALPY ANALYTICAL

Ashley Miller
Senior Project Manager
Enthalpy Analytical, LLC
800 Capitola Drive, Suite 1
Durham, NC 27713
(919) 850-4392
ashley.miller@enthalpy.com
www.enthalpy.com

Terms and Conditions
Enthalpy Sample Acceptance Policy
SSAS Laboratory ID: L0036, L0149 (metals only)

From: Craig Williams <CWilliams@css-inc.com>
Sent: Wednesday, April 17, 2019 2:49 PM
To: Ashley Miller <ashley.miller@enthalpy.com>; Melanie Bethea <melanie.bethea@enthalpy.com>; Long, Thomas <Long.Thomas@epa.gov>
Cc: Bryan Tyler <bryan.tyler@enthalpy.com>; Thorne Gregory <thorne.gregory@enthalpy.com>
Subject: RE: X2 - Enthalpy POs 3049 and 3050 Submission

Yes, understood. The controller will not have been blank checked. Is it OK to send someone over early tomorrow morning?

Craig Williams
Senior Engineer
Contractor to the USEPA
CSS (Jacobs Teammate)
1910 Sedwick Road

Durham, NC 27713
Office Phone: (919) 541-0336
www.css-inc.com

From: Ashley Miller [ashley.miller@enthalpy.com]
Sent: Wednesday, April 17, 2019 2:45 PM
To: Craig Williams; Melanie Bethea; Long, Thomas
Cc: Bryan Tyler; Thorne Gregory
Subject: RE: X2 - Enthalpy POs 3049 and 3050 Submission

Hi Craig-

Just to confirm, the controller will not be blank-checked via GC/MS. It has been purging for quite some time so there is no reason to think there would be contamination, but just wanted to clarify that we will not have the instrument back up and running to be able to blank check prior to pickup.

Please take a moment to provide customer feedback.

ENTHALPY ANALYTICAL

Ashley Miller
Senior Project Manager
Enthalpy Analytical, LLC
800 Capitola Drive, Suite 1
Durham, NC 27713
(919) 850-4392
ashley.miller@enthalpy.com
www.enthalpy.com

Terms and Conditions
Enthalpy Sample Acceptance Policy
SSAS Laboratory ID: L0036, L0149 (metals only)

From: Craig Williams <CWilliams@css-inc.com>
Sent: Wednesday, April 17, 2019 12:49 PM
To: Melanie Bethea <melanie.bethea@enthalpy.com>; Ashley Miller <ashley.miller@enthalpy.com>; Long, Thomas <Long.Thomas@epa.gov>
Cc: Bryan Tyler <bryan.tyler@enthalpy.com>; Thorne Gregory <thorne.gregory@enthalpy.com>
Subject: RE: X2 - Enthalpy POs 3049 and 3050 Submission

Hi Melanie,
We can send someone over first thing tomorrow morning to pick up the controller. Is that OK? What time will it be available?

Craig Williams
Senior Engineer
Contractor to the USEPA
CSS (Jacobs Teammate)
1910 Sedwick Road
Durham, NC 27713
Office Phone: (919) 541-0336
www.css-inc.com

From: Melanie Bethea [melanie.bethea@enthalpy.com]
Sent: Wednesday, April 17, 2019 11:12 AM
To: Ashley Miller; Craig Williams; Long, Thomas
Cc: Bryan Tyler; Thorne Gregory
Subject: RE: X2 - Enthalpy POs 3049 and 3050 Submission

Good Morning,

The requested controller has been purging with nitrogen for 18+ hours. We will not be able to blank check the controller today as the instruments is still coming on line.

Please let us know how you would like to proceed.

Thank you,
Melanie

Please take a moment to provide customer feedback.

ENTHALPY ANALYTICAL

Melanie Bethea
Operations Manager
Enthalpy Analytical, LLC
800 Capitola Drive, Suite 1
Durham, NC 27713
(919) 850.4392
melanie.bethea@enthalpy.com
www.enthalpy.com

Terms and Conditions
Enthalpy Sample Acceptance Policy

SSAS Laboratory ID: L0036, L0149 (metals only)

From: Ashley Miller <ashley.miller@enthalpy.com>
Sent: Tuesday, April 16, 2019 2:37 PM
To: Craig Williams <CWilliams@css-inc.com>; Long, Thomas <Long.Thomas@epa.gov>
Cc: Bryan Tyler <bryan.tyler@enthalpy.com>; Thorne Gregory <thorne.gregory@enthalpy.com>; Melanie Bethea <melanie.bethea@enthalpy.com>
Subject: RE: X2 - Enthalpy POs 3049 and 3050 Submission

Understood. If things improve I will reach out. Thanks for your patience!

Please take a moment to provide customer feedback.

ENTHALPY ANALYTICAL

Ashley Miller
Senior Project Manager

Enthalpy Analytical, LLC
800 Capitola Drive, Suite 1
Durham, NC 27713
(919) 850-4392
ashley.miller@enthalpy.com
www.enthalpy.com

Terms and Conditions
Enthalpy Sample Acceptance Policy
SSAS Laboratory ID: L0036, L0149 (metals only)

From: Craig Williams <CWilliams@css-inc.com>
Sent: Tuesday, April 16, 2019 2:35 PM
To: Ashley Miller <ashley.miller@enthalpy.com>; Long, Thomas <Long.Thomas@epa.gov>
Cc: Bryan Tyler <bryan.tyler@enthalpy.com>; Thorne Gregory <thorne.gregory@enthalpy.com>; Melanie Bethea <melanie.bethea@enthalpy.com>
Subject: RE: X2 - Enthalpy POs 3049 and 3050 Submission

Hi Ashley,
I would like to hold off in the hopes that your instrument is back up and running tomorrow. I'll check back around 2:00 tomorrow.

I appreciate your effort.

Thanks,

Craig Williams
Senior Engineer
Contractor to the USEPA
CSS (Jacobs Teammate)
1910 Sedwick Road
Durham, NC 27713
Office Phone: (919) 541-0336
www.css-inc.com

From: Ashley Miller [ashley.miller@enthalpy.com]
Sent: Tuesday, April 16, 2019 2:15 PM
To: Craig Williams; Long, Thomas
Cc: Bryan Tyler; Thorne Gregory; Melanie Bethea
Subject: RE: X2 - Enthalpy POs 3049 and 3050 Submission

Hi Craig and Thomas-

Sorry to deliver sad news, but our instrument is down and will not be back up before tomorrow. Please let me know if you would like the additional controller, or if you would like to wait until we get the instrument back up and can blank check it. Please note, I can't guarantee we will be back up and running by any certain time tomorrow.

Sorry for the bad news. Let me know how to proceed. Thanks!

Please take a moment to provide customer feedback.

ENTHALPY
ANALYTICAL

Ashley Miller
Senior Project Manager
Enthalpy Analytical, LLC
800 Capitola Drive, Suite 1
Durham, NC 27713
(919) 850-4392
ashley.miller@enthalpy.com
www.enthalpy.com

Terms and Conditions
Enthalpy Sample Acceptance Policy
SSAS Laboratory ID: L0036, L0149 (metals only)

From: Craig Williams <CWilliams@css-inc.com>
Sent: Tuesday, April 16, 2019 1:03 PM
To: Long, Thomas <Long.Thomas@epa.gov>
Cc: Ashley Miller <ashley.miller@enthalpy.com>; Bryan Tyler <bryan.tyler@enthalpy.com>; Thorne Gregory <thorne.gregory@enthalpy.com>; Melanie Bethea <melanie.bethea@enthalpy.com>
Subject: Re: X2 - Enthalpy POs 3049 and 3050 Submission

Hi Ashley,
Thanks. It's important for us that it's blank checked. I can pick it up in the morning if you're able to have it ready and blank checked. Please let me know.

Thanks

Sent from my iPhone

On Apr 16, 2019, at 12:56 PM, Long, Thomas <Long.Thomas@epa.gov> wrote:

If we sent someone over at 8 am tomorrow to pick it up could we get one that had been blank checked?

_____
Thomas Long, Mechanical Engineer
Mail Drop E343-02
Building D Room 360
109 T. W. Alexander Drive
Research Triangle Park, NC 27711
Phone: 919-541-3944

From: Ashley Miller <ashley.miller@enthalpy.com>
Sent: Tuesday, April 16, 2019 12:51 PM
To: Craig Williams <CWilliams@css-inc.com>; Bryan Tyler <bryan.tyler@enthalpy.com>; Long, Thomas <Long.Thomas@epa.gov>
Cc: Thorne Gregory <thorne.gregory@enthalpy.com>; Melanie Bethea <melanie.bethea@enthalpy.com>
Subject: RE: X2 - Enthalpy POs 3049 and 3050 Submission

Hi Craig-

We can build another flow controller, but we will not be able to blank check it. If you guys are ok with using a flow controller that has not been blank-checked then I can have it over to you with the rest of the equipment this afternoon. It is very unlikely that this would result in any sort of contamination, and we are confident that the flow controller would be usable without concern as-is.

Let me know if this is acceptable, and I'll have it to you today. Thanks!

Please take a moment to provide customer feedback.

<image001.png>

Ashley Miller
Senior Project Manager
Enthalpy Analytical, LLC
800 Capitola Drive, Suite 1
Durham, NC 27713
(919) 850-4392
ashley.miller@enthalpy.com
www.enthalpy.com

Terms and Conditions
Enthalpy Sample Acceptance Policy
SSAS Laboratory ID: L0036, L0149 (metals only)

From: Craig Williams <CWilliams@css-inc.com>
Sent: Tuesday, April 16, 2019 12:28 PM
To: Ashley Miller <ashley.miller@enthalpy.com>; Bryan Tyler <bryan.tyler@enthalpy.com>; Long, Thomas <Long.Thomas@epa.gov>
Cc: Thorne Gregory <thorne.gregory@enthalpy.com>; Melanie Bethea <melanie.bethea@enthalpy.com>
Subject: RE: X2 - Enthalpy POs 3049 and 3050 Submission

Hi Ashley,
Thank you very much. Please let me know if it will be coming with the cans that Enthalpy's delivering today.

Craig

Craig Williams
Senior Engineer
Contractor to the USEPA
CSS (Jacobs Teammate)
1910 Sedwick Road
Durham, NC 27713
Office Phone: (919) 541-0336
www.css-inc.com

From: Ashley Miller [ashley.miller@enthalpy.com]
Sent: Tuesday, April 16, 2019 12:00 PM
To: Craig Williams; Bryan Tyler; Long, Thomas
Cc: Thorne Gregory; Melanie Bethea
Subject: RE: X2 - Enthalpy POs 3049 and 3050 Submission

Craig-

We are checking to see if we have another 200cc/min flow controller. I will be in touch soon.

Please take a moment to provide customer feedback.

<image001.png>

Ashley Miller
Senior Project Manager
Enthalpy Analytical, LLC
800 Capitola Drive, Suite 1
Durham, NC 27713
(919) 850-4392
ashley.miller@enthalpy.com
www.enthalpy.com

Terms and Conditions
Enthalpy Sample Acceptance Policy
SSAS Laboratory ID: L0036, L0149 (metals only)

From: Craig Williams <CWilliams@css-inc.com>
Sent: Tuesday, April 16, 2019 11:49 AM
To: Bryan Tyler <bryan.tyler@enthalpy.com>; Long, Thomas <Long.Thomas@epa.gov>
Cc: Thorne Gregory <thorne.gregory@enthalpy.com>; Melanie Bethea <melanie.bethea@enthalpy.com>; Ashley Miller <ashley.miller@enthalpy.com>
Subject: RE: X2 - Enthalpy POs 3049 and 3050 Submission

Bryan,
Tom says that he's short an orifice for the spiked can. Please send a 1377 sec/180 flow for the spiked can today.

Craig Williams
Senior Engineer
Contractor to the USEPA
CSS (Jacobs Teammate)
1910 Sedwick Road
Durham, NC 27713
Office Phone: (919) 541-0336
www.css-inc.com

From: Craig Williams
Sent: Tuesday, April 16, 2019 8:44 AM
To: Bryan Tyler; Long, Thomas
Cc: Thorne Gregory; Melanie Bethea; Ashley Miller
Subject: RE: X2 - Enthalpy POs 3049 and 3050 Submission

Hi Bryan,
I talked to Tom this morning and the answer from Jacobs and EPA is yes, running the samples after all have been received by Enthalpy is OK.

Thanks.

Craig Williams
Senior Engineer
Contractor to the USEPA
CSS (Jacobs Teammate)
1910 Sedwick Road
Durham, NC 27713
Office Phone: (919) 541-0336
www.css-inc.com

From: Bryan Tyler [bryan.tyler@enthalpy.com]
Sent: Monday, April 15, 2019 4:04 PM

To: Craig Williams; Long, Thomas
Cc: Thorne Gregory; Melanie Bethea; Ashley Miller
Subject: RE: X2 - Enthalpy POs 3049 and 3050 Submission

Hi All,
We will not run the samples until they are all received...with this schedule sample analysis will commence on 4/22.

Does this work for Jacobs/EPA?

Please take a moment to provide customer feedback.

<image001.png>

Bryan Tyler
Vice President
Enthalpy Analytical, LLC
800 Capitola Drive, Suite 1
Durham, NC 27713
(919) 850-4392
bryan.tyler@enthalpy.com
www.enthalpy.com

Terms and Conditions
Enthalpy Sample Acceptance Policy

SSAS Laboratory ID: L0036, L0149 (metals only)

From: Craig Williams <CWilliams@css-inc.com>
Sent: Monday, April 15, 2019 3:59 PM
To: Long, Thomas <Long.Thomas@epa.gov>; Bryan Tyler <bryan.tyler@enthalpy.com>
Cc: Thorne Gregory <thorne.gregory@enthalpy.com>; Melanie Bethea <melanie.bethea@enthalpy.com>; Ashley Miller <ashley.miller@enthalpy.com>
Subject: RE: X2 - Enthalpy POs 3049 and 3050 Submission

Hi Tom,
Enthalpy is only 5 minutes away. I think Jacobs can arrange for someone to drive the samples over tomorrow. Are you proposing taking them all at the end of the day or more frequent?

Craig Williams
Senior Engineer
Contractor to the USEPA
CSS (Jacobs Teammate)
1910 Sedwick Road
Durham, NC 27713
Office Phone: (919) 541-0336
www.css-inc.com

From: Long, Thomas [Long.Thomas@epa.gov]
Sent: Monday, April 15, 2019 3:14 PM
To: Craig Williams; Bryan Tyler
Cc: Thorne Gregory; Melanie Bethea; Ashley Miller
Subject: RE: X2 - Enthalpy POs 3049 and 3050 Submission

When we do cans in-house we generally try to run them within two hours or at least the same day as acrolein concentrations change pretty rapidly. The same day would be my preference.

_____

Thomas Long, Mechanical Engineer
Mail Drop E343-02
Building D Room 360
109 T. W. Alexander Drive
Research Triangle Park, NC 27711
Phone: 919-541-3944

From: Craig Williams <CWilliams@css-inc.com>
Sent: Monday, April 15, 2019 3:06 PM
To: Bryan Tyler <bryan.tyler@enthalpy.com>
Cc: Thorne Gregory <thorne.gregory@enthalpy.com>; Melanie Bethea <melanie.bethea@enthalpy.com>; Ashley Miller <ashley.miller@enthalpy.com>; Long, Thomas <Long.Thomas@epa.gov>
Subject: RE: X2 - Enthalpy POs 3049 and 3050 Submission

Hi Bryan,
What is the maximum hold time for the cans after sampling before analysis? Can we return all cans at the same time on Friday?

Tom,
Would this be acceptable?

If this is acceptable Jacobs can deliver the cans to Enthalpy.

Thanks

Craig Williams
Senior Engineer
Contractor to the USEPA
CSS (Jacobs Teammate)
1910 Sedwick Road
Durham, NC 27713
Office Phone: (919) 541-0336
www.css-inc.com

From: Bryan Tyler [bryan.tyler@enthalpy.com]
Sent: Friday, April 12, 2019 3:56 PM
To: Craig Williams
Cc: Thorne Gregory; Melanie Bethea; Ashley Miller; Long, Thomas
Subject: FW: X2 - Enthalpy POs 3049 and 3050 Submission

Hi Craig,
The below supplies will be ready for 2pm delivery on Monday.
- 8 x 6L Silco canisters individually blank checked
- 3 x Soil Gas Samplers @ ~200 cc/min
- 1 x Soil Gas Samplers @ ~650 cc/min

The below supplies will be ready for 2pm delivery on Tuesday.
- 8 x 6L Silco canisters individually blank checked

Durations from Tom Long:
- 1 can – 505 seconds (use the 650 cc/min controller)
- 1 can – 1377 seconds (use the 200 cc/min controller)

- 2 cans – 505 (ambient) (use the 650 cc/min controller)

Please take a moment to provide customer feedback.

<image001.png>

Bryan Tyler
Vice President
Enthalpy Analytical, LLC
800 Capitola Drive, Suite 1
Durham, NC 27713
(919) 850-4392
bryan.tyler@enthalpy.com
www.enthalpy.com

Terms and Conditions
Enthalpy Sample Acceptance Policy

SSAS Laboratory ID: L0036, L0149 (metals only)

From: Whicker, Crystal <Crystal.whicker@jacobs.com>
Sent: Thursday, April 11, 2019 3:13 PM
To: Bryan Tyler <bryan.tyler@enthalpy.com>
Cc: Williams, Craig <CWilliams@css-inc.com>
Subject: X2 - Enthalpy POs 3049 and 3050 Submission

Hello Bryan,

Find attached Jacobs Technology purchase orders EPATP0000003049 and EPATP0000003050.
Please confirm receipt via my email – crystal.whicker@jacobs.com.

Thank you,
Crystal Whicker
Procurement Administrator
Jacobs Technology

NOTICE - This communication may contain confidential and privileged information that is for the sole use of the intended recipient. Any viewing, copying or distribution of, or reliance on this message by unintended recipients is strictly prohibited. If you have received this message in error, please notify us immediately by replying to the message and deleting it from your computer.

CONFIDENTIALITY NOTICE: The contents of this email message and any attachments are intended solely for the addressee(s) and may contain confidential, proprietary and/or privileged information and may be legally protected from disclosure. If you are not the intended recipient of this message or their agent, or if this message has been addressed to you in error, please immediately alert the sender by reply email and then delete this message and any attachments and the reply from your system. If you are not the intended recipient, you are hereby notified that any disclosure, use, dissemination, copying, or storage of this message or its attachments is strictly prohibited.

NOTICE - This communication may contain confidential and privileged information that is for the sole use of the intended recipient. Any viewing, copying or distribution of, or reliance on this message by unintended recipients is strictly prohibited. If you have received this message in error, please notify us immediately by replying to the message and deleting it from your computer.

CONFIDENTIALITY NOTICE: The contents of this email message and any attachments are intended solely for the addressee(s) and may contain confidential, proprietary and/or privileged information and may be legally protected from disclosure. If you are not the intended recipient of this message or their agent, or if this message has been addressed to you in error, please immediately alert the sender by reply email and then delete this message and any attachments and the reply from your system. If you are not the intended recipient, you are hereby notified that any disclosure, use, dissemination, copying, or storage of this message or its attachments is strictly prohibited.

CONFIDENTIALITY NOTICE: The contents of this email message and any attachments are intended solely for the addressee(s) and may contain confidential, proprietary and/or privileged information and may be legally protected from disclosure. If you are not the intended recipient of this message or their agent, or if this message has been addressed to you in error, please immediately alert the sender by reply email and then delete this message and any attachments and the reply from your system. If you are not the intended recipient, you are hereby notified that any disclosure, use, dissemination, copying, or storage of this message or its attachments is strictly prohibited.

CONFIDENTIALITY NOTICE: The contents of this email message and any attachments are intended solely for the addressee(s) and may contain confidential, proprietary and/or privileged information and may be legally protected from disclosure. If you are not the intended recipient of this message or their agent, or if this message has been addressed to you in error, please immediately alert the sender by reply email and then delete this message and any attachments and the reply from your system. If you are not the intended recipient, you are hereby notified that any disclosure, use, dissemination, copying, or storage of this message or its attachments is strictly prohibited.

CONFIDENTIALITY NOTICE: The contents of this email message and any attachments are intended solely for the addressee(s) and may contain confidential, proprietary and/or privileged information and may be legally protected from disclosure. If you are not the intended recipient of this message or their agent, or if this message has been addressed to you in error, please immediately alert the sender by reply email and then delete this message and any attachments and the reply from your system. If you are not the intended recipient, you are hereby notified that any disclosure, use, dissemination, copying, or storage of this message or its attachments is strictly prohibited.

CONFIDENTIALITY NOTICE: The contents of this email message and any attachments are intended solely for the addressee(s) and may contain confidential, proprietary and/or privileged information and may be legally protected from disclosure. If you are not the intended recipient of this message or their agent, or if this message has been addressed to you in error, please immediately alert the sender by reply email and then delete this message and any attachments and the reply from your system. If you are not the intended recipient, you are hereby notified that any disclosure, use, dissemination, copying, or storage of this message or its attachments is strictly prohibited.

CONFIDENTIALITY NOTICE: The contents of this email message and any attachments are intended solely for the addressee(s) and may contain confidential, proprietary and/or privileged information and may be legally protected from disclosure. If you are not the intended recipient of this message or their agent, or if this message has been addressed to you in error, please immediately alert the sender by reply email and then delete this message and any attachments and the reply from your system. If you are not the intended recipient, you are hereby notified that any disclosure, use, dissemination, copying, or storage of this message or its attachments is strictly prohibited.

CONFIDENTIALITY NOTICE: The contents of this email message and any attachments are intended solely for the addressee(s) and may contain confidential, proprietary and/or privileged information and may be legally protected from disclosure. If you are not the intended recipient of this message or their agent, or if this message has been addressed to you in error, please immediately alert the sender by reply email and then delete this message and any attachments and the reply from your system. If you are not the intended recipient, you are hereby notified that any disclosure, use, dissemination, copying, or storage of this message or its attachments is strictly prohibited.

CONFIDENTIALITY NOTICE: The contents of this email message and any attachments are intended solely for the addressee(s) and may contain confidential, proprietary and/or privileged information and may be legally protected from disclosure. If you are not the intended recipient of this message or their agent, or if this message has been addressed to you in error, please immediately alert the sender by reply email and then delete this message and any attachments and the reply from your system. If you are not the intended recipient, you are hereby notified that any disclosure, use, dissemination, copying, or storage of this message or its attachments is strictly prohibited.

CONFIDENTIALITY NOTICE: The contents of this email message and any attachments are intended solely for the addressee(s) and may contain confidential, proprietary and/or privileged information and may be legally protected from disclosure. If you are not the intended recipient of this message or their agent, or if this message has been addressed to you in error, please immediately alert the sender by reply email and then delete this message and any attachments and the reply from your system. If you are not the intended recipient, you are hereby notified that any disclosure, use, dissemination, copying, or storage of this message or its attachments is strictly prohibited.

CONFIDENTIALITY NOTICE: The contents of this email message and any attachments are intended solely for the addressee(s) and may contain confidential, proprietary and/or privileged information and may be legally protected from disclosure. If you are not the intended recipient of this message or their agent, or if this message has been addressed to you in error, please immediately alert the sender by reply email and then delete this message and any attachments and the reply from your system. If you are not the intended recipient, you are hereby notified that any disclosure, use, dissemination, copying, or storage of this message or its attachments is strictly prohibited.

CONFIDENTIALITY NOTICE: The contents of this email message and any attachments are intended solely for the addressee(s) and may contain confidential, proprietary and/or privileged information and may be legally protected from disclosure. If you are not the intended recipient of this message or their agent, or if this message has been addressed to you in error, please immediately alert the sender by reply email and then delete this message and any attachments and the reply from your system. If you are not the intended recipient, you are hereby notified that any disclosure, use, dissemination, copying, or storage of this message or its attachments is strictly prohibited.

CONFIDENTIALITY NOTICE: The contents of this email message and any attachments are intended solely for the addressee(s) and may contain confidential, proprietary and/or privileged information and may be legally protected from disclosure. If you are not the intended recipient of this message or their agent, or if this message has been addressed to you in error, please immediately alert the sender by reply email and then delete this message and any attachments and the reply from your system. If you are not the intended recipient, you are hereby notified that any disclosure, use, dissemination, copying, or storage of this message or its attachments is strictly prohibited.

CONFIDENTIALITY NOTICE: The contents of this email message and any attachments are intended solely for the addressee(s) and may contain confidential, proprietary and/or privileged information and may be legally protected from disclosure. If you are not the intended recipient of this message or their agent, or if this message has been addressed to you in error, please immediately alert the sender by reply email and then delete this message and any attachments and the reply from your system. If you are not the intended recipient, you are hereby notified that any disclosure, use, dissemination, copying, or storage of this message or its attachments is strictly prohibited.

CONFIDENTIALITY NOTICE: The contents of this email message and any attachments are intended solely for the addressee(s) and may contain confidential, proprietary and/or privileged information and may be legally protected from disclosure. If you are not the intended recipient of this message or their agent, or if this message has been addressed to you in error, please immediately alert the sender by reply email and then delete this message and any attachments and the reply from your system. If you are not the intended recipient, you are hereby notified that any disclosure, use, dissemination, copying, or storage of this message or its attachments is strictly prohibited.

Message

From: Craig Williams [CWilliams@css-inc.com]
Sent: 5/2/2019 7:18:07 PM
To: Bryan Tyler [bryan.tyler@enthalpy.com]; Ashley Miller [ashley.miller@enthalpy.com]
CC: Thorne Gregory [thorne.gregory@enthalpy.com]; Melanie Bethea [melanie.bethea@enthalpy.com]; Long, Thomas [Long.Thomas@epa.gov]
Subject: RE: X2 - Enthalpy POs 3049 and 3050 Submission

Hi Byran,
Can you please elaborate and provide an update by COB today?

Thanks,

Craig Williams
Senior Engineer
Contractor to the USEPA
CSS (Jacobs Teammate)
1910 Sedwick Road
Durham, NC 27713
Office Phone: (919) 541-0336
www.css-inc.com

From: Bryan Tyler [bryan.tyler@enthalpy.com]
Sent: Wednesday, May 01, 2019 2:55 PM
To: Craig Williams; Ashley Miller
Cc: Thorne Gregory; Melanie Bethea; Long, Thomas
Subject: RE: X2 - Enthalpy POs 3049 and 3050 Submission

Craig,
We have had some headwinds with this project – I will update you tonight/in the morning.

Bryan

Please take a moment to provide customer feedback.

ENTHALPY ANALYTICAL

Bryan Tyler
Vice President
Enthalpy Analytical, LLC
800 Capitola Drive, Suite 1
Durham, NC 27713
(919) 850-4392
bryan.tyler@enthalpy.com
www.enthalpy.com

Terms and Conditions
Enthalpy Sample Acceptance Policy

SSAS Laboratory ID: L0036, L0149 (metals only)

From: Craig Williams <CWilliams@css-inc.com>
Sent: Wednesday, May 1, 2019 10:03 AM
To: Bryan Tyler <bryan.tyler@enthalpy.com>; Ashley Miller <ashley.miller@enthalpy.com>
Cc: Thorne Gregory <thorne.gregory@enthalpy.com>; Melanie Bethea <melanie.bethea@enthalpy.com>; Long, Thomas <Long.Thomas@epa.gov>
Subject: RE: X2 - Enthalpy POs 3049 and 3050 Submission

Hi Bryan,
Just checking if all is going OK and on schedule.

Thanks

Craig Williams
Senior Engineer
Contractor to the USEPA
CSS (Jacobs Teammate)
1910 Sedwick Road
Durham, NC 27713
Office Phone: (919) 541-0336
www.css-inc.com

From: Bryan Tyler [bryan.tyler@enthalpy.com]
Sent: Tuesday, April 23, 2019 12:46 PM
To: Craig Williams; Ashley Miller
Cc: Thorne Gregory; Melanie Bethea; Long, Thomas
Subject: RE: X2 - Enthalpy POs 3049 and 3050 Submission

Samples have been received and are logged into the lab. Sample analysis will start later (keep in mind there are 4 separate analyses required) this week into next, final reports should be to you by COB next Friday 5/3.

Thanks,
Bryan

Please take a moment to provide customer feedback.

ENTHALPY ANALYTICAL

Bryan Tyler
Vice President
Enthalpy Analytical, LLC
800 Capitola Drive, Suite 1
Durham, NC 27713
(919) 850-4392
bryan.tyler@enthalpy.com
www.enthalpy.com

Terms and Conditions
Enthalpy Sample Acceptance Policy

SSAS Laboratory ID: L0036, L0149 (metals only)

From: Craig Williams <CWilliams@css-inc.com>
Sent: Tuesday, April 23, 2019 12:43 PM
To: Ashley Miller <ashley.miller@enthalpy.com>; Bryan Tyler <bryan.tyler@enthalpy.com>
Cc: Thorne Gregory <thorne.gregory@enthalpy.com>; Melanie Bethea <melanie.bethea@enthalpy.com>; Long, Thomas <Long.Thomas@epa.gov>
Subject: RE: X2 - Enthalpy POs 3049 and 3050 Submission

Hi Bryan and Ashley,
Can you please provide an update on the TO-15, EPA Method 3C, and EtO analysis and an estimate of when you will provide the results?

Thanks,

Craig Williams
Senior Engineer
Contractor to the USEPA
CSS (Jacobs Teammate)
1910 Sedwick Road
Durham, NC 27713
Office Phone: (919) 541-0336
www.css-inc.com

From: Ashley Miller [ashley.miller@enthalpy.com]
Sent: Wednesday, April 17, 2019 3:39 PM
To: Craig Williams; Melanie Bethea; Long, Thomas
Cc: Bryan Tyler; Thorne Gregory
Subject: RE: X2 - Enthalpy POs 3049 and 3050 Submission

Craig-

That will work fine. We can hold them until the rest arrive.

Please take a moment to provide customer feedback.

ENTHALPY ANALYTICAL

Ashley Miller
Senior Project Manager
Enthalpy Analytical, LLC
800 Capitola Drive, Suite 1
Durham, NC 27713
(919) 850-4392
ashley.miller@enthalpy.com
www.enthalpy.com

Terms and Conditions
Enthalpy Sample Acceptance Policy
SSAS Laboratory ID: L0036, L0149 (metals only)

From: Craig Williams <CWilliams@css-inc.com>
Sent: Wednesday, April 17, 2019 3:33 PM
To: Ashley Miller <ashley.miller@enthalpy.com>; Melanie Bethea <melanie.bethea@enthalpy.com>; Long, Thomas <Long.Thomas@epa.gov>

Cc: Bryan Tyler <bryan.tyler@enthalpy.com>; Thorne Gregory <thorne.gregory@enthalpy.com>
Subject: RE: X2 - Enthalpy POs 3049 and 3050 Submission

Daniel may bring a couple boxes of SUMMA cans with chain of custody forms when he picks up the controller. Is this OK? We'd bring the remaining cans over on Friday.

Craig Williams
Senior Engineer
Contractor to the USEPA
CSS (Jacobs Teammate)
1910 Sedwick Road
Durham, NC 27713
Office Phone: (919) 541-0336
www.css-inc.com

From: Ashley Miller [ashley.miller@enthalpy.com]
Sent: Wednesday, April 17, 2019 3:17 PM
To: Craig Williams; Melanie Bethea; Long, Thomas
Cc: Bryan Tyler; Thorne Gregory
Subject: RE: X2 - Enthalpy POs 3049 and 3050 Submission

Hi Craig-

Yes I will be here. I will plan to see him tomorrow. Thanks!

Please take a moment to provide customer feedback.

ENTHALPY ANALYTICAL

Ashley Miller
Senior Project Manager
Enthalpy Analytical, LLC
800 Capitola Drive, Suite 1
Durham, NC 27713
(919) 850-4392
ashley.miller@enthalpy.com
www.enthalpy.com

Terms and Conditions
Enthalpy Sample Acceptance Policy
SSAS Laboratory ID: L0036, L0149 (metals only)

From: Craig Williams <CWilliams@css-inc.com>
Sent: Wednesday, April 17, 2019 3:15 PM
To: Ashley Miller <ashley.miller@enthalpy.com>; Melanie Bethea <melanie.bethea@enthalpy.com>; Long, Thomas <Long.Thomas@epa.gov>
Cc: Bryan Tyler <bryan.tyler@enthalpy.com>; Thorne Gregory <thorne.gregory@enthalpy.com>
Subject: RE: X2 - Enthalpy POs 3049 and 3050 Submission

Will you be there as the contact person?

Craig

Craig Williams
Senior Engineer
Contractor to the USEPA
CSS (Jacobs Teammate)
1910 Sedwick Road
Durham, NC 27713
Office Phone: (919) 541-0336
www.css-inc.com

From: Craig Williams
Sent: Wednesday, April 17, 2019 3:13 PM
To: Ashley Miller; Melanie Bethea; Long, Thomas
Cc: Bryan Tyler; Thorne Gregory
Subject: RE: X2 - Enthalpy POs 3049 and 3050 Submission

Ashley,
Daniel Janek from Jacobs will pick up the controller and plans to be there at 8:00.

Craig

Craig Williams
Senior Engineer
Contractor to the USEPA
CSS (Jacobs Teammate)
1910 Sedwick Road
Durham, NC 27713
Office Phone: (919) 541-0336
www.css-inc.com

From: Ashley Miller [ashley.miller@enthalpy.com]
Sent: Wednesday, April 17, 2019 2:53 PM
To: Craig Williams; Melanie Bethea; Long, Thomas
Cc: Bryan Tyler; Thorne Gregory
Subject: RE: X2 - Enthalpy POs 3049 and 3050 Submission

Craig-

Yes anytime after 8 am will work fine. Thanks!

Please take a moment to provide customer feedback.

ENTHALPY
ANALYTICAL

Ashley Miller
Senior Project Manager
Enthalpy Analytical, LLC
800 Capitola Drive, Suite 1
Durham, NC 27713
(919) 850-4392
ashley.miller@enthalpy.com
www.enthalpy.com

Terms and Conditions
Enthalpy Sample Acceptance Policy
SSAS Laboratory ID: L0036, L0149 (metals only)

From: Craig Williams <CWilliams@css-inc.com>
Sent: Wednesday, April 17, 2019 2:49 PM
To: Ashley Miller <ashley.miller@enthalpy.com>; Melanie Bethea <melanie.bethea@enthalpy.com>; Long, Thomas <Long.Thomas@epa.gov>
Cc: Bryan Tyler <bryan.tyler@enthalpy.com>; Thorne Gregory <thorne.gregory@enthalpy.com>
Subject: RE: X2 - Enthalpy POs 3049 and 3050 Submission

Yes, understood. The controller will not have been blank checked. Is it OK to send someone over early tomorrow morning?

Craig Williams
Senior Engineer
Contractor to the USEPA
CSS (Jacobs Teammate)
1910 Sedwick Road
Durham, NC 27713
Office Phone: (919) 541-0336
www.css-inc.com

From: Ashley Miller [ashley.miller@enthalpy.com]
Sent: Wednesday, April 17, 2019 2:45 PM
To: Craig Williams; Melanie Bethea; Long, Thomas
Cc: Bryan Tyler; Thorne Gregory
Subject: RE: X2 - Enthalpy POs 3049 and 3050 Submission

Hi Craig-

Just to confirm, the controller will not be blank-checked via GC/MS. It has been purging for quite some time so there is no reason to think there would be contamination, but just wanted to clarify that we will not have the instrument back up and running to be able to blank check prior to pickup.

Please take a moment to provide customer feedback.

ENTHALPY ANALYTICAL

Ashley Miller
Senior Project Manager
Enthalpy Analytical, LLC
800 Capitola Drive, Suite 1
Durham, NC 27713
(919) 850-4392
ashley.miller@enthalpy.com
www.enthalpy.com

Terms and Conditions
Enthalpy Sample Acceptance Policy
SSAS Laboratory ID: L0036, L0149 (metals only)

From: Craig Williams <CWilliams@css-inc.com>
Sent: Wednesday, April 17, 2019 12:49 PM
To: Melanie Bethea <melanie.bethea@enthalpy.com>; Ashley Miller <ashley.miller@enthalpy.com>; Long, Thomas <Long.Thomas@epa.gov>

Cc: Bryan Tyler <bryan.tyler@enthalpy.com>; Thorne Gregory <thorne.gregory@enthalpy.com>
Subject: RE: X2 - Enthalpy POs 3049 and 3050 Submission

Hi Melanie,
We can send someone over first thing tomorrow morning to pick up the controller. Is that OK? What time will it be available?

Craig Williams
Senior Engineer
Contractor to the USEPA
CSS (Jacobs Teammate)
1910 Sedwick Road
Durham, NC 27713
Office Phone: (919) 541-0336
www.css-inc.com

From: Melanie Bethea [melanie.bethea@enthalpy.com]
Sent: Wednesday, April 17, 2019 11:12 AM
To: Ashley Miller; Craig Williams; Long, Thomas
Cc: Bryan Tyler; Thorne Gregory
Subject: RE: X2 - Enthalpy POs 3049 and 3050 Submission

Good Morning,

The requested controller has been purging with nitrogen for 18+ hours. We will not be able to blank check the controller today as the instruments is still coming on line.

Please let us know how you would like to proceed.

Thank you,
Melanie

Please take a moment to provide customer feedback.

ENTHALPY ANALYTICAL

Melanie Bethea
Operations Manager
Enthalpy Analytical, LLC
800 Capitola Drive, Suite 1
Durham, NC 27713
(919) 850.4392
melanie.bethea@enthalpy.com
www.enthalpy.com

Terms and Conditions
Enthalpy Sample Acceptance Policy

SSAS Laboratory ID: L0036, L0149 (metals only)

From: Ashley Miller <ashley.miller@enthalpy.com>
Sent: Tuesday, April 16, 2019 2:37 PM

To: Craig Williams <CWilliams@css-inc.com>; Long, Thomas <Long.Thomas@epa.gov>
Cc: Bryan Tyler <bryan.tyler@enthalpy.com>; Thorne Gregory <thorne.gregory@enthalpy.com>; Melanie Bethea <melanie.bethea@enthalpy.com>
Subject: RE: X2 - Enthalpy POs 3049 and 3050 Submission

Understood. If things improve I will reach out. Thanks for your patience!

Please take a moment to provide customer feedback.

ENTHALPY ANALYTICAL

Ashley Miller
Senior Project Manager
Enthalpy Analytical, LLC
800 Capitola Drive, Suite 1
Durham, NC 27713
(919) 850-4392
ashley.miller@enthalpy.com
www.enthalpy.com

Terms and Conditions
Enthalpy Sample Acceptance Policy
SSAS Laboratory ID: L0036, L0149 (metals only)

From: Craig Williams <CWilliams@css-inc.com>
Sent: Tuesday, April 16, 2019 2:35 PM
To: Ashley Miller <ashley.miller@enthalpy.com>; Long, Thomas <Long.Thomas@epa.gov>
Cc: Bryan Tyler <bryan.tyler@enthalpy.com>; Thorne Gregory <thorne.gregory@enthalpy.com>; Melanie Bethea <melanie.bethea@enthalpy.com>
Subject: RE: X2 - Enthalpy POs 3049 and 3050 Submission

Hi Ashley,
I would like to hold off in the hopes that your instrument is back up and running tomorrow. I'll check back around 2:00 tomorrow.

I appreciate your effort.

Thanks,

Craig Williams
Senior Engineer
Contractor to the USEPA
CSS (Jacobs Teammate)
1910 Sedwick Road
Durham, NC 27713
Office Phone: (919) 541-0336
www.css-inc.com

From: Ashley Miller [ashley.miller@enthalpy.com]
Sent: Tuesday, April 16, 2019 2:15 PM
To: Craig Williams; Long, Thomas
Cc: Bryan Tyler; Thorne Gregory; Melanie Bethea
Subject: RE: X2 - Enthalpy POs 3049 and 3050 Submission

Hi Craig and Thomas-

Sorry to deliver sad news, but our instrument is down and will not be back up before tomorrow. Please let me know if you would like the additional controller, or if you would like to wait until we get the instrument back up and can blank check it. Please note, I can't guarantee we will be back up and running by any certain time tomorrow.

Sorry for the bad news. Let me know how to proceed. Thanks!

Please take a moment to provide customer feedback.

ENTHALPY ANALYTICAL

Ashley Miller
Senior Project Manager
Enthalpy Analytical, LLC
800 Capitola Drive, Suite 1
Durham, NC 27713
(919) 850-4392
ashley.miller@enthalpy.com
www.enthalpy.com

Terms and Conditions
Enthalpy Sample Acceptance Policy
SSAS Laboratory ID: L0036, L0149 (metals only)

From: Craig Williams <CWilliams@css-inc.com>
Sent: Tuesday, April 16, 2019 1:03 PM
To: Long, Thomas <Long.Thomas@epa.gov>
Cc: Ashley Miller <ashley.miller@enthalpy.com>; Bryan Tyler <bryan.tyler@enthalpy.com>; Thorne Gregory <thorne.gregory@enthalpy.com>; Melanie Bethea <melanie.bethea@enthalpy.com>
Subject: Re: X2 - Enthalpy POs 3049 and 3050 Submission

Hi Ashley,
Thanks. It's important for us that it's blank checked. I can pick it up in the morning if you're able to have it ready and blank checked. Please let me know.

Thanks

Sent from my iPhone

On Apr 16, 2019, at 12:56 PM, Long, Thomas <Long.Thomas@epa.gov> wrote:

If we sent someone over at 8 am tomorrow to pick it up could we get one that had been blank checked?

_____
Thomas Long, Mechanical Engineer
Mail Drop E343-02
Building D Room 360
109 T. W. Alexander Drive
Research Triangle Park, NC 27711
Phone: 919-541-3944

From: Ashley Miller <ashley.miller@enthalpy.com>
Sent: Tuesday, April 16, 2019 12:51 PM
To: Craig Williams <CWilliams@css-inc.com>; Bryan Tyler <bryan.tyler@enthalpy.com>; Long, Thomas <Long.Thomas@epa.gov>
Cc: Thorne Gregory <thorne.gregory@enthalpy.com>; Melanie Bethea <melanie.bethea@enthalpy.com>
Subject: RE: X2 - Enthalpy POs 3049 and 3050 Submission

Hi Craig-

We can build another flow controller, but we will not be able to blank check it. If you guys are ok with using a flow controller that has not been blank-checked then I can have it over to you with the rest of the equipment this afternoon. It is very unlikely that this would result in any sort of contamination, and we are confident that the flow controller would be usable without concern as-is.

Let me know if this is acceptable, and I'll have it to you today. Thanks!

Please take a moment to provide customer feedback.

<image001.png>

Ashley Miller
Senior Project Manager
Enthalpy Analytical, LLC
800 Capitola Drive, Suite 1
Durham, NC 27713
(919) 850-4392
ashley.miller@enthalpy.com
www.enthalpy.com

Terms and Conditions
Enthalpy Sample Acceptance Policy
SSAS Laboratory ID: L0036, L0149 (metals only)

From: Craig Williams <CWilliams@css-inc.com>
Sent: Tuesday, April 16, 2019 12:28 PM
To: Ashley Miller <ashley.miller@enthalpy.com>; Bryan Tyler <bryan.tyler@enthalpy.com>; Long, Thomas <Long.Thomas@epa.gov>
Cc: Thorne Gregory <thorne.gregory@enthalpy.com>; Melanie Bethea <melanie.bethea@enthalpy.com>
Subject: RE: X2 - Enthalpy POs 3049 and 3050 Submission

Hi Ashley,
Thank you very much. Please let me know if it will be coming with the cans that Enthalpy's delivering today.

Craig

Craig Williams
Senior Engineer
Contractor to the USEPA
CSS (Jacobs Teammate)
1910 Sedwick Road
Durham, NC 27713
Office Phone: (919) 541-0336
www.css-inc.com

From: Ashley Miller [ashley.miller@enthalpy.com]
Sent: Tuesday, April 16, 2019 12:00 PM
To: Craig Williams; Bryan Tyler; Long, Thomas
Cc: Thorne Gregory; Melanie Bethea
Subject: RE: X2 - Enthalpy POs 3049 and 3050 Submission

Craig-

We are checking to see if we have another 200cc/min flow controller. I will be in touch soon.

Please take a moment to provide customer feedback.

<image001.png>

Ashley Miller
Senior Project Manager
Enthalpy Analytical, LLC
800 Capitola Drive, Suite 1
Durham, NC 27713
(919) 850-4392
ashley.miller@enthalpy.com
www.enthalpy.com

Terms and Conditions
Enthalpy Sample Acceptance Policy
SSAS Laboratory ID: L0036, L0149 (metals only)

From: Craig Williams <CWilliams@css-inc.com>
Sent: Tuesday, April 16, 2019 11:49 AM
To: Bryan Tyler <bryan.tyler@enthalpy.com>; Long, Thomas <Long.Thomas@epa.gov>
Cc: Thorne Gregory <thorne.gregory@enthalpy.com>; Melanie Bethea <melanie.bethea@enthalpy.com>; Ashley Miller <ashley.miller@enthalpy.com>
Subject: RE: X2 - Enthalpy POs 3049 and 3050 Submission

Bryan,
Tom says that he's short an orifice for the spiked can. Please send a 1377 sec/180 flow for the spiked can today.

Craig Williams
Senior Engineer
Contractor to the USEPA
CSS (Jacobs Teammate)
1910 Sedwick Road
Durham, NC 27713
Office Phone: (919) 541-0336
www.css-inc.com

From: Craig Williams
Sent: Tuesday, April 16, 2019 8:44 AM
To: Bryan Tyler; Long, Thomas
Cc: Thorne Gregory; Melanie Bethea; Ashley Miller
Subject: RE: X2 - Enthalpy POs 3049 and 3050 Submission

Hi Bryan,

I talked to Tom this morning and the answer from Jacobs and EPA is yes, running the samples after all have been received by Enthalpy is OK.

Thanks.

Craig Williams
Senior Engineer
Contractor to the USEPA
CSS (Jacobs Teammate)
1910 Sedwick Road
Durham, NC 27713
Office Phone: (919) 541-0336
www.css-inc.com

From: Bryan Tyler [bryan.tyler@enthalpy.com]
Sent: Monday, April 15, 2019 4:04 PM
To: Craig Williams; Long, Thomas
Cc: Thorne Gregory; Melanie Bethea; Ashley Miller
Subject: RE: X2 - Enthalpy POs 3049 and 3050 Submission

Hi All,
We will not run the samples until they are all received...with this schedule sample analysis will commence on 4/22.

Does this work for Jacobs/EPA?

Please take a moment to provide customer feedback.

<image001.png>

Bryan Tyler
Vice President
Enthalpy Analytical, LLC
800 Capitola Drive, Suite 1
Durham, NC 27713
(919) 850-4392
bryan.tyler@enthalpy.com
www.enthalpy.com

Terms and Conditions
Enthalpy Sample Acceptance Policy

SSAS Laboratory ID: L0036, L0149 (metals only)

From: Craig Williams <CWilliams@css-inc.com>
Sent: Monday, April 15, 2019 3:59 PM
To: Long, Thomas <Long.Thomas@epa.gov>; Bryan Tyler <bryan.tyler@enthalpy.com>
Cc: Thorne Gregory <thorne.gregory@enthalpy.com>; Melanie Bethea <melanie.bethea@enthalpy.com>; Ashley Miller <ashley.miller@enthalpy.com>
Subject: RE: X2 - Enthalpy POs 3049 and 3050 Submission

Hi Tom,
Enthalpy is only 5 minutes away. I think Jacobs can arrange for someone to drive the samples over tomorrow. Are you proposing taking them all at the end of the day or more frequent?

Craig Williams
Senior Engineer
Contractor to the USEPA
CSS (Jacobs Teammate)
1910 Sedwick Road
Durham, NC 27713
Office Phone: (919) 541-0336
www.css-inc.com

From: Long, Thomas [Long.Thomas@epa.gov]
Sent: Monday, April 15, 2019 3:14 PM
To: Craig Williams; Bryan Tyler
Cc: Thorne Gregory; Melanie Bethea; Ashley Miller
Subject: RE: X2 - Enthalpy POs 3049 and 3050 Submission

When we do cans in-house we generally try to run them within two hours or at least the same day as acrolein concentrations change pretty rapidly. The same day would be my preference.

Thomas Long, Mechanical Engineer
Mail Drop E343-02
Building D Room 360
109 T. W. Alexander Drive
Research Triangle Park, NC 27711
Phone: 919-541-3944

From: Craig Williams <CWilliams@css-inc.com>
Sent: Monday, April 15, 2019 3:06 PM
To: Bryan Tyler <bryan.tyler@enthalpy.com>
Cc: Thorne Gregory <thorne.gregory@enthalpy.com>; Melanie Bethea <melanie.bethea@enthalpy.com>; Ashley Miller <ashley.miller@enthalpy.com>; Long, Thomas <Long.Thomas@epa.gov>
Subject: RE: X2 - Enthalpy POs 3049 and 3050 Submission

Hi Bryan,
What is the maximum hold time for the cans after sampling before analysis? Can we return all cans at the same time on Friday?

Tom,
Would this be acceptable?

If this is acceptable Jacobs can deliver the cans to Enthalpy.

Thanks

Craig Williams
Senior Engineer
Contractor to the USEPA
CSS (Jacobs Teammate)
1910 Sedwick Road
Durham, NC 27713
Office Phone: (919) 541-0336
www.css-inc.com

From: Bryan Tyler [bryan.tyler@enthalpy.com]
Sent: Friday, April 12, 2019 3:56 PM
To: Craig Williams

Cc: Thorne Gregory; Melanie Bethea; Ashley Miller; Long, Thomas
Subject: FW: X2 - Enthalpy POs 3049 and 3050 Submission

Hi Craig,
The below supplies will be ready for 2pm delivery on Monday.
- 8 x 6L Silco canisters individually blank checked
- 3 x Soil Gas Samplers @ ~200 cc/min
- 1 x Soil Gas Samplers @ ~650 cc/min

The below supplies will be ready for 2pm delivery on Tuesday.
- 8 x 6L Silco canisters individually blank checked

Durations from Tom Long:
- 1 can – 505 seconds (use the 650 cc/min controller)
- 1 can – 1377 seconds (use the 200 cc/min controller)
- 2 cans – 505 (ambient) (use the 650 cc/min controller)

Please take a moment to provide customer feedback.

<image001.png>

Bryan Tyler
Vice President
Enthalpy Analytical, LLC
800 Capitola Drive, Suite 1
Durham, NC 27713
(919) 850-4392
bryan.tyler@enthalpy.com
www.enthalpy.com

Terms and Conditions
Enthalpy Sample Acceptance Policy

SSAS Laboratory ID: L0036, L0149 (metals only)

From: Whicker, Crystal <Crystal.whicker@jacobs.com>
Sent: Thursday, April 11, 2019 3:13 PM
To: Bryan Tyler <bryan.tyler@enthalpy.com>
Cc: Williams, Craig <CWilliams@css-inc.com>
Subject: X2 - Enthalpy POs 3049 and 3050 Submission

Hello Bryan,

Find attached Jacobs Technology purchase orders EPATP0000003049 and EPATP0000003050.
Please confirm receipt via my email – crystal.whicker@jacobs.com.

Thank you,
Crystal Whicker
Procurement Administrator

Jacobs Technology

NOTICE - This communication may contain confidential and privileged information that is for the sole use of the intended recipient. Any viewing, copying or distribution of, or reliance on this message by unintended recipients is strictly prohibited. If you have received this message in error, please notify us immediately by replying to the message and deleting it from your computer.

CONFIDENTIALITY NOTICE: The contents of this email message and any attachments are intended solely for the addressee(s) and may contain confidential, proprietary and/or privileged information and may be legally protected from disclosure. If you are not the intended recipient of this message or their agent, or if this message has been addressed to you in error, please immediately alert the sender by reply email and then delete this message and any attachments and the reply from your system. If you are not the intended recipient, you are hereby notified that any disclosure, use, dissemination, copying, or storage of this message or its attachments is strictly prohibited.

NOTICE - This communication may contain confidential and privileged information that is for the sole use of the intended recipient. Any viewing, copying or distribution of, or reliance on this message by unintended recipients is strictly prohibited. If you have received this message in error, please notify us immediately by replying to the message and deleting it from your computer.

CONFIDENTIALITY NOTICE: The contents of this email message and any attachments are intended solely for the addressee(s) and may contain confidential, proprietary and/or privileged information and may be legally protected from disclosure. If you are not the intended recipient of this message or their agent, or if this message has been addressed to you in error, please immediately alert the sender by reply email and then delete this message and any attachments and the reply from your system. If you are not the intended recipient, you are hereby notified that any disclosure, use, dissemination, copying, or storage of this message or its attachments is strictly prohibited.

CONFIDENTIALITY NOTICE: The contents of this email message and any attachments are intended solely for the addressee(s) and may contain confidential, proprietary and/or privileged information and may be legally protected from disclosure. If you are not the intended recipient of this message or their agent, or if this message has been addressed to you in error, please immediately alert the sender by reply email and then delete this message and any attachments and the reply from your system. If you are not the intended recipient, you are hereby notified that any disclosure, use, dissemination, copying, or storage of this message or its attachments is strictly prohibited.

CONFIDENTIALITY NOTICE: The contents of this email message and any attachments are intended solely for the addressee(s) and may contain confidential, proprietary and/or privileged information and may be legally protected from disclosure. If you are not the intended recipient of this message or their agent, or if this message has been addressed to you in error, please immediately alert the sender by reply email and then delete this message and any attachments and the reply from your system. If you are not the intended recipient, you are hereby notified that any disclosure, use, dissemination, copying, or storage of this message or its attachments is strictly prohibited.

CONFIDENTIALITY NOTICE: The contents of this email message and any attachments are intended solely for the addressee(s) and may contain confidential, proprietary and/or privileged information and may be legally protected from disclosure. If you are not the intended recipient of this message or their agent, or if this message has been addressed to you in error, please immediately alert the sender by reply email and then delete this message and any attachments and the reply from your system. If you are not the intended recipient, you are hereby notified that any disclosure, use, dissemination, copying, or storage of this message or its attachments is strictly prohibited.

CONFIDENTIALITY NOTICE: The contents of this email message and any attachments are intended solely for the addressee(s) and may contain confidential, proprietary and/or privileged information and may be legally protected from disclosure. If you are not the intended recipient of this message or their agent, or if this message has been addressed to you in error, please immediately alert the sender by reply email and then delete this message and any attachments and the reply from your system. If you are not the intended recipient, you are hereby notified that any disclosure, use, dissemination, copying, or storage of this message or its attachments is strictly prohibited.

CONFIDENTIALITY NOTICE: The contents of this email message and any attachments are intended solely for the addressee(s) and may contain confidential, proprietary and/or privileged information and may be legally protected from disclosure. If you are not the intended recipient of this message or their agent, or if this message has been addressed to you in error, please immediately alert the sender by reply email and then delete this message and any attachments and the reply from your system. If you are not the intended recipient, you are hereby notified that any disclosure, use, dissemination, copying, or storage of this message or its attachments is strictly prohibited.

CONFIDENTIALITY NOTICE: The contents of this email message and any attachments are intended solely for the addressee(s) and may contain confidential, proprietary and/or privileged information and may be legally protected from disclosure. If you are not the intended recipient of this message or their agent, or if this message has been addressed to you in error, please immediately alert the sender by reply email and then delete this message and any attachments and the reply from your system. If you are not the intended recipient, you are hereby notified that any disclosure, use, dissemination, copying, or storage of this message or its attachments is strictly prohibited.

CONFIDENTIALITY NOTICE: The contents of this email message and any attachments are intended solely for the addressee(s) and may contain confidential, proprietary and/or privileged information and may be legally protected from disclosure. If you are not the intended recipient of this message or their agent, or if this message has been addressed to you in error, please immediately alert the sender by reply email and then delete this message and any attachments and the reply from your system. If you are not the intended recipient, you are hereby notified that any disclosure, use, dissemination, copying, or storage of this message or its attachments is strictly prohibited.

CONFIDENTIALITY NOTICE: The contents of this email message and any attachments are intended solely for the addressee(s) and may contain confidential, proprietary and/or privileged information and may be legally protected from disclosure. If you are not the intended recipient of this message or their agent, or if this message has been addressed to you in error, please immediately alert the sender by reply email and then delete this message and any attachments and the reply from your system. If you are not the intended recipient, you are hereby notified that any disclosure, use, dissemination, copying, or storage of this message or its attachments is strictly prohibited.

CONFIDENTIALITY NOTICE: The contents of this email message and any attachments are intended solely for the addressee(s) and may contain confidential, proprietary and/or privileged information and may be legally protected from disclosure. If you are not the intended recipient of this message or their agent, or if this message has been addressed to you in error, please immediately alert the sender by reply email and then delete this message and any attachments and the reply from your system. If you are not the intended recipient, you are hereby notified that any disclosure, use, dissemination, copying, or storage of this message or its attachments is strictly prohibited.

CONFIDENTIALITY NOTICE: The contents of this email message and any attachments are intended solely for the addressee(s) and may contain confidential, proprietary and/or privileged information and may be legally protected from disclosure. If you are not the intended recipient of this message or their agent, or if this message has been addressed to you in error, please immediately alert the sender by reply email and then delete this message and any attachments and the reply from your system. If you are not the intended recipient, you are hereby notified that any disclosure, use, dissemination, copying, or storage of this message or its attachments is strictly prohibited.

CONFIDENTIALITY NOTICE: The contents of this email message and any attachments are intended solely for the addressee(s) and may contain confidential, proprietary and/or privileged information and may be legally protected from disclosure. If you are not the intended recipient of this message or their agent, or if this message has been addressed to you in error, please immediately alert the sender by reply email and then delete this message and any attachments and the reply from your system. If you are not the intended recipient, you are hereby notified that any disclosure, use, dissemination, copying, or storage of this message or its attachments is strictly prohibited.

CONFIDENTIALITY NOTICE: The contents of this email message and any attachments are intended solely for the addressee(s) and may contain confidential, proprietary and/or privileged information and may be legally protected from disclosure. If you are not the intended recipient of this message or their agent, or if this message has been addressed to you in error, please immediately alert the sender by reply email and then delete this message and any attachments and the reply from your system. If you are not the intended recipient, you are hereby notified that any disclosure, use, dissemination, copying, or storage of this message or its attachments is strictly prohibited.

Message

From: Yelverton, Tiffany [Yelverton.Tiffany@epa.gov]
Sent: 5/17/2019 5:35:01 PM
To: Baldauf, Richard [Baldauf.Richard@epa.gov]
CC: Shores, Richard [Shores.Richard@epa.gov]; Long, Thomas [Long.Thomas@epa.gov]; McDonald, Joseph [McDonald.Joseph@epa.gov]
Subject: RE: RA4 EtO Draft Output Description (v1)

Works for me! I'm in the process up adding everything that has been sent to me thus far, so I think we'll be in good shape. Thank you for getting me both of these before the "deadline".

Best,
Tiffany

Tiffany L. B. Yelverton, Ph.D.
Mechanical Engineer
Stationary Source Branch
Office of Research & Development
U. S. Environmental Protection Agency
109 T. W. Alexander Drive (E305-01)
Research Triangle Park, NC 27711

919.541.9456 (office)
919.541.0554 (fax)

From: Baldauf, Richard
Sent: Friday, May 17, 2019 11:56 AM
To: Yelverton, Tiffany <Yelverton.Tiffany@epa.gov>
Cc: Shores, Richard <Shores.Richard@epa.gov>; Long, Thomas <Long.Thomas@epa.gov>; McDonald, Joseph <McDonald.Joseph@epa.gov>
Subject: RE: RA4 EtO Draft Output Description (v1)

Hi Tiffany,

We were thinking that a dyno EtO product would be good to include. How does this work for a placeholder for the first draft?

Product X: ***Assessing EtO Emissions from Motor Vehicles***
Brief Description and Research Use: The research would focus on conducting motor vehicle emissions measurements of EtO for on-road and non-road engines. Emissions characterization will be conducted using dynamometer and PEMS techniques, if appropriate, to understand the extent of emissions under varying technology, fuel and operating conditions.
Product Form: Data and/or Report detailing emission rates of EtO for varying engine types, fuels and operations
Key Words: Mobile sources, Dynamometer, PEMS, emission factors
Interdependencies (as appropriate): Development of appropriate measurement techniques for dynamometer and/or PEMS sampling, ability to develop a priority list of fleet types and fuels for sampling
Product Lead: TBD

Partners (as appropriate): OAQPS, OTAQ
Start Date: 09/2019 Delivery Date: 09/2021

From: Yelverton, Tiffany
Sent: Wednesday, May 15, 2019 4:44 PM
To: Weinstock, Lewis <Weinstock.Lewis@epa.gov>; Whitaker, Donald <Whitaker.Donald@epa.gov>; Oliver, Karen <Oliver.Karen@epa.gov>; George, Ingrid <George.Ingrid@epa.gov>; Hoyer, Marion <hoyer.marion@epa.gov>; Long, Thomas <Long.Thomas@epa.gov>; Thoma, Eben <Thoma.Eben@epa.gov>; Ryan, Jeff <Ryan.Jeff@epa.gov>; Kariher, Peter <Kariher.Peter@epa.gov>; Sieffert, Margaret <Sieffert.Margaret@epa.gov>; Shappley, Ned <Shappley.Ned@epa.gov>; Nash, Dave <Nash.Dave@epa.gov>; Dewees, Jason <Dewees.Jason@epa.gov>; Chen, Xi <Chen.Xi@epa.gov>; Trapp, Kristin <Trapp.Kristin@epa.gov>; Witt, Jon <Witt.Jon@epa.gov>; Baldauf, Richard <Baldauf.Richard@epa.gov>
Subject: RA4 EtO Draft Output Description (v1)

Hello All,

Please find attached a first, quick stab at the Output Description for the RA4 EtO Output. I wanted to get this to you in advance of our call tomorrow, but I know it is far from being done. I wanted something quick that we could discuss and then after the call I will set it up on a OneDrive so we can all edit, add, etc.

Thank you in advance to all that can make the call tomorrow and I look forward to our discussion!

Best,
Tiffany

Tiffany L. B. Yelverton, Ph.D.
Mechanical Engineer
Stationary Source Branch
Office of Research & Development
U. S. Environmental Protection Agency
109 T. W. Alexander Drive (E305-01)
Research Triangle Park, NC 27711

919.541.9456 (office)
919.541.0554 (fax)

Message

From: Craig Williams [CWilliams@css-inc.com]
Sent: 4/23/2019 4:42:52 PM
To: Ashley Miller [ashley.miller@enthalpy.com]; Bryan Tyler [bryan.tyler@enthalpy.com]
CC: Thorne Gregory [thorne.gregory@enthalpy.com]; Melanie Bethea [melanie.bethea@enthalpy.com]; Long, Thomas [Long.Thomas@epa.gov]
Subject: RE: X2 - Enthalpy POs 3049 and 3050 Submission

Hi Bryan and Ashley,
Can you please provide an update on the TO-15, EPA Method 3C, and EtO analysis and an estimate of when you will provide the results?

Thanks,

Craig Williams
Senior Engineer
Contractor to the USEPA
CSS (Jacobs Teammate)
1910 Sedwick Road
Durham, NC 27713
Office Phone: (919) 541-0336
www.css-inc.com

From: Ashley Miller [ashley.miller@enthalpy.com]
Sent: Wednesday, April 17, 2019 3:39 PM
To: Craig Williams; Melanie Bethea; Long, Thomas
Cc: Bryan Tyler; Thorne Gregory
Subject: RE: X2 - Enthalpy POs 3049 and 3050 Submission

Craig-

That will work fine. We can hold them until the rest arrive.

Please take a moment to provide customer feedback.

ENTHALPY ANALYTICAL

Ashley Miller
Senior Project Manager
Enthalpy Analytical, LLC
800 Capitola Drive, Suite 1
Durham, NC 27713
(919) 850-4392
ashley.miller@enthalpy.com
www.enthalpy.com

Terms and Conditions
Enthalpy Sample Acceptance Policy
SSAS Laboratory ID: L0036, L0149 (metals only)

From: Craig Williams <CWilliams@css-inc.com>
Sent: Wednesday, April 17, 2019 3:33 PM

To: Ashley Miller <ashley.miller@enthalpy.com>; Melanie Bethea <melanie.bethea@enthalpy.com>; Long, Thomas <Long.Thomas@epa.gov>
Cc: Bryan Tyler <bryan.tyler@enthalpy.com>; Thorne Gregory <thorne.gregory@enthalpy.com>
Subject: RE: X2 - Enthalpy POs 3049 and 3050 Submission

Daniel may bring a couple boxes of SUMMA cans with chain of custody forms when he picks up the controller. Is this OK? We'd bring the remaining cans over on Friday.

Craig Williams
Senior Engineer
Contractor to the USEPA
CSS (Jacobs Teammate)
1910 Sedwick Road
Durham, NC 27713
Office Phone: (919) 541-0336
www.css-inc.com

From: Ashley Miller [ashley.miller@enthalpy.com]
Sent: Wednesday, April 17, 2019 3:17 PM
To: Craig Williams; Melanie Bethea; Long, Thomas
Cc: Bryan Tyler; Thorne Gregory
Subject: RE: X2 - Enthalpy POs 3049 and 3050 Submission

Hi Craig-

Yes I will be here. I will plan to see him tomorrow. Thanks!

Please take a moment to provide customer feedback.

ENTHALPY ANALYTICAL

Ashley Miller
Senior Project Manager
Enthalpy Analytical, LLC
800 Capitola Drive, Suite 1
Durham, NC 27713
(919) 850-4392
ashley.miller@enthalpy.com
www.enthalpy.com

Terms and Conditions
Enthalpy Sample Acceptance Policy
SSAS Laboratory ID: L0036, L0149 (metals only)

From: Craig Williams <CWilliams@css-inc.com>
Sent: Wednesday, April 17, 2019 3:15 PM
To: Ashley Miller <ashley.miller@enthalpy.com>; Melanie Bethea <melanie.bethea@enthalpy.com>; Long, Thomas <Long.Thomas@epa.gov>
Cc: Bryan Tyler <bryan.tyler@enthalpy.com>; Thorne Gregory <thorne.gregory@enthalpy.com>
Subject: RE: X2 - Enthalpy POs 3049 and 3050 Submission

Will you be there as the contact person?

Craig

Craig Williams
Senior Engineer
Contractor to the USEPA
CSS (Jacobs Teammate)
1910 Sedwick Road
Durham, NC 27713
Office Phone: (919) 541-0336
www.css-inc.com

From: Craig Williams
Sent: Wednesday, April 17, 2019 3:13 PM
To: Ashley Miller; Melanie Bethea; Long, Thomas
Cc: Bryan Tyler; Thorne Gregory
Subject: RE: X2 - Enthalpy POs 3049 and 3050 Submission

Ashley,
Daniel Janek from Jacobs will pick up the controller and plans to be there at 8:00.

Craig

Craig Williams
Senior Engineer
Contractor to the USEPA
CSS (Jacobs Teammate)
1910 Sedwick Road
Durham, NC 27713
Office Phone: (919) 541-0336
www.css-inc.com

From: Ashley Miller [ashley.miller@enthalpy.com]
Sent: Wednesday, April 17, 2019 2:53 PM
To: Craig Williams; Melanie Bethea; Long, Thomas
Cc: Bryan Tyler; Thorne Gregory
Subject: RE: X2 - Enthalpy POs 3049 and 3050 Submission

Craig-

Yes anytime after 8 am will work fine. Thanks!

Please take a moment to provide customer feedback.

ENTHALPY
ANALYTICAL

Ashley Miller
Senior Project Manager
Enthalpy Analytical, LLC
800 Capitola Drive, Suite 1
Durham, NC 27713
(919) 850-4392
ashley.miller@enthalpy.com
www.enthalpy.com

Terms and Conditions

Enthalpy Sample Acceptance Policy
SSAS Laboratory ID: L0036, L0149 (metals only)

From: Craig Williams <CWilliams@css-inc.com>
Sent: Wednesday, April 17, 2019 2:49 PM
To: Ashley Miller <ashley.miller@enthalpy.com>; Melanie Bethea <melanie.bethea@enthalpy.com>; Long, Thomas <Long.Thomas@epa.gov>
Cc: Bryan Tyler <bryan.tyler@enthalpy.com>; Thorne Gregory <thorne.gregory@enthalpy.com>
Subject: RE: X2 - Enthalpy POs 3049 and 3050 Submission

Yes, understood. The controller will not have been blank checked. Is it OK to send someone over early tomorrow morning?

Craig Williams
Senior Engineer
Contractor to the USEPA
CSS (Jacobs Teammate)
1910 Sedwick Road
Durham, NC 27713
Office Phone: (919) 541-0336
www.css-inc.com

From: Ashley Miller [ashley.miller@enthalpy.com]
Sent: Wednesday, April 17, 2019 2:45 PM
To: Craig Williams; Melanie Bethea; Long, Thomas
Cc: Bryan Tyler; Thorne Gregory
Subject: RE: X2 - Enthalpy POs 3049 and 3050 Submission

Hi Craig-

Just to confirm, the controller will not be blank-checked via GC/MS. It has been purging for quite some time so there is no reason to think there would be contamination, but just wanted to clarify that we will not have the instrument back up and running to be able to blank check prior to pickup.

Please take a moment to provide customer feedback.

ENTHALPY
ANALYTICAL

Ashley Miller
Senior Project Manager
Enthalpy Analytical, LLC
800 Capitola Drive, Suite 1
Durham, NC 27713
(919) 850-4392
ashley.miller@enthalpy.com
www.enthalpy.com

Terms and Conditions
Enthalpy Sample Acceptance Policy
SSAS Laboratory ID: L0036, L0149 (metals only)

From: Craig Williams <CWilliams@css-inc.com>
Sent: Wednesday, April 17, 2019 12:49 PM

To: Melanie Bethea <melanie.bethea@enthalpy.com>; Ashley Miller <ashley.miller@enthalpy.com>; Long, Thomas <Long.Thomas@epa.gov>
Cc: Bryan Tyler <bryan.tyler@enthalpy.com>; Thorne Gregory <thorne.gregory@enthalpy.com>
Subject: RE: X2 - Enthalpy POs 3049 and 3050 Submission

Hi Melanie,
We can send someone over first thing tomorrow morning to pick up the controller. Is that OK? What time will it be available?

Craig Williams
Senior Engineer
Contractor to the USEPA
CSS (Jacobs Teammate)
1910 Sedwick Road
Durham, NC 27713
Office Phone: (919) 541-0336
www.css-inc.com

From: Melanie Bethea [melanie.bethea@enthalpy.com]
Sent: Wednesday, April 17, 2019 11:12 AM
To: Ashley Miller; Craig Williams; Long, Thomas
Cc: Bryan Tyler; Thorne Gregory
Subject: RE: X2 - Enthalpy POs 3049 and 3050 Submission

Good Morning,

The requested controller has been purging with nitrogen for 18+ hours. We will not be able to blank check the controller today as the instruments is still coming on line.

Please let us know how you would like to proceed.

Thank you,
Melanie

Please take a moment to provide customer feedback.

ENTHALPY
ANALYTICAL

Melanie Bethea
Operations Manager
Enthalpy Analytical, LLC
800 Capitola Drive, Suite 1
Durham, NC 27713
(919) 850.4392
melanie.bethea@enthalpy.com
www.enthalpy.com

Terms and Conditions
Enthalpy Sample Acceptance Policy

SSAS Laboratory ID: L0036, L0149 (metals only)

From: Ashley Miller <ashley.miller@enthalpy.com>
Sent: Tuesday, April 16, 2019 2:37 PM
To: Craig Williams <CWilliams@css-inc.com>; Long, Thomas <Long.Thomas@epa.gov>
Cc: Bryan Tyler <bryan.tyler@enthalpy.com>; Thorne Gregory <thorne.gregory@enthalpy.com>; Melanie Bethea <melanie.bethea@enthalpy.com>
Subject: RE: X2 - Enthalpy POs 3049 and 3050 Submission

Understood. If things improve I will reach out. Thanks for your patience!

Please take a moment to provide customer feedback.

ENTHALPY ANALYTICAL

Ashley Miller
Senior Project Manager
Enthalpy Analytical, LLC
800 Capitola Drive, Suite 1
Durham, NC 27713
(919) 850-4392
ashley.miller@enthalpy.com
www.enthalpy.com

Terms and Conditions
Enthalpy Sample Acceptance Policy
SSAS Laboratory ID: L0036, L0149 (metals only)

From: Craig Williams <CWilliams@css-inc.com>
Sent: Tuesday, April 16, 2019 2:35 PM
To: Ashley Miller <ashley.miller@enthalpy.com>; Long, Thomas <Long.Thomas@epa.gov>
Cc: Bryan Tyler <bryan.tyler@enthalpy.com>; Thorne Gregory <thorne.gregory@enthalpy.com>; Melanie Bethea <melanie.bethea@enthalpy.com>
Subject: RE: X2 - Enthalpy POs 3049 and 3050 Submission

Hi Ashley,
I would like to hold off in the hopes that your instrument is back up and running tomorrow. I'll check back around 2:00 tomorrow.

I appreciate your effort.

Thanks,

Craig Williams
Senior Engineer
Contractor to the USEPA
CSS (Jacobs Teammate)
1910 Sedwick Road
Durham, NC 27713
Office Phone: (919) 541-0336
www.css-inc.com

From: Ashley Miller [ashley.miller@enthalpy.com]
Sent: Tuesday, April 16, 2019 2:15 PM
To: Craig Williams; Long, Thomas

Cc: Bryan Tyler; Thorne Gregory; Melanie Bethea
Subject: RE: X2 - Enthalpy POs 3049 and 3050 Submission

Hi Craig and Thomas-

Sorry to deliver sad news, but our instrument is down and will not be back up before tomorrow. Please let me know if you would like the additional controller, or if you would like to wait until we get the instrument back up and can blank check it. Please note, I can't guarantee we will be back up and running by any certain time tomorrow.

Sorry for the bad news. Let me know how to proceed. Thanks!

Please take a moment to provide customer feedback.

ENTHALPY ANALYTICAL

Ashley Miller
Senior Project Manager
Enthalpy Analytical, LLC
800 Capitola Drive, Suite 1
Durham, NC 27713
(919) 850-4392
ashley.miller@enthalpy.com
www.enthalpy.com

Terms and Conditions
Enthalpy Sample Acceptance Policy
SSAS Laboratory ID: L0036, L0149 (metals only)

From: Craig Williams <CWilliams@css-inc.com>
Sent: Tuesday, April 16, 2019 1:03 PM
To: Long, Thomas <Long.Thomas@epa.gov>
Cc: Ashley Miller <ashley.miller@enthalpy.com>; Bryan Tyler <bryan.tyler@enthalpy.com>; Thorne Gregory <thorne.gregory@enthalpy.com>; Melanie Bethea <melanie.bethea@enthalpy.com>
Subject: Re: X2 - Enthalpy POs 3049 and 3050 Submission

Hi Ashley,
Thanks. It's important for us that it's blank checked. I can pick it up in the morning if you're able to have it ready and blank checked. Please let me know.

Thanks

Sent from my iPhone

On Apr 16, 2019, at 12:56 PM, Long, Thomas <Long.Thomas@epa.gov> wrote:

If we sent someone over at 8 am tomorrow to pick it up could we get one that had been blank checked?

_____
Thomas Long, Mechanical Engineer
Mail Drop E343-02
Building D Room 360
109 T. W. Alexander Drive

Research Triangle Park, NC 27711
Phone: 919-541-3944

From: Ashley Miller <ashley.miller@enthalpy.com>
Sent: Tuesday, April 16, 2019 12:51 PM
To: Craig Williams <CWilliams@css-inc.com>; Bryan Tyler <bryan.tyler@enthalpy.com>; Long, Thomas <Long.Thomas@epa.gov>
Cc: Thorne Gregory <thorne.gregory@enthalpy.com>; Melanie Bethea <melanie.bethea@enthalpy.com>
Subject: RE: X2 - Enthalpy POs 3049 and 3050 Submission

Hi Craig-

We can build another flow controller, but we will not be able to blank check it. If you guys are ok with using a flow controller that has not been blank-checked then I can have it over to you with the rest of the equipment this afternoon. It is very unlikely that this would result in any sort of contamination, and we are confident that the flow controller would be usable without concern as-is.

Let me know if this is acceptable, and I'll have it to you today. Thanks!

Please take a moment to provide customer feedback.

<image001.png>

Ashley Miller
Senior Project Manager
Enthalpy Analytical, LLC
800 Capitola Drive, Suite 1
Durham, NC 27713
(919) 850-4392
ashley.miller@enthalpy.com
www.enthalpy.com

Terms and Conditions
Enthalpy Sample Acceptance Policy
SSAS Laboratory ID: L0036, L0149 (metals only)

From: Craig Williams <CWilliams@css-inc.com>
Sent: Tuesday, April 16, 2019 12:28 PM
To: Ashley Miller <ashley.miller@enthalpy.com>; Bryan Tyler <bryan.tyler@enthalpy.com>; Long, Thomas <Long.Thomas@epa.gov>
Cc: Thorne Gregory <thorne.gregory@enthalpy.com>; Melanie Bethea <melanie.bethea@enthalpy.com>
Subject: RE: X2 - Enthalpy POs 3049 and 3050 Submission

Hi Ashley,
Thank you very much. Please let me know if it will be coming with the cans that Enthalpy's delivering today.

Craig

Craig Williams
Senior Engineer
Contractor to the USEPA
CSS (Jacobs Teammate)
1910 Sedwick Road

Durham, NC 27713
Office Phone: (919) 541-0336
www.css-inc.com

From: Ashley Miller [ashley.miller@enthalpy.com]
Sent: Tuesday, April 16, 2019 12:00 PM
To: Craig Williams; Bryan Tyler; Long, Thomas
Cc: Thorne Gregory; Melanie Bethea
Subject: RE: X2 - Enthalpy POs 3049 and 3050 Submission

Craig-

We are checking to see if we have another 200cc/min flow controller. I will be in touch soon.

Please take a moment to provide customer feedback.

<image001.png>

Ashley Miller
Senior Project Manager
Enthalpy Analytical, LLC
800 Capitola Drive, Suite 1
Durham, NC 27713
(919) 850-4392
ashley.miller@enthalpy.com
www.enthalpy.com

Terms and Conditions
Enthalpy Sample Acceptance Policy
SSAS Laboratory ID: L0036, L0149 (metals only)

From: Craig Williams <CWilliams@css-inc.com>
Sent: Tuesday, April 16, 2019 11:49 AM
To: Bryan Tyler <bryan.tyler@enthalpy.com>; Long, Thomas <Long.Thomas@epa.gov>
Cc: Thorne Gregory <thorne.gregory@enthalpy.com>; Melanie Bethea <melanie.bethea@enthalpy.com>; Ashley Miller <ashley.miller@enthalpy.com>
Subject: RE: X2 - Enthalpy POs 3049 and 3050 Submission

Bryan,
Tom says that he's short an orifice for the spiked can. Please send a 1377 sec/180 flow for the spiked can today.

Craig Williams
Senior Engineer
Contractor to the USEPA
CSS (Jacobs Teammate)
1910 Sedwick Road
Durham, NC 27713
Office Phone: (919) 541-0336
www.css-inc.com

From: Craig Williams
Sent: Tuesday, April 16, 2019 8:44 AM
To: Bryan Tyler; Long, Thomas

Cc: Thorne Gregory; Melanie Bethea; Ashley Miller
Subject: RE: X2 - Enthalpy POs 3049 and 3050 Submission

Hi Bryan,
I talked to Tom this morning and the answer from Jacobs and EPA is yes, running the samples after all have been received by Enthalpy is OK.

Thanks.

Craig Williams
Senior Engineer
Contractor to the USEPA
CSS (Jacobs Teammate)
1910 Sedwick Road
Durham, NC 27713
Office Phone: (919) 541-0336
www.css-inc.com

From: Bryan Tyler [bryan.tyler@enthalpy.com]
Sent: Monday, April 15, 2019 4:04 PM
To: Craig Williams; Long, Thomas
Cc: Thorne Gregory; Melanie Bethea; Ashley Miller
Subject: RE: X2 - Enthalpy POs 3049 and 3050 Submission

Hi All,
We will not run the samples until they are all received...with this schedule sample analysis will commence on 4/22.

Does this work for Jacobs/EPA?

Please take a moment to provide customer feedback.

<image001.png>

Bryan Tyler
Vice President
Enthalpy Analytical, LLC
800 Capitola Drive, Suite 1
Durham, NC 27713
(919) 850-4392
bryan.tyler@enthalpy.com
www.enthalpy.com

Terms and Conditions
Enthalpy Sample Acceptance Policy

SSAS Laboratory ID: L0036, L0149 (metals only)

From: Craig Williams <CWilliams@css-inc.com>
Sent: Monday, April 15, 2019 3:59 PM
To: Long, Thomas <Long.Thomas@epa.gov>; Bryan Tyler <bryan.tyler@enthalpy.com>
Cc: Thorne Gregory <thorne.gregory@enthalpy.com>; Melanie Bethea <melanie.bethea@enthalpy.com>; Ashley Miller <ashley.miller@enthalpy.com>
Subject: RE: X2 - Enthalpy POs 3049 and 3050 Submission

Hi Tom,
Enthalpy is only 5 minutes away. I think Jacobs can arrange for someone to drive the samples over tomorrow. Are you proposing taking them all at the end of the day or more frequent?

Craig Williams
Senior Engineer
Contractor to the USEPA
CSS (Jacobs Teammate)
1910 Sedwick Road
Durham, NC 27713
Office Phone: (919) 541-0336
www.css-inc.com

From: Long, Thomas [Long.Thomas@epa.gov]
Sent: Monday, April 15, 2019 3:14 PM
To: Craig Williams; Bryan Tyler
Cc: Thorne Gregory; Melanie Bethea; Ashley Miller
Subject: RE: X2 - Enthalpy POs 3049 and 3050 Submission

When we do cans in-house we generally try to run them within two hours or at least the same day as acrolein concentrations change pretty rapidly. The same day would be my preference.

_____

Thomas Long, Mechanical Engineer
Mail Drop E343-02
Building D Room 360
109 T. W. Alexander Drive
Research Triangle Park, NC 27711
Phone: 919-541-3944

From: Craig Williams <CWilliams@css-inc.com>
Sent: Monday, April 15, 2019 3:06 PM
To: Bryan Tyler <bryan.tyler@enthalpy.com>
Cc: Thorne Gregory <thorne.gregory@enthalpy.com>; Melanie Bethea <melanie.bethea@enthalpy.com>; Ashley Miller <ashley.miller@enthalpy.com>; Long, Thomas <Long.Thomas@epa.gov>
Subject: RE: X2 - Enthalpy POs 3049 and 3050 Submission

Hi Bryan,
What is the maximum hold time for the cans after sampling before analysis? Can we return all cans at the same time on Friday?

Tom,
Would this be acceptable?

If this is acceptable Jacobs can deliver the cans to Enthalpy.

Thanks

Craig Williams
Senior Engineer
Contractor to the USEPA
CSS (Jacobs Teammate)
1910 Sedwick Road
Durham, NC 27713
Office Phone: (919) 541-0336
www.css-inc.com

From: Bryan Tyler [bryan.tyler@enthalpy.com]
Sent: Friday, April 12, 2019 3:56 PM
To: Craig Williams
Cc: Thorne Gregory; Melanie Bethea; Ashley Miller; Long, Thomas
Subject: FW: X2 - Enthalpy POs 3049 and 3050 Submission

Hi Craig,
The below supplies will be ready for 2pm delivery on Monday.
- 8 x 6L Silco canisters individually blank checked
- 3 x Soil Gas Samplers @ ~200 cc/min
- 1 x Soil Gas Samplers @ ~650 cc/min

The below supplies will be ready for 2pm delivery on Tuesday.
- 8 x 6L Silco canisters individually blank checked

Durations from Tom Long:
- 1 can – 505 seconds (use the 650 cc/min controller)
- 1 can – 1377 seconds (use the 200 cc/min controller)
- 2 cans – 505 (ambient) (use the 650 cc/min controller)

Please take a moment to provide customer feedback.

<image001.png>

Bryan Tyler
Vice President
Enthalpy Analytical, LLC
800 Capitola Drive, Suite 1
Durham, NC 27713
(919) 850-4392
bryan.tyler@enthalpy.com
www.enthalpy.com

Terms and Conditions
Enthalpy Sample Acceptance Policy

SSAS Laboratory ID: L0036, L0149 (metals only)

From: Whicker, Crystal <Crystal.whicker@jacobs.com>
Sent: Thursday, April 11, 2019 3:13 PM
To: Bryan Tyler <bryan.tyler@enthalpy.com>
Cc: Williams, Craig <CWilliams@css-inc.com>
Subject: X2 - Enthalpy POs 3049 and 3050 Submission

Hello Bryan,

Find attached Jacobs Technology purchase orders EPATP0000003049 and EPATP0000003050.
Please confirm receipt via my email – crystal.whicker@jacobs.com.

Thank you,
Crystal Whicker
Procurement Administrator
Jacobs Technology

NOTICE - This communication may contain confidential and privileged information that is for the sole use of the intended recipient. Any viewing, copying or distribution of, or reliance on this message by unintended recipients is strictly prohibited. If you have received this message in error, please notify us immediately by replying to the message and deleting it from your computer.

CONFIDENTIALITY NOTICE: The contents of this email message and any attachments are intended solely for the addressee(s) and may contain confidential, proprietary and/or privileged information and may be legally protected from disclosure. If you are not the intended recipient of this message or their agent, or if this message has been addressed to you in error, please immediately alert the sender by reply email and then delete this message and any attachments and the reply from your system. If you are not the intended recipient, you are hereby notified that any disclosure, use, dissemination, copying, or storage of this message or its attachments is strictly prohibited.

NOTICE - This communication may contain confidential and privileged information that is for the sole use of the intended recipient. Any viewing, copying or distribution of, or reliance on this message by unintended recipients is strictly prohibited. If you have received this message in error, please notify us immediately by replying to the message and deleting it from your computer.

CONFIDENTIALITY NOTICE: The contents of this email message and any attachments are intended solely for the addressee(s) and may contain confidential, proprietary and/or privileged information and may be legally protected from disclosure. If you are not the intended recipient of this message or their agent, or if this message has been addressed to you in error, please immediately alert the sender by reply email and then delete this message and any attachments and the reply from your system. If you are not the intended recipient, you are hereby notified that any disclosure, use, dissemination, copying, or storage of this message or its attachments is strictly prohibited.

CONFIDENTIALITY NOTICE: The contents of this email message and any attachments are intended solely for the addressee(s) and may contain confidential, proprietary and/or privileged information and may be legally protected from disclosure. If you are not the intended recipient of this message or their agent, or if this message has been addressed to you in error, please immediately alert the sender by reply email and then delete this message and any attachments and the reply from your system. If you are not the intended recipient, you are hereby notified that any disclosure, use, dissemination, copying, or storage of this message or its attachments is strictly prohibited.

CONFIDENTIALITY NOTICE: The contents of this email message and any attachments are intended solely for the addressee(s) and may contain confidential, proprietary and/or privileged information and may be legally protected from disclosure. If you are not the intended recipient of this message or their agent, or if this message has been addressed to you in error, please immediately alert the sender by reply email and then delete this message and any attachments and the reply from your system. If you are not the intended recipient, you are hereby notified that any disclosure, use, dissemination, copying, or storage of this message or its attachments is strictly prohibited.

CONFIDENTIALITY NOTICE: The contents of this email message and any attachments are intended solely for the addressee(s) and may contain confidential, proprietary and/or privileged information and may be legally protected from disclosure. If you are not the intended recipient of this message or their agent, or if this message has been addressed to you in error, please immediately alert the sender by reply email and then delete this message and any attachments and the reply from your system. If you are not the intended recipient, you are hereby notified that any disclosure, use, dissemination, copying, or storage of this message or its attachments is strictly prohibited.

CONFIDENTIALITY NOTICE: The contents of this email message and any attachments are intended solely for the addressee(s) and may contain confidential, proprietary and/or privileged information and may be legally protected from disclosure. If you are

not the intended recipient of this message or their agent, or if this message has been addressed to you in error, please immediately alert the sender by reply email and then delete this message and any attachments and the reply from your system. If you are not the intended recipient, you are hereby notified that any disclosure, use, dissemination, copying, or storage of this message or its attachments is strictly prohibited.

CONFIDENTIALITY NOTICE: The contents of this email message and any attachments are intended solely for the addressee(s) and may contain confidential, proprietary and/or privileged information and may be legally protected from disclosure. If you are not the intended recipient of this message or their agent, or if this message has been addressed to you in error, please immediately alert the sender by reply email and then delete this message and any attachments and the reply from your system. If you are not the intended recipient, you are hereby notified that any disclosure, use, dissemination, copying, or storage of this message or its attachments is strictly prohibited.

CONFIDENTIALITY NOTICE: The contents of this email message and any attachments are intended solely for the addressee(s) and may contain confidential, proprietary and/or privileged information and may be legally protected from disclosure. If you are not the intended recipient of this message or their agent, or if this message has been addressed to you in error, please immediately alert the sender by reply email and then delete this message and any attachments and the reply from your system. If you are not the intended recipient, you are hereby notified that any disclosure, use, dissemination, copying, or storage of this message or its attachments is strictly prohibited.

CONFIDENTIALITY NOTICE: The contents of this email message and any attachments are intended solely for the addressee(s) and may contain confidential, proprietary and/or privileged information and may be legally protected from disclosure. If you are not the intended recipient of this message or their agent, or if this message has been addressed to you in error, please immediately alert the sender by reply email and then delete this message and any attachments and the reply from your system. If you are not the intended recipient, you are hereby notified that any disclosure, use, dissemination, copying, or storage of this message or its attachments is strictly prohibited.

CONFIDENTIALITY NOTICE: The contents of this email message and any attachments are intended solely for the addressee(s) and may contain confidential, proprietary and/or privileged information and may be legally protected from disclosure. If you are not the intended recipient of this message or their agent, or if this message has been addressed to you in error, please immediately alert the sender by reply email and then delete this message and any attachments and the reply from your system. If you are not the intended recipient, you are hereby notified that any disclosure, use, dissemination, copying, or storage of this message or its attachments is strictly prohibited.

CONFIDENTIALITY NOTICE: The contents of this email message and any attachments are intended solely for the addressee(s) and may contain confidential, proprietary and/or privileged information and may be legally protected from disclosure. If you are not the intended recipient of this message or their agent, or if this message has been addressed to you in error, please immediately alert the sender by reply email and then delete this message and any attachments and the reply from your system. If you are not the intended recipient, you are hereby notified that any disclosure, use, dissemination, copying, or storage of this message or its attachments is strictly prohibited.

CONFIDENTIALITY NOTICE: The contents of this email message and any attachments are intended solely for the addressee(s) and may contain confidential, proprietary and/or privileged information and may be legally protected from disclosure. If you are not the intended recipient of this message or their agent, or if this message has been addressed to you in error, please immediately alert the sender by reply email and then delete this message and any attachments and the reply from your system. If you are not the intended recipient, you are hereby notified that any disclosure, use, dissemination, copying, or storage of this message or its attachments is strictly prohibited.

Message

From: Bryan Tyler [bryan.tyler@enthalpy.com]
Sent: 4/18/2019 10:40:34 PM
To: Long, Thomas [Long.Thomas@epa.gov]; Thorne Gregory [thorne.gregory@enthalpy.com]
CC: Craig Williams [CWilliams@css-inc.com]; Snow, Richard [Snow.Richard@epa.gov]; Shores, Richard [Shores.Richard@epa.gov]
Subject: RE: Tour next week

Thank you for this clarification.

Please take a moment to provide customer feedback.

ENTHALPY ANALYTICAL

Bryan Tyler
Vice President
Enthalpy Analytical, LLC
800 Capitola Drive, Suite 1
Durham, NC 27713
(919) 850-4392
bryan.tyler@enthalpy.com
www.enthalpy.com

Terms and Conditions
Enthalpy Sample Acceptance Policy

SSAS Laboratory ID: L0036, L0149 (metals only)

From: Long, Thomas <Long.Thomas@epa.gov>
Sent: Thursday, April 18, 2019 2:44 PM
To: Bryan Tyler <bryan.tyler@enthalpy.com>; Thorne Gregory <thorne.gregory@enthalpy.com>
Cc: Craig Williams <CWilliams@css-inc.com>; Snow, Richard <Snow.Richard@epa.gov>; Shores, Richard <Shores.Richard@epa.gov>
Subject: Tour next week

Bryan and Thorne,

JACOBS plans to return your samples and controllers tomorrow. Can you provide an estimate of when we might see the Enthalpy report?

Also, I know we at the EPA are coming at you from a bunch of different perspectives and I hope that isn't too confusing in terms of who is doing what. You have an EPA team working on the development of EtO analytic methods touring your facility next week. Of course, they have a keen interest in our project and we have learned a lot from them. Thank you for working with my colleagues to advance EtO measurement methodology and with us to use existing methods to perform analyses using the current state-of-the-art approach. They have conferred with us on our study and there isn't anything that can't be discussed with them. But to be clear, they are not to provide you with any technical direction with regards to my project. If, in the course of your discussions with them, you do get a better idea of how to approach our

samples I will be all ears. However, no changes may be made without authorization from Craig Williams who will confer with me prior to that change being implemented. Hopefully, this will reduce the chances for confusion.

Thank you for working with us to develop a path forward. Please feel free to call Craig or myself if you have any questions.

_____

Thomas Long, Mechanical Engineer
Mail Drop E343-02
Building D Room 360
109 T. W. Alexander Drive
Research Triangle Park, NC 27711
Phone: 919-541-3944

CONFIDENTIALITY NOTICE: The contents of this email message and any attachments are intended solely for the addressee(s) and may contain confidential, proprietary and/or privileged information and may be legally protected from disclosure. If you are not the intended recipient of this message or their agent, or if this message has been addressed to you in error, please immediately alert the sender by reply email and then delete this message and any attachments and the reply from your system. If you are not the intended recipient, you are hereby notified that any disclosure, use, dissemination, copying, or storage of this message or its attachments is strictly prohibited.

Message

From: Bryan Tyler [bryan.tyler@enthalpy.com]
Sent: 5/14/2019 4:58:47 PM
To: Long, Thomas [Long.Thomas@epa.gov]; Craig Williams [CWilliams@css-inc.com]; Ashley Miller [ashley.miller@enthalpy.com]
CC: Thorne Gregory [thorne.gregory@enthalpy.com]; Melanie Bethea [melanie.bethea@enthalpy.com]
Subject: RE: X2 - Enthalpy POs 3049 and 3050 Submission
Attachments: 0419-093.pdf

Hi Everyone – attached is the final report. We were able to achieve ~/<100ppt reporting limits for ALL TO-15 and EO samples. Sorry for the delay, but at least we got more cans with lower results with this approach.

Please note results as are received and do NOT include any dilutions performed on the samples in advance of collection.

Please take a moment to provide customer feedback.

ENTHALPY ANALYTICAL

Bryan Tyler
Vice President
Enthalpy Analytical, LLC
800 Capitola Drive, Suite 1
Durham, NC 27713
(919) 850-4392
bryan.tyler@enthalpy.com
www.enthalpy.com

Terms and Conditions
Enthalpy Sample Acceptance Policy

SSAS Laboratory ID: L0036, L0149 (metals only)

From: Long, Thomas <Long.Thomas@epa.gov>
Sent: Tuesday, May 7, 2019 8:30 AM
To: Bryan Tyler <bryan.tyler@enthalpy.com>; Craig Williams <CWilliams@css-inc.com>; Ashley Miller <ashley.miller@enthalpy.com>
Cc: Thorne Gregory <thorne.gregory@enthalpy.com>; Melanie Bethea <melanie.bethea@enthalpy.com>
Subject: RE: X2 - Enthalpy POs 3049 and 3050 Submission

Based on your TO-15 results, you should have identified the six cans you will drill down on. Would you mind sending me the list of can numbers for that? Thanks.

Thomas Long, Mechanical Engineer
Mail Drop E343-02
Building D Room 360
109 T. W. Alexander Drive

Research Triangle Park, NC 27711
Phone: 919-541-3944

From: Bryan Tyler <bryan.tyler@enthalpy.com>
Sent: Tuesday, May 07, 2019 5:38 AM
To: Craig Williams <CWilliams@css-inc.com>; Ashley Miller <ashley.miller@enthalpy.com>
Cc: Thorne Gregory <thorne.gregory@enthalpy.com>; Melanie Bethea <melanie.bethea@enthalpy.com>; Long, Thomas <Long.Thomas@epa.gov>
Subject: RE: X2 - Enthalpy POs 3049 and 3050 Submission

Craig,
We have the instrument manufacturer rep onsite today for maintenance and repairs...we hope these repairs allow us to start calibrating for Ethylene oxide early Wednesday morning.

The TO-15 analysis is complete, we were able to run it at ~1ppb (originally quoted at 10ppb)...we hope the same aggressive analyses can be done for Ethylene oxide which will yield as low of results as possible.

I will have an update for you mid-morning tomorrow. Again, thank you for your patience.

Best,
Bryan

Please take a moment to provide customer feedback.

ENTHALPY
ANALYTICAL

Bryan Tyler
Vice President
Enthalpy Analytical, LLC
800 Capitola Drive, Suite 1
Durham, NC 27713
(919) 850-4392
bryan.tyler@enthalpy.com
www.enthalpy.com

Terms and Conditions
Enthalpy Sample Acceptance Policy

SSAS Laboratory ID: L0036, L0149 (metals only)

From: Craig Williams <CWilliams@css-inc.com>
Sent: Friday, May 3, 2019 11:11 AM
To: Bryan Tyler <bryan.tyler@enthalpy.com>; Ashley Miller <ashley.miller@enthalpy.com>
Cc: Thorne Gregory <thorne.gregory@enthalpy.com>; Melanie Bethea <melanie.bethea@enthalpy.com>; Long, Thomas <Long.Thomas@epa.gov>
Subject: RE: X2 - Enthalpy POs 3049 and 3050 Submission

Bryan,
Please let us know how things progress.

Craig

Craig Williams
Senior Engineer
Contractor to the USEPA
CSS (Jacobs Teammate)
1910 Sedwick Road
Durham, NC 27713
Office Phone: (919) 541-0336
www.css-inc.com

From: Bryan Tyler [bryan.tyler@enthalpy.com]
Sent: Thursday, May 02, 2019 6:12 PM
To: Craig Williams; Ashley Miller
Cc: Thorne Gregory; Melanie Bethea; Long, Thomas
Subject: RE: X2 - Enthalpy POs 3049 and 3050 Submission

Craig,
This is my fault – sorry for the delay on my response. We are currently running the TO-15 analyses over the next 2 days and the Ethylene oxide analyses will run early next week. I am going to talk with our teams in the morning to get delivery times on this data.

I apologize this report is going to be late.

Bryan

Please take a moment to provide customer feedback.

ENTHALPY ANALYTICAL

Bryan Tyler
Vice President
Enthalpy Analytical, LLC
800 Capitola Drive, Suite 1
Durham, NC 27713
(919) 850-4392
bryan.tyler@enthalpy.com
www.enthalpy.com

Terms and Conditions
Enthalpy Sample Acceptance Policy

SSAS Laboratory ID: L0036, L0149 (metals only)

From: Craig Williams <CWilliams@css-inc.com>
Sent: Thursday, May 2, 2019 12:18 PM
To: Bryan Tyler <bryan.tyler@enthalpy.com>; Ashley Miller <ashley.miller@enthalpy.com>
Cc: Thorne Gregory <thorne.gregory@enthalpy.com>; Melanie Bethea <melanie.bethea@enthalpy.com>; Long, Thomas <Long.Thomas@epa.gov>
Subject: RE: X2 - Enthalpy POs 3049 and 3050 Submission

Hi Byran,

Can you please elaborate and provide an update by COB today?

Thanks,

Craig Williams
Senior Engineer
Contractor to the USEPA
CSS (Jacobs Teammate)
1910 Sedwick Road
Durham, NC 27713
Office Phone: (919) 541-0336
www.css-inc.com

From: Bryan Tyler [bryan.tyler@enthalpy.com]
Sent: Wednesday, May 01, 2019 2:55 PM
To: Craig Williams; Ashley Miller
Cc: Thorne Gregory; Melanie Bethea; Long, Thomas
Subject: RE: X2 - Enthalpy POs 3049 and 3050 Submission

Craig,
We have had some headwinds with this project – I will update you tonight/in the morning.

Bryan

Please take a moment to provide customer feedback.

ENTHALPY ANALYTICAL

Bryan Tyler
Vice President
Enthalpy Analytical, LLC
800 Capitola Drive, Suite 1
Durham, NC 27713
(919) 850-4392
bryan.tyler@enthalpy.com
www.enthalpy.com

Terms and Conditions
Enthalpy Sample Acceptance Policy

SSAS Laboratory ID: L0036, L0149 (metals only)

From: Craig Williams <CWilliams@css-inc.com>
Sent: Wednesday, May 1, 2019 10:03 AM
To: Bryan Tyler <bryan.tyler@enthalpy.com>; Ashley Miller <ashley.miller@enthalpy.com>
Cc: Thorne Gregory <thorne.gregory@enthalpy.com>; Melanie Bethea <melanie.bethea@enthalpy.com>; Long, Thomas <Long.Thomas@epa.gov>
Subject: RE: X2 - Enthalpy POs 3049 and 3050 Submission

Hi Bryan,
Just checking if all is going OK and on schedule.

Thanks

Craig Williams
Senior Engineer
Contractor to the USEPA
CSS (Jacobs Teammate)
1910 Sedwick Road
Durham, NC 27713
Office Phone: (919) 541-0336
www.css-inc.com

From: Bryan Tyler [bryan.tyler@enthalpy.com]
Sent: Tuesday, April 23, 2019 12:46 PM
To: Craig Williams; Ashley Miller
Cc: Thorne Gregory; Melanie Bethea; Long, Thomas
Subject: RE: X2 - Enthalpy POs 3049 and 3050 Submission

Samples have been received and are logged into the lab. Sample analysis will start later (keep in mind there are 4 separate analyses required) this week into next, final reports should be to you by COB next Friday 5/3.

Thanks,
Bryan

Please take a moment to provide customer feedback.

ENTHALPY ANALYTICAL

Bryan Tyler
Vice President
Enthalpy Analytical, LLC
800 Capitola Drive, Suite 1
Durham, NC 27713
(919) 850-4392
bryan.tyler@enthalpy.com
www.enthalpy.com

Terms and Conditions
Enthalpy Sample Acceptance Policy

SSAS Laboratory ID: L0036, L0149 (metals only)

From: Craig Williams <CWilliams@css-inc.com>
Sent: Tuesday, April 23, 2019 12:43 PM
To: Ashley Miller <ashley.miller@enthalpy.com>; Bryan Tyler <bryan.tyler@enthalpy.com>
Cc: Thorne Gregory <thorne.gregory@enthalpy.com>; Melanie Bethea <melanie.bethea@enthalpy.com>; Long, Thomas <Long.Thomas@epa.gov>
Subject: RE: X2 - Enthalpy POs 3049 and 3050 Submission

Hi Bryan and Ashley,
Can you please provide an update on the TO-15, EPA Method 3C, and EtO analysis and an estimate of when you will provide the results?

Thanks,

Craig Williams
Senior Engineer
Contractor to the USEPA
CSS (Jacobs Teammate)
1910 Sedwick Road
Durham, NC 27713
Office Phone: (919) 541-0336
www.css-inc.com

From: Ashley Miller [ashley.miller@enthalpy.com]
Sent: Wednesday, April 17, 2019 3:39 PM
To: Craig Williams; Melanie Bethea; Long, Thomas
Cc: Bryan Tyler; Thorne Gregory
Subject: RE: X2 - Enthalpy POs 3049 and 3050 Submission

Craig-

That will work fine. We can hold them until the rest arrive.

Please take a moment to provide customer feedback.

ENTHALPY ANALYTICAL

Ashley Miller
Senior Project Manager
Enthalpy Analytical, LLC
800 Capitola Drive, Suite 1
Durham, NC 27713
(919) 850-4392
ashley.miller@enthalpy.com
www.enthalpy.com

Terms and Conditions
Enthalpy Sample Acceptance Policy
SSAS Laboratory ID: L0036, L0149 (metals only)

From: Craig Williams <CWilliams@css-inc.com>
Sent: Wednesday, April 17, 2019 3:33 PM
To: Ashley Miller <ashley.miller@enthalpy.com>; Melanie Bethea <melanie.bethea@enthalpy.com>; Long, Thomas <Long.Thomas@epa.gov>
Cc: Bryan Tyler <bryan.tyler@enthalpy.com>; Thorne Gregory <thorne.gregory@enthalpy.com>
Subject: RE: X2 - Enthalpy POs 3049 and 3050 Submission

Daniel may bring a couple boxes of SUMMA cans with chain of custody forms when he picks up the controller. Is this OK? We'd bring the remaining cans over on Friday.

Craig Williams
Senior Engineer
Contractor to the USEPA
CSS (Jacobs Teammate)

1910 Sedwick Road
Durham, NC 27713
Office Phone: (919) 541-0336
www.css-inc.com

From: Ashley Miller [ashley.miller@enthalpy.com]
Sent: Wednesday, April 17, 2019 3:17 PM
To: Craig Williams; Melanie Bethea; Long, Thomas
Cc: Bryan Tyler; Thorne Gregory
Subject: RE: X2 - Enthalpy POs 3049 and 3050 Submission

Hi Craig-

Yes I will be here. I will plan to see him tomorrow. Thanks!

Please take a moment to provide customer feedback.

ENTHALPY ANALYTICAL

Ashley Miller
Senior Project Manager
Enthalpy Analytical, LLC
800 Capitola Drive, Suite 1
Durham, NC 27713
(919) 850-4392
ashley.miller@enthalpy.com
www.enthalpy.com

Terms and Conditions
Enthalpy Sample Acceptance Policy
SSAS Laboratory ID: L0036, L0149 (metals only)

From: Craig Williams <CWilliams@css-inc.com>
Sent: Wednesday, April 17, 2019 3:15 PM
To: Ashley Miller <ashley.miller@enthalpy.com>; Melanie Bethea <melanie.bethea@enthalpy.com>; Long, Thomas <Long.Thomas@epa.gov>
Cc: Bryan Tyler <bryan.tyler@enthalpy.com>; Thorne Gregory <thorne.gregory@enthalpy.com>
Subject: RE: X2 - Enthalpy POs 3049 and 3050 Submission

Will you be there as the contact person?

Craig

Craig Williams
Senior Engineer
Contractor to the USEPA
CSS (Jacobs Teammate)
1910 Sedwick Road
Durham, NC 27713
Office Phone: (919) 541-0336
www.css-inc.com

From: Craig Williams
Sent: Wednesday, April 17, 2019 3:13 PM

To: Ashley Miller; Melanie Bethea; Long, Thomas
Cc: Bryan Tyler; Thorne Gregory
Subject: RE: X2 - Enthalpy POs 3049 and 3050 Submission

Ashley,
Daniel Janek from Jacobs will pick up the controller and plans to be there at 8:00.

Craig

Craig Williams
Senior Engineer
Contractor to the USEPA
CSS (Jacobs Teammate)
1910 Sedwick Road
Durham, NC 27713
Office Phone: (919) 541-0336
www.css-inc.com

From: Ashley Miller [ashley.miller@enthalpy.com]
Sent: Wednesday, April 17, 2019 2:53 PM
To: Craig Williams; Melanie Bethea; Long, Thomas
Cc: Bryan Tyler; Thorne Gregory
Subject: RE: X2 - Enthalpy POs 3049 and 3050 Submission

Craig-

Yes anytime after 8 am will work fine. Thanks!

Please take a moment to provide customer feedback.

ENTHALPY ANALYTICAL

Ashley Miller
Senior Project Manager
Enthalpy Analytical, LLC
800 Capitola Drive, Suite 1
Durham, NC 27713
(919) 850-4392
ashley.miller@enthalpy.com
www.enthalpy.com

Terms and Conditions
Enthalpy Sample Acceptance Policy
SSAS Laboratory ID: L0036, L0149 (metals only)

From: Craig Williams <CWilliams@css-inc.com>
Sent: Wednesday, April 17, 2019 2:49 PM
To: Ashley Miller <ashley.miller@enthalpy.com>; Melanie Bethea <melanie.bethea@enthalpy.com>; Long, Thomas <Long.Thomas@epa.gov>
Cc: Bryan Tyler <bryan.tyler@enthalpy.com>; Thorne Gregory <thorne.gregory@enthalpy.com>
Subject: RE: X2 - Enthalpy POs 3049 and 3050 Submission

Yes, understood. The controller will not have been blank checked. Is it OK to send someone over early tomorrow morning?

Craig Williams
Senior Engineer
Contractor to the USEPA
CSS (Jacobs Teammate)
1910 Sedwick Road
Durham, NC 27713
Office Phone: (919) 541-0336
www.css-inc.com

From: Ashley Miller [ashley.miller@enthalpy.com]
Sent: Wednesday, April 17, 2019 2:45 PM
To: Craig Williams; Melanie Bethea; Long, Thomas
Cc: Bryan Tyler; Thorne Gregory
Subject: RE: X2 - Enthalpy POs 3049 and 3050 Submission

Hi Craig-

Just to confirm, the controller will not be blank-checked via GC/MS. It has been purging for quite some time so there is no reason to think there would be contamination, but just wanted to clarify that we will not have the instrument back up and running to be able to blank check prior to pickup.

Please take a moment to provide customer feedback.

ENTHALPY ANALYTICAL

Ashley Miller
Senior Project Manager
Enthalpy Analytical, LLC
800 Capitola Drive, Suite 1
Durham, NC 27713
(919) 850-4392
ashley.miller@enthalpy.com
www.enthalpy.com

Terms and Conditions
Enthalpy Sample Acceptance Policy
SSAS Laboratory ID: L0036, L0149 (metals only)

From: Craig Williams <CWilliams@css-inc.com>
Sent: Wednesday, April 17, 2019 12:49 PM
To: Melanie Bethea <melanie.bethea@enthalpy.com>; Ashley Miller <ashley.miller@enthalpy.com>; Long, Thomas <Long.Thomas@epa.gov>
Cc: Bryan Tyler <bryan.tyler@enthalpy.com>; Thorne Gregory <thorne.gregory@enthalpy.com>
Subject: RE: X2 - Enthalpy POs 3049 and 3050 Submission

Hi Melanie,
We can send someone over first thing tomorrow morning to pick up the controller. Is that OK? What time will it be available?

Craig Williams
Senior Engineer
Contractor to the USEPA

CSS (Jacobs Teammate)
1910 Sedwick Road
Durham, NC 27713
Office Phone: (919) 541-0336
www.css-inc.com

From: Melanie Bethea [melanie.bethea@enthalpy.com]
Sent: Wednesday, April 17, 2019 11:12 AM
To: Ashley Miller; Craig Williams; Long, Thomas
Cc: Bryan Tyler; Thorne Gregory
Subject: RE: X2 - Enthalpy POs 3049 and 3050 Submission

Good Morning,

The requested controller has been purging with nitrogen for 18+ hours. We will not be able to blank check the controller today as the instruments is still coming on line.

Please let us know how you would like to proceed.

Thank you,
Melanie

Please take a moment to provide customer feedback.

ENTHALPY
ANALYTICAL

Melanie Bethea
Operations Manager
Enthalpy Analytical, LLC
800 Capitola Drive, Suite 1
Durham, NC 27713
(919) 850.4392
melanie.bethea@enthalpy.com
www.enthalpy.com

Terms and Conditions
Enthalpy Sample Acceptance Policy

SSAS Laboratory ID: L0036, L0149 (metals only)

From: Ashley Miller <ashley.miller@enthalpy.com>
Sent: Tuesday, April 16, 2019 2:37 PM
To: Craig Williams <CWilliams@css-inc.com>; Long, Thomas <Long.Thomas@epa.gov>
Cc: Bryan Tyler <bryan.tyler@enthalpy.com>; Thorne Gregory <thorne.gregory@enthalpy.com>; Melanie Bethea <melanie.bethea@enthalpy.com>
Subject: RE: X2 - Enthalpy POs 3049 and 3050 Submission

Understood. If things improve I will reach out. Thanks for your patience!

Please take a moment to provide customer feedback.

ENTHALPY ANALYTICAL

Ashley Miller
Senior Project Manager
Enthalpy Analytical, LLC
800 Capitola Drive, Suite 1
Durham, NC 27713
(919) 850-4392
ashley.miller@enthalpy.com
www.enthalpy.com

Terms and Conditions
Enthalpy Sample Acceptance Policy
SSAS Laboratory ID: L0036, L0149 (metals only)

From: Craig Williams <CWilliams@css-inc.com>
Sent: Tuesday, April 16, 2019 2:35 PM
To: Ashley Miller <ashley.miller@enthalpy.com>; Long, Thomas <Long.Thomas@epa.gov>
Cc: Bryan Tyler <bryan.tyler@enthalpy.com>; Thorne Gregory <thorne.gregory@enthalpy.com>; Melanie Bethea <melanie.bethea@enthalpy.com>
Subject: RE: X2 - Enthalpy POs 3049 and 3050 Submission

Hi Ashley,
I would like to hold off in the hopes that your instrument is back up and running tomorrow. I'll check back around 2:00 tomorrow.

I appreciate your effort.

Thanks,

Craig Williams
Senior Engineer
Contractor to the USEPA
CSS (Jacobs Teammate)
1910 Sedwick Road
Durham, NC 27713
Office Phone: (919) 541-0336
www.css-inc.com

From: Ashley Miller [ashley.miller@enthalpy.com]
Sent: Tuesday, April 16, 2019 2:15 PM
To: Craig Williams; Long, Thomas
Cc: Bryan Tyler; Thorne Gregory; Melanie Bethea
Subject: RE: X2 - Enthalpy POs 3049 and 3050 Submission

Hi Craig and Thomas-

Sorry to deliver sad news, but our instrument is down and will not be back up before tomorrow. Please let me know if you would like the additional controller, or if you would like to wait until we get the instrument back up and can blank check it. Please note, I can't guarantee we will be back up and running by any certain time tomorrow.

Sorry for the bad news. Let me know how to proceed. Thanks!

Please take a moment to provide customer feedback.

ENTHALPY ANALYTICAL

Ashley Miller
Senior Project Manager
Enthalpy Analytical, LLC
800 Capitola Drive, Suite 1
Durham, NC 27713
(919) 850-4392
ashley.miller@enthalpy.com
www.enthalpy.com

Terms and Conditions
Enthalpy Sample Acceptance Policy
SSAS Laboratory ID: L0036, L0149 (metals only)

From: Craig Williams <CWilliams@css-inc.com>
Sent: Tuesday, April 16, 2019 1:03 PM
To: Long, Thomas <Long.Thomas@epa.gov>
Cc: Ashley Miller <ashley.miller@enthalpy.com>; Bryan Tyler <bryan.tyler@enthalpy.com>; Thorne Gregory <thorne.gregory@enthalpy.com>; Melanie Bethea <melanie.bethea@enthalpy.com>
Subject: Re: X2 - Enthalpy POs 3049 and 3050 Submission

Hi Ashley,
Thanks. It's important for us that it's blank checked. I can pick it up in the morning if you're able to have it ready and blank checked. Please let me know.

Thanks

Sent from my iPhone

On Apr 16, 2019, at 12:56 PM, Long, Thomas <Long.Thomas@epa.gov> wrote:

If we sent someone over at 8 am tomorrow to pick it up could we get one that had been blank checked?

_____
Thomas Long, Mechanical Engineer
Mail Drop E343-02
Building D Room 360
109 T. W. Alexander Drive
Research Triangle Park, NC 27711
Phone: 919-541-3944

From: Ashley Miller <ashley.miller@enthalpy.com>
Sent: Tuesday, April 16, 2019 12:51 PM
To: Craig Williams <CWilliams@css-inc.com>; Bryan Tyler <bryan.tyler@enthalpy.com>; Long, Thomas <Long.Thomas@epa.gov>
Cc: Thorne Gregory <thorne.gregory@enthalpy.com>; Melanie Bethea <melanie.bethea@enthalpy.com>
Subject: RE: X2 - Enthalpy POs 3049 and 3050 Submission

Hi Craig-

We can build another flow controller, but we will not be able to blank check it. If you guys are ok with using a flow controller that has not been blank-checked then I can have it over to you with the rest of the equipment this afternoon. It is very unlikely that this would result in any sort of contamination, and we are confident that the flow controller would be usable without concern as-is.

Let me know if this is acceptable, and I'll have it to you today. Thanks!

Please take a moment to provide customer feedback.

<image001.png>

Ashley Miller
Senior Project Manager
Enthalpy Analytical, LLC
800 Capitola Drive, Suite 1
Durham, NC 27713
(919) 850-4392
ashley.miller@enthalpy.com
www.enthalpy.com

Terms and Conditions
Enthalpy Sample Acceptance Policy
SSAS Laboratory ID: L0036, L0149 (metals only)

From: Craig Williams <CWilliams@css-inc.com>
Sent: Tuesday, April 16, 2019 12:28 PM
To: Ashley Miller <ashley.miller@enthalpy.com>; Bryan Tyler <bryan.tyler@enthalpy.com>; Long, Thomas <Long.Thomas@epa.gov>
Cc: Thorne Gregory <thorne.gregory@enthalpy.com>; Melanie Bethea <melanie.bethea@enthalpy.com>
Subject: RE: X2 - Enthalpy POs 3049 and 3050 Submission

Hi Ashley,
Thank you very much. Please let me know if it will be coming with the cans that Enthalpy's delivering today.

Craig

Craig Williams
Senior Engineer
Contractor to the USEPA
CSS (Jacobs Teammate)
1910 Sedwick Road
Durham, NC 27713
Office Phone: (919) 541-0336
www.css-inc.com

From: Ashley Miller [ashley.miller@enthalpy.com]
Sent: Tuesday, April 16, 2019 12:00 PM
To: Craig Williams; Bryan Tyler; Long, Thomas
Cc: Thorne Gregory; Melanie Bethea
Subject: RE: X2 - Enthalpy POs 3049 and 3050 Submission

Craig-

We are checking to see if we have another 200cc/min flow controller. I will be in touch soon.

Please take a moment to provide customer feedback.

<image001.png>

Ashley Miller
Senior Project Manager
Enthalpy Analytical, LLC
800 Capitola Drive, Suite 1
Durham, NC 27713
(919) 850-4392
ashley.miller@enthalpy.com
www.enthalpy.com

Terms and Conditions
Enthalpy Sample Acceptance Policy
SSAS Laboratory ID: L0036, L0149 (metals only)

From: Craig Williams <CWilliams@css-inc.com>
Sent: Tuesday, April 16, 2019 11:49 AM
To: Bryan Tyler <bryan.tyler@enthalpy.com>; Long, Thomas <Long.Thomas@epa.gov>
Cc: Thorne Gregory <thorne.gregory@enthalpy.com>; Melanie Bethea <melanie.bethea@enthalpy.com>; Ashley Miller <ashley.miller@enthalpy.com>
Subject: RE: X2 - Enthalpy POs 3049 and 3050 Submission

Bryan,
Tom says that he's short an orifice for the spiked can. Please send a 1377 sec/180 flow for the spiked can today.

Craig Williams
Senior Engineer
Contractor to the USEPA
CSS (Jacobs Teammate)
1910 Sedwick Road
Durham, NC 27713
Office Phone: (919) 541-0336
www.css-inc.com

From: Craig Williams
Sent: Tuesday, April 16, 2019 8:44 AM
To: Bryan Tyler; Long, Thomas
Cc: Thorne Gregory; Melanie Bethea; Ashley Miller
Subject: RE: X2 - Enthalpy POs 3049 and 3050 Submission

Hi Bryan,
I talked to Tom this morning and the answer from Jacobs and EPA is yes, running the samples after all have been received by Enthalpy is OK.

Thanks.

Craig Williams
Senior Engineer
Contractor to the USEPA
CSS (Jacobs Teammate)

1910 Sedwick Road
Durham, NC 27713
Office Phone: (919) 541-0336
www.css-inc.com

From: Bryan Tyler [bryan.tyler@enthalpy.com]
Sent: Monday, April 15, 2019 4:04 PM
To: Craig Williams; Long, Thomas
Cc: Thorne Gregory; Melanie Bethea; Ashley Miller
Subject: RE: X2 - Enthalpy POs 3049 and 3050 Submission

Hi All,
We will not run the samples until they are all received...with this schedule sample analysis will commence on 4/22.

Does this work for Jacobs/EPA?

Please take a moment to provide customer feedback.

<image001.png>

Bryan Tyler
Vice President
Enthalpy Analytical, LLC
800 Capitola Drive, Suite 1
Durham, NC 27713
(919) 850-4392
bryan.tyler@enthalpy.com
www.enthalpy.com

Terms and Conditions
Enthalpy Sample Acceptance Policy

SSAS Laboratory ID: L0036, L0149 (metals only)

From: Craig Williams <CWilliams@css-inc.com>
Sent: Monday, April 15, 2019 3:59 PM
To: Long, Thomas <Long.Thomas@epa.gov>; Bryan Tyler <bryan.tyler@enthalpy.com>
Cc: Thorne Gregory <thorne.gregory@enthalpy.com>; Melanie Bethea <melanie.bethea@enthalpy.com>; Ashley Miller <ashley.miller@enthalpy.com>
Subject: RE: X2 - Enthalpy POs 3049 and 3050 Submission

Hi Tom,
Enthalpy is only 5 minutes away. I think Jacobs can arrange for someone to drive the samples over tomorrow. Are you proposing taking them all at the end of the day or more frequent?

Craig Williams
Senior Engineer
Contractor to the USEPA
CSS (Jacobs Teammate)
1910 Sedwick Road
Durham, NC 27713
Office Phone: (919) 541-0336
www.css-inc.com

From: Long, Thomas [Long.Thomas@epa.gov]
Sent: Monday, April 15, 2019 3:14 PM
To: Craig Williams; Bryan Tyler
Cc: Thorne Gregory; Melanie Bethea; Ashley Miller
Subject: RE: X2 - Enthalpy POs 3049 and 3050 Submission

When we do cans in-house we generally try to run them within two hours or at least the same day as acrolein concentrations change pretty rapidly. The same day would be my preference.

_____
Thomas Long, Mechanical Engineer
Mail Drop E343-02
Building D Room 360
109 T. W. Alexander Drive
Research Triangle Park, NC 27711
Phone: 919-541-3944

From: Craig Williams <CWilliams@css-inc.com>
Sent: Monday, April 15, 2019 3:06 PM
To: Bryan Tyler <bryan.tyler@enthalpy.com>
Cc: Thorne Gregory <thorne.gregory@enthalpy.com>; Melanie Bethea <melanie.bethea@enthalpy.com>; Ashley Miller <ashley.miller@enthalpy.com>; Long, Thomas <Long.Thomas@epa.gov>
Subject: RE: X2 - Enthalpy POs 3049 and 3050 Submission

Hi Bryan,
What is the maximum hold time for the cans after sampling before analysis? Can we return all cans at the same time on Friday?

Tom,
Would this be acceptable?

If this is acceptable Jacobs can deliver the cans to Enthalpy.

Thanks

Craig Williams
Senior Engineer
Contractor to the USEPA
CSS (Jacobs Teammate)
1910 Sedwick Road
Durham, NC 27713
Office Phone: (919) 541-0336
www.css-inc.com

From: Bryan Tyler [bryan.tyler@enthalpy.com]
Sent: Friday, April 12, 2019 3:56 PM
To: Craig Williams
Cc: Thorne Gregory; Melanie Bethea; Ashley Miller; Long, Thomas
Subject: FW: X2 - Enthalpy POs 3049 and 3050 Submission

Hi Craig,
The below supplies will be ready for 2pm delivery on Monday.
- 8 x 6L Silco canisters individually blank checked
- 3 x Soil Gas Samplers @ ~200 cc/min
- 1 x Soil Gas Samplers @ ~650 cc/min

The below supplies will be ready for 2pm delivery on Tuesday.
- 8 x 6L Silco canisters individually blank checked

Durations from Tom Long:
- 1 can – 505 seconds (use the 650 cc/min controller)
- 1 can – 1377 seconds (use the 200 cc/min controller)
- 2 cans – 505 (ambient) (use the 650 cc/min controller)

Please take a moment to provide customer feedback.

<image001.png>

Bryan Tyler
Vice President
Enthalpy Analytical, LLC
800 Capitola Drive, Suite 1
Durham, NC 27713
(919) 850-4392
bryan.tyler@enthalpy.com
www.enthalpy.com

Terms and Conditions
Enthalpy Sample Acceptance Policy

SSAS Laboratory ID: L0036, L0149 (metals only)

From: Whicker, Crystal <Crystal.whicker@jacobs.com>
Sent: Thursday, April 11, 2019 3:13 PM
To: Bryan Tyler <bryan.tyler@enthalpy.com>
Cc: Williams, Craig <CWilliams@css-inc.com>
Subject: X2 - Enthalpy POs 3049 and 3050 Submission

Hello Bryan,

Find attached Jacobs Technology purchase orders EPATP0000003049 and EPATP0000003050.
Please confirm receipt via my email – crystal.whicker@jacobs.com.

Thank you,
Crystal Whicker
Procurement Administrator
Jacobs Technology

NOTICE - This communication may contain confidential and privileged information that is for the sole use of the intended recipient. Any viewing, copying or distribution of, or reliance on this message by unintended recipients is strictly prohibited. If you have received this message in error, please notify us immediately by replying to the message and deleting it from your computer.

CONFIDENTIALITY NOTICE: The contents of this email message and any attachments are intended solely for the addressee(s)

and may contain confidential, proprietary and/or privileged information and may be legally protected from disclosure. If you are not the intended recipient of this message or their agent, or if this message has been addressed to you in error, please immediately alert the sender by reply email and then delete this message and any attachments and the reply from your system. If you are not the intended recipient, you are hereby notified that any disclosure, use, dissemination, copying, or storage of this message or its attachments is strictly prohibited.

NOTICE - This communication may contain confidential and privileged information that is for the sole use of the intended recipient. Any viewing, copying or distribution of, or reliance on this message by unintended recipients is strictly prohibited. If you have received this message in error, please notify us immediately by replying to the message and deleting it from your computer.

CONFIDENTIALITY NOTICE: The contents of this email message and any attachments are intended solely for the addressee(s) and may contain confidential, proprietary and/or privileged information and may be legally protected from disclosure. If you are not the intended recipient of this message or their agent, or if this message has been addressed to you in error, please immediately alert the sender by reply email and then delete this message and any attachments and the reply from your system. If you are not the intended recipient, you are hereby notified that any disclosure, use, dissemination, copying, or storage of this message or its attachments is strictly prohibited.

CONFIDENTIALITY NOTICE: The contents of this email message and any attachments are intended solely for the addressee(s) and may contain confidential, proprietary and/or privileged information and may be legally protected from disclosure. If you are not the intended recipient of this message or their agent, or if this message has been addressed to you in error, please immediately alert the sender by reply email and then delete this message and any attachments and the reply from your system. If you are not the intended recipient, you are hereby notified that any disclosure, use, dissemination, copying, or storage of this message or its attachments is strictly prohibited.

CONFIDENTIALITY NOTICE: The contents of this email message and any attachments are intended solely for the addressee(s) and may contain confidential, proprietary and/or privileged information and may be legally protected from disclosure. If you are not the intended recipient of this message or their agent, or if this message has been addressed to you in error, please immediately alert the sender by reply email and then delete this message and any attachments and the reply from your system. If you are not the intended recipient, you are hereby notified that any disclosure, use, dissemination, copying, or storage of this message or its attachments is strictly prohibited.

CONFIDENTIALITY NOTICE: The contents of this email message and any attachments are intended solely for the addressee(s) and may contain confidential, proprietary and/or privileged information and may be legally protected from disclosure. If you are not the intended recipient of this message or their agent, or if this message has been addressed to you in error, please immediately alert the sender by reply email and then delete this message and any attachments and the reply from your system. If you are not the intended recipient, you are hereby notified that any disclosure, use, dissemination, copying, or storage of this message or its attachments is strictly prohibited.

CONFIDENTIALITY NOTICE: The contents of this email message and any attachments are intended solely for the addressee(s) and may contain confidential, proprietary and/or privileged information and may be legally protected from disclosure. If you are not the intended recipient of this message or their agent, or if this message has been addressed to you in error, please immediately alert the sender by reply email and then delete this message and any attachments and the reply from your system. If you are not the intended recipient, you are hereby notified that any disclosure, use, dissemination, copying, or storage of this message or its attachments is strictly prohibited.

CONFIDENTIALITY NOTICE: The contents of this email message and any attachments are intended solely for the addressee(s) and may contain confidential, proprietary and/or privileged information and may be legally protected from disclosure. If you are not the intended recipient of this message or their agent, or if this message has been addressed to you in error, please immediately alert the sender by reply email and then delete this message and any attachments and the reply from your system. If you are not the intended recipient, you are hereby notified that any disclosure, use, dissemination, copying, or storage of this message or its attachments is strictly prohibited.

CONFIDENTIALITY NOTICE: The contents of this email message and any attachments are intended solely for the addressee(s) and may contain confidential, proprietary and/or privileged information and may be legally protected from disclosure. If you are not the intended recipient of this message or their agent, or if this message has been addressed to you in error, please immediately alert the sender by reply email and then delete this message and any attachments and the reply from your system. If you are not the intended recipient, you are hereby notified that any disclosure, use, dissemination, copying, or storage of this message or its attachments is strictly prohibited.

CONFIDENTIALITY NOTICE: The contents of this email message and any attachments are intended solely for the addressee(s) and may contain confidential, proprietary and/or privileged information and may be legally protected from disclosure. If you are not the intended recipient of this message or their agent, or if this message has been addressed to you in error, please immediately alert the sender by reply email and then delete this message and any attachments and the reply from your system. If you are not the intended recipient, you are hereby notified that any disclosure, use, dissemination, copying, or storage of this message or its attachments is strictly prohibited.

CONFIDENTIALITY NOTICE: The contents of this email message and any attachments are intended solely for the addressee(s) and may contain confidential, proprietary and/or privileged information and may be legally protected from disclosure. If you are not the intended recipient of this message or their agent, or if this message has been addressed to you in error, please immediately alert the sender by reply email and then delete this message and any attachments and the reply from your system. If you are not the intended recipient, you are hereby notified that any disclosure, use, dissemination, copying, or storage of this message or its attachments is strictly prohibited.

CONFIDENTIALITY NOTICE: The contents of this email message and any attachments are intended solely for the addressee(s) and may contain confidential, proprietary and/or privileged information and may be legally protected from disclosure. If you are not the intended recipient of this message or their agent, or if this message has been addressed to you in error, please immediately alert the sender by reply email and then delete this message and any attachments and the reply from your system. If you are not the intended recipient, you are hereby notified that any disclosure, use, dissemination, copying, or storage of this message or its attachments is strictly prohibited.

CONFIDENTIALITY NOTICE: The contents of this email message and any attachments are intended solely for the addressee(s) and may contain confidential, proprietary and/or privileged information and may be legally protected from disclosure. If you are not the intended recipient of this message or their agent, or if this message has been addressed to you in error, please immediately alert the sender by reply email and then delete this message and any attachments and the reply from your system. If you are not the intended recipient, you are hereby notified that any disclosure, use, dissemination, copying, or storage of this message or its attachments is strictly prohibited.

CONFIDENTIALITY NOTICE: The contents of this email message and any attachments are intended solely for the addressee(s) and may contain confidential, proprietary and/or privileged information and may be legally protected from disclosure. If you are not the intended recipient of this message or their agent, or if this message has been addressed to you in error, please immediately alert the sender by reply email and then delete this message and any attachments and the reply from your system. If you are not the intended recipient, you are hereby notified that any disclosure, use, dissemination, copying, or storage of this message or its attachments is strictly prohibited.

CONFIDENTIALITY NOTICE: The contents of this email message and any attachments are intended solely for the addressee(s) and may contain confidential, proprietary and/or privileged information and may be legally protected from disclosure. If you are not the intended recipient of this message or their agent, or if this message has been addressed to you in error, please immediately alert the sender by reply email and then delete this message and any attachments and the reply from your system. If you are not the intended recipient, you are hereby notified that any disclosure, use, dissemination, copying, or storage of this message or its attachments is strictly prohibited.

CONFIDENTIALITY NOTICE: The contents of this email message and any attachments are intended solely for the addressee(s) and may contain confidential, proprietary and/or privileged information and may be legally protected from disclosure. If you are not the intended recipient of this message or their agent, or if this message has been addressed to you in error, please immediately alert the sender by reply email and then delete this message and any attachments and the reply from your system. If you are not the intended recipient, you are hereby notified that any disclosure, use, dissemination, copying, or storage of this message or its attachments is strictly prohibited.

CONFIDENTIALITY NOTICE: The contents of this email message and any attachments are intended solely for the addressee(s) and may contain confidential, proprietary and/or privileged information and may be legally protected from disclosure. If you are not the intended recipient of this message or their agent, or if this message has been addressed to you in error, please immediately alert the sender by reply email and then delete this message and any attachments and the reply from your system. If you are not the intended recipient, you are hereby notified that any disclosure, use, dissemination, copying, or storage of this message or its attachments is strictly prohibited.

CONFIDENTIALITY NOTICE: The contents of this email message and any attachments are intended solely for the addressee(s) and may contain confidential, proprietary and/or privileged information and may be legally protected from disclosure. If you are not the intended recipient of this message or their agent, or if this message has been addressed to you in error, please

immediately alert the sender by reply email and then delete this message and any attachments and the reply from your system. If you are not the intended recipient, you are hereby notified that any disclosure, use, dissemination, copying, or storage of this message or its attachments is strictly prohibited.

CONFIDENTIALITY NOTICE: The contents of this email message and any attachments are intended solely for the addressee(s) and may contain confidential, proprietary and/or privileged information and may be legally protected from disclosure. If you are not the intended recipient of this message or their agent, or if this message has been addressed to you in error, please immediately alert the sender by reply email and then delete this message and any attachments and the reply from your system. If you are not the intended recipient, you are hereby notified that any disclosure, use, dissemination, copying, or storage of this message or its attachments is strictly prohibited.

Message

From: Craig Williams [CWilliams@css-inc.com]
Sent: 9/20/2019 3:05:31 PM
To: Bryan Tyler [bryan.tyler@enthalpy.com]
CC: Long, Thomas [Long.Thomas@epa.gov]
Subject: Phase 4 results did not detect any EtO spikes

Hi Bryan,
The report didn't detect any EtO spikes and EPA would like to request that Enthalpy:

1. Analyze our bottle to determine if your process (including your choice of standard) somehow is not working in that it is blinding you to our EtO?
2. Analyze a "clean" spike
3. Provide the spiked cans back to us for in-house analysis. These cans include: 2031, 2034, 2052, 2072, 2075

Please let us know if you can help with these requests.

Thanks

Craig Williams
Engineer
CSS | Office: 919.541.0336 | www.css-inc.com
An employee-owned company
Contractor to the USEPA

Message

From: Thorne Gregory [thorne.gregory@enthalpy.com]
Sent: 8/5/2019 6:59:03 PM
To: Kariher, Peter [Kariher.Peter@epa.gov]; Bryan Tyler [bryan.tyler@enthalpy.com]; Long, Thomas [Long.Thomas@epa.gov]; Thorne Gregory [thorne.gregory@enthalpy.com]
CC: Craig Williams [CWilliams@css-inc.com]; Shores, Richard [Shores.Richard@epa.gov]; Nessley, Libby [Nessley.Libby@epa.gov]
Subject: RE: Analysis Report
Attachments: CC473222 (Ethylene Oxide 1ppm, in N2).pdf

Peter,

We are holding onto the Phase three samples in case there are answers that can be gained from canister re-analysis. I'll get started on researching some of these questions, but here is what I can answer off the top of my head.

- How are the calibration standards prepared?

Calibration standards are prepared by diluting a 1ppm standard from airgas (attached). The cylinder was made in February.

- You are using a 100 ppm EtO standard as the starting material from Airgas? How old is the standard? Are you seeing the standard degradation issue seen by others? Confirmed the concentration by FTIR?

Standard is about 6 months old by now. I have analyzed the 1ppm vs the 100ppm cylinder, and we got about 90% of what we expected. The 1ppm was below the calibrated range, but as a fast test with no evidence of a problem, it met the need. This is comparing an EO bottle against an older EO bottle, so there could be degradation concerns about all of it. I can analyze the cylinder by FTIR and we can see what we see. If there is EO degradation in bottles, the same questions would be raised about the reference material used to make the FTIR spectra. I will have to go through our library, but my memory is that our Ethylene oxide spectra a significantly higher than 1ppm.

Thorne Gregory
Enthalpy Analytical

From: Kariher, Peter [mailto:Kariher.Peter@epa.gov]
Sent: Monday, August 05, 2019 1:54 PM
To: 'Bryan Tyler'; Long, Thomas; Thorne Gregory
Cc: Craig Williams; Shores, Richard; Nessley, Libby
Subject: RE: Analysis Report

Bryan,

Thank you for looking at these questions. We would like to have a follow up meeting with you and our ORD chemists when you are ready to discuss these.

Questions/Concerns for Enthalpy Regarding Mobile Source EtO Testing:

- Can we verify that ethylene oxide was chromatographically resolved from acetaldehyde and other interferants in Phase 2?

  - Different oven programs were used for Phase 1, Phase 2, and "Optimization of EPA Method TO-15 for Analysis of ppt Levels of Ethylene Oxide in Ambient Air" presentation.

    - Phase 1 oven program was cryogenic, starting at -20 °C (EO-SIM.M). Here, ethylene oxide eluted at 11.3 min.

- Phase 2 oven program (TO15_rmp_EO.M) mimicked TO-15-Scan method (TO15-scn.M) and started at 45 °C. Ethylene oxide eluted at 5.6 min.
- AWMA presentation had the oven method starting at 10 °C. Ethylene oxide eluted at 7.5 min.
- The presentation was used to illustrate chromatographic separation of ethylene oxide from interferents, but without knowing the ramp profiles, we cannot draw conclusions from the results of the presentation and those of Phase 1/Phase 2. Compounds will elute at different times relative to one another under different ramp conditions.

- Of note: For Phase 1, ethylene oxide eluted when oven temperature was roughly 33 °C, however for Phase 2, ethylene oxide eluted when oven temperature was 45 °C.
  - In Phase 2 ethylene oxide was analyzed using the same oven profile as had been used to generate the TO-15 scan data and there seems to be an overlap between elution times for acetaldehyde and ethylene oxide.

Looking at Phase 1 TO-15 scan results (obtained with the method TO15-scn.M) we find that acetaldehyde eluted at 5.6 min, and although acetaldehyde was not presented in the calibration sequence for Phase 2 report, we can deduce (based on other compounds) that the retention time would be roughly 5.2 min. Therefore, under identical oven programs, acetaldehyde retention time varied between 5.2 and 5.6 minutes.

In Phase 2, ethylene oxide analysis was performed using the same oven program as TO-15 scan and was found to elute at 5.6 min. Because acetaldehyde and ethylene oxide both share the same 3 major ion fragments under EI (i.e. 44, 29, 15), SIM would not be useful in differentiating these compounds if they were coeluting.

  - Do we have information regarding the elution time of other interferents using this temperature program (e.g. trans-2-butene)?

- What factors might be contributing to fragmentation pattern observed for ethylene oxide?
  - The fragmentation pattern observed for standards and samples differs from ethylene oxide fragmentation pattern for reference spectra. Possible explanations for the discrepancy include low concentration, mass spec tuning, carbon dioxide, and background correction.

- Can we have scan data for the area in the proximity of ethylene oxide elution?
- Can we have information on pre-conc conditions?
- How are the calibration standards prepared?
- You are using a 100 ppm EtO standard as the starting material from Airgas? How old is the standard? Are you seeing the standard degradation issue seen by others? Confirmed the concentration by FTIR?
- Need a discussion on the mix up with the Can #2044 and Can #2088. The spike can was #2088, but in the data it is obvious which can was spiked since #2088 had 56.6 ppt and #2044 was 36500 ppt. This was a 5000 ppt spike.
- Ion 56 is showing up in some of the SIM data for EtO (also 31 and 43?) These ions were not in the 0219-074 report. Can you confirm which ion/ions are being used to quantify? We see a lot of 44 in the scan data for the TO-15. Is 29.1 the only SIM ion?

Thanks,

Peter

++++++++++++++++++++++++++++++++++++
Peter H. Kariher
Chemist
US EPA
Stationary Source Branch
Air & Energy Management Division
National Risk Management Research Laboratory
Office of Research and Development
(919) 541-5740
mailto:kariher.peter@epa.gov
++++++++++++++++++++++++++++++++++++

From: Bryan Tyler <bryan.tyler@enthalpy.com>
Sent: Monday, August 05, 2019 9:21 AM
To: Long, Thomas <Long.Thomas@epa.gov>; Thorne Gregory <thorne.gregory@enthalpy.com>
Cc: Craig Williams <CWilliams@css-inc.com>; Kariher, Peter <Kariher.Peter@epa.gov>; Shores, Richard <Shores.Richard@epa.gov>
Subject: RE: Analysis Report

Thomas – thank you for the heads up here. Please do forward those questions to us when possible.

Bryan Tyler
VP Environmental Laboratory Services
800-1 Capitola Dr., Durham, NC 27713
O: 919.850.4392 x12203 | M: 919.491.5145
bryan.tyler@enthalpy.com

To help protect the air we breathe, the water we drink, and the soil that feeds us.

Please take a moment to provide customer feedback
Terms and Conditions & Enthalpy Sample Acceptance Policy

From: Long, Thomas <Long.Thomas@epa.gov>
Sent: Monday, August 5, 2019 9:19 AM
To: Bryan Tyler <bryan.tyler@enthalpy.com>; Thorne Gregory <thorne.gregory@enthalpy.com>
Cc: Craig Williams <CWilliams@css-inc.com>; Kariher, Peter <Kariher.Peter@epa.gov>; Shores, Richard <Shores.Richard@epa.gov>
Subject: Analysis Report

Gentlemen,

The results reported for Phase 3 have been problematic for us. Our chemists have put together a number of questions which Peter will be sharing with you shortly. After you have had a chance to review the questions, we can talk about next steps. At this moment in time, I am halting testing as we attempt to work through these issues and come to a more clear path forward. Thank you for continuing to work with us to understand what we are seeing.

Thomas Long, Mechanical Engineer
Mail Drop E343-02
Building D Room 360
109 T. W. Alexander Drive

Research Triangle Park, NC 27711
Phone: 919-541-3944

CONFIDENTIALITY NOTICE: The contents of this email message and any attachments are intended solely for the addressee(s) and may contain confidential, proprietary and/or privileged information and may be legally protected from disclosure. If you are not the intended recipient of this message or their agent, or if this message has been addressed to you in error, please immediately alert the sender by reply email and then delete this message and any attachments and the reply from your system. If you are not the intended recipient, you are hereby notified that any disclosure, use, dissemination, copying, or storage of this message or its attachments is strictly prohibited.

CONFIDENTIALITY NOTICE: The contents of this email message and any attachments are intended solely for the addressee(s) and may contain confidential, proprietary and/or privileged information and may be legally protected from disclosure. If you are not the intended recipient of this message or their agent, or if this message has been addressed to you in error, please immediately alert the sender by reply email and then delete this message and any attachments and the reply from your system. If you are not the intended recipient, you are hereby notified that any disclosure, use, dissemination, copying, or storage of this message or its attachments is strictly prohibited.

Airgas
an Air Liquide company

Airgas Specialty Gases
Airgas USA, LLC
6141 Easton Road
Bldg 1
Plumsteadville, PA 18949
Airgas.com

CERTIFICATE OF ANALYSIS

Grade of Product: CERTIFIED STANDARD-SPEC

Customer:	MONTROSE ENVIRONMENTAL GROUP		
Part Number:	X02NI99C15AH650	Reference Number:	160-401425453-1
Cylinder Number:	CC473222	Cylinder Volume:	144.3 Cubic Feet
Laboratory:	124 - Plumsteadville - PA	Cylinder Pressure:	2015 PSIG
Analysis Date:	Feb 28, 2019	Valve Outlet:	350SS
Lot Number:	160-401425453-1		

Expiration Date: Feb 28, 2020

Product composition verified by direct comparison to calibration standards traceable to N.I.S.T. weights and/or N.I.S.T. Gas Mixture reference materials.

ANALYTICAL RESULTS

Component	Req Conc	Actual Concentration (Mole %)	Analytical Uncertainty
ETHYLENE OXIDE	1.000 PPM	1.009 PPM	+/- 5%
NITROGEN	Balance		

Approved for Release

Message

From: Kariher, Peter [Kariher.Peter@epa.gov]
Sent: 8/5/2019 5:54:28 PM
To: 'Bryan Tyler' [bryan.tyler@enthalpy.com]; Long, Thomas [Long.Thomas@epa.gov]; Thorne Gregory [thorne.gregory@enthalpy.com]
CC: Craig Williams [CWilliams@css-inc.com]; Shores, Richard [Shores.Richard@epa.gov]; Nessley, Libby [Nessley.Libby@epa.gov]
Subject: RE: Analysis Report

Bryan,

Thank you for looking at these questions. We would like to have a follow up meeting with you and our ORD chemists when you are ready to discuss these.

Questions/Concerns for Enthalpy Regarding Mobile Source EtO Testing:

- Can we verify that ethylene oxide was chromatographically resolved from acetaldehyde and other interferants in Phase 2?
  - Different oven programs were used for Phase 1, Phase 2, and "Optimization of EPA Method TO-15 for Analysis of ppt Levels of Ethylene Oxide in Ambient Air" presentation.
    - Phase 1 oven program was cryogenic, starting at -20 °C (EO-SIM.M). Here, ethylene oxide eluted at 11.3 min.
    - Phase 2 oven program (TO15_rmp_EO.M) mimicked TO-15-Scan method (TO15-scn.M) and started at 45 °C. Ethylene oxide eluted at 5.6 min.
    - AWMA presentation had the oven method starting at 10 °C. Ethylene oxide eluted at 7.5 min.
    - The presentation was used to illustrate chromatographic separation of ethylene oxide from interferents, but without knowing the ramp profiles, we cannot draw conclusions from the results of the presentation and those of Phase 1/Phase 2. Compounds will elute at different times relative to one another under different ramp conditions.
- Of note: For Phase 1, ethylene oxide eluted when oven temperature was roughly 33 °C, however for Phase 2, ethylene oxide eluted when oven temperature was 45 °C.
  - In Phase 2 ethylene oxide was analyzed using the same oven profile as had been used to generate the TO-15 scan data and there seems to be an overlap between elution times for acetaldehyde and ethylene oxide.

Looking at Phase 1 TO-15 scan results (obtained with the method TO15-scn.M) we find that acetaldehyde eluted at 5.6 min, and although acetaldehyde was not presented in the calibration sequence for Phase 2 report, we can deduce (based on other compounds) that the retention time would be roughly 5.2 min. Therefore, under identical oven programs, acetaldehyde retention time varied between 5.2 and 5.6 minutes.

In Phase 2, ethylene oxide analysis was performed using the same oven program as TO-15 scan and was found to elute at 5.6 min. Because acetaldehyde and ethylene oxide both share the same 3 major ion fragments under EI (i.e. 44, 29, 15), SIM would not be useful in differentiating these compounds if they were coeluting.

- Do we have information regarding the elution time of other interferents using this temperature program (e.g. trans-2-butene)?

- What factors might be contributing to fragmentation pattern observed for ethylene oxide?
  - The fragmentation pattern observed for standards and samples differs from ethylene oxide fragmentation pattern for reference spectra. Possible explanations for the discrepancy include low concentration, mass spec tuning, carbon dioxide, and background correction.

- Can we have scan data for the area in the proximity of ethylene oxide elution?
- Can we have information on pre-conc conditions?
- How are the calibration standards prepared?
- You are using a 100 ppm EtO standard as the starting material from Airgas? How old is the standard? Are you seeing the standard degradation issue seen by others? Confirmed the concentration by FTIR?
- Need a discussion on the mix up with the Can #2044 and Can #2088. The spike can was #2088, but in the data it is obvious which can was spiked since #2088 had 56.6 ppt and #2044 was 36500 ppt. This was a 5000 ppt spike.
- Ion 56 is showing up in some of the SIM data for EtO (also 31 and 43?) These ions were not in the 0219-074 report. Can you confirm which ion/ions are being used to quantify? We see a lot of 44 in the scan data for the TO-15. Is 29.1 the only SIM ion?

Thanks,

Peter

++++++++++++++++++++++++++++++++++++
Peter H. Kariher
Chemist
US EPA
Stationary Source Branch
Air & Energy Management Division
National Risk Management Research Laboratory
Office of Research and Development
(919) 541-5740
mailto:kariher.peter@epa.gov
++++++++++++++++++++++++++++++++++++

From: Bryan Tyler <bryan.tyler@enthalpy.com>
Sent: Monday, August 05, 2019 9:21 AM
To: Long, Thomas <Long.Thomas@epa.gov>; Thorne Gregory <thorne.gregory@enthalpy.com>
Cc: Craig Williams <CWilliams@css-inc.com>; Kariher, Peter <Kariher.Peter@epa.gov>; Shores, Richard <Shores.Richard@epa.gov>
Subject: RE: Analysis Report

Thomas – thank you for the heads up here. Please do forward those questions to us when possible.

Bryan Tyler
VP Environmental Laboratory Services
800-1 Capitola Dr., Durham, NC 27713
O: 919.850.4392 x12203 | M: 919.491.5145
bryan.tyler@enthalpy.com

To help protect the air we breathe, the water we drink, and the soil that feeds us.

Please take a moment to provide customer feedback
Terms and Conditions & Enthalpy Sample Acceptance Policy

From: Long, Thomas <Long.Thomas@epa.gov>
Sent: Monday, August 5, 2019 9:19 AM
To: Bryan Tyler <bryan.tyler@enthalpy.com>; Thorne Gregory <thorne.gregory@enthalpy.com>

Cc: Craig Williams <CWilliams@css-inc.com>; Kariher, Peter <Kariher.Peter@epa.gov>; Shores, Richard <Shores.Richard@epa.gov>
Subject: Analysis Report

Gentlemen,

The results reported for Phase 3 have been problematic for us. Our chemists have put together a number of questions which Peter will be sharing with you shortly. After you have had a chance to review the questions, we can talk about next steps. At this moment in time, I am halting testing as we attempt to work through these issues and come to a more clear path forward. Thank you for continuing to work with us to understand what we are seeing.

_____

Thomas Long, Mechanical Engineer
Mail Drop E343-02
Building D Room 360
109 T. W. Alexander Drive
Research Triangle Park, NC 27711
Phone: 919-541-3944

CONFIDENTIALITY NOTICE: The contents of this email message and any attachments are intended solely for the addressee(s) and may contain confidential, proprietary and/or privileged information and may be legally protected from disclosure. If you are not the intended recipient of this message or their agent, or if this message has been addressed to you in error, please immediately alert the sender by reply email and then delete this message and any attachments and the reply from your system. If you are not the intended recipient, you are hereby notified that any disclosure, use, dissemination, copying, or storage of this message or its attachments is strictly prohibited.

Message

From: Whitehill, Andrew [whitehill.andrew@epa.gov]
Sent: 8/1/2019 11:45:21 PM
To: Long, Thomas [Long.Thomas@epa.gov]
Subject: Ethylene Oxide (oxirane) emissions from incomplete combustion of ethanol-containing fuels

Hi Tom,

I am a postdoctoral Chemist in NERL who specializes in VOC measurements, especially carbonyls. I noticed in the AE StRAP planning that you are assessing EtO emissions from motor vehicles. Basic combustion chemistry suggests that oxirane, also known as ethylene oxide, is a common byproduct of incomplete ethanol combustion (as well as ethylene). Combustion studies seem to mostly confirm this. Incomplete combustion of ethanol-containing gasoline, such as during cold starts or in vehicles without effective catalytic converters (e.g. lawnmowers, etc.), is likely to be a substantial source of ethylene oxide emissions in urban areas. Although EtO is reactive, it is relatively thermally stable.

I am interested in Ethylene Oxide from the measurement side, as it is an ideal molecule for spectroscopic measurements in the infrared and microwave regions. It is also formed from many similar combustion reactions as the carbonyl compounds.

Best,
Andrew Whitehill

Mystery Compound	Enthalpy Can S/N	Enthalpy Flow Controller ID	EPA Sample ID	Sample Location	Sampling Tech	Date Sampled
ND	0718	048	113743-0718	Intake Air	D Janek	16-Apr-19
ND	0037	036	113743-0037	Dilution Air	T Long	16-Apr-19
ND	0728	004	113743-0728	Diluted Exhaust	R Logan	16-Apr-19
252	0098	015	113743-0098	Diluted Exhaust	R Logan	16-Apr-19
ND	0002	048	113744-0002	Intake Air	D Janek	17-Apr-19
ND	0087	036	113744-0087	Dilution Air	T Long	17-Apr-19
ND	0039	004	113744-0039	Diluted Exhaust	R Logan	17-Apr-19
439	0080	015	113744-0080	Diluted Exhaust	R Logan	17-Apr-19
8800	0096	013	113747-0096	Diluted Exhaust	R Logan	18-Apr-19
ND	0715	na	113747-0715	Blank	R Snow	18-Apr-19
77	0708	048	113747-0708	Intake Air	D Janek	18-Apr-19
78	0746	036	113747-0746	Dilution Air	T Long	18-Apr-19
79	0066	004	113747-0066	Diluted Exhaust	R Logan	18-Apr-19
423	0001	015	113747-0001	Diluted Exhaust	R Logan	18-Apr-19
120	0097	na	113747-0097	Lab air	R Snow	18-Apr-19
	0026	na	Not Used			na

MDLs 20-76 for ambient mix
MDLs 65-72 for exhaust

Sample Duration (sec)	Description
1377	Collected from intake air during phases 2 and 3
1377	Collected from dilution air feed during phases 2 and 3
1377	FTP Phases 2 and 3
505	FTP Phase 1
1377	Collected from intake air during phases 2 and 3
1377	Collected from dilution air feed during phases 2 and 3
1197	FTP Phases 2 and 3- sampling this can started 180 seconds late.
505	FTP Phase 1
1377	FTP Phases 2 and 3, Spiked by P Kariher before collecting sample
na	Blank- cap removed and then replaced, valve was not opened.
1377	Collected from intake air during phases 2 and 3
1377	Collected from dilution air feed during phases 2 and 3
1377	FTP Phases 2 and 3
505	FTP Phase 1
60	Sampled air from E180 control room.

Enthalpy Can S/N	Enthalpy Flow Controller ID	EPA Sample ID	Sample Location	Can Concentration 1 (ppt)	MDL 1 (ppt)	Can Concentration 2 (ppt)	MDL 2 (ppt)
Phase1 Cans							
0718	048	113743-0718	Intake Air	ND	72		
0037	036	113743-0037	Dilution Air	ND	69.6	ND	69.6
0728	004	113743-0728	Diluted Exhaust	ND	75.2	75.2	75.2
0098	015	113743-0098	Diluted Exhaust	252	60		
0002	048	113744-0002	Intake Air	ND	73.3		
0087	036	113744-0087	Dilution Air	ND	74.9		
0039	004	113744-0039	Diluted Exhaust	ND	85.7		
0080	015	113744-0080	Diluted Exhaust	439	65	416	65
0096	013	113747-0096	Diluted Exhaust	8800	58.1		
0715	na	113747-0715	Blank	ND	20		
0708	048	113747-0708	Intake Air	77.3	73.2		
0746	036	113747-0746	Dilution Air	78.4	71.1		
0066	004	113747-0066	Diluted Exhaust	78.6	73.9		
0001	015	113747-0001	Diluted Exhaust	423	71.6		
0097	na	113747-0097	Lab air	120	51.1	113	51.1
Phase2 Cans							
1581	013	20190605-002-1581	Intake Air				
0080	036	20190605-003-0080	Intake Air				
0087	004	20190605-002-0087	Diluted Exhaust				
0066	049	20190605-003-0066	Diluted Exhaust				
0704	013	20190611-002-0704	Intake Air				
0709	036	20190611-003-0709	Intake Air				
0002	004	20190611-002-0002	Diluted Exhaust				
0079	049	20190611-003-0079	Diluted Exhaust				
0728	007	20190611-003-0728	Diluted Exhaust				
0027	013	20190612-001-0027	Intake Air				
0746	036	20190612-002-0746	Intake Air				
0097	004	20190612-001-0097	Diluted Exhaust				
0715	049	20190612-002-0715	Diluted Exhaust				
0718	016	20190612-0718	Blank				
Phase3 Cans							
2047	041	113773-2047	Intake Air	47.6	38.4		
2090	043	113773-2090	Dilution Air	54.6	36.7		
2028	004	113773-2028	Diluted Exhaust	51.1	37.3		
2044	024	113773-2044	Diluted Exhaust	36500	179	40200	179
2083	032	113774-2083	Intake Air	50.5	35.7		
2057	036	113774-2057	Dilution Air	54	35.7	50.9	35.7
2053	023	113774-2053	Diluted Exhaust	53.9	35.6		
2117	045	113774-2117	Diluted Exhaust	1820	40.9		
2088	047	113774-2088	Diluted Exhaust	56.6	34.9		

Dyno Dilution Factor	Date Sampled	Sample Duration (sec)
	20190416	1377
	20190416	1377
TBD	20190416	1377
30.16	20190416	505
	20190417	1377
	20190417	1377
TBD	20190417	1197
18.99	20190417	505
	20190418	1377
	20190418	na
	20190418	1377
	20190418	1377
25.89	20190418	1377
21.18	20190418	505
	20190418	60
	20190605	1060
	20190605	1060
	20190605	1060
	20190605	1060
	20190611	1060
	20190611	1060
	20190611	1060
	20190611	1060
	20190611	1060
	20190612	1060
	20190612	1060
	20190612	1060
	20190612	1060
	20190612	
	20190709	1377
	20190709	1377
	20190709	1377
	20190709	505
	20190710	1377
	20190710	1377
	20190710	1377
	20190710	505
	20190710	1377

Description

Collected from intake air during phases 2 and 3
Collected from dilution air feed during phases 2 and 3
FTP Phases 2 and 3
FTP Phase 1

Collected from intake air during phases 2 and 3
Collected from dilution air feed during phases 2 and 3
FTP Phases 2 and 3- sampling this can started 180 seconds late.
FTP Phase 1

FTP Phases 2 and 3, Spiked 9360 ppt before collecting sample
Blank- cap removed and then replaced, valve was not opened.
Collected from intake air during phases 2 and 3
Collected from dilution air feed during phases 2 and 3
FTP Phases 2 and 3
FTP Phase 1
Sampled air from E180 control room.

Collected from dyno bay
Collected from dyno bay
UDDS cold start
UDDS warm start
Collected from dyno bay
Collected from dyno bay
UDDS cold start
UDDS warm start
UDDS warm start, can spiked 5 ppb prior to sample collection
Collected from dyno bay
Collected from dyno bay
UDDS cold start
UDDS warm start
Blank-cap removed, pressure checked with unused flow controller, cap replaced

Collected from intake air during phases 2 and 3
Collected from dilution air feed during phases 2 and 3
FTP Phases 2 and 3
FTP Phase 1
Collected from intake air during phases 2 and 3
Collected from dilution air feed during phases 2 and 3
FTP Phases 2 and 3
FTP Phase 1
FTP Phases 2 and 3, Spiked with EtO before collecting sample

2093	015	113776-2093	Intake Air		105	37.1
2109	007	113776-2109	Dilution Air		54.2	37.3
2062	038	113776-2062	Diluted Exhaust		45.7	36.7
2079	016	113776-2079	Diluted Exhaust		296	40.9
2080	031	113777A-2080	Dilution Air		44.4	34.6
2059	026	113777B-2059	Dilution Air		49.8	38.4
2095	042	113777C-2095	Dilution Air		45.9	38.2
2030	050	113777A-2030	Intake Air		67.3	38.3
2091	013	113777B-2091	Intake Air		63.2	39
2092	024	113777C-2092	Intake Air		59.9	39
2073	011	113777-2073	Blank	ND		20.2
2070	011	113777-2070	Lab Air		46.9	35.8
2094	049	113777A-2094	Diluted Exhaust		222	42.9
2058	012	113777B-2058	Diluted Exhaust		443	38.4
2115	E-NA	113777C-2115	Diluted Exhaust		530	36.2
Phase4 Cans						

20190711	1377
20190711	1377
20190711	1377
20190711	505
20190711	600
20190711	600
20190711	600
20190711	600
20190711	600
20190711	600
20190711	
20190711	600
20190711	600
20190711	600
20190711	600

Collected from intake air during phases 2 and 3
Collected from dilution air feed during phases 2 and 3
FTP Phases 2 and 3
FTP Phase 1
Collected from dilution air feed during US06
Collected from dilution air feed during US06
Collected from dilution air feed during US06
Collected from intake air during US06
Collected from intake air during US06
Collected from intake air during US06
Blank-cap removed, pressure checked with unused flow controller, cap replaced
Sampled air from E180 control room.
US06 diluted exhaust
US06 diluted exhaust
US06 diluted exhaust

Message

From: Laroo, Chris [laroo.chris@epa.gov]
Sent: 6/18/2019 2:09:41 PM
To: Long, Thomas [Long.Thomas@epa.gov]
Subject: One More EtO Question

Tom,

I know the summa cannisters are 6L. Do you now generally what sampled volume Enthalpy generally targets for a test. I know the flow into the cannister is based on the sample duration, but was curious as to what the general target volume sampled is. Thanks.

Regards,

Chris Laroo
Environmental Protection Specialist
US Environmental Protection Agency
Office of Transportation and Air Quality
Assessment and Standards Division
2000 Traverwood Dr.
Ann Arbor, MI 48105
(734) 214-4937
(734) 214-4055 (fax)
Email: laroo.chris@epa.gov

Message

From: Long, Thomas [/O=EXCHANGELABS/OU=EXCHANGE ADMINISTRATIVE GROUP (FYDIBOHF23SPDLT)/CN=RECIPIENTS/CN=8C6A9FA4371E4E3682E45E51082A8FE9-THOMAS, LONG]
Sent: 11/13/2019 3:28:59 PM
To: Snow, Richard [Snow.Richard@epa.gov]
Subject: RE: Spike recoveries

I've tried to call you several times with no answer. Is your office phone not working? Can you come up and talk me through this? It doesn't make sense to me.

_____
Thomas Long, Mechanical Engineer
Mail Drop E343-02
Building D Room 360
109 T. W. Alexander Drive
Research Triangle Park, NC 27711
Phone: 919-541-3944

From: Snow, Richard <Snow.Richard@epa.gov>
Sent: Wednesday, November 13, 2019 10:27 AM
To: Long, Thomas <Long.Thomas@epa.gov>
Cc: Faircloth, James <Faircloth.James@epa.gov>
Subject: RE: Spike recoveries

No, he used a higher concentration, but for a shorter time period, to give ~ the same mass of EtO in the can as the other two.

From: Long, Thomas <Long.Thomas@epa.gov>
Sent: Wednesday, November 13, 2019 10:25 AM
To: Snow, Richard <Snow.Richard@epa.gov>
Cc: Faircloth, James <Faircloth.James@epa.gov>
Subject: RE: Spike recoveries

Based on your spreadsheet he spiked the one can to a higher concentration than the last two.

_____
Thomas Long, Mechanical Engineer
Mail Drop E343-02
Building D Room 360
109 T. W. Alexander Drive
Research Triangle Park, NC 27711
Phone: 919-541-3944

From: Snow, Richard <Snow.Richard@epa.gov>
Sent: Wednesday, November 13, 2019 10:20 AM
To: Long, Thomas <Long.Thomas@epa.gov>; Faircloth, James <Faircloth.James@epa.gov>
Subject: Spike recoveries

Tom,

James and I ran the can data through the "spiking" spreadsheet and came up with recoveries basically +/- 15% for all three cans.
Peter reported both starboost analysed and gas divider calculated EtO concentrations, which were slightly different from each other. We ran both sets through the spreadsheet and came up with the +/- 15%.

Richard Snow | Engineering Technician
U. S. Environmental Protection Agency, Office of Research and Development
Center for Environmental Measurement and Modeling, Air Methods and Characterization Division
Combustion Sources Branch
109 T.W. Alexander Drive, Mail Drop E343-02
RTP, NC 27711

Office 919.541.3135 | Cell 919.621.5852
Snow.Richard@EPA.gov

Message

From: Long, Thomas [/O=EXCHANGELABS/OU=EXCHANGE ADMINISTRATIVE GROUP (FYDIBOHF23SPDLT)/CN=RECIPIENTS/CN=8C6A9FA4371E4E3682E45E51082A8FE9-THOMAS, LONG]
Sent: 5/23/2019 3:48:47 PM
To: Craig Williams [CWilliams@css-inc.com]
Subject: RE: WA34 and ANP

No thank you. The signatures at the bottom include the test date so they do not need to be added to the sample time. 30+ refers to the gage being pegged at the beginning of a test. Double line cross out is a no-no. Duly noted. Lining out blank space is a good practice. Thank her for the feedback.

_____

Thomas Long, Mechanical Engineer
Mail Drop E343-02
Building D Room 360
109 T. W. Alexander Drive
Research Triangle Park, NC 27711
Phone: 919-541-3944

From: Craig Williams <CWilliams@css-inc.com>
Sent: Wednesday, May 22, 2019 4:00 PM
To: Long, Thomas <Long.Thomas@epa.gov>
Subject: FW: WA34 and ANP

Hi Tom,
Attached is the COCLog with Jacob's QA Officer comments and highlights. I'd like to ask Russell and Daniel to meet with Wendy and I to go over her comments and the ask them to address/make her changes on a hard copy. Do you want to meet with us?

Craig

Craig Williams
Senior Engineer
Contractor to the USEPA
CSS (Jacobs Teammate)
Office Phone: (919) 541-0336
www.css-inc.com

From: Plessinger, Wendy [plessinger.wendy@epa.gov]
Sent: Wednesday, May 22, 2019 10:28 AM
To: Craig Williams
Subject: RE: WA34 and ANP

Craig, I've sent you the logs with my comments. It's going to look like a ripped it to shreds but its really just a few of the same types of errors throughout. I did not mark every error if it was a consistent one.

Consistent errors –
Not crossing out (date and initial) empty space
Not dating where initials have been used for a cross out
Illegible handwriting
Not adding AM or PM to the time recorded
Extraneous marks or numbers with no explanation

Wendy Plessinger, M.S. | Jacobs (contractor to US EPA) | EPA-RLS Quality Assurance Officer | 919.541.0185 | 803.319.0259 mobile | plessinger.wendy@epa.gov | wendy.plessinger@jacobs.com | www.jacobs.com

From: Craig Williams <CWilliams@css-inc.com>
Sent: Wednesday, May 22, 2019 9:20 AM
To: Plessinger, Wendy <plessinger.wendy@epa.gov>
Subject: RE: WA34 and ANP

Hi Wendy,
Sampling logs for all cans on the COC are attached. Exception is the Blank can "715".

Please call me after you have a chance to look them over.

Craig

Craig Williams
Senior Engineer
Contractor to the USEPA
CSS (Jacobs Teammate)
Office Phone: (919) 541-0336
www.css-inc.com

From: Craig Williams
Sent: Tuesday, May 21, 2019 3:26 PM
To: Plessinger, Wendy
Subject: RE: WA34 and ANP

Enthalpy COC is attached.

Craig Williams
Senior Engineer
Contractor to the USEPA
CSS (Jacobs Teammate)
1910 Sedwick Road
Durham, NC 27713
Office Phone: (919) 541-0336
www.css-inc.com

From: Plessinger, Wendy [plessinger.wendy@epa.gov]
Sent: Tuesday, May 21, 2019 1:56 PM
To: Craig Williams
Subject: RE: WA34 and ANP

No worries. I can come over around 3pm. Is that ok?

Wendy Plessinger, M.S. | Jacobs (contractor to US EPA) | EPA-RLS Quality Assurance Officer | 919.541.0185 | 803.319.0259 mobile | plessinger.wendy@epa.gov | wendy.plessinger@jacobs.com | www.jacobs.com

From: Craig Williams <CWilliams@css-inc.com>
Sent: Tuesday, May 21, 2019 1:48 PM
To: Plessinger, Wendy <plessinger.wendy@epa.gov>
Subject: RE: WA34 and ANP

Hi Wendy,
Sorry for the delayed response. I can meet anytime.

Thanks

Craig Williams
Senior Engineer
Contractor to the USEPA
CSS (Jacobs Teammate)
1910 Sedwick Road
Durham, NC 27713
Office Phone: (919) 541-0336
www.css-inc.com

From: Plessinger, Wendy [plessinger.wendy@epa.gov]
Sent: Monday, May 20, 2019 10:15 AM
To: Craig Williams
Subject: RE: WA34 and ANP

Craig, Can you and I meet to discuss this project? Since it has cat A attached to it, I'd like to dig in a bit and see where we stand with our portion and also see if there is anything we can help our customer with. When do you have time in the next couple of days? I am open all day tomorrow.

Wendy Plessinger, M.S. | Jacobs (contractor to US EPA) | EPA-RLS Quality Assurance Officer | 919.541.0185 | 803.319.0259 mobile | plessinger.wendy@epa.gov | wendy.plessinger@jacobs.com | www.jacobs.com

---

From: Craig Williams <CWilliams@css-inc.com>
Sent: Monday, May 20, 2019 9:54 AM
To: Singer, Carl <Singer.Carl@epa.gov>
Cc: Winterrowd, Chris <Winterrowd.Chris@epa.gov>; Plessinger, Wendy <plessinger.wendy@epa.gov>
Subject: RE: WA34 and ANP

No, nothing flowed down to me. I emailed the Enthalpy results PDF file to the WACOR and the EPA QA Officer as the WACOR directed on 5/14.

Craig

Craig Williams
Senior Engineer
Contractor to the USEPA
CSS (Jacobs Teammate)
1910 Sedwick Road
Durham, NC 27713
Office Phone: (919) 541-0336
www.css-inc.com

From: Singer, Carl [Singer.Carl@epa.gov]
Sent: Monday, May 20, 2019 9:41 AM
To: Williams, Craig
Cc: Winterrowd, Chris; Plessinger, Wendy
Subject: WA34 and ANP

From your WA34 QAPP:
Any work involving EtO currently falls under the advanced notification process (ANP) at EPA and must adhere to QA Category A requirements

Was there any requirement that flowed down to you from this ANP? Looks like it is all EPA review before releasing. We have other projects on EtO and I need to find what applies to us all.

Carl F. Singer | Jacobs | Senior Engineer II | Research Laboratory Support Team for EPA-RTP | 919.541.4217| 919.757.7543 mobile | singer.carl@epa.gov | carl.singer@jacobs.com | www.jacobs.com

Message

From: Long, Thomas [/O=EXCHANGELABS/OU=EXCHANGE ADMINISTRATIVE GROUP (FYDIBOHF23SPDLT)/CN=RECIPIENTS/CN=8C6A9FA4371E4E3682E45E51082A8FE9-THOMAS, LONG]
Sent: 5/20/2019 6:31:52 PM
To: Craig Williams [CWilliams@css-inc.com]
Subject: Technical directive

Please change 'The Contractor shall provide EPA Method TO-15 analysis including ethylene-oxide (EtO) for 23 sample cans in accordance with the QAPP'. To 'The Contractor shall provide EPA Method TO-15 analysis including ethylene-oxide (EtO) for more sample cans in accordance with the QAPP.'

_____

Thomas Long, Mechanical Engineer
Mail Drop E343-02
Building D Room 360
109 T. W. Alexander Drive
Research Triangle Park, NC 27711
Phone: 919-541-3944

Message

From: Long, Thomas [/O=EXCHANGELABS/OU=EXCHANGE ADMINISTRATIVE GROUP (FYDIBOHF23SPDLT)/CN=RECIPIENTS/CN=8C6A9FA4371E4E3682E45E51082A8FE9-THOMAS, LONG]
Sent: 5/20/2019 3:47:03 PM
To: Craig Williams [CWilliams@css-inc.com]
Subject: RE: Additional ETO tests (5 weeks ~100 SUMMA cans)

Sounds good.

_____
Thomas Long, Mechanical Engineer
Mail Drop E343-02
Building D Room 360
109 T. W. Alexander Drive
Research Triangle Park, NC 27711
Phone: 919-541-3944

From: Craig Williams <CWilliams@css-inc.com>
Sent: Monday, May 20, 2019 11:07 AM
To: Long, Thomas <Long.Thomas@epa.gov>
Subject: Additional ETO tests (5 weeks ~100 SUMMA cans)

Hi Tom,
Are available for a call with Enthalpy today? How about 2:15 - 2:30? I'll have to confirm with Enthalpy too.
Can you confirm that you want Enthalpy to perform the M3C and TO-15 for the additional tests like they did in April?

Craig Williams
Senior Engineer
Contractor to the USEPA
CSS (Jacobs Teammate)
1910 Sedwick Road
Durham, NC 27713
Office Phone: (919) 541-0336
www.css-inc.com

Message

From: Long, Thomas [/O=EXCHANGELABS/OU=EXCHANGE ADMINISTRATIVE GROUP (FYDIBOHF23SPDLT)/CN=RECIPIENTS/CN=8C6A9FA4371E4E3682E45E51082A8FE9-THOMAS, LONG]
Sent: 5/14/2019 2:15:34 PM
To: Nessley, Libby [nessley.libby@epa.gov]
Subject: RE: Enthalpy Analytical Report 0419-093

10 ppb

_____
Thomas Long, Mechanical Engineer
Mail Drop E343-02
Building D Room 360
109 T. W. Alexander Drive
Research Triangle Park, NC 27711
Phone: 919-541-3944

From: Nessley, Libby
Sent: Tuesday, May 14, 2019 10:03 AM
To: Long, Thomas <Long.Thomas@epa.gov>
Subject: RE: Enthalpy Analytical Report 0419-093

Hey Tom,

Let me know what our spike concentrations were for the EtO analyses and I'll get started with data validation review. Thanks!

From: Long, Thomas
Sent: Tuesday, May 14, 2019 10:01 AM
To: Craig Williams <CWilliams@css-inc.com>; Nessley, Libby <Nessley.Libby@epa.gov>
Subject: RE: Enthalpy Analytical Report 0419-093

Thank you, Craig.

_____
Thomas Long, Mechanical Engineer
Mail Drop E343-02
Building D Room 360
109 T. W. Alexander Drive
Research Triangle Park, NC 27711
Phone: 919-541-3944

From: Craig Williams <CWilliams@css-inc.com>
Sent: Tuesday, May 14, 2019 9:57 AM
To: Nessley, Libby <Nessley.Libby@epa.gov>; Long, Thomas <Long.Thomas@epa.gov>
Subject: Enthalpy Analytical Report 0419-093

Hi Tom and Libby,
Report is attached

Craig Williams

Senior Engineer
Contractor to the USEPA
CSS (Jacobs Teammate)
1910 Sedwick Road
Durham, NC 27713
Office Phone: (919) 541-0336
www.css-inc.com

NRMRL QUALITY ASSURANCE PROJECT PLAN

Office of Research and Development
National Risk Management Research Laboratory
Air and Energy Management Division
Distributed Source and Buildings Branch

Mobile Source Emissions and Characterization: Addendum 2-Speciation and Exhaust Gases from Trucks

EPA NRMRL Technical Lead Person: Thomas Long

Project Type: Measurement QA Category A

Extramural Research

QA Track 0030059-QP-1-6
Revision Number: 0
Date: April 9, 2019

Prepared by:
Thomas Long, EPA

EPA Contract Number: EP-C-15-008

National Program: Air-Energy
Project: Emissions Measurement 2-2

Approval Page

QA Project Plan Title:	**Mobile Source Emissions and Characterization: Addendum 2-Speciation and Exhaust Gases from Trucks**
NRMRL QA Tracking ID:	**0030059-QP-1.6**
If Intramural or Extramural, EPA NRMRL Project Approvals	
Name: Technical Lead Person (TLP) Thomas Long	Signature/Date:
Name: TLP's Supervisor Richard Shores	Signature/Date:
Name: QA Manager Libby Nessley	Signature/Date:
Name: AEMD Division Director Lara Phelps	Signature/Date:
Name:	Signature/Date:
If Extramural, Contractor Approvals	
Name: Contractor Manager/Lead Chris Winterrowd	Signature/Date:
Name: Contractor QA: Wendy Plessinger	Signature/Date:
Name: Other Contractors:	Signature/Date:
Name: Other Contractors:	Signature/Date:

The main QAPP that describes all activities related to the Mobile Sources and Emissions Measurement Facility in NRMRL QA Track ID 30059-QP-1-5. Generally, this facility conducts QA Category B research. For this specific project, AEMD has been asked to measure ethylene oxide (EtO) in the exhaust gas as a target compound. Any work involving EtO currently falls under the advanced notification process (ANP) at EPA and must adhere to QA Category A requirements. Additions and deviations from the main QAPP for this project are detailed here.

Commented [NL1]: Look through each QAPP section and make sure we've not missed any revisions/additions that need to be here.

Section 1. Project Description and Objectives

Addition to Section 1.1.
The purpose of this study is to determine whether EtO is found in exhaust from a mobile source using EPA Method TO-15.

Addition to Section 1.2.
For each mobile source tested, samples may be collected for one or more operating conditions.

Commented [NL2]: Can we summarize purpose (1.1) and scope/objectives (1.2) here?

Section 2: Organization and Responsibilities

Addition to Section 2. The ANP requires upper management review that is in addition to the QA Category B NRMRL approval process. All ANP work must also be review and approved the AEMD's Division Director, Lara Phelps, and the NRMRL Deputy Director, Alice Gilliland, must be informed of the work.

Section 3: Scientific Approach

Addition to Section 3. For each Light-duty vehicle, the tests will include the Supplemental Federal Test Protocol including the US06. For each heavy-duty vehicle, the tests will include the Heavy-Duty Urban Dynamometer Driving Schedule (HD-UDDS) and include the option of sampling during a Carb Transient 3 driving schedule.

Section 4: Sampling

Addition to Section 4.1. For each day of testing, a summa can will be taken from the diluted exhaust of the test vehicle for at least one test phase and one composite of multiple test phases.

In addition, one sample will be taken from the dilution air prior to mixing with the raw exhaust and one sample will be taken from the engine intake air. ~~At least one blank, will be taken each week.~~

Modification to Section 4.4.7. For this study in which ~~ethylene oxide (~~EtO~~)~~ will be reported, the sample lines will be coated with Silco. Samples will be collected into individually blank check~~ed~~s 6L Silco/Silonite lined sampling canisters. ~~Samples~~

Section 5: Measurement Procedures

Addition to Table 5.1. Adding EtO to the list of analytes for VOCs. Canisters will be analyzed by GC/MS operating in the Selective Ion Mode.

Addition to Section 5. In addition to EPA Method TO-15, samples from the same passivated cans may optionally be analyzed using EPA Method 3C. The TO-15 target compound list will have a 10 ppb reporting limit or lower. EPA Method 3C (O_2, CO_2, CH_4, CO) will have a 0.10% reporting limit or lower.

Approximately 15 canisters collected from active combustion sources at a significant dilution will be analyzed with an expected reporting limit (RL) of 10ppb. After all samples have been analyzed at the first dilution (10 ppb RL), if samples do not have detectable concentrations of EtO, 1 sample per condition will be chosen and an attempt will be made to reanalyze these samples at a reduced dilution. The reduced dilution will result in a reduced RL. Samples will be introduced to the instrument at successively lower dilutions until the results have questionable validity from smearing/overloading the instrument with other inseparable species (like high CO/CO2, combustion products) or instrument operational viability becomes compromised.

~~For each day of testing, a summa can will be taken from the diluted exhaust of the test vehicle for at least one test phase and one composite of multiple test phases.~~

~~In addition, one sample will be taken from the dilution air prior to mixing with the raw exhaust and one sample will be taken from the engine intake air. At least one blank, will be taken each week.~~

~~One of the composite cans will be spiked with 10 ppb of EtO and analyzed.~~

~~Approximately 15 canisters collected from active combustion sources at a significant dilution with an expected reporting limit (RL) of 10ppb. After all samples have been analyzed at the first dilution (10 ppb RL), if samples do not have detectable concentrations of ethylene oxide, 1 sample per condition will be chosen and an attempt will be made to reanalyze these samples at a reduced dilution. The reduced dilution will result in a reduced RL. Samples will be introduced to the instrument at successively lower dilutions until the results have questionable validity from smearing/overloading the instrument with other inseparable species (like high CO/CO2, combustion products) or instrument operational validity becomes compromised.~~

Reactive compounds can damage the instrument and trapping system and this is usually observed by instrument noise increasing significantly or instrument response reduction. Instrument response reductions of greater than 30%, as quantified by internal standard abundances, indicate the system may be compromised. Attempts will not be made to reduce detection limits below 0.1ppb (due to risks involved in pushing the instrumentation past that level are significant).

The same canister will be analyzed for the TO-15 target compound list with a 10 ppb reporting limit and by EPA Method 3C (O2, CO2, Methane, CO) with a 0.10% reporting limit.
~~The total cost for this project is $15,000 which includes the analysis of~~

Up to 18 canisters will be analyzed at a 10 ppb RL, and up to 5 canisters at a 0.10 ppb RL.

~~For each Light-duty vehicle, the tests will include the Supplemental Federal Test Protocol including the US06. For each heavy-duty vehicle, the tests will include the Heavy-Duty Urban Dynamometer Driving Schedule (HD-UDDS) and include the option of sampling during a Carb Transient 3 driving schedule.~~

Section 6: Quality Metrics (QA/QC)

Additions to Section 6.2. At least one blank, will be taken each week. Results from the blank canisters must to non-detects to be considered acceptable. One of the composite cans will be spiked with 10 ppb of EtO and analyzed. Recover of EtO from spiked canister must be within 20%=??% .

Additions to Section 6.2.9. QA Category A requires that one technical systems audit (TSA) be performed early in the project to ensure that sampling and analysis is performed according to the QAPP and operating procedures used during execution of the project. The AEMD QA Manager will work with the EPA WACOR to schedule a TSA for any work involving sampling/analysis of EtO. In addition, an audit of data quality (ADQ) will be performed prior to reporting results. An ADQ traces the reported data back to the raw data to ensure it has been correctly transcribed, reduced, validated, and reported.

Commented [NL3]: Need some details here regarding calibration and MQOs for QA/QC checks for EtO. What is the MDL? There is no info in main QAPP regarding MDL's other than TBD.

Section 7: Data Analysis, Interpretation, and Management

No change.

Section 8: Reporting Requirements

Addition to Section 8. As previously stated, EPA ANP requires that any project involving the measurement of EtO must be reviewed by AEMD's Division Director and NRMRL's Deputy Director prior to release. After results have been reviewed by the AEMD QA Manager and the ADQ completed, they will be submitted to the AEMD Division

Director for review and approval. The AEMD Division Director will notify the NRMRL Deputy Director and facilitate further review, approval, and clearance.

Message

From: Long, Thomas [/O=EXCHANGELABS/OU=EXCHANGE ADMINISTRATIVE GROUP (FYDIBOHF23SPDLT)/CN=RECIPIENTS/CN=8C6A9FA4371E4E3682E45E51082A8FE9-THOMAS, LONG]
Sent: 4/10/2019 12:14:48 PM
To: Cook, Rich [Cook.Rich@epa.gov]
Subject: RE: Here is an old PR RE: EtO WA Mod PR coming from OTAQ

Thanks for the update.

_____
Thomas Long, Mechanical Engineer
Mail Drop E343-02
Building D Room 360
109 T. W. Alexander Drive
Research Triangle Park, NC 27711
Phone: 919-541-3944

From: Cook, Rich
Sent: Tuesday, April 09, 2019 4:17 PM
To: Long, Thomas <Long.Thomas@epa.gov>
Subject: FW: Here is an old PR RE: EtO WA Mod PR coming from OTAQ

FYI things are chugging along

Rich Cook
Health Effects, Benefits, and Air Toxics Center
Assessment and Standards Division
Office of Transportation and Air Quality
U. S. Environmental Protection Agency
(734)214-4827

From: Klavon, Patty
Sent: Tuesday, April 09, 2019 4:01 PM
To: Paff, Patricia <paff.patricia@epa.gov>
Cc: Cook, Rich <Cook.Rich@epa.gov>
Subject: RE: Here is an old PR RE: EtO WA Mod PR coming from OTAQ

I just routed the PR to Trish for FCO processing.

Patty
X4-4476

From: Paff, Patricia
Sent: Tuesday, April 09, 2019 1:29 PM
To: Klavon, Patty <Klavon.Patty@epa.gov>; Janssen, Greg <janssen.greg@epa.gov>
Cc: Cook, Rich <Cook.Rich@epa.gov>
Subject: Here is an old PR RE: EtO WA Mod PR coming from OTAQ

Here is an old PR

Warehouse

Document Summary: General Ledger Entries
Doc Type: RE
Doc No: 1956H9E010
External Doc No: PR-OAR-19-00311
Commitment Date: 12/20/18
Closed Date: 12/27/18
Servicing Finance Office: RTPFC
Original Amount: $10,000.00
Available Amount: $0.00
Description:
Extended Description:
Funding for WA 3-034 under contract EP-C-15-008 in ORD to fund work supporting the HD NOx Rule. Budget Info:

Document Details: Expand

Line#	Line Amt	Obligated Amt	Refunded Amt	Available Amt	BFY	Fund	Org	Program	Project	FOC	CostOrg	Comments	Extended Description
1	$10,000.00	$10,000.00		$0.00	2019 2020	C	36H2	000A61	n/a	2503			Funding for WA 3-034 under contract EP-C-

Document Activity:

From: Paff, Patricia
Sent: Tuesday, April 9, 2019 1:27 PM
To: Klavon, Patty <Klavon.Patty@epa.gov>; Janssen, Greg <janssen.greg@epa.gov>
Cc: Cook, Rich <Cook.Rich@epa.gov>
Subject: FW: EtO WA Mod PR coming from OTAQ

More info coming. Depending on where the CO is located (after the reorg) we may be able to copy an old PR. If they have moved to HQAD we will need a new PR from scratch otherwise the buyer wont be in the pick list.

From: Cook, Rich
Sent: Tuesday, April 9, 2019 12:51 PM
To: Long, Thomas <Long.Thomas@epa.gov>; Harris, Robin <Harris.Robin@epa.gov>
Cc: Hoyer, Marion <hoyer.marion@epa.gov>; Geidosch, Justine <Geidosch.Justine@epa.gov>; Paff, Patricia <paff.patricia@epa.gov>
Subject: RE: EtO WA Mod PR coming from OTAQ

Robin –

Patricia Paff is our FCO and will initiate this. She will need names of the following:

CO
PO
COR

Thanks!

Rich Cook
Health Effects, Benefits, and Air Toxics Center
Assessment and Standards Division
Office of Transportation and Air Quality
U. S. Environmental Protection Agency
(734)214-4827

From: Long, Thomas
Sent: Tuesday, April 09, 2019 12:15 PM
To: Harris, Robin <Harris.Robin@epa.gov>
Cc: Hoyer, Marion <hoyer.marion@epa.gov>; Cook, Rich <Cook.Rich@epa.gov>; Geidosch, Justine

<Geidosch.Justine@epa.gov>
Subject: EtO WA Mod PR coming from OTAQ

Robin,

Please be advised that OTAQ has requested additional analyses to be performed than covered in the original scope of my Work Assignment 4-034. They will be sending you a PR with funding to be placed on a DCN for contract EP-C-15-008 and Work Assignment 4-034. I will submit an amended PWS in a separate email. Since we hope to take these samples next week, please let me know if there are any issues with this approach as soon as possible. Thank you.

_____

Thomas Long, Mechanical Engineer
Mail Drop E343-02
Building D Room 360
109 T. W. Alexander Drive
Research Triangle Park, NC 27711
Phone: 919-541-3944

Message

From: Long, Thomas [/O=EXCHANGELABS/OU=EXCHANGE ADMINISTRATIVE GROUP (FYDIBOHF23SPDLT)/CN=RECIPIENTS/CN=8C6A9FA4371E4E3682E45E51082A8FE9-THOMAS, LONG]
Sent: 4/9/2019 4:31:17 PM
To: Shores, Richard [Shores.Richard@epa.gov]
Subject: EtO

I went ahead and modified the QAPP to explicitly mention EtO and supplements to TO-15 to measure it. I have submitted that Libby.

I have submitted a modification to the PWS for my work assignment to reflect the extra cost of analysis.

I have requested that Marion et al write a PR for the JACOBS contract on my work assignment.

_____
Thomas Long, Mechanical Engineer
Mail Drop E343-02
Building D Room 360
109 T. W. Alexander Drive
Research Triangle Park, NC 27711
Phone: 919-541-3944

Message

From: Long, Thomas [/O=EXCHANGELABS/OU=EXCHANGE ADMINISTRATIVE GROUP (FYDIBOHF23SPDLT)/CN=RECIPIENTS/CN=8C6A9FA4371E4E3682E45E51082A8FE9-THOMAS, LONG]
Sent: 5/9/2019 6:46:24 PM
To: McDonald, Joseph [mcdonald.joseph@epa.gov]
CC: Hays, Michael [Hays.Michael@epa.gov]; Baldauf, Richard [Baldauf.Richard@epa.gov]
Subject: FW: RA-2; Output 1 products/planning

Joe,

Do you want to put something in there about our low NOx work with Sanchez? And/or small engine work? I'll send you a link to Hay's document.

For example, I'm putting in these two . . .

Brief Description and Research Use: Using TO-15 based analysis of the emissions from a GDI LDT, determine whether EtO can be tentatively identified.
Product Form: This will be an EPA report provided to OTAQ included an overview slide and a spreadsheet of validated data.
Key Words: Light-duty Truck, GDI, EtO
Interdependencies (as appropriate):
Product Lead: Thomas Long, ORD/NRMRL/AEMD
Partners (as appropriate): Joseph McDonald, ORD/NRMRL/AEMD and OTAQ; Marion Hoyer, OTAQ; Rich Cook, OTAQ
Start Date: July 1, 2019 Delivery Date: January 1, 2020

Brief Description and Research Use: Improve emission factors, especially for NO_X , for class 8 trucks in both on- and off-cycle emissions. Using TO-15 based analysis of the emissions from a HDDT, determine whether EtO can be tentatively identified.
Product Form: This will be an EPA report provided to OTAQ included an overview slide and a spreadsheet of validated data.
Key Words: Heavy-duty Diesel Truck, oxides of nitrogen, off-cycle emissions, EtO
Interdependencies (as appropriate):
Product Lead: Thomas Long, ORD/NRMRL/AEMD
Partners (as appropriate): Joseph McDonald, ORD/NRMRL/AEMD and OTAQ; James Sanchez, OTAQ Rich Cook, OTAQ
Start Date: July 1, 2019 Delivery Date: January 1, 2020

But given the time frame, it might be better for you to be this product lead.

Brief Description and Research Use: Improve emission factors for small (<16 hp) engines. Using TO-15 based analysis of the emissions from a SI small engine, determine whether EtO can be tentatively identified.
Product Form: This will be an EPA report provided to OTAQ included an overview slide and a spreadsheet of validated data.
Key Words: small engine, emission rate, EtO
Interdependencies (as appropriate):
Product Lead: Joseph McDonald, ORD/NRMRL/AEMD
Partners (as appropriate): Thomas Long, ORD/NRMRL/AEMD and OTAQ; James Sanchez, OTAQ; Darrell Sonntag, OTAQ; Marion Hoyer, OTAQ Rich Cook, OTAQ
Start Date: January 2019 Delivery Date: July 2020

Thomas Long, Mechanical Engineer
Mail Drop E343-02

Building D Room 360
109 T. W. Alexander Drive
Research Triangle Park, NC 27711
Phone: 919-541-3944

From: Hays, Michael
Sent: Thursday, May 09, 2019 10:38 AM
To: Dye, Janice <Dye.Janice@epa.gov>; DeMarini, David <DeMarini.David@epa.gov>; Higuchi, Mark <Higuchi.Mark@epa.gov>; Jetter, James <Jetter.Jim@epa.gov>; Yelverton, Tiffany <Yelverton.Tiffany@epa.gov>; Holder, Amara <holder.amara@epa.gov>; Keating, Terry <Keating.Terry@epa.gov>; Gullett, Brian <Gullett.Brian@epa.gov>; Kinsey, John <Kinsey.John@epa.gov>; Linak, Bill <Linak.Bill@epa.gov>; Ryan, Jeff <Ryan.Jeff@epa.gov>; Long, Thomas <Long.Thomas@epa.gov>; George, Ingrid <George.Ingrid@epa.gov>
Cc: Nunez, Carlos <Nunez.Carlos@epa.gov>; Rosati, Jacky <Rosati.Jacky@epa.gov>; Shores, Richard <Shores.Richard@epa.gov>; Phelps, Lara <Phelps.Lara@epa.gov>; Gilmour, Ian <Gilmour.Ian@epa.gov>
Subject: RA-2; Output 1 products/planning

Hi everyone,

I'm the new output lead for Output 1 in RA-2. The Output will basically keep track of the progress we make on **combustion source emissions** measurements and methods research. You've been identified as an individual that may have a product to contribute to this Output. At this point, I need a few things from you so that the RA lead (Carlos Nunez) can work with the NPD to move our research efforts forward with regard to potential funding and for adequate recognition of the research.

1. Please read the output description (link will be provided in separate message) and be sure it covers your research adequately. Feel free to make changes, but please track. Also, please work in the shared document for efficiency.

2. Provide a product description for your planned research contributions over the next four years. A template is provided in the One Drive document.

3. Send to anyone that is not on this distribution list. Please cc me and Carlos.

That's it. Thanks for your contribution to the RA-2 planning.

Best regards,

Mike

Michael D. Hays, Ph.D. // 919-541-3984 (O)
U.S. Environmental Protection Agency
Office of Research and Development -- National Risk Management Research Laboratory
109 T.W. Alexander Drive (MD-e343-03)
Research Triangle Park, NC 27519

https://orcid.org/0000-0002-4029-8660
https://vivo.epa.gov/vivo/person/hays.michael

Message

From: Long, Thomas [/O=EXCHANGELABS/OU=EXCHANGE ADMINISTRATIVE GROUP (FYDIBOHF23SPDLT)/CN=RECIPIENTS/CN=8C6A9FA4371E4E3682E45E51082A8FE9-THOMAS, LONG]
Sent: 5/8/2019 6:45:13 PM
To: Craig Williams [CWilliams@css-inc.com]
Subject: RE: X2 - Enthalpy POs 3049 and 3050 Submission

I can wait. We'll need the full report to QC the data before we can use it anyway. Please let Bryan know.

_____
Thomas Long, Mechanical Engineer
Mail Drop E343-02
Building D Room 360
109 T. W. Alexander Drive
Research Triangle Park, NC 27711
Phone: 919-541-3944

From: Bryan Tyler <bryan.tyler@enthalpy.com>
Sent: Wednesday, May 08, 2019 2:41 PM
To: Craig Williams <CWilliams@css-inc.com>; Ashley Miller <ashley.miller@enthalpy.com>
Cc: Thorne Gregory <thorne.gregory@enthalpy.com>; Melanie Bethea <melanie.bethea@enthalpy.com>; Long, Thomas <Long.Thomas@epa.gov>
Subject: RE: X2 - Enthalpy POs 3049 and 3050 Submission

Hi Everyone,
Fingers crossed – our plan will be to run all your EO samples at the lower reporting limit (100ppb)...they TO-15 analysis gave us confidence this should be doable.

We will be running samples tomorrow.

Would you like the TO-15 and EPA Method 3C data in advance of the EO?

Please take a moment to provide customer feedback.

ENTHALPY ANALYTICAL

Bryan Tyler
Vice President
Enthalpy Analytical, LLC
800 Capitola Drive, Suite 1
Durham, NC 27713
(919) 850-4392
bryan.tyler@enthalpy.com
www.enthalpy.com

Terms and Conditions
Enthalpy Sample Acceptance Policy

SSAS Laboratory ID: L0036, L0149 (metals only)

From: Craig Williams <CWilliams@css-inc.com>
Sent: Tuesday, May 7, 2019 8:47 AM
To: Bryan Tyler <bryan.tyler@enthalpy.com>; Ashley Miller <ashley.miller@enthalpy.com>
Cc: Thorne Gregory <thorne.gregory@enthalpy.com>; Melanie Bethea <melanie.bethea@enthalpy.com>; Long, Thomas <Long.Thomas@epa.gov>
Subject: RE: X2 - Enthalpy POs 3049 and 3050 Submission

Bryan,
Thank you for keeping us updated.

Craig

Craig Williams
Senior Engineer
Contractor to the USEPA
CSS (Jacobs Teammate)
1910 Sedwick Road
Durham, NC 27713
Office Phone: (919) 541-0336
www.css-inc.com

From: Bryan Tyler [bryan.tyler@enthalpy.com]
Sent: Tuesday, May 07, 2019 5:37 AM
To: Craig Williams; Ashley Miller
Cc: Thorne Gregory; Melanie Bethea; Long, Thomas
Subject: RE: X2 - Enthalpy POs 3049 and 3050 Submission

Craig,
We have the instrument manufacturer rep onsite today for maintenance and repairs…we hope these repairs allow us to start calibrating for Ethylene oxide early Wednesday morning.

The TO-15 analysis is complete, we were able to run it at ~1ppb (originally quoted at 10ppb)…we hope the same aggressive analyses can be done for Ethylene oxide which will yield as low of results as possible.

I will have an update for you mid-morning tomorrow. Again, thank you for your patience.

Best,
Bryan

Please take a moment to provide customer feedback.

ENTHALPY
ANALYTICAL

Bryan Tyler
Vice President
Enthalpy Analytical, LLC
800 Capitola Drive, Suite 1
Durham, NC 27713
(919) 850-4392
bryan.tyler@enthalpy.com
www.enthalpy.com

Terms and Conditions
Enthalpy Sample Acceptance Policy

SSAS Laboratory ID: L0036, L0149 (metals only)

From: Craig Williams <CWilliams@css-inc.com>
Sent: Friday, May 3, 2019 11:11 AM
To: Bryan Tyler <bryan.tyler@enthalpy.com>; Ashley Miller <ashley.miller@enthalpy.com>
Cc: Thorne Gregory <thorne.gregory@enthalpy.com>; Melanie Bethea <melanie.bethea@enthalpy.com>; Long, Thomas <Long.Thomas@epa.gov>
Subject: RE: X2 - Enthalpy POs 3049 and 3050 Submission

Bryan,
Please let us know how things progress.

Craig

Craig Williams
Senior Engineer
Contractor to the USEPA
CSS (Jacobs Teammate)
1910 Sedwick Road
Durham, NC 27713
Office Phone: (919) 541-0336
www.css-inc.com

From: Bryan Tyler [bryan.tyler@enthalpy.com]
Sent: Thursday, May 02, 2019 6:12 PM
To: Craig Williams; Ashley Miller
Cc: Thorne Gregory; Melanie Bethea; Long, Thomas
Subject: RE: X2 - Enthalpy POs 3049 and 3050 Submission

Craig,
This is my fault – sorry for the delay on my response. We are currently running the TO-15 analyses over the next 2 days and the Ethylene oxide analyses will run early next week. I am going to talk with our teams in the morning to get delivery times on this data.

I apologize this report is going to be late.

Bryan

Please take a moment to provide customer feedback.

ENTHALPY ANALYTICAL

Bryan Tyler
Vice President
Enthalpy Analytical, LLC
800 Capitola Drive, Suite 1
Durham, NC 27713
(919) 850-4392

bryan.tyler@enthalpy.com
www.enthalpy.com

Terms and Conditions
Enthalpy Sample Acceptance Policy

SSAS Laboratory ID: L0036, L0149 (metals only)

From: Craig Williams <CWilliams@css-inc.com>
Sent: Thursday, May 2, 2019 12:18 PM
To: Bryan Tyler <bryan.tyler@enthalpy.com>; Ashley Miller <ashley.miller@enthalpy.com>
Cc: Thorne Gregory <thorne.gregory@enthalpy.com>; Melanie Bethea <melanie.bethea@enthalpy.com>; Long, Thomas <Long.Thomas@epa.gov>
Subject: RE: X2 - Enthalpy POs 3049 and 3050 Submission

Hi Byran,
Can you please elaborate and provide an update by COB today?

Thanks,

Craig Williams
Senior Engineer
Contractor to the USEPA
CSS (Jacobs Teammate)
1910 Sedwick Road
Durham, NC 27713
Office Phone: (919) 541-0336
www.css-inc.com

From: Bryan Tyler [bryan.tyler@enthalpy.com]
Sent: Wednesday, May 01, 2019 2:55 PM
To: Craig Williams; Ashley Miller
Cc: Thorne Gregory; Melanie Bethea; Long, Thomas
Subject: RE: X2 - Enthalpy POs 3049 and 3050 Submission

Craig,
We have had some headwinds with this project – I will update you tonight/in the morning.

Bryan

Please take a moment to provide customer feedback.

ENTHALPY
ANALYTICAL

Bryan Tyler
Vice President
Enthalpy Analytical, LLC
800 Capitola Drive, Suite 1
Durham, NC 27713
(919) 850-4392
bryan.tyler@enthalpy.com

www.enthalpy.com

Terms and Conditions
Enthalpy Sample Acceptance Policy

SSAS Laboratory ID: L0036, L0149 (metals only)

From: Craig Williams <CWilliams@css-inc.com>
Sent: Wednesday, May 1, 2019 10:03 AM
To: Bryan Tyler <bryan.tyler@enthalpy.com>; Ashley Miller <ashley.miller@enthalpy.com>
Cc: Thorne Gregory <thorne.gregory@enthalpy.com>; Melanie Bethea <melanie.bethea@enthalpy.com>; Long, Thomas <Long.Thomas@epa.gov>
Subject: RE: X2 - Enthalpy POs 3049 and 3050 Submission

Hi Bryan,
Just checking if all is going OK and on schedule.

Thanks

Craig Williams
Senior Engineer
Contractor to the USEPA
CSS (Jacobs Teammate)
1910 Sedwick Road
Durham, NC 27713
Office Phone: (919) 541-0336
www.css-inc.com

From: Bryan Tyler [bryan.tyler@enthalpy.com]
Sent: Tuesday, April 23, 2019 12:46 PM
To: Craig Williams; Ashley Miller
Cc: Thorne Gregory; Melanie Bethea; Long, Thomas
Subject: RE: X2 - Enthalpy POs 3049 and 3050 Submission

Samples have been received and are logged into the lab. Sample analysis will start later (keep in mind there are 4 separate analyses required) this week into next, final reports should be to you by COB next Friday 5/3.

Thanks,
Bryan

Please take a moment to provide customer feedback.

ENTHALPY
ANALYTICAL

Bryan Tyler
Vice President
Enthalpy Analytical, LLC
800 Capitola Drive, Suite 1
Durham, NC 27713
(919) 850-4392
bryan.tyler@enthalpy.com
www.enthalpy.com

Terms and Conditions
Enthalpy Sample Acceptance Policy

SSAS Laboratory ID: L0036, L0149 (metals only)

From: Craig Williams <CWilliams@css-inc.com>
Sent: Tuesday, April 23, 2019 12:43 PM
To: Ashley Miller <ashley.miller@enthalpy.com>; Bryan Tyler <bryan.tyler@enthalpy.com>
Cc: Thorne Gregory <thorne.gregory@enthalpy.com>; Melanie Bethea <melanie.bethea@enthalpy.com>; Long, Thomas <Long.Thomas@epa.gov>
Subject: RE: X2 - Enthalpy POs 3049 and 3050 Submission

Hi Bryan and Ashley,
Can you please provide an update on the TO-15, EPA Method 3C, and EtO analysis and an estimate of when you will provide the results?

Thanks,

Craig Williams
Senior Engineer
Contractor to the USEPA
CSS (Jacobs Teammate)
1910 Sedwick Road
Durham, NC 27713
Office Phone: (919) 541-0336
www.css-inc.com

From: Ashley Miller [ashley.miller@enthalpy.com]
Sent: Wednesday, April 17, 2019 3:39 PM
To: Craig Williams; Melanie Bethea; Long, Thomas
Cc: Bryan Tyler; Thorne Gregory
Subject: RE: X2 - Enthalpy POs 3049 and 3050 Submission

Craig-

That will work fine. We can hold them until the rest arrive.

Please take a moment to provide customer feedback.

ENTHALPY ANALYTICAL

Ashley Miller
Senior Project Manager
Enthalpy Analytical, LLC
800 Capitola Drive, Suite 1
Durham, NC 27713
(919) 850-4392
ashley.miller@enthalpy.com
www.enthalpy.com

Terms and Conditions

Enthalpy Sample Acceptance Policy
SSAS Laboratory ID: L0036, L0149 (metals only)

From: Craig Williams <CWilliams@css-inc.com>
Sent: Wednesday, April 17, 2019 3:33 PM
To: Ashley Miller <ashley.miller@enthalpy.com>; Melanie Bethea <melanie.bethea@enthalpy.com>; Long, Thomas <Long.Thomas@epa.gov>
Cc: Bryan Tyler <bryan.tyler@enthalpy.com>; Thorne Gregory <thorne.gregory@enthalpy.com>
Subject: RE: X2 - Enthalpy POs 3049 and 3050 Submission

Daniel may bring a couple boxes of SUMMA cans with chain of custody forms when he picks up the controller. Is this OK? We'd bring the remaining cans over on Friday.

Craig Williams
Senior Engineer
Contractor to the USEPA
CSS (Jacobs Teammate)
1910 Sedwick Road
Durham, NC 27713
Office Phone: (919) 541-0336
www.css-inc.com

From: Ashley Miller [ashley.miller@enthalpy.com]
Sent: Wednesday, April 17, 2019 3:17 PM
To: Craig Williams; Melanie Bethea; Long, Thomas
Cc: Bryan Tyler; Thorne Gregory
Subject: RE: X2 - Enthalpy POs 3049 and 3050 Submission

Hi Craig-

Yes I will be here. I will plan to see him tomorrow. Thanks!

Please take a moment to provide customer feedback.

ENTHALPY ANALYTICAL

Ashley Miller
Senior Project Manager
Enthalpy Analytical, LLC
800 Capitola Drive, Suite 1
Durham, NC 27713
(919) 850-4392
ashley.miller@enthalpy.com
www.enthalpy.com

Terms and Conditions
Enthalpy Sample Acceptance Policy
SSAS Laboratory ID: L0036, L0149 (metals only)

From: Craig Williams <CWilliams@css-inc.com>
Sent: Wednesday, April 17, 2019 3:15 PM
To: Ashley Miller <ashley.miller@enthalpy.com>; Melanie Bethea <melanie.bethea@enthalpy.com>; Long, Thomas <Long.Thomas@epa.gov>

Cc: Bryan Tyler <bryan.tyler@enthalpy.com>; Thorne Gregory <thorne.gregory@enthalpy.com>
Subject: RE: X2 - Enthalpy POs 3049 and 3050 Submission

Will you be there as the contact person?

Craig

Craig Williams
Senior Engineer
Contractor to the USEPA
CSS (Jacobs Teammate)
1910 Sedwick Road
Durham, NC 27713
Office Phone: (919) 541-0336
www.css-inc.com

From: Craig Williams
Sent: Wednesday, April 17, 2019 3:13 PM
To: Ashley Miller; Melanie Bethea; Long, Thomas
Cc: Bryan Tyler; Thorne Gregory
Subject: RE: X2 - Enthalpy POs 3049 and 3050 Submission

Ashley,
Daniel Janek from Jacobs will pick up the controller and plans to be there at 8:00.

Craig

Craig Williams
Senior Engineer
Contractor to the USEPA
CSS (Jacobs Teammate)
1910 Sedwick Road
Durham, NC 27713
Office Phone: (919) 541-0336
www.css-inc.com

From: Ashley Miller [ashley.miller@enthalpy.com]
Sent: Wednesday, April 17, 2019 2:53 PM
To: Craig Williams; Melanie Bethea; Long, Thomas
Cc: Bryan Tyler; Thorne Gregory
Subject: RE: X2 - Enthalpy POs 3049 and 3050 Submission

Craig-

Yes anytime after 8 am will work fine. Thanks!

Please take a moment to provide customer feedback.

ENTHALPY
ANALYTICAL

Ashley Miller
Senior Project Manager
Enthalpy Analytical, LLC
800 Capitola Drive, Suite 1
Durham, NC 27713

(919) 850-4392
ashley.miller@enthalpy.com
www.enthalpy.com

Terms and Conditions
Enthalpy Sample Acceptance Policy
SSAS Laboratory ID: L0036, L0149 (metals only)

From: Craig Williams <CWilliams@css-inc.com>
Sent: Wednesday, April 17, 2019 2:49 PM
To: Ashley Miller <ashley.miller@enthalpy.com>; Melanie Bethea <melanie.bethea@enthalpy.com>; Long, Thomas <Long.Thomas@epa.gov>
Cc: Bryan Tyler <bryan.tyler@enthalpy.com>; Thorne Gregory <thorne.gregory@enthalpy.com>
Subject: RE: X2 - Enthalpy POs 3049 and 3050 Submission

Yes, understood. The controller will not have been blank checked. Is it OK to send someone over early tomorrow morning?

Craig Williams
Senior Engineer
Contractor to the USEPA
CSS (Jacobs Teammate)
1910 Sedwick Road
Durham, NC 27713
Office Phone: (919) 541-0336
www.css-inc.com

From: Ashley Miller [ashley.miller@enthalpy.com]
Sent: Wednesday, April 17, 2019 2:45 PM
To: Craig Williams; Melanie Bethea; Long, Thomas
Cc: Bryan Tyler; Thorne Gregory
Subject: RE: X2 - Enthalpy POs 3049 and 3050 Submission

Hi Craig-

Just to confirm, the controller will not be blank-checked via GC/MS. It has been purging for quite some time so there is no reason to think there would be contamination, but just wanted to clarify that we will not have the instrument back up and running to be able to blank check prior to pickup.

Please take a moment to provide customer feedback.

ENTHALPY
ANALYTICAL

Ashley Miller
Senior Project Manager
Enthalpy Analytical, LLC
800 Capitola Drive, Suite 1
Durham, NC 27713
(919) 850-4392
ashley.miller@enthalpy.com
www.enthalpy.com

Terms and Conditions

Enthalpy Sample Acceptance Policy
SSAS Laboratory ID: L0036, L0149 (metals only)

From: Craig Williams <CWilliams@css-inc.com>
Sent: Wednesday, April 17, 2019 12:49 PM
To: Melanie Bethea <melanie.bethea@enthalpy.com>; Ashley Miller <ashley.miller@enthalpy.com>; Long, Thomas <Long.Thomas@epa.gov>
Cc: Bryan Tyler <bryan.tyler@enthalpy.com>; Thorne Gregory <thorne.gregory@enthalpy.com>
Subject: RE: X2 - Enthalpy POs 3049 and 3050 Submission

Hi Melanie,
We can send someone over first thing tomorrow morning to pick up the controller. Is that OK? What time will it be available?

Craig Williams
Senior Engineer
Contractor to the USEPA
CSS (Jacobs Teammate)
1910 Sedwick Road
Durham, NC 27713
Office Phone: (919) 541-0336
www.css-inc.com

From: Melanie Bethea [melanie.bethea@enthalpy.com]
Sent: Wednesday, April 17, 2019 11:12 AM
To: Ashley Miller; Craig Williams; Long, Thomas
Cc: Bryan Tyler; Thorne Gregory
Subject: RE: X2 - Enthalpy POs 3049 and 3050 Submission

Good Morning,

The requested controller has been purging with nitrogen for 18+ hours. We will not be able to blank check the controller today as the instruments is still coming on line.

Please let us know how you would like to proceed.

Thank you,
Melanie

Please take a moment to provide customer feedback.

ENTHALPY
ANALYTICAL

Melanie Bethea
Operations Manager
Enthalpy Analytical, LLC
800 Capitola Drive, Suite 1
Durham, NC 27713
(919) 850.4392
melanie.bethea@enthalpy.com
www.enthalpy.com

Terms and Conditions
Enthalpy Sample Acceptance Policy

SSAS Laboratory ID: L0036, L0149 (metals only)

From: Ashley Miller <ashley.miller@enthalpy.com>
Sent: Tuesday, April 16, 2019 2:37 PM
To: Craig Williams <CWilliams@css-inc.com>; Long, Thomas <Long.Thomas@epa.gov>
Cc: Bryan Tyler <bryan.tyler@enthalpy.com>; Thorne Gregory <thorne.gregory@enthalpy.com>; Melanie Bethea <melanie.bethea@enthalpy.com>
Subject: RE: X2 - Enthalpy POs 3049 and 3050 Submission

Understood. If things improve I will reach out. Thanks for your patience!

Please take a moment to provide customer feedback.

ENTHALPY ANALYTICAL

Ashley Miller
Senior Project Manager
Enthalpy Analytical, LLC
800 Capitola Drive, Suite 1
Durham, NC 27713
(919) 850-4392
ashley.miller@enthalpy.com
www.enthalpy.com

Terms and Conditions
Enthalpy Sample Acceptance Policy
SSAS Laboratory ID: L0036, L0149 (metals only)

From: Craig Williams <CWilliams@css-inc.com>
Sent: Tuesday, April 16, 2019 2:35 PM
To: Ashley Miller <ashley.miller@enthalpy.com>; Long, Thomas <Long.Thomas@epa.gov>
Cc: Bryan Tyler <bryan.tyler@enthalpy.com>; Thorne Gregory <thorne.gregory@enthalpy.com>; Melanie Bethea <melanie.bethea@enthalpy.com>
Subject: RE: X2 - Enthalpy POs 3049 and 3050 Submission

Hi Ashley,
I would like to hold off in the hopes that your instrument is back up and running tomorrow. I'll check back around 2:00 tomorrow.

I appreciate your effort.

Thanks,

Craig Williams
Senior Engineer
Contractor to the USEPA
CSS (Jacobs Teammate)
1910 Sedwick Road

Durham, NC 27713
Office Phone: (919) 541-0336
www.css-inc.com

From: Ashley Miller [ashley.miller@enthalpy.com]
Sent: Tuesday, April 16, 2019 2:15 PM
To: Craig Williams; Long, Thomas
Cc: Bryan Tyler; Thorne Gregory; Melanie Bethea
Subject: RE: X2 - Enthalpy POs 3049 and 3050 Submission

Hi Craig and Thomas-

Sorry to deliver sad news, but our instrument is down and will not be back up before tomorrow. Please let me know if you would like the additional controller, or if you would like to wait until we get the instrument back up and can blank check it. Please note, I can't guarantee we will be back up and running by any certain time tomorrow.

Sorry for the bad news. Let me know how to proceed. Thanks!

Please take a moment to provide customer feedback.

ENTHALPY
ANALYTICAL

Ashley Miller
Senior Project Manager
Enthalpy Analytical, LLC
800 Capitola Drive, Suite 1
Durham, NC 27713
(919) 850-4392
ashley.miller@enthalpy.com
www.enthalpy.com

Terms and Conditions
Enthalpy Sample Acceptance Policy
SSAS Laboratory ID: L0036, L0149 (metals only)

From: Craig Williams <CWilliams@css-inc.com>
Sent: Tuesday, April 16, 2019 1:03 PM
To: Long, Thomas <Long.Thomas@epa.gov>
Cc: Ashley Miller <ashley.miller@enthalpy.com>; Bryan Tyler <bryan.tyler@enthalpy.com>; Thorne Gregory <thorne.gregory@enthalpy.com>; Melanie Bethea <melanie.bethea@enthalpy.com>
Subject: Re: X2 - Enthalpy POs 3049 and 3050 Submission

Hi Ashley,
Thanks. It's important for us that it's blank checked. I can pick it up in the morning if you're able to have it ready and blank checked. Please let me know.

Thanks

Sent from my iPhone

On Apr 16, 2019, at 12:56 PM, Long, Thomas <Long.Thomas@epa.gov> wrote:

If we sent someone over at 8 am tomorrow to pick it up could we get one that had been blank checked?

_____
Thomas Long, Mechanical Engineer
Mail Drop E343-02
Building D Room 360
109 T. W. Alexander Drive
Research Triangle Park, NC 27711
Phone: 919-541-3944

From: Ashley Miller <ashley.miller@enthalpy.com>
Sent: Tuesday, April 16, 2019 12:51 PM
To: Craig Williams <CWilliams@css-inc.com>; Bryan Tyler <bryan.tyler@enthalpy.com>; Long, Thomas <Long.Thomas@epa.gov>
Cc: Thorne Gregory <thorne.gregory@enthalpy.com>; Melanie Bethea <melanie.bethea@enthalpy.com>
Subject: RE: X2 - Enthalpy POs 3049 and 3050 Submission

Hi Craig-

We can build another flow controller, but we will not be able to blank check it. If you guys are ok with using a flow controller that has not been blank-checked then I can have it over to you with the rest of the equipment this afternoon. It is very unlikely that this would result in any sort of contamination, and we are confident that the flow controller would be usable without concern as-is.

Let me know if this is acceptable, and I'll have it to you today. Thanks!

Please take a moment to provide customer feedback.

<image001.png>

Ashley Miller
Senior Project Manager
Enthalpy Analytical, LLC
800 Capitola Drive, Suite 1
Durham, NC 27713
(919) 850-4392
ashley.miller@enthalpy.com
www.enthalpy.com

Terms and Conditions
Enthalpy Sample Acceptance Policy
SSAS Laboratory ID: L0036, L0149 (metals only)

From: Craig Williams <CWilliams@css-inc.com>
Sent: Tuesday, April 16, 2019 12:28 PM
To: Ashley Miller <ashley.miller@enthalpy.com>; Bryan Tyler <bryan.tyler@enthalpy.com>; Long, Thomas <Long.Thomas@epa.gov>
Cc: Thorne Gregory <thorne.gregory@enthalpy.com>; Melanie Bethea <melanie.bethea@enthalpy.com>
Subject: RE: X2 - Enthalpy POs 3049 and 3050 Submission

Hi Ashley,
Thank you very much. Please let me know if it will be coming with the cans that Enthalpy's delivering today.

Craig

Craig Williams
Senior Engineer
Contractor to the USEPA
CSS (Jacobs Teammate)
1910 Sedwick Road
Durham, NC 27713
Office Phone: (919) 541-0336
www.css-inc.com

From: Ashley Miller [ashley.miller@enthalpy.com]
Sent: Tuesday, April 16, 2019 12:00 PM
To: Craig Williams; Bryan Tyler; Long, Thomas
Cc: Thorne Gregory; Melanie Bethea
Subject: RE: X2 - Enthalpy POs 3049 and 3050 Submission

Craig-

We are checking to see if we have another 200cc/min flow controller. I will be in touch soon.

Please take a moment to provide customer feedback.

<image001.png>

Ashley Miller
Senior Project Manager
Enthalpy Analytical, LLC
800 Capitola Drive, Suite 1
Durham, NC 27713
(919) 850-4392
ashley.miller@enthalpy.com
www.enthalpy.com

Terms and Conditions
Enthalpy Sample Acceptance Policy
SSAS Laboratory ID: L0036, L0149 (metals only)

From: Craig Williams <CWilliams@css-inc.com>
Sent: Tuesday, April 16, 2019 11:49 AM
To: Bryan Tyler <bryan.tyler@enthalpy.com>; Long, Thomas <Long.Thomas@epa.gov>
Cc: Thorne Gregory <thorne.gregory@enthalpy.com>; Melanie Bethea <melanie.bethea@enthalpy.com>; Ashley Miller <ashley.miller@enthalpy.com>
Subject: RE: X2 - Enthalpy POs 3049 and 3050 Submission

Bryan,
Tom says that he's short an orifice for the spiked can. Please send a 1377 sec/180 flow for the spiked can today.

Craig Williams
Senior Engineer
Contractor to the USEPA
CSS (Jacobs Teammate)
1910 Sedwick Road

Durham, NC 27713
Office Phone: (919) 541-0336
www.css-inc.com

From: Craig Williams
Sent: Tuesday, April 16, 2019 8:44 AM
To: Bryan Tyler; Long, Thomas
Cc: Thorne Gregory; Melanie Bethea; Ashley Miller
Subject: RE: X2 - Enthalpy POs 3049 and 3050 Submission

Hi Bryan,
I talked to Tom this morning and the answer from Jacobs and EPA is yes, running the samples after all have been received by Enthalpy is OK.

Thanks.

Craig Williams
Senior Engineer
Contractor to the USEPA
CSS (Jacobs Teammate)
1910 Sedwick Road
Durham, NC 27713
Office Phone: (919) 541-0336
www.css-inc.com

From: Bryan Tyler [bryan.tyler@enthalpy.com]
Sent: Monday, April 15, 2019 4:04 PM
To: Craig Williams; Long, Thomas
Cc: Thorne Gregory; Melanie Bethea; Ashley Miller
Subject: RE: X2 - Enthalpy POs 3049 and 3050 Submission

Hi All,
We will not run the samples until they are all received…with this schedule sample analysis will commence on 4/22.

Does this work for Jacobs/EPA?

Please take a moment to provide customer feedback.

<image001.png>

Bryan Tyler
Vice President
Enthalpy Analytical, LLC
800 Capitola Drive, Suite 1
Durham, NC 27713
(919) 850-4392
bryan.tyler@enthalpy.com
www.enthalpy.com

Terms and Conditions
Enthalpy Sample Acceptance Policy

SSAS Laboratory ID: L0036, L0149 (metals only)

From: Craig Williams <CWilliams@css-inc.com>
Sent: Monday, April 15, 2019 3:59 PM
To: Long, Thomas <Long.Thomas@epa.gov>; Bryan Tyler <bryan.tyler@enthalpy.com>
Cc: Thorne Gregory <thorne.gregory@enthalpy.com>; Melanie Bethea <melanie.bethea@enthalpy.com>; Ashley Miller <ashley.miller@enthalpy.com>
Subject: RE: X2 - Enthalpy POs 3049 and 3050 Submission

Hi Tom,
Enthalpy is only 5 minutes away. I think Jacobs can arrange for someone to drive the samples over tomorrow. Are you proposing taking them all at the end of the day or more frequent?

Craig Williams
Senior Engineer
Contractor to the USEPA
CSS (Jacobs Teammate)
1910 Sedwick Road
Durham, NC 27713
Office Phone: (919) 541-0336
www.css-inc.com

From: Long, Thomas [Long.Thomas@epa.gov]
Sent: Monday, April 15, 2019 3:14 PM
To: Craig Williams; Bryan Tyler
Cc: Thorne Gregory; Melanie Bethea; Ashley Miller
Subject: RE: X2 - Enthalpy POs 3049 and 3050 Submission

When we do cans in-house we generally try to run them within two hours or at least the same day as acrolein concentrations change pretty rapidly. The same day would be my preference.

_____
Thomas Long, Mechanical Engineer
Mail Drop E343-02
Building D Room 360
109 T. W. Alexander Drive
Research Triangle Park, NC 27711
Phone: 919-541-3944

From: Craig Williams <CWilliams@css-inc.com>
Sent: Monday, April 15, 2019 3:06 PM
To: Bryan Tyler <bryan.tyler@enthalpy.com>
Cc: Thorne Gregory <thorne.gregory@enthalpy.com>; Melanie Bethea <melanie.bethea@enthalpy.com>; Ashley Miller <ashley.miller@enthalpy.com>; Long, Thomas <Long.Thomas@epa.gov>
Subject: RE: X2 - Enthalpy POs 3049 and 3050 Submission

Hi Bryan,
What is the maximum hold time for the cans after sampling before analysis? Can we return all cans at the same time on Friday?

Tom,
Would this be acceptable?

If this is acceptable Jacobs can deliver the cans to Enthalpy.

Thanks

Craig Williams

Senior Engineer
Contractor to the USEPA
CSS (Jacobs Teammate)
1910 Sedwick Road
Durham, NC 27713
Office Phone: (919) 541-0336
www.css-inc.com

From: Bryan Tyler [bryan.tyler@enthalpy.com]
Sent: Friday, April 12, 2019 3:56 PM
To: Craig Williams
Cc: Thorne Gregory; Melanie Bethea; Ashley Miller; Long, Thomas
Subject: FW: X2 - Enthalpy POs 3049 and 3050 Submission

Hi Craig,
The below supplies will be ready for 2pm delivery on Monday.
- 8 x 6L Silco canisters individually blank checked
- 3 x Soil Gas Samplers @ ~200 cc/min
- 1 x Soil Gas Samplers @ ~650 cc/min

The below supplies will be ready for 2pm delivery on Tuesday.
- 8 x 6L Silco canisters individually blank checked

Durations from Tom Long:
- 1 can – 505 seconds (use the 650 cc/min controller)
- 1 can – 1377 seconds (use the 200 cc/min controller)
- 2 cans – 505 (ambient) (use the 650 cc/min controller)

Please take a moment to provide customer feedback.

<image001.png>

Bryan Tyler
Vice President
Enthalpy Analytical, LLC
800 Capitola Drive, Suite 1
Durham, NC 27713
(919) 850-4392
bryan.tyler@enthalpy.com
www.enthalpy.com

Terms and Conditions
Enthalpy Sample Acceptance Policy

SSAS Laboratory ID: L0036, L0149 (metals only)

From: Whicker, Crystal <Crystal.whicker@jacobs.com>
Sent: Thursday, April 11, 2019 3:13 PM
To: Bryan Tyler <bryan.tyler@enthalpy.com>

Cc: Williams, Craig <CWilliams@css-inc.com>
Subject: X2 - Enthalpy POs 3049 and 3050 Submission

Hello Bryan,

Find attached Jacobs Technology purchase orders EPATP0000003049 and EPATP0000003050.
Please confirm receipt via my email – crystal.whicker@jacobs.com.

Thank you,
Crystal Whicker
Procurement Administrator
Jacobs Technology

NOTICE - This communication may contain confidential and privileged information that is for the sole use of the intended recipient. Any viewing, copying or distribution of, or reliance on this message by unintended recipients is strictly prohibited. If you have received this message in error, please notify us immediately by replying to the message and deleting it from your computer.

CONFIDENTIALITY NOTICE: The contents of this email message and any attachments are intended solely for the addressee(s) and may contain confidential, proprietary and/or privileged information and may be legally protected from disclosure. If you are not the intended recipient of this message or their agent, or if this message has been addressed to you in error, please immediately alert the sender by reply email and then delete this message and any attachments and the reply from your system. If you are not the intended recipient, you are hereby notified that any disclosure, use, dissemination, copying, or storage of this message or its attachments is strictly prohibited.

NOTICE - This communication may contain confidential and privileged information that is for the sole use of the intended recipient. Any viewing, copying or distribution of, or reliance on this message by unintended recipients is strictly prohibited. If you have received this message in error, please notify us immediately by replying to the message and deleting it from your computer.

CONFIDENTIALITY NOTICE: The contents of this email message and any attachments are intended solely for the addressee(s) and may contain confidential, proprietary and/or privileged information and may be legally protected from disclosure. If you are not the intended recipient of this message or their agent, or if this message has been addressed to you in error, please immediately alert the sender by reply email and then delete this message and any attachments and the reply from your system. If you are not the intended recipient, you are hereby notified that any disclosure, use, dissemination, copying, or storage of this message or its attachments is strictly prohibited.

CONFIDENTIALITY NOTICE: The contents of this email message and any attachments are intended solely for the addressee(s) and may contain confidential, proprietary and/or privileged information and may be legally protected from disclosure. If you are not the intended recipient of this message or their agent, or if this message has been addressed to you in error, please immediately alert the sender by reply email and then delete this message and any attachments and the reply from your system. If you are not the intended recipient, you are hereby notified that any disclosure, use, dissemination, copying, or storage of this message or its attachments is strictly prohibited.

CONFIDENTIALITY NOTICE: The contents of this email message and any attachments are intended solely for the addressee(s) and may contain confidential, proprietary and/or privileged information and may be legally protected from disclosure. If you are not the intended recipient of this message or their agent, or if this message has been addressed to you in error, please immediately alert the sender by reply email and then delete this message and any attachments and the reply from your system. If you are not the intended recipient, you are hereby notified that any disclosure, use, dissemination, copying, or storage of this message or its attachments is strictly prohibited.

CONFIDENTIALITY NOTICE: The contents of this email message and any attachments are intended solely for the addressee(s) and may contain confidential, proprietary and/or privileged information and may be legally protected from disclosure. If you are

not the intended recipient of this message or their agent, or if this message has been addressed to you in error, please immediately alert the sender by reply email and then delete this message and any attachments and the reply from your system. If you are not the intended recipient, you are hereby notified that any disclosure, use, dissemination, copying, or storage of this message or its attachments is strictly prohibited.

CONFIDENTIALITY NOTICE: The contents of this email message and any attachments are intended solely for the addressee(s) and may contain confidential, proprietary and/or privileged information and may be legally protected from disclosure. If you are not the intended recipient of this message or their agent, or if this message has been addressed to you in error, please immediately alert the sender by reply email and then delete this message and any attachments and the reply from your system. If you are not the intended recipient, you are hereby notified that any disclosure, use, dissemination, copying, or storage of this message or its attachments is strictly prohibited.

CONFIDENTIALITY NOTICE: The contents of this email message and any attachments are intended solely for the addressee(s) and may contain confidential, proprietary and/or privileged information and may be legally protected from disclosure. If you are not the intended recipient of this message or their agent, or if this message has been addressed to you in error, please immediately alert the sender by reply email and then delete this message and any attachments and the reply from your system. If you are not the intended recipient, you are hereby notified that any disclosure, use, dissemination, copying, or storage of this message or its attachments is strictly prohibited.

CONFIDENTIALITY NOTICE: The contents of this email message and any attachments are intended solely for the addressee(s) and may contain confidential, proprietary and/or privileged information and may be legally protected from disclosure. If you are not the intended recipient of this message or their agent, or if this message has been addressed to you in error, please immediately alert the sender by reply email and then delete this message and any attachments and the reply from your system. If you are not the intended recipient, you are hereby notified that any disclosure, use, dissemination, copying, or storage of this message or its attachments is strictly prohibited.

CONFIDENTIALITY NOTICE: The contents of this email message and any attachments are intended solely for the addressee(s) and may contain confidential, proprietary and/or privileged information and may be legally protected from disclosure. If you are not the intended recipient of this message or their agent, or if this message has been addressed to you in error, please immediately alert the sender by reply email and then delete this message and any attachments and the reply from your system. If you are not the intended recipient, you are hereby notified that any disclosure, use, dissemination, copying, or storage of this message or its attachments is strictly prohibited.

CONFIDENTIALITY NOTICE: The contents of this email message and any attachments are intended solely for the addressee(s) and may contain confidential, proprietary and/or privileged information and may be legally protected from disclosure. If you are not the intended recipient of this message or their agent, or if this message has been addressed to you in error, please immediately alert the sender by reply email and then delete this message and any attachments and the reply from your system. If you are not the intended recipient, you are hereby notified that any disclosure, use, dissemination, copying, or storage of this message or its attachments is strictly prohibited.

CONFIDENTIALITY NOTICE: The contents of this email message and any attachments are intended solely for the addressee(s) and may contain confidential, proprietary and/or privileged information and may be legally protected from disclosure. If you are not the intended recipient of this message or their agent, or if this message has been addressed to you in error, please immediately alert the sender by reply email and then delete this message and any attachments and the reply from your system. If you are not the intended recipient, you are hereby notified that any disclosure, use, dissemination, copying, or storage of this message or its attachments is strictly prohibited.

CONFIDENTIALITY NOTICE: The contents of this email message and any attachments are intended solely for the addressee(s) and may contain confidential, proprietary and/or privileged information and may be legally protected from disclosure. If you are not the intended recipient of this message or their agent, or if this message has been addressed to you in error, please immediately alert the sender by reply email and then delete this message and any attachments and the reply from your system. If you are not the intended recipient, you are hereby notified that any disclosure, use, dissemination, copying, or storage of this message or its attachments is strictly prohibited.

CONFIDENTIALITY NOTICE: The contents of this email message and any attachments are intended solely for the addressee(s) and may contain confidential, proprietary and/or privileged information and may be legally protected from disclosure. If you are not the intended recipient of this message or their agent, or if this message has been addressed to you in error, please immediately alert the sender by reply email and then delete this message and any attachments and the reply from your system. If you are not the intended recipient, you are hereby notified that any disclosure, use, dissemination, copying, or storage of this message or its attachments is strictly prohibited.

CONFIDENTIALITY NOTICE: The contents of this email message and any attachments are intended solely for the addressee(s) and may contain confidential, proprietary and/or privileged information and may be legally protected from disclosure. If you are not the intended recipient of this message or their agent, or if this message has been addressed to you in error, please immediately alert the sender by reply email and then delete this message and any attachments and the reply from your system. If you are not the intended recipient, you are hereby notified that any disclosure, use, dissemination, copying, or storage of this message or its attachments is strictly prohibited.

CONFIDENTIALITY NOTICE: The contents of this email message and any attachments are intended solely for the addressee(s) and may contain confidential, proprietary and/or privileged information and may be legally protected from disclosure. If you are not the intended recipient of this message or their agent, or if this message has been addressed to you in error, please immediately alert the sender by reply email and then delete this message and any attachments and the reply from your system. If you are not the intended recipient, you are hereby notified that any disclosure, use, dissemination, copying, or storage of this message or its attachments is strictly prohibited.

CONFIDENTIALITY NOTICE: The contents of this email message and any attachments are intended solely for the addressee(s) and may contain confidential, proprietary and/or privileged information and may be legally protected from disclosure. If you are not the intended recipient of this message or their agent, or if this message has been addressed to you in error, please immediately alert the sender by reply email and then delete this message and any attachments and the reply from your system. If you are not the intended recipient, you are hereby notified that any disclosure, use, dissemination, copying, or storage of this message or its attachments is strictly prohibited.

CONFIDENTIALITY NOTICE: The contents of this email message and any attachments are intended solely for the addressee(s) and may contain confidential, proprietary and/or privileged information and may be legally protected from disclosure. If you are not the intended recipient of this message or their agent, or if this message has been addressed to you in error, please immediately alert the sender by reply email and then delete this message and any attachments and the reply from your system. If you are not the intended recipient, you are hereby notified that any disclosure, use, dissemination, copying, or storage of this message or its attachments is strictly prohibited.

Message

From: Long, Thomas [/O=EXCHANGELABS/OU=EXCHANGE ADMINISTRATIVE GROUP (FYDIBOHF23SPDLT)/CN=RECIPIENTS/CN=8C6A9FA4371E4E3682E45E51082A8FE9-THOMAS, LONG]
Sent: 4/9/2019 4:31:10 PM
To: Hoyer, Marion [hoyer.marion@epa.gov]; Cook, Rich [Cook.Rich@epa.gov]; Geidosch, Justine [Geidosch.Justine@epa.gov]
CC: Shores, Richard [Shores.Richard@epa.gov]
Subject: EtO funding

Please write the PR for Contract EP-C-15-008, Work Assignment 4-034. I am in class all day, but will check my email when I come in tomorrow at 6:30.

_____
Thomas Long, Mechanical Engineer
Mail Drop E343-02
Building D Room 360
109 T. W. Alexander Drive
Research Triangle Park, NC 27711
Phone: 919-541-3944

From: Long, Thomas
Sent: Tuesday, April 09, 2019 12:15 PM
To: Harris, Robin <Harris.Robin@epa.gov>
Cc: Hoyer, Marion <hoyer.marion@epa.gov>; Cook, Rich <Cook.Rich@epa.gov>; Geidosch, Justine <Geidosch.Justine@epa.gov>
Subject: EtO WA Mod PR coming from OTAQ

Robin,

Please be advised that OTAQ has requested additional analyses to be performed than covered in the original scope of my Work Assignment 4-034. They will be sending you a PR with funding to be placed on a DCN for contract EP-C-15-008 and Work Assignment 4-034. I will submit an amended PWS in a separate email. Since we hope to take these samples next week, please let me know if there are any issues with this approach as soon as possible. Thank you.

_____
Thomas Long, Mechanical Engineer
Mail Drop E343-02
Building D Room 360
109 T. W. Alexander Drive
Research Triangle Park, NC 27711
Phone: 919-541-3944

Message

From: Long, Thomas [/O=EXCHANGELABS/OU=EXCHANGE ADMINISTRATIVE GROUP (FYDIBOHF23SPDLT)/CN=RECIPIENTS/CN=8C6A9FA4371E4E3682E45E51082A8FE9-THOMAS, LONG]
Sent: 5/3/2019 12:12:20 PM
To: Williams, Craig [williams.craig@epa.gov]
Subject: RE: X2 - Enthalpy POs 3049 and 3050 Submission

Craig,

After completing TO-15, Enthalpy will have identified the seven cans with vehicle emissions. Of those seven cans, instead of running can 113744-0039 going for a lower detection limit, please ask them to use can 113747-0096 as one of the six. Thanks.

_____

Thomas Long, Mechanical Engineer
Mail Drop E343-02
Building D Room 360
109 T. W. Alexander Drive
Research Triangle Park, NC 27711
Phone: 919-541-3944

From: Bryan Tyler <bryan.tyler@enthalpy.com>
Sent: Thursday, May 02, 2019 6:12 PM
To: Craig Williams <CWilliams@css-inc.com>; Ashley Miller <ashley.miller@enthalpy.com>
Cc: Thorne Gregory <thorne.gregory@enthalpy.com>; Melanie Bethea <melanie.bethea@enthalpy.com>; Long, Thomas <Long.Thomas@epa.gov>
Subject: RE: X2 - Enthalpy POs 3049 and 3050 Submission

Craig,
This is my fault – sorry for the delay on my response. We are currently running the TO-15 analyses over the next 2 days and the Ethylene oxide analyses will run early next week. I am going to talk with our teams in the morning to get delivery times on this data.

I apologize this report is going to be late.

Bryan

Please take a moment to provide customer feedback.

ENTHALPY ANALYTICAL

Bryan Tyler
Vice President
Enthalpy Analytical, LLC
800 Capitola Drive, Suite 1
Durham, NC 27713
(919) 850-4392
bryan.tyler@enthalpy.com
www.enthalpy.com

Terms and Conditions

Enthalpy Sample Acceptance Policy

SSAS Laboratory ID: L0036, L0149 (metals only)

From: Craig Williams <CWilliams@css-inc.com>
Sent: Thursday, May 2, 2019 12:18 PM
To: Bryan Tyler <bryan.tyler@enthalpy.com>; Ashley Miller <ashley.miller@enthalpy.com>
Cc: Thorne Gregory <thorne.gregory@enthalpy.com>; Melanie Bethea <melanie.bethea@enthalpy.com>; Long, Thomas <Long.Thomas@epa.gov>
Subject: RE: X2 - Enthalpy POs 3049 and 3050 Submission

Hi Byran,
Can you please elaborate and provide an update by COB today?

Thanks,

Craig Williams
Senior Engineer
Contractor to the USEPA
CSS (Jacobs Teammate)
1910 Sedwick Road
Durham, NC 27713
Office Phone: (919) 541-0336
www.css-inc.com

From: Bryan Tyler [bryan.tyler@enthalpy.com]
Sent: Wednesday, May 01, 2019 2:55 PM
To: Craig Williams; Ashley Miller
Cc: Thorne Gregory; Melanie Bethea; Long, Thomas
Subject: RE: X2 - Enthalpy POs 3049 and 3050 Submission

Craig,
We have had some headwinds with this project – I will update you tonight/in the morning.

Bryan

Please take a moment to provide customer feedback.

ENTHALPY ANALYTICAL

Bryan Tyler
Vice President
Enthalpy Analytical, LLC
800 Capitola Drive, Suite 1
Durham, NC 27713
(919) 850-4392
bryan.tyler@enthalpy.com
www.enthalpy.com

Terms and Conditions
Enthalpy Sample Acceptance Policy

SSAS Laboratory ID: L0036, L0149 (metals only)

From: Craig Williams <CWilliams@css-inc.com>
Sent: Wednesday, May 1, 2019 10:03 AM
To: Bryan Tyler <bryan.tyler@enthalpy.com>; Ashley Miller <ashley.miller@enthalpy.com>
Cc: Thorne Gregory <thorne.gregory@enthalpy.com>; Melanie Bethea <melanie.bethea@enthalpy.com>; Long, Thomas <Long.Thomas@epa.gov>
Subject: RE: X2 - Enthalpy POs 3049 and 3050 Submission

Hi Bryan,
Just checking if all is going OK and on schedule.

Thanks

Craig Williams
Senior Engineer
Contractor to the USEPA
CSS (Jacobs Teammate)
1910 Sedwick Road
Durham, NC 27713
Office Phone: (919) 541-0336
www.css-inc.com

From: Bryan Tyler [bryan.tyler@enthalpy.com]
Sent: Tuesday, April 23, 2019 12:46 PM
To: Craig Williams; Ashley Miller
Cc: Thorne Gregory; Melanie Bethea; Long, Thomas
Subject: RE: X2 - Enthalpy POs 3049 and 3050 Submission

Samples have been received and are logged into the lab. Sample analysis will start later (keep in mind there are 4 separate analyses required) this week into next, final reports should be to you by COB next Friday 5/3.

Thanks,
Bryan

Please take a moment to provide customer feedback.

ENTHALPY ANALYTICAL

Bryan Tyler
Vice President
Enthalpy Analytical, LLC
800 Capitola Drive, Suite 1
Durham, NC 27713
(919) 850-4392
bryan.tyler@enthalpy.com
www.enthalpy.com

Terms and Conditions
Enthalpy Sample Acceptance Policy

SSAS Laboratory ID: L0036, L0149 (metals only)

From: Craig Williams <CWilliams@css-inc.com>
Sent: Tuesday, April 23, 2019 12:43 PM
To: Ashley Miller <ashley.miller@enthalpy.com>; Bryan Tyler <bryan.tyler@enthalpy.com>
Cc: Thorne Gregory <thorne.gregory@enthalpy.com>; Melanie Bethea <melanie.bethea@enthalpy.com>; Long, Thomas <Long.Thomas@epa.gov>
Subject: RE: X2 - Enthalpy POs 3049 and 3050 Submission

Hi Bryan and Ashley,
Can you please provide an update on the TO-15, EPA Method 3C, and EtO analysis and an estimate of when you will provide the results?

Thanks,

Craig Williams
Senior Engineer
Contractor to the USEPA
CSS (Jacobs Teammate)
1910 Sedwick Road
Durham, NC 27713
Office Phone: (919) 541-0336
www.css-inc.com

From: Ashley Miller [ashley.miller@enthalpy.com]
Sent: Wednesday, April 17, 2019 3:39 PM
To: Craig Williams; Melanie Bethea; Long, Thomas
Cc: Bryan Tyler; Thorne Gregory
Subject: RE: X2 - Enthalpy POs 3049 and 3050 Submission

Craig-

That will work fine. We can hold them until the rest arrive.

Please take a moment to provide customer feedback.

ENTHALPY ANALYTICAL

Ashley Miller
Senior Project Manager
Enthalpy Analytical, LLC
800 Capitola Drive, Suite 1
Durham, NC 27713
(919) 850-4392
ashley.miller@enthalpy.com
www.enthalpy.com

Terms and Conditions
Enthalpy Sample Acceptance Policy
SSAS Laboratory ID: L0036, L0149 (metals only)

From: Craig Williams <CWilliams@css-inc.com>
Sent: Wednesday, April 17, 2019 3:33 PM
To: Ashley Miller <ashley.miller@enthalpy.com>; Melanie Bethea <melanie.bethea@enthalpy.com>; Long, Thomas <Long.Thomas@epa.gov>
Cc: Bryan Tyler <bryan.tyler@enthalpy.com>; Thorne Gregory <thorne.gregory@enthalpy.com>
Subject: RE: X2 - Enthalpy POs 3049 and 3050 Submission

Daniel may bring a couple boxes of SUMMA cans with chain of custody forms when he picks up the controller. Is this OK? We'd bring the remaining cans over on Friday.

Craig Williams
Senior Engineer
Contractor to the USEPA
CSS (Jacobs Teammate)
1910 Sedwick Road
Durham, NC 27713
Office Phone: (919) 541-0336
www.css-inc.com

From: Ashley Miller [ashley.miller@enthalpy.com]
Sent: Wednesday, April 17, 2019 3:17 PM
To: Craig Williams; Melanie Bethea; Long, Thomas
Cc: Bryan Tyler; Thorne Gregory
Subject: RE: X2 - Enthalpy POs 3049 and 3050 Submission

Hi Craig-

Yes I will be here. I will plan to see him tomorrow. Thanks!

Please take a moment to provide customer feedback.

ENTHALPY ANALYTICAL

Ashley Miller
Senior Project Manager
Enthalpy Analytical, LLC
800 Capitola Drive, Suite 1
Durham, NC 27713
(919) 850-4392
ashley.miller@enthalpy.com
www.enthalpy.com

Terms and Conditions
Enthalpy Sample Acceptance Policy
SSAS Laboratory ID: L0036, L0149 (metals only)

From: Craig Williams <CWilliams@css-inc.com>
Sent: Wednesday, April 17, 2019 3:15 PM
To: Ashley Miller <ashley.miller@enthalpy.com>; Melanie Bethea <melanie.bethea@enthalpy.com>; Long, Thomas <Long.Thomas@epa.gov>
Cc: Bryan Tyler <bryan.tyler@enthalpy.com>; Thorne Gregory <thorne.gregory@enthalpy.com>
Subject: RE: X2 - Enthalpy POs 3049 and 3050 Submission

Will you be there as the contact person?

Craig

Craig Williams
Senior Engineer
Contractor to the USEPA
CSS (Jacobs Teammate)
1910 Sedwick Road
Durham, NC 27713
Office Phone: (919) 541-0336
www.css-inc.com

From: Craig Williams
Sent: Wednesday, April 17, 2019 3:13 PM
To: Ashley Miller; Melanie Bethea; Long, Thomas
Cc: Bryan Tyler; Thorne Gregory
Subject: RE: X2 - Enthalpy POs 3049 and 3050 Submission

Ashley,
Daniel Janek from Jacobs will pick up the controller and plans to be there at 8:00.

Craig

Craig Williams
Senior Engineer
Contractor to the USEPA
CSS (Jacobs Teammate)
1910 Sedwick Road
Durham, NC 27713
Office Phone: (919) 541-0336
www.css-inc.com

From: Ashley Miller [ashley.miller@enthalpy.com]
Sent: Wednesday, April 17, 2019 2:53 PM
To: Craig Williams; Melanie Bethea; Long, Thomas
Cc: Bryan Tyler; Thorne Gregory
Subject: RE: X2 - Enthalpy POs 3049 and 3050 Submission

Craig-

Yes anytime after 8 am will work fine. Thanks!

Please take a moment to provide customer feedback.

ENTHALPY
ANALYTICAL

Ashley Miller
Senior Project Manager
Enthalpy Analytical, LLC
800 Capitola Drive, Suite 1
Durham, NC 27713
(919) 850-4392
ashley.miller@enthalpy.com
www.enthalpy.com

Terms and Conditions
Enthalpy Sample Acceptance Policy
SSAS Laboratory ID: L0036, L0149 (metals only)

From: Craig Williams <CWilliams@css-inc.com>
Sent: Wednesday, April 17, 2019 2:49 PM
To: Ashley Miller <ashley.miller@enthalpy.com>; Melanie Bethea <melanie.bethea@enthalpy.com>; Long, Thomas <Long.Thomas@epa.gov>
Cc: Bryan Tyler <bryan.tyler@enthalpy.com>; Thorne Gregory <thorne.gregory@enthalpy.com>
Subject: RE: X2 - Enthalpy POs 3049 and 3050 Submission

Yes, understood. The controller will not have been blank checked. Is it OK to send someone over early tomorrow morning?

Craig Williams
Senior Engineer
Contractor to the USEPA
CSS (Jacobs Teammate)
1910 Sedwick Road
Durham, NC 27713
Office Phone: (919) 541-0336
www.css-inc.com

From: Ashley Miller [ashley.miller@enthalpy.com]
Sent: Wednesday, April 17, 2019 2:45 PM
To: Craig Williams; Melanie Bethea; Long, Thomas
Cc: Bryan Tyler; Thorne Gregory
Subject: RE: X2 - Enthalpy POs 3049 and 3050 Submission

Hi Craig-

Just to confirm, the controller will not be blank-checked via GC/MS. It has been purging for quite some time so there is no reason to think there would be contamination, but just wanted to clarify that we will not have the instrument back up and running to be able to blank check prior to pickup.

Please take a moment to provide customer feedback.

ENTHALPY
ANALYTICAL

Ashley Miller
Senior Project Manager
Enthalpy Analytical, LLC
800 Capitola Drive, Suite 1
Durham, NC 27713
(919) 850-4392
ashley.miller@enthalpy.com
www.enthalpy.com

Terms and Conditions
Enthalpy Sample Acceptance Policy
SSAS Laboratory ID: L0036, L0149 (metals only)

From: Craig Williams <CWilliams@css-inc.com>
Sent: Wednesday, April 17, 2019 12:49 PM
To: Melanie Bethea <melanie.bethea@enthalpy.com>; Ashley Miller <ashley.miller@enthalpy.com>; Long, Thomas <Long.Thomas@epa.gov>
Cc: Bryan Tyler <bryan.tyler@enthalpy.com>; Thorne Gregory <thorne.gregory@enthalpy.com>
Subject: RE: X2 - Enthalpy POs 3049 and 3050 Submission

Hi Melanie,
We can send someone over first thing tomorrow morning to pick up the controller. Is that OK? What time will it be available?

Craig Williams
Senior Engineer
Contractor to the USEPA
CSS (Jacobs Teammate)
1910 Sedwick Road
Durham, NC 27713
Office Phone: (919) 541-0336
www.css-inc.com

From: Melanie Bethea [melanie.bethea@enthalpy.com]
Sent: Wednesday, April 17, 2019 11:12 AM
To: Ashley Miller; Craig Williams; Long, Thomas
Cc: Bryan Tyler; Thorne Gregory
Subject: RE: X2 - Enthalpy POs 3049 and 3050 Submission

Good Morning,

The requested controller has been purging with nitrogen for 18+ hours. We will not be able to blank check the controller today as the instruments is still coming on line.

Please let us know how you would like to proceed.

Thank you,
Melanie

Please take a moment to provide customer feedback.

ENTHALPY
ANALYTICAL

Melanie Bethea
Operations Manager
Enthalpy Analytical, LLC
800 Capitola Drive, Suite 1
Durham, NC 27713
(919) 850.4392
melanie.bethea@enthalpy.com
www.enthalpy.com

Terms and Conditions
Enthalpy Sample Acceptance Policy

SSAS Laboratory ID: L0036, L0149 (metals only)

From: Ashley Miller <ashley.miller@enthalpy.com>
Sent: Tuesday, April 16, 2019 2:37 PM
To: Craig Williams <CWilliams@css-inc.com>; Long, Thomas <Long.Thomas@epa.gov>
Cc: Bryan Tyler <bryan.tyler@enthalpy.com>; Thorne Gregory <thorne.gregory@enthalpy.com>; Melanie Bethea <melanie.bethea@enthalpy.com>
Subject: RE: X2 - Enthalpy POs 3049 and 3050 Submission

Understood. If things improve I will reach out. Thanks for your patience!

Please take a moment to provide customer feedback.

ENTHALPY ANALYTICAL

Ashley Miller
Senior Project Manager
Enthalpy Analytical, LLC
800 Capitola Drive, Suite 1
Durham, NC 27713
(919) 850-4392
ashley.miller@enthalpy.com
www.enthalpy.com

Terms and Conditions
Enthalpy Sample Acceptance Policy
SSAS Laboratory ID: L0036, L0149 (metals only)

From: Craig Williams <CWilliams@css-inc.com>
Sent: Tuesday, April 16, 2019 2:35 PM
To: Ashley Miller <ashley.miller@enthalpy.com>; Long, Thomas <Long.Thomas@epa.gov>
Cc: Bryan Tyler <bryan.tyler@enthalpy.com>; Thorne Gregory <thorne.gregory@enthalpy.com>; Melanie Bethea <melanie.bethea@enthalpy.com>
Subject: RE: X2 - Enthalpy POs 3049 and 3050 Submission

Hi Ashley,
I would like to hold off in the hopes that your instrument is back up and running tomorrow. I'll check back around 2:00 tomorrow.

I appreciate your effort.

Thanks,

Craig Williams
Senior Engineer
Contractor to the USEPA
CSS (Jacobs Teammate)
1910 Sedwick Road
Durham, NC 27713
Office Phone: (919) 541-0336
www.css-inc.com

From: Ashley Miller [ashley.miller@enthalpy.com]
Sent: Tuesday, April 16, 2019 2:15 PM
To: Craig Williams; Long, Thomas
Cc: Bryan Tyler; Thorne Gregory; Melanie Bethea
Subject: RE: X2 - Enthalpy POs 3049 and 3050 Submission

Hi Craig and Thomas-

Sorry to deliver sad news, but our instrument is down and will not be back up before tomorrow. Please let me know if you would like the additional controller, or if you would like to wait until we get the instrument back up and can blank check it. Please note, I can't guarantee we will be back up and running by any certain time tomorrow.

Sorry for the bad news. Let me know how to proceed. Thanks!

Please take a moment to provide customer feedback.

ENTHALPY ANALYTICAL

Ashley Miller
Senior Project Manager
Enthalpy Analytical, LLC
800 Capitola Drive, Suite 1
Durham, NC 27713
(919) 850-4392
ashley.miller@enthalpy.com
www.enthalpy.com

Terms and Conditions
Enthalpy Sample Acceptance Policy
SSAS Laboratory ID: L0036, L0149 (metals only)

From: Craig Williams <CWilliams@css-inc.com>
Sent: Tuesday, April 16, 2019 1:03 PM
To: Long, Thomas <Long.Thomas@epa.gov>
Cc: Ashley Miller <ashley.miller@enthalpy.com>; Bryan Tyler <bryan.tyler@enthalpy.com>; Thorne Gregory <thorne.gregory@enthalpy.com>; Melanie Bethea <melanie.bethea@enthalpy.com>
Subject: Re: X2 - Enthalpy POs 3049 and 3050 Submission

Hi Ashley,
Thanks. It's important for us that it's blank checked. I can pick it up in the morning if you're able to have it ready and blank checked. Please let me know.

Thanks

Sent from my iPhone

On Apr 16, 2019, at 12:56 PM, Long, Thomas <Long.Thomas@epa.gov> wrote:

If we sent someone over at 8 am tomorrow to pick it up could we get one that had been blank checked?

_____
Thomas Long, Mechanical Engineer

Mail Drop E343-02
Building D Room 360
109 T. W. Alexander Drive
Research Triangle Park, NC 27711
Phone: 919-541-3944

From: Ashley Miller <ashley.miller@enthalpy.com>
Sent: Tuesday, April 16, 2019 12:51 PM
To: Craig Williams <CWilliams@css-inc.com>; Bryan Tyler <bryan.tyler@enthalpy.com>; Long, Thomas <Long.Thomas@epa.gov>
Cc: Thorne Gregory <thorne.gregory@enthalpy.com>; Melanie Bethea <melanie.bethea@enthalpy.com>
Subject: RE: X2 - Enthalpy POs 3049 and 3050 Submission

Hi Craig-

We can build another flow controller, but we will not be able to blank check it. If you guys are ok with using a flow controller that has not been blank-checked then I can have it over to you with the rest of the equipment this afternoon. It is very unlikely that this would result in any sort of contamination, and we are confident that the flow controller would be usable without concern as-is.

Let me know if this is acceptable, and I'll have it to you today. Thanks!

Please take a moment to provide customer feedback.

<image001.png>

Ashley Miller
Senior Project Manager
Enthalpy Analytical, LLC
800 Capitola Drive, Suite 1
Durham, NC 27713
(919) 850-4392
ashley.miller@enthalpy.com
www.enthalpy.com

Terms and Conditions
Enthalpy Sample Acceptance Policy
SSAS Laboratory ID: L0036, L0149 (metals only)

From: Craig Williams <CWilliams@css-inc.com>
Sent: Tuesday, April 16, 2019 12:28 PM
To: Ashley Miller <ashley.miller@enthalpy.com>; Bryan Tyler <bryan.tyler@enthalpy.com>; Long, Thomas <Long.Thomas@epa.gov>
Cc: Thorne Gregory <thorne.gregory@enthalpy.com>; Melanie Bethea <melanie.bethea@enthalpy.com>
Subject: RE: X2 - Enthalpy POs 3049 and 3050 Submission

Hi Ashley,
Thank you very much. Please let me know if it will be coming with the cans that Enthalpy's delivering today.

Craig

Craig Williams

Senior Engineer
Contractor to the USEPA
CSS (Jacobs Teammate)
1910 Sedwick Road
Durham, NC 27713
Office Phone: (919) 541-0336
www.css-inc.com

From: Ashley Miller [ashley.miller@enthalpy.com]
Sent: Tuesday, April 16, 2019 12:00 PM
To: Craig Williams; Bryan Tyler; Long, Thomas
Cc: Thorne Gregory; Melanie Bethea
Subject: RE: X2 - Enthalpy POs 3049 and 3050 Submission

Craig-

We are checking to see if we have another 200cc/min flow controller. I will be in touch soon.

Please take a moment to provide customer feedback.

<image001.png>

Ashley Miller
Senior Project Manager
Enthalpy Analytical, LLC
800 Capitola Drive, Suite 1
Durham, NC 27713
(919) 850-4392
ashley.miller@enthalpy.com
www.enthalpy.com

Terms and Conditions
Enthalpy Sample Acceptance Policy
SSAS Laboratory ID: L0036, L0149 (metals only)

From: Craig Williams <CWilliams@css-inc.com>
Sent: Tuesday, April 16, 2019 11:49 AM
To: Bryan Tyler <bryan.tyler@enthalpy.com>; Long, Thomas <Long.Thomas@epa.gov>
Cc: Thorne Gregory <thorne.gregory@enthalpy.com>; Melanie Bethea <melanie.bethea@enthalpy.com>; Ashley Miller <ashley.miller@enthalpy.com>
Subject: RE: X2 - Enthalpy POs 3049 and 3050 Submission

Bryan,
Tom says that he's short an orifice for the spiked can. Please send a 1377 sec/180 flow for the spiked can today.

Craig Williams
Senior Engineer
Contractor to the USEPA
CSS (Jacobs Teammate)
1910 Sedwick Road
Durham, NC 27713
Office Phone: (919) 541-0336
www.css-inc.com

From: Craig Williams
Sent: Tuesday, April 16, 2019 8:44 AM
To: Bryan Tyler; Long, Thomas
Cc: Thorne Gregory; Melanie Bethea; Ashley Miller
Subject: RE: X2 - Enthalpy POs 3049 and 3050 Submission

Hi Bryan,
I talked to Tom this morning and the answer from Jacobs and EPA is yes, running the samples after all have been received by Enthalpy is OK.

Thanks.

Craig Williams
Senior Engineer
Contractor to the USEPA
CSS (Jacobs Teammate)
1910 Sedwick Road
Durham, NC 27713
Office Phone: (919) 541-0336
www.css-inc.com

From: Bryan Tyler [bryan.tyler@enthalpy.com]
Sent: Monday, April 15, 2019 4:04 PM
To: Craig Williams; Long, Thomas
Cc: Thorne Gregory; Melanie Bethea; Ashley Miller
Subject: RE: X2 - Enthalpy POs 3049 and 3050 Submission

Hi All,
We will not run the samples until they are all received...with this schedule sample analysis will commence on 4/22.

Does this work for Jacobs/EPA?

Please take a moment to provide customer feedback.

<image001.png>

Bryan Tyler
Vice President
Enthalpy Analytical, LLC
800 Capitola Drive, Suite 1
Durham, NC 27713
(919) 850-4392
bryan.tyler@enthalpy.com
www.enthalpy.com

Terms and Conditions
Enthalpy Sample Acceptance Policy

SSAS Laboratory ID: L0036, L0149 (metals only)

From: Craig Williams <CWilliams@css-inc.com>
Sent: Monday, April 15, 2019 3:59 PM
To: Long, Thomas <Long.Thomas@epa.gov>; Bryan Tyler <bryan.tyler@enthalpy.com>

Cc: Thorne Gregory <thorne.gregory@enthalpy.com>; Melanie Bethea <melanie.bethea@enthalpy.com>; Ashley Miller <ashley.miller@enthalpy.com>
Subject: RE: X2 - Enthalpy POs 3049 and 3050 Submission

Hi Tom,
Enthalpy is only 5 minutes away. I think Jacobs can arrange for someone to drive the samples over tomorrow. Are you proposing taking them all at the end of the day or more frequent?

Craig Williams
Senior Engineer
Contractor to the USEPA
CSS (Jacobs Teammate)
1910 Sedwick Road
Durham, NC 27713
Office Phone: (919) 541-0336
www.css-inc.com

From: Long, Thomas [Long.Thomas@epa.gov]
Sent: Monday, April 15, 2019 3:14 PM
To: Craig Williams; Bryan Tyler
Cc: Thorne Gregory; Melanie Bethea; Ashley Miller
Subject: RE: X2 - Enthalpy POs 3049 and 3050 Submission

When we do cans in-house we generally try to run them within two hours or at least the same day as acrolein concentrations change pretty rapidly. The same day would be my preference.

Thomas Long, Mechanical Engineer
Mail Drop E343-02
Building D Room 360
109 T. W. Alexander Drive
Research Triangle Park, NC 27711
Phone: 919-541-3944

From: Craig Williams <CWilliams@css-inc.com>
Sent: Monday, April 15, 2019 3:06 PM
To: Bryan Tyler <bryan.tyler@enthalpy.com>
Cc: Thorne Gregory <thorne.gregory@enthalpy.com>; Melanie Bethea <melanie.bethea@enthalpy.com>; Ashley Miller <ashley.miller@enthalpy.com>; Long, Thomas <Long.Thomas@epa.gov>
Subject: RE: X2 - Enthalpy POs 3049 and 3050 Submission

Hi Bryan,
What is the maximum hold time for the cans after sampling before analysis? Can we return all cans at the same time on Friday?

Tom,
Would this be acceptable?

If this is acceptable Jacobs can deliver the cans to Enthalpy.

Thanks

Craig Williams
Senior Engineer
Contractor to the USEPA
CSS (Jacobs Teammate)
1910 Sedwick Road

Durham, NC 27713
Office Phone: (919) 541-0336
www.css-inc.com

From: Bryan Tyler [bryan.tyler@enthalpy.com]
Sent: Friday, April 12, 2019 3:56 PM
To: Craig Williams
Cc: Thorne Gregory; Melanie Bethea; Ashley Miller; Long, Thomas
Subject: FW: X2 - Enthalpy POs 3049 and 3050 Submission

Hi Craig,
The below supplies will be ready for 2pm delivery on Monday.
- 8 x 6L Silco canisters individually blank checked
- 3 x Soil Gas Samplers @ ~200 cc/min
- 1 x Soil Gas Samplers @ ~650 cc/min

The below supplies will be ready for 2pm delivery on Tuesday.
- 8 x 6L Silco canisters individually blank checked

Durations from Tom Long:
- 1 can – 505 seconds (use the 650 cc/min controller)
- 1 can – 1377 seconds (use the 200 cc/min controller)
- 2 cans – 505 (ambient) (use the 650 cc/min controller)

Please take a moment to provide customer feedback.

<image001.png>

Bryan Tyler
Vice President
Enthalpy Analytical, LLC
800 Capitola Drive, Suite 1
Durham, NC 27713
(919) 850-4392
bryan.tyler@enthalpy.com
www.enthalpy.com

Terms and Conditions
Enthalpy Sample Acceptance Policy

SSAS Laboratory ID: L0036, L0149 (metals only)

From: Whicker, Crystal <Crystal.whicker@jacobs.com>
Sent: Thursday, April 11, 2019 3:13 PM
To: Bryan Tyler <bryan.tyler@enthalpy.com>
Cc: Williams, Craig <CWilliams@css-inc.com>
Subject: X2 - Enthalpy POs 3049 and 3050 Submission

Hello Bryan,

Find attached Jacobs Technology purchase orders EPATP0000003049 and EPATP0000003050.
Please confirm receipt via my email – crystal.whicker@jacobs.com.

Thank you,
Crystal Whicker
Procurement Administrator
Jacobs Technology

NOTICE - This communication may contain confidential and privileged information that is for the sole use of the intended recipient. Any viewing, copying or distribution of, or reliance on this message by unintended recipients is strictly prohibited. If you have received this message in error, please notify us immediately by replying to the message and deleting it from your computer.

CONFIDENTIALITY NOTICE: The contents of this email message and any attachments are intended solely for the addressee(s) and may contain confidential, proprietary and/or privileged information and may be legally protected from disclosure. If you are not the intended recipient of this message or their agent, or if this message has been addressed to you in error, please immediately alert the sender by reply email and then delete this message and any attachments and the reply from your system. If you are not the intended recipient, you are hereby notified that any disclosure, use, dissemination, copying, or storage of this message or its attachments is strictly prohibited.

NOTICE - This communication may contain confidential and privileged information that is for the sole use of the intended recipient. Any viewing, copying or distribution of, or reliance on this message by unintended recipients is strictly prohibited. If you have received this message in error, please notify us immediately by replying to the message and deleting it from your computer.

CONFIDENTIALITY NOTICE: The contents of this email message and any attachments are intended solely for the addressee(s) and may contain confidential, proprietary and/or privileged information and may be legally protected from disclosure. If you are not the intended recipient of this message or their agent, or if this message has been addressed to you in error, please immediately alert the sender by reply email and then delete this message and any attachments and the reply from your system. If you are not the intended recipient, you are hereby notified that any disclosure, use, dissemination, copying, or storage of this message or its attachments is strictly prohibited.

CONFIDENTIALITY NOTICE: The contents of this email message and any attachments are intended solely for the addressee(s) and may contain confidential, proprietary and/or privileged information and may be legally protected from disclosure. If you are not the intended recipient of this message or their agent, or if this message has been addressed to you in error, please immediately alert the sender by reply email and then delete this message and any attachments and the reply from your system. If you are not the intended recipient, you are hereby notified that any disclosure, use, dissemination, copying, or storage of this message or its attachments is strictly prohibited.

CONFIDENTIALITY NOTICE: The contents of this email message and any attachments are intended solely for the addressee(s) and may contain confidential, proprietary and/or privileged information and may be legally protected from disclosure. If you are not the intended recipient of this message or their agent, or if this message has been addressed to you in error, please immediately alert the sender by reply email and then delete this message and any attachments and the reply from your system. If you are not the intended recipient, you are hereby notified that any disclosure, use, dissemination, copying, or storage of this message or its attachments is strictly prohibited.

CONFIDENTIALITY NOTICE: The contents of this email message and any attachments are intended solely for the addressee(s) and may contain confidential, proprietary and/or privileged information and may be legally protected from disclosure. If you are not the intended recipient of this message or their agent, or if this message has been addressed to you in error, please immediately alert the sender by reply email and then delete this message and any attachments and the reply from your system. If you are not the intended recipient, you are hereby notified that any disclosure, use, dissemination, copying, or storage of this message or its attachments is strictly prohibited.

CONFIDENTIALITY NOTICE: The contents of this email message and any attachments are intended solely for the addressee(s) and may contain confidential, proprietary and/or privileged information and may be legally protected from disclosure. If you are not the intended recipient of this message or their agent, or if this message has been addressed to you in error, please immediately alert the sender by reply email and then delete this message and any attachments and the reply from your system. If you are not the intended recipient, you are hereby notified that any disclosure, use, dissemination, copying, or storage of this message or its attachments is strictly prohibited.

CONFIDENTIALITY NOTICE: The contents of this email message and any attachments are intended solely for the addressee(s) and may contain confidential, proprietary and/or privileged information and may be legally protected from disclosure. If you are not the intended recipient of this message or their agent, or if this message has been addressed to you in error, please immediately alert the sender by reply email and then delete this message and any attachments and the reply from your system. If you are not the intended recipient, you are hereby notified that any disclosure, use, dissemination, copying, or storage of this message or its attachments is strictly prohibited.

CONFIDENTIALITY NOTICE: The contents of this email message and any attachments are intended solely for the addressee(s) and may contain confidential, proprietary and/or privileged information and may be legally protected from disclosure. If you are not the intended recipient of this message or their agent, or if this message has been addressed to you in error, please immediately alert the sender by reply email and then delete this message and any attachments and the reply from your system. If you are not the intended recipient, you are hereby notified that any disclosure, use, dissemination, copying, or storage of this message or its attachments is strictly prohibited.

CONFIDENTIALITY NOTICE: The contents of this email message and any attachments are intended solely for the addressee(s) and may contain confidential, proprietary and/or privileged information and may be legally protected from disclosure. If you are not the intended recipient of this message or their agent, or if this message has been addressed to you in error, please immediately alert the sender by reply email and then delete this message and any attachments and the reply from your system. If you are not the intended recipient, you are hereby notified that any disclosure, use, dissemination, copying, or storage of this message or its attachments is strictly prohibited.

CONFIDENTIALITY NOTICE: The contents of this email message and any attachments are intended solely for the addressee(s) and may contain confidential, proprietary and/or privileged information and may be legally protected from disclosure. If you are not the intended recipient of this message or their agent, or if this message has been addressed to you in error, please immediately alert the sender by reply email and then delete this message and any attachments and the reply from your system. If you are not the intended recipient, you are hereby notified that any disclosure, use, dissemination, copying, or storage of this message or its attachments is strictly prohibited.

CONFIDENTIALITY NOTICE: The contents of this email message and any attachments are intended solely for the addressee(s) and may contain confidential, proprietary and/or privileged information and may be legally protected from disclosure. If you are not the intended recipient of this message or their agent, or if this message has been addressed to you in error, please immediately alert the sender by reply email and then delete this message and any attachments and the reply from your system. If you are not the intended recipient, you are hereby notified that any disclosure, use, dissemination, copying, or storage of this message or its attachments is strictly prohibited.

CONFIDENTIALITY NOTICE: The contents of this email message and any attachments are intended solely for the addressee(s) and may contain confidential, proprietary and/or privileged information and may be legally protected from disclosure. If you are not the intended recipient of this message or their agent, or if this message has been addressed to you in error, please immediately alert the sender by reply email and then delete this message and any attachments and the reply from your system. If you are not the intended recipient, you are hereby notified that any disclosure, use, dissemination, copying, or storage of this message or its attachments is strictly prohibited.

CONFIDENTIALITY NOTICE: The contents of this email message and any attachments are intended solely for the addressee(s) and may contain confidential, proprietary and/or privileged information and may be legally protected from disclosure. If you are not the intended recipient of this message or their agent, or if this message has been addressed to you in error, please immediately alert the sender by reply email and then delete this message and any attachments and the reply from your system. If you are not the intended recipient, you are hereby notified that any disclosure, use, dissemination, copying, or storage of this message or its attachments is strictly prohibited.

CONFIDENTIALITY NOTICE: The contents of this email message and any attachments are intended solely for the addressee(s) and may contain confidential, proprietary and/or privileged information and may be legally protected from disclosure. If you are not the intended recipient of this message or their agent, or if this message has been addressed to you in error, please

immediately alert the sender by reply email and then delete this message and any attachments and the reply from your system. If you are not the intended recipient, you are hereby notified that any disclosure, use, dissemination, copying, or storage of this message or its attachments is strictly prohibited.

CONFIDENTIALITY NOTICE: The contents of this email message and any attachments are intended solely for the addressee(s) and may contain confidential, proprietary and/or privileged information and may be legally protected from disclosure. If you are not the intended recipient of this message or their agent, or if this message has been addressed to you in error, please immediately alert the sender by reply email and then delete this message and any attachments and the reply from your system. If you are not the intended recipient, you are hereby notified that any disclosure, use, dissemination, copying, or storage of this message or its attachments is strictly prohibited.

Message

From: Long, Thomas [/O=EXCHANGELABS/OU=EXCHANGE ADMINISTRATIVE GROUP (FYDIBOHF23SPDLT)/CN=RECIPIENTS/CN=8C6A9FA4371E4E3682E45E51082A8FE9-THOMAS, LONG]
Sent: 3/4/2019 7:33:38 PM
To: Cook, Rich [Cook.Rich@epa.gov]
Subject: RE: EtO Testing

I don't know about his availability but you may also want to have Mike Hays in on the discussion.

_____
Thomas Long, Mechanical Engineer
Mail Drop E343-02
Building D Room 360
109 T. W. Alexander Drive
Research Triangle Park, NC 27711
Phone: 919-541-3944

From: Cook, Rich
Sent: Monday, March 04, 2019 2:02 PM
To: Long, Thomas <Long.Thomas@epa.gov>
Subject: RE: EtO Testing

Sounds good, who should include on your side besides you and Richard – Ingrid?

Rich Cook
Health Effects, Benefits, and Air Toxics Center
Assessment and Standards Division
Office of Transportation and Air Quality
U. S. Environmental Protection Agency
(734)214-4827

From: Long, Thomas
Sent: Monday, March 04, 2019 1:07 PM
To: Cook, Rich <Cook.Rich@epa.gov>; Shores, Richard <Shores.Richard@epa.gov>
Cc: Geidosch, Justine <Geidosch.Justine@epa.gov>; Hoyer, Marion <hoyer.marion@epa.gov>
Subject: RE: EtO Testing

Let's set something up for the week of the 18th. We'll be at CRC next week.

_____
Thomas Long, Mechanical Engineer
Mail Drop E343-02
Building D Room 360
109 T. W. Alexander Drive
Research Triangle Park, NC 27711
Phone: 919-541-3944

From: Cook, Rich
Sent: Monday, March 04, 2019 12:52 PM
To: Shores, Richard <Shores.Richard@epa.gov>; Long, Thomas <Long.Thomas@epa.gov>

Cc: Geidosch, Justine <Geidosch.Justine@epa.gov>; Hoyer, Marion <hoyer.marion@epa.gov>
Subject: EtO Testing

Richard and Tom –

We would like to have a more in depth discussion with you folks on what NRMRL might be able to do on the mobile source EtO characterization issue.

I know you mentioned you might be able to do something quick and dirty with a GDI LD truck you use for baseline testing, and with a Class 8 HD when you get the dyno back up.

We would like to talk about feasibility of maybe testing a non-GDI vehicle too, timeframe, possible cost and next steps.

Any chance we can have a conversation in the next week or so? If so, let me know dates and times when you might be available, NRMRL staff to include, and I can set something up.

Rich Cook
Health Effects, Benefits, and Air Toxics Center
Assessment and Standards Division
Office of Transportation and Air Quality
U. S. Environmental Protection Agency
(734)214-4827

Message

From: Long, Thomas [/O=EXCHANGELABS/OU=EXCHANGE ADMINISTRATIVE GROUP (FYDIBOHF23SPDLT)/CN=RECIPIENTS/CN=8C6A9FA4371E4E3682E45E51082A8FE9-THOMAS, LONG]
Sent: 10/22/2019 6:06:18 PM
To: Yelverton, Tiffany [Yelverton.Tiffany@epa.gov]
Subject: RE: spiked can for dyno testing

Thomas Long, Mechanical Engineer
Mail Drop E343-02
Building D Room 360
109 T. W. Alexander Drive
Research Triangle Park, NC 27711
Phone: 919-541-3944

From: Yelverton, Tiffany <Yelverton.Tiffany@epa.gov>
Sent: Tuesday, October 22, 2019 12:31 PM
To: Long, Thomas <Long.Thomas@epa.gov>; Kariher, Peter <Kariher.Peter@epa.gov>
Cc: Snow, Richard <Snow.Richard@epa.gov>
Subject: RE: spiked can for dyno testing

Hey Tom,

I spoke with Peter and he is going to spike a can with EtO and a couple other gases for your tests on Friday. I'm sure he can let us know the concentrations of each compound once he prepares the can. Thank you for being willing to collect a sample from your testing and have it analyzed.

Best,
Tiffany

Tiffany L. B. Yelverton, Ph.D.
Mechanical Engineer
Combustion Sources Branch
Office of Research and Development
U. S. Environmental Protection Agency
109 T. W. Alexander Drive (E305-01)
Research Triangle Park, NC 27711
919.541.9456 (office)
919.541.0554 (fax)

From: Long, Thomas <Long.Thomas@epa.gov>
Sent: Tuesday, October 22, 2019 11:53 AM
To: Yelverton, Tiffany <Yelverton.Tiffany@epa.gov>; Kariher, Peter <Kariher.Peter@epa.gov>
Cc: Snow, Richard <Snow.Richard@epa.gov>
Subject: RE: spiked can for dyno testing

We gave Peter two cans to spike per the test plan. We have a spare which could be spiked in the manner you suggest. We will need it Thursday for testing Friday. Thanks.

_____

Thomas Long, Mechanical Engineer
Mail Drop E343-02
Building D Room 360
109 T. W. Alexander Drive
Research Triangle Park, NC 27711
Phone: 919-541-3944

From: Yelverton, Tiffany <Yelverton.Tiffany@epa.gov>
Sent: Tuesday, October 22, 2019 11:51 AM
To: Long, Thomas <Long.Thomas@epa.gov>; Kariher, Peter <Kariher.Peter@epa.gov>
Subject: spiked can for dyno testing

Hey Tom,

Are you guys running on the dyno this week? I wasn't sure if the tentative schedule you shared a few weeks back was still valid, so I wanted to check in and ask. Are you still willing/able to let Peter spike a can for you that has EtO and one or more known compounds that have potential for causing interference? If I recall correctly (and that's a big IF), on the call with OTAQ earlier this month we discussed this and potentially doing this on a single can for the third day of your test series where you weren't planning to collect quite as many cans?

Best,
Tiffany

Tiffany L. B. Yelverton, Ph.D.
Mechanical Engineer
Combustion Sources Branch
Office of Research and Development
U. S. Environmental Protection Agency
109 T. W. Alexander Drive (E305-01)
Research Triangle Park, NC 27711
919.541.9456 (office)
919.541.0554 (fax)

Message

From: Long, Thomas [/O=EXCHANGELABS/OU=EXCHANGE ADMINISTRATIVE GROUP (FYDIBOHF23SPDLT)/CN=RECIPIENTS/CN=8C6A9FA4371E4E3682E45E51082A8FE9-THOMAS, LONG]
Sent: 9/23/2019 2:52:18 PM
To: Bryan Tyler [bryan.tyler@enthalpy.com]; Craig Williams [CWilliams@css-inc.com]
Subject: RE: Phase 4 results did not detect any EtO spikes

We are held up by missing parts on backorder. Craig, will let you know as soon as possible. We appreciate Enthalpy's support.

_____
Thomas Long, Mechanical Engineer
Mail Drop E343-02
Building D Room 360
109 T. W. Alexander Drive
Research Triangle Park, NC 27711
Phone: 919-541-3944

From: Bryan Tyler <bryan.tyler@enthalpy.com>
Sent: Monday, September 23, 2019 10:50 AM
To: Long, Thomas <Long.Thomas@epa.gov>; Craig Williams <CWilliams@css-inc.com>
Subject: RE: Phase 4 results did not detect any EtO spikes

I have to say good...sorry you have this issue but I was a bi nervous. I was out on Friday so I was going to tackle this today.

Thank you for confirming we need no action.

Any word on the Phase 5 testing?

Bryan Tyler
VP Environmental Laboratory Services
800-1 Capitola Dr., Durham, NC 27713
O: 919.850.4392 x12203 | M: 919.491.5145
bryan.tyler@enthalpy.com

To help protect the air we breathe, the water we drink, and the soil that feeds us.

Please take a moment to provide customer feedback
Terms and Conditions & Enthalpy Sample Acceptance Policy

From: Long, Thomas <Long.Thomas@epa.gov>
Sent: Monday, September 23, 2019 10:42 AM
To: Craig Williams <CWilliams@css-inc.com>; Bryan Tyler <bryan.tyler@enthalpy.com>
Subject: RE: Phase 4 results did not detect any EtO spikes

Bryan,

Good job on not detecting any spikes. Turns out the problem was with our gas divider so please ignore the below request which was instigated by myself. Have a good day.

Thomas Long, Mechanical Engineer
Mail Drop E343-02
Building D Room 360
109 T. W. Alexander Drive
Research Triangle Park, NC 27711
Phone: 919-541-3944

From: Craig Williams <CWilliams@css-inc.com>
Sent: Friday, September 20, 2019 11:06 AM
To: Bryan Tyler <bryan.tyler@enthalpy.com>
Cc: Long, Thomas <Long.Thomas@epa.gov>
Subject: Phase 4 results did not detect any EtO spikes

Hi Bryan,
The report didn't detect any EtO spikes and EPA would like to request that Enthalpy:

1. Analyze our bottle to determine if your process (including your choice of standard) somehow is not working in that it is blinding you to our EtO?
2. Analyze a "clean" spike
3. Provide the spiked cans back to us for in-house analysis. These cans include: 2031, 2034, 2052, 2072, 2075

Please let us know if you can help with these requests.

Thanks

Craig Williams
Engineer
CSS | Office: 919.541.0336 | www.css-inc.com
An employee-owned company
Contractor to the USEPA

CONFIDENTIALITY NOTICE: The contents of this email message and any attachments are intended solely for the addressee(s) and may contain confidential, proprietary and/or privileged information and may be legally protected from disclosure. If you are not the intended recipient of this message or their agent, or if this message has been addressed to you in error, please immediately alert the sender by reply email and then delete this message and any attachments and the reply from your system. If you are not the intended recipient, you are hereby notified that any disclosure, use, dissemination, copying, or storage of this message or its attachments is strictly prohibited.

Message

From: Long, Thomas [/O=EXCHANGELABS/OU=EXCHANGE ADMINISTRATIVE GROUP (FYDIBOHF23SPDLT)/CN=RECIPIENTS/CN=8C6A9FA4371E4E3682E45E51082A8FE9-THOMAS, LONG]
Sent: 8/22/2019 12:24:55 PM
To: Snow, Richard [snow.richard@epa.gov]
CC: Kariher, Peter [Kariher.Peter@epa.gov]
Subject: FW: EtO emissions testing in NRMRL
Attachments: eo (meoh & aa)_0.5ppbv std (SIM) & mtd.pdf; eo-to14a-to15 separation - labeled chroms&specta.pdf

---

Thomas Long, Mechanical Engineer
Mail Drop E343-02
Building D Room 360
109 T. W. Alexander Drive
Research Triangle Park, NC 27711
Phone: 919-541-3944

From: Kariher, Peter <Kariher.Peter@epa.gov>
Sent: Thursday, August 15, 2019 9:51 AM
To: Hoyer, Marion <hoyer.marion@epa.gov>; Cullen, Angela <cullen.angela@epa.gov>; Walters, Charles <walters.charles@epa.gov>; Fernandez, Antonio <fernandez.antonio@epa.gov>; Cook, Rich <Cook.Rich@epa.gov>; Nelson, Brian <nelson.brian@epa.gov>; Olechiw, Michael <olechiw.michael@epa.gov>; Long, Thomas <Long.Thomas@epa.gov>; Shores, Richard <Shores.Richard@epa.gov>; Yelverton, Tiffany <Yelverton.Tiffany@epa.gov>; George, Ingrid <George.Ingrid@epa.gov>; Hays, Michael <Hays.Michael@epa.gov>; Loftis, Kathy <loftis.kathy@epa.gov>; Kolowich, Bruce <kolowich.bruce@epa.gov>; Rosati, Jacky <Rosati.Jacky@epa.gov>; Nessley, Libby <Nessley.Libby@epa.gov>; Baldauf, Richard <Baldauf.Richard@epa.gov>; McDonald, Joseph <McDonald.Joseph@epa.gov>; Laroo, Chris <laroo.chris@epa.gov>; Weinstock, Lewis <Weinstock.Lewis@epa.gov>
Subject: RE: EtO emissions testing in NRMRL

Helps to attach the files.

Peter

-----Original Appointment-----
From: Hoyer, Marion <hoyer.marion@epa.gov>
Sent: Thursday, August 08, 2019 9:01 AM
To: Hoyer, Marion; Cullen, Angela; Walters, Charles; Fernandez, Antonio; Cook, Rich; Nelson, Brian; Olechiw, Michael; Long, Thomas; Shores, Richard; Kariher, Peter; Yelverton, Tiffany; George, Ingrid; Hays, Michael; Loftis, Kathy; Kolowich, Bruce; Rosati, Jacky; Nessley, Libby; Baldauf, Richard; McDonald, Joseph; Laroo, Chris; Weinstock, Lewis
Subject: EtO emissions testing in NRMRL
When: Thursday, August 15, 2019 12:00 PM-1:00 PM (UTC-05:00) Eastern Time (US & Canada).
Where: AA-Room-Office-C147-ConfRoom/AA-OTAQ-OFFICE

1-202-991-0477 8908907#

Agenda for this meeting (open to additional topics!):

- Report out on the conversation with Enthalpy
- Discuss how the information we learn from Enthalpy informs testing plans for next LDGV (the F150 with E10)

~~ORIGINAL~~ VJT Copy

ENTROPY

ENVIRONMENTALISTS INC.

POST OFFICE BOX 12291
RESEARCH TRIANGLE PARK
NORTH CAROLINA 27709-2291
919-781-3550

EO 44.05

HCL 36.5

ETHYLENE AND PROPYLENE OXIDE

SAMPLING AND ANALYTICAL METHODOLOGY

DEVELOPMENT AND EVALUATION PROJECT

DL

15-20 µg/ml in impinger reagent

REPORT CERTIFICATION

The sampling and analysis performed for this report was carried out under my direction and supervision.

Date January 24, 1986 Signature Guido J Carrara

Guido J. Carrara

I have reviewed all testing details and results in this test report and hereby certify that the test report is authentic and accurate.

Date January 24, 1986 Signature Walter S Smith

Walter S. Smith, P.E.

ENTROPY

TABLE OF CONTENTS

		PAGE
EXECUTIVE SUMMARY		1-1
INTRODUCTION		
2.1	Problem	2-1
2.2	Background	2-1
2.2.1	Review of NIOSH Methods	2-1
2.2.2	Criteria for Collection and Analysis	2-1
2.3	Analytical Design Concepts	2-2
METHODOLOGY		
3.1	Equipment	3-1
3.2	Chemicals	3-1
3.3	Procedures	3-1
3.3.1	EO and PO Injection Quantities	3-1
3.3.2	Collection System Preparation	3-3
3.3.3	EO and PO Injection	3-3
3.3.4	Sample Recovery	3-4
3.3.5	Stock and Standard Solutions	3-4
3.3.6	Preparation for Analysis	3-4
3.3.6.1	Samples	3-4
3.3.6.2	Standards	3-5
3.3.6.3	Equipment	3-5
3.3.6.4	Neutralization	3-5
3.3.7	Sample Analysis	3-6
3.3.8	Stability Study	3-6
3.4	Data Tabulation	3-6
3.4.1	EO and PO Catch Determinations	3-6
3.4.2	Efficiency Calculations	3-7
3.4.3	Recovery Efficiency Limits	3-7
RESULTS		
4.1	Recovery Efficiency Summary	4-1
4.2	Discussion of Duplicate Trial Recovery Efficiencies	4-1
4.2.1	Low Level Study (Trials 8 and 9)	4-1

(continued next page)

EPA-2021-004229

TABLE OF CONTENTS

(continued)

4.2.2 Medium Level Study (Trials 3 and 4) 4-1

4.2.3 High Level Study (Trials 5 and 10) 4-1

4.2.4 Stability Study 4-1

4.2.5 Over-Titration (Neutralization) of Samples 4-4

4.3 Discussion of Duplicate Injection Efficiencies 4-4

4.3.1 Low Level Study 4-4

4.3.2 Medium Level Stability Study 4-4

4.3.3 High Level Study 4-4

4.4 Reagent Blank Analysis 4-4

4.5 Second Impinger Analyses 4-5

4.6 Aborted Trials 4-5

CONCLUSIONS 5-1

APPENDICES

A. Tabulated Analytical Results

B. Raw Data and Calculations

1. Low Level Study (Trials 8 and 9)
2. Medium Level Study (Trials 3 and 4)
3. Medium Level Stability Study (Trials 3 and 4, Impinger 1)
4. Medium Level Stability Study (Trials 3 and 4, Impinger 2)
5. High Level Study (Trial 5)
6. High Level Study (Trial 10)

C. Gas Specifications

D. Equipment Specifications

E. Laboratory Procedures

ED_005799A_00011131-00004

EPA-2021-004229

EXECUTIVE SUMMARY

contracted Entropy Environmentalists Inc. to develop a collection medium and analytical procedures for measuring gaseous emissions of ethylene oxide (EO) and propylene oxide (PO). A solution of 1.0N HCl n-propyl alcohol was proposed as the collection medium which would convert the EO and PO to stable chlorohydrin compounds (ECl and PClS). The chlorohydrins could then be analyzed by a gas chromatograph with a halide-specific detector.

The effectiveness of the collection medium and the analytical method was assessed by how efficiently the EO and PO were recovered from the sample collection medium. Table 1-1 presents the average recovery efficiencies for EO and PO. Three concentrations (low, medium, and high) of EO and PO were successfully tested; duplicate trials were conducted for each concentration with little variability in the results. Stability of the samples during storage was also examined. Samples stored eight days showed no decrease in recovery efficiency; in fact, the recovery efficiencies actually increased.

TABLE 1-1

EO AND PO RECOVERY EFFICIENCY SUMMARY

	Average Oxide Concentrations, ppm liquid		Average Recovery Efficiencies, %	
	EO	PO	EO	PO
Low	37	19	97.2	71.1*
Medium	800	1,097	96.0	100.2
High	13,017	9,772	93.5	95.6
Stability Study (Medium)	800	1,097	104.1	107.4

* Trials conducted within the range of the PO lower detectable limit.

The results of the study indicate that the collection medium and the analytical method are both reliable and valid for measuring low, medium, and high concentrations of EO and PO. The formation of glycols and the associated interference appear to be minimal based upon the recovery efficiency values.

ED_005799A_00011131-00005

EPA-2021-004229

INTRODUCTION

2.1 Problem. The orporation operates manufacturing processes which emit ethylene oxide (EO) and propylene oxide (PO) to the atmosphere. contracted Entropy Environmentalists Inc. to develop a collection medium and analytical procedures for measuring gaseous emissions of these compounds.

2.2 Background.

2.2.1 Review of NIOSH Methods. Literature addressing the collection and analysis of EO and PO emissions is limited. A review of techniques published by the National Institute for Occupational Safety and Health (NIOSH) revealed that these oxides are typically collected on activated charcoal, an adsorbent medium which imposes four pertinent limitations upon the study of EO and PO emissions:

1. Activated charcoal is capable of adsorbing hydrocarbons in amounts equal only to 20% of the weight of the charcoal, limiting the use of charcoal to adsorb only low concentrations of EO and PO for short sampling periods.

2. Moisture is readily adsorbed by activated charcoal, significantly reducing the already restricted amount of hydrocarbons which the charcoal can adsorb.

3. Moisture and acids adsorbed by the charcoal could interact with the unstable EO and PO, producing glycols and interfering with the analytical results.

4. The accurate division of samples for concurrent analysis by two independent laboratories (a common quality assurance technique) is made impossible, because adsorbed hydrocarbons are not distributed evenly through the charcoal.

2.2.2 Criteria for Collection and Analysis. The limitations of conventional charcoal adsorption techniques and the characteristics of manufacturing processes provided reference points guiding the development of expanded collection and analytical techniques. Three criteria for acceptable

ED_005799A_00011131-00006

EPA-2021-004229

EO and PO collection media and analytical methods were identified:

1. The collection medium must be capable of accepting and retaining high concentrations of EO and PO for extended sampling periods (3 to 24 hours) without becoming saturated.

2. The collection medium must allow the conversion of EO and PO to more stable compounds with little or no formation of glycols.

3. The analytical method must allow the collection medium containing the converted compounds to be analyzed for EO and PO.

Initial research efforts focused upon identifying a collection medium which would induce efficient conversions of EO and PO to stable compounds that could be analyzed and then used to calculate EO and PO emissions. EPA research currently being conducted by Dr. John Margeson of the Quality Assurance Division has shown that a solution of 1.0N HCl n-propyl alcohol is a satisfactory collection medium which will convert EO and PO to stable chlorohydrins while deterring the formation of glycols. Margeson's research also showed that the most effective chlorohydrin detection system is a gas chromatograph with a halide-specific detector (GC/HSD).

2.3 Analytical Design Concepts. The analytical method described in this text is based upon the chlorohydrin conversion concept. The procedures were tested by injecting known quantities of EO and PO into a sampling train containing a collection medium of 1.0N HCl n-propyl alcohol. The collection medium was analyzed for ECl and PClS using a GC/HSD, and those values were calculated as EO and PO using molecular weight ratios. Data are submitted to recommend the use of the described EO and PO sample collection medium and analytical method for the measurement of EO and PO emissions from manufacturing facilities.

ED_005799A_00011131-00007

METHODOLOGY

3.1 Equipment. Figure 3-1 illustrates the sample collection system into which EO and PO were injected. A septum port was provided for syringe injections of low and medium quantities of EO and all quantities of PO. A 40mL sealed glass impinger with two Teflon lines was installed in the sampling system for introducing high quantities of the extremely volatile EO. A three-way valve connected to the impinger intake line allowed the use of nitrogen carrier gas to force the impinger contents to exit through the impinger ouput line and enter the collection system.

Immediately downstream of each injection point, a monitored heat source was provided to facilitate the evaporation of the liquid compounds. At the septum injection port, a Variac-controlled heat tape was wrapped around the sample intake line, and the heated line was enclosed in an insulated box. Downstream of the impinger injection assembly, a 10L Tedlar bag installed in the sample line was heated by an infrared lamp. The Tedlar bag provided a heated mixing and retention chamber for all septum and impinger injections. An on-off valve downstream of the Tedlar bag allowed the gases to be retained.

Downstream of the injection points and retention chamber, four impingers were installed in an ice bath. Each of the first three impingers contained a collection medium of 400mL of 1.0N HCl n-propyl alcohol solution. The fourth impinger was dry. A pump was used to pull the gases through the collection system, and nitrogen was used as a carrier gas during operation of the system.

3.2 Chemicals. Chemicals and reagents used during sample preparation and analysis were provided by Aldrich Chemical Company, Fluka AG, and Fisher Scientific Corporation. Documentation of each chemical's supplier and quality are given in Appendix C.

3.3 Procedures.

3.3.1 EO and PO Injection Quantities. The target injection values presented in Table 3-1 were calculated using:

$$\text{ECl Desired Concentration, ug/mL} \times \frac{\text{EO Mol. Wt.}}{\text{ECl Mol. Wt.}} \times 400\ \text{mL} = \text{EO Injection Quantity, ug}$$

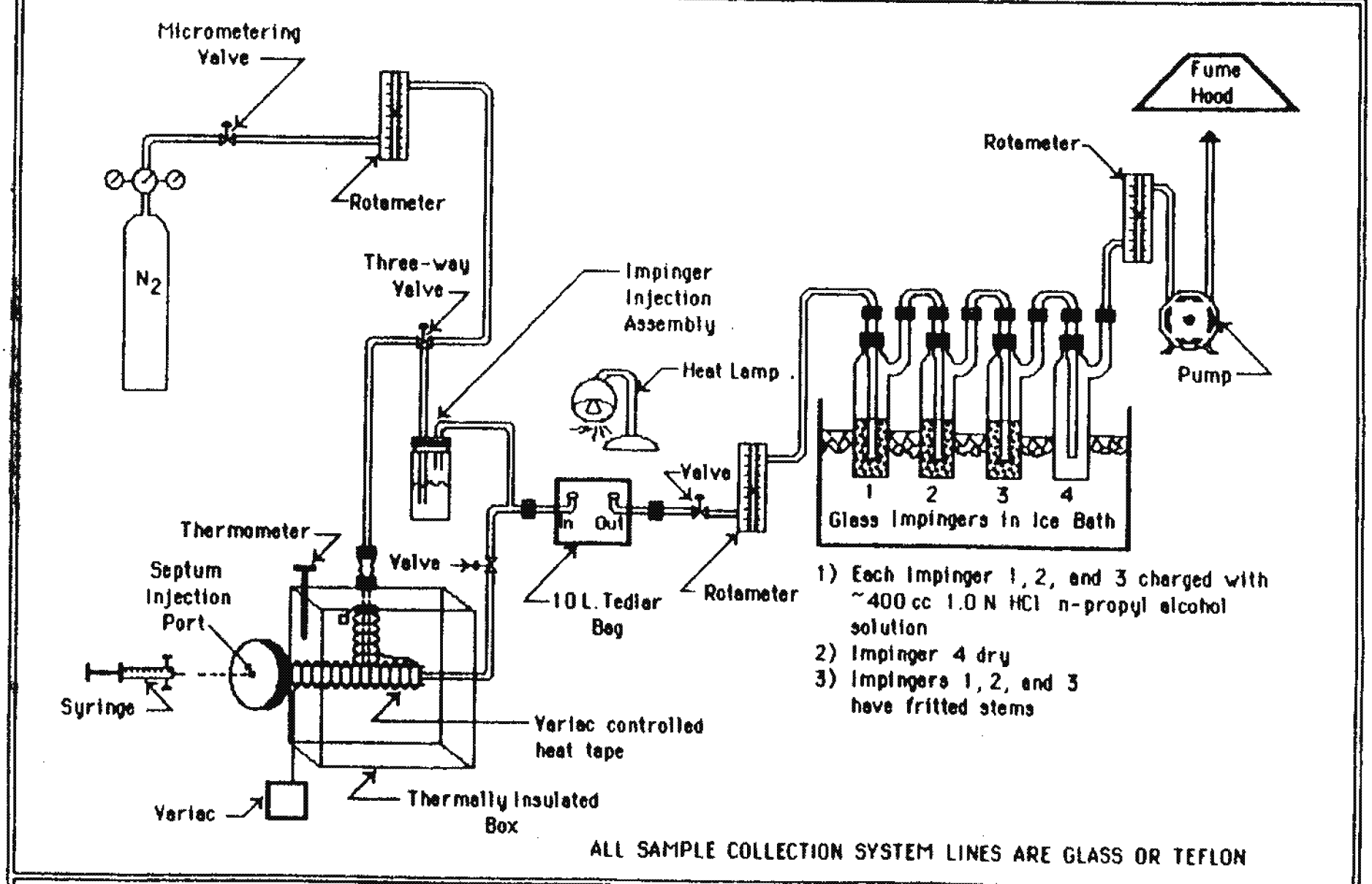

FIGURE 3-1. ETHYLENE OXIDE AND PROPYLENE OXIDE SAMPLE COLLECTION SYSTEM

EPA-2021-004229

TABLE 3-1

TARGET EO AND PO INJECTION QUANTITIES

Based on Final Volumes of 400mL

Desired EC1 and PC1 Concentrations	-- Micrograms -- EO	PO
Low (30 ppm)	6,600	7,400
Medium (2,000 ppm)	437,700	491,500
High (25,000 ppm)	5,471,000	6,143,000

3.3.2 Collection System Preparation. Prior to injections, the septum injection port was heated to 100°C, the heat lamp over the 10L Tedlar bag retention chamber was turned on, and the chamber temperature was allowed to equilibrate. After thermal equilibration, the sample collection system was purged with nitrogen gas for five minutes to expel any potential contaminants. Each of the first three reaction impingers was charged with 400mL of freshly prepared 1.0N HCl n-propyl alcohol solution. The fourth impinger was empty, being provided only to catch any overflow of sample from the preceding impingers. All four impingers were kept in an ice bath to prevent the evaporation of the collection medium.

3.3.3 EO and PO Injection. Duplicate trials were conducted for each target quantity of each compound. Low and medium target quantities of EO and all three target quantities of PO were injected at the septum port using a Hamilton gas-tight syringe. Because of the extreme volatility of the compounds, the syringe was quickly filled with target amounts of EO and PO from the septum vials which had come to ambient temperature after being refrigerated. The septum vials were weighed on an analytical balance before and after use, with the net decrease in weight being used as the quantity of EO or PO injected into the septum port. Target volumes of EO and PO taken from the vials were estimated using densities of 0.8694 gm/mL and 0.830 gm/mL for EO and PO, respectively.

The injected compound was moved by the nitrogen carrier gas to the heated Tedlar bag mixing and retention chamber. By means of a shut-off valve downstream of the chamber, the gases were retained until the Tedlar bag was filled. The valve was then opened and the gases were drawn into the reaction

impingers where the acid-catalyzed conversion to ECl and PCls occurred. When the Tedlar bag was empty, the flow of nitrogen carrier gas was stopped, the flow control valves were closed, and the pump was turned off. The sample collection system was allowed to remain out of operation for five to ten minutes before the samples were recovered.

The same procedures were used to introduce high quantities of EO to the sample collection system, except that the refrigerated EO was loaded into the impinger injection assembly. The loaded impinger injection assembly was purged by the nitrogen carrier gas, and the sample was moved through the retention chamber and to the collection medium.

3.3.4 Sample Recovery. The reaction impingers were disconnected, sealed, removed from the ice bath, and allowed to warm to room temperature. The content of each reaction impinger was transferred for final measurement to a graduated cylinder which had been pre-rinsed with freshly prepared collection medium. After measurements, each recovered impinger sample and its rinsings were transferred to a 500mL glass jar (pre-rinsed with collection medium) with a teflon cap.

3.3.5 Stock and Standard Solutions. A stock solution was made of 38,380 ug/mL ECl and 39,476 ug/mL PCls. From this stock solution, standards were prepared for the low, medium, and high level studies. Standard solutions used for each trial were prepared in concentrations corresponding to the concentrations of ECl and PCls expected in the recovered samples. The internal standard was 3-chloropropanol. Standard solutions used are documented in Appendix B.

3.3.6 Preparation for Analysis. For each trial, one 40mL vial was used to prepare each sample solution, and one 40mL vial was used to prepare the standard solution. The preparation of samples, standards, and internal standards is documented in Appendix B. Sample aliquots are documented in Appendix A.

3.3.6.1 Samples. A sample aliquot was prepared by placing an aliquot of the exposed sample collection medium in a 40mL vial. The internal standard was then added and thoroughly mixed with the sample aliquot. It

should be noted that some samples required dilution with a solution of 1.0N HCl n-propanol in order to fall within the ranges of the standard concentrations.

3.3.6.2 Standards. The standard solution was prepared in a 40mL vial. The following ingredients were mixed together thoroughly:

1) an appropriate amount of diluted or undiluted stock solution which will introduce the desired mass of ECl and PCL

2) the same amount of internal standard that was used in the sample solution

3) a volume of unexposed collection medium (1.0N HCl n-propyl alcohol) equal to the volume of sample aliquot used in the sample solution

3.3.6.3 Equipment. The pipets and microsyringes used for dispensing both the sample aliquot and stock solution were pre-rinsed once with freshly prepared 1.0N HCl n-propyl solution, and then three times with the particular solution to be added (either the sample aliquot or stock solution). Pipets and microsyringes used for dispensing the internal standard were purged twice with methanol and three times with the internal standard.

3.3.6.4 Neutralization. Four drops of methyl orange were added to each vial for use as a neutralization indicator. The sample and standard were neutralized to a pH value between 4 and 5 with a solution consisting of 11.085g of NaOH, 15mL of H_2O, and 60mL of 1-propanol; the solution was diluted to a final volume of 100mL with methanol.

A magnetic stirrer was placed in each vial before titration to ensure thorough mixing. A color change from pink to yellow signified the desired neutralization end point. For more accurate pH determination, a syringe was used to apply droplets from each vial to pH paper. Samples and standards with a pH value below 4 were further titrated; those with a pH above 5 were discarded and new ones were prepared. A second neutralizing solution with 1/10 of the original concentration was added when vial contents approached neutralization, reducing the possibility of over-titration. When the desired pH was obtained, the magnetic stirrers were removed and the vials were centrifuged. After the precipitates settled, the sample and standard were ready for analysis.

3.3.7 Sample Analysis. At the beginning and end of each analysis day, injection syringes were cleaned by rinsing several times with methanol. Before sample injection, the syringe was purged three times with sample to remove any residue from previous injections. Liquid sample was repeatedly drawn into the syringe and rapidly expelled back into the liquid to reduce the amount of air contained in the syringe. Approximately 1uL of prepared sample was drawn into the syringe. If any air bubbles remained, a septum was placed on the end of the syringe to alleviate the air pockets.

After removing the septum, the needle was put through tissue so that any expelled liquid would be captured. The plunger was pushed forward until only the desired sample volume of 1uL was retained, and the needle was wiped clean while removing the tissue. The sample was injected into the GC/HSD which was operated as detailed in Appendix D and in accordance with manufacturer specifications (Appendix D).

Syringes were rinsed with methanol once between injections. If EC1 and PC1s were not detected in the second impinger samples, the corresponding third impinger samples were not analyzed.

3.3.8 Stability Study. The original collection medium from the medium level concentration trials (trials 3 and 4) were held for eight days; a second aliquot was taken and the analysis was performed again. The results were compared to indicate changes in the compounds in the collection medium as a function of storage time.

3.4 Data Tabulation.

3.4.1 EO and PO Catch Determinations. For each trial, the mass quantity of EO in the collection medium was calculated using Equation 1 shown on the following page. The same equation (with PO and PC1s values substituted for EO and EC1 values) was used to calculate the mass quantities of PO for each trial. The values used in Equation 1 are given in Appendices A and B.

The term EC1/IS is the ratio of EC1 to IS chromatogram area counts from injecting either the sample solution or the standard solution. The third term represents the concentration (ug/mL) of EC1 in the sample solution as defined by the ratio of the mass of EC1 in the standard to the volume of the

sample solution injected. Using the final volume of the collection medium in the impingers from each trial allows the aliquot results to be interpreted as a final mass in the original sample. The molecular weight ratio of EO to ECl allows the calculation of an EO catch from the ECl analytical results.

EQUATION 1

EO AND PO CATCH DETERMINATIONS

$$\text{EO ug}_{imp} = \frac{(\text{ECl/IS})_{smple}}{(\text{ECl/IS})_{std}} * \frac{(\text{ECl ug})_{std}}{(\text{Vol. mL})_{smple}} * \frac{\text{mol.wt. EO}}{\text{mol.wt. ECl}} * (\text{Vol. mL})_{imp}$$

Where:

ECl/IS	= ratio of ethylene chlorohydrin and internal standard area counts from chromatograms
ECL ug	= mass of ethylene chlorohydrin, micrograms
EO ug	= mass of ethylene oxide, micrograms
imp	= impingers containing the collection medium
mol.wt.	= molecular weight of compound:
	EO = 44.05 ug/umole
	ECl = 80.52 ug/umole
	PO = 58.08 ug/umole
	PCls = 94.54 ug/umole (1-propylene chlorohydrin + 2-propylene chlorohydrin)
smple	= sample of collection medium injected for analysis
std	= standard solution
Vol. mL	= volume of solution, milliliters

3.4.2 Efficiency Calculations. Recovery efficiencies were calculated by computing a catch weight of EO or PO from the concentration of ECl or PCls found in each sample (using molecular weight ratios), dividing that computed catch weight by the known quantity of EO or PO injected to the sample collection system, and multiplying by 100.

3.4.3 Recovery Efficiency Limits. The upper and lower limits of EO and PO recovery efficiencies were calculated for trials in which two injections were performed for both the standard and sample. Standard deviations (SD) calculated (refer to Appendix A) for each of the two injection sets were used

in Equations 2 and 3 (shown on page 3-8) to determine the highest and lowest possible recovered quantities of EO. PO and PCl values were substituted in the equations for calculating recovered PO. The calculated highest and lowest possible recovered quantities of EO or PO were used in Equations 4 and 5 to calculate the upper and lower recovery efficiency limits for this collection and analytical method.

EQUATION 2

UPPER RECOVERED CATCH LIMITS

$$\underset{\text{(upper)}}{\text{EO ug}_{imp}} = \frac{(\text{ECl/IS} + \text{SD})_{smple}}{(\text{ECl/IS} - \text{SD})_{std}} * \frac{(\text{ECl ug})_{std}}{(\text{Vol. mL})_{smple}} * \frac{\text{mol.wt. EO}}{\text{mol.wt. ECl}} * (\text{Vol. mL})_{imp}$$

EQUATION 3

LOWER RECOVERED CATCH LIMITS

$$\underset{\text{(lower)}}{\text{EO ug}_{imp}} = \frac{(\text{ECl/IS} - \text{SD})_{smple}}{(\text{ECl/IS} + \text{SD})_{std}} * \frac{(\text{ECl ug})_{std}}{(\text{Vol. mL})_{smple}} * \frac{\text{mol.wt. EO}}{\text{mol.wt. ECl}} * (\text{Vol. mL})_{imp}$$

EQUATION 4

UPPER RECOVERY EFFICIENCY LIMITS

$$\text{Upper Recovery \%} = (\underset{\text{(upper)}}{\text{EO ug}_{imp}} / \underset{\text{(actual)}}{\text{EO ug}_{imp}}) * 100$$

EQUATION 5

LOWER RECOVERY EFFICIENCY LIMITS

$$\text{Lower Recovery \%} = (\underset{\text{(lower)}}{\text{EO ug}_{imp}} / \underset{\text{(actual)}}{\text{EO ug}_{imp}}) * 100$$

EPA-2021-004229

RESULTS

4.1 Recovery Efficiency Summary. The recovery efficiencies of EO and PO shown in Table 4-1 indicate that the collection medium (1.0N HCl n-propyl alcohol) and the analytical method are both reliable and valid for measuring low, medium, and high concentrations of EO and PO emissions. Table 4-2 gives the recovery efficiencies for samples neutralized to a pH greater than 5 (over-titration study) and for samples reanalyzed after being held for eight days after the initial analysis (stability study).

Results of trials which are not summarized in this section were voided because of failures during injection of EO or PO to the sample collection system and problems with the integrator. Detailed results and calculations are provided in Appendix A; analytical data are provided in Appendix B.

4.2 Discussion of Duplicate Trial Recovery Efficiencies

4.2.1 Low Level Study (Trials 8 and 9). Duplicate trials for EO and PO show average recovery efficiencies of 97.2 ±2.3% and 71.1 ±2.5%, respectively. Results indicate that the low level study was conducted in the range of the lower PO detection limit of the method.

4.2.2 Medium Level Study (Trials 3 and 4). Duplicate trials for EO and PO show average recovery efficiencies of 96.0 ±0% and 100.2 ±0.6%, respectively.

4.2.3 High Level Study (Trials 5 and 10). Duplicate trials for EO and PO show average recovery efficiencies of 93.5 ±0.2% and 100.2 ±0.1%, respectively.

4.2.4 Stability Study. Portions of the samples from trials 3 and 4 were held for eight days before analysis was performed. The EO and PO recovery efficiencies were the same or higher than those for samples analyzed on the same day of collection. The stability study therefore indicates that recovery efficiencies are not a function of increased time between sample collection and analysis.

ED_005799A_00011131-00016

EPA-2021-004229

TABLE 4-1

EO AND PO RECOVERY EFFICIENCY TABULATIONS

	Ethylene Oxide ug	Ethylene Oxide ppm *	Propylene Oxide ug	Propylene Oxide ppm *
LOW LEVEL STUDY				
Trial 8				
Quantity Injected	14,730	36.8	7,692	19.2
Average Quantity Found	14,636	36.6	5,608	14.0
Recovery Efficiency, %	99.4	-	72.9	-
Trial 9				
Quantity Injected	14,730	36.1	7,692	18.9
Average Quantity Found	13,990	34.3	5,320	13.0
Recovery Efficiency, %	95.0	-	69.2	-
MEDIUM LEVEL STUDY				
Trial 3				
Quantity Injected	343,100	762.4	489,700	1,088.2
Average Quantity Found	329,481	732.2	493,682	1,097.1
Recovery Efficiency, %	96.0	-	100.8	-
Trial 4				
Quantity Injected	377,000	837.8	498,000	1,106.7
Average Quantity Found	361,679	803.7	496,071	1,102.4
Recovery Efficiency, %	95.9	-	99.6	-
HIGH LEVEL STUDY				
Trial 5				
Quantity Injected	7,073,400	15,211.6	4,150,000	8,924.7
Average Quantity Found	6,628,792	14,255.5	3,963,316	8,523.3
Recovery Efficiency, %	93.7	-	95.5	-
Trial 10				
Quantity Injected	5,086,700	10,822.8	4,990,600	10,618.3
Average Quantity Found	4,746,253	10,098.4	4,774,105	10,157.7
Recovery Efficiency, %	93.3	-	95.7	-

* ppm values are the ratio of EO or PO injected or found to the final volume of collection medium.

ED_005799A_00011131-00017

EPA-2021-004229

TABLE 4-2

SAMPLE NEUTRALIZATION AND STABILITY EFFICIENCY RESULTS

	Ethylene Oxide ug	Ethylene Oxide ppm *	Propylene Oxide ug	Propylene Oxide ppm *
NEUTRALIZATION OVER-TITRATION STUDY				
Trial 4				
Quantity Injected	377,000	837.8	498,000	1,106.7
Average Quantity Found	341,051	757.9	354,209	787.1
Recovery Efficiency, %	90.5	-	71.1	-
STABILITY STUDY				
Trial 3				
Quantity Injected	343,100	762.4	489,700	1,088.2
Average Quantity Found	354,951	788.8	553,802	1,190.7
Recovery Efficiency, %	103.5	-	109.4	-
Trial 4				
Quantity Injected	377,000	837.8	498,000	1,106.7
Average Quantity Found	394,160	875.9	524,876	1,166.4
Recovery Efficiency, %	104.6	-	105.4	-

* ppm values are the ratio of EO or PO injected or found to the final volume of collection medium.

ED_005799A_00011131-00018

EPA-2021-004229

4.2.5 Over-Titration (Neutralization) of Samples. A portion of the sample from trial 4 was "over-titrated" (neutralized beyond a pH of 5) prior to analysis. There was a 5.6% decrease in the recovery efficiency for over-titrated EO samples, while the recovery efficiency for over-titrated PO samples decreased 28.6%. These results indicate that the neutralization of samples beyond a pH of 5 can negatively bias the recovery efficiencies, affecting PO results even more profoundly than EO results.

4.3 Discussion of Duplicate Injection Efficiencies. Recovery efficiency variability is tabulated in Appendix A for trials 8 and 9 (low level), trials 3 and 4 (medium level stability) and trial 10 (high level). The absolute upper and lower recovery efficiency limits were computed by calculating the standard deviation for each set of standards and samples injected for each trial and using those values in equations 2 and 3.

4.3.1 Low Level Study. Trial 8 recovery efficiency variability was from 88.9 to 110.6% for EO and 35.6 to 113.4% for PO. Trial 9 recovery efficiency variability for EO and PO were from 90.5 to 99.7% and 32.4 to 109.1%, respectively. The large range for PO can only be attributed to an inferred lower detection limit.

4.3.2 Medium Level Stability Study. For trial 3, recovery efficiency variability for EO was from 97.9 to 109.1%, and for PO it was 105.4 to 113.5%. For trial 4, recovery efficiency variability for EO and PO were 98.9 to 110.2% and 102.0 to 108.9%, respectively.

4.3.3 High Level Study. Trial 10 recovery efficiency variability for EO and PO were from 89.4 to 97.5% and 93.6 to 97.7%, respectively.

4.4 Reagent Blank Analysis. Reagent blank samples were injected during the analysis of the low level samples and during the second impinger analyses for the medium level samples. For both injections, the chromatogram data (see Appendix B) indicated inherent unknown or ghost values present at approximate retention times of 3 and 200 seconds. These ghost values have been attributed to the n-propyl alcohol solution which ideally should have been of chromatograph purity instead of A.C.S. grade.

EPA-2021-004229

4.5 Second Impinger Analyses. For trials 3 and 4 (Medium Level Study) and trial 5 (High Level Study), second impinger analyses show no ECl or PCls present, indicating recovery efficiencies for all trials were adequately expressed by concentrations of EO and PO found in the first impinger.

4.6 Aborted Trials. Trials 1 and 2 (Low Level Study) were aborted due to inadequate injection technique. Trials 6 and 7 (High Level Study) were aborted due to difficulties with the integrator.

ED_005799A_00011131-00020

EPA-2021-004229

CONCLUSIONS

This study bears the following conclusions:

1. The 1.0N HCl n-propyl alcohol collection medium has the capability of converting EO and PO to equimolar quantities of their respective chlorobydrins (ECl and PClS).

2. The generally high recovery efficiencies of EO and PO in the collection medium indicate that the formation of glycols as a side reaction product is minimal.

3. There was little variability in the recovery efficiencies of EO and PO, indicating a high reliability for this analytical method.

4. For the low level trials, the approximate 70% PO recovery efficiency for sample concentrations of 20 ppm was unacceptable for the purposes of this study. The lower sample concentration limit for acceptable PO recovery efficiencies lies somewhere between the low and medium levels concentrations.

5. The trial 4 over-titrated sample analytical results indicated a major degredation of PClS and a miminum degredation of ECl when the sample was neutralized beyond a pH of 5. The resulting PO recovery efficiency was significantly reduced by 29%, while the EO recovery efficiency was minimally reduced by only 6%.

6. The stability study conducted on samples from trials 3 and 4 showed excellent sample stability. The difference between the results of the analyses performed on the same day of sample collection and analyses performed eight days after sampling was negligible, indicating stability of the ECl and PCl compounds in the sample collection medium.

ED_005799A_00011131-00021

Message

From: Long, Thomas [Long.Thomas@epa.gov]
Sent: 4/9/2019 2:39:02 PM
To: Nessley, Libby [Nessley.Libby@epa.gov]
CC: Shores, Richard [Shores.Richard@epa.gov]
Subject: QAPP
Attachments: QAPP Mobile Source Emissions Measurement and Characterization (20190409).docx; Addendum 2, WA 34 Speciation of Exhaust Emissions from Trucks.docx

Libby,

I have modified the QAPP to include provisions to include EtO in our TO-15 analysis and added an addendum to describe our mini-study next week. Please find them attached. Changes made to the main QAPP appear in a bold red font. Thanks.

_____

Thomas Long, Mechanical Engineer
Mail Drop E343-02
Building D Room 360
109 T. W. Alexander Drive
Research Triangle Park, NC 27711
Phone: 919-541-3944

EPA United States Environmental Protection Agency

NRMRL QUALITY ASSURANCE PROJECT PLAN

Office of Research and Development
National Risk Management Research Laboratory
Air Pollution Prevention and Control Division
Emissions Characterization and Prevention Branch

Mobile Source Emissions and Characterization

EPA NRMRL Technical Lead Person: Thomas Long

Project Type:Measurement QA Category IV

Extramural Research

Revision Number: Original
Date: April 9, 2019

Prepared by:
Thomas Long, EPA

EPA Contract Number: EP-C-15-008

National Program: Air-Energy
Project: Emissions Measurement 2-2

Approval Page

QA Project Plan Title:	**Mobile Source Emissions and Characterization**
NRMRL QA Tracking ID:	
If Intramural or Extramural, EPA NRMRL Project Approvals	
Name: Technical Lead Person (TLP) Thomas Long	Signature/Date:
Name: TLP's Supervisor	Signature/Date:
Name: QA Manager Robert Wright	Signature/Date:
Name: Other EPA	Signature/Date:
Name: Other EPA	Signature/Date:
If Extramural, Contractor Approvals	
Name: Contractor Manager/Lead Chris Winterrowd	Signature/Date:
Name: Contractor QA: Zora Drake-Richman	Signature/Date:
Name: Other Contractors:	Signature/Date:
Name: Other Contractors:	Signature/Date:

Table of Contents

[TOC \o "1-4" \t "Headline,1,Heading 1 no numbering,1"]

List of Tables

[TOC \h \z \t "Table Caption,2"]

List of Figures

[TOC \h \z \t "Figure Caption,2"]

List of Appendices

[TOC \n \t "Appendix Title" \c]

List of Acronyms

APPCD	Air Pollution Prevention and Control Division
ASCII	American Standard Code for Information Interchange
ASTM	American Society for Testing and Materials
B1	Building 1
B20	Biodiesel fuel blend; 20% biodiesel (v/v), 80 % Ultra Low Sulfur Diesel
C	Concentration
C1	Carbon # of 1 (methane)
C2	Carbon # of 2
C12	Carbon # of 12
CAAA	Clean Air Act Amendments
CAI	California Analytical Instruments
CARB	California Air Resources Board
CD-R	Compact Disk – Recordable
CEM	Continuous Emission Monitor
CFR	Code of Federal Regulations
CFV	Critical Flow Venturi
CG	Conventional Gasoline
CH_4	Formula for Methane
CLD	Chemiluminescence Detector
CO	Carbon MoNO$_x$ide
CO_2	Carbon Dioxide
CRC	Coordinating Research Council
CSV	Comma separated value
CV	Coefficient of variation
CVS	Constant Volume Sampler
DNPH	Dinitrophenylhydrazine
DQA	Data quality audit
DQI	Data Quality Indicators
E10	Ethanol fuel , 10 % ethanol / 90 % gasoline
E15	Ethanol fuel, 15 % ethanol / 85 % gasoline

E85	Ethanol fuel, 85 % ethanol / 15 % gasoline
ECPB	Emissions Characterization and Prevention Branch
EPA	Environmental Protection Agency
EPC	Environmental Particle Counter
EEPS	Engine Exhaust Particle Sizer
ERG	Eastern Research Group
ETBE	Ethyl-tertiary-butyl-ether
F	Fahrenheit
FID	Flame Ionization Detector
FTP	Federal Test Procedure
GC	Gas Chromatograph
GM	Grams
GVWR	Gross Vehicle Weight Rating
H_2O	Water
HAP	Hazardous Air Pollutant
HC	Hydrocarbon
HCLD	Heated Chemiluminescent Analyzer
HDUDDS	Heavy Duty Urban Dynamometer Driving Schedule
HEPA	High Efficiency Particulate Air filter
HFID	Heated Flame Ionization Detector
HPLC	High Performance Liquid Chromatography
HR	Hour
IDL	Instrument detection limit
IQR	Interquartile Range
L	Liter
LA92	Los Angeles 1992
LPM	Liters per minute
MDL	Method detection limit
MFC	Mass Flow Controller
MG	Milligrams
MHDT	Medium Heavy Duty Truck
ML	Milliliter
MM	Millimeters
MOP	Miscellaneous Operating Procedures

MQL	Method Quantification Limit
MQO	Measurement Quality Objectives
MSAT	Mobile Source Air Toxic
MTBE	Methyl-tertiary-butly-ether
N	Number of measurements planned
N/A	Not applicable
NDIR	Non-dispersive infra-red
NIST	National Institute of Standards and Technology
NMHC	Non-methane Hydrocarbon
NMIM	National Mobile Inventory Model
NMOG	Non-methane Organic Gas
NO_X	Oxides of Nitrogen
NRMRL	National Risk Management Research Laboratory
OBDII	On-Board Diagnostics version 2
OD	Outside Diameter
ORD	Office of Research and Development
PAH	Polycyclic Aromatic Hydrocarbons
PE	Perfromance evaluation
PEMS	Portable Emission Measurement System
POM	Polycyclic Organic Matter
Ph1	Phase 1
Ph2	Phase 2
PI	Principal Investigator
PM	Particulate Matter
PPM	Parts per million
PPMC	Parts per million of carbon
PSI	Pounds per Square Inch
PTFE	Polytetrafluoroethylene
QA	Quality Assurance
QAPP	Quality Assurance Project Plan
OBDII	On-Board Diagnostic II
QC	Quality Control
QT	Quart
REMPI	Resonance Enhanced Multiphoton Ionization

RPD	Relative Percent Difference
RSD	Relative Standard Deviation
RTP	Research Triangle Park
RVP	Reid Vapor Pressure
S	Sample standard deviation
SAE	Society of Automotive Engineers
SCFM	Standard Cubic Feet per Minute
SOP	Standard Operating Procedure
SOW	Statement of work
SSE	Sum of Squared Errors
STD	Standard
TAME	Tertiary-amyl methyl ether
TBD	To Be Determined
THC	Total Hydrocarbons
TIC	Tentatively identified compound
TSA	Technical Systems Audit
TSI	Trust, Science, Innovation
UDDS	Urban Dynamometer Driving Schedule
ULSD	Ultra Low Sulfur Diesel
µG	Microgram
µL	Microliter
URL	Uniform Resource Locator
V	Number of Valid measurements
VOC	Volatile Organic Compound
WA	Work Assignment
WAL	Work Assignment Leader
WAM	Work Assignment Manager
X	Sample mean

Distribution List

To facilitate distribution of the most recent versions of this Quality Assurance Project Plan (QAPP), a list of principal project participants is contained below (see Section 1 for contact information):

- Thomas Long, NRMRL
- Richard Baldauf, NRMRL
- Robert Wright, NRMRL
- Chris Winterrowd, Jacobs
- Zora Drake-Richman, Jacobs
- Billy Preston, Dymak

1. Project Description and Objectives

1.1 Study Purpose

The Mobile Source Emissions Measurement and Characterization (MSEMC) project utilizes any combination of a small engine dynamometer, a light-duty chassis dynamometer, a heavy-duty chassis dynamometer, and a portable emission measurement system (PEMS) to measure and characterize vehicle emissions in a variety of vehicle operating modes. This project supports the air, climate, energy (ACE) project Emissions Measurement-2 (EM-2), Task 032. It supports the characterization of mobile source emissions in support of human health program areas, and supports other motor vehicle projects. The EPA's Motor Vehicle Emission Simulator (MOVES) model seeks to constantly strengthen the breadth and depth of data used to create emission factors to represent real world driving conditions, including roadway surfaces, traffic load, fuel effects, combustion technologies, and exhaust aftertreatments. In addition, the MSEMC team will provide speciated data to support the program office as it works to further understand the conditions resulting in the emission of Mobile Source Air Toxics (MSATs) which will allow for the development of mitigation strategies and refined modeling. Included in EM-2 is the use of speciated emission factors in the Speciate Database.

In preparation for generating those factors, the Mobile Source Emissions Laboratory at RTP validated a portable emission measurement system (PEMS) unit driving over the road and on a chassis dynamometer. This data demonstrated the similarities in emission rates over a dynamometer driving cycle. It also demonstrated a known difference. PEMS data is normalized to vehicle specific power (VSP) and dynamometer emissions are normalized to mass per vehicle mile travelled. The correlation was satisfactory when looked at in grams per mile, but emission rates in the higher VSP bins measure higher using the PEMS than using a CVS dilution tunnel. The raw bench was also used to compare to the PEMS measurements. While it picked up the higher emissions during high VSP excursions better than the CVS bench, it also spread those concentrations over more time than did the PEMS. These results are consistent with expectations in comparing the two types of sampling systems.

1.2 Scope and Objectives

The Air Pollution and Prevention Division research supports the National Risk Management Research Laboratory's efforts to reduce greenhouse gas emissions and

improve air quality. One way this is done is to support of the Air, Climate, and Energy (ACE) research program. EPA's Air, Climate, and Energy research program examines the interplay between air pollution, climate change, and the dynamic energy sector to develop innovative and sustainable solutions for improving air quality and taking action on climate change. The results of the research efforts support policies that have far-reaching and positive impact across the nation.

The MSEMC project directly supports the ACE mission. Specifically, the Emissions Measurement-2 Project which seeks to improve emissions inventories using measurements and models. Task EM-2.2 (also known as Task 032) is the characterization of emissions from on-road and non-road mobile sources.

This QAPP is designed to provide the specifics of how quality assurance is applied to this task as well as other basic research to support US EPA goals.

This work has been designed to provide data to fill gaps, strengthen the statistical robustness of existing emission factors, and provide a laboratory environment in which new measurement methods and instruments can be evaluated for their potential to be used in the future to provide an improved means to characterize mobile source emissions. Data has been used to inform the Motor Vehicle Emission Simulator (MOVES).

The scope of data collection activities include the following:

- Testing will be conducted over the road with gaseous regulated emissions measured using portable emission measurement system (PEMS). Onroad testing identifies operating modes that may be encountered in real world driving conditions that are not present during emission certification dynamometer driving schedules. Emissions occurring under these operating modes are referred to as off-cycle emissions. Identifying conditions which generate off-cycle emissions helps to inform MOVES and may indicate the need for the program office to conduct a larger study to support changes or improvements in emissions standards. Routes will be specified in an appendix for each Work Assignment (WA).

- Chassis dynamometer test cycles provide a means of generating emissions factors for regulated emissions and complementing those factors with speciated data. There is currently no reference method for speciating VOCs or SVOCs onroad. Because each driving schedule is extremely repeatable, emission factors from chassis dynamometer testing generally exhibit less variability. The test cycles

themselves are selected to represent the vehicle operating modes relevant to the Work Assignment (WA) objectives. These test cycles will be included in the WA addendum.

- Core measurements for laboratory tests include Total hydrocarbons (THC), non-methane hydrocarbons (NMHCs), non-methane organic gas (NMOG), oxides of nitrogen (NO_X), nitrogen dioxide (NO_2), carbon monoxide (CO), carbon dioxide (CO_2), and particulate matter (PM) mass. will be measured on the chassis dynamometer.

- Core measurements for onroad tests include Total hydrocarbons (THC), oxides of nitrogen (NO_X), nitrogen dioxide (NO_2), carbon monoxide (CO), and carbon dioxide (CO_2). PM measurements are an option for specific WAs as indicated in the WA addendum. However, PEMS measurements typically will be gaseous only as supplemental AVL Mass Soot Sensor (MSS) PM measurements currently require the loan of equipment from the program office. Each Work Assignment appendix will reference the use of the AVL MSS when applicable.

- Speciated volatile organic compounds (speciated VOC), including C2-C12 hydrocarbons, light alcohols, and carbonyls will be determined during testing on the chassis dynamometer but not during onroad testing.

Project Schedule

- Submit QAPP
- QAPP Approval
- Day after QAPP approval begin testing
- One (1) week after sampling is completed begin data validation
- Six (6) weeks after sampling is completed begin report preparation
- Complete report prior to completion of the WA period of performance
- <Each WA addendum will include specific schedule dates.>

2. Organization and Responsibilities

Areas of responsibility and contact information for personnel involved with this project are given in this section and shown in Figure 2-1.

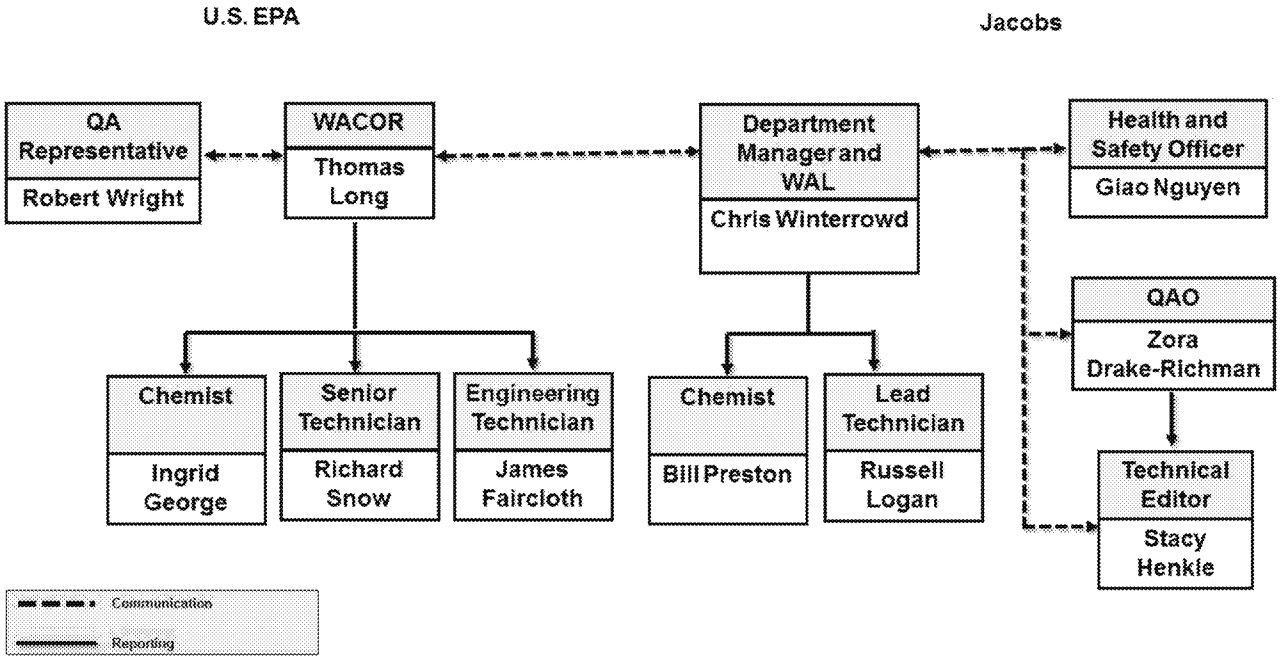

Figure [STYLEREF 1 \s]-[SEQ Figure * ARABIC \s 1]. Organization Chart

2.1 Project Personnel

EPA Project Officer, Robin Bailey: Robin Bailey will provide programmatic support to the project.

Phone: (919) 541-7906
Email: baily.robin@epa.gov

EPA Work Assignment Manager (WAM), Thomas Long: The EPA WAM is responsible for communicating the scope of work and deliverables required for this work assignment (WA). The EPA WAM is responsible for preparing and, together with the Senior Engineering Technician, for maintaining and implementing the project quality

assurance project plan (QAPP). The EPA WAM will share in the preparation of the project report.

Phone: (919) 541-3944
E-mail: [HYPERLINK "mailto:long.thomas@epa.gov"]

EPA Alternate Work Assignment Manager (WAM), Richard Baldauf: The EPA Alternate WAM is responsible for assuming the duties of the WAM in the unlikely event that the WAM becomes unavailable. The Alternate WAM also provides expertise that may be utilized by the WAM.

Phone: (919) 541-4386
E-mail: [HYPERLINK "mailto:baldauf.richard@epa.gov"]

JACOBS Program Manager, Pamela Bayles: The Program Manager has overall responsibility for all tasks and WAs. The Program Manager will support technical planning, execution, data reduction, and reporting related to this WA.

Phone: (847) 420-8565
E-mail: [HYPERLINK "mailto:pamelabayles@jacobs.com"]

EPA Chemist, Ingrid George: Will perform the analyses of the VOC canisters and DNPH cartridges.

Phone: (919) 541-9780
E-mail: [HYPERLINK "mailto:george.ingrid@epa.gov"]

EPA Senior Engineering Technician, Richard Snow: The Senior Engineering Technician will provide coordination in the field to EPA, JACOBS, and other scientists and technicians involved in this project. Together with the EPA WAM, he is responsible for maintaining and implementing the project quality assurance project plan (QAPP). The Senior Engineering Technician is responsible for communicating any delays in scheduling or changes in cost to the EPA WAMs as soon as possible. The Senior Engineering Technician is to approve and implement corrective actions in the field. The Senior Engineering Technician is responsible for ensuring vehicle simulations are performed correctly and that dynamometer road load coefficients are appropriately

calculated and applied. The Senior Engineering Technician will share in the preparation of the project report.

Phone: (919) 541-3135
E-mail: [HYPERLINK "mailto:snow.richard@epa.gov"]

EPA Engineering Technician Assistant, James Faircloth: The EPA Engineering Technician Assistant will serve as the test vehicle driver and be responsible for vehicle fuel changes and evaporative canister purging and other vehicle related duties. He will also assist the JACOBS Engineering Technician in maintenance and calibration of the test cell instruments and equipment. He will also be responsible for the weighing of 47-mm filters and operation of the heated filter collection station for the collection of 47-mm filters.

Phone: (919) 541-0363
E-mail: [HYPERLINK "mailto:faircloth.james@epa.gov"]

JACOBS WA Leader (WAL), Chris Winterrowd: The JACOBS WAL is responsible for preparing project deliverables and managing the contractor's contribution to the project. He will ensure that JACOBS meets scheduled milestones and stays within the budgetary constraints agreed upon by EPA. The WAL is responsible for communicating any delays in scheduling or changes in cost to the EPA Project Officer and WAMs as soon as possible. The WAL will also communicate with the JACOBS technical staff to ensure the project is carried out as planned. The WAL is also responsible for organizing a technical staff with the appropriate training and experience to carry out the data collection activities described in this QAPP. The WAL will arrange for all required independent sample and fuel analyses. The WAL is responsible for ensuring that test procedures and calculations performed comply with requirements of this QAPP. He is also responsible for reporting any data collection issues that may affect data quality to the QA Officer

Phone: (919) 541-1847
E-mail: [HYPERLINK "mailto:chris.winterrowd@arcadis-us.com"]

JACOBS Sampling Technician, Russell Logan: The Sampling Technician is responsible for preparing sample media and collecting samples from the dilution tunnel, including dinitrophenylhydrazine (DNPH) cartridges for carbonyls and SUMMA canisters for volatile organic compounds (VOC). He is also responsible for operation of the Exhaust Engine Particle Sizer (EEPS).

Phone: (919) 541-3810
E-mail: [HYPERLINK "mailto:russell.logan@Jacobs.com"]

CSS-Dynamac (Jacobs Teammate) Chemist, Billy Preston: The Chemist is responsible for analysis of oxygenates (ethanol and methanol) by gas chromatography (GC).

Phone: (919) 541-2719
E-mail : [HYPERLINK "mailto:bill.preston@CSS-Dynamac.com"]

Southwest Research Institute (SWRI), Robert Legg: Mr. Legg is the primary contact for SWRI, the subcontractor that will be performing fuel analyses when the EPA lacks the resources to do so internally.

Phone: (210) 522-2071
E-mail: [HYPERLINK "mailto:Robert.Legg@swri.org"]

2.2 QA Management

EPA QA Representative, Robert Wright: The EPA QA Representative will be responsible for reviewing and approving this QAPP. This project has been assigned a QA Category IV.

Phone: (919) 541-4502
E-mail: [HYPERLINK "mailto:wright.robert@epa.gov"]

2.3 Project Organization

JACOBS will receive technical direction from the WAM. The EPA will be responsible for coordinating the laboratory activities of all on-site scientists and technicians, including JACOBS. The EPA must communicate their plans and schedule sufficiently to allow all personnel to be informed of when they must start and stop sampling or remove media for analysis. In the event that personnel are not prepared in a timely manner to perform duties they wish to coordinate with JACOBS activities, JACOBS will not stop or delay the activities within their area of responsibility without first consulting the WAM (or alternate WAM), should that delay or stoppage be reasonably anticipated to result in an increase in project cost.

Project responsibilities are broken down as shown in Table 2-1. The EPA will operate, maintain, and calibrate the dynamometers. JACOBS will operate, maintain, and

calibrate the Constant Volume Sampler (CVS)-dilution tunnel systems for the collection of vehicle exhaust. JACOBS will be responsible for providing all sampling media used for this project. JACOBS will be responsible for all media preparation and pre-sampled media storage, except for the PM gravimetric media and cleaned passivated cans, which will be prepared and stored by EPA. JACOBS will be responsible for operating and maintaining the sampling trains and collecting samples for all media except for the PM (gravimetric and speciated). JACOBS will be responsible for post-test storage and analysis of all media sampled for regulated emissions, oxygenates, and semivolatile organic compounds (SVOCs) collected on PUFs or Carbotrap adsorbent tubes. EPA will be responsible for post-test storage and analysis of media sampled for PM gravimetric, PM speciated, carbonyls, VOCs, and PM particle counts/sizes.

JACOBS will be responsible for the chain of custody of the media used for carbonyls, VOC collected in SUMMA canisters, oxygenates and SVOCs before they are handed off for analysis. JACOBS will be responsible for the chain of custody of oxygenate and SVOC samples at all times.

Table 2-1. Project Responsibilities

Analysis Type	Media Type	Media Provider	Media Preparation/Pre-sampling Storage	Sample Collection	Post-test Storage and Analysis	Database	Report Preparation
Carbonyls	DNPH Cartridges	JACOBS	JACOBS	JACOBS	EPA	EPA	EPA
PM Gravimetric	47 mm Teflo Filters	JACOBS	EPA	EPA	EPA	EPA	EPA
PM Speciated	47 mm Tissue Quartz Filters	JACOBS	JACOBS	EPA	EPA	EPA	EPA
VOC	SUMMA Cans	JACOBS	EPA	JACOBS	EPA	EPA	EPA
Regulated Emissions	Tedlar Bags	JACOBS	JACOBS	JACOBS	JACOBS	EPA	EPA
Ethanol/Oxygenates	Water Impingers	JACOBS	JACOBS	JACOBS	JACOBS	JACOBS	EPA
PM Particle Size/Counts	Continuous	NA	NA	EPA	EPA	EPA	EPA
SVOC	Carbotrap Tubes	JACOBS	JACOBS	JACOBS	JACOBS	EPA	EPA
SVOC	PUF	EPA	JACOBS	JACOBS	EPA	EPA	EPA

The EPA will be responsible for receiving the sampled media for carbonyls, speciated VOC (Summa cans), Teflon filters for fine particulate gravimetric analysis, quartz filters for archiving. EPA will then be responsible for analyses of these media.

The EPA will operate the dynamometers and JACOBS will operate the CVS systems. The EPA will be responsible for post-processing the gaseous and fine particulate (gravimetric) regulated emissions. The EPA will be responsible for post-processing the speciated VOCs, SVOCs, and carbonyls data. The EPA will be responsible for post-processing of any PM speciated data generated. JACOBS will be responsible for post-processing water impinger samples for oxygenates.

JACOBS will collect two one liter samples of fuel and one sample of lubricant for fuel and lubricant analyses at an EPA-approved laboratory.

3. Scientific Approach

Exhaust emissions will be characterized for a number and class of vehicles specified in each WA addendum.

Class 2b and heavier-duty vehicles when tested on a chassis dynamometer will have either one or two load test conditions as follows:

- Adjusted Loaded Vehicle Weight, as defined in 40 CFR 1066.805 (b), which is the average of the curb weight and the GVWR, or
- Both:
    - Unladen representing the curb weight of the vehicle including a driver and the PEMS.
    - Laden representing ninety percent of the Gross Combined Weight Rating (GCWR) or if testing will also be conducted with a PEMS onroad, the curb weight of the vehicle including a driver and the PEMS added to the curb weight of a loaded cargo trailer.

Light duty vehicles (Class 1 through Class 2a) will be tested at their emissions certification inertial weight or, if testing will also be conducted with a PEMS onroad, the curb weight of the vehicle including a driver and the PEMS. The emissions certification inertial weight is 300 pounds added to the curb weight of the vehicle, also known as the "loaded vehicle weight" as defined in 40 CFR 1066.805 (b). If OTAQ has performed emissions certification on this make and model, the MSEMC team will utilize the inertial weight and target dynamometer coefficients used in previous testing. This will allow direct comparison of regulated emission factors with those certification test results.

Fuel will be gasoline from a local distributor so that it is representative of fuel that would typically be available to the local consumer at the pump except in the case of fuel effects studies in which case fuel properties will be specified in the WA addendum, 1065.701(d).

Testing will be performed at EPA's facilities located in EPA's Research Triangle Park, NC, campus.

The light-duty chassis dynamometer has a 200 hp (149 kW) capacity capable of simulating up to 15,000 pounds of vehicle inertia with the load passing through the 48" rolls, a Constant Volume Sampler (CVS) and associated sampling equipment. The environmental chamber can house a LDV and control the ambient temperature in a range from -20 °F (-20 °C) to 110 °F (43 °C). The humidity of the engine intake air can be controlled for 70 °F (21 °C) to 50 grains of H_2O per pound dry air. For other temperatures, or simulating vehicle weights over 14,000 pounds, humidity is not controlled (40 CFR 1066.420).

The heavy-duty chassis dynamometer facility has a 1000 hp (746 kW) capacity with the load passing through 72" rolls, a CVS and associated sampling equipment. Ambient air is provided by the house air and controlled by the building's HVAC. There is also no extra humidity control. Testing will be conducted when the house air temperature is between the 20 °C (68 °F) and 30 °C (86 °F) as allowed by 40 CFR 1065.125.

Measurements will include modal and bag regulated pollutants (gases only), fine particulate matter ($PM_{2.5}$) for total mass and particle size and number, selected MSAT compounds and oxygenates. Both modal and bag measurements will be taken for carbon monoxide (CO), carbon dioxide (CO_2), oxides of nitrogen (NO_X), nitrogen dioxide (NO_2), total hydrocarbon (THC), and methane (CH_4). PM mass will be characterized by gravimetric analysis of 47-mm filters, and particle size/counts will be determined by continuous measurement using an Engine Exhaust Particle Sizer (EEPS) model 3090, manufactured by Trust, Science, Innovation (TSI). The MSATs to be characterized include acetcarbonyl, formcarbonyl, acrolein, benzene, 1,3-butadiene, naphthalene, ethylbenzene, toluene, styrene, o-xylenes, m & p xylenes, n-hexane, and 2,2,4-trimethylpentane (isooctane). Volatile Organic Compounds (VOCs) will be analyzed using EPA Method TO-15, carbonyls will be analyzed using EPA Method TO-11a, SVOCs will be analyzed using EPA Method TO-17.

The EPA will operate, calibrate, and maintain EPA's chassis dynamometer and chassis dynamometer constant volume sampling systems (CVSs) located in EPA's Research Triangle Park, NC, campus with support from Jacobs personnel. JACOBS will support emissions testing over the test cycles and sequences as specified in the WA addendum. The testing protocols will comply with 40 CFR Parts 1065[4] and 1066[7]. Each warm start test condition will be run on each vehicle at least three times and a fourth test may be necessary if emissions criteria found in Table 3-1 are not met during the first three tests. The same driver will be used for all chassis dynamometer tests on each test vehicle.

Table 3-1. Acceptable Variability Criteria for Replicates

Dilute Gaseous Emission	Criteria for requiring a third test day (composite cycle emissions)
CO_2	Percent Standard Error of the Mean≤3%
NO_X	Percent Standard Error of the Mean≤10%
THC	Percent Standard Error of the Mean≤15%

[REF _Ref443402297 \h] and [REF _Ref443402297 \h] provide a schematic layout of the CVS system used for collection of diluted vehicle exhaust samples during transient driving simulations. These schematics show relative locations of sampling points and required sampling configurations for the compounds to be measured in each work assignment. As depicted in the schematic, continuous emission monitor systems (CEMS) will be utilized for sampling and measuring the regulated emissions, THC, CO, CO_2, CH_4, NO_2, and NO_X. The CH_4 and THC analyzers have dedicated probes and sample lines. NO_X, CO and CO_2 are collected from a shared probe and distributed through a manifold. NO_2 is on separate probe. The NO_2 analyzer requires a much lower flow rate and has a slower response time than the NO_X analyzer. CVS bags are also collected and analyzed using the regulated emission CEMS as a QA check.

Samples for ethanol measurements will be obtained using two chilled sampling impingers filled with deionized water for each applicable phase of the driving cycle for subsequent analysis by GC. Samples for VOC analysis will be collected into passivated canisters through a metered flow system. Samples for carbonyl measurements are collected through a heated sample line on DNPH cartridges.

Samples for $PM_{2.5}$ mass will be collected on 47-mm Teflon filters. Samples for $PM_{2.5}$ will also be collected on 47-mm quartz filters and archived for a future analysis (to be determined [TBD]). There are four PM sampling probes. Typically, a probe is configured for collecting PM2.5 samples for gravimetric analysis ([REF _Ref443470233 \h]) or for an analysis of the ratio of elemental carbon to organic carbon. Some studies will also require polycyclic organic matter (POM) samples to be taken ([REF _Ref443459319 \h]). Each study addendum will show the sampling scheme of each of the four probes and cyclones used along with their associated four legs in a figure. The PM sampling probes are located in the dilution tunnel a distance

of not less than ten times the diameter of the dilution tunnel downstream from the mixing orifice.

Samples for PM counts and size distribution will be collected from quarter-inch stainless steel probes located adjacent to the PM filter sampling location.

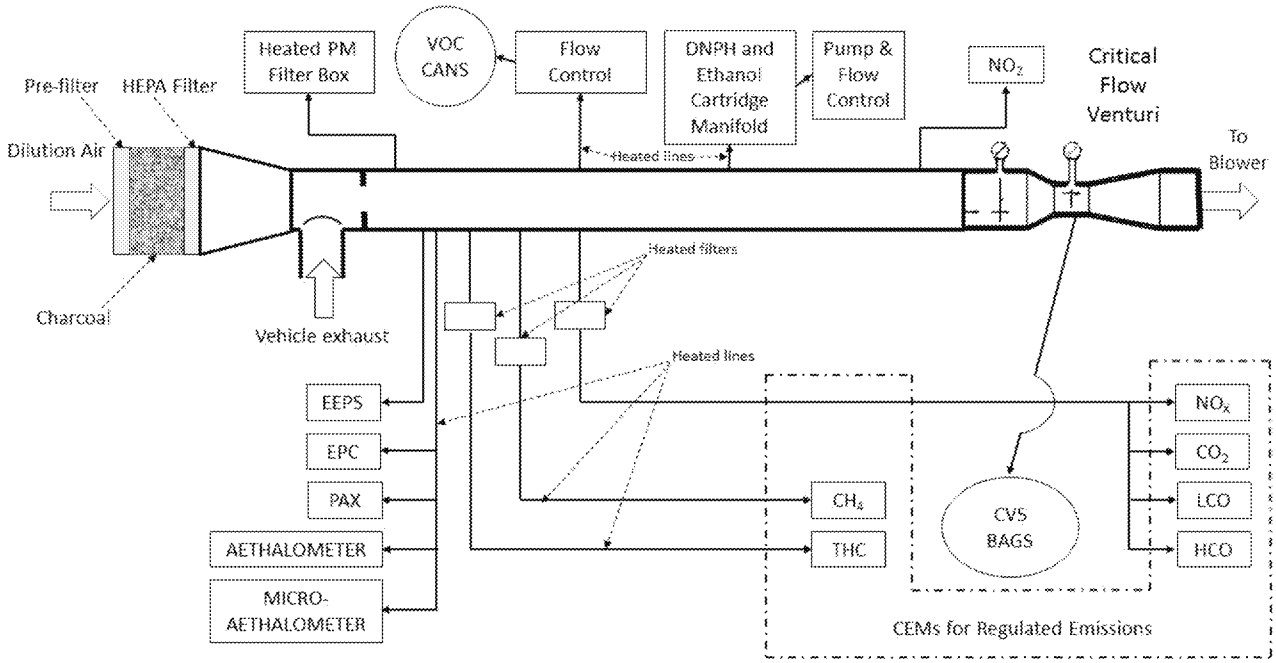

Figure [STYLEREF 1 \s]-[SEQ Figure * ARABIC \s 1] Light-Duty Dynamometer CVS Schematic

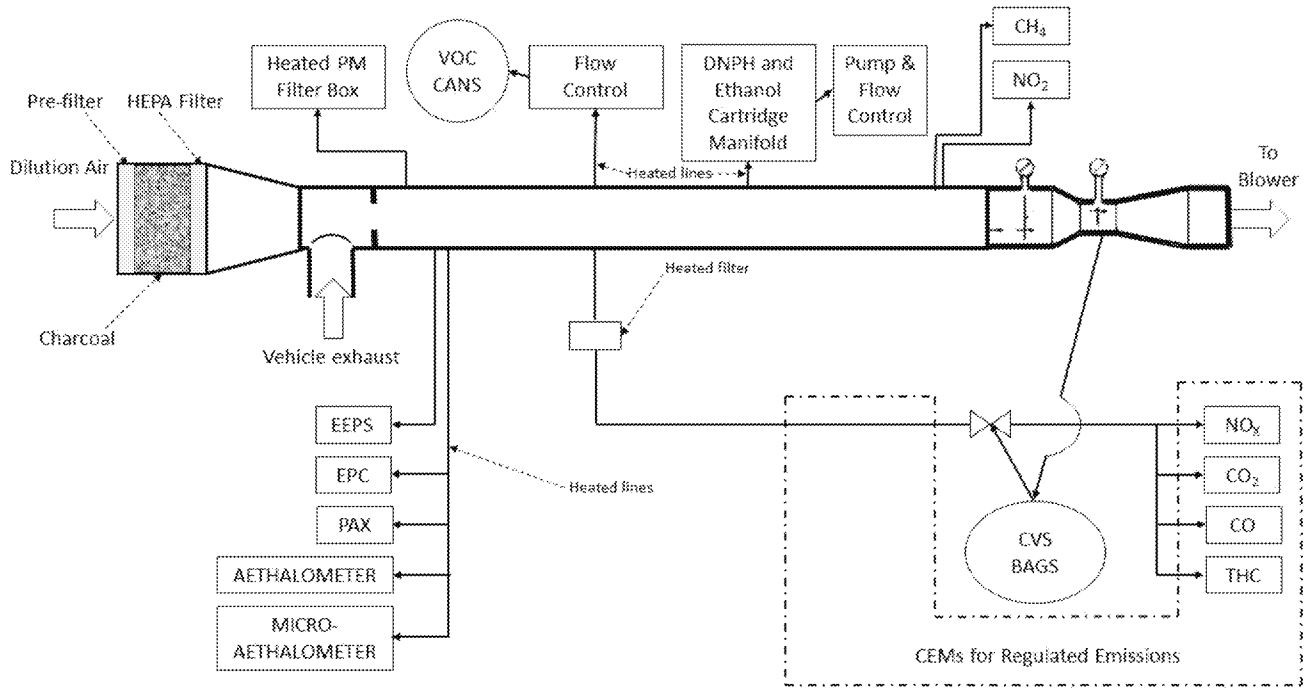

Figure [STYLEREF 1 \s]-[SEQ Figure * ARABIC \s 1] Heavy-Duty Dynamometer CVS Schematic

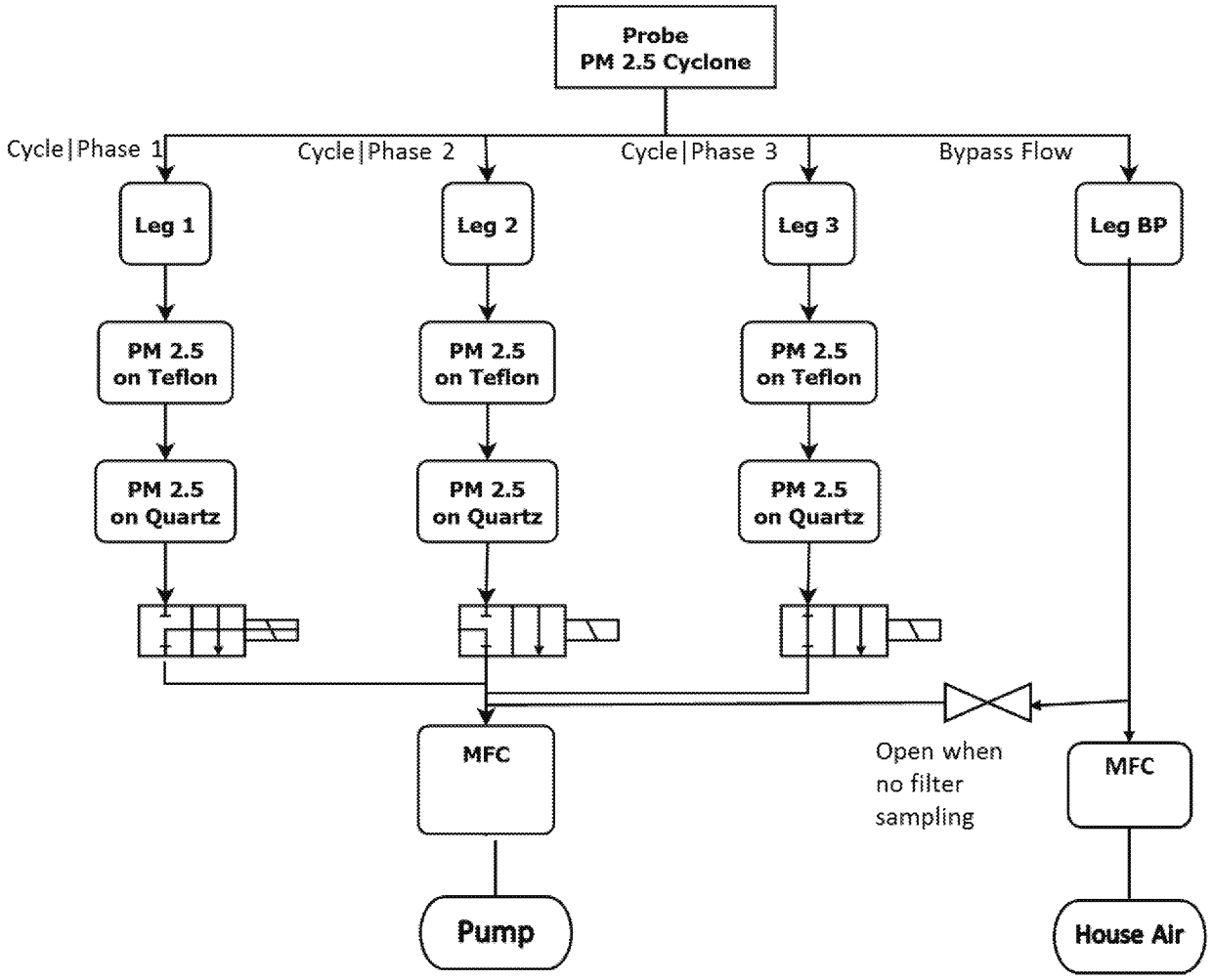

Figure [STYLEREF 1 \s]-[SEQ Figure * ARABIC \s 1]. Probe Sampling Schematic-Gravimetric PM

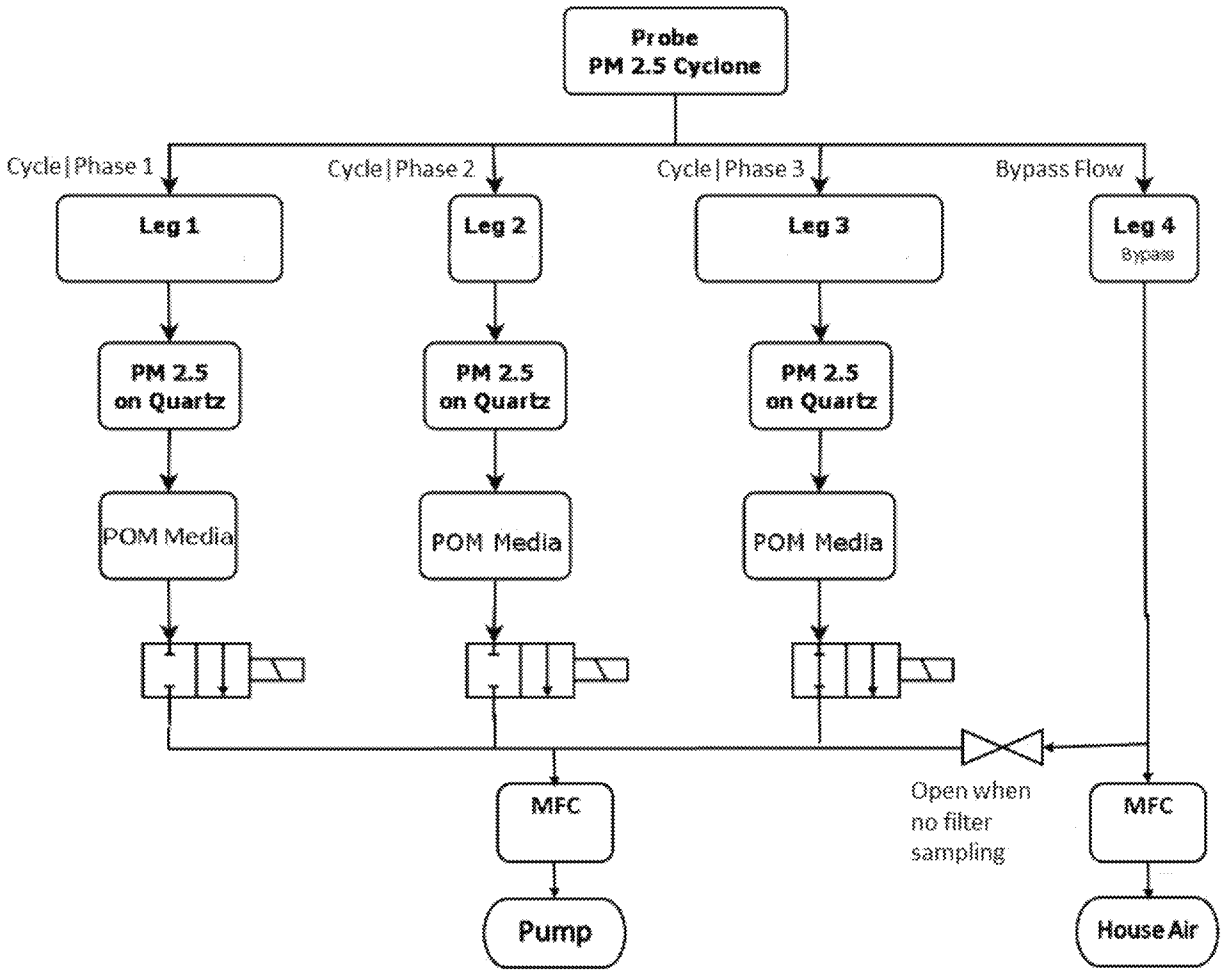

Figure [STYLEREF 1 \s]-[SEQ Figure * ARABIC \s 1]. Probe Sampling Schematic-POM ECOC

4. Sampling

4.1 Sampling Frequency/Test Matrix

The addendum for each work assignment will specify the range of the number of tests to be completed in any combination of the available test facilities (e.g. light-duty chassis dynamometer, heavy-duty chassis dynamometer, small engine dynamometer, or portable emissions measurement system). The addendum for each work assignment will specify the number and class of vehicles that will be tested. The addendum for each work assignment will specify the range of the number of replicates that will be required for each test condition.

As applicable to each work assignment, the addendum will provide a table of the test matrix for each facility that will be used. An example, of a chassis dynamometer test matrix is given in Table 4-1. The table shows that six replicates will be performed at each load condition for the warm start cycles and two for the cold start cycles. Three vehicles will be tested.

Table 4-1. Sample - Chassis Dynamometer Test Matrix

Veh #	Test Weight	Cold Start Replicates	Warm Start Replicates
1	Unladen	2	6
1	Laden	2	6
2	Unladen	2	6
2	Laden	2	6
3	Unladen	2	6
3	Laden	2	6

Because of the requirements of “cold-start” vehicle testing, the test vehicle must equilibrate at the test temperature for a period of 12 to 36 hours immediately prior to beginning each cold start test. For this reason, only one “cold-start” test may be performed per day on a vehicle.

Each emissions test will include a table of the types and number of samples as illustrated in Table 4-2. This table will specify the chassis dynamometer driving schedules (e.g., Heavy-Duty Urban Dynamometer Driving Schedule (UDDS)) or the onroad route(s) for PEMS tests. If the driving schedule will be broken into subparts, each phase will be represented in this table as well. This table will indicate which regulated emissions will be collected over each of the test phases or driving schedules.

Background samples for regulated emission analysis will also be collected for all test phases in Tedlar and/or Kynar CVS bags to satisfy requirements of the Code of Federal Regulations (CFR)[8]. The CEMS modal measurements do not include simultaneous background collection due to a lack of additional duplicate modal instrumentation. Therefore, background corrections for the modal data will be made using the background Tedlar and/or Kynar CVS bag measurements.

As applicable this table will also indicate the number of VOC, SVOC, and EC/OC samples which will be collected over each test. A background will be collected on each test day.

Separate carbonyl, oxygenate, and $PM_{2.5}$ samples will be collected for all chassis dynamometer test phases as well as for a background on each chassis dynamometer test day.

For chassis dynamometer testing, two samples will be collected per test phase for the $PM_{2.5}$ gravimetric samples collected on the Teflon filters. Only one gravimetric filter will be collected per phase for tests conducted at the heavy-duty dynamometer facility. A work assignment may also require one sample per test phase to be collected on quartz filters for archiving and future speciation using a TBD analysis. One background sample will also be collected per test for each emission type. Both gravimetric filters will be archived for future chemical analysis (one for thermal extraction, the other for organics from solvent extraction.

If speciation is required by the work assignment, VOC, carbonyl, oxygenate, and $PM_{2.5}$ sample field/lab blanks will be collected and analyzed on every week in which a vehicle test is performed. The passivated can, DNPH cartridge, and $PM_{2.5}$ Teflon filter used for blanks will be transported to the same collection location as those media in the same use during testing. For example, the $PM_{2.5}$ filters will be taken to the table beside the $PM_{2.5}$ cyclones, the DNPH cartridges beside the analytical bench, etc. The blanks will then undergo the same analysis as though they too had been used to collect samples.

Table 4-2. Sample - Types and Number of Samples per Test Day Sequence, Breakout by Test Cycle, Sampling Phase (Ph), Background (Bkg), and Total.

Sample Type	Media	CS Lower Trans	Warm Start Cycle	Bkg	Total
Regulated gaseous emissions	CVS Tedlar bag	1	3	4	7
Regulated gaseous emissions	CEMs (modal)	1	3	0	4
Particulate matter, gravimetric and metals	47 mm filter (Teflo, PallCorp R2PJ047)	1	3	1	5
Particulate matter, gravimetric and solvent extraction for organics*	47 mm filter (Teflo, PallCorp R2PJ047)	1	3	1	5
Particulate matter, EC/OC*	47 mm filter (Quartz)	1	3	1	5
Particulate matter, Artifact*	47 mm filter (Quartz)	1	3	1	5
Particle size/counts	EEPS (continuous) EPC (continuous)	1	3	1	5
VOCs	Passivated Can				
Carbonyls	DNPH cartridge	1	3	1	5
Oxygenates	Water impingers	1	3	1	5

4.2 Site-Specific Factors Affecting Sampling

Several site-specific factors may potentially impact sampling and should be monitored and/or controlled appropriately. These factors are described in the following sub-sections.

4.2.1 Pre-conditioning Dilution Air

Ambient air from within the building laboratory is used as dilution air for the vehicle exhaust. This dilution air is pre-conditioned to remove particulates and to stabilize hydrocarbon contaminants that may affect pollutant measurements. The conditioning includes a high-efficiency particulate air (HEPA) filter to remove fine particles and a charcoal bed to stabilize background HC levels. The charcoal bed cannot remove all contaminants, especially when contaminant concentrations are very high. Therefore,

operational staff needs to be alerted to potential sources of contamination, such as solvents, exhausts from nearby vehicles, and document in the laboratory notebook any observed sources of contamination. Background THC levels should be monitored prior to testing and testing should not commence until background THC levels are less than 4 ppm C.

The dilution air is maintained at laboratory facility temperatures (~ 70 °F).

4.2.2 Laboratory Conditions

Humidity and barometric pressure should have minimal impact on testing and sampling under our laboratory conditions. Both will affect vehicle operation and calibrated sampling flow rates but can be adequately accounted for by monitoring these parameters and applying the oxides of nitrogen correction factor. Test temperatures will have a large impact on vehicle emissions and should be controlled and monitored carefully. Test temperatures should have a minimal effect on sample collection, given that all sampling apparatus is operated at normal laboratory temperatures.

4.2.3 Sampling Trains

Much of the sampling apparatus incorporates heated sample lines and other heated components. Protective filters are also included in some of the sample streams to protect equipment from contamination. Checks are provided according to Appendix J, "JACOBS Protective Filter Check/Replace MOP", prior to the start of any test to insure that these components are operating correctly during testing. Temperatures as indicated on the digital temperature controllers are compared to setpoint temperatures, and any deviation from the setpoint in excess of that allowed by 40CFR1065.145(c)[9] will be cause for corrective action before proceeding with testing. Protective filters will be checked for loading according to the JACOBS Protective Filter Inspection MOP and replaced as indicated.

4.3 Site Preparation

The following site preparations are required prior to commencement of the test matrix:

- Procurement of calibration gases conforming to the standards of 40 CFR 1065.750. EPA Protocol gases meet this requirement and will be used. Concentrations will be 90 to 95 percent of the analyzer range to be used. EPA

Protocol Gases for CO, CO_2, and NO have pure Nitrogen as the diluent. Propane and methane use ultrapure air as the diluent.

- For testing on the light-duty chassis dynamometer (for both SI or CI vehicles) the nominal concentrations required are 90 to 95, 900 to 950, 4500 to 4750, and 9000 to 9500 ppm CO; 0.9 to 0.95 and 4.5 to 4.75 percent CO_2; 9 to 9.5, 90 to 95, and 900 to 950 ppm NO; 3, 30, and 300 ppm propane; 9 and 90 ppm methane.

- For testing SI or CI vehicles on the heavy-duty chassis dynamometer the nominal concentrations required for the dilute bench are 3, 150, and 300 ppm propane; 9 and 90 ppm methane; 9 to 9.5 , 90 to 95, 180 to 190, and 450 to 475 ppm NO; 45 to 47.5, 180 to 190, 900 to 950, 2250 to 2375 ppm CO; and 0.9 to 0.95 and 4.5 to 4.75 percent CO_2.

- For testing SI or CI vehicles on the heavy-duty chassis dynamometer the nominal concentrations required for the raw bench are 3, 150, and 300 ppm propane; 90 to 95, 450 to 475, 1350 to 1375, and 4500 to 4750 ppm NO; 45 to 47.5, 180 to 190, 900 to 950, 2250 to 2375, 4500 to 4750, 108000 to 114000 ppm CO; 0.9 to 0.95, 2.7 to 2.85, 9 to 9.5, and 22.5 to 23.75 percent CO_2; and 0.9 to 0.75, 2.7 to 2.84, 9 to 9.5 and 22.5 to 23.75 percent O_2

- For testing SI or CI engines on the small engine dynamometer the nominal concentrations required for the bench are 3, 30, and 300 ppm propane; 9 to 9.5 , 90 to 95, and 900 to 950 ppm NO; 90 to 95, 225 to 237.5, 450 to 475, 900 to 950, 9000 to 9500, 45000 to 475000 ppm CO; and 0.45 to 0.475, 0.9 to 0.95, 2.7 to 2.85, and 4.5 to 4.75 percent CO_2.

- For testing SI or CI vehicles on the PEMS the nominal concentrations required are 390 ppm propane; 1000 ppm NO; 200 ppm NO_2, 1200 ppm CO; and 12 percent CO_2.

- Gases named in accordance with 40 CFR 1066.135(a)(1) may be substituted for calibration gases applicable to the same range on a given analyzer.

- Procurement of test vehicles as specified in the WA addendum.

- Procurement of sampling media and other supplies. Required sampling media:

  - Teflon filters- Teflo 47mm PTFE 2.0 micron membrane filter Pall # R2PJ047

- Quartz filters- TissuQuartz QAT-UP/47 mm VRW#28150-901
- DNPH cartridges- Supelco LpDNPH H series cartridges H30
- Petri Dishes- Pall 7242

- Procurement of test fuel from a single batch representative of what is being locally distributed or a single batch of a fuel with custom properties specified in the work assignment.
- Initial calibration of regulated emissions CEMS, CVS flow rate, thermocouples, pressure transducers, and sample flow rates for any dynamometer laboratories to be used in the work assignment.
- Annual calibration of any dynamometer road load curves.
- Manufacturer calibration of all PEMS units to be used in the work assignment.

4.4 Test and Sampling Procedures

4.4.1 Vehicle Load Simulation and Operating Procedures

Vehicles heavier than Class 2b or physically too large to be tested on the light-duty chassis dynamometer will be tested on the heavy-duty chassis dynamometer. Road load simulation will be conducted on a 72" Renk dynamometer (heavy-duty dynamometer). Target vehicle road load coefficients for each test vehicle will be determined using the track coastdown techniques found in SAE J2263, *"Road Load Measurement Using Onboard Anemometry and Coastdown Techniques"* with the deviations cited in 40 CFR 1066 Subpart D[10]. Two test inertia weights will be used.

1. Laden = the measured curb weight of the vehicle with a PEMS unit plus 300 pounds for the driver plus the measured curb weight of the loaded cargo trailer.
2. Unladen = the measured curb weight of the vehicle with a PEMS unit plus 150 pounds for the driver.

If the work assignment does not require onroad testing with a PEMS, the weight of the PEMS will be set to zero in the above formulae.

Class 2a vehicles or lighter may be tested on the light-duty chassis dynamometer. Road load simulation will be conducted on a 48" Burke-Porter Motor-in-the-Middle (MIM) chassis dynamometer (heavy-duty dynamometer) capable of simulating up to 200 hp.

Target vehicle road load coefficients for each LDV will be taken from those used in certification testing when available. If certification coefficients are not available, they will be determined using the track coastdown techniques found in SAE J2263, *"Road Load Measurement Using Onboard Anemometry and Coastdown Techniques"* with the deviations cited in 40 CFR 1066 Subpart D[10]. The certification inertia weight will be used if available or the inertia will be set equal to the measured curb weight of the vehicle with a PEMS unit plus 150 pounds for the driver. If the work assignment does not require onroad testing with a PEMS, the weight of the PEMS will be set to zero in the above formula.

Dynamometer specific road load derivation will be performed for each vehicle using SAE J2264, "*Chassis Dynamometer Simulation of Road Load Using Coastdown Techniques*"[11].

Driving schedule, or test cycle, protocols will comply with 40 CFR Parts 1065 and 1066 and Part 86 Subpart N for HDVs and Part 86 Subpart C for LDVs. Each work assignment addendum will specify the number of replicates for each driving schedule as well as each phase of any multi-phase driving schedules (e.g., LA92). If the emissions criteria specified in Table 3-1 are not met over the number of replicates specified in the work assignment, an additional replicate will be executed. The same driver will be used for all chassis dynamometer tests on a given vehicle.

The sequence of events for chassis dynamometer testing requiring multiple fuels on an individual vehicle is summarized in the work assignment table, Fuel Change Sequence, e.g., Table 4-1. Each test day will be preceded by a prep cycle the previous day under the same inertial load condition. The need for a chassis dynamometer test day in addition to those scheduled in the test matrix will be determined based on the variability of the previous replicates (see Table 3-1).

Table [STYLEREF 1 \s]-[SEQ Table * ARABIC \s 1] Fuel Change Sequence

Step	Description
1	Warm up vehicle with a 10-minute idle immediately before fuel drain. Drain vehicle fuel completely via fuel rail whenever possible

2	Turn vehicle ignition to RUN position for 30 seconds to allow controls to allow fuel level reading to stabilize. Confirm the return of fuel gauge reading to zero.
3	Turn ignition off. Fill fuel tank to 40% with next test fuel in sequence. Fill-up fuel must be at 55 ± 5 °F.
4	Start vehicle, agitate the fuel by driving around the parking lot for 2 minutes, and then execute two back-to-back unsampled US06 cycles to purge sulfur from the catalyst. Alternately, at the special request of the EPA WAM, the sulfur removal procedure described in CRC E-60 Program report (Included as Appendix A of this QAPP) will be used to purge sulfur from the catalyst. Side cooling fans will be used to maintain air flow around the fuel tank ,and the engine oil temperature will be monitored during the sulfur removal cycle.
5	Perform four vehicle coastdowns from 70 to 30 mph, with the last two measured. If the difference between the last two coastdowns exceeds 0.5 seconds, or their average differs by more than ± 7% from the running average for that vehicle, then the vehicle will be checked for any obvious and gross source of change in its mechanical friction. Side cooling fans will be used.
6	Drain fuel and refill to 40% with test fuel. Fuel temperatures will be maintained at 55 ± 5 °F during fill up.
7	Drain fuel and refill to 60% with test fuel. Fuel temperatures will be maintained at 55 ±5 °F during fill up.
8	Soak vehicle for at least 12 hours to allow fuel temperature to stabilize to the test temperature.
9	Start vehicle and perform three LA-92 (phases 1 and 2) prep driving cycles. Following the first two prep cycles, allow the vehicle to idle in park for 2 minutes, and then shut the engine off for 2 to 5 minutes. Following the last prep cycle, allow the vehicle to idle for 2 minutes, and then shut down the engine in preparation for the soak. Side fans will be used to maintain air flow around the vehicle's fuel tank during the prep cycles.
10	(reserved)
11	Park vehicle in soak area at proper temperature (20 °F and 75 °F) for 12 to 36 hours. During the soak period, maintain the nominal charge of the vehicle's battery using an appropriate charging device.
12	(reserved)

Weighting factors will be used to calculate composite emissions and will report bag (phase) level and total test cycle work measured at the wheels.

Fuel will be stored in sealed containers (55-gallon steel drums) in the temperature controlled fuel storage shed located adjacent to Building E on EPA's RTP campus. The shed temperature will be controlled at 55 ± 2 °F (12.8 ± 1.1 °C) to minimize loss of volatile components and /or formation of condensation and the growth of microbes in the fuel using the shed's existing thermostated heating/cooling system.

In addition to manufacturer's analysis, all test fuels used will be analyzed independently for detailed HC (ASTM D6729)[14], Reid Vapor Pressure (ASTM D5191)[17], and Hydrogen/Carbon content (ASTM D5291)[19]. A fuel analysis will be performed before and after execution of the test matrix. The fuel analyses will be performed by Southwest Research Institute or the EPA OTAQ and results will be received, reviewed, and reported by the EPA MSEMC team.

Engine coolant temperature will be measured using an On-board diagnostic (OBDII) scanner manufactured by Autotap, AutoEnginuity, or their equivalent. OBDII diagnostic tools require that the vehicle's ignition switch be in the "on" position, so overnight logging using this tool is impractical. Its use should be satisfactory, however, for a 4- to 6-hour time period. Scanned temperatures will be logged to a CSV data file for future reference. Oil temperature from the vehicle's sump will also be measured and recorded prior to each test.

4.4.2 Dilution Tunnel/Constant Volume Sampler

The CVS and associated dilution tunnel will be calibrated and operated according to procedures found in CFR 40 Part 1065 Subpart D. Within this framework, the dilution tunnel will be operated at a an operating temperature of approximately 70 °F (21 °C) , but no less than 59 °F (15 °C) and nominal flow rate sufficient to keep the dilute exhaust above the dew point. The tube used to transfer raw vehicle exhaust to the dilution tunnel will have a wall thickness of less than 2mm or be air gap insulated to mitigate condensation. The calibration of the critical flow venturis (CFV) used to measure/control CVS bulk stream flow will be traceable to National Institute of Standards and Technology (NIST) standards. The calibration was performed by Colorado Engineering Experiment Station, Inc (CEESI) for the light-duty dynamometer. The manufacturer, Horiba, provided calibration certification for the heavy-duty dynamometer venturi. Bulk stream flow will be verified using propane injection techniques referenced later in Table 6-1.

4.4.3 Regulated Emission Sampling Procedure

Both modal and integrated regulated emissions will be sampled and measured.

4.4.3.1 Modal Regulated Emissions

Modal, or "real-time" regulated emissions will be sampled from the dilution tunnel when testing on a dynamometer. THC, CH_4, and NO_X will be sampled through their own heated filters and heated sample lines. Filter and sample line temperatures will be maintained at 235 °F (113 °C) for the THC and CH_4 CEMS and at 140 °F (71 °C) for the NO_X CEMS. Both the CO and CO_2 sample streams will be filtered, but unheated. Sampling flow rates will be regulated by the individual CEMS.

Most light-duty dynamometer bench CEMS utilized on this project are manufactured by California Analytical Instruments (CAI): Model 600-HFID heated flame ionization detectors (FID) are used for both THC and CH_4 analyses, a model 600-HCLD heated chemical analyzer for NO/NO_X analysis, and model 601 and 602 nondispersive infrared sensors (NDIR) for CO and CO_2 analyses. The NO_2 CEM is an Aerodyne Research Cavity Attenuated Phase Shift (CAPS) NO_2 monitor. The CAPS will be operated in accordance with the manufacturer's manual, Appendix R.

The heavy-duty dynamometer CEMs were manufactured by Peus and are integrated into an AVL control system. Sample transport times from the raw exhaust transfer tube to the individual CEMS were determined during instrument installation. These transport (delay) times are utilized by the control software to time align CEMS responses. In addition to the CEMS responses, the data acquisition system also continuously records CVS flow rates along with vehicle mileage and speed in order to calculate modal mass emissions according to CFR 1065 Subpart G[8]. The proprietary control system measures background concentrations prior to the start of each test to produce background corrections for all modal data. Additional modal mass emission rate calculations will be performed utilizing an alternate background correction in which background values as measured from each of the three background CVS bags will be utilized.

The data acquisition system logs sensor data at 1 hertz. Data logged includes outputs from the CEMs, and temperature, pressure, humidity and mass flow controller sensors. On the light-duty chassis dynamometer the data acquisition system is comprised of proprietary software from Environmental Testing Corporation (ETC) and analog-to-digital hardware modules from OPTO22. The software allows calibration of each

analog-to-digital modules for converting sensor outputs to engineering units. On the heavy-duty chassis dynamometer data is acquired by proprietary software from AVL. On the small engine dynamometer, data is acquired using commercially available DAQ software.

4.4.3.2 Integrated Regulated Emissions

Samples for integrated, or "bag", regulated emissions will be collected from the CVS into standard Tedlar CVS bags. Proportional sampling for the CVS bags is achieved using sampling venturis to regulate the sample flow to the bags. CEMS utilized for the bag samples are the same CEMS used for the modal analysis described above.

4.4.4 Particulate Matter ($PM_{2.5}$) Sampling Procedure

The determination of $PM_{2.5}$ mass emission includes filter custody, handling, gravimetric weighing, and operation of $PM_{2.5}$ sampling equipment. Duplicate (two) 47-mm Teflon membrane (Pall Corp., 2.0 µm Teflo R2PJ047) filters will be collected per each of the driving cycles and their individual phases (if applicable to that cycle). A background sample will also be collected and analyzed per every test day, and a field blank will be collected and analyzed once per week. Samples will be collected isokinetically at 92.7 lpm through a 2.5-µm cut-point cyclone. Sample flow rates will be regulated using mass flow controllers. The mass flow controllers will be calibrated using a NIST-traceable BIOS Dry Cal DC-1 piston type calibration device.

4.4.5 Carbonyl Sampling Procedure

Carbonyls will be sampled through a sample line heated to 235 °F (113 °C) at 1.0 lpm and collected on dinitrophenylhydrazine (DNPH)-coated silica gel cartridges. DNPH sample cartridges will be connected to a common, heated manifold, and sampling will be switched sequentially, cycle-by-cycle, through each cartridge using computer actuated solenoid valves. Sample flow rates will be regulated using mass flow controllers. The mass flow controllers will be calibrated using a NIST-traceable BIOS Dry Cal DC-1 piston type calibration device.

4.4.6 Ethanol Sampling Procedure

Samples for ethanol analysis will be collected on two sequential impingers which are placed in an ice bath and filled with deionized water. Samples will be drawn from the same heated sample line and manifold used for carbonyl sampling. Sample stream is

switched sequentially, cycle-by-cycle, through each set of impingers using computer actuated solenoid valves. Sample flow rates will be regulated using mass flow controllers. The mass flow controllers will be calibrated using an NIST-traceable BIOS Dry Cal DC-1 piston type calibration device.

4.4.7 VOC Sampling Procedure

Samples for VOC analysis will be collected in pre-cleaned 6-liter passivated canisters. Cleaning is done in accordance with TO-15. Cleanliness is verified by the use of a field blank once per week. Sample flows will be controlled by mass flow controllers. The mass flow controllers will be calibrated using an NIST-traceable BIOS Dry Cal DC-1 piston type calibration device.

For studies in which EtO will be reported, the sample lines will be coated with Silco. Samples will be collected into individually blank checks 6L Silco/Silonite lined sampling canisters. Samples will be analyzed by GC/MS operating in the Selective Ion Mode.

4.4.8 Engine Exhaust Particle Sizer (EEPS) Sampling Procedure

Sample will be drawn into the EEPS on a continuous basis using the internal sample pump of the EEPS (Appendix P). The EEPS will measure particle counts in specific size bins. Samples will be drawn from the dilution tunnel via a quarter-inch outside diameter (OD) stainless steel probe located within 12 inches of the PM filter sampling location. The EEPS will be operated according to the manufacturer's operation manual, and particle size bins will be fixed according to the manufacturer's default settings.

4.4.9 Portable Emission Measurement System (PEMS) Sampling Procedure

Testing will be conducted over the road with gaseous regulated emissions measured using PEMS units. PEMS will comply with the instrument requirements of 40 CFR 1065 Subpart C Measurement Instruments- PEMS instruments must comply with Subpart C, however procedures to verify the response of each continuously compensated analyzer will comply with 1065.920. The EPA uses two different models of Sensors SEMTECH PEMS, the SEMTECH ECOSTAR, typically at RTP, and the SEMTECH-DS, typically at Ann Arbor unless being used to supplement the ECOSTAR to simultaneously measure emissions for more than one vehicle. Both models comply with 40 CFR 1065 and measure the same gaseous analytes (CO and CO2 by non-

dispersive infrared (NDIR), NO and NO2 by non-dispersive ultraviolet, and THC by flame ionization detector).

Local routes will be selected to optimize the number of seconds in the VSP bins desired for the purposes of the specific work assignment. Each route will be repeated as often as possible on each test day. Unless the work assignment specifies an exception, each route focuses on the VSP bins in one of the three MOVES speed ranges, 0 to 25 mph, 25 to 50 mph, and over 50 mph. It is anticipated that data will be collected over each route a minimum of three times per load condition with a target of nine replicates per route and load condition.

Tests will be conducted in compliance with 40 CFR 1065 Subpart J Field Testing and Portable Emission Measurement Systems.

Core measurements will include total hydrocarbons (THC), oxides of nitrogen (NOX), nitrogen dioxide (NO2), carbon monoxide (CO), carbon dioxide (CO_2), and particulate matter (PM) on the chassis dynamometer. No PM measurements will be included in the onroad PEMS measurements. Due to the lack of methane instrumentation or oxygenate and carbonyl measurements in the PEMS units, no NMHC, or NMOG will be calculated from PEMS data.

If OTAQ provides an AVL Micro Soot Sensor (MSS), a work assignment may opt to include the measurement of PM mass concentrations during on road testing. The MSS operates based on the photoacoustic measurement principle. The MSS provides a minimum detection limit of 1 µg/m3. The MSS integrates automated thermophoretic loss compensation (TLC). The TLC function compensates the particle losses resulting from thermophoretic deposition at the sample point and enables an automatic calculation, display and logging of the loss corrected soot signal.

When PM measurements are taken on flow through media, the filter face temperature (FFT) shall be between 32 °C to 62 °C. The filter face velocity (FFV) will be between 5 and 100 cm/s. PM samples collected on flow through media will be analyzed in accordance with 1065.590 and 1065.595.

4.4.10 Photoacoustic Extinctiometer (PAX) Sampling Procedure

The PAX directly measures in-situ light absorption and scattering of aerosol particles, from which it derives black carbon mass concentration. A 1 liter/minute sample flow is drawn from the dilution tunnel via a quarter-inch outside diameter stainless steel probe

located within 12 inches of the PM filter sampling location into the PAX using an internal vacuum pump controlled by two orifices. The PAX will be operated according to the manufacturer's operation manual (Appendix N). Two PAX instruments will be used during the testing with the only differences in these is one have a wavelength of 870nm and the other has 532nm.

4.4.11 Micro Aethalometer Sampling Procedure

Samples will be drawn into a microAeth ® Model AE51 Aethalometer on a continuous basis using its internal. The Micro Aethalometer will measure black carbon using a filter. Samples will be drawn from the dilution tunnel via a quarter-inch outside diameter (OD) stainless steel probe located within 12 inches of the PM filter sampling location. A 3 mm spot is created on the filter strip containing insert of T60 Teflon-coated borosilicate glass fiber filter material. The Micro Aethalometer will be operated according to the manufacturer's operation manual and Appendix M.

4.4.12 Environmental Particle Counter (EPC) Model 3783 Sampling Procedure

Samples will be drawn into the water-based EPC on a continuous basis using an external pump. Samples will be drawn in the dilution tunnel via a quarter-inch outside diameter stainless steel probe located within 12 inches of the PM filter sampling location. The EPC will measure ultrafine particles down to 7 nm. The aerosol sample is pulled through a cool region saturated with water vapor and its temperature is equilibrated. The sample then goes to a growth section where wetted walls are heated to produce an elevated vapor pressure. The small cool particles grow into micron sized droplets. The droplets are passed through a laser beam and create a light pulse. Every particle pulse event is detected and counted. The particle concentration is measured by counting every single particle in the air stream. The EPC will be operated according to the manufacturer's operation manual (Appendix O).

4.5 Compositing/Splitting Samples

No splitting is expected in this project. Compositing is an option that may be taken if for the Carbotrap samples there are tests or phases of tests where the concentrations are falling consistently below the MDL.

4.6 Sample Quantities

Sample quantities for vehicle emission testing are usually expressed on a volumetric basis (volume of diluted exhaust sampled). Table 4-5 lists the approximate sample volumes collected and sample volumes required for analysis during a typical test phase.

Table 4-5. Volumetric Sample Quantities for a 300-Second Test Phase

Sample Type	Quantity Collected	Required for Analysis
Regulated gaseous emissions (modal)	50 L	25 L
Regulated gaseous emissions (bag)	100 L	75 L
Particulate Matter (gravimetric)	450 L	N/A
Particulate Matter (speciated)	450 L	N/A
Particulate Matter (EEPS)	50 L	50 L
Photoacoustic Extinctiometer (PAX)	5 L	5 L
Micro Aethalometer	750 mL	750 mL
Environmental Particle Counter (EPC)	3 L	3 L
VOCs	6 L	1 L
Carbonyls	5 L	N/A
Ethanol	15 mL (liquid)	1 µL

4.7 Collection, Transport, and Storage Containers

Table 4-6 lists the types of sample collection, transport, and storage containers utilized in this project.

Table 4-6. Sample Collection, Transport, and Storage Containers

Sample Type	Sample Collection	Sample Storage/Transport
Regulated gaseous emissions (bag)	Tedlar Bag (Plastic Films Enterprises T2-270212-400)	Tedlar Bag
Particulate Matter (gravimetric)	47 mm Teflon filter (Teflo, PallCorp R2PJ047)	Plastic Petri dish
Particulate Matter (speciated)	47 mm TissueQuartz filter (Pallflex QAT-UP/47mm diameter)	Plastic Petri dish
VOCs	Passivated canister (6 L as provided by EPA)	Passivated canister
Carbonyls	DNPH coated silica gel cartridge	DNPH coated silica gel cartridge
Ethanol	Water Impinger	Sealed vial
SVOCs	Carbotrap tube	Sealed tube

The large Tedlar and/or Kynar bags used for regulated emission samples are purchased commercially and are integrated into the CVS system. Tedlar and/or Kynar bags are checked for leaks and contamination according to CFR1065.345 and CFR1065.520(g), respectively, and are re-used on multiple tests until they fail to meet contamination and leak requirements. CVS bags failing to meet these requirements are replaced with new CVS bags.

4.8 Sample Preservation

After sample collection, and prior to analysis, collected samples should be stored according to the conditions given in Table 4-7.

Table 4-7. Sample Preservation Requirements

Sample Type	Storage condition	Method
Regulated gaseous emissions (bag)	Ambient	UV shielding at ambient laboratory temperatures
Particulate Matter	40CFR§86.112-91	Temperature and humidity-controlled weighing chamber
VOCs	Ambient	Laboratory
SVOCs	Ambient	Laboratory
Carbonyls	< 32 °F (0 °C)	Freezer
Ethanol	< 32 °F (0 °C)	Freezer
Test Fuels	Sealed, 55 ± 2 °F (12.8 ± 1.1 °C)	55-gallon drums inside temperature-controlled Fuel Storage Shed

4.9 Shipping Requirements

Test fuels will be analyzed off-site by the Office of Transportation and Air Quality. Fuel samples will be shipped via Fed Ex, in sealed, glass containers approved for shipping gasoline. The recommended container for Reid Vapor Pressure (RVP) is a 1-qt Boston round, amber glass, epoxy-coated bottle filled 70 to 80-percent full. This also provides enough capacity to do the other required tests.

It is anticipated that all remaining samples will be analyzed on site and so no other shipping is required.

Appropriate Chain of Custody (COC) documentation must accompany all samples sent off-site for analysis.

4.10 Holding Times

Maximum holding times vary by sample type. $PM_{2.5}$ filters are weighed within 56 hours of collection except for runs occurring on Fridays, in which case they are weighed first thing on Monday morning. They are held in a temperature and humidity controlled chamber. The temperature is maintained at 22±1 °C. The dew point is maintained at 9.5±1 °C. The dilute exhaust and background CVS bags are analyzed for regulated emissions within 1 hour of collection. DNPH cartridges will be kept in refrigerated storage for a maximum of 2 weeks prior to analysis for carbonyls. Ethanol vials may be

kept in refrigerated storage for a maximum of 6 days prior to analysis. Maximum hold times for canister VOC samples will be 7 days from sample collection.

Typically, $PM_{2.5}$ filters are post-weighed the day after sampling to allow for adequate equilibration in the weighing room, and DNPH cartridges are typically analyzed within 7 days of collection.

4.11 Sample Handling and Custody

Sample chain-of-custody requirements will follow standard Good Laboratory Practices[23] required for labeling, recording, and tracking all samples from collection through database archival. It will be the responsibility of the dynamometer test cell and analytical lab personnel to maintain internal logbooks and records that provide a custody record throughout sample collection, preparation, and analysis.

Identifying labels are attached to each sample collected. Label information will include the unique run number and phase(s), date/time of collection, sampler initials, analysis required, and any quality control (QC) information (e.g., blank). The sample labels permanently identify each sample collected and link each sample component throughout the analytical process.

In addition to the sample identification number, each sample container for analysis will be identified with a sample tag, if appropriate. These sample tags are retained by the laboratories as physical evidence of sample receipt and must therefore be signed by the sampling technician and analyst. The sample tag will contain an abbreviated summary of the field logbook entry for the sample.

Each emissions test is assigned a unique run number. This number is used to label and identify all samples collected during a particular test. The continuous data and bag data for regulated emissions are electronically collected and stored in a file with the run number included in the file name. The run number and phase is affixed to sample bags for oxygenate analysis, passivated canister for VOC analysis, and cartridges for carbonyl analysis. The run number and phase is then recorded electronically with the data generated by the respective analyzers.

$PM_{2.5}$ filters are stored in Petri dishes that have a unique identifier associated with the filter. This assures that the pre-weight and the post-weight apply to the same filter. When placed in use, the run number and phase is recorded alongside the Petri dish number.

All of these media tracking numbers are logged and available for inspection. Bill Preston (JACOBS) will serve as sample custodian and maintain a sample log for the ethanol and quartz filter samples. James Faircloth (EPA) will serve as sample custodian and maintain a sample log for PM gravimetric filters. An EPA NRMRL will serve as custodian for VOC and carbonyl samples. JACOBS will maintain sample logs documenting the transfer of custody for the VOC and carbonyl samples.

5. Measurement Procedures

Analytes to be measured for each sample and media type collected are listed in Table 5-1. This table includes analytes measured during sampling activities and those requiring laboratory analyses.

Table 5-1. Measured Exhaust Analytes

Sample Type	Media	Analytes
Regulated gaseous emissions	CVS Tedlar bag	CO, THC, CO_2, NO_X, NO_2, CH_4
Regulated gaseous emissions	CEMs (modal)	CO, THC, CO_2, NO_X, NO_2, CH_4
Particulate Matter	47 mm filter (Teflo, PallCorp R2PJ047)	$PM_{2.5}$ mass
Particulate Matter	47 mm filter (Pall TissueQuartz QAT-UP)	TBD
Oxygenates	Water impingers	Ethanol
VOCs	Passivated Can	Acrolein, benzene, 1,3 butadiene, ethylbenzene, toluene, o-xylene, m & p-xylenes, styrene, 2,2,4-trimethylpentane, n-hexane, naphthalene.
Carbonyls	DNPH cartridge	Formcarbonyl, acetcarbonyl
Particulate Matter	EEPS EPC	Particle size and counts
Black Carbon	microAeth®	BC mass concentration
Black Carbon	PAX (modal)	BC mass concentration Albedo

Analytical methods to be used for the accomplishment of the Statement of Work tasks are referenced in Table 5-2. The methods, standard operating procedures (SOP), or MOPs referred to in Table 5-2 are kept in or near the area in which the work is to be performed. These SOPs/MOPs may undergo revisions, or new SOPs/MOPs may be written, as new analytical equipment is received and new requirements are issued. The SOPs/MOPs supplement the instrument manufacturer's recommended practice. The WAM will be notified of any significant changes to the SOPs/MOPs used in the course of this project.

Table 5-2. Analytical Methods

Analyte/Parameter	Analytical Method	Method Reference	Responsible Party
Regulated Emissions (THC, CO, NO_X, CO_2)	CEMS	CFR Title 40, Part 1065.	EPA
Acrolein, benzene, toluene, 1,3-butadiene, o-xylene, m & p xylene, ethylbenzene, styrene, Naphthalene, n-hexane and 2,2,4-trimethylpentane **(ethylene oxide is optional)**	GC/MS	ECAB 144 (Appendix D) and EPA Compendium Method TO-15 (Appendix F)	EPA **Or JACOBS**
Formcarbonyl and acetcarbonyl	HPLC	EPA Compendium Method TO-11A (Appendix H)	EPA
Particulate Matter	Gravimetric	MOP Mass Measurements of Blank and Exposed Substrates (Appendix B)	EPA
Particulate Matter	Speciation	Chemical Analysis of Fine Particulate Matter (Appendix L)	JACOBS
Ethanol	GC	Modified CARB Method 101 (Appendices C and E)	JACOBS
Temperature	Thermocouple	Reference 24	EPA
Laboratory Weights and Mass Standards	Top Loading Balance	Reference 25	EPA
Chassis Dynamometer/CVS Sampling System	Various	40 CFR, Part 86, Part 1065.	EPA
Test Fuels – Speciated HC	GC	ASTM D 6729	OTAQ
Test Fuels	Distillation	ASTM D 86	OTAQ
Test Fuels	cloud point	ASTM D2500	OTAQ
Test Fuels	RVP	ASTM D 5191	OTAQ
Test Fuels	Hydrogen/Carbon content	ASTM D 5291	OTAQ
Test Fuels	Specific Gravity	ASTM D 1298	OTAQ
Test Fuels	Total Sulfur	ASTM D 2622	OTAQ
Test Fuels	Cetane number	ASTM D613	OTAQ
Test Fuels	biodiesel content	ASTM D7371	OTAQ

6. Quality Metrics (QA/QC Checks)

This section describes QA/QC techniques to be utilized to insure precise and accurate measurements for the project. A description of data analysis, data interpretation and data management is given later in Section 7. Reporting requirements are discussed in Section 8.

Timely calibrations, as required by SOPs and manufacturer's specifications, will be conducted for all test cell sampling systems and analytical instruments. Each piece of equipment or instrument is calibrated and maintained to assure accuracy and precision within specified limits. Calibration and maintenance procedures are detailed in the Dynamometer Test Facilities Manual of SOPs, which is available for inspection in the light-duty dynamometer area of operations. A copy of these and any other appropriate SOPs are kept on-site. The calibration of analytical instrumentation utilized in this project will be the responsibility of EPA personnel. The equipment used by JACOBS personnel to collect samples will be calibrated as required, according to manufacturer's procedures, or internal guidelines at recommended intervals. An equipment logbook will be kept on file that contains maintenance and repair reports for each piece of equipment. Calibration procedures and the results of each instrument calibration will also be kept on file on both magnetic storage media and in log books. The equipment and calibration logbooks will serve as a permanent record of maintenance/repairs and calibrations for the equipment.

In general, the QA/QC Plan provides for:

- Demonstration of initial instrument linearity and functionality with multipoint calibrations, with periodic follow-up multipoint calibrations or other vendor recommended calibrations.

- Availability of calibration standards with vendor accuracy certificates, and if possible, with direct comparison to NIST standards.

- Documentation of initial and periodic calibrations, functionality tests, and other instrument performance related activities.

- Use of SOPs/MOPs for data collection activities, which includes a test-to-test calibration or span procedure.

6.1 Calibrations and QC Checks

Procedures that will be used for the calibration of test equipment and analytical instrumentation used in the light- and heavy-duty vehicle emissions testing program are referenced in Table 6-1. Most of the procedures related to dynamometer and vehicle operation and regulated emission analysis are described in Title 40 of the CFR. Additional analytical procedures are described in method SOPs and/or MOPs on file in the test facility/laboratory.

6.2 Frequency and Acceptance Criteria for Calibrations and QC Checks

6.2.1 Frequency and Acceptance Criteria

Table 6-2 contains the expected calibration/QC check frequencies and associated acceptance criteria in terms of bias for test equipment and instrumentation utilized in this project. If the calibration and/or QC checks fall outside of the acceptance criteria, corrective action or re-calibration will be performed.

6.2.2 Measurement Quality Objectives

Suggested Measurement Quality Objectives (MQO) for critical measurements are described in Table 6-3. If at any time it is noted that deviations in measured values exceed MQOs, testing is stopped, equipment is examined, and testing is resumed after the problem has been corrected. The MQOs listed in Table 6-3 differ from the acceptance criteria found in Table 6-2 in that the MQOs encompass day-to-day variability based on daily instrument single-point spans while the acceptance criteria apply to monthly or other periodic multipoint calibrations.

For the continuous emission analyzers (THC, CO, NO_X,CO_2, NO), accuracy, precision, and completeness will be derived from the recorded instrument response to a known concentration of calibration gas, which is logged during each test. Analyzer accuracy will be determined for each test according to Section 6.2.5, using the instrument response as the C_{sample} value and using the calibration gas value as C_{std}. Analyzer precision will be determined as the coefficient of variation (CV) according to Section 6.2.4, using the mean and standard deviation for multiple (all tests) responses to the same calibration gas. Completeness will be calculated according to Section 6.2.6 as the percent of tests for which valid instrument responses to calibration gas exists.

Table 6-1. Calibration and QC Checks of Laboratory Test Equipment and Analytical Instrumentation

Analyte/Parameter	Procedure	Reference
THC/CH_4 CEMS	Response Optimization	CFR-1065.360
THC/CH_4 CEMS	Multipoint calibration	CFR-1065.307
THC CEMS	Methane Response	CFR-1065.360
THC/ CH_4 CEMS	Zero and Span Check	CFR-40 §86.140-94
CO CEMS	Interference Check	CFR-1065.350
CO CEMS	Multipoint calibration	CFR-1065.307
CO CEMS	Zero and Span Check	CFR-40 §86.140-94
NO_X CEMS	NO_X Converter Efficiency	CFR-1065,358
NO_X CEMS	Multipoint calibration	CFR-1065.307
NO_X CEMS	Zero and Span Check	CFR-40 §86.140-94
CO_2 CEMS	Multipoint calibration	CFR-1065.307
CO_2 CEMS	Zero and Span Check	CFR-40 §86.140-94
NO_2 CEMS	Multipoint calibration	CFR-1065.307
NO_2 CEMS	Zero and Span Check	CFR-40 §86.123-78(b)
Dynamometer	Coastdown	CFR-40 §86.118-78 CFR-40 §1066 Subpart D
CVS	Flow Verification (Propane Injection)	CFR-1065.341
CVS	Temperature	CFR-1065.315
CVS	Pressure	CFR-1065.315
CVS	Leak Check	CFR-1065.345
VOC	GC Response	EPA TO-15 (Appendix F)
VOC	Sample Flow Rate	CFR-1065.307
Ethanol	GC Response	ARB SOP No. MDL101
Ethanol	Sample Flow Rate	CFR-1065.307
Carbonyls	HPLC response	EPA TO-11a (Appendix H)
Carbonyls	Sample Flow Rate	CFR-1065.307
$PM_{2.5}$	Microbalance	Appendix B
$PM_{2.5}$	Sample Flow Rate	CFR-1065.307
Cold Cell	Temperature	CFR-1065.315
Fuel Storage Shed	Temperature	CFR-1065.315
Heated Sample Lines	Temperature	CFR-1065.315

Table 6-2. Frequency and Acceptance Criteria for Calibrations and QC Checks

Analyte/Parameter	Procedure	Frequency	Acceptance Criteria
DYNO THC CEMS	Methane Response	Annually*	-
DYNO THC CEMS	Response Optimizations	Annually*	-
DYNO THC CEMS	Multipoint calibration	Monthly	**
DYNO THC CEMS	Zero and Span Check	Per test	± 2 %
DYNO CO CEMS	H_20/CO_2 interference check	Annually*	< 3 ppm
DYNO CO CEMS	Multipoint calibration	Monthly	**
DYNO CO CEMS	Zero and Span Check	Per test	± 2 %
DYNO NO_X CEMS	NO_X Converter Efficiency	Monthly	> 95 %
DYNO NO_X CEMS	Multipoint calibration	Monthly	**
DYNO NO_X CEMS	Zero and Span Check	Per test	± 2 %
DYNO NO_2 CEMS	Multipoint calibration	Monthly	**
DYNO NO_2 CEMS	Zero and Span Check	Per Test	± 2 %
DYNO CO_2 CEMS	Multipoint calibration	Monthly	**
DYNO CO_2 CEMS	Zero and Span Check	Per Test	± 2 %
PEMS THC CEMS	Methane Response	Annually by mfg*	-
PEMS THC CEMS	Response Optimizations	Annually by mfg*	-
PEMS THC CEMS	Multipoint calibration	Annually by mfg*	
PEMS THC CEMS	Multipoint calibration check	Monthly	**
PEMS THC CEMS	Zero and Span Check	Per test	± 2 %
PEMS CO CEMS	H20/CO2 interference check	Annually by mfg*	< 3 ppm
PEMS CO CEMS	Multipoint calibration	Annually by mfg*	**
PEMS CO CEMS	Multipoint calibration check	Monthly	**
PEMS CO CEMS	Zero and Span Check	Per test	± 2 %
PEMS NO_X CEMS	Multipoint calibration	Annually by mfg*	-
PEMS NO_X CEMS	Multipoint calibration check	Monthly	**
PEMS NO_X CEMS	Zero and Span Check	Per test	± 2 %
PEMS NO_2 CEMS	Multipoint calibration	Monthly	**
PEMS NO_2 CEMS	Multipoint calibration check	Monthly	**
PEMS NO_2 CEMS	Zero and Span Check	Per Test	± 2 %
PEMS CO_2 CEMS	Multipoint calibration	Monthly	**
PEMS CO_2 CEMS	Multipoint calibration check	Monthly	**
PEMS CO_2 CEMS	Zero and Span Check	Per Test	± 2 %
Dynamometer	Coastdown	Daily	± 1 sec
CVS	Flow Verification	Yearly	****
CVS	Temperature	Yearly	***
CVS	Pressure	Yearly	***
CVS	Leak Check	Weekly	< 2 psi / hr
VOC	GC Response	Daily	± 10 %

Analyte/Parameter	Procedure	Frequency	Acceptance Criteria
VOC	Sample Flow Rate	Yearly	****
Ethanol	GC Response	Daily	± 10 %
Ethanol	Sample Flow Rate	Yearly	****
Carbonyls	HPLC response	Daily	± 10 %
Carbonyls	Sample Flow Rate	Yearly	****
$PM_{2.5}$	Microbalance	Monthly	± 5 µg
$PM_{2.5}$	Sample Flow Rate	Yearly	****
Cold Cell	Temperature	Yearly	***
Fuel Storage Shed	Temperature	Yearly	***
Heated Sample Lines	Temperature	Yearly	***

* Annually or at project inception, whichever comes first.
** Perform Linear Squares Fit of CEM response vs. concentration and calculate the slope (b), intercept (a), R2, and SEE of best fit line. Acceptance criteria as follows: 0.99 to 1.01; a ≤ 0.5* Full Scale Concentration; R2 ≥ 0.998; SEE ≤ 1% of Full Scale concentration
*** Perform Linear Least Squares Fit of sensor response vs reference value and calculate the slope (b), intercept (a), R2, and SEE of best fit line. Acceptance criteria as follows: 0.99 to 1.01; a ≤ 1.0* Full Scale ; R2 ≥ 0.998; SEE ≤ 1% of Full Scale
**** Perform Least Squares Fit of sensor response vs reference value and calculate the slope (b), intercept (a), R2, and SEE of best fit line. Acceptance criteria as follows: 0.98 to 1.02; a ≤ 1.0* Full Scale ; R2 ≥ 0.990; SEE ≤ 2% of Full Scale

Table 6-3. Measurement Quality Objectives (MQO)

Requirement	Frequency	Acceptance Criteria	40 CFR Reference	Notes
Sample Flow Rates (Carbonyls, Ethanol, VOC, PM)				
Multipoint Flow Verification	370 days	Pass/Fail	1065.307	Performed by Met Lab
Leak Check (all except PM)	Daily	< 0.5 % of in-use flow rate	1065.345(e)	
Leak Check (PM only)	Monthly	< 0.5 % of in-use flow rate	1065.345(c)	

Requirement	Frequency	Acceptance Criteria	40 CFR Reference	Notes
Sample proportionality to CVS flows	Every test	SEE ≤ 3.5 % of mean sample flow	1065.545	
Flow Rate (Constant Volume Sampler)				
Venturi Flow Calibration	Initial Installation	n/a	1065.340	Performed by EPA OTAQ recommended vendor.
CVS Verification (propane injection)	Monthly	Recover ± 2 % of propane injected	1065.341	
Barometric pressure, venturi inlet temperature and inlet pressure multipoint verification	Annually	Pass/fail	1065.307	Performed by Met Lab
Test Distance and Road Load Simulation				
Dynamometer speed multipoint verification	Annually	Pass/Fail	1066.220	
Dynamometer torque multipoint verification	Annually	Pass/Fail	1066.220	
Torque sensor zero	Daily	0 ± 1 lb.	n/a	Follow dynamometer manufacturer's automated procedure to adjust.

Requirement	**Frequency**	**Acceptance Criteria**	**40 CFR Reference**	**Notes**
Verify dynamometer road load and inertia simulation accuracy via vehicle-off-roll coastdown.	Daily	Expected coastdown time within ±1 sec of measured coastdown time for all 5 speed intervals.	86-118.78	
Verify dynamometer + vehicle road load and inertia simulation accuracy via vehicle-on-roll coastdown.	Daily	Expected Hp within ±15 % of measured Hp for all 5 speed intervals	n/a	Follow procedureCFR-118.78. Criteria is set by WAM.
Verify correlation between commanded test speed trace and actual speed	Every test	$R^2 > 0.98$	n/a	Criteria set by WAM
Criteria gaseous pollutants (CO, CO2, NOx, NO, NO_2, THC, CH4)				
Multipoint verification	Monthly	Pass/Fail	1065.307	
CVS Bag leak check	Daily	< 0.5 % of in-use flow rate	1065.345(e)	
Zero/Virtual zero	Every test		1065.530(B)(10)	
Accuracy, One-point span	Every test	± 1 % full scale	n/a	Criteria set by WAM
Precision, from mean and standard	Project duration	± 1 % full scale	n/a	Criteria set by WAM

Requirement	**Frequency**	**Acceptance Criteria**	**40 CFR Reference**	**Notes**
deviation of one-point spans				
CEM sample flow vs zero/span flow	Every sample	Difference < 2%	n/a	Criteria set by WAM
Verification of EPA protocol gas expiration dates	Monthly	No expired gases to be used	1065.750	
PM Gravimetric				
Sampling				
Sampling Filter Face velocity	Every test	< 100 cm/sec	1065.170	
Sampling Filter Face temp	Every test	47±5 C	1065.140	
Blank Filter	Weekly	Net weight gain < background filters	n/a	Criteria set by WAM
Microbalance				
Independent Performance Verification	Yearly		1065.390	Performed by Met Lab
Auto Zero/Span Calibration	Daily		1065.390	Automated function of microbalance
Balance check, zero tare	Every filter	± 1 ug	n/a	Criteria set by WAM

Requirement	**Frequency**	**Acceptance Criteria**	**40 CFR Reference**	**Notes**
Balance check, reference filter	Before and after each weighing session, and after every 10th sample filter	± 10 ug	1065.390	
Precision, from reference filter weighings	Project duration	Standard Deviation < 5 ug	n/a	Criteria set by WAM
Conditioning Environment				
Dew Point	Daily	9.5 ± 1°C	1065.190	
Temperature	Daily	22 ± 1°C	1065.190	

For the GC, High Performance Liquid Chromatograph, and PM balance, accuracy and precision will be determined from periodically challenging instruments with a known concentration or weight. The challenge will be performed at least weekly. Accuracy and precision will be calculated according to Sections 6.2.5 and 6.2.4. Completeness will be determined as the percent of samples analyzed for the body of tests performed.

Table 6.3 presents nominal MQOs. These MQOs may be modified in cooperation with the EPA WAM based on results of on-going testing.

6.2.3 Method Detection Limits

[SEQ CHAPTER \h \r 1]The method detection limit (MDL) is defined as the minimum concentration of a substance that can be measured and reported with 95-percent confidence that the analyte concentration is greater than zero and is determined from analysis of a sample in a given matrix containing the analyte.

The equation to determine the MDL for a given analyte is:

$$MDL = t_{(n-1,\ \alpha = 0.95)}s$$

where, $t_{(n-1,\ \alpha = 0.68)}$ represents the Students' t value appropriate for a 95-percent confidence level (2.5% one-tailed) and a standard deviation estimate with n-1 degrees of freedom. The value for *s* is typically based on seven samples.

This value is obtained from analyzing standard samples containing a target analyte concentration between the instrument detection limit (IDL) and the lowest target analyte mass expected to be observed (or blank filters for filter media). For integrated samples, this value is divided by the theoretical sample volume (e.g., for 24-hour PM sample collected on a HI 10 LPM sampler, divide by 14.4 cubic meters). The method quantification limit (MQL) is defined as three times the MDL to allow for a factor of safety over the MDL.

This statistical analysis was performed on the GCs, the CEMs, and the PM2.5 microbalance for compounds of interest and are presented in Table 6-4. In both the mass based and the concentration based measurements, miles traveled and total CVS air volume directly effect the MDL calculation, hence differences in the phase 1 and phase 2 MDLs for any particular compound. In addition, for compounds *measured* on a *mass* basis (PM, formcarbonyl, acetcarbonyl, and ethanol), sample volume has a direct impact on the calculated MDL, so these compounds will have a different Ph1/Ph2 MDL ratio than the remaining, *concentration* based measure, compounds.

The heavy-duty CEMs, carbonyls, and VOCs as well as the light-duty NOCEM analyses have not been performed prior to this test protocol. The light-duty dynamometer facility CEMS, carbonyls, and VOCs analyses have not been completed for the HD-UDDS driving cycles. These MDLs will be ascertained in accordance with the above methodology prior to executing the test matrix.

6.2.4 Precision

[SEQ CHAPTER \h \r 1]Precision is the agreement between the measurements collected by two or more identical devices or measures under similar conditions. Collection of collocated duplicate samples provides information on the variability in the sample collection, handling, storage, and analysis. Precision is reported as a coefficient of variation (*CV*) between replicate samples or sample analyses.

[EMBED Equation.3]

where s = sample standard deviation and [EMBED Equation.3]= sample mean.

Precision will be evaluated for GC and high performance liquid chromatographs and determined from the equipment specifications for the regulated emissions analyzers and the microbalance used to weigh $PM_{2.5}$.

Table 6-4. Minimum Detection Limits (MDLs) for Analyte List

Analyte	Units	MHDT Lo Spd Trans	HD-UDDS
LD-Dynamometer Bench			
CO bag	g/mile	TBD	TBD
CO modal	g/mile	TBD	TBD
CO_2 bag	g/mile	0.02	TBD
CO_2 modal	g/mile	0.066	TBD
NO bag	g/mile	na	TBD
NO modal	g/mile	TBD	TBD
NO_X bag	g/mile	.02	TBD
NO_X modal	g/mile	.038	TBD
THC bag	g/mile	.017	TBD
THC modal	g/mile	0.058	TBD
CH4 bag	g/mile	.002	TBD
CH4 modal	g/mile	.005	TBD
PM2.5	mg/mile	TBD	TBD
Formcarbonyl	µg/mile	TBD	TBD

Acetcarbonyl	µg/mile	TBD	TBD
Acrolein	µg/mile	TBD	TBD
Benzene	µg/mile	TBD	TBD
1,3 Butadiene	µg/mile	TBD	TBD
Ethylbenzene	µg/mile	TBD	TBD
Toluene	µg/mile	TBD	TBD
m,p Xylene	µg/mile	TBD	TBD
o Xylene	µg/mile	TBD	TBD
Styrene	µg/mile	TBD	TBD
n-Hexane	µg/mile	TBD	TBD
Isooctane	µg/mile	TBD	TBD
Naphthalene	na	na	na
Ethanol	mg/mile	TBD	TBD
HD-Dynamometer Bench			
CO bag	g/mile	TBD	TBD
CO modal	g/mile	TBD	TBD
CO_2 bag	g/mile	TBD	TBD
CO_2 modal	g/mile	TBD	TBD
NO bag	g/mile	na	TBD
NO modal	g/mile	TBD	TBD

NO_X bag	g/mile	TBD	TBD
NO_X modal	g/mile	TBD	TBD
THC bag	g/mile	TBD	TBD
THC modal	g/mile	TBD	TBD
CH4 bag	g/mile	TBD	TBD
CH4 modal	g/mile	TBD	TBD
PM2.5	mg/mile	TBD	TBD
Formcarbonyl	µg/mile	TBD	TBD
Acetcarbonyl	µg/mile	TBD	TBD
Acrolein	µg/mile	TBD	TBD
Benzene	µg/mile	TBD	TBD
1,3 Butadiene	µg/mile	TBD	TBD
Ethylbenzene	µg/mile	TBD	TBD
Toluene	µg/mile	TBD	TBD
m,p Xylene	µg/mile	TBD	TBD
o Xylene	µg/mile	TBD	TBD
Styrene	µg/mile	TBD	TBD
n-Hexane	µg/mile	TBD	TBD
Isooctane	µg/mile	TBD	TBD

Naphthalene	na	na	na
Ethanol	mg/mile	TBD	TBD

6.2.5 Accuracy

[SEQ CHAPTER \h \r 1]Accuracy is the measure of the closeness of a measured value to a known or true value, and includes both random error (precision) and systematic error (bias). Bias is the distortion of the data in a consistent direction due to measurement or analytical error. Measurement and analytical bias should be estimated using materials as independent as possible from the measurement system.

Measurement accuracy will be reported as a comparison between the measured sample concentration and the concentration of a known standard:

[EMBED Equation.3]

where C_{std} and C_{sample} are the values for the standard and the sample, respectively. Measurement accuracy for instrumentation typically is determined by the validation of the instrument performance during instrument development. For continuous monitors, accuracy also is determined during instrument calibration certification.

[SEQ CHAPTER \h \r 1]There are no true reference samples for size and concentration measurements of airborne particulate PM. Therefore, accuracy for PM samples cannot be inherently determined.

Accuracy will be evaluated for GCs and high performance liquid chromatographs and determined from the equipment specifications for the regulated emissions analyzers and the microbalance used to weigh $PM_{2.5}$.

6.2.6 Completeness

[SEQ CHAPTER \h \r 1]Completeness is a measure of valid data obtained from each metric. Completeness consists of sample collection and analysis components. Completeness requirements for sample collection and analysis aspects are presented because their relative importance varies between metrics. Completeness is typically defined as follows for all chemical and physical measurements:

[EMBED Equation.3]

where V is the number of measurements judged valid, and N is the number of measurements planned.

6.2.7 Consistency

All regulated emissions (THC, CO, NO_X, and CO_2) are continuously logged electronically during the execution of the test cycle. In addition, bag samples are collected during the execution of each phase and the emissions are analyzed subsequent to the execution of the cycle. By comparing the bag data to the continuous data for consistency, one can ascertain whether there is reasonable confidence that the accuracy and precision of the analyzer have not been unduly compromised by the overall system. Typically, bag and continuous data differ by less than 10 percent. In the event, that THC varies by more than 10 percent between the bag and continuous data, testing will halt while the source of the discrepancy is investigated and corrective action, if required, is completed.

6.2.8 Assessment and Response Actions

Corrective actions are initiated as a result of internal QC checks that reveal instruments or systems operating outside the range required for acceptable data, or in the event of any system failure. For example, corrective action will be performed for the following conditions: analytical or other measurement systems producing unacceptable tolerances according to method acceptance criteria, analytical precision outside of the stated MQOs, and analytical accuracy outside acceptability range as defined by the MQOs.

A “closed loop” system is used for corrective action, including the following elements.

- Problem definition
- Assignment of responsibility for investigation of the problem
- Problem investigation
- Determination of appropriate corrective action
- Implementation of corrective action
- Verification of problem correction
- Implementation and dissemination of procedural changes, if any

To enhance the timeliness of corrective action and minimize the generation of unacceptable data, problems identified by internal QC checks will be resolved at the lowest possible management level. Out-of-control conditions (indicated by their QC data) will be corrected by using the corrective action information contained in the SOPs referenced in this QAPP. Any problem and corrective action taken will be reported to the WAL and the EPA WAM.

Problems involving any change in scheduling, the sample work plan, or performance of analytical tasks will be handled in a manner agreed upon by the JACOBS WAL and the EPA WAM.

6.2.9 Performance and System Audits

Performance audits typically include the submission of blind samples such as NIST Standard Reference Materials in an appropriate matrix, and comparison of their results with the certified values. Systems audits typically include examination of sampling and packaging procedures, as well as examination of records from calibration and maintenance of field analytical equipment and evaluating the training/performance of field and laboratory personnel.

External audits are not specifically required by the QA Category IV status of this WA. The EPA QA Manager or his/her assignee may perform internal checks for sampling and sample analysis activities according to guidelines established by 48 CFR Part 46 - Quality Assurance FAC 97-14, November 23, 1999, and the EPA QA/R-5 March 2001, EPA Requirements for Quality Assurance Project Plans. These QC checks may include duplicate samples, matrix spikes, surrogates, and blanks for each type of sample as described in the relevant analytical methods and any QA/QC sample matrix provided independent of the quarterly audits for speciated hydrocarbons, and other compounds monitored in this project.

Data will be examined for compliance with all QC/QA requirements. Notations will be made concerning any deviations from these criteria.

Outliers Method A – Wide variations in values are unacceptable. A valid statistical method contained in ASTM Standard E 178-80 (Standard Practice for Dealing with Outlying Observations) can be used to identify data points that lie outside acceptable limits and thus would have a disproportionate effect. If a value is determined to be an outlier utilizing the ASTM E 178-80 Method, the result will be flagged and its use will be determined by the EPA WAM.

Outliers Method B – This method should be used where fewer than 9 data points have been measured. This method involves evaluating the interquartile range (IQR) of the sample set and using this value to estimate the 95-percent confidence level. The IQR is determined by arranging the data in numerical order from the lowest to highest sample value. The median of the data set is calculated. Without considering the value of the data, the datum that lies halfway between the median and the highest datum is identified. This value is the upper quartile. The datum that lies halfway between the median and the lowest datum is the lower quartile. Where there are an even number of samples, the median and the upper and lower quartiles are determined by calculating an average. For example, if there are eight samples, the median will be the average of the 4th and 5th data, the lower quartile will be the average of the 2nd and 3rd data, and the upper quartile will be the average of the 6th and 7th data. The IQR is then calculated as the difference between the upper quartile and the lower quartile. The background value at a 95-percent confidence level is estimated as the median of the data plus two times the IQR. While outlying data should not be excluded from the determination of the IQR, it should not be used to define the background value. Outliers are defined by data that lies outside the interval defined by the median plus three times the IQR.

Appropriate notations will be made in the summary report concerning the rejection of any data as outliers.

6.3 Field Notes and Records

All calibrations, repairs and maintenance, and modifications to system instrumentation will be recorded chronologically in a single bound laboratory notebook, maintained by the operating technician. This notebook is also used to record daily testing information and other related activities. QC activities performed by the operating technician will be reviewed and summarized by a designated senior staff member, in this case the EPA Senior Technician. A QC notebook (3-ring binder) will be prepared and will consist of QC summaries prepared from information within the laboratory notebook, analyses, and certificates for reference materials. Any QC activities conducted by JACOBS will be reported in the Monthly Technical Progress Reports available to the EPA WAM. In addition, the laboratory notebook and QC notebook will be readily available for inspection by upper management.

7. Data Analysis, Interpretation and Management

7.1 Data Analysis

The primary data product to be reported from this study will be vehicle emission rates. In support of reported emission rates, additional analyses and test parameters will also be reported, including fuel analyses, vehicle fuel economy, test temperatures, flow rates, etc. Raw data will be reduced to pollutant emission rates using calculations found in CFR, Title 40, Part 86. Raw data may come from several sources, including the test cell operator (regulated emissions and vehicle data), the in-house chromatography laboratory (ethanol) or from independent laboratories (carbonyls, oxygenates, VOCs). Raw data files from the various sources will be integrated into a single spreadsheet file, from which all calculations and reporting will be performed.

7.2 Data Interpretation (Units of Measure)

Emission rates will be reported for each test performed, and will include emission rates each driving cycle, as well as a composite emission rate from the same cycle. The composite emission rate is a weighted average for all three test phases, and will be calculated using the phase weighting factors identical to those used for the Federal Test Procedure (FTP). Table 7-1 lists the pollutants, and other data types, to be reported along with the reporting units. For onroad testing, regulated emissions will be reported on a grams per vehicle specific power basis. Emission rates will be evaluated over four speed ranges: zero miles per hour or decelerating, greater than zero and less than or equal to 25 miles per hours, greater than 25 and less than or equal to 50 miles per hour, and over 50 miles per hour.

Table 7-1. Reported Units of Measure

Analyte/Parameter	Units
Regulated Emissions	Gm/mile
VOCs	Mg/mile
SVOCs	Mg/mile
Carbonyls	Mg/mile
$PM_{2.5}$	Mg/mile
Fuel Economy	Miles per gallon
Temperature	Fahrenheit

7.3 Data Management

After the data collection phase of this study is completed, two databases will be prepared: one containing raw data collected during the study, and one with quality assured and summarized data. The raw data will be provided in CSV format and the summarized data will be in Excel format. Both databases will contain appropriate data descriptors and dictionaries sufficient for independent review and analysis of the data.

Project measurement data are maintained in electronic formats (spreadsheet and text files) and identified with unique numbers. Measurement data from individual tests, as well as statistical summaries of the measurement data will be reviewed and reported informally on a continuing basis, and will be included in a formal project report following completion of the experimental portion of the WA.

EPA personnel will be responsible for archiving raw data, reducing analytical data and providing summaries with descriptive narratives. Records of all calibrations, system performance checks, blanks, surrogate recoveries, and any other method-required QC data will be provided, along with the raw sample data and notes of problems and corrective action taken. JACOBS personnel will reduce and compile any notes from laboratory logbooks made by the JACOBS sampling personnel.

8. Reporting Requirements

The EPA Senior Engineering Technician will conduct daily and weekly reviews of the data to ensure high quality data collection during the study. The EPA Senior Engineering Technician will supply the EPA WAM with daily summaries of raw test data and calculated data to communicate anassessment of the data quality during the study. The EPA Senior Engineering Technician will also advise the EPA WAM of any issues which has or may adversely impact data quality.

The EPA Senior Engineering Technician will prepare and submit a final report containing project objectives, methods and data summaries, along with discussion of results. The report will include a detailed evaluation of the quality assurance/quality control results of the study. The report will be submitted in Microsoft Word format.

Table 8-1 provides a list of deliverables and corresponding responsible personnel/ organizations.

Table 8-1. Deliverables and Responsible Parties

Deliverable	Responsible Personnel or Organization
Daily/Weekly data reviews	Richard Snow
Daily Summaries to WAM	Richard Snow
Raw Data – Regulated Emissions, Temperatures, Misc test cell data	Richard Snow
Raw Data – Carbonyls	Ingrid George
Raw Data – $PM_{2.5}$	James Faircloth
Raw Data- VOC	Ingrid George
Raw Data - Ethanol	Bill Preston
Raw Data-Particle Counts	Thomas Long
Raw Data-BC Concentrations	Thomas Long
Raw data database and validation	Richard Snow
Summarized data database	Richard Snow/Thomas Long
Final Report	Thomas Long/Richard Snow

The EPA Senior Engineering Technician will generate reports of measurement results for all samples analyzed in accordance with QAPP. These reports will be provided within three weeks of the month in which the sampling and analyses occur in accordance with the schedule within the work plan. The reports will provide results in

both paper hardcopy, and on computer media formatted for input to Microsoft Excel or ASCII format, as directed by EPA WAM.

9. References

1. Board on Energy and Environmental Systems, National Research Council of the National Academies, "Technologies and Approaches Reducing the Fuel Consumption of Medium- and Heavy- Duty Vehicles", 2010 (also [HYPERLINK "http://www.nap.edu/openbook.php?record_id=12845"])

2. "Standard Specification for Diesel Fuel Oil, Biodiesel Blend (B6 to B20)", ASTM D7467, 2010 (also [HYPERLINK "http://www.astm.org/Standards/D7467.htm"])

3. "Code of Federal Regulations Title 40 Protection of the Environment, Volume 19, Chapter I, Subchapter C, Part 86.1313"

4. "Code of Federal Regulations Title 40 Protection of the Environment, Chapter 1, Volume 34, Part 1065"

5. "Clean Diesel Trucks, Buses, and Fuel: Heavy-Duty Engine and Vehicle Standards and Highway Diesel Fuel Sulfur Control Requirements '2007 Heavy-Duty Highway Rule'", 2001 (also [HYPERLINK "http://www.epa.gov/otaq/highway-diesel/regs.htm"])

6. Nigel N. Clark, Mridul Gautam, "Heavy-Duty Vehicle Chassis Dynamometer Testing for Emissions Inventory, Air Quality Modeling, Source Apportionment and Air Toxics Emissions Inventory, Appendix C", Coordinating Research Council Project E-55/59 Phase 2 Final Report, 2005.

7. "Code of Federal Regulations Title 40 Protection of the Environment, Chapter 1, Volume 34, Part 1066"

8. "Code of Federal Regulations Title 40 Protection of the Environment, Chapter 1, Volume 34, Part 1065 Subpart G"

9. "Code of Federal Regulations Title 40 Protection of the Environment, , Chapter 1, Volume 34, Part 1065.145(c)"

10. “Road Load Measurement Using Onboard Anemometry and Coastdown Techniques”, SAE International Surface Vehicle Recommended Practice SAEJ2263, Revised Dec,2008.

11. “Chassis Dynamometer Simulation of Road Load Using Coastdown Techniques”, SAE International Surface Vehicle Recommended Practice

SAEJ2264, Issued Apr 1995.

12. “Code of Federal Regulations Title 40 Protection of the Environment, Volume 19, Chapter I, Subchapter C, Part 86.232”

13. “Code of Federal Regulations Title 40 Protection of the Environment, Volume 19, Chapter I, Subchapter C, Part 86.230-11(c)(2)”

14. “Standard Test Method for Determination of Individual Components in Spark Ignition Engine Fuels by 100 Metre Capillary High Resolution Gas Chromatography”, ASTM D6729, 2009 (also [HYPERLINK "http://www.astm.org/Standards/D6729.htm"])”

15. Standard Test Method for Density, Relative Density, or API Gravity of Crude Petroleum and Liquid Petroleum Products by Hydrometer Method”, ASTM D1298, 2012 (also [HYPERLINK "http://www.astm.org/Standards/D1298.htm"])

16. Standard Test Method for Distillation of Petroleum Products at Atmospheric Pressure”, ASTM D86, 2011 (also [HYPERLINK "http://www.astm.org/Standards/D86.htm"])

17. “Standard Test Method for Vapor Pressure of Petroleum Products (Mini Method)“, ASTM D5191, 2012 (also [HYPERLINK "http://www.astm.org/Standards/D5191.htm"])

18. “Standard Test Method for Sulfur in Petroleum Products by Wavelength Dispersive X-ray Fluorescence Spectrometry”, ASTM D2622, 2010 (also [HYPERLINK "http://www.astm.org/Standards/D2622.htm"])

19. “Standard Test Methods for Instrumental Determination of Carbon, Hydrogen, and Nitrogen in Petroleum Products and Lubricants”, ASTM D5291, 2010 (also [HYPERLINK "http://www.astm.org/Standards/D5291.htm"])

20. “Standard Test Method for Cloud Point of Petroleum Products”, ASTM D2500, 2011 (also [HYPERLINK "http://www.astm.org/Standards/D2500.htm"])

21. “Standard Test Method for Cetane Number of Diesel Fuel Oil”, ASTM D613, 2010 (also [HYPERLINK "http://www.astm.org/Standards/D613.htm"])

22. “Standard Test Method for Determination of Biodiesel (Fatty Acid Methyl Esters) Content in Diesel Fuel Oil Using Mid Infrared Spectroscopy (FTIR-ATR-PLS Method)”, ASTM D7371, 2012 (also [HYPERLINK "http://www.astm.org/Standards/D7371.htm"])

23. “Code of Federal Regulations Title 40 Protection of the Environment, Part 160 Good laboratory practice standards”

24. TH-0301.0 GENERAL - Hart Dry Well.doc

25. MS-0501.1 GENERAL - Balance.docx

Appendix **[PAGE]**

Catalyst Sulfur Removal Procedure

Appendix **[PAGE]**

Method of Procedure: Mass Measurement of Blank and Exposed Substrates

Appendix **[PAGE]**

Modification to CARB Procedure for the Analysis of Automotive Exhaust for Methanol and Ethanol

Appendix **[PAGE]**

Standard Operating Procedure for Determination of VOCs in Whole Air Samples Collected in Canisters Using the Agilent 6890/5973N GC-MSD

Appendix **[PAGE]**

California Air Resources Board
Procedure for the Analysis of
Automotive Exhaust for Methanol and
Ethanol

Appendix **[PAGE]**

Compendium Method TO-15

Appendix **[PAGE]**

JACOBS Refueling MOP

Appendix **[PAGE]**

Compendium Method TO-11A

Appendix **[PAGE]**

SAE J1151 Methane Measurement
Using Gas Chromatography

Appendix **[PAGE]**

JACOBS Protective Filter
Check/Replace MOP

Appendix **[PAGE]**

SOP Photoacoustic Extinctiometer (PAX)

Appendix **[PAGE]**

PM Analysis QAPP

Appendix **[PAGE]**

AE-51 MicroAethalometer

Appendix **[PAGE]**

Photoacoustic Extinctiometer (PAX)
Operator Manual

Appendix **[PAGE]**

EPC™ Environmental Particle Counter™ Monitor Operation and Service Manual

Appendix **[PAGE]**

Model 3090 Engine Exhaust Particle SizerTM Spectrometer Operation and Service Manual

Appendix **[PAGE]**

IMACC FTIR QA

Appendix **[PAGE]**

Cavity Attenuated Phase Shift NO_2 Monitor

ADDENDUM 2 Speciation of Exhaust Gases from Trucks

For this study in which ethylene oxide (EtO) will be reported, the sample lines will be coated with Silco. Samples will be collected into individually blank checks 6L Silco/Silonite lined sampling canisters. Samples will be analyzed by GC/MS operating in the Selective Ion Mode.

In addition to EPA Method TO-15, samples from the same passivated cans may optionally be analyzed using EPA Method 3C. The TO-15 target compound list will have a 10 ppb reporting limit or lower. EPA Method 3C (O_2, CO_2, CH_4, CO) will have a 0.10% reporting limit or lower.

For each day of testing, a summa can will be taken from the diluted exhaust of the test vehicle for at least one test phase and one composite of multiple test phases.

In addition, one sample will be taken from the dilution air prior to mixing with the raw exhaust and one sample will be taken from the engine intake air. At least one blank, will be taken each week.

One of the composite cans will be spiked with 10 ppb of EtO and analyzed.

Approximately 15 canisters collected from active combustion sources at a significant dilution with an expected reporting limit (RL) of 10ppb. After all samples have been analyzed at the first dilution (10 ppb RL), if samples do not have detectable concentrations of ethylene oxide, 1 sample per condition will be chosen and an attempt will be made to reanalyze these samples at a reduced dilution. The reduced dilution will result in a reduced RL. Samples will be introduced to the instrument at successively lower dilutions until the results have questionable validity from smearing/overloading the instrument with other inseparable species (like high CO/CO2, combustion products) or instrument operational viability becomes compromised.

Reactive compounds can damage the instrument and trapping system and this is usually observed by instrument noise increasing significantly or instrument response reduction. Instrument response reductions of greater than 30%, as quantified by internal standard abundances, indicate the system may be compromised. Attempts will not be made to reduce detection limits below 0.1ppb (due to risks involved in pushing the instrumentation past that level are significant).

The same canister will be analyzed for the TO-15 target compound list with a 10 ppb reporting limit and by EPA Method 3C (O2, CO2, Methane, CO) with a 0.10% reporting limit.
The total cost for this project is $15,000 which includes the analysis of

Up to 18 canisters will be analyzed at a 10 ppb RL, and up to 5 canisters at a 0.10 ppb RL.

For each Light-duty vehicle, the tests will include the Supplemental Federal Test Protocol including the US06. For each heavy-duty vehicle, the tests will include the Heavy-Duty Urban Dynamometer Driving Schedule (HD-UDDS) and include the option of sampling during a Carb Transient 3 driving schedule.

Message

From: Snow, Richard [Snow.Richard@epa.gov]
Sent: 7/29/2019 3:12:49 PM
To: Nessley, Libby [Nessley.Libby@epa.gov]
Subject: RE: Spiked can recovery calcs
Attachments: Copy of Spiking worksheet EO RSnow.xlsx

The mistaken identity has actually happened on several occasions!!!

There seems to be a discrepancy in Enthalpy's reported concentration (ug/m3) and the concentration calculated from their spreadsheet, i.e,
In their report, the spiked and unspiked can concs are given as 28.3 and 8.69 ug/m3, respectively. In their spreadsheet, the concentrations calculate out to be 30.48 and 9.34 ug/m3.

I think this difference arises because in their spreadsheet, they are using canister sample volumes corrected to 20 C, but using molar volumes corrected to 0 C to convert conc to mols. You can see what I'm referring to in the copy of their spreadsheet I'm attaching.

Could we get clarification on what temperature the sample volumes are corrected to? Other than that, we appear to be on the same page with their calcs.

From: Nessley, Libby
Sent: Monday, July 29, 2019 10:08 AM
To: Snow, Richard <Snow.Richard@epa.gov>
Subject: RE: Spiked can recovery calcs

From: Nessley, Libby
Sent: Monday, July 29, 2019 10:08 AM
To: Nessley, Libby <nessley.libby@epa.gov>
Subject: RE: Spiked can recovery calcs

Doh-sent it to Richard Shores ☹

From: Nessley, Libby
Sent: Monday, July 29, 2019 9:53 AM
To: Snow, Richard <Snow.Richard@epa.gov>
Subject: RE: Spiked can recovery calcs

I think I sent you Enthalpy's calcs this morning but they are attached here as well.

From: Snow, Richard
Sent: Monday, July 29, 2019 9:51 AM
To: Nessley, Libby <Nessley.Libby@epa.gov>
Subject: Spiked can recovery calcs

Libby,

Here's my latest calcs for the EtO spiked can recoveries. Let me know what you think.

If you feel comfortable sharing Enthalpy's calcs, I'd like to take a look.

-Richard

Richard Snow | Engineering Technician
U.S. Environmental Protection Agency/ORD/NRMRL/AEMD/DSBB
109 T.W. Alexander Drive, Mail Drop E343-02
RTP, NC 27711

Office 919.541.3135 | Cell 919.621.5852
Snow.Richard@EPA.gov

Message

From: Snow, Richard [Snow.Richard@epa.gov]
Sent: 7/29/2019 1:50:43 PM
To: Nessley, Libby [Nessley.Libby@epa.gov]
Subject: Spiked can recovery calcs
Attachments: SpikedCanRecoveryCalcs.xlsx

Libby,

Here's my latest calcs for the EtO spiked can recoveries. Let me know what you think.
If you feel comfortable sharing Enthalpy's calcs, I'd like to take a look.

-Richard

Richard Snow | Engineering Technician
U.S. Environmental Protection Agency/ORD/NRMRL/AEMD/DSBB
109 T.W. Alexander Drive, Mail Drop E343-02
RTP, NC 27711

Office 919.541.3135 | Cell 919.621.5852
Snow.Richard@EPA.gov

NRMRL QUALITY ASSURANCE PROJECT PLAN

Office of Research and Development
National Risk Management Research Laboratory
Air and Energy Management Division

Field Evaluation of Ambient Ethylene Oxide (EtO) Measurements using EPA Method TO-15A

Method Development/Measurements
QA Category A

Revision Number: 0
Date: 06/30/2019

Prepared by:
Ingrid George, US EPA

Air and Energy EM 2.8 (RA-4)

QA Track ID

NRMRL
Quality Assurance Project Plan (QAPP)

Title:	**Quality Assurance Project Plan for Field Evaluation of Ambient Ethylene Oxide (EtO) Measurements using EPA Method TO-15A**
Division/Staff:	AEMD\DSBB
QA Category:	A
ORD National Program:	A-E
RAP Project ID\Task ID:	RA-4
QAPP Tracking Number:	
Effective Date:	

QAPP Author(s)	
Name: * Ingrid George, AEMD Principal Investigator	Name:
Name:	Name:
Project Participant Approval	
Name: Xi Chen	Signature/Date:
Name: Greg Noah	Signature/Date:
Name: Lewis Weinstock	Signature/Date:
NRMRL QA Approval	
Name: Libby Nessley, AEMD QA Manager	Signature/Date:
Name:	Signature/Date:
NRMRL Management Approval	
Name: Richard Shores, DSBB Branch Chief	Signature/Date:
Name: Lara Phelps, AEMD Division Director	Signature/Date:

* Primary Author

Change No.	Description	Date	Revised	Changes
0	Initial QAPP submission			
1				
2				
3				

Table of Contents

[TOC \o "1-3" \h \z \u]

List of Figures

Figure 1. Project Organizational Chart
Figure 2. Map of sampling sites
Figure 3A. Picture of Canister connected to passive sampler (capped)
Figure 3B. Picture of passive sampler with components labelled
Figure 4. Sampling Chain of Custody form example

List of Tables

Table 1. Distribution list
Table 2. Lab Evaluation QC Parameters
Table 3. Field evaluation sampling QC Parameters
Table 4. Field evaluation lab analysis QC Parameters

Disclaimer

This document is intended for internal Agency use only. Mention of trade names or commercial products does not constitute endorsement or recommendation for use.

Distribution List

Table 1. Distribution list

Name	Organization Affiliation	Role	Contact Information
Ingrid George	EPA/NRMRL/ AEMD	Technical Lead	Phone: (919) 541-9780 Email: [HYPERLINK "mailto:george.ingrid@epa.gov"]
Xi Chen	EPA/OAR/OAQPS	Technical Lead	Phone: (919) 541-4957 Email: [HYPERLINK "mailto:chen.xi@epa.gov"]

Michael Hays	EPA/NRMRL/ AEMD	Jacobs WACOR	Phone: (919) 541-3984 Email: [HYPERLINK "mailto:hays.michael@epa.gov"]
Greg Noah	EPA/OAR/OAQPS	Field Coordinator	Phone: (919) 541-2771 Email: [HYPERLINK "mailto:noah.greg@epa.gov"]
Lewis Weinstock	EPA/OAR/OAQPS	Branch Chief	Phone: (919) 541-3661 Email: [HYPERLINK "mailto:weinstock.lewis@epa.gov"]
William Preston	Jacobs Technology/CSS	Contract Lead	Phone: (919) 541-9780 Email: [HYPERLINK "mailto:george.ingrid@epa.gov"]
Libby Nessley	EPA/NRMRL/ AEMD	QA Manager	Phone: (919) 541-4381 Email: [HYPERLINK "mailto:nessley.libby@epa.gov"]
Richard Shores	EPA/NRMRL/ APPCD	Branch Chief	Phone: (919)-541-4983 Email: [HYPERLINK "mailto:shores.richard@epa.gov"]

List of Abbreviations

ADQ	Audit of Data Quality
A-E	Air and Energy National Program
AEMD	Air and Energy Management Division
ANP	Advanced notification products
AR	Analytical Reagent
ASTM	American Society for Testing and Materials
CoC	Chain of Custody
EPA	U.S. Environmental Protection Agency
EtO	Ethylene oxide
HASP	Health and Safety Plan
LC	Liquid Chromatography
LCMRL	Lowest Concentration Minimum Reporting Limit
LLOQ	Lower Limit of Quantitation
MDL	Method Detection Limit
MI	Matrix Interfaces
MSDS	Materials Safety Data Sheet
NPD	National Program Director
NRMRL	National Risk Management Research Laboratory
ORD	Office of Research and Development
PI	Principal Investigator
POE	Point of Entry
POU	Point of Use
PPM	Policies and Procedures Manual
QA	Quality Assurance
QAM	Quality Assurance Manager
QAPP	Quality Assurance Project Plan
QARF	Quality Assurance Review Form
QC	Quality Control
QMP	Quality Management Plan
RAP	Research Action Plan
SOP	Standard Operating Procedure
TSA	Technical Systems Audit

1. Project Description and Objectives

1.1. Background

Ethylene oxide is a hazardous air pollutant (HAP) that is used widely in the chemical production industry to produce a range of consumer products and chemicals, such as ethylene glycol, solvents, plastics, and detergents. EtO gas is also used by hospitals and by the medical industry in sterilization facilities to sterilize medical equipment. Ambient ethylene oxide (EtO) levels have become an increasingly important environmental health concern in recent years. The major driver of the increased concern for EtO is that EPA has updated the Integrated Risk Information System (IRIS) assessment in December 2016 for the cancer risk from ethylene oxide inhalation that has

increased the lifetime cancer unit risk estimate by a factor of 60 from the previous assessment to the current value of 9.1 x 10^{-3} per ppbv. This unit risk assessment corresponds to a 100-in-a-million cancer risk concentration of 11 pptv EtO. In the latest National Air Toxics Assessment (NATA) in 2018, EPA incorporated the updated IRIS values for EtO to estimate the long-term health risk associated with air toxic exposure using the most recent emissions data from the 2014 National Emissions Inventory. The 2014 NATA assessment estimated that ambient EtO levels significantly increased the cancer risk in several counties. These NATA findings highlight the importance of and need for high quality ambient air toxics monitoring and emissions measurements for ethylene oxide, particularly for trace-level concentrations (<100 ppt) of this HAP.

Currently, there is no standard EPA measurement reference method for ethylene oxide in air. EPA Method TO-15 is currently being adapted to measure EtO in various EPA ambient air monitoring and emissions measurement efforts. Other advanced online measurement approaches are also under evaluation by ORD researchers for EtO emissions measurements. EPA Method TO-15 is a whole air canister sampling based ambient air toxics measurement method for volatile organic compounds (VOCs) that uses gas-chromatography/mass spectrometry (GC/MS) instrumentation to quantify target VOCs in whole air canister samples. Furthermore, EPA has recently updated TO-15 to TO-15A (in review) that has stricter quality metrics.

EPA's National Ambient Air Toxics Transfer Stations (NATTS) air monitoring program will soon require participating analytical labs in the NATTS air monitoring network to report ambient EtO concentrations following TO-15A sampling and analytical methodology. However, our current understanding of the performance metrics and data quality of TO-15A measurement of ethylene oxide is limited. Preliminary ethylene oxide results of recent NATTS canister samples from several sites have indicated that there may be several potential analytical issues associated with EtO measurement by TO-15A that require further investigation. These issues include limitations on sensitivity so that cancer risk concentrations are below method detection limits and not quantifiable. This issue could depend on the instrumentation used for analysis. Ethylene oxide is highly reactive, so that recovery and stability of air samples may be an issue leading to negative measurement bias. Another source of measurement bias could be from the presence of coeluting ambient pollutants, such as trans-2-butene, that could interfere with the GC/MS analysis of EtO. This project will conduct lab and field evaluation to investigate the viability and limitations of adapting TO-15A for ambient EtO monitoring using two sets of analytical instrumentation.

1.2. Project Objectives

The main objective of this project is to assess the performance of EPA Method TO-15A for ambient ethylene oxide measurement. This project has two major components: 1) a laboratory evaluation following TO-15A guidance and 2) a field evaluation by conducting an ambient monitoring study. Specific objectives involved with this project include the following:

- establish analytical methods for ethylene oxide as part of standard TO-15A analysis on two separate GC/MS systems with two different GC/MS systems configured for TO-15 analysis
- characterize method sensitivity, recovery, and effects of coeluting VOCs by conducting laboratory evaluation of ethylene oxide canister analysis by TO-15A methods to
- conduct ambient TO-15A measurements at two locations to collect ambient canister samples

and to quantify ambient EtO using established analytical methods

The laboratory evaluation will closely follow guidance found in TO-15A on characterization of analytical instrumentation, canisters, field sampling apparatus and associated performance specifications. For the field monitoring part of the study, canisters samples will be collected at two ambient monitoring sites in Research Triangle Park, NC: 1) AIRS site will reflect a background conditions not impacted by nearby emissions, 2) Triple Oaks near road site to assess the impact of nearby mobile source emissions on ambient EtO measurements.

2. Project Organization and Responsibilities

2.1. Project Personnel

(Needs review) The personnel involved in carrying out the project objectives and their roles and responsibilities are described below and the organizational structure is shown in Figure 1.

Project Manager: Ingrid George will be responsible for execution for all components of this QAPP. She will coordinate between all project team members, including coordination between sampling and analytical lab activities. She will be responsible for data reporting.

OAQPS Technical Lead: Xi Chen will serve as technical lead and provide technical direction on the project in relation to OAQPS research needs. She will also serve as WACOR to direct sampling related contractor activities.

Field Coordinator: Greg Noah will be responsible for technical guidance on field sampling activities.

Jacobs WACOR: Michael Hays will manage Jacobs work assignment and direct Jacobs contractors to conduct lab analytical project activities.

Lab Contractor Lead: Bill Preston will serve as Jacobs (CSS) Work Assignment Lead and will be responsible for executing lab analytical activities related to this project.

Field Technician: Kyle Digby will be responsible for conducting field sampling activities as outlined in this QAPP.

Lab Technician: Alexia Scott will provide contractor lab support to carry out lab analytical work related to VOC analysis.

ORD QA Manager: Libby Nessley will be responsible for reviewing this QAPP and will conduct QA review of products generated from this work. She will conduct internal lab audits as required.

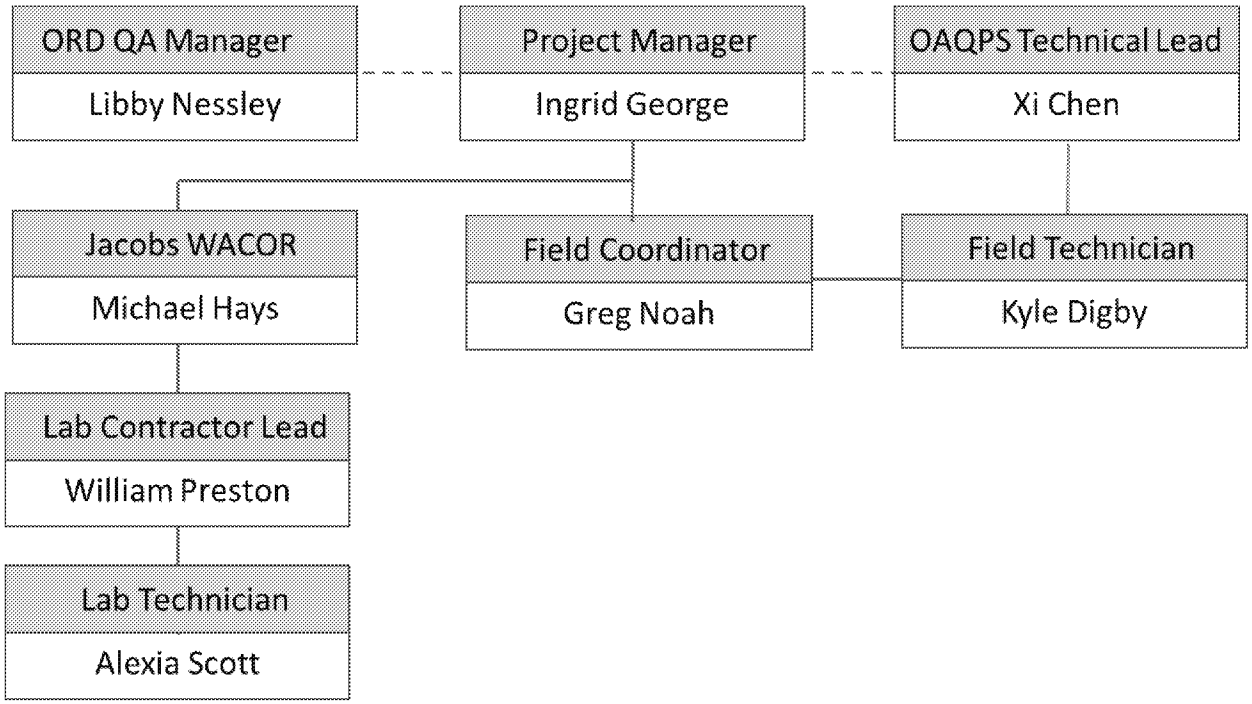

Figure 1. Project Organizational Chart (NEEDS REVIEW)

2.2. Project Schedule

The estimated project schedule is outlined below. The project schedule will be impacted by building upgrade activities during the summer that will shut down the NRMRL VOC lab for approximately 4 weeks (currently scheduled for late Aug. to late Sept. 2019).

- Early July 2019: Submit QAPP
- Late July 2019: QAPP approved
- July– Aug. 2019: Conduct lab evaluation
- Early Aug. - Late Aug2019.: Begin field sampling.
- Late Sept. – Nov. 2019: Continue field sampling. Analyze data
- Nov- Dec. 2019: Finalize and report results.

3.0. Scientific Approach

This study will assess the performance of EPA Method TO-15A for the quantification of ethylene oxide for ambient monitoring and will consist of two major project components: a lab evaluation and a field evaluation. In the lab evaluation component, previously established TO-15 analytical methodologies currently in use by the NRMRL VOC lab will serve as a starting point to develop and validate an analytical method incorporating the addition of EtO to the VOC target list on two separate GC/MS systems. More information on the analytical instrumentation is provided below. After the analytical method for EtO has been developed and found to meet TO-15A quality criteria outlined below, the field evaluation component will commence. For the field evaluation, an ambient field sampling campaign will be conducted at two EPA monitoring sites to collect canister samples. These samples will be analyzed to quantify for EtO and will include field and lab quality control samples to evaluate the overall method performance for ambient monitoring.

3.1. Analytical Instrumentation

Two sets of analytical instrumentation capable of TO-15 analysis will be utilized in both the lab and field components of this project to quantify EtO in lab generated and field collected canister samples. The two analytical systems are located in the NRMRL VOC Lab in E-288 and are currently used by EPA NRMRL staff to perform routine TO-15 analysis of canister samples for suite of target VOCs that include air toxics and ozone precursors (i.e. Photochemical Assessment Monitoring Stations or PAMS compounds). Both systems have similar components to accomplish this analysis including:

- an autosampler that draws a known volume of sample from the canister
- a preconcentration system that concentrates VOCs onto a cooled sorbent trap and removes water vapor in a separate empty trap; then after sampling is complete it heats trap that thermally desorbs target analytes from trap and they are passed to the GC column
- GC/MS system that separates and quantifies target VOCs based on their retention times, mass fragmentation pattern, and mass ion signals

The first GC/MS system used in this study is an Entech 7150 Preconcentrator, Entech 7500A canister autosampler with Agilent 6890/5973N GC/MSD. Procedures for operation of this instrument are outlined in two Standard Operating Procedures ECAB-143.0 "Standard Operating Procedure for Preconcentration of Volatile Organic Compounds in Whole Air Samples Collected in Canisters Using the Entech 7500A Robotic Autosampler/Entech 7150 Preconcentrator and ECAB-144.0 "Standard Operating Procedure for Determination of Volatile Organic Compounds in Whole Air Samples Collected in Canisters Using the Agilent 6890/5973N GC-MSD System". The GC column used in this GC/MS system is a Restek Rtx-1 60 m length, 0.32 mm OD x thickness column. The MS is operated in Selected Ion Monitoring (SIM) mode to perform TO-15 analysis.

The second analytical system is a Markes CIA Advantage Canister Autosampler, Markes Kori-xr for water management, Markes Unity-xr thermal desorption unit, Agilent 7890B GC, and Markes BenchTOF time-of-flight (TOF) mass spectrometer. The GC is configured with an Agilent Deans Switch, where the primary column connected to the Deans switch "inlet" is a Restek Rxi-624Sil 60 m, 0.32 mm ID 1.8 um. The deans switch allows for heart cutting of C2 compounds onto a second column connected to an FID for improved separation, where the second column is a Thermo TG-

BOND Q+ 30 m 0.32 mm ID 10 um. When not in heart-cutting mode, flow from the primary column is directed to a restrictor (2.5 m length 0.15 mm ID) that is connected to the BenchTOF. The BenchTOF MS is operated in SCAN mode during sample analysis.

3.2. TO-15A Lab Evaluation

Ethylene oxide is currently not included as part NRMRL VOC laboratory's standard TO-15 analysis target list. Therefore, this project will require a lab evaluation to determine whether ethylene oxide can be added to the current analytical methods and adhere to the newer TO-15A quality criteria. This validation process involves first that the analytical instrumentation be calibrated and undergo validation to ensure no positive or negative biases are present as outlined in TO-15A. MDLs will also be determined following EPA's Revised MDL Rule. The canisters used in this study will be evaluated for ethylene oxide in the second part of this lab evaluation process to characterize blank levels and recovery to better understand sampling biases.

3.2.1. Instrument Calibration and Validation

Both instruments will be calibrated for ethylene oxide included in a mix of TO-15 and PAMS compounds following guidelines in TO-15A. Calibration standards used to calibrate the GC/MS systems will be prepared by diluting from VOC calibration standards in high-pressure cylinders that are certified with NIST-traceable Certified Reference Material. An Entech 4600A Dynamic Dilutor will be used to prepare working calibration standards at 0.2 and 2 ppbv in 6 L Silonite coated cans (SOP ECAB 134.0). Initial calibration measurements will be used to select the most appropriate mass ion fragment (m/z 44 or m/z 29 for EtO) and evaluate the effect of coeluting compounds if present. These measurements will also be used to assess breakthrough volumes by observing whether relative response factors decrease with increasing sample volumes.

The calibration range will span from 0 to 4 ppb and will include at least 5 calibration levels be sampling different volumes from the calibration cans. A linear or quadratic curve fit may be used to achieve the quality control criteria: 1) the calibration fit must have an $R^2 \geq 0.995$, 2) each calibration level must be within ±30% of expected concentration. After initial calibration is completed a secondary source calibration verification (SSCV) will be performed to verify the initial calibration for ethylene oxide by analyzing a calibration standard from a different source. The measured concentration from the SSCV should be within ±30% of expected concentration using the initial calibration.

EPA revised the MDL procedure 40 CFR Part 136 Appendix B (Revision 2) in 2017 (ref), and this revised MDL method has been incorporated into TO-15A guidance. This procedure will be followed to determine EtO and other target MDLs for both GC/MS instruments. This method involves preparing and analyzing a minimum of 7 low level calibration spike standard cans and 7 lab blank cans filled with humidified zero air over at least 3 days. If the analyte was not detected in the blank cans, the MDL_{sp} is calculated from the spike cans using the standard deviation of the spiked sample concentrations multiplied by appropriate Student's t-Test value (99% confidence level). If the analyte was detected in all blank samples, the MDL_{bl} is calculated as the average value multiplied by standard deviation and Student's t Test value. If the VOC was measured in some of the blank samples, the $MDL_{bl\ is\ set}$ to the highest measured value. The overall MDL is determined by choosing the highest value after comparing MDL_{sp} and MDL_{bl} values.

3.2.2. Canister Validation

Prior to field sample collection, all canisters that will be used for this project as field samples or quality control samples will undergo a three-part canister validation procedure following TO-15A guidance: 1) leak test, 2) zero air challenge, and 3) known standard challenge. This procedure will determine whether the canisters are usable for TO-15A sample collection and analysis and will not contribute positive or negative bias. Canisters that do not meet the quality criteria for all three parts of the validation procedure will not be used for field sample collection in this project.

First, the canisters will undergo a canister leak check to ensure the canisters are leak-free. Canisters are evacuated to a final vacuum pressure of 10 mTorr using the Entech 3100 Canister Cleaner in E-288 and are loosely capped. The canister pressures are measured and recorded immediately after evacuation and then after at least 3 days using a calibrated pressure gauge. No measurable change in canister pressure within 0.1 psia over at least 3 days should be observed to pass the leak check. If a leak is observed, the canister may be repaired and a leak check may be reinitiated.

After passing the leak check, canisters will then be subjected to the zero-air challenge to validate that they are not contaminated or contributing a positive bias to the VOC analysis. Canisters are filled with humidified (~40-50% RH) hydrocarbon-free zero air produced from a zero-air generator or zero air gas cylinder to a pressure of approximately 20 psia using the Entech 4600A Dynamic Dilutor in E-288. Filled canisters will equilibrate at least 24 hrs, then will be analyzed by GC/MS. Target compounds should be <15 pptv or <MDL concentration as determined in Section 3.2.1, whichever value is highest. At least one can will be reanalyzed after 30 days to determine whether a positive bias is present within the maximum sample holding time for this study. After this time period, target concentrations should be ±30% of initially measured values.

Canisters that have passed both leak check and zero-air challenge are then evaluated for both positive and negative bias by undergoing the known-standard challenge. Canisters are filled to ~20 psia with a low-level calibration standard (~0.5 ppbv) containing target compounds, minimally ethylene oxide, in zero air using the Entech 4600A Dynamic Dilutor and humidified to ~40-50% RH. Samples are then analyzed by GC/MS after at least 24 hrs equilibration time. Target concentrations for these samples must be ±10% of theoretical spiked concentration, particularly for ethylene oxide. At least one canister will be reanalyzed after approximately 30 days from canister fill date to evaluate whether bias arises within the maximum canister holding time. Target concentrations should be ±30% of initial measured value.

3.2.3. Passive Sampler Validation

The passive sampler devices used for this project must be characterized to ensure time-integrated sampling is conducted with constant flow rates and that no sampling biases are introduced by the device. First the sampling flow rate will be verified by conducting sampling in the lab and monitoring the sampling flow rate using a calibrated flow meter and canister pressure over regular intervals during the 24 hr sampling period. The sample flow rate may need to be adjusted if it is not found to be set to the required flow rate for 24 hr sampling. Leak checks will also be performed as specified in the sampling device manual to ensure samplers are leak free.

Samplers will also undergo both a zero air and known standard challenge similar to the canister

validation procedures. To test the samplers, the sampler inlets will be connected to the outgoing flow of the Entech 4600A Dynamic Dilutor or similar calibration dilution system that will generate humidified zero air or low-level calibration gas. 24-hr samples will be collected through the sampler and the canister will be analyzed. A reference canister will be collected from the 4600A for comparison. For the zero air challenge, target compounds should be <5 pptv above reference sample or <MDL concentration if the reference concentration is <MDL. For the known standard challenge, target concentrations for these samples must be ±15% of the concentration in the reference sample to meet TO-15A guidelines. Samplers do not meet these quality criteria, the samplers may need to be cleaned and recertified.

3.3. Field Evaluation

In the field evaluation component of this study, ambient canister samples will be collected at two field sites over Summer and Fall 2019 in Research Triangle Park, NC and analyzed by TO-15A. The major objective of this component is to evaluate performance of the TO-15A sampling and analytical methodology in its ability to accurately quantify ethylene oxide and to identify and assess the effect of sampling/analytical interferences on this measurement. Field measurement methods will closely follow TO-15A guidelines. An improved understanding of local ambient EtO concentrations at a background and a near-road site and the effect of mobile source emissions on ambient EtO concentrations at the latter site is expected to be gained from this project but is not the main focus. As part of this project, EPA may also opportunistically analyze NATTS canister samples that have been previously analyzed by a contract lab as part of NATTS monitoring activities to gain more information on analytical interferences to ethylene oxide TO-15A measurement. Novel online EtO measurement approaches may also be evaluated at one of the two field sites and compared with TO-15A measurements as part of this work as these technologies become available.

3.3.1. Sampling Sites

Field sampling will be conducted at two sampling locations (see Figure 2): 1) AIRS Site (35.889501, -78.874645), and 2) Triple Oaks Site (35.865162, -78.819662). These sites were chosen as they are the locations of two well established and secure air monitoring sites used routinely by the EPA and near the EPA campus in Research Triangle Park, NC representing clean background and near road ambient conditions. More information on these monitoring sites can be found in the following QAPPs (AIRS QAPP ref, Near Road QAPP ref). By sampling at these two locations and comparing EtO measurements, we may gain information on the impact of mobile sources on ambient EtO concentrations, which is of significant interest to the EPA. 24-hr canister sampling will be conducted at both locations simultaneously in an approximate 1 in 3 day schedule. At the AIRS Site, canister samples will be set up on a raised platform x m above ground level (picture?) and hung from hooks connected to a rail and secured to the rail, while at the Triple Oaks Site, canisters will be hung x m above ground level (from a rail on top of the EPA trailer (picture).

Figure 2. Map of sampling sites

(Pictures of both sites?)

3.3.2. Sampling Schedule and Methods

Time-integrated 24-hr canister sampling will be conducted at both sites twice a week for an approximate cumulative 3-month duration over the Summer and Fall of 2019. The field campaign will be interrupted by the building maintenance activities that will close down the NRMRL VOC Lab in September and will restart in October 2019. The start date of the field evaluation will depend on the completion of the lab evaluation, which is expected to be completed in early August 2019. The sampling event will begin approximately at 10:00 AM Local Time and end at 10:00 AM the next day for a 24 hr duration. However, considering the potential logistical delays to collect a sample, a 24±1 hr duration must be required.

Sampling will be generally conducted following TO-15A guidelines. Filtered whole air ambient samples will be collected over a 24 hr period in 6 L Silonite-coated Entech canisters (PN 29-10622) and Entech passive canister samplers (PN 39-CS1200ES4). Figure xa shows the 6 L canister connected to the passive sampler and Figure xb shows the passive sampler with components labeled. The passive sampler (Figure x) controls canister sampling rate over 24 hrs using a critical orifice and diaphragm for minor flow adjustments. Canister pressures can be monitored using the connected vacuum gauge. The sampler inlet is connected to a particulate filter to remove particulate matter that may contaminate the canister. All components of the sample flow path are Silonite coated to minimize sampling artifacts. Co-located sampling will be conducted during one sampling event and location biweekly, and the location will be rotated each week between the two sites. For

the same event, one field blank and one field control will be deployed with the canisters biweekly. The field blank will remain evacuated and the field control will be filled with ~0.25 ppbv calibration standard to an approximate canister pressure achieved after sampling (~12 psia).

To prepare canisters for sampling, canisters are cleaned by EPA ORD following the SOP ECAP 133.0 Standard Operating Procedure for Cleaning Air Sampling Canisters with the Entech 3100 Canister Cleaner. One batch blank pressurized with humidified zero air from each canister cleaning batch will be analyzed by GC/MS to verify that the set of canisters were properly cleaned. Target compounds should be <15 pptv or <MDL concentration as determined in Section 3.2.1, whichever value is highest. If the batch blank passes this criteria, the cans can be evacuated and used for sampling. Otherwise, the cans must be recleaned and a batch blank will be tested again. One evacuated canister from the batch will be kept in the lab to serve as a lab blank and will be later filled and analyzed with the other canister samples from that batch. Evacuated canisters are given a tag labelled with Canister ID, cleaning date, final evacuation pressure that is placed in a plastic cover. Canister pressures are measured and recorded on the sampling Chain of Custody before being deployed in the field.

(Need sampling MOP?) After canisters and samplers are deployed to the field site and before sampling, initial canister pressures are measured with the sampler vacuum gauge while sampler is connected to the canister and capped. The initial canister pressure is recorded on the COC. The sampler is also leak checked before sampling by monitoring the pressure while the sampler is still capped after briefly opening then closing the canister. No apparent pressure change should be observed after 2 minutes. If a leak is observed, fittings should be tightened and the leak check is repeated until system is leak-free. The sampler flow rate is verified in the field before sampling by repeating these steps with the cap taken off and monitoring the pressure change over a specified period as detailed in the sampler manual. Sampling is started by removing sampler cap and opening canister valve.

Sampling start time will be recorded on the COC. Sample IDs will be written on the canister tag and COC and coded as follows: AA-MMDDYY-HHmm-x, where AA is the site code (AR for AIRS Site, NR for Triple Oaks Site), MMDDYY is start date, HHmm is sampling start time (military format, local time), and x is sample type (S is sample, D is duplicate, FB is field blank, FC is field control). After 24 hrs, the canister pressure is recorded, the canister valve is closed to stop sampling, and sampler is removed. Sampling end time is also recorded on the COC. When not sampling, the samplers are capped and stored in an air-conditioned trailer or brought back to the lab.

3.3.3. Sample Handling and Custody

All sampling information for each canister will be recorded in a sampling chain of custody form (see Figure 4 for example COC form). Sampling COC forms will remain with the canister sample during all sampling activities. Pre- and post-sampling canister pressures canister and sampling IDs and sampling start and stop times are recorded in the COC forms. Upon sampling completion, canister samples are returned to the NRMRL VOC lab on the same day as the sampling end date. Sample IDs written on the COC and canister tag will be compared to sampling information on the COC make sure they are correct. Canister pressure will be recorded on the COC and in the lab notebook and compared with the final canister pressure measured in the field. Pressure differences must be within 0.5 psi. Otherwise, the canister sample will be QA flagged as having potentially

leaked. Biases in the pressure gauges and differences in ambient barometric pressure will be considered in this comparison.

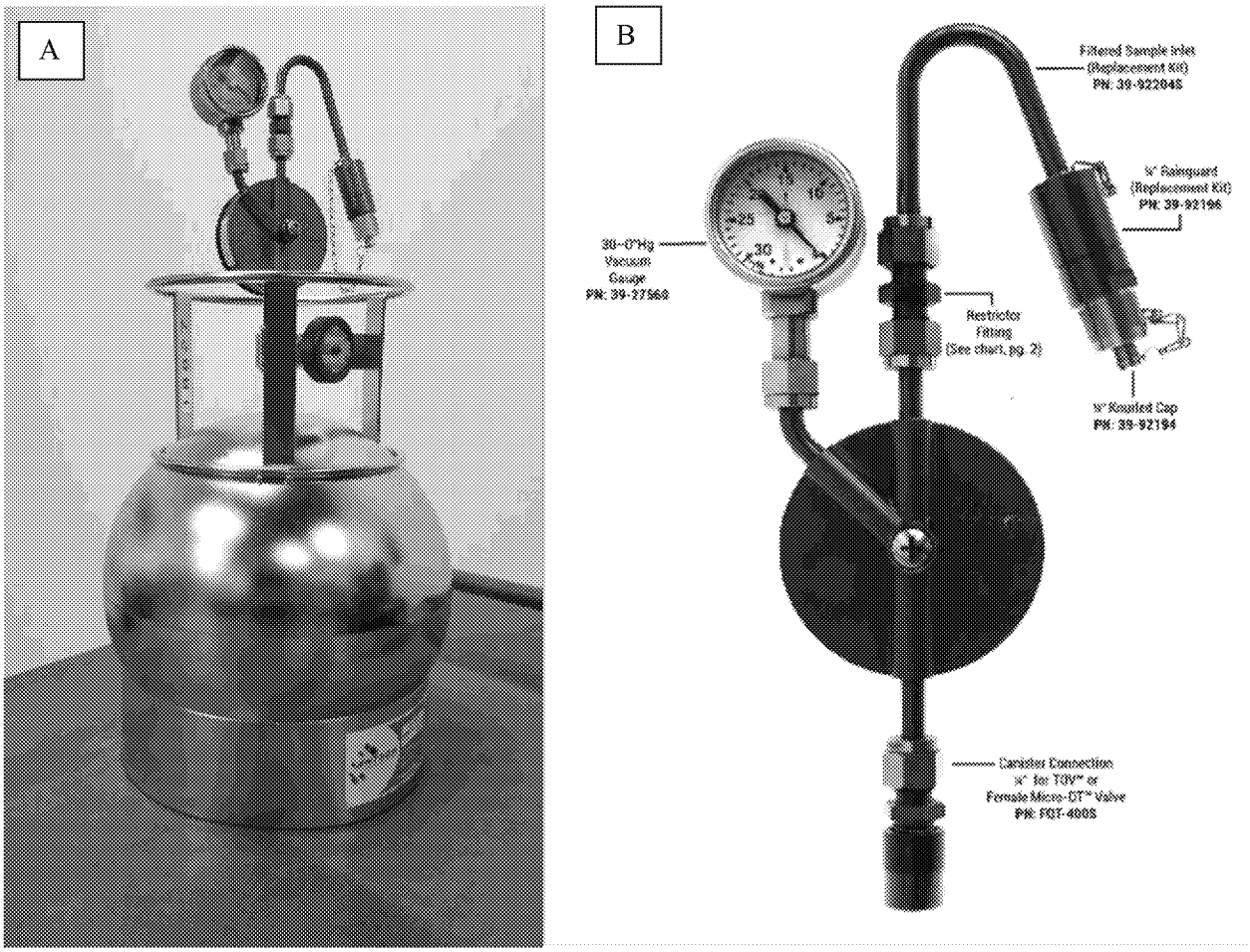

Figure 3A. Picture of Canister connected to passive sampler (capped); Figure 3B. Picture of passive sampler with components labelled

Canister samples will be diluted with humidified zero air using the Entech 4600 to ~20 psia. Hold time between sampling and GC/MS analysis will be a maximum of 30 days.

USEPA Passive Canister Sampling Chain of Custody Record

PROJECT: _____

PRE-SAMPLING

CAN ID: _____ CLEANING DATE: _____ LAB PRESSURE: _____

RELINQUISHED BY: _____ DATE/TIME: _____

RECEIVED BY: _____ DATE/TIME: _____

SAMPLING

SAMPLER ID: _____ SITE: _____ LEAK CHECK PASS? _____

START DATE/TIME: _____ INITIAL PRESSURE: _____

END DATE/TIME: _____ FINAL PRESSURE: _____

SAMPLE NAME: _____

NOTES:

_____
_____
_____
_____
_____

POST-SAMPLING

RELINQUISHED BY: _____ DATE/TIME: _____

RECEIVED BY: _____ DATE/TIME: _____

ANALYST: _____ LAB PRESSURE: _____ ANAYLSIS DATE: _____

Figure 4. Sampling Chain of Custody form example

3.3.5. Analytical Methods

Canister samples will be analyzed for ethylene oxide and other target VOC compounds following

EPA Method TO-15A by the NRMRL VOC Lab on two GC/MS systems. In this project the particular focus will be on whether TO-15A performance criteria can be met for EtO. Furthermore, EtO measurements in the GC/MS chromatograms will be carefully reviewed to determine whether coeluting compounds are present and are contributing bias to the analysis. The analytical instrumentation used for TO-15A analysis of EtO was previously described in Section 3.1. Aliquots (100 to 1000 mL) of sample are collected from the canister using a canister autosampler and VOCs are trapped by the preconcentration system (Entech 7150 and Markes Unity-xr). The VOCs are thermally desorbed from the preconcentration trap in a small volume of carrier gas and injected onto the GC column. Target analytes are then separated and quantified by a GC/MS system in SIM mode for the Entech GC/MS system and in SCAN mode using the Markes GC/MS system.

The peak retention time and mass spectral pattern in comparison to calibration standards are used to confirm target compound identification. The peak area of the quantitation ion for ethylene oxide, either 29 or 44 m/z depending which is found optimal from the lab evaluation, will be used to calculate target concentrations based on the initial calibration. 1,4-dichlorobenzene and chlorobenzene-d5 will be used as internal standards. The same quantities of internal standards will be introduced during each analytical run to assess the stability of MS response over time. Internal standard RTs must be within 5 s of average RT from initial calibration and area response must be within 40% of average initial calibration area response. Runs that do not meet these criteria will be flagged, and the initial calibration may be repeated as needed.

The MS tuning/optimization parameters are verified using 4-Bromofluorobenzene (BFB) tune check for the Entech GC/MS system and using the Air/Water Ratio check for the Markes GC/MS system. BFB Tune Check should meet TO-15 Criteria. Note that the BFB Tune Check is not required in TO-15A but is still advised to verify MS operational stability. The Air/Water Ratio must be <1 to pass. These checks are performed every 24 hrs of analysis before samples are analyzed. If they do not pass, the MS should tuned or optimized. MS maintenance actions may be required if these checks fail after tuning/optimization. Other quality control checks that are analyzed during each analytical sequence includes an instrument blank, lab blank, a replicate sample analysis and a continuing calibration verification. The CCV must be within ±30% of expected concentrations. Other quality criteria for these checks are outlined in Section 4.

4. Quality Metrics

The quality criteria for this project will closely follow TO-15A guidelines for sampling and lab analysis. All pressure gauges and mass flow controllers used will be calibrated annually by EPA's metrology lab. All calibration standards will be NIST traceable and used within expiration date. As noted above, this project aims to evaluate whether TO-15A quality control criteria can be met for EtO measurements from both QC samples generated in the lab and for ambient field samples. Note that EPA Method TO-15A has not yet been finalized and published, and so QC criteria may change in the final publication. This project reflects the performance metrics of the most recent draft available internally. Table 2 summarizes the QC metrics for the lab evaluation.

Table 2. Lab evaluation QC parameters

Measurement Parameter	QA/QC Check Procedure	Frequency	Acceptance Criteria	Corrective Action
Initial calibration (ICAL)	Minimum 5-level calibration analysis	Before sample analysis, after failed CCV criteria or instrument changes.	Calibration fit R2>0.995; Each calibration level within ±30%	Reproduce calibration canisters; instrument maintenance
Secondary Source Calibration Verification (SSCV)	Analysis of secondary source standard	Immediately after ICAL	Values within ±30% of expected conc.	Recertify secondary source or use a different source
Canister leak check	Measure canister pressure change 3 days after evacuation	Before canisters are used for sampling initially	Final canister pressure ±0.1 psia of initial pressure	Canister must be repaired or replaced
Canister zero air challenge	Analyze humidified zero air filled canister after at least 1 day	Before canisters are used for sampling initially	Target concentrations should be the higher of <15 pptv or <MDL	Reclean canisters and repeat. Remove if criteria not met after repeated testing
Canister known standard challenge	Analyze low-level calibration canister after at least 1 day	Before canisters are used for sampling initially	Target concentrations for these samples must be ±10% of theoretical spiked concentration	Reclean canisters and repeat. Remove if criteria not met after repeated testing
Sampler zero air challenge	Collect humidified zero air through sampler and canister and analyze canister	Before samplers are used for sampling initially	Target compounds <5 pptv above reference sample or <MDL	Clean sampler and repeat testing. Remove if criteria not met after repeated testing
Sampler known standard challenge	Collect low-level standard through sampler and canister and analyze canister	Before samplers are used for sampling initially	Target concentrations ±15% of reference	Clean sampler and repeat testing. Remove if criteria not met after repeated testing

The following QC parameters in Table 3 pertaining to the sampling activities of the field evaluation component of this project.

Table 3. Field evaluation sampling QC parameters

Measurement Parameter	QA/QC Check Procedure	Frequency	Acceptance Criteria	Corrective Action
Sampler leak check	Measure change in pressure in capped sampler before sampling in 2 minutes	Before each sampling event	No measurable pressure change	Tighten cap, fittings and repeat.
Sampler flow rate check	Measure change in pressure in uncapped sampler before sampling	Before each sampling event	Flow rate within ±10% of expected	Adjust flow rate according to device manual
Canister initial lab pressure	Measure canister pressure before field deployment	Before canister field deployment	<0.1 psia	Do not use for sampling
Canister initial field pressure	Measure canister pressure in field deployment	Before canister sampling	<-28" Hg	Do not use for sampling
Canister final lab pressure	Measure canister pressure in lab after sampling	After canister sample is returned to lab	Final pressure <0.5 psia difference from final field pressure	Data will be flagged
Holding time	Duration between canister sampling and analysis	After canister sample is returned to lab	≤30 days unless longer stability has been determined	Data will be flagged

Table 4 details the QC parameters related to the canister TO-15A lab analysis of the field evaluation component of this project.

Table 4. Field evaluation lab analysis QC parameters

Measurement Parameter	QA/QC Check Procedure	Frequency	Acceptance Criteria	Corrective Action
Internal standard	Measured to monitor instrument response	Added to each analysis run	Area response within ±40% of mean ICAL	Perform MS tune
Retention time	Monitor RT of each IS and target compound	All target compounds in each analysis run	RT is ≤5 s of mean ICAL	Update RTs based on CCV run
Instrument blank (IB)	Analysis run without sample addition	Run daily at the beginning of each analysis sequence	Target concentrations should be the higher of <15 pptv or <MDL	Repeat IB

Measurement Parameter	QA/QC Check Procedure	Frequency	Acceptance Criteria	Corrective Action
Lab blank	Analyze sample filled with humidified zero air	Run with each analysis sequence after CCV	Target concentrations should be the higher of <15 pptv or <MDL	Repeat analysis.; Data will be flagged
Continuing calibration verification (CCV)	Analyze mid-level calibration sample	Run daily with each analysis sequence after IB and before samples	Target concentrations within ±30% of expected	ICAL will be reanalyzed
Batch blank	Analyze humidified zero air sample from each canister cleaning batch	One canister per cleaning batch	Target concentrations should be the higher of <15 pptv or <MDL	Reclean cans in batch
Collocated sample	Field sample collected simultaneously next to primary sample using separate sampler	Once biweekly	≤25% precision	Data will be flagged
Replicate analysis	Multiple analyses from same sample	Once per sequence	≤25% precision	Data will be flagged

5. Data Analysis, Interpretation and Management

EPA ORD project team members will be responsible for all project data analysis, data management and data storage. GC/MS data will be analyzed to calculate EtO and other target VOC concentrations in field samples. A summary report of results including measurement methods, data quality indicators, target analyte concentrations, and summary statistics will be generated. Data quality will be reviewed by evaluating whether the data quality indicators were met for the lab analysis and field sampling activities.

All raw instrument data will be backed up regularly on a portable hard drive and will be transferred from the instrument to the EPA shared network drives. All processed data will be stored on the EPA network.

(QA audits?)

6. References

EPA Method TO-15

7. Appendices

Appendix A TO-15A draft?

Appendix B SOP GC/MS

Appendix C SOP Entech 7150

Appendix D SOP Entech 3100

Appendix E SOP Entech 4600A

Message

From: Nessley, Libby [/O=EXCHANGELABS/OU=EXCHANGE ADMINISTRATIVE GROUP (FYDIBOHF23SPDLT)/CN=RECIPIENTS/CN=278029DDCAB649398ECB2EBC7DB22A30-NESSLEY, LA]
Sent: 4/24/2019 6:39:42 PM
To: George, Ingrid [George.Ingrid@epa.gov]
Subject: RE: ambient EtO study QAPP
Attachments: EtO_QAPP_Cat A DRAFT.docx

Hi Ingrid,

I think since this is new work requested by OAQPS involving EtO measurements, we will need to prepare a Cat A QAPP. If it's a simple study, the Cat A template should not be too hard to complete. Any sections that are N/A, we just indicate as such. I've attached an R5 example that we've started for some of Jeff's stuff that still has some boilerplate you may be able to use. I'll look around QA Track for a more applicable example. When this is not hypothetical, we will need to let Lara know what's happening due to the advanced notification process requirements.

Thanks,
Libby

From: George, Ingrid
Sent: Monday, April 22, 2019 6:31 PM
To: Nessley, Libby <Nessley.Libby@epa.gov>
Subject: ambient EtO study QAPP

Hi Libby,

Let's say hypothetically that OAQPS wants NRMRL to lead an ambient monitoring TO-15 study where we analyze for ethylene oxide in 24 hr ambient samples collected nearby over 3 months. OAQPS will use the data internally to inform TO-15 improvements for EtO. Would a QAPP for that be category A or B?

Is there a QAPP that NRMRL might have on record that sounds similar to this kind of modest ambient monitoring study? I'm hoping I wouldn't have to write a QAPP from scratch if possible because timing seems important for this work.

Thanks,
Ingrid

Message

From: Nessley, Libby [/O=EXCHANGELABS/OU=EXCHANGE ADMINISTRATIVE GROUP (FYDIBOHF23SPDLT)/CN=RECIPIENTS/CN=278029DDCAB649398ECB2EBC7DB22A30-NESSLEY, LA]
Sent: 3/18/2019 3:15:01 PM
To: Wright, Bob [Wright.Bob@epa.gov]
Subject: Ryan EtO_Cat A QAPP
Attachments: 0021520-EP-3-0_EDIT_4-002 PSW Ryan-Emissions Measurements Support.docx; EtO_QAPP_Cat A DRAFT.docx

This is the WA (EtO is Task 5) and QAPP template that Jeff said he would like some help putting together. There is really no "meat" in the PWS regarding technical details for sampling & analysis. Long way to go....

Libby Nessley
QA Manager
U.S. Environmental Protection Agency (E330-K)
National Risk Management Research Laboratory
Air and Energy Management Division
Immedite Office/Division Support Team
Research Triangle Park, NC27711, USA
Phone: (919) 541-4381

Performance Statement of Work

WA Title: Combustion Process Emissions Measurements Methods Development Support
WA #: 4-002 WACOR: Jeff Ryan
Contract #: EP-C-15-008 Alternate WACOR: Ned Shappley

Period of Performance: The period of performance detailed in the Performance Statement of Work (PSW) shall be from April 1, 2019 through March 31, 2020.

NOTE: This work assignment is a follow-on to work performed in Option Period 3 under Work Assignment # 3-002.

Summary of Objectives:

The overall objective of this project, and therefore the primary focus of this WA, is to demonstrate the readiness and quantitative measurement performance of existing and in-development manual Reference Methods and commercially available gas analyzers or CEMs for point emissions source monitoring and compliance measurement applications for multiple HAPs and pollutants of interest, including "emerging pollutants of concern". To do so requires the development, application and demonstration of performance-based measurement approaches. A desired outcome of this work is to generate data that will support the development and revision of formal emissions measurement and monitoring procedures.

Background:

With the implementation of ORD's Path Forward initiative, the Air, Climate, Energy (ACE) research component includes targeted research specifically to support the Program Office's and their emissions measurement methods development needs. Specifically, this WA is intended to support several research "Tasks" (ACE Tasks EM-1.4, EM-1.7, EM-1.1 and SEM-2.5) identified in the ACE Research Action Plan. Moreover, this WA is intended to implement research that encompasses multiple ORD and OAR emissions measurement methods development and methods evaluation topics and needs.

These include:

- Fundamental development and evaluation of formal methods to measure perfluorinatedalkyl substance (PFAS) emissions from industrial sources and processes
- Investigation of total hydrocarbon (THC) analyzer measurement performance and comparability
- Investigation of extractive, instrumental ethylene oxide (EtO) emissions measurement technologies and approaches
- Evaluation of the adaptation of conventional ambient VOC measurement methods (e.g., TO-15, TO-11) to stationary source emissions by dynamic dilution
- Investigation of measurement issues associated with EPA Methods: 320, 25A and 18
- Investigation of high and low resolution Fourier Transform Infrared (FTIR) spectroscopy for the measurement/monitoring of organic and inorganic Hazardous Air Pollutants (HAPs)
- Evaluation and implementation of performance-based approaches for assessing emissions measurement data quality from instrumental measurement technologies

- Evaluation of innovative measurement/monitoring approaches and technologies

The purpose of this WA is to conduct research that targets the regulatory research needs identified above. This research support is expected to require laboratory and pilot-plant testing in order to fully understand the quality of the measurement technologies under investigation. An additional purpose of this WA is to support maintenance and operations of the Multipollutant Control Research Facility (MPCRF).

Scope of Work:

TASK 1. Work Plan, Reporting, Budget, And WA Management

The contractor shall prepare and deliver to the EPA WA Contract Officer Representative (WACOR) a work plan and budget within 20 days of WA effective date. The work plan must include a description of how the contractor shall accomplish each task, along with a breakdown of level of effort by professional level per task; a cost breakdown per task, and any underlying assumptions used. The contractor shall conduct activities necessary to manage the WA, including at least weekly communication with the EPA WACOR.

TASK 2. Preparation of WA QAPP(s)

Several additional QAPPs are anticipated for work not covered under the existing QAPPs. These QAPPs will be prepared primarily by the contractor as requested with guidance from the EPA WACOR. These QAPPs shall be developed according to the requirements in Appendix #1 to this Statement of Work. The Work involving environmental data shall not commence until the quality assurance documentation has received official approval from the EPA Quality Assurance Staff.

TASK 3. PFAS Emissions Measurement Methods Support

The contractor shall provide technical expertise to support PFAS emissions measurements research. This technical expertise shall include the analysis of VOC samples such as SUMMA canisters, including the evaluation of emerging PFAS compounds of interest). Technical expertise shall also be provided to perform standard laboratory sample preparation procedures, including but not limited to extractions, concentrations, as well gas chromatography (GC) mass spectrometer (MS) analysis for TBD PFAS compounds. The contractor shall also support the fabrication and operation of specialized test apparatus, such as reactors, sampling manifolds, etc., necessary to create synthetic emissions environments. This support will also require the procurement of ancillary test equipment (e.g., sampling trains, mass flow controllers, tubing, fittings, heaters, glassware, etc.) as well as expendable supplies (e.g., analytical standards, gases, reagents, filters, etc.). The WACOR will be responsible for the preparation of a separate QAPP for this Task.

TASK 4. Method 25A THC Analyzer Measurements Support

The contractor shall provide technical expertise to support the conduct of a study to compare the measurement performance of commercial total hydrocarbon analyzers (THC) operated in accordance with Method 25A. The contractor shall design and build the test manifold including plumbing, gas blending, interfaces and the data acquisition system. The contractor shall rent or lease the necessary THC analyzers. Two are estimated at this time. This support will also require the procurement of ancillary test equipment (e.g., heated sample lines, mass flow controllers, tubing, fittings, heaters, glassware, etc.) as well as expendable supplies (e.g., analytical standards, gases, reagents, filters, etc.). The contractor shall be responsible for the preparation of a separate QAPP for this Task.

TASK 5. Ethylene Oxide Measurement Support

The contractor shall provide emissions measurement and sampling expertise to support ethylene oxide (EtO) emissions measurement research activities. Specifically, the contractor shall support research efforts to evaluate instrumental and manual methods to measure EtO emissions from stationary sources. Specifically, the contractor shall lease or buy prototype instrumentation, based on GC/FTIR technology, that will be tested on multiple AEMD test equipment. The WACOR will provide additional, more detailed specifications in writing in separate communications. The contractor shall estimate the costs associated with acquiring the GC/FTIR separately and shall not procure this system without written concurrence from the WACOR to do so. The contractor shall also procure ancillary test equipment, including, but not limited to: heated sample lines of multiple construction materials, mass flow controllers, tubing, fittings, heaters, glassware, etc.) as well as expendable supplies (e.g., reference gases, reagents, filters, etc.). The WACOR and Alternate WACOR will be responsible for the preparation of a separate QAPP for this Task.

TASK 6. Emissions Measurement Support

The contractor shall provide emissions measurement and sampling expertise to support emissions measurement research activities. Specifically, the contractor shall implement standard EPA methods to sample or measure for organic, inorganic, and acid gas HAPs in combustion emissions. This will involve both manual and instrumental methodologies. Examples include, but are not limited to: M26/26A for acid gases, Method 320 (FTIR) for acid gases, VOCs, and criteria pollutants, SUMMA canisters for VOCs, and continuous emission monitors (CEMS) for gases such as THC, CO_2, O_2, CO, SO_2, and NO_x. The WACOR will be responsible for the preparation of a separate QAPP for this Task.

TASK 7. Pilot-Plant Operations to Evaluate Emissions Measurements

The contractor shall provide technical expertise to operate or support operation of combustion test facilities to provide the combustion environments necessary to evaluate emissions measurement methods and technologies. Primarily, this includes operation of EPA's Multi-Pollutant Combustion Research Facility (MPCRF) in order to establish representative measurement environments while firing on natural gas and coal combustion conditions as a minimum. In addition, various pure gases (e.g., SO2, NH3, HBr, CH4, etc.) and trace level organic gases (formaldehyde, benzene, etc.) will

need to be injected into the MPCRF's duct (upstream of measurements) to provide the necessary controlled measurement environments. APTB's diesel generator will also be used for measurements testing and will need to be operated as necessary.

TASK 8. Multi-Pollutant Combustion Research Facility – Repair and Operational Support

The majority of the pilot-scale research identified above will take place using APPCD/APTB's Multi-Pollutant Combustion Research Facility (MPCRF). This WA will support the repair, maintenance, and operations of this research facility. This WA will also procure and provide fuel (primarily coal) fuel prep and fuel storage for daily operations and testing. In addition, this WA will support the repair, maintenance, and operations of this research facility by procuring necessary repair parts (e.g., tubing, fittings, thermocouples, gauges, etc) as well as expendable materials (e.g., filters, reagents, gases, etc). Charges for the repair and maintenance of the MPCRF, including consumable and related purchases shall be tracked separately.

TASK 9. Acquire Specialized Technical Expertise for Emissions Measurements

The contractor shall arrange to acquire specialized technical expertise to expand EAMD measurement capabilities. Specific examples include, but are not limited to: expanded methods/approaches for AEMD's FTIR/UV emissions measurement system; refined approaches for dynamic spiking/performance-based data quality determinations; and adaptation of GC/FTIR for trace level organic measurements, including EtO. The contractor shall estimate the costs associated with acquiring this specialized technical expertise separately and shall not implement this without written concurrence from the WACOR to do so.

Technical Approach/Objectives

The overall objective of this WA is to fundamentally examine methods and technologies to measure multiple pollutant emissions of regulatory interest from stationary sources, including combustion sources. It is anticipated that this work will examine hot/wet extractive and dilution-based approaches and include various forms of chemical speciation. Experiments will likely require specialized testing apparatus as well as controlled emissions testing on the MPCRF.

Specific technical objectives include the development, evaluation and demonstration of PFAS and EtO emission measurement approaches and methods; the quantitative comparison of THC analyzer measurement performance under controlled conditions; and the adaptation of ambient methods by dynamic dilution.

Another significant objective of this WA is to conduct targeted testing that investigates specific issues that are related to implementation of EPA Methods 320, 25A and 18. The goal of these investigations is to evaluate potential Method measurement alternatives that may contribute to formal Method revisions.

Another objective of this WA is to evaluate FTIR, as well as other innovative monitoring technologies, as a regulatory compliance monitoring tool for select organic and acid gas HAPs.

Formaldehyde, benzene, naphthalene and acrolein along with HF and HCN are of primary interest. Technology sensitivity (detection limits), proper wavelengths for quantitation, spectral interferences, status and availability of calibration standards are examples of associated considerations. The application of ambient SUMMA canister sampling combined with dynamic dilution is also identified as a potential organic emissions measurement approach to be examined. It is anticipated that this work shall require a combination of theoretical and empirical information gathering including pilot-plant testing on the MPCRF as well as other appropriate test facilities/combustion sources.

An overarching objective of this WA is to further develop and demonstrate performance-based approaches for assessing emissions measurement data quality. These approaches are intended to comprehensively assess overall measurement quality in specific measurement environments. The ability to evaluate overall measurement accuracy, matrix effects and interferences, and limits of detection and quantitation are key elements of performance-based approaches. Dynamic spiking is the primary approach to accomplish these objectives, however the dynamic spiking approach has not been fully developed. Testing is anticipated to examine critical parameters associated with dynamic spiking – probe flow measurement accuracy, spike flow, and appropriate levels to spike as well as tracer gas measurement quality.

Quality Assurance

Multiple QAPPs will be required for this WA. These QAPPs will be prepared primarily by the contractor with additional input from the WACOR/Alternate WACOR. The QAPPs shall be developed according to the requirements in Attachment #1 to this Statement of Work. Work involving environmental data shall not commence until the quality assurance documentation has received official approval from the EPA Quality Assurance Staff.

Deliverables

Multiple deliverables are required as a function of this WA. These include, but are not limited to:

The contractor shall prepare a work plan and budget as described in Task 1. The contractor shall prepare and submit monthly reports in accordance with the terms and conditions of the contract.

Health and Safety Protocols shall be prepared and submitted for approval as required by contractor, APPCD, and SHEM safety personnel.

The contractor shall maintain at least weekly communications with the WAM. Additionally the contractor shall inform the PO and the WACOR in writing when 75% of the total funds and/or hours contained in the work plan are expended.

Draft Data Reports - Test data summaries for each test series, including brief summaries of associated testing activities and procedures, copies of all ancillary data forms and log sheets.

Final Data Reports – All raw and summarized measurements data, QA/QC report of data quality and data limitations, if any. Data from all tests will be reported in electronic files. They will be assembled in individual Excel notebooks that are unique for each test. Each Excel notebook will consist of:

- Summary page to summarize relevant information from the test
- Narrative page that will give a description of the test, analytical method, deviations from operating procedures during the analysis, deviations from specifications in the test plan or QAPP, problems encountered during the test or analysis, questions or issues concerning individual data points, special actions taken to verify data, data that should be further evaluated by the reviewer, and questions and issues to be addressed in preparation of the final data summary and report
- Data pages which contain all of the raw data as compiled by the individual instruments for field samples, lab samples, and QC samples
- QA/QC pages in which all pertinent QA/QC data are presented

Schedule of Deliverables

Work plan - within 20 days of WA effective date.

Draft Data Reports – within 2 weeks of testing completion

Final Data Reports – schedule TBD in writing by EPA WACOR

ATTACHMENT #1 TO THE STATEMENT OF WORK (SOW) FOR MEASUREMENT & METHOD DEVELOPMENT PROJECTS

NRMRL Quality Assurance (QA) Requirements

In accordance with EPA Order 5360.1 A2, conformance to ANSI/ASQC E4 must be demonstrated by submitting the quality documentation specified herein. All quality documentation shall be submitted to the Government for review. The Government will review and return the quality documentation, with comments, and indicate approval or disapproval. If the quality documentation is not approved, it must be revised to address all comments and shall be resubmitted to the Government for approval. Work involving environmental data collection, generation, use, or reporting shall not commence until the Government has approved the quality documentation. The quality documentation shall be submitted to the Government at least thirty (30) days prior to the beginning of any environmental data gathering or generation activity in order to allow sufficient time for review and revisions to be completed. After the Government has approved the quality documentation, the Contractor shall also implement it as written and approved by the Government. Any EPA-funded project/program may be subject to a QA audit.

TO BE SUBMITTED PRE-AWARD (mark all that apply):

□ **NRMRL's Quality System Specifications:**

(1) a description of the organization's Quality System (QS) and information regarding how this QS is documented, communicated and implemented;
(2) an organizational chart showing the position of the QA function;
(3) delineation of the authority and responsibilities of the QA function;
(4) the background and experience of the QA personnel who will be assigned to the project; and
(5) the organization's general approach for accomplishing the QA specifications in the SOW.

□ **Quality Management Plan:** prepared in accordance with R-2 - EPA Requirements for Quality Management Plans (EPA/240/B-01/002) March, 2001,
[HYPERLINK "http://www.epa.gov/quality/qs-docs/r2-final.pdf"]

TO BE SUBMITTED POST-AWARD (mark all that apply):

□ **NRMRL's Quality System Specifications:**

(1) a description of the organization's Quality System (QS) and information regarding how this QS is documented, communicated and implemented;
(2) an organizational chart showing the position of the QA function; 07/14/08 A-2
(3) delineation of the authority and responsibilities of the QA function;
(4) the background and experience of the QA personnel who will be assigned to the project; and
(5) the organization's general approach for accomplishing the QA specifications in the SOW.

□ **Quality Management Plan:** prepared in accordance with R-2 - EPA Requirements for Quality Management Plans (EPA/240/B-01/002) March, 2001,
[HYPERLINK "http://www.epa.gov/quality/qs-docs/r2-final.pdf"]

□ **Category A (QAPP):** prepared in accordance with R-5 - EPA Requirements for QA Project Plans (EPA/240/B-01/003) March, 2001 http://www.epa.gov/quality/qs-docs/r5-final.pdf

X **Category B QAPP:** prepared in accordance with applicable sections of the following NRMRL QAPP Requirements List(s) which is(are) included in this attachment:

X QAPP Requirements for Measurement Projects

□ QAPP Requirements for Secondary Data Projects

□ QAPP Requirements for Research Model Development and/or Application Projects

□ QAPP Requirements for Software Development Projects

X QAPP Requirements for Method Development Projects

□ QAPP Requirements for Design, Construction, and/or Operation of Environmental Technology Projects

ADDITIONAL QA RESOURCES:

EPA's Quality System Website: http://www.epa.gov/quality/
EPA's Requirements and Guidance Documents: [HYPERLINK "http://www.epa.gov/quality/qa_docs.html"]

NRMRL QAPP REQUIREMENTS FOR MEASUREMENT PROJECTS

GENERAL REQUIREMENTS:

Include cover page, distribution list, approvals, and page numbers.

0. COVER PAGE

Include the Division/Branch, project title, revision number, EPA technical lead, QA category, organization responsible for QAPP preparation, and date.

1. PROJECT DESCRIPTION AND OBJECTIVES

1.1 Describe the process and/or environmental system to be evaluated.
1.2 State the purpose of the project and list specific project objective(s).

2. ORGANIZATION AND RESPONSIBILITIES

2.1 Identify all project personnel, including QA, and related responsibilities for each participating organization, as well as their relationship to other project participants.
2.2 Include a project schedule that includes key milestones.

3. SCIENTIFIC APPROACH

3.1 Describe the sampling and/or experimental design that will be used to generate the data needed to evaluate the projective objective(s). A description of the design should include the types and numbers of samples (including QC and reserve samples), the design of the sampling network, sample locations and frequencies, and the rationale for the design.
3.2 Identify the process measurements (e.g., flow rate, temperature) and specific target analyte(s) for each sample type.
3.3 Describe the general approach and the test conditions for each experimental phase.

4. SAMPLING PROCEDURES

4.1 Describe any known site-specific factors that may affect sampling procedures as well as all site preparation (e.g., sampling device installation, sampling port modifications, achievement of steady-state) needed prior to sampling.
4.2 Describe or reference each sampling procedure (including a list of equipment needed and the calibration of this equipment as appropriate) to be used. Include procedures for homogenizing, compositing, or splitting of samples, as applicable.
4.3 Provide a list of sample containers, sample quantities to be collected, and the sample amount required for each analysis, including QC sample analysis.
4.4 Specify sample preservation requirements (e.g., refrigeration, acidification, etc.) and holding times.
4.5 Describe the method for uniquely numbering each sample.
4.6 Describe procedures for packing and shipping samples, including procedures to avoid cross-contamination, and provisions for maintaining chain-of-custody (e.g., custody seals and records), as applicable.

5 MEASUREMENT PROCEDURES

5.1 Describe in detail or reference each process measurement or analytical method to be used. If applicable, identify modifications to EPA-approved or similarly validated methods.
5.2 If not provided in Section 5.1 or the referenced method, include specific calibration procedures, including linearity checks and initial and continuing calibration checks.

6 QUALITY METRICS (QA/QC CHECKS)

6.1 For each process measurement and analytical method, identify the required QC checks (e.g., blanks, control samples, duplicates, matrix spikes, surrogates), the frequencies for performing these checks, associated acceptance criteria, and corrective actions to be performed if acceptance criteria are not met.
6.2 Any additional project-specific QA objectives (e.g., completeness, mass balance) shall be presented, including acceptance criteria.

7 DATA ANALYSIS, INTERPRETATION, AND MANAGEMENT

7.1 Identify the data reporting requirements, including data reduction procedures specific to the project and applicable calculations and equations.
7.2 Describe data validation procedures used to ensure the reporting of accurate project data.
7.3 Describe how the data will be summarized or analyzed (e.g., qualitative analysis, descriptive or inferential statistics) to meet the project objective(s).
7.3.1- If descriptive statistics are proposed, state what tables, plots, and/or statistics (e.g., mean, median, standard error, minimum and maximum values) will be used to summarize the data.
7.3.2- If an inferential method is proposed, indicate whether the method will be a hypothesis test, confidence interval, or confidence limit and describe how the method will be performed.
7.4 Describe data storage requirements for both hard copy and electronic data.

8 REPORTING

8.1 List and describe the deliverables expected from each project participant responsible for field and/or analytical activities.
8.2 Specify the expected final product(s) that will be prepared for the project (e.g., journal article, final report).

9. REFERENCES

Provide references either in the body of the text as footnotes or in a separate section.

NRMRL QAPP REQUIREMENTS FOR METHOD DEVELOPMENT PROJECTS

GENERAL REQUIREMENTS:

Include cover page, distribution list, approvals, and page numbers.

0. COVER PAGE

Include the Division/Branch, project title, revision number, EPA technical lead, QA category, organization responsible for QAPP preparation, and date.

1. PROJECT DESCRIPTION AND OBJECTIVES

1.1 Provide a description of the situation that requires the generation of a new or modified method.
1.2 State the purpose of the project and list specific project objective(s).

2. ORGANIZATION AND RESPONSIBILITIES

2.1 Identify all project personnel, including QA, and related responsibilities for each participating organization, as well as their relationship to other project participants.
2.2 Include a project schedule that includes key milestones.

3. SCIENTIFIC APPROACH

3.1 Identify the specific analyte(s) of interest and the matrix/matrices under study.
3.2 Identify the analytical approach that will be used and how it will be optimized for this study. Also describe any tests of interference and analyte stability.
3.2 Identify the method performance metrics (QA/QC checks) that will be used to evaluate the method, including the procedures used. These metrics could include (but are not limited to) positive and negative controls, sensitivity, precision, accuracy, recovery, linearity, specificity, robustness, and range.

4. SAMPLING PROCEDURES

4.1 Provide the requirements for samples that will be used to test the method (including matrix and presence/concentration of analytes).
4.2 If synthetic (i.e., laboratory-prepared) samples are used, describe the preparation of these samples.
4.3 If non-synthetic (i.e., real-world sample) samples are used, address the following:
- describe the sampling design that will be used and the steps taken to assure that representative samples are collected
- discuss or reference each sampling procedure
- provide a list of sample containers, sample quantities to be collected, and the sample amount required for each analysis, including QC sample analysis
- describe procedures for packing and shipping samples, and provisions for maintaining chain-of-custody, as applicable

4.4 Specify sample preservation requirements (e.g., refrigeration, acidification, etc.) and holding times.
4.5 Describe the method for uniquely numbering each sample.

5. MEASUREMENT PROCEDURES

5.1 Describe in detail or reference each preparation or analytical procedure to be used, if known. Include steps for preparation, calibration, measurement, quality control, and reporting.

5.2 If not provided in Section 5.1 or the referenced method, include specific calibration procedures, including linearity checks and initial and continuing calibration checks.

6. METHOD PERFORMANCE METRICS

For each method performance metric (QA/QC check) identified in Section 3.2, specify the frequencies for performing these checks, associated acceptance criteria, and corrective actions to be performed if acceptance criteria are not met.

7. DATA ANALYSIS, INTERPRETATION, AND MANAGEMENT

7.1 Identify the data reporting requirements, including data reduction procedures specific to the project and applicable calculations and equations.
7.2 Describe data validation procedures used to ensure the reporting of accurate project data.
7.3 Describe how the data will be summarized or analyzed (e.g., qualitative analysis, descriptive or inferential statistics) to meet the project objective(s).
7.3.1- If descriptive statistics are proposed, state what tables, plots, and/or statistics (e.g., mean, median, standard error, minimum and maximum values) will be used to summarize the data.
7.3.2- If an inferential method is proposed, indicate whether the method will be a hypothesis test, confidence interval, or confidence limit and describe how the method will be performed.
7.4 Describe data storage requirements for both hard copy and electronic data.

8. REPORTING

8.1 List and describe the deliverables expected from each project participant.
8.2 Specify the expected final product(s) that will be prepared for the project (e.g., journal article, final report, etc.). If a method/SOP will be developed, specify the required format.

9. REFERENCES

Provide references either in the body of the text as footnotes or in a separate section.

Message

From: Nessley, Libby [/O=EXCHANGELABS/OU=EXCHANGE ADMINISTRATIVE GROUP (FYDIBOHF23SPDLT)/CN=RECIPIENTS/CN=278029DDCAB649398ECB2EBC7DB22A30-NESSLEY, LA]
Sent: 7/29/2019 1:52:55 PM
To: Snow, Richard [Snow.Richard@epa.gov]
Subject: RE: Spiked can recovery calcs
Attachments: Spiking worksheet EO.xlsx

I think I sent you Enthalpy's calcs this morning but they are attached here as well.

From: Snow, Richard
Sent: Monday, July 29, 2019 9:51 AM
To: Nessley, Libby <Nessley.Libby@epa.gov>
Subject: Spiked can recovery calcs

Libby,

Here's my latest calcs for the EtO spiked can recoveries. Let me know what you think.
If you feel comfortable sharing Enthalpy's calcs, I'd like to take a look.

-Richard

Richard Snow | Engineering Technician
U.S. Environmental Protection Agency/ORD/NRMRL/AEMD/DSBB
109 T.W. Alexander Drive, Mail Drop E343-02
RTP, NC 27711

Office 919.541.3135 | Cell 919.621.5852
Snow.Richard@EPA.gov

Message

From: Nessley, Libby [/O=EXCHANGELABS/OU=EXCHANGE ADMINISTRATIVE GROUP (FYDIBOHF23SPDLT)/CN=RECIPIENTS/CN=278029DDCAB649398ECB2EBC7DB22A30-NESSLEY, LA]
Sent: 11/18/2019 7:35:03 PM
To: Snow, Richard [Snow.Richard@epa.gov]
Subject: RE: EtO ug/m3 Calculation

Guess we should all be on the same page if we're going to be doing calculations based on the ug/m3. I'll let Peter know they use 20 C. Thanks!

From: Snow, Richard <Snow.Richard@epa.gov>
Sent: Monday, November 18, 2019 2:32 PM
To: Nessley, Libby <Nessley.Libby@epa.gov>
Subject: RE: EtO ug/m3 Calculation

Libby,

Looks like Enthalpy uses 20 C as STP...24.056 l/mole. I think the differences found in lines 2 and 20 (see attached spreadsheet) could be attributed to rounding issues (them rounding the reported ppbv values and us using the rounded values they report to calculate ug/m3).

-Richard

From: Nessley, Libby <Nessley.Libby@epa.gov>
Sent: Monday, November 18, 2019 1:55 PM
To: Snow, Richard <Snow.Richard@epa.gov>
Subject: EtO ug/m3 Calculation

Peter uses the same formula I was using based on 1 atm, 25 C which is

ppbv=ug/m3 * 24.4 / 44.05

When I back calculation, Enthalpy is using a number different numbers---for line 2 the correction factor was 24.16, for line 23 it was 24.06-which doesn't make sense to me if it's a standard correction.
If you can determine the basis of their conversion and if it's consistent it would be great. Let me know what you find...

Thanks,

Libby

Libby Nessley
QA Manager
U.S. Environmental Protection Agency (E330-K)
Center for Environmental Measurements & Modeling (CEMM)
Air Methods & Characterization Division (AMCD)
Immedite Office/Division Support Team
Research Triangle Park, NC27711, USA
Phone: (919) 541-4381

Appointment

From: Yelverton, Tiffany [Yelverton.Tiffany@epa.gov]
Sent: 6/17/2019 7:32:41 PM
To: Yelverton, Tiffany [Yelverton.Tiffany@epa.gov]; Kariher, Peter [Kariher.Peter@epa.gov]; Wright, Bob [Wright.Bob@epa.gov]; Nessley, Libby [nessley.libby@epa.gov]
CC: BOBWINCARRBORONC@AOL.COM [BobWinCarrboroNC@aol.com]

Subject: EtO QAPP discussion
Location: E-310A

Start: 6/24/2019 2:00:00 PM
End: 6/24/2019 3:00:00 PM
Show Time As: Busy

Required Attendees: Yelverton, Tiffany; Kariher, Peter; Wright, Bob; Nessley, Libby
Optional Attendees: Bob Wright

Hello All,

I just wanted to have a quick meeting to discuss "next steps" for development of the EtO methods and measurement QAPP. I don't think it will take the full hour, but wanted us to have the space and time blocked just in case. Thank you in advance for your time and help on this.

Best,
Tiffany

Message

From: Dodder, Rebecca [Dodder.Rebecca@epa.gov]
Sent: 10/1/2019 8:28:44 PM
To: Snow, Richard [Snow.Richard@epa.gov]
Subject: RE: My Retirement

Hi Richard,

Thanks for being so through about mapping this out and for planning to be here for the Round 5 of EtO testing.

Sounds like a good plan. I'll be setting up a time to meet one-on-one to go over the steps we'll need to go through for offboarding

Thanks,
Rebecca

Rebecca Dodder, PhD
Acting Branch Chief
Combustion Sources Branch
U.S. EPA Office of Research and Development
Research Triangle Park, NC 27711
(919) 541-5376
dodder.rebecca@epa.gov

From: Snow, Richard <Snow.Richard@epa.gov>
Sent: Tuesday, October 01, 2019 1:53 PM
To: Dodder, Rebecca <Dodder.Rebecca@epa.gov>
Subject: My Retirement

Hi Rebecca,

My official retirement date will be 1/31/2020. I've attached a calendar to give you an idea of the days I will and will not be here during the next 4 months. There should not be a conflict with finishing up Round 5 of EtO testing on the dynamometer.

I think my next step in the "offboarding" process will be for me to initiate and start working my way through the certifications on EPA form 3110-2.

-Richard

Richard Snow | Engineering Technician,
U. S. Environmental Protection Agency, Office of Research and Development
Center for Environmental Measurement and Modeling, Air Methods and Characterization Division
Combustion Sources Branch
109 T.W. Alexander Drive, Mail Drop E343-02
RTP, NC 27711

Office 919.541.3135 | Cell 919.621.5852

Snow.Richard@EPA.gov

Message

From: Craig Williams [CWilliams@css-inc.com]
Sent: 7/31/2019 1:49:41 PM
To: Snow, Richard [Snow.Richard@epa.gov]
Subject: RE: Enthalpy phase 3 report

Hi Richard,
I just received the reply below and will send to All when I receive the revised report.

I'm sorry for the confusion on the pressurization sheet, but the good news is that the canister size does not affect the pressurization factor. I will update the report with the correct canister size, but your results will not change.

Craig Williams
Engineer
CSS | Office: 919.541.0336 | www.css-inc.com
An employee-owned company
Contractor to the USEPA

From: Snow, Richard [Snow.Richard@epa.gov]
Sent: Wednesday, July 31, 2019 9:48 AM
To: Craig Williams
Subject: RE: Enthalpy phase 3 report

Thanks Craig,
In the event you are out of office when they reply, could their response be forwarded to us? Our QA folks have told us no more testing until this is cleared up.

-Richard

From: Craig Williams <CWilliams@css-inc.com>
Sent: Wednesday, July 31, 2019 9:32 AM
To: Snow, Richard <Snow.Richard@epa.gov>
Cc: Long, Thomas <Long.Thomas@epa.gov>; Faircloth, James <Faircloth.James@epa.gov>; Nessley, Libby <Nessley.Libby@epa.gov>
Subject: RE: Enthalpy phase 3 report

Hi Richard,
Enthalpy received you comment and is reviewing the report and the impact, if any, on the concentration. I'll let you know when I have more information.

Thanks

Craig Williams
Engineer
CSS | Office: 919.541.0336 | www.css-inc.com
An employee-owned company
Contractor to the USEPA

From: Snow, Richard [Snow.Richard@epa.gov]
Sent: Wednesday, July 31, 2019 8:06 AM
To: Williams, Craig
Cc: Long, Thomas; Faircloth, James; Nessley, Libby
Subject: Enthalpy phase 3 report

Craig,

Could you have Enthalpy respond to the following concern regarding the Phase 3 report?

Please see page 121 of the enthalpy report concerning can # 2044. The report refers to the Can Size (L) as being 6 liters. These were 15-liter cans, so it seems the subsequent calculated volumes for this can under the various pressures may not be correct. Does this impact the reported EtO concentrations?

Richard Snow | Engineering Technician
U.S. Environmental Protection Agency/ORD/NRMRL/AEMD/DSBB
109 T.W. Alexander Drive, Mail Drop E343-02
RTP, NC 27711

Office 919.541.3135 | Cell 919.621.5852
Snow.Richard@EPA.gov

Message

From: Snow, Richard [/O=EXCHANGELABS/OU=EXCHANGE ADMINISTRATIVE GROUP (FYDIBOHF23SPDLT)/CN=RECIPIENTS/CN=93BCB20A04BA422EB6FF981D78DEF76F-SNOW, RICHARD]
Sent: 7/29/2019 1:54:02 PM
To: Nessley, Libby [nessley.libby@epa.gov]
Subject: RE: Spiked can recovery calcs

Yah, I didn't get em the first time. Thanks!

From: Nessley, Libby
Sent: Monday, July 29, 2019 9:53 AM
To: Snow, Richard <Snow.Richard@epa.gov>
Subject: RE: Spiked can recovery calcs

I think I sent you Enthalpy's calcs this morning but they are attached here as well.

From: Snow, Richard
Sent: Monday, July 29, 2019 9:51 AM
To: Nessley, Libby <Nessley.Libby@epa.gov>
Subject: Spiked can recovery calcs

Libby,

Here's my latest calcs for the EtO spiked can recoveries. Let me know what you think.
If you feel comfortable sharing Enthalpy's calcs, I'd like to take a look.

-Richard

Richard Snow | Engineering Technician
U.S. Environmental Protection Agency/ORD/NRMRL/AEMD/DSBB
109 T.W. Alexander Drive, Mail Drop E343-02
RTP, NC 27711

Office 919.541.3135 | Cell 919.621.5852
Snow.Richard@EPA.gov

Message

From: Cook, Rich [/O=EXCHANGELABS/OU=EXCHANGE ADMINISTRATIVE GROUP (FYDIBOHF23SPDLT)/CN=RECIPIENTS/CN=0533CECF88EC45A986FF4D593F1C0737-COOK, RICH]
Sent: 3/20/2019 1:10:48 PM
To: Sargeant, Kathryn [sargeant.kathryn@epa.gov]
Subject: RE: EtO Testing at ORD

I think this is one is a win-win – we need help they want to demonstrate their value to the programs.

Rich Cook
Health Effects, Benefits, and Air Toxics Center
Assessment and Standards Division
Office of Transportation and Air Quality
U. S. Environmental Protection Agency
(734)214-4827

From: Sargeant, Kathryn
Sent: Wednesday, March 20, 2019 8:17 AM
To: Cook, Rich <Cook.Rich@epa.gov>
Cc: Hoyer, Marion <hoyer.marion@epa.gov>
Subject: RE: EtO Testing at ORD

Many thanks for the clear and timely summary. I really appreciate your and Marion's leadership on this issue.

From: Cook, Rich
Sent: Tuesday, March 19, 2019 3:04 PM
To: Sargeant, Kathryn <sargeant.kathryn@epa.gov>
Cc: Hoyer, Marion <hoyer.marion@epa.gov>; Olechiw, Michael <olechiw.michael@epa.gov>; Baldauf, Richard <Baldauf.Richard@epa.gov>; Geidosch, Justine <Geidosch.Justine@epa.gov>
Subject: EtO Testing at ORD

Kathryn –

Marion, Mike O and I met with Richard Shores, Mike Hays, Tom Long, and Ingrid George today.

Bottom line is that Richard is anxious to make this happen. Short term testing will focus on determination of the presence or absence of the compound.

ORD is bringing in a LD GDI truck in a couple weeks, and next week they will be prepping for the testing. The plan is that they will collect two sets of summa canisters, and one set will go to one of the contract labs with experience measuring EtO (Enthalpy or ERG) and Ingrid will work on development of in-house capability with the other. Richard is going to work on finding a contract vehicle and we will send money for the contract lab testing.

Ingrid is going to review past GDI results to see if she can identify an EtO peak. It might co-elute with butylene or some other compound which could make it hard to find if in low concentration.

In about 6 weeks, they are planning to test a Class 8 truck (working on getting the dyno operational) and can collect more summa canisters.

Richard is about to go to his management asking to backfill the positions left open by impending retirements, so at the appropriate time we should make sure Alan Vette has this effort on his radar screen.

Rich Cook
Health Effects, Benefits, and Air Toxics Center
Assessment and Standards Division
Office of Transportation and Air Quality
U. S. Environmental Protection Agency
(734)214-4827

Message

From: Cook, Rich [/O=EXCHANGELABS/OU=EXCHANGE ADMINISTRATIVE GROUP (FYDIBOHF23SPDLT)/CN=RECIPIENTS/CN=0533CECF88EC45A986FF4D593F1C0737-COOK, RICH]
Sent: 4/10/2019 1:12:26 PM
To: Weinstock, Lewis [Weinstock.Lewis@epa.gov]; Nam, Ed [nam.ed@epa.gov]
Subject: RE: Mobile Source EtO Testing

ORD/NRMRL has done a great job pulling this together.

Rich Cook
Health Effects, Benefits, and Air Toxics Center
Assessment and Standards Division
Office of Transportation and Air Quality
U. S. Environmental Protection Agency
(734)214-4827

From: Weinstock, Lewis
Sent: Wednesday, April 10, 2019 8:06 AM
To: Cook, Rich <Cook.Rich@epa.gov>; Nam, Ed <nam.ed@epa.gov>
Subject: RE: Mobile Source EtO Testing

Hi Rich:

Good news. Thanks for the update.

Lewis Weinstock | Office of Air Quality Planning & Standards | U.S. Environmental Protection Agency | Research Triangle Park, NC 27711 | Phone: 919-541-3661|

From: Cook, Rich
Sent: Tuesday, April 09, 2019 2:28 PM
To: Weinstock, Lewis <Weinstock.Lewis@epa.gov>; Nam, Ed <nam.ed@epa.gov>
Cc: Sargeant, Kathryn <sargeant.kathryn@epa.gov>; Hoyer, Marion <hoyer.marion@epa.gov>; Geidosch, Justine <Geidosch.Justine@epa.gov>; Baldauf, Richard <Baldauf.Richard@epa.gov>; Davidson, Ken <Davidson.Ken@epa.gov>; Laroo, Chris <laroo.chris@epa.gov>; Cullen, Angela <cullen.angela@epa.gov>; Nelson, Brian <nelson.brian@epa.gov>; Olechiw, Michael <olechiw.michael@epa.gov>
Subject: Mobile Source EtO Testing

Hi Lew and Ed –

Just wanted to let you know it looks like Enthalpy is going to be able to the sample analysis for us.

We are in the process of transferring money to ORD's contract to get this done.

Rich Cook
Health Effects, Benefits, and Air Toxics Center
Assessment and Standards Division
Office of Transportation and Air Quality
U. S. Environmental Protection Agency
(734)214-4827

Message

From: Cook, Rich [/O=EXCHANGELABS/OU=EXCHANGE ADMINISTRATIVE GROUP (FYDIBOHF23SPDLT)/CN=RECIPIENTS/CN=0533CECF88EC45A986FF4D593F1C0737-COOK, RICH]
Sent: 5/17/2019 3:25:13 PM
To: Marion Hoyer [Hoyer.Marion@epa.gov]
CC: Kathryn Sargeant [Sargeant.Kathryn@epa.gov]
Subject: Current Draft of Ethylene Oxide Output
Attachments: RA4 EtO Output Description_v1.docx

As requested.

Rich Cook
Health Effects, Benefits, and Air Toxics Center
Assessment and Standards Division
Office of Transportation and Air Quality
U. S. Environmental Protection Agency
(734)214-4827

Message

From: Cook, Rich [/O=EXCHANGELABS/OU=EXCHANGE ADMINISTRATIVE GROUP (FYDIBOHF23SPDLT)/CN=RECIPIENTS/CN=0533CECF88EC45A986FF4D593F1C0737-COOK, RICH]
Sent: 7/9/2019 2:43:20 PM
To: Mo, Tiffany (Na) [mo.na@epa.gov]
Subject: Background on EtO Issue
Attachments: EtO Briefing for Chris and Sarah (002).pptx

Here is a draft briefing that has test plan, etc.

Rich Cook
Health Effects, Benefits, and Air Toxics Center
Assessment and Standards Division
Office of Transportation and Air Quality
U. S. Environmental Protection Agency
(734)214-4827

Message

From: Storhok, Ines [storhok.ines@epa.gov]
Sent: 4/11/2019 10:58:48 AM
To: Cook, Rich [Cook.Rich@epa.gov]; Paff, Patricia [paff.patricia@epa.gov]
Subject: FW: EAS Document Notification: For your approval--Requisition: PR-OAR-19-00719

This is approved.
Thanks,
Ines

-----Original Message-----
From: EAS.System@epamail.epa.gov <EAS.System@epamail.epa.gov>
Sent: Wednesday, April 10, 2019 9:34 AM
To: Storhok, Ines <storhok.ines@epa.gov>
Subject: EAS Document Notification: For your approval--Requisition: PR-OAR-19-00719

Requisition: PR-OAR-19-00719 is ready for your approval in EAS.
You may access the document at https://eas.epa.gov/
Description: Funding for WA 3-034 under contract EP-C-15-008 in ORD to fund work supporting the HD NOx Rule.
ASD Budget Info:

4812 Near-source modeling and CMAQ improvements
11 Ethylene oxide testing

Owner: Patty Klavon
Requisitioner: Patty Klavon
Technical Point of Contact: Thomas Long
Site: OAR/OTAQ/NVFEL
Issuing Office: CAD

Appointment

From: Hoyer, Marion [hoyer.marion@epa.gov]
Sent: 2/28/2019 2:45:59 PM
To: Hoyer, Marion [hoyer.marion@epa.gov]; Cook, Rich [Cook.Rich@epa.gov]; Cullen, Angela [cullen.angela@epa.gov]; Geidosch, Justine [Geidosch.Justine@epa.gov]; Laroo, Chris [laroo.chris@epa.gov]; Sargeant, Kathryn [sargeant.kathryn@epa.gov]; Nelson, Brian [nelson.brian@epa.gov]; Olechiw, Michael [olechiw.michael@epa.gov]

Subject: EtO testing next steps
Location: AA-Room-Office-C147-ConfRoom/AA-OTAQ-OFFICE

Start: 3/4/2019 5:15:00 PM
End: 3/4/2019 6:00:00 PM
Show Time As: Busy

Required Attendees: Rich Cook; Angela Cullen; Geidosch, Justine; Laroo, Chris; Kathryn Sargeant; Nelson, Brian; Michael Olechiw

I really apologize this is at lunch, but we need to move forward and it is pretty impossible to find times on our calendars next week....

I understand from the meeting last week with TATD that the decision was made to have the lab start development of a method for measuring EtO while we, in parallel, move forward with some outside testing. It sounds like ORD and SwRI were both discussed as options for the LD and HD dyno testing.
Let's pick up the conversation at that point and make some decisions about where and what is next.

Thanks much,
Marion

Message

From: Salazar-Greene, Natalie [salazar-greene.natalie@epa.gov]
Sent: 5/31/2019 12:51:15 PM
To: Derksen, Kimberly [derksen.kimberly@epa.gov]; Cullen, Angela [cullen.angela@epa.gov]; Loftis, Kathy [loftis.kathy@epa.gov]; Brusstar, Matt [brusstar.matt@epa.gov]
CC: Bryson, James [bryson.james@epa.gov]; Peralta, Maria [Peralta.Maria@epa.gov]; Laroo, Chris [laroo.chris@epa.gov]; Imfeld, Sterling [imfeld.sterling@epa.gov]
Subject: RE: visit to NRMRL - summa canister collection

That is fine with us Kim, and I just checked with Angela as well.

Thanks,

Natalie Salazar-Greene
Environmental Protection Agency
Office of Transportation and Air Quality
Assessment and Standards Division
734-214-4019
Salazar-Greene.Natalie@EPA.gov

From: Derksen, Kimberly
Sent: Friday, May 31, 2019 8:16 AM
To: Cullen, Angela <cullen.angela@epa.gov>; Loftis, Kathy <loftis.kathy@epa.gov>; Brusstar, Matt <brusstar.matt@epa.gov>; Salazar-Greene, Natalie <salazar-greene.natalie@epa.gov>
Cc: Bryson, James <bryson.james@epa.gov>; Peralta, Maria <Peralta.Maria@epa.gov>; Laroo, Chris <laroo.chris@epa.gov>; Imfeld, Sterling <imfeld.sterling@epa.gov>
Subject: RE: visit to NRMRL - summa canister collection

Jim would like to have the rental car in his name, if that's acceptable?
I can ADD to his reservation (once he confirms his return flight, as he's staying longer to visit w/son).

Thanks ☺

From: Cullen, Angela
Sent: Thursday, May 30, 2019 4:21 PM
To: Loftis, Kathy <loftis.kathy@epa.gov>; Brusstar, Matt <brusstar.matt@epa.gov>
Cc: Bryson, James <bryson.james@epa.gov>; Kolowich, Bruce <kolowich.bruce@epa.gov>; Peralta, Maria <Peralta.Maria@epa.gov>; Derksen, Kimberly <derksen.kimberly@epa.gov>; Imfeld, Sterling <imfeld.sterling@epa.gov>; Hoyer, Marion <hoyer.marion@epa.gov>; Laroo, Chris <laroo.chris@epa.gov>
Subject: RE: visit to NRMRL - summa canister collection

I received word back from ORD that Wednesday, June 5 will work. So I think it's a "go." Thank you to everyone for making this work!!

I submitted Chris' travel request today, but Natalie has gone home for the day. I will discuss it with her tomorrow.

I requested a rental car for Chris, so Kat and Jim can ride with him if they are on the same flights. I also requested flight DL 1088 which departs DTW at 7:15 am for RDU (Raleigh-Durham) and flight DL 488 which departs RDU at 5:48 pm.

Your contact at RTP is Tom Long. His contact information is:
109 T. W. Alexander Drive
Research Triangle Park, NC 27711
Phone: 919-541-3944

Please let me know if you need any other information for your travel request.

Thank you,
Angela

From: Loftis, Kathy
Sent: Thursday, May 30, 2019 2:27 PM
To: Cullen, Angela <cullen.angela@epa.gov>; Brusstar, Matt <brusstar.matt@epa.gov>
Cc: Bryson, James <bryson.james@epa.gov>; Kolowich, Bruce <kolowich.bruce@epa.gov>; Peralta, Maria <Peralta.Maria@epa.gov>; Derksen, Kimberly <derksen.kimberly@epa.gov>; Imfeld, Sterling <imfeld.sterling@epa.gov>
Subject: RE: visit to NRMRL - summa canister collection

Angela,

Thank you for the information.

Wednesday round-trip works for me. I'll stay posted pending ORD confirmation.

Kat

From: Cullen, Angela
Sent: Thursday, May 30, 2019 2:22 PM
To: Brusstar, Matt <brusstar.matt@epa.gov>
Cc: Loftis, Kathy <loftis.kathy@epa.gov>; Bryson, James <bryson.james@epa.gov>; Kolowich, Bruce <kolowich.bruce@epa.gov>; Peralta, Maria <Peralta.Maria@epa.gov>; Derksen, Kimberly <derksen.kimberly@epa.gov>; Imfeld, Sterling <imfeld.sterling@epa.gov>
Subject: RE: visit to NRMRL - summa canister collection

Thank you!

We are tentatively planning for Wednesday, June 5. There are nonstop Delta flights that leave DTW at 7:15 am and then depart Raleigh at 5:48 pm and arrive back in DTW at 7:40 pm. Would this work for Jim and Kat? It will work for Chris. I need to get a final confirmation from ORD.

Angela

From: Brusstar, Matt
Sent: Thursday, May 30, 2019 1:11 PM
To: Cullen, Angela <cullen.angela@epa.gov>
Cc: Loftis, Kathy <loftis.kathy@epa.gov>; Bryson, James <bryson.james@epa.gov>; Kolowich, Bruce <kolowich.bruce@epa.gov>; Peralta, Maria <Peralta.Maria@epa.gov>; Derksen, Kimberly <derksen.kimberly@epa.gov>
Subject: RE: visit to NRMRL - summa canister collection

Hi Angela—
Thanks for clarifying the ORD activities and purpose of the trip. In the meantime, I spoke with our team here, and we would like to have both Jim Bryson and Kat Loftis join Chris Laroo on the trip down to ORD next week. As you are likely

aware, Kat has been developing an alternative sampling and analysis method for measuring EtO, and she is also familiar with the summa canister sampling method. So, we would recommend having both Jim and Kat travel down to NRML.

Once Chris, Jim and Kat can decide on a day that's mutually acceptable, let's please coordinate travel plans. Kim Derksen will be our point of contact for travel.
Thanks,
Matt

From: Cullen, Angela
Sent: Thursday, May 30, 2019 1:06 PM
To: Brusstar, Matt <brusstar.matt@epa.gov>
Subject: RE: visit to NRMRL - summa canister collection

Matt,

ORD is only doing the sampling. Enthalpy, a contractor, is preparing the summa canisters, providing them to ORD, and conducting the analysis. So the focus of the trip in on the sampling.

I also talked to Sterling about this some today because we'll want to conduct nonroad sampling here.

Thanks!

From: Brusstar, Matt
Sent: Thursday, May 30, 2019 11:52 AM
To: Cullen, Angela <cullen.angela@epa.gov>
Subject: RE: visit to NRMRL - summa canister collection

Hi Angela—
Someone can certainly go with Chris down there. I just want to talk to Bruce on what he's doing with method development on EtO to see if we should have a chemist, an engineer, or a chemist AND an engineer join the contingent. I'll get back to you in a couple hours.
Matt

From: Cullen, Angela
Sent: Thursday, May 30, 2019 10:55 AM
To: Brusstar, Matt <brusstar.matt@epa.gov>
Subject: FW: visit to NRMRL - summa canister collection

Hi Matt,

As background, we are conducting ethylene oxide testing at ORD. The current process for doing this is to collect the exhaust samples in summa canisters and send them out for analysis. We would like to expand the capability to collect the samples here at NVFEL. Do you think either Scott Ludlam or Jim Bryson could go to NRML next week to watch them collect exhaust samples in a summa cannister and become more familiar with the process? Chris Laroo will be going too. He would likely want to go in a single day (really early flight out).

We can discuss if it's easier than email.

Thanks!
Angela

From: Peralta, Maria
Sent: Wednesday, May 29, 2019 2:42 PM
To: Cullen, Angela <cullen.angela@epa.gov>
Subject: RE: visit to NRMRL - summa canister collection

I think that would be good. I am asking Matt Brusstar (acting) as he will need to help out with seeing if they can go.

Maria

Maria Peralta
Advanced Testing Center Director
U.S. Environmental Protection Agency
National Vehicle and Fuel Emissions Laboratory
2565 Plymouth Road
Ann Arbor, MI 48105
734.214.4301 Phone
734.214.4440 Fax
peralta.maria@epa.gov

From: Cullen, Angela
Sent: Wednesday, May 29, 2019 12:56 PM
To: Peralta, Maria <Peralta.Maria@epa.gov>
Subject: FW: visit to NRMRL - summa canister collection

Maria,

Do you think either Scott or Jim Bryson could go to NRML next week to watch them collect exhaust samples in a summa cannister? Chris Laroo can go. He would likely want to go in a single day (really early flight out).

Thanks,
Angela

From: Hoyer, Marion
Sent: Wednesday, May 29, 2019 12:45 PM
To: Laroo, Chris <laroo.chris@epa.gov>; Cullen, Angela <cullen.angela@epa.gov>
Cc: Long, Thomas <Long.Thomas@epa.gov>
Subject: visit to NRMRL - summa canister collection

Hi Tom,

Thanks for the note! We appreciate you accommodating us for this! Chris Laroo and one person, yet to be determined from our lab will come down in the next 2-3 weeks. Do you have a preference when this takes place?

Marion

From: Long, Thomas
Sent: Wednesday, May 29, 2019 12:18 PM
To: Hoyer, Marion <hoyer.marion@epa.gov>
Subject: Testing

At this moment, we are looking good to complete pre-project calibrations and be ready to test starting Tuesday of next week. We would welcome one of your folks to come down and observe.

_____

Thomas Long, Mechanical Engineer
Mail Drop E343-02
Building D Room 360
109 T. W. Alexander Drive
Research Triangle Park, NC 27711
Phone: 919-541-3944

Ethylene Oxide Sampling Procedure - Draft

The following procedure is intended to facilitate summa cannister sampling of ethylene oxide from a constant volume sampler from either a chassis or engine dynamometer test site.

The contract laboratory will supply a 6 L passivated summa cannister precleaned to comply with EPA Method TO-15.[1] The laboratory will also supply a flow controller that consists of a Silcosteel passivated sample pathway that includes a vacuum gauge and a venturi sized to ensure constant sample flow into the canister over the duration of the test interval. The test interval duration must be supplied to the contract lab for each summa cannister when placing the summa cannister order. The lab will supply a controller that will maximize the amount of sample taken during the test (within the range of available off the shelf venturi flow rates) while ensuring that the vacuum decay is does not bring the venturi flow rate below critical flow. Thus, the flow controller flow rates would be different for Phase 1 vs. a combined Phase 2 and Phase 3 of the FTP. Flow controllers for background samples should also be sized according to the test duration over which the background is sampled. A list of test interval durations follows:

LD FTP Phase 1: 505s
LD FTP Phase 2: 867s
LD US06: 600s
HD Vehicle FTP: 668s
HDDE CI FTP: 1200s
HDDE SI FTP: 1167s

The flow controller also includes a vacuum gauge so that the vacuum level in the summa cannister can be recorded at the beginning and end of each test. The analytical lab must supply a flow controller for each summa cannister. Flow controller should not be reused to ensure there is no cross contamination from samples. Sample flow into the summa cannister will be proportional to the dilute exhaust gas flowrate in the CVS as the venturi flow rates for both the CVS and summa cannister flow controller will change proportionally with the change in dilute exhaust gas temperature. The sample probe must be located in close proximity to the CVS venturis to minimize differences in the dilute exhaust gas temperatures at the CVS and summa cannister verturis.

The sample/line probe should be kept as short as possible and is comprised of ¼-316 SS passivated with Restek's Silcosteel passivation technology. Any Swagelok fittings used in the sample pathway must also be passivated. The probe is designed to enter perpendicular to the flow in the tunnel and make a 90-degree bend to face upstream. The probe is never removed from the CVS. Locate the probe inlet at a point in the CVS where constituents are mixed to their mean sample concentration and locate the probe at least 10 pipe diameters downstream of any bend or protrusion into the tunnel flowpath.

---

[1] EPA. 1999. "Air Method, Toxic Organics-15 (TO-15): Compendium of Methods for the Determination of Toxic Organic Compounds in Ambient Air, Second Edition: Determination of Volatile Organic Compounds (VOCs) in Air Collected in Specially-Prepared Canisters and Analyzed by Gas Chromatography/Mass Spectrometry (GC/MS)." EPA 625/R-96/010b.

Testing is carried out as follows:

1) Select a new summa cannister and flow controller for testing and fill out the test vehicle, test type, test number, flow controller, and summa cannister number on the chain of custody sheet.

2) Remove the cap on the sample port on the summa cannister and on the downstream end of the flow controller and attach the sample flow controller to the canister 10 minutes prior to the start of the test leaving the upstream end capped.

3) Manually open and close the summa cannister valve to perform a combined vacuum and leak check. Record the vacuum value on the chain of custody sheet. Ensure that the vacuum level on the controller gauge is maintained for one minute.

4) Remove the cap from the upstream end of the controller and attach it to the sample line/probe 5 minutes prior to the start of the test.

5) The summa cannister valve is manually opened at the start of the test to begin sampling. The start of testing could be indicated by honking the vehicle's horn or by some other visual or audible means.

6) Close the summa cannister valve and record the vacuum level at the end of the test on the chain of custody form. The end of testing could be indicated by honking the vehicle's horn or by some other visual or audible means.

7) Cap the inlet to the summa cannister and both ends of the flow controller and return the summa cannister to its shipping box in preparation to send to the lab for analysis.

Message

From: Fernandez, Antonio [fernandez.antonio@epa.gov]
Sent: 6/18/2019 12:22:58 PM
To: Fulper, CarlR [Fulper.Carlr@epa.gov]
CC: Mitchell, George [Mitchell.George@epa.gov]; Nelson, Brian [nelson.brian@epa.gov]; Cullen, Angela [cullen.angela@epa.gov]
Subject: purchasing a HD gasoline truck - class 4,5,

Carl,
Follow-up on this item. We have a couple of projects that justify this purchase:
1) CTI program research for catalyst placement and temperatures
2) Measurement of EtO on these size trucks at RTP.

As you mentioned, leasing/renting is expensive and if we plan to modify exhaust, it becomes an issue to the owner. A used truck starts around $15k and a new one is around $40k

Thanks
Tony

Message

From: Dunham, Sarah [Dunham.Sarah@epa.gov]
Sent: 11/4/2019 6:33:20 PM
To: Sargeant, Kathryn [sargeant.kathryn@epa.gov]
CC: Charmley, William [charmley.william@epa.gov]; Hoyer, Marion [hoyer.marion@epa.gov]; Brusstar, Matt [brusstar.matt@epa.gov]; Cullen, Angela [cullen.angela@epa.gov]; Nelson, Brian [nelson.brian@epa.gov]; Olechiw, Michael [olechiw.michael@epa.gov]; Cook, Leila [cook.leila@epa.gov]; Birgfeld, Erin [Birgfeld.Erin@epa.gov]
Subject: Re: FYI: EtO ambient monitoring data being posted this week

Thank you, I appreciate the update and heads up.

Sent from my iPhone

On Nov 4, 2019, at 1:00 PM, Sargeant, Kathryn <sargeant.kathryn@epa.gov> wrote:

Sarah,

As you might remember from our August briefing on ethylene oxide (attached), OAQPS has been preparing to post ambient air measurements of EtO at 18 sites in the US that are not immediately adjacent to known industrial sources of EtO. These data are being posted this week (likely on Thursday), so we wanted to get you an updated pager on EtO and the potential role of mobile sources (attached).

Also, there is an internal QA related to mobile sources as follows:

I've heard that mobile sources have been identified as a source of ethylene oxide. Is that true? What is EPA doing about this?

While some preliminary studies from 50 to 60 years ago suggested that ethylene oxide may be formed when fuels are burned in an engine or in other combustion conditions, this work used methods that are outdated, and have significant uncertainties. Because of the lack of robust data and research into the potential for formation of ethylene oxide in combustion, EPA is working to develop methods that will allow us to carefully evaluate combustion sources, including mobile sources to determine the extent to which ethylene oxide may be emitted.

As we hear more about the release of the data, we'll be in touch.

<EtO Briefing for Sarah Aug 28 2019.pptx>

<Ethylene Oxide and Mobile Sources status Nov 2019.docx>

Message

From: Charmley, William [charmley.william@epa.gov]
Sent: 12/16/2019 5:41:58 PM
To: Sargeant, Kathryn [sargeant.kathryn@epa.gov]; Hoyer, Marion [hoyer.marion@epa.gov]; Cullen, Angela [cullen.angela@epa.gov]
CC: Brusstar, Matt [brusstar.matt@epa.gov]
Subject: Fwd: EtO Tailpipe emissions question

Marion and Angela

Can you draft a few bullet points that summarizes the work OTAQ and ORD have been doing regarding method development for mobile source measurement methods for ethylene oxide, which we will then use to help us characterize EtO emissons from mobile sources.

Thanks
Bill

Begin forwarded message:

From: "Hengst, Benjamin" <Hengst.Benjamin@epa.gov>
Date: December 16, 2019 at 12:07:15 PM EST
To: "Charmley, William" <charmley.william@epa.gov>, "Sargeant, Kathryn" <sargeant.kathryn@epa.gov>
Cc: "Dunham, Sarah" <Dunham.Sarah@epa.gov>, "Burch, Julia" <Burch.Julia@epa.gov>, "Cook, Leila" <cook.leila@epa.gov>
Subject: Fwd: EtO Tailpipe emissions question

Bill, Kathryn—please see below and let me know what you think. Thanks. Ben

Begin forwarded message:

From: "Cory, Preston" <Cory.Preston@epa.gov>
Date: December 16, 2019 at 12:03:48 PM EST
To: "Hengst, Benjamin" <Hengst.Benjamin@epa.gov>
Cc: "Burch, Julia" <Burch.Julia@epa.gov>, "Mroz, Jessica" <mroz.jessica@epa.gov>
Subject: EtO Tailpipe emissions question

Hi Ben,

I am wondering who in OTAC could provide info on any action OTAC is taking to address EtO. The Administrator has a meeting on Wednesday with the Illinois delegation, and he asked me to track down any action y'all are taking to address EtO tailpipe emissions, etc. Who is the best person on your team to provide this information? If he or she could fill in a few bullets on the higlighed portion below, that would be terrific! Tight timeline here...will need by COB if at all possible.

STATUS OF EPA'S WORK ON ETO:

OAR Immediate Office:
EPA is taking a **two-pronged approach** to address ethylene oxide emissions, including reviewing Clean Air Act regulations for industrial facilities that emit ethylene oxide:

1. On **November 1st**, the agency issued proposed amendments to its air toxics emissions standards for miscellaneous organic chemical manufacturing (often referred to as the MON).
   - <!--[if !supportLists]--><!--[endif]-->The proposed amendments would reduce ethylene oxide emissions from this source category by approximately 10 tons per year.
   - <!--[if !supportLists]--><!--[endif]-->The proposal is scheduled to publish in the Federal Register on **December 17th**.
   - <!--[if !supportLists]--><!--[endif]-->Two public hearings are currently scheduled: the first on January 14th in Houston, TX and the second on January 16th in Washington, DC.

2. On **December 5th** the agency issued an Advance Notice of Proposed Rulemaking (ANPRM) to solicit information from industry and the public on a potential future rulemaking to further reduce EtO from commercial sterilization and fumigation operations.
   - <!--[if !supportLists]--><!--[endif]-->In conjunction with the ANPRM the agency also solicited nominations for representatives for small entities that may be subject to a future rulemaking to advise a Small Business Advocacy Review Panel.
   - <!--[if !supportLists]--><!--[endif]-->And, on December 10th, we issued a request for information under CAA section 114 to gather information from several commercial sterilization companies on facility characteristics, control devices, work practices and costs for emission reductions.
   - <!--[if !supportLists]--><!--[endif]-->EPA hopes to finalize this rulemaking by in **spring 2020**: note that this timeline allows for EPA to gather a comprehensive data set that will ensure our rulemaking is defensible and allow for compliance with new control technology. We are issuing an ANPRM instead of an NPRM because we lack sufficient data collection to issue an NPRM at this time.

OAR OTAC:

ORD:

Thank you!
Preston

Appointment

From: Cullen, Angela [/O=EXCHANGELABS/OU=EXCHANGE ADMINISTRATIVE GROUP (FYDIBOHF23SPDLT)/CN=RECIPIENTS/CN=FF1B7C0675434915BADE463AD4619509-CULLEN, ANGELA]
Sent: 7/23/2019 2:49:12 PM
To: Swisz-Hall, Naima [swisz-hall.naima@epa.gov]

Subject: FW: GC-MS for EtO in exhaust
Location: Lab 309

Start: 7/24/2019 1:00:00 PM
End: 7/24/2019 1:30:00 PM
Show Time As: Tentative

-----Original Appointment-----
From: Loftis, Kathy
Sent: Thursday, July 18, 2019 8:52 AM
To: Loftis, Kathy; Hoyer, Marion; Cullen, Angela; Cook, Rich; Laroo, Chris; Kolowich, Bruce
Cc: Sargeant, Kathryn
Subject: GC-MS for EtO in exhaust
When: Wednesday, July 24, 2019 9:00 AM-9:30 AM (UTC-05:00) Eastern Time (US & Canada).
Where: Lab 309

At Tuesday's meeting, we gave a brief overview of concerns with using GC-MS for measuring ethylene oxide in exhaust, but did not go into the details. Our concerns encompass both qualitative and quantitative determinations. The concerns surrounding the implementation of GC-MS as an analytical tool for this scenario can be most effectively communicated through a demonstration. As such, I will be providing a demo. in the lab to illustrate some of the analytical details.

The attendees will be split into groups to accommodate space limitations and include:
Angela Cullen
Bill Charmley
Bruce Kolowich
Chris Laroo
David Haugen
Marion Hoyer
Matt Brusstar
Rich Cook

If I left folks out, please send me an email and I will include them.

Have a great day,
Kat

Kathy M. Loftis, PhD
Chemist, Fuels Chemistry Center
Testing and Advanced Technology Division
National Vehicle and Fuel Emissions Laboratory
US Environmental Protection Agency

Ph:734-214-4624
Fax: 734-214-4440
loftis.kathy@epa.gov

Message

From: Cullen, Angela [/O=EXCHANGELABS/OU=EXCHANGE ADMINISTRATIVE GROUP (FYDIBOHF23SPDLT)/CN=RECIPIENTS/CN=FF1B7C0675434915BADE463AD4619509-CULLEN, ANGELA]
Sent: 10/21/2019 12:52:39 PM
To: Hoyer, Marion [hoyer.marion@epa.gov]
Subject: RE: Bill's requested change to the EtO pager

Looks good to me

From: Hoyer, Marion <hoyer.marion@epa.gov>
Sent: Sunday, October 20, 2019 12:34 PM
To: Cullen, Angela <cullen.angela@epa.gov>
Subject: Bill's requested change to the EtO pager

Hi, I've added the phrase that we are actively testing mobile sources to this one pater (attached and the change highlighted in yellow below).

Can you let me know if this looks ok to you or of you have suggested edits?

Thx,
M

- ORD and OAR are working to develop test methods that will allow us to carefully evaluate combustion sources, including mobile sources, to determine the extent to which ethylene oxide may be emitted.
  - We are actively testing emissions from mobile sources, but until the test methods are established, we will not have reliable data to assess the amount of EtO that may be contributed from mobile sources.
  - Methods may require different and new approaches compared with ambient air measurements due to the complex composition and large variation of emissions from mobile sources.
  - With ongoing support from ORD, we anticipate a more definitive evaluation of the potential for mobile sources to contribute to ambient levels of EtO by mid-2020.

Message

From: Cullen, Angela [/O=EXCHANGELABS/OU=EXCHANGE ADMINISTRATIVE GROUP (FYDIBOHF23SPDLT)/CN=RECIPIENTS/CN=FF1B7C0675434915BADE463AD4619509-CULLEN, ANGELA]
Sent: 10/21/2019 5:23:58 PM
To: Laroo, Chris [laroo.chris@epa.gov]; Fernandez, Antonio [fernandez.antonio@epa.gov]; Walters, Charles [walters.charles@epa.gov]
Subject: RE: Potential change in test plan

I also was leaning towards #1 at this point in time, but I didn't know if anyone else felt strongly about the other options. I'll tell Tom #1 around 4:00 today unless I hear otherwise.

Thanks!

From: Laroo, Chris <laroo.chris@epa.gov>
Sent: Monday, October 21, 2019 1:07 PM
To: Cullen, Angela <cullen.angela@epa.gov>; Fernandez, Antonio <fernandez.antonio@epa.gov>; Walters, Charles <walters.charles@epa.gov>
Subject: RE: Potential change in test plan

Any thoughts here? If the data were actually repeatable, I would vote for option 3. With that said, I prefer option 1 because we need complete data sets. If the EtO emissions are high and we suspect the catalyst isn't lit off or light off is prolonged, we can always test the vehicle in the next round at a higher weight.

Regards,

Chris Laroo
Environmental Protection Specialist
US Environmental Protection Agency
Office of Transportation and Air Quality
Assessment and Standards Division
2000 Traverwood Dr.
Ann Arbor, MI 48105
(734) 214-4937
(734) 214-4055 (fax)
Email: laroo.chris@epa.gov

From: Long, Thomas <Long.Thomas@epa.gov>
Sent: Monday, October 21, 2019 8:35 AM
To: Cullen, Angela <cullen.angela@epa.gov>; Fernandez, Antonio <fernandez.antonio@epa.gov>; Laroo, Chris <laroo.chris@epa.gov>; Walters, Charles <walters.charles@epa.gov>
Cc: Snow, Richard <Snow.Richard@epa.gov>; Faircloth, James <Faircloth.James@epa.gov>
Subject: Potential change in test plan

I hope everyone had a nice weekend.

Our 2014 F-650 has a GCWR of 33,000#. To extend the period of time before the catalyst heats up, we're planning on testing it unladen – at 50% of the GCWR (which is 16,500#). We are doing a conditioning run today and start sampling tomorrow.

There are three combinations we could consider depending on whether you would rather have more repetitions of one condition or try to get an idea of differences due to the time it takes for the catalyst to light off. The underlying

assumption of these options is that the catalyst will light off sooner under the laden condition (inertia weight = 90% GCWR = 29,700#).

Option A: Three days each with 1 unladen cold start and 1 unladen warm start.
Option B: Two days with both an unladen cold start and unladen warm start followed by a third day with an unladen cold start and a fourth day with a laden cold start
Option C: Two days with both an unladen cold start and unladen warm start followed by the third day and fourth days with *laden* cold starts

My test plan calls for Option A but we could alter that to either of the other two options if you prefer. Let us know.

_____

Thomas Long, Mechanical Engineer
Mail Drop E343-02
Building D Room 360
109 T. W. Alexander Drive
Research Triangle Park, NC 27711
Phone: 919-541-3944

Message

From: Geidosch, Justine [/O=EXCHANGELABS/OU=EXCHANGE ADMINISTRATIVE GROUP (FYDIBOHF23SPDLT)/CN=RECIPIENTS/CN=892C102646DC4BF8BE7D30CF4E561F01-GEIDOSCH, JUSTINE]
Sent: 3/28/2019 2:19:12 PM
To: Shappley, Ned [Shappley.Ned@epa.gov]
CC: Loftis, Kathy [loftis.kathy@epa.gov]
Subject: Ethylene Oxide measurement methods

Hi Ned,

We really appreciated you taking the time to discuss some of your work on developing ethylene oxide measurement methods. I wanted to connect you with Kat Loftis, a chemist here at NVFEL who has recently started working on a method to measure EtO from vehicle exhaust. She's been looking at a brominated cartridge procedure – not sure if this is work that you have experience with, but thought you would likely have some valuable insight for her. She'll be able to explain in more detail what their plan in, so I'll let her take it from here!

Thanks,
Justine

Justine Geidosch
Physical Scientist, Assessment and Standards Division
Office of Transportation and Air Quality
US Environmental Protection Agency

Ph: (734) 214-4923
geidosch.justine@epa.gov

Message

From: George, Ingrid [George.Ingrid@epa.gov]
Sent: 4/15/2019 1:54:06 PM
To: Geidosch, Justine [Geidosch.Justine@epa.gov]
Subject: RE: check in on EtO testing

Hi Justine,

Another quick update: I took a look at EtO on both my GC/MS systems. Based on what I've seen so far, I think it's viable on my Markes system with no coelution issues and estimated MDLs in the few 10s of ppts. I'd need to get a lower level standard and more QC checks to get it to the full TO-15 quantitative analysis level.

Thanks,
Ingrid

From: Geidosch, Justine
Sent: Thursday, April 11, 2019 1:41 PM
To: George, Ingrid <George.Ingrid@epa.gov>
Subject: RE: check in on EtO testing

Hi Ingrid,

Thanks so much for the update. Definitely interested in how it goes, so let me know!

Thanks again,
Justine

From: George, Ingrid
Sent: Wednesday, April 10, 2019 3:57 PM
To: Geidosch, Justine <Geidosch.Justine@epa.gov>
Subject: RE: check in on EtO testing

Hi Justine,

Quick update on this – I got my hands on a higher level EtO standard and plan to do a quick scoping to see if I can semi-quantitate or not on my systems. I'll let you know how it goes if you're interested.

Thanks,
Ingrid

From: Geidosch, Justine
Sent: Monday, April 08, 2019 10:41 AM
To: George, Ingrid <George.Ingrid@epa.gov>
Subject: RE: check in on EtO testing

Oh gosh, quite the wait for a cal standard. Well, keep me posted if you do start working on the method and if there is any OTAQ resources that could help.

Thanks,
Justine

From: George, Ingrid
Sent: Monday, April 08, 2019 10:30 AM
To: Geidosch, Justine <Geidosch.Justine@epa.gov>
Subject: RE: check in on EtO testing

Hi Justine,

Good to hear you're working on EtO and I'd be interested to hear how it works out for you. I would like to work on it, but I don't have a calibration standard and it could take a month to several months to get that (I've been waiting on one mix for a year!). It's definitely on my to do list!

Thanks,
Ingrid

From: Geidosch, Justine
Sent: Monday, April 08, 2019 9:49 AM
To: George, Ingrid <George.Ingrid@epa.gov>
Subject: check in on EtO testing

Hi Ingrid,

I just wanted to check in with you on the method development status for the ethylene oxide analysis. We're working on finding a laboratory to find an outside laboratory to do the testing is addition to our chem lab working on a method, and I've gotten a couple of questions wondering if you were still working on a method as well.

Thanks!

Justine

Justine Geidosch
Physical Scientist, Assessment and Standards Division
Office of Transportation and Air Quality
US Environmental Protection Agency

Ph: (734) 214-4923
geidosch.justine@epa.gov

Message

From: George, Ingrid [George.Ingrid@epa.gov]
Sent: 5/29/2019 9:00:30 PM
To: Geidosch, Justine [Geidosch.Justine@epa.gov]
Subject: new EtO instrument

Hi Justine,

Do you have a few minutes this week to chat about OTAQ needs for the new EtO TO-15 instrument OTAQ might be willing to fund for the VOC lab? Mainly, I would like to get a sense on expectations of sample analysis workload (# samples expected to be analyzed per year) and other analytical needs apart from EtO analysis.

Thanks,
Ingrid

Ingrid George
Physical Scientist
U.S. Environmental Protection Agency
109 T. W. Alexander Drive
Research Triangle Park, NC 27711
Mail Code: E343-02
Ph: 919-541-9780

Message

From: Shappley, Ned [Shappley.Ned@epa.gov]
Sent: 3/28/2019 2:56:48 PM
To: Loftis, Kathy [loftis.kathy@epa.gov]
CC: Geidosch, Justine [Geidosch.Justine@epa.gov]
Subject: RE: Ethylene Oxide measurement methods

Kat,

We too are evaluating the brominated sorbent trap option (NIOSH/OSHA method) but for near-source instead of source. Let me know you availability and we can discuss some of the measurement options we are perusing.

Thanks,
Ned

From: Geidosch, Justine
Sent: Thursday, 28 March, 2019 10:19
To: Shappley, Ned <Shappley.Ned@epa.gov>
Cc: Loftis, Kathy <loftis.kathy@epa.gov>
Subject: Ethylene Oxide measurement methods

Hi Ned,

We really appreciated you taking the time to discuss some of your work on developing ethylene oxide measurement methods. I wanted to connect you with Kat Loftis, a chemist here at NVFEL who has recently started working on a method to measure EtO from vehicle exhaust. She's been looking at a brominated cartridge procedure – not sure if this is work that you have experience with, but thought you would likely have some valuable insight for her. She'll be able to explain in more detail what their plan in, so I'll let her take it from here!

Thanks,
Justine

Justine Geidosch
Physical Scientist, Assessment and Standards Division
Office of Transportation and Air Quality
US Environmental Protection Agency

Ph: (734) 214-4923
geidosch.justine@epa.gov

Message

From: Walters, Charles [walters.charles@epa.gov]
Sent: 8/20/2019 3:28:53 PM
To: Haugen, David [haugen.david@epa.gov]; Brusstar, Matt [brusstar.matt@epa.gov]; Kolowich, Bruce [kolowich.bruce@epa.gov]; Imfeld, Sterling [imfeld.sterling@epa.gov]; Peralta, Maria [Peralta.Maria@epa.gov]; Loftis, Kathy [loftis.kathy@epa.gov]; Bryson, James [bryson.james@epa.gov]; Sun, Ruonan [sun.ruonan@epa.gov]; Slater, Jonathan [Slater.Jonathan@epa.gov]
Subject: Proposed agenda for EtO coordination meeting tomorrow

Proposed Agenda

- In-house EtO analytical development (Kathy, Bruce)
- High-Level Summary of Data Review concerns of ORD testing and Enthalpy sample analysis
  - Analytical method (Kathy, Bruce)
  - Sampling method (Chuck)
- Nonroad small engine testing
  - Summary of Canister Testing (Chuck)
  - N2O sample port
  - Operator prompt to start sample
  - Timing (dependent on ORD test results, most likely Oct or Nov)
  - Possible small engine test to support in-house analytical development (Kathy)
  - QAPP update (Chuck)
  - FRHR update (Kathy, Chuck)
- Facilities guidance is to amend 19-111 to expand scope to small engines and include canister sampling
  - Flow study to address proportionality concern (Chuck)
- Meter procurement update
  - Meters ordered, expected end of August
- Future Meeting Frequency (Team)

Appointment

From: Loftis, Kathy [loftis.kathy@epa.gov]
Sent: 9/3/2019 10:16:29 PM
To: Kolowich, Bruce [kolowich.bruce@epa.gov]

Subject: FW: EtO discussion on Analytical Methods
Location: AA-Room-Office-S00-ConfRoom/AA-OTAQ-OFFICE

Start: 9/4/2019 12:30:00 PM
End: 9/4/2019 1:00:00 PM
Show Time As: Tentative

-----Original Appointment-----
From: Cullen, Angela <cullen.angela@epa.gov>
Sent: Thursday, August 29, 2019 3:42 PM
To: Cullen, Angela; Loftis, Kathy; Hoyer, Marion; Walters, Charles; Laroo, Chris; Fernandez, Antonio
Subject: EtO discussion on Analytical Methods
When: Wednesday, September 4, 2019 8:30 AM-9:00 AM (UTC-05:00) Eastern Time (US & Canada).
Where: AA-Room-Office-S00-ConfRoom/AA-OTAQ-OFFICE

Please forward to anyone that should join us. Also, please let me know if this is a bad time.

Message

From: Walters, Charles [walters.charles@epa.gov]
Sent: 9/17/2019 5:40:32 PM
To: Haugen, David [haugen.david@epa.gov]; Brusstar, Matt [brusstar.matt@epa.gov]; Kolowich, Bruce [kolowich.bruce@epa.gov]; Imfeld, Sterling [imfeld.sterling@epa.gov]; Peralta, Maria [Peralta.Maria@epa.gov]; Loftis, Kathy [loftis.kathy@epa.gov]; Bryson, James [bryson.james@epa.gov]; Sun, Ruonan [sun.ruonan@epa.gov]; Slater, Jonathan [Slater.Jonathan@epa.gov]
Subject: Proposed agenda for EtO coordination meeting tomorrow, Sept 18

Proposed Agenda

- In-house EtO analytical development (Kathy, Bruce)

- Nonroad small engine testing

  - Summary of Canister Testing (Chuck)
  - N2O sample port (plan to use, D Smail to make up sample line)
  - Operator prompt to start sample (labview mod required, would like to have Paul do this next week if testing allows)
  - Timing (dependent on ORD test results & In-house analytical development, tentative Oct or Nov)
    - Need to determine dates for this testing
    - Schedule around ETC confirmatory testing
    - Lead time to order Enthalpy canisters/controllers

  - Possible small engine test to support in-house analytical development (Kathy)

  - QAPP with ATD covers EtO testing

  - FRHR update (Kathy, Chuck)

  - Amendment to FRHR 19-111 signed Sept 11th
    - Covers ETC and ATC test areas
    - EtO recoveries
    - Canister sampling

  - Flow study to address proportionality concern (Chuck)

  - Meter procurement update (0.5, 1, 2 slpm)
    - Meters received late August
    - Meters tested and ready for service
    - Chuck's laptop loaded with software, tested, and configured to collect data

- Future Meeting Frequency (Team)

Appointment

From: Walters, Charles [walters.charles@epa.gov]
Sent: 10/1/2019 11:51:28 AM
To: Brusstar, Matt [brusstar.matt@epa.gov]; Kolowich, Bruce [kolowich.bruce@epa.gov]; Imfeld, Sterling [imfeld.sterling@epa.gov]; Peralta, Maria [Peralta.Maria@epa.gov]; Loftis, Kathy [loftis.kathy@epa.gov]; Bryson, James [bryson.james@epa.gov]; Sun, Ruonan [sun.ruonan@epa.gov]; Slater, Jonathan [Slater.Jonathan@epa.gov]; Haugen, David [haugen.david@epa.gov]

Subject: EtO Testing Coordination
Location: AA-Room-Lab-221-TATDConfRoom/AA-OTAQ-LAB

Start: 10/3/2019 8:00:00 PM
End: 10/3/2019 8:30:00 PM
Show Time As: Tentative

Required Attendees: Brusstar, Matt; Kolowich, Bruce; Imfeld, Sterling; Peralta, Maria; Loftis, Kathy; Bryson, James; Sun, Ruonan; Slater, Jonathan; Haugen, David

Agenda:

Discuss EtO testing in small engines: 1st week in November

- Flow tests of Enthalpy canisters and controllers
- Canister samples sent to Enthalpy for analysis
- In house method

Project: Enter Tracking Number 19-111

NVFEL Facility Request and Hazard Review (FRHR)

A. Tracking Information

(Completed by SQFMC after the form is submitted.)

Facility Request and Hazard Review Number	Enter Tracking Number 19-111
Date Received	Click to select date 5/21/19
Date Completed	Click to select date
Amendment	☐ No ☐ Yes

[Step 1 of Flow Chart – Management Definition of Project]

B. Project Information

(Complete Section B, then submit form in Pending FRHR inbox in Room 608.)

Requester		Kathy Loftis
Email		Loftis.kathy@epa.gov
Phone		734-214-4624
Division/Center		TATD/FCC
Date Submitted		
Project Title		EtO Emissions Monitoring
Key Inputs:		Complete known Key inputs below:
	Room or Area	*Note if any of the activities will be performed outside or at other facilities or locations.* Cold Cell
	Scope	*Note if new equipment, machinery, processes, or systems are being installed; existing equipment is being replaced, upgraded, or removed; what utilities are required.* Will be measuring ethylene oxide recovery using 10ppm or 1% EtO gas standard in Cold Cell. Pressurized gas cylinder containing ethylene oxide will be connected in-line and ethylene oxide will be recovered in sampler where it will react to form a less-reactive product, which will subsequently be analyzed. This FRHR is being initiated because a portable EtO monitor will be used during sample collection
	Contract Mechanism	NA
	Funding/Budget	NA
	POC Requester	Kathy M. Loftis
	POC Facilities	Initially will be Facility Manager Adam Wagner
	POC Safety	Safety Officer Bill Antoszewski
	Deviations to Equipment Responsibility	☒ No ☐ Yes If Yes, describe deviations.

Estimated date by which modification or process needs to be implemented	*Allow adequate time for the FRHR process to be completed.* 5/20/2019
Is the modification or process permanent or temporary?	☐ Permanent ☒ Temporary and no longer required after Click to select date

NVFEL Facility Request and Hazard Review (FRHR)

Management Authorizes Project and Commits Resources

Requesting Center Director signature and date:	Area Center Director signature and date:
for JBruce Rolowich 5/8/2019	for JBruce Rolowich

NVFEL Facility Request and Hazard Review (FRHR)
Short Form

[Steps 2 and 3 of Flow Chart – Initiate and Conduct Facility Request and Hazard Review Meetings]

C. Facility Request and Hazard Review Information

This section is to identify changes to the facility, potential hazards, and existing or proposed controls to mitigate the hazards. Attach extra sheets, drawings, etc., as needed.

1. Facility Changes

   Enter text. Note responsible party to perform work.

2. Clean Power (expand paragraph for entry fields by clicking on triangle in left margin)

3. Mezzanine Loading and Storage (expand paragraph for entry fields by clicking on triangle in left margin)

4. Hazards and Operational Controls

   Enter text. Note responsible party to perform work.

D. Approvals

[Step 4 of Flow Chart – Implementation Approval] Proposed changes are ready to be implemented	*[Step 6 of Flow Chart – Final Sign-off]* Tasks have been completed
Requester POC signature and date:	Requester POC signature and date:
Requesting Center Director signature and date:	Requesting Center Director signature and date:
Area Center Director signature and date:	Area Center Director signature and date:
Facility Manager signature and date:	Facility Manager signature and date:
Safety Officer signature and date:	Safety Officer signature and date:
Safety Supervisor signature and date:	Safety Supervisor signature and date:
Safety, Quality, and Facilities Management Center Director signature and date:	Safety, Quality, and Facilities Management Center Director signature and date:

FRHR Initiation Meeting Agenda/Minutes

FRHR 19-111 EtO Emissions Testing

Date: 5/21/2019

Requestor: Kat Loftis
Project Officer/COR: Kat Loftis
Facilities POC: Adam Wagner
Safety POC: Bill Antoszewski

Attendees: Kat Loftis, Jim Bryson, Adam Wagner, Bill Antoszewski,

Contracting/Funding Source: Labor and materials will be provided by TATD (FCC)

Project/Hazard Description: FCC is proposing to do a pilot test to measure ethylene oxide emissions in the Cold Test facility.

Equipment Responsibility: All equipment required for this project is already installed and available.

FRHR Process: This meeting is intended to jointly identify the information needed by the requestor to complete Section B. *Project Information* of the FRHR Standard Form.

- Next steps
  - Requestor will complete Section B. of the FRHR form, obtain approval from their work center director, and submit the FRHR form to SQFM.
  - Requestor will research and/or initiate follow on meetings with Facilities and Safety to complete Section C. and D of the FRHR form
- Requestor is NOT authorized to proceed with the project until the FRHR is approved in Section E. of the FRHR form.

Items Discussed:

Reference:

- Pictures next page

FCC is proposing to do a pilot test to measure ethylene oxide emissions in the Cold Test facility.

EtO to be used will be in a small (50 lbs +/-) cylinder. The EtO is at a 1% concentration (10,000 ppm) and will stored in the cylinder storage room. EtO will be transferred to 500ml pressurized cylinders for performing the test. The transfer will be closed circuit. (Note: LEL for EtO gas is 2.6%).

EtO will be injected into a vehicle exhaust line (reference pictures), enter the dilution tunnel and be drawn from the exhaust stream to the analyzer. The process is the same one used to inject propane into the system.

FCC has verified that the existing equipment and components are compatible with EtO.

At the analyzer, the EtO will be converted to 2-bromoethanol and captured for analysis in the Chemistry Laboratory.

Kat Loftis will wear a Drager Pac Series personal gas detection monitor to detect any EtO that may escape the test stream. (Note: according to the Drager website, the monitor is sensitive enough for detection in the 0-200 ppm range).

Facilities - There are no Facilities issues associated with this project.

Safety - The large cylinder will be proper stored in the compressed gas cylinder storage room. With the EtO < LEL and large dilution factor, there should be no fire or explosive hazards associated with this test procedure. The gas detection monitor should quickly identify any loss of EtO into the personal breathing zone.

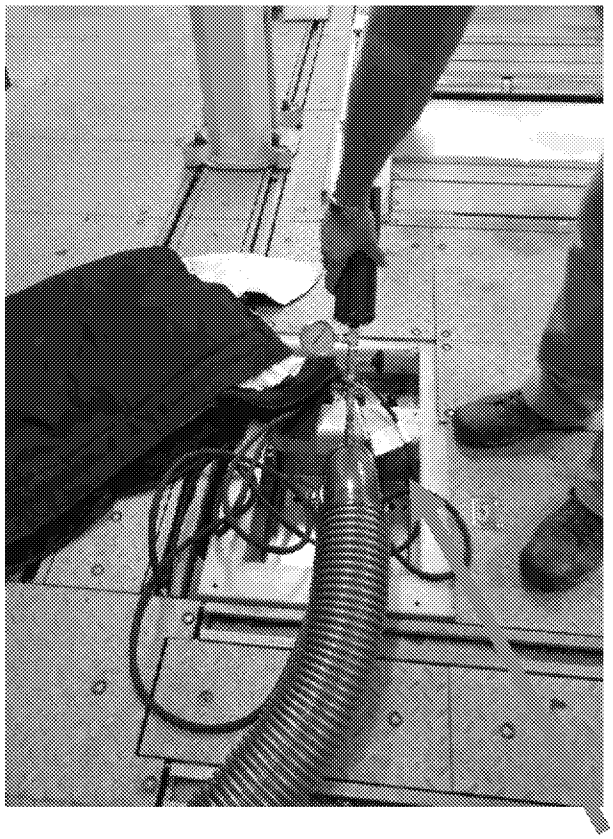

Potential sample injection points

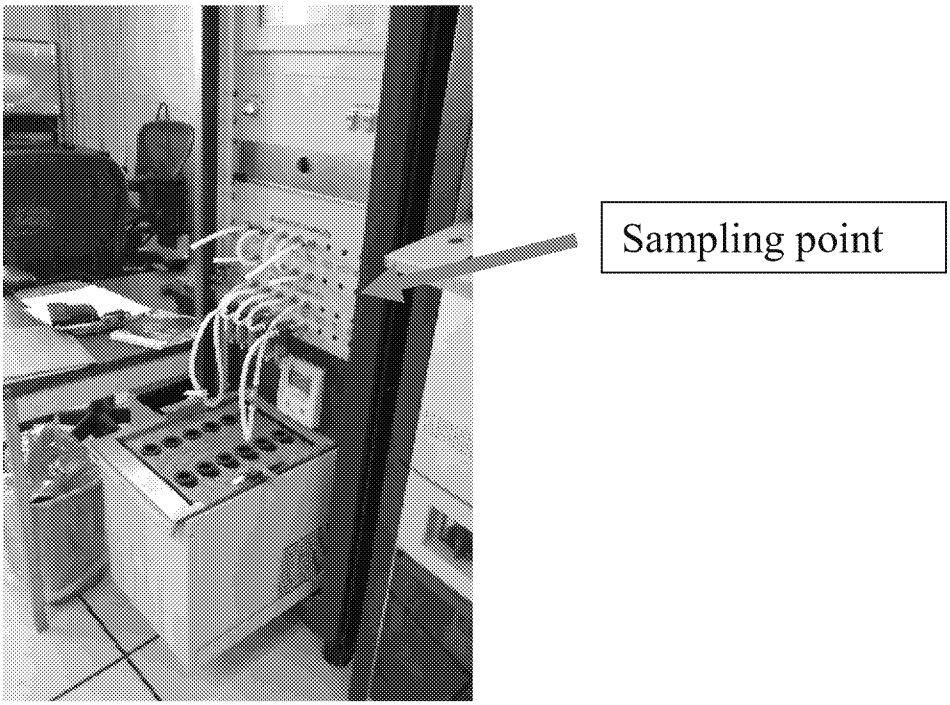

B. Antoszewski/30 May 2019

DISTRIBUTION

Kat Loftis
Jim Bryson
Adam Wagner
Bruce Kolowich
Ruth Schenk
Mike Geeting
Carla Ward
Dave Hall

Project: Enter Tracking Number 19-111

NVFEL Facility Request and Hazard Review (FRHR)

A. Tracking Information

(Completed by SQFMC after the form is submitted.)

Facility Request and Hazard Review Number	Enter Tracking Number 19-111
Date Received	Click to select date 5/21/19
Date Completed	Click to select date
Amendment	☐ No ☐ Yes

[Step 1 of Flow Chart – Management Definition of Project]

B. Project Information

(Complete Section B, then submit form in Pending FRHR inbox in Room 608.)

Requester		Kathy Loftis
Email		Loftis.kathy@epa.gov
Phone		734-214-4624
Division/Center		TATD/FCC
Date Submitted		
Project Title		EtO Emissions Monitoring
Key Inputs:		Complete known key inputs below:
	Room or Area	*Note if any of the activities will be performed outside or at other facilities or locations.* Cold Cell
	Scope	*Note if new equipment, machinery, processes, or systems are being installed; existing equipment is being replaced, upgraded, or removed; what utilities are required.* Will be measuring ethylene oxide recovery using 10ppm or 1% EtO gas standard in Cold Cell. Pressurized gas cylinder containing ethylene oxide will be connected in-line and ethylene oxide will be recovered in sampler where it will react to form a less-reactive product, which will subsequently be analyzed. This FRHR is being initiated because a portable EtO monitor will be used during sample collection
	Contract Mechanism	NA
	Funding/Budget	NA
	POC Requester	Kathy M. Loftis
	POC Facilities	Initially will be Facility Manager Adam Wagner
	POC Safety	Safety Officer Bill Antoszewski
	Deviations to Equipment Responsibility	☒ No ☐ Yes If Yes describe deviations.

Estimated date by which modification or process needs to be implemented	*Allow adequate time for the FRHR process to be completed.* 5/20/2019
Is the modification or process permanent or temporary?	☐ Permanent ☒ Temporary and no longer required after Click to select date

Project: Enter Tracking Number: 19-111

NVFEL Facility Request and Hazard Review (FRHR)

Management Authorizes Project and Commits Resources

Requesting Center Director signature and date:	Area Center Director signature and date:
for JBNCE Rolowich 5/8/2019	for JBNCE ROLOWICH

Project: Enter Tracking Number

NVFEL Facility Request and Hazard Review (FRHR)
Short Form

[Steps 2 and 3 of Flow Chart – Initiate and Conduct Facility Request and Hazard Review Meetings]

C. Facility Request and Hazard Review Information

This section is to identify changes to the facility, potential hazards, and existing or proposed controls to mitigate the hazards. Attach extra sheets, drawings, etc., as needed.

1. Facility Changes

   Enter name of responsible party to perform work.

2. Clean Power (expand paragraph for entry fields by clicking on triangle in left margin)

3. Mezzanine Loading and Storage (expand paragraph for entry fields by clicking on triangle in left margin)

4. Hazards and Operational Controls

   Enter name of responsible party to perform work.

D. Approvals

[Step 4 of Flow Chart – Implementation Approval] Proposed changes are ready to be implemented	*[Step 6 of Flow Chart – Final Sign-off]* Tasks have been completed
Requester POC signature and date:	Requester POC signature and date:
Requesting Center Director signature and date:	Requesting Center Director signature and date: 6/11/19
Area Center Director signature and date:	Area Center Director signature and date: 6/11/19
Facility Manager signature and date: Mike Cocking 6/11/19	Facility Manager signature and date:
Safety Officer signature and date: 6/11/19	Safety Officer signature and date:
Safety Supervisor signature and date: 6/11/2019	Safety Supervisor signature and date:
Safety, Quality, and Facilities Management Center Director signature and date: 6/11/2019	Safety, Quality, and Facilities Management Center Director signature and date:

Message

From: Loftis, Kathy [loftis.kathy@epa.gov]
Sent: 8/1/2019 4:57:42 PM
To: Walters, Charles [walters.charles@epa.gov]; Haugen, David [haugen.david@epa.gov]; Brusstar, Matt [brusstar.matt@epa.gov]; Kolowich, Bruce [kolowich.bruce@epa.gov]; Imfeld, Sterling [imfeld.sterling@epa.gov]; Peralta, Maria [Peralta.Maria@epa.gov]; Bryson, James [bryson.james@epa.gov]; Sun, Ruonan [sun.ruonan@epa.gov]; Slater, Jonathan [Slater.Jonathan@epa.gov]
Subject: RE: Proposed agenda for EtO coordination meeting tomorrow
Attachments: 190726_QuestionsForEnthalpy_Summarized.pdf

In advance of today's meeting, I threw together a document to highlight some of the analytical issues we (TATD and ASD) have been discussing with ORD. I thought it might be easier to scan some of these details before the meeting.

From: Walters, Charles <walters.charles@epa.gov>
Sent: Wednesday, July 31, 2019 2:15 PM
To: Haugen, David <haugen.david@epa.gov>; Brusstar, Matt <brusstar.matt@epa.gov>; Kolowich, Bruce <kolowich.bruce@epa.gov>; Imfeld, Sterling <imfeld.sterling@epa.gov>; Peralta, Maria <Peralta.Maria@epa.gov>; Loftis, Kathy <loftis.kathy@epa.gov>; Bryson, James <bryson.james@epa.gov>; Sun, Ruonan <sun.ruonan@epa.gov>; Slater, Jonathan <Slater.Jonathan@epa.gov>
Subject: Proposed agenda for EtO coordination meeting tomorrow

Proposed Agenda

- In-house EtO analytical development (Kathy, Bruce)
- High-Level Summary of Data Review concerns of ORD testing and Enthalpy sample analysis
  - Analytical method (Kathy, Bruce)
  - Sampling method (Chuck)
- Nonroad small engine testing
  - Summary of Canister Testing (Chuck)
  - Possible small engine test to support in-house analytical development (Kathy)
  - QAPP
  - FRHR
  - Flow study to address proportionality concern (Chuck)
- Meter procurement
- Vacuum source to evacuate canisters
- Future Meeting Frequency (Team)

Message

From: Loftis, Kathy [loftis.kathy@epa.gov]
Sent: 8/1/2019 7:51:45 PM
To: Walters, Charles [walters.charles@epa.gov]
CC: Kolowich, Bruce [kolowich.bruce@epa.gov]
Subject: Emailing: FRHR 19-111 EtO Emissions Monitoring.pdf
Attachments: FRHR 19-111 EtO Emissions Monitoring.pdf

Chuck,

I've attached a copy of the FRHR for EtO testing in Cold Cell. I am happy to modify the document as needed once we have more information from Ruth/Carla/Bill.

Best,
Kat

Your message is ready to be sent with the following file or link attachments:

FRHR 19-111 EtO Emissions Monitoring.pdf

Note: To protect against computer viruses, e-mail programs may prevent sending or receiving certain types of file attachments. Check your e-mail security settings to determine how attachments are handled.

Message

From: Kolowich, Bruce [/O=EXCHANGELABS/OU=EXCHANGE ADMINISTRATIVE GROUP (FYDIBOHF23SPDLT)/CN=RECIPIENTS/CN=6EC6AEAC973344FDA2A08C5BBDAFF610-KOLOWICH, BRUCE]
Sent: 11/7/2019 9:48:17 PM
To: Brusstar, Matt [brusstar.matt@epa.gov]; Loftis, Kathy [loftis.kathy@epa.gov]; Walters, Charles [walters.charles@epa.gov]
Subject: RE: SLT one-pager on EtO

Hi Matt,

This looks good. It might be worth mentioning that we believe the NIOSH method avoids some of the challenges of instability of Ethylene Oxide Gas Standards. You might have better perspective on this point that I would.

Bruce

From: Brusstar, Matt <brusstar.matt@epa.gov>
Sent: Thursday, November 7, 2019 9:49 AM
To: Kolowich, Bruce <kolowich.bruce@epa.gov>; Loftis, Kathy <loftis.kathy@epa.gov>; Walters, Charles <walters.charles@epa.gov>
Subject: SLT one-pager on EtO

Kat, Chuck, Bruce—

Below is a paragraph for a one-page briefing on EtO that's being prepared for the upcoming SLT retreat. Can you please give me any comments/suggested revisions you may have by COB today?

Thanks,
Matt

Mobile Source Evaluations

- In 2019, we conducted testing on two gasoline light-duty vehicles, one gasoline heavy-duty vehicle, and one diesel heavy-duty vehicle at ORD using EPA Method TO-15 (summa canisters). Many lessons have been learned, which are being used to improve the sampling and analysis methods throughout the testing.
- We have initiated a cross-divisional effort to conduct EtO measurements at NVFEL in 2020 FY.
  - We plan to test a nonroad gasoline engine, light-duty vehicle, and heavy-duty vehicle using the EPA Method TO-15, with a focus on improving the proportionality of the samples.
  - In parallel, we are developing a new test method, a NIOSH monitoring method, to measure EtO from exhaust. The following are two of the primary goals associated with the development of the NIOSH method.
    - Validation of the measurements of EtO emissions using two separate methods.
    - The NIOSH method of sampling and analysis of EtO emissions can be done at NVFEL and at a lower cost than the EPA Method TO-15 measurements.

Appointment

From: Walters, Charles [walters.charles@epa.gov]
Sent: 8/6/2019 2:34:43 PM
To: Walters, Charles [walters.charles@epa.gov]; Haugen, David [haugen.david@epa.gov]; Brusstar, Matt [brusstar.matt@epa.gov]; Kolowich, Bruce [kolowich.bruce@epa.gov]; Imfeld, Sterling [imfeld.sterling@epa.gov]; Peralta, Maria [Peralta.Maria@epa.gov]; Loftis, Kathy [loftis.kathy@epa.gov]; Bryson, James [bryson.james@epa.gov]; Sun, Ruonan [sun.ruonan@epa.gov]; Slater, Jonathan [Slater.Jonathan@epa.gov]

Subject: EtO Testing Coordination
Location: AA-Room-Lab-221-TATDConfRoom/AA-OTAQ-LAB

Start: 8/21/2019 5:00:00 PM
End: 8/21/2019 5:30:00 PM
Show Time As: Busy

Required Attendees: Haugen, David; Brusstar, Matt; Kolowich, Bruce; Imfeld, Sterling; Peralta, Maria; Loftis, Kathy; Bryson, James; Sun, Ruonan; Slater, Jonathan

Appointment

From: Haugen, David [haugen.david@epa.gov]
Sent: 6/10/2019 2:56:58 PM
To: Haugen, David [haugen.david@epa.gov]; Loftis, Kathy [loftis.kathy@epa.gov]; Bryson, James [bryson.james@epa.gov]; Walters, Charles [walters.charles@epa.gov]; Peralta, Maria [Peralta.Maria@epa.gov]; Kolowich, Bruce [kolowich.bruce@epa.gov]

Subject: NRMRL trip last week - EtO
Location: AA-Room-Lab-221-TATDConfRoom/AA-OTAQ-LAB

Start: 6/11/2019 7:00:00 PM
End: 6/11/2019 7:30:00 PM
Show Time As: Busy

Required Attendees: Loftis, Kathy; Bryson, James; Walters, Charles; Peralta, Maria; Kolowich, Bruce

Debrief on what we learned from the trip to ORD\NRMRL, what plans are for NRMRL and "bringing an analytical method on-line" by purchase of a piece of equipment, and how our testing can compliment what is happening at NRMRL.

Appointment

From: Walters, Charles [walters.charles@epa.gov]
Sent: 10/31/2019 4:43:28 PM
To: Walters, Charles [walters.charles@epa.gov]; Brusstar, Matt [brusstar.matt@epa.gov]; Kolowich, Bruce [kolowich.bruce@epa.gov]; Imfeld, Sterling [imfeld.sterling@epa.gov]; Peralta, Maria [Peralta.Maria@epa.gov]; Loftis, Kathy [loftis.kathy@epa.gov]; Bryson, James [bryson.james@epa.gov]; Sun, Ruonan [sun.ruonan@epa.gov]; Slater, Jonathan [Slater.Jonathan@epa.gov]; Haugen, David [haugen.david@epa.gov]

Subject: EtO testing coordination
Location: AA-Room-Lab-221-TATDConfRoom/AA-OTAQ-LAB

Start: 11/6/2019 3:30:00 PM
End: 11/6/2019 4:00:00 PM
Show Time As: Busy

Required Attendees: Brusstar, Matt; Kolowich, Bruce; Imfeld, Sterling; Peralta, Maria; Loftis, Kathy; Bryson, James; Sun, Ruonan; Slater, Jonathan; Haugen, David

Agenda

ASD request to ORD for Enthalpy canisters and analysis for NVFEL testing and concurrent in-house EtO sampling:

NRSI testing

- 3 E10 6-mode tests and 1 steady state mode 3 test
- Flow study of canister flow proportionality
- 3 E0 6-mode tests and 1 steady state mode 3 test

LD E10 gasoline Vehicle Testing

- 3 FTP's, 3 USO6, all with pre/post catalyst EtO samples

HD Diesel Vehicle Testing

- 3 cold UDDS, 3 hot UDDS, all with pre/post aftertreatment EtO samples

Appointment

From: Loftis, Kathy [loftis.kathy@epa.gov]
Sent: 7/18/2019 12:56:09 PM
To: Loftis, Kathy [loftis.kathy@epa.gov]; Haugen, David [haugen.david@epa.gov]; Charmley, William [charmley.william@epa.gov]; Brusstar, Matt [brusstar.matt@epa.gov]; Kolowich, Bruce [kolowich.bruce@epa.gov]

Subject: GC-MS for EtO in Exhaust
Location: Lab 309

Start: 7/23/2019 4:00:00 PM
End: 7/23/2019 4:30:00 PM
Show Time As: Busy

Required Attendees: Haugen, David; Charmley, William; Brusstar, Matt; Kolowich, Bruce

At Tuesday's meeting, we gave a brief overview of concerns with using GC-MS for measuring ethylene oxide in exhaust, but did not go into the details. Our concerns encompass both qualitative and quantitative determinations. The concerns surrounding the implementation of GC-MS as an analytical tool for this scenario can be most effectively communicated through a demonstration. As such, I will be providing a demo. in the lab to illustrate some of the analytical details.

The attendees will be split into groups to accommodate space limitations and include:
Angela Cullen
Bill Charmley
Bruce Kolowich
Chris Laroo
David Haugen
Marion Hoyer
Matt Brusstar
Rich Cook

If I left folks out, please send me an email and I will include them.

Have a great day,
Kat

Kathy M. Loftis, PhD
Chemist, Fuels Chemistry Center
Testing and Advanced Technology Division
National Vehicle and Fuel Emissions Laboratory
US Environmental Protection Agency
Ph:734-214-4624
Fax: 734-214-4440
loftis.kathy@epa.gov

Message

From: Laroo, Chris [/O=EXCHANGELABS/OU=EXCHANGE ADMINISTRATIVE GROUP (FYDIBOHF23SPDLT)/CN=RECIPIENTS/CN=6F4E3F827D6648AE8F3A5DE78A5F4E16-LAROO, CHRIS]
Sent: 4/3/2019 3:00:25 PM
To: Shappley, Ned [Shappley.Ned@epa.gov]
Subject: VOC Follow-up

Ned,

I apologize for taking so long to get back to you. I was on travel last week and am still trying to get caught up. Yes, I am following the EtO work and I would be interested in method development for its measurement, as well as anything else you are working on. Let me know when you might have some time to talk.

Regards,

Chris Laroo
Environmental Protection Specialist
US Environmental Protection Agency
Office of Transportation and Air Quality
Assessment and Standards Division
2000 Traverwood Dr.
Ann Arbor, MI 48105
(734) 214-4937
(734) 214-4055 (fax)
Email: laroo.chris@epa.gov

Message

From: Laroo, Chris [/O=EXCHANGELABS/OU=EXCHANGE ADMINISTRATIVE GROUP (FYDIBOHF23SPDLT)/CN=RECIPIENTS/CN=6F4E3F827D6648AE8F3A5DE78A5F4E16-LAROO, CHRIS]
Sent: 7/22/2019 11:22:39 AM
To: Cook, Rich [Cook.Rich@epa.gov]
Subject: RE: Follow-up on NRMRL Calibration Standard and Sample Can Stability

Rich,

GC is similar except that you would change carrier gas flow rate and the column phase polarity to try and get better separation. It doesn't always work though in complex samples.

Regards,

Chris Laroo
Environmental Protection Specialist
US Environmental Protection Agency
Office of Transportation and Air Quality
Assessment and Standards Division
2000 Traverwood Dr.
Ann Arbor, MI 48105
(734) 214-4937
(734) 214-4055 (fax)
Email: laroo.chris@epa.gov

From: Cook, Rich
Sent: Wednesday, July 17, 2019 3:49 PM
To: Laroo, Chris <laroo.chris@epa.gov>
Subject: RE: Follow-up on NRMRL Calibration Standard and Sample Can Stability

I remember when I used to do HPLC analysis we would deal with interference by changing solvents around or flow rates or both. No experience with GC/MS.

Thanks.

Rich Cook
Health Effects, Benefits, and Air Toxics Center
Assessment and Standards Division
Office of Transportation and Air Quality
U. S. Environmental Protection Agency
(734)214-4827

From: Laroo, Chris
Sent: Wednesday, July 17, 2019 3:35 PM
To: Cook, Rich <Cook.Rich@epa.gov>; Hoyer, Marion <hoyer.marion@epa.gov>
Cc: Cullen, Angela <cullen.angela@epa.gov>; Walters, Charles <walters.charles@epa.gov>; Loftis, Kathy <loftis.kathy@epa.gov>; Fernandez, Antonio <fernandez.antonio@epa.gov>; Choi, David <Choi.David@epa.gov>; Olechiw, Michael <olechiw.michael@epa.gov>
Subject: RE: Follow-up on NRMRL Calibration Standard and Sample Can Stability

Rich,

In general yes. The positive bias from the humidity could also be a stability issue, stability for the entire sample matrix, where EtO could form (although I'm still surprised by this). So in general, stability concerns could be due target analyte formation or degradation in the sample matrix over a certain duration of time. Interferences are generally positive in nature and in gas chromatography are generally due to insufficient peak separation (co-elution). Using a mass spectrometer as a detector can remedy that to some extent if the target analyte will fragment in a pattern that generates and ion that is not similar to all of the ions generated from the co-eluting molecule (different fragmentation patterns should generate an uncommon fragmented ion for each specie). This would then allow you to quantitatively discern between the two species, whereas if you had a FID as a detector, you would have to solve the co-elution on the chromatograph end by finding a way to improve the separation of peaks.

Yes, your conclusion on the Enthalpy method is a fair assessment.

Regards,

Chris Laroo
Environmental Protection Specialist
US Environmental Protection Agency
Office of Transportation and Air Quality
Assessment and Standards Division
2000 Traverwood Dr.
Ann Arbor, MI 48105
(734) 214-4937
(734) 214-4055 (fax)
Email: laroo.chris@epa.gov

From: Cook, Rich
Sent: Wednesday, July 17, 2019 3:16 PM
To: Laroo, Chris <laroo.chris@epa.gov>; Hoyer, Marion <hoyer.marion@epa.gov>
Cc: Cullen, Angela <cullen.angela@epa.gov>; Walters, Charles <walters.charles@epa.gov>; Loftis, Kathy <loftis.kathy@epa.gov>; Fernandez, Antonio <fernandez.antonio@epa.gov>; Choi, David <Choi.David@epa.gov>; Olechiw, Michael <olechiw.michael@epa.gov>
Subject: RE: Follow-up on NRMRL Calibration Standard and Sample Can Stability

Just so the biologist understands –

Humidity could create a positive bias over time, which would mean overestimate. Stability concern would lead to underestimate over time. Interference could be either way, right?

Anyways, so in the end the Enthalpy methods may be giving reasonable results for combustion sources, but there are these potential concerns and we don't know until we try other approaches (such as the one she describes or the one being explored by TATD).

Do I have this right?

Rich Cook
Health Effects, Benefits, and Air Toxics Center
Assessment and Standards Division
Office of Transportation and Air Quality
U. S. Environmental Protection Agency
(734)214-4827

From: Laroo, Chris
Sent: Wednesday, July 17, 2019 2:30 PM
To: Hoyer, Marion <hoyer.marion@epa.gov>
Cc: Cullen, Angela <cullen.angela@epa.gov>; Walters, Charles <walters.charles@epa.gov>; Cook, Rich <Cook.Rich@epa.gov>; Loftis, Kathy <loftis.kathy@epa.gov>; Fernandez, Antonio <fernandez.antonio@epa.gov>; Choi, David <Choi.David@epa.gov>; Olechiw, Michael <olechiw.michael@epa.gov>
Subject: RE: Follow-up on NRMRL Calibration Standard and Sample Can Stability

I just got off the phone with Tiffany. I am less confused now and some of my confusion may have been from the call I missed about two weeks ago. Below is a summary of our discussion. This may be a repeat for some of you, if it was discussed on the call I missed.

The concern about stability for humid samples came from the Enthalpy work presented by Berkowitz. The concern is stability in humidity (humidity concentrations were not given by Berkowitz, but EtO concentrations tested were 40 ppt, 200 ppt, and 800 ppt) out past 25 days. There are large deviations (+25%) in the Berkowitz work for the 30 day measurements (positive bias over time for humid environment, negative for dry). I am not exactly sure what the water content of our dilute samples are, but I think that a ball park might be 90% of the dilute CO2 concentration, so from the F150 work, CO2 in Ph 1 is 4300 ppm equating to roughly 3900 ppm water. Stability could be a concern for dilute exhaust gas samples, but I need to track down what the water concentrations is from the Berkowitz work.

The calibration standard stability concern stemmed from work done by Doris Chen. She had a lab (either ERG or NIST) analyze two cylinders of EtO at 0, 30, and 60 days and showed a degradation of up to 20%. Tiffany is performing follow-up work with 12 to 16 cylinders of varying EtO concentrations to build on Doris' work.

Tiffany and others are confident in the analytical procedure developed by Enthalpy down to about 35 ppt for ambient EtO measurements as they feel that Enthalpy has addressed interference (co-elution) concerns (MeOH, trans-2-butene, acetaldehyde). They are still concerned, however, with the method as it applies to combustion sources. They feel that more work is needed to assess degradation in the cannister (although I would argue that the spiked cannisters that were then used to sample exhaust support stability) and determine if there are any other potential interferences from the complex exhaust hydrocarbon matrix.

Ultimately she would like to see multiple GC/MS instruments running the method and returning the same results for a given sample.

To get around sample stability concerns, her ultimate goal would be an on-line method. She is big on a cavity ring down analyzer that was modified from a methane analyzer by the manufacturer. This instrument has a DL of about 1 ppb for a 60s average of 1 Hz samples. She feels that the 1 ppb DL would be more than adequate for raw exhaust measurement (I did not bring up sampling proportionality concerns as that can be addressed after proving out the method). She plans to evaluate the analyzer in the near future and will pay particular attention to potential sources of interference.

That about sums it up. I have a better understanding of her concerns. I think that we can be confident that the hits we get on EtO from the NRMRL testing are real, but can only be considered qualitative at this time.

Regards,

Chris Laroo
Environmental Protection Specialist
US Environmental Protection Agency
Office of Transportation and Air Quality
Assessment and Standards Division
2000 Traverwood Dr.
Ann Arbor, MI 48105
(734) 214-4937

(734) 214-4055 (fax)
Email: laroo.chris@epa.gov

From: Hoyer, Marion
Sent: Wednesday, July 10, 2019 1:47 PM
To: Laroo, Chris <laroo.chris@epa.gov>
Cc: Cullen, Angela <cullen.angela@epa.gov>; Walters, Charles <walters.charles@epa.gov>; Cook, Rich <Cook.Rich@epa.gov>; Loftis, Kathy <loftis.kathy@epa.gov>; Fernandez, Antonio <fernandez.antonio@epa.gov>; Choi, David <Choi.David@epa.gov>; Olechiw, Michael <olechiw.michael@epa.gov>
Subject: RE: Follow-up on NRMRL Calibration Standard and Sample Can Stability

Thanks Chris for looking at what she sent.

Do you mind calling her to just have a one-on-one about this? I think you'd potentially learn more and it would put her less in a position of being expected to "know it all". I get the sense her concerns are broad in that she feels we are in a major learning phase with this compound. She and a couple of the engineers in OAQPS have been attending several conferences and meetings on EtO so I get the sense they are hearing quite a bit about a variety of approaches and experiences. It would be good to pick her brain ☺

From: Laroo, Chris
Sent: Wednesday, July 10, 2019 11:24 AM
To: Hoyer, Marion <hoyer.marion@epa.gov>
Cc: Cullen, Angela <cullen.angela@epa.gov>; Walters, Charles <walters.charles@epa.gov>; Cook, Rich <Cook.Rich@epa.gov>; Loftis, Kathy <loftis.kathy@epa.gov>; Fernandez, Antonio <fernandez.antonio@epa.gov>; Choi, David <Choi.David@epa.gov>; Olechiw, Michael <olechiw.michael@epa.gov>
Subject: Follow-up on NRMRL Calibration Standard and Sample Can Stability

Marion,

I am just following up on what Tiffany sent us following our Monday meeting on EtO. I am perplexed by NRMRL's concerns over the stability of EtO calibration standards and sample stability in the sample can. My understanding was that Tiffany was citing the presentation and abstract provided by Enthalpy to call into question the stability of the calibration standards and the sample in the can over time. I reviewed the documents she provided and I did not find anything from what Enthalpy presented that raised red flags. To the contrary, the Enthalpy work supported calibration standard stability as well as sample stability. So I guess I'm a little confused. It might be beneficial to have a discussion with Tiffany to figure out what specifically her concerns are.

Regards,

Chris Laroo
Environmental Protection Specialist
US Environmental Protection Agency
Office of Transportation and Air Quality
Assessment and Standards Division
2000 Traverwood Dr.
Ann Arbor, MI 48105
(734) 214-4937
(734) 214-4055 (fax)
Email: laroo.chris@epa.gov

Message

From: Walters, Charles [walters.charles@epa.gov]
Sent: 8/7/2019 3:11:11 PM
To: Schenk, Ruth [schenk.ruth@epa.gov]
CC: Loftis, Kathy [loftis.kathy@epa.gov]; Geeting, Michael [geeting.michael@epa.gov]; Antoszewski, William [antoszewski.william@epa.gov]; Wagner, Adam [wagner.adam@epa.gov]
Subject: RE: FRHR guidance

Ruth,

Thanks for the response. These are pilot tests; I will work with Kathy to amend 19-111 to include the 2 items below.

Chuck

-----Original Message-----
From: Schenk, Ruth <schenk.ruth@epa.gov>
Sent: Wednesday, August 07, 2019 10:19 AM
To: Walters, Charles <walters.charles@epa.gov>
Cc: Loftis, Kathy <loftis.kathy@epa.gov>; Geeting, Michael <geeting.michael@epa.gov>; Antoszewski, William <antoszewski.william@epa.gov>; Wagner, Adam <wagner.adam@epa.gov>
Subject: RE: FRHR guidance

Hi Chuck,

To confirm that we are aligned -- The original FRHR 19-111 was for a pilot test in Cold Test Facility as a temporary change. If what is being proposed in (1) and (2) below are a pilot test (e.g., temporary change) in NRSE, then yes an amendment is appropriate.

If the actions proposed in (1) and/or (2) are permanent changes to the process, a new FRHR is in order. And we will be able to use what has been learned in the pilot test and apply it to the permanent change.

Please let me know if I didn't answer your questions or there are additional questions. Thanks, Ruth

-----Original Message-----
From: Walters, Charles <walters.charles@epa.gov>
Sent: Tuesday, August 06, 2019 2:51 PM
To: Schenk, Ruth <schenk.ruth@epa.gov>
Cc: Loftis, Kathy <loftis.kathy@epa.gov>
Subject: FW: FRHR guidance

Hi Ruth,

I am looking for guidance on best course of action in navigating the FRHR process for work that is planned in the Fall in nonroad small engines.

(1) The attached FRHR needs to be expanded to include the same work in nonroad small engine testing. I assume that the FRHR amendment process is the correct course of action for this change. Is this assumption correct?

(2) Additionally, we plan to collect dilute exhaust samples in evacuated 6 liter canisters. The contents of the canisters will be the same as the dilute exhaust sampled with our sample bags and continuous dilute analyzer benches. Does this change warrant an FRHR? If so, should it be added to the amendment above? Or be separate FRHR?

Thanks for your help.

Chuck

-----Original Message-----
From: Loftis, Kathy <loftis.kathy@epa.gov>
Sent: Thursday, August 01, 2019 3:52 PM
To: Walters, Charles <walters.charles@epa.gov>
Cc: Kolowich, Bruce <kolowich.bruce@epa.gov>
Subject: Emailing: FRHR 19-111 EtO Emissions Monitoring.pdf

Chuck,

I've attached a copy of the FRHR for EtO testing in Cold Cell. I am happy to modify the document as needed once we have more information from Ruth/Carla/Bill.

Best,
Kat

Your message is ready to be sent with the following file or link attachments:

FRHR 19-111 EtO Emissions Monitoring.pdf

Note: To protect against computer viruses, e-mail programs may prevent sending or receiving certain types of file attachments. Check your e-mail security settings to determine how attachments are handled.

Dilute exhaust sampling for Ethylene Oxide using Summa Canister

The sample will be dilute exhaust from a gasoline or diesel engine/vehicle. The sample zone will be near the sample probes used by the existing dilute analyzer bench. Please refer to the attached picture showing a typical summa canister sample setup attached to a CVS. Samples will also be collected of the dilution air used during the test.

Testing is carried out as follows:

1) Select a new summa cannister and flow controller for testing and fill out the test vehicle, test type, test number, flow controller, and summa cannister number on the chain of custody sheet.

2) Remove the cap on the sample port on the summa cannister and on the downstream end of the flow controller and attach the sample flow controller to the canister 10 minutes prior to the start of the test leaving the upstream end capped.

3) Manually open and close the summa cannister valve to perform a combined vacuum and leak check. Record the vacuum value on the chain of custody sheet. Ensure that the vacuum level on the controller gauge is maintained for one minute.

4) Remove the cap from the upstream end of the controller and attach it to the sample line/probe 5 minutes prior to the start of the test.

5) The summa cannister valve is manually opened at the start of the test to begin sampling. The start of testing could be indicated by honking the vehicle's horn or by some other visual or audible means.

6) Close the summa cannister valve and record the vacuum level at the end of the test on the chain of custody form. The end of testing could be indicated by honking the vehicle's horn or by some other visual or audible means.

7) Cap the inlet to the summa cannister and both ends of the flow controller and return the summa cannister to its shipping box in preparation to send to the lab for analysis.

Message

From: Antoszewski, William [antoszewski.william@epa.gov]
Sent: 8/26/2019 3:04:40 PM
To: Loftis, Kathy [loftis.kathy@epa.gov]
CC: Walters, Charles [walters.charles@epa.gov]; AAFacilityFAQs [AAFacilityFAQs@epa.gov]
Subject: RE: Loftis_FRHR Fillable Short Form R1_EtO_v2.docx

Flag: Follow up

Kat – we're treating this as an amendment to FRHR 19-111. Dave Hall generated the amendment form; if you stop by Facilities, he can provide the form for your and Bruce's signature.

This is being done using similar processes (with the addition of the canister sampling) and similar control methods as what we previously approved. From what I can tell from previous emails, the intent is now to do testing in the CTF and the non-road, small engine cell. Please advise if you intent to test anywhere else. As long as the controls will be the same, I don't have any other concerns.

If you can get the signed amendment back to Dave, we can do the SQFM approvals at our staff meeting tomorrow morning (Tuesday). Thanks.

Bill Antoszewski, P.E.
Safety Engineer
U.S. EPA National Vehicle and Fuel Emissions Laboratory
2565 Plymouth Road, Ann Arbor, MI 48105
Phone: 734-214-4402

From: Loftis, Kathy <loftis.kathy@epa.gov>
Sent: Wednesday, August 21, 2019 7:36 PM
To: Antoszewski, William <antoszewski.william@epa.gov>; Ward, Carla <ward.carla@epa.gov>; Schenk, Ruth <schenk.ruth@epa.gov>
Cc: Walters, Charles <walters.charles@epa.gov>
Subject: Loftis_FRHR Fillable Short Form R1_EtO_v2.docx

Bill,

I had previously submitted an FRHR for ethylene oxide testing in cold cell. The work has since expanded and will need to include other test cells as well as different sample collection strategies (Suma cannister collections).

Chuck Walters contacted Ruth and enquired about how to best proceed with the FRHR given the new requirements. Based on the feedback, we are modifying the original FRHR and:

- expanding the original work scope to include areas outside of Cold Test
- adding canister sampling to the scope of the FRHR

I have attached the modified FRHR here.

Please advise on the next steps.

Many thanks,
Kat

Kathy M. Loftis, Ph.D.
Chemist, Fuels Chemistry Center
Testing and Advanced Technology Division
National Vehicle and Fuel Emissions Laboratory
US Environmental Protection Agency
Ph:734-214-4624
Fax: 734-214-4440
loftis.kathy@epa.gov

Message

From: Imfeld, Sterling [imfeld.sterling@epa.gov]
Sent: 9/5/2019 1:25:25 PM
To: Peralta, Maria [Peralta.Maria@epa.gov]; Loftis, Kathy [loftis.kathy@epa.gov]
Subject: RE: FRHR

Kathy, thanks for the well written and informative email. I am sure that I won't have any problem signing either. As Maria says let me know when you need me to sign.

If you could walk me through what you and the safety office have come up with for safety procedures I would appreciate being able to understand more fully the steps we are taking with this ~new item to keep everyone safe. I am sure they are appropriate and sufficient, this is not a review, but rather a chance for me to better understand this new testing and it's intricacies.

Thanks,
Sterling

From: Peralta, Maria <Peralta.Maria@epa.gov>
Sent: Thursday, September 05, 2019 9:17 AM
To: Loftis, Kathy <loftis.kathy@epa.gov>; Imfeld, Sterling <imfeld.sterling@epa.gov>
Subject: RE: FRHR

Looks good – I like the approach, let me know when you need me to sign.

Maria

Maria Peralta
Advanced Testing Center Director
U.S. Environmental Protection Agency
National Vehicle and Fuel Emissions Laboratory
2565 Plymouth Road
Ann Arbor, MI 48105
734.214.4301 Phone
734.214.4440 Fax
peralta.maria@epa.gov

From: Loftis, Kathy <loftis.kathy@epa.gov>
Sent: Wednesday, September 04, 2019 2:55 PM
To: Imfeld, Sterling <imfeld.sterling@epa.gov>; Peralta, Maria <Peralta.Maria@epa.gov>
Subject: FRHR

Sterling and Maria,

We had previously discussed future EtO testing in two (at present) test cells that you manage. At the moment, these are: cold cell and NRSI.

I submitted an FRHR because we will be using EtO personal monitors and portable "sniffers" to ensure we are not exposed to EtO during testing (specifically recovery tests wherein relatively high concentrations of EtO will be

introduced). This FRHR initially only covered testing in cold cell. As the scope of the EtO project evolved, the initial FRHR was amended to include cannister sampling in NRSI, since modifications to the existing sampling system were required. The amended FRHR used broad language so that individual sites were no longer specified. This amended FRHR would enable EtO personal monitoring and cannister sampling (using the specified cannister sampling protocol) in all sites.

As the EtO project continues to expand, our aim is to perform more vehicle/engine testing in-house. At present, however, we are focused on performing recovery testing in CTF and recovery testing and exhaust sampling in NRSI. These next steps, however, require your approval of the amended FRHR. Given the overarching language used in the FRHR, by approving testing in the two aforementioned sites, you are, in effect, also approving the FRHR for all test cells you each manage. This will serve to facilitate the process of expanding EtO testing into other cells as the project evolves. By signing this FRHR, you're not giving unrestricted access to your sites for EtO testing; this document simply serves to enable personal monitoring and cannister testing of exhaust. All testing will continue to be planned and coordinated with your teams, to ensure the least disruption to your regular, and on-going testing.

Please let me know if you have specific concerns or questions.

I am including a copy of the FRHR here, but this is not the copy that needs to be signed. Once you have read the FRHR, and are ready to sign, I will provide the copy to which all signatures are being added.

Thanks,
Kat

Kathy M. Loftis, Ph.D.
Chemist, Fuels Chemistry Center
Testing and Advanced Technology Division
National Vehicle and Fuel Emissions Laboratory
US Environmental Protection Agency
Ph:734-214-4624
Fax: 734-214-4440
loftis.kathy@epa.gov

Message

From: Imfeld, Sterling [imfeld.sterling@epa.gov]
Sent: 9/11/2019 2:23:27 PM
To: Loftis, Kathy [loftis.kathy@epa.gov]
Subject: RE: FRHR and EtO Sampling

Thanks Kathy, for the thorough and well written explanation. That is becoming a habit with you:) If you wouldn't mind to much I would still appreciate a walk through at this meeting time. I am in some ways a visual person even though I tend to also be loquacious.

-----Original Appointment-----
From: Loftis, Kathy <loftis.kathy@epa.gov>
Sent: Tuesday, September 10, 2019 8:04 PM
To: Loftis, Kathy; Imfeld, Sterling
Subject: FRHR and EtO Sampling
When: Wednesday, September 11, 2019 11:30 AM-12:00 PM (UTC-05:00) Eastern Time (US & Canada).
Where: TBD

Sterling,

I scheduled a short meeting to discuss the safety implementations for EtO sampling, in the event you would want to go over the EtO sampling details in person.

In the event an email will suffice, the safety protocols are as follow: ethylene oxide is only introduced to the system when performing a recovery sampling protocol; all other sampling only entails collecting exhaust and measuring *in situ* ethylene oxide concentrations. The recovery sampling protocol is performed in much the same way as the propane injection test. For this test, a gas cylinder of ethylene oxide (either 10 ppm or 1 %) will be connected with stainless steel tubing and compression fittings to a pipe and placed in-line before the dilution tunnel. Two introduction systems (pipe fittings) have been developed for this process.

The first system consists of a 6" flanged straight pipe. The 6" pipe is outfitted with a 0.25" tube that runs through the center of the pipe and terminates as a diffuser 1" above the flanged end of the pipe. The opposite end of the 0.25" tube will be connected to a gas cylinder with compression fittings. The flanged end of the 6" pipe will then be connected to the transfer line that leads to the dilution tunnel. The slight negative pressure of the transfer line will ensure the sample is drawn into the dilution tunnel and not into the test cell. The integrity of the system will be assessed using results from a propane injection before ethylene oxide is introduced. All compression fittings will be leak tested with an innocuous gas before connecting the bottle of ethylene oxide. I've attached a rough drawing to illustrate the sampling set-up.

The second system is similar to the first with the major difference being that a 45° pipe is used in lieu of a straight pipe. In this process, one end of the pipe is connected to the vehicle exhaust pipe and the other to the transfer line. The pipe is fitted with a 0.25" line and diffuser, as above, which allows for injection of ethylene oxide into exhaust stream.

A personal monitor and portable ethylene oxide detector will be used when ethylene oxide recovery sampling is performed to ensure personnel are not exposed. The monitors are equipped with alarms and have a sensitivity of 0.1 ppm, and are sensitive enough to monitor NIOSH exposure limits—the TWA REL defined by NIOSH is 0.1 ppm for 10 hours and the ceiling REL is 5 ppm for 10 minutes.

At present, the recovery sampling is only planned for cold cell and there is currently no plan to introduce ethylene oxide in small-engines test cell tunnels. As such, the only monitoring necessary in small engines is the standard monitoring units routinely employed. Should ethylene oxide injections be performed at a future date, the above safety measures will be employed.

Please let me know if this time works. If not, I can work out a better time.

Thanks for your assistance with this,

Kat

Message

From: Walters, Charles [walters.charles@epa.gov]
Sent: 11/19/2019 1:23:10 PM
To: Loftis, Kathy [loftis.kathy@epa.gov]
Subject: RE: EtO Testing Small Engines

Kathy,

Ok sounds good. Yes, you can coordinate with me on this. I will talk to Jon about these dates and get back to you.

No, I haven't heard anything from Enthalpy.

Chuck

From: Loftis, Kathy <loftis.kathy@epa.gov>
Sent: Monday, November 18, 2019 7:49 PM
To: Walters, Charles <walters.charles@epa.gov>
Subject: EtO Testing Small Engines

Chuck,

I've been working on getting the bag sampler ready for testing. This required a lot of method development on its own, separate from the analytical method development that I have been conducting. I have not yet received the bags that I will be using for testing, but should have them by the end of the week. I'd like to schedule an engine test for either 12/3/19 – 12/6/19, or 12/9/19 -12/12/19. I believe Sterling wanted me to coordinate with you instead of going directly to John. Did I understand that correctly? If so, would you please see if their schedule can accommodate any of those days? If I misunderstood, I'm happy to contact John directly.

Have you heard anything from Enthalpy? Do you have a better idea of when you will be receiving the cannisters?

Many thanks for your help,
Kat

Kathy M. Loftis, Ph.D.
Chemist, Fuels Chemistry Center
Testing and Advanced Technology Division
National Vehicle and Fuel Emissions Laboratory
US Environmental Protection Agency
Ph:734-214-4624
Fax: 734-214-4440
loftis.kathy@epa.gov

Message

From: Slater, Jonathan [Slater.Jonathan@epa.gov]
Sent: 12/10/2019 8:36:37 PM
To: Loftis, Kathy [loftis.kathy@epa.gov]; Schauer, Ethan [schauer.ethan@epa.gov]
CC: Imfeld, Sterling [imfeld.sterling@epa.gov]; Walters, Charles [walters.charles@epa.gov]
Subject: NRSI/EtO sampling automation - update

Kat/Ethan,

I've determined the relay module on the test stand is faulty and I have no spare relay connections like I thought. Unfortunately we don't have spares on hand and I'm sourcing replacements through GSA (roughly 30 day lead time), so we won't be able to automate sampling through LabView for a bit. If the Suma canisters arrive, we'll still be able to proceed with manual sampling as we practiced last week.

Thank you
Jon

Message

From: Gitipour, Ali [Gitipour.Ali@epa.gov]
Sent: 12/17/2019 3:56:44 PM
To: Loftis, Kathy (Kat) [loftis.kathy@epa.gov]
Subject: ETO discussion

Flag: Follow up

Hi Kathy,

I hope you are doing well! As you are aware I have recently began working on the ETO impinger method and think it would be very helpful if we could touch base and have a phone discussion sometime in the near future. Do you have any free time early next week?
Please let me know.

Thanks!

Ali

Ali Gitipour, Ph.D.
Federal Postdoctoral Researcher
US Environmental Protection Agency
Office of Research and Development
Center for Environmental Measurement and Modeling
Air Methods and Characterization Division
Combustion Sources Branch
109 T. W. Alexander Drive
Research Triangle Park, NC 27711 (E-331A)
919.541.5192 (office)
919.541.0554 (fax)

Message

From: Loftis, Kathy [/O=EXCHANGELABS/OU=EXCHANGE ADMINISTRATIVE GROUP (FYDIBOHF23SPDLT)/CN=RECIPIENTS/CN=6ADB5ED644534810BB9F559C66CC3701-LOFTIS, KAT]
Sent: 11/12/2019 4:14:31 PM
To: Brusstar, Matt [brusstar.matt@epa.gov]
Subject: RE: SLT one-pager on EtO

Sorry I was not able to respond sooner. I was out and didn't see the email in time.

From: Brusstar, Matt <brusstar.matt@epa.gov>
Sent: Thursday, November 7, 2019 9:49 AM
To: Kolowich, Bruce <kolowich.bruce@epa.gov>; Loftis, Kathy <loftis.kathy@epa.gov>; Walters, Charles <walters.charles@epa.gov>
Subject: SLT one-pager on EtO

Kat, Chuck, Bruce—

Below is a paragraph for a one-page briefing on EtO that's being prepared for the upcoming SLT retreat. Can you please give me any comments/suggested revisions you may have by COB today?

Thanks,
Matt

Mobile Source Evaluations

- In 2019, we conducted testing on two gasoline light-duty vehicles, one gasoline heavy-duty vehicle, and one diesel heavy-duty vehicle at ORD using EPA Method TO-15 (summa canisters). Many lessons have been learned, which are being used to improve the sampling and analysis methods throughout the testing.
- We have initiated a cross-divisional effort to conduct EtO measurements at NVFEL in 2020 FY.
  - We plan to test a nonroad gasoline engine, light-duty vehicle, and heavy-duty vehicle using the EPA Method TO-15, with a focus on improving the proportionality of the samples.
  - In parallel, we are developing a new test method, a NIOSH monitoring method, to measure EtO from exhaust. The following are two of the primary goals associated with the development of the NIOSH method.
    - Validation of the measurements of EtO emissions using two separate methods.
    - The NIOSH method of sampling and analysis of EtO emissions can be done at NVFEL and at a lower cost than the EPA Method TO-15 measurements.

Message

From: Antoszewski, William [antoszewski.william@epa.gov]
Sent: 7/16/2019 2:19:53 PM
To: Loftis, Kathy [loftis.kathy@epa.gov]
Subject: RE: SDS EtO

Thanks. For FCC, I have a signature block on the PR. Just let me know when you need it signed.

From: Loftis, Kathy
Sent: Tuesday, July 16, 2019 10:14 AM
To: Antoszewski, William <antoszewski.william@epa.gov>
Subject: SDS EtO

Bill,

We will need to order a small cylinder of 100 % ethylene oxide. I've included the SDS here.

Thanks,
Kat

Kathy M. Loftis
Chemist, Fuels Chemistry Center
Testing and Advanced Technology Division
National Vehicle and Fuel Emissions Laboratory
US Environmental Protection Agency
Ph:734-214-4624
Fax: 734-214-4440
loftis.kathy@epa.gov

Message

From: Bryson, James [bryson.james@epa.gov]
Sent: 5/23/2019 12:37:50 PM
To: Loftis, Kathy [loftis.kathy@epa.gov]
Subject: RE: Ethylene oxide testing

Kat—

I'm not sure what the aerosolizer is, but am glad to work with you on it.

Jim.

From: Loftis, Kathy
Sent: Wednesday, May 22, 2019 6:08 PM
To: Bryson, James <bryson.james@epa.gov>
Subject: Ethylene oxide testing

Jim,

When we do the ethylene oxide injection, will we be able to use the aerosolizer that is already in cold cell?

Thank you,
Kat

Kathy M. Loftis
Chemist, Fuels Chemistry Center
Testing and Advanced Technology Division
National Vehicle and Fuel Emissions Laboratory
US Environmental Protection Agency
Ph:734-214-4624
Fax: 734-214-4440
loftis.kathy@epa.gov

Message

From: Loftis, Kathy [/O=EXCHANGELABS/OU=EXCHANGE ADMINISTRATIVE GROUP (FYDIBOHF23SPDLT)/CN=RECIPIENTS/CN=6ADB5ED644534810BB9F559C66CC3701-LOFTIS, KAT]
Sent: 6/19/2019 7:55:07 PM
To: Hall, David [hall.david@epa.gov]
Subject: RE: FRHR 19-111 Work Approval

Thank you.

From: Hall, David
Sent: Wednesday, June 19, 2019 2:45 PM
To: Loftis, Kathy <loftis.kathy@epa.gov>; Antoszewski, William <antoszewski.william@epa.gov>; Wagner, Adam <wagner.adam@epa.gov>; Geeting, Michael <geeting.michael@epa.gov>; Schenk, Ruth <schenk.ruth@epa.gov>
Cc: Kolowich, Bruce <kolowich.bruce@epa.gov>
Subject: FRHR 19-111 Work Approval

Kathy,

SQFM has approved your work plan, you may begin implementing FRHR 19-111, EtO Monitoring.

Thank you,

SQFM

Message

From: Loftis, Kathy [/O=EXCHANGELABS/OU=EXCHANGE ADMINISTRATIVE GROUP (FYDIBOHF23SPDLT)/CN=RECIPIENTS/CN=6ADB5ED644534810BB9F559C66CC3701-LOFTIS, KAT]
Sent: 7/2/2019 7:29:41 PM
To: Antoszewski, William [antoszewski.william@epa.gov]
Subject: RE: Dosimetry and EtO

Bill,

Just a heads up. I am having issues with the monitor, which is delaying my testing. I will keep you posted, however, as we move forward.

Thanks,
Kat

From: Antoszewski, William
Sent: Thursday, June 27, 2019 2:18 PM
To: Loftis, Kathy <loftis.kathy@epa.gov>
Subject: Dosimetry and EtO

Kat – 2 items:

1. Were you going to pick up badges today or wait until Monday?
2. Can you let me know when you start the EtO testing? SQFM has a spreadsheet they use to track FRHR progress.

Thanks.

Bill Antoszewski, P.E.
Safety Engineer
U.S. EPA National Vehicle and Fuel Emissions Laboratory
2565 Plymouth Road, Ann Arbor, MI 48105
Phone: 734-214-4402

SIGMA-ALDRICH

sigma-aldrich.com

SAFETY DATA SHEET

Version 3.11
Revision Date 01/10/2018
Print Date 06/22/2019

1. PRODUCT AND COMPANY IDENTIFICATION

1.1 Product identifiers

Product name	:	Ethylene oxide
Product Number	:	387614
Brand	:	Aldrich
Index-No.	:	603-023-00-X
CAS-No.	:	75-21-8

1.2 Relevant identified uses of the substance or mixture and uses advised against

Identified uses	:	Laboratory chemicals, Synthesis of substances

1.3 Details of the supplier of the safety data sheet

Company	:	Sigma-Aldrich 3050 Spruce Street SAINT LOUIS MO 63103 USA
Telephone	:	+1 800-325-5832
Fax	:	+1 800-325-5052

1.4 Emergency telephone number

Emergency Phone #	:	+1-703-527-3887 (CHEMTREC)

2. HAZARDS IDENTIFICATION

2.1 Classification of the substance or mixture

GHS Classification in accordance with 29 CFR 1910 (OSHA HCS)
Flammable gases (Category 1), H220
Gases under pressure (Liquefied gas), H280
Acute toxicity, Inhalation (Category 3), H331
Skin irritation (Category 2), H315
Eye irritation (Category 2A), H319
Germ cell mutagenicity (Category 1B), H340
Carcinogenicity (Category 1B), H350
Specific target organ toxicity - single exposure (Category 3), Respiratory system, H335
Acute aquatic toxicity (Category 3), H402
Chronic aquatic toxicity (Category 3), H412

For the full text of the H-Statements mentioned in this Section, see Section 16.

2.2 GHS Label elements, including precautionary statements

Pictogram

Signal word Danger

Hazard statement(s)

H220	Extremely flammable gas.
H280	Contains gas under pressure; may explode if heated.
H315	Causes skin irritation.
H319	Causes serious eye irritation.
H331	Toxic if inhaled.

H335	May cause respiratory irritation.
H340	May cause genetic defects.
H350	May cause cancer.
H412	Harmful to aquatic life with long lasting effects.

Precautionary statement(s)

P201	Obtain special instructions before use.
P202	Do not handle until all safety precautions have been read and understood.
P210	Keep away from heat/sparks/open flames/hot surfaces. No smoking.
P261	Avoid breathing dust/ fume/ gas/ mist/ vapours/ spray.
P264	Wash skin thoroughly after handling.
P271	Use only outdoors or in a well-ventilated area.
P273	Avoid release to the environment.
P280	Wear protective gloves/ protective clothing/ eye protection/ face protection.
P302 + P352	IF ON SKIN: Wash with plenty of soap and water.
P304 + P340 + P311	IF INHALED: Remove person to fresh air and keep comfortable for breathing. Call a POISON CENTER/doctor.
P305 + P351 + P338	IF IN EYES: Rinse cautiously with water for several minutes. Remove contact lenses, if present and easy to do. Continue rinsing.
P308 + P313	IF exposed or concerned: Get medical advice/ attention.
P332 + P313	If skin irritation occurs: Get medical advice/ attention.
P337 + P313	If eye irritation persists: Get medical advice/ attention.
P362	Take off contaminated clothing and wash before reuse.
P377	Leaking gas fire: Do not extinguish, unless leak can be stopped safely.
P381	Eliminate all ignition sources if safe to do so.
P403 + P233	Store in a well-ventilated place. Keep container tightly closed.
P405	Store locked up.
P410 + P403	Protect from sunlight. Store in a well-ventilated place.
P501	Dispose of contents/ container to an approved waste disposal plant.

2.3 Hazards not otherwise classified (HNOC) or not covered by GHS - none

3. COMPOSITION/INFORMATION ON INGREDIENTS

3.1 Substances

Synonyms	:	Oxirane
Formula	:	C_2H_4O
Molecular weight	:	44.05 g/mol
CAS-No.	:	75-21-8
EC-No.	:	200-849-9
Index-No.	:	603-023-00-X
Registration number	:	01-2119432402-53-XXXX

Hazardous components

Component	Classification	Concentration
Ethylene oxide		
	Flam. Gas 1; Press. Gas Liquefied gas; Acute Tox. 3; Skin Irrit. 2; Eye Irrit. 2A; Muta. 1B; Carc. 1B; STOT SE 3; Aquatic Acute 3; Aquatic Chronic 3; H220, H280, H315, H319, H331, H335, H340, H350, H412	90 - 100 %

For the full text of the H-Statements mentioned in this Section, see Section 16.

4. FIRST AID MEASURES

4.1 Description of first aid measures

General advice
Consult a physician. Show this safety data sheet to the doctor in attendance.Move out of dangerous area.

If inhaled
If breathed in, move person into fresh air. If not breathing, give artificial respiration. Consult a physician.

In case of skin contact
Wash off with soap and plenty of water. Take victim immediately to hospital. Consult a physician.

In case of eye contact
Rinse thoroughly with plenty of water for at least 15 minutes and consult a physician.

If swallowed
Do NOT induce vomiting. Never give anything by mouth to an unconscious person. Rinse mouth with water. Consult a physician.

4.2 Most important symptoms and effects, both acute and delayed
The most important known symptoms and effects are described in the labelling (see section 2.2) and/or in section 11

4.3 Indication of any immediate medical attention and special treatment needed
No data available

5. FIREFIGHTING MEASURES

5.1 Extinguishing media

Suitable extinguishing media
Use water spray, alcohol-resistant foam, dry chemical or carbon dioxide.

5.2 Special hazards arising from the substance or mixture
No data available

5.3 Advice for firefighters
Wear self-contained breathing apparatus for firefighting if necessary.

5.4 Further information
Use water spray to cool unopened containers.

6. ACCIDENTAL RELEASE MEASURES

6.1 Personal precautions, protective equipment and emergency procedures
Wear respiratory protection. Avoid breathing vapours, mist or gas. Ensure adequate ventilation. Remove all sources of ignition. Evacuate personnel to safe areas. Beware of vapours accumulating to form explosive concentrations. Vapours can accumulate in low areas.
For personal protection see section 8.

6.2 Environmental precautions
Prevent further leakage or spillage if safe to do so. Do not let product enter drains. Discharge into the environment must be avoided.

6.3 Methods and materials for containment and cleaning up
No data available

6.4 Reference to other sections
For disposal see section 13.

7. HANDLING AND STORAGE

7.1 Precautions for safe handling
Avoid contact with skin and eyes. Avoid inhalation of vapour or mist.
Use explosion-proof equipment.Keep away from sources of ignition - No smoking.Take measures to prevent the build up of electrostatic charge.
For precautions see section 2.2.

7.2 Conditions for safe storage, including any incompatibilities
Keep container tightly closed in a dry and well-ventilated place.

Recommended storage temperature 2 - 8 °C
Storage class (TRGS 510): 2A: Gases

7.3 Specific end use(s)
Apart from the uses mentioned in section 1.2 no other specific uses are stipulated

8. EXPOSURE CONTROLS/PERSONAL PROTECTION

8.1 Control parameters

Components with workplace control parameters

Component	CAS-No.	Value	Control parameters	Basis
Ethylene oxide	75-21-8	TWA	1 ppm	USA. Occupational Exposure Limits (OSHA) - Table Z-1 Limits for Air Contaminants
		STEL	5 ppm	USA. Occupational Exposure Limits (OSHA) - Table Z-1 Limits for Air Contaminants
		TWA	1 ppm	USA. ACGIH Threshold Limit Values (TLV)
	Remarks	Central Nervous System impairment Cancer Suspected human carcinogen		
		TWA	1 ppm	USA. OSHA - TABLE Z-1 Limits for Air Contaminants - 1910.1000
		STEL	5 ppm	USA. OSHA - TABLE Z-1 Limits for Air Contaminants - 1910.1000
		Substance listed; for more information see OSHA document 1910.1047		
		See 1910.1047		
		C	5 ppm 9 mg/m3	USA. NIOSH Recommended Exposure Limits
		Potential Occupational Carcinogen See Appendix A 10 minute per day ceiling value		

8.2 Exposure controls

Appropriate engineering controls
Avoid contact with skin, eyes and clothing. Wash hands before breaks and immediately after handling the product.

Personal protective equipment

Eye/face protection
Face shield and safety glasses Use equipment for eye protection tested and approved under appropriate government standards such as NIOSH (US) or EN 166(EU).

Skin protection
Handle with gloves. Gloves must be inspected prior to use. Use proper glove removal technique (without touching glove's outer surface) to avoid skin contact with this product. Dispose of contaminated gloves after use in accordance with applicable laws and good laboratory practices. Wash and dry hands.

Splash contact
Material: butyl-rubber
Minimum layer thickness: 0.3 mm
Break through time: 10 min
Material tested:Butoject® (KCL 897 / Aldrich Z677647, Size M)

data source: KCL GmbH, D-36124 Eichenzell, phone +49 (0)6659 87300, e-mail sales@kcl.de, test method: EN374
If used in solution, or mixed with other substances, and under conditions which differ from EN 374, contact the supplier of the CE approved gloves. This recommendation is advisory only and must be evaluated by an

industrial hygienist and safety officer familiar with the specific situation of anticipated use by our customers. It should not be construed as offering an approval for any specific use scenario.

Body Protection
Complete suit protecting against chemicals, Flame retardant antistatic protective clothing., The type of protective equipment must be selected according to the concentration and amount of the dangerous substance at the specific workplace.

Respiratory protection
Where risk assessment shows air-purifying respirators are appropriate use a full-face respirator with multi-purpose combination (US) or type AXBEK (EN 14387) respirator cartridges as a backup to engineering controls. If the respirator is the sole means of protection, use a full-face supplied air respirator. Use respirators and components tested and approved under appropriate government standards such as NIOSH (US) or CEN (EU).

Control of environmental exposure
Prevent further leakage or spillage if safe to do so. Do not let product enter drains. Discharge into the environment must be avoided.

9. PHYSICAL AND CHEMICAL PROPERTIES

9.1 Information on basic physical and chemical properties

a)	Appearance	Form: Liquefied gas
b)	Odour	No data available
c)	Odour Threshold	No data available
d)	pH	7.0 at 20 °C (68 °F)
e)	Melting point/freezing point	Melting point/range: -111 °C (-168 °F) - lit.
f)	Initial boiling point and boiling range	10.7 °C (51.3 °F) - lit.
g)	Flash point	-20.0 °C (-4.0 °F) - closed cup
h)	Evaporation rate	No data available
i)	Flammability (solid, gas)	No data available
j)	Upper/lower flammability or explosive limits	Upper explosion limit: 99.9 %(V) Lower explosion limit: 3 %(V)
k)	Vapour pressure	1,440 hPa (1,080 mmHg) at 20 °C (68 °F) 2,080 hPa (1,560 mmHg) at 30 °C (86 °F) 3,950 hPa (2,963 mmHg) at 50 °C (122 °F)
l)	Vapour density	No data available
m)	Relative density	0.882 g/cm3 at 25 °C (77 °F)
n)	Water solubility	slightly soluble
o)	Partition coefficient: n-octanol/water	log Pow: 0.3
p)	Auto-ignition temperature	429.0 °C (804.2 °F)
q)	Decomposition temperature	No data available
r)	Viscosity	No data available
s)	Explosive properties	No data available
t)	Oxidizing properties	No data available

9.2 Other safety information
No data available

10. STABILITY AND REACTIVITY

10.1 Reactivity
No data available

10.2 Chemical stability
Stable under recommended storage conditions.

10.3 Possibility of hazardous reactions
No data available

10.4 Conditions to avoid
Heat, flames and sparks. Extremes of temperature and direct sunlight.

10.5 Incompatible materials
Alcohols, Alkali metals, Ammonia, Oxidizing agents, Chemically active metals, and its salts

10.6 Hazardous decomposition products
Hazardous decomposition products formed under fire conditions. - Carbon oxides
Other decomposition products - No data available
In the event of fire: see section 5

11. TOXICOLOGICAL INFORMATION

11.1 Information on toxicological effects

Acute toxicity
No data available

LC50 Inhalation - Rat - 4 h - 800 ppm
Remarks: Lungs, Thorax, or Respiration:Other changes. Liver:Other changes. Kidney, Ureter, Bladder:Other changes.

Dermal: No data available

No data available

Skin corrosion/irritation
No data available

Serious eye damage/eye irritation
Eyes - Rabbit
Result: Eye irritation - 6 h

Respiratory or skin sensitisation
No data available

Germ cell mutagenicity
In vivo tests showed mutagenic effects

Carcinogenicity

Possible human carcinogen

IARC:	1 - Group 1: Carcinogenic to humans (Ethylene oxide)
NTP:	Known - Known to be human carcinogen (Ethylene oxide)
OSHA:	OSHA specifically regulated carcinogen (Ethylene oxide)

Reproductive toxicity
No data available

No data available

Specific target organ toxicity - single exposure
Inhalation - May cause respiratory irritation.

Specific target organ toxicity - repeated exposure
No data available

Aspiration hazard
No data available

Additional Information
RTECS: KX2450000

burning sensation, Cough, wheezing, laryngitis, Shortness of breath, Headache, Nausea, Vomiting, Exposure to large amounts can cause:, Convulsions

12. ECOLOGICAL INFORMATION

12.1 Toxicity

Toxicity to fish	LC50 - Pimephales promelas (fathead minnow) - 84 mg/l - 96 h

12.2 Persistence and degradability
No data available

12.3 Bioaccumulative potential
No data available

12.4 Mobility in soil
No data available

12.5 Results of PBT and vPvB assessment
PBT/vPvB assessment not available as chemical safety assessment not required/not conducted

12.6 Other adverse effects
An environmental hazard cannot be excluded in the event of unprofessional handling or disposal.
Harmful to aquatic life.

13. DISPOSAL CONSIDERATIONS

13.1 Waste treatment methods

Product
Burn in a chemical incinerator equipped with an afterburner and scrubber but exert extra care in igniting as this material is highly flammable. Offer surplus and non-recyclable solutions to a licensed disposal company. Contact a licensed professional waste disposal service to dispose of this material.

Contaminated packaging
Dispose of as unused product.

14. TRANSPORT INFORMATION

DOT (US)
UN number: 1040 Class: 2.3 (2.1)
Proper shipping name: Ethylene oxide
Reportable Quantity (RQ): 10 lbs
Poison Inhalation Hazard: Hazard zone D

IMDG
UN number: 1040 Class: 2.3 (2.1) EMS-No: F-D, S-U
Proper shipping name: ETHYLENE OXIDE

IATA
UN number: 1040 Class: 2.3 (2.1)
Proper shipping name: Ethylene oxide
IATA Passenger: Not permitted for transport
IATA Cargo: Not permitted for transport

15. REGULATORY INFORMATION

SARA 302 Components
The following components are subject to reporting levels established by SARA Title III, Section 302:

	CAS-No.	Revision Date

Ethylene oxide	75-21-8	2008-11-03

SARA 313 Components

The following components are subject to reporting levels established by SARA Title III, Section 313:

	CAS-No.	Revision Date
Ethylene oxide	75-21-8	2008-11-03

SARA 311/312 Hazards

Fire Hazard, Sudden Release of Pressure Hazard, Acute Health Hazard, Chronic Health Hazard

Massachusetts Right To Know Components

	CAS-No.	Revision Date
Ethylene oxide	75-21-8	2008-11-03

Pennsylvania Right To Know Components

	CAS-No.	Revision Date
Ethylene oxide	75-21-8	2008-11-03

New Jersey Right To Know Components

	CAS-No.	Revision Date
Ethylene oxide	75-21-8	2008-11-03

California Prop. 65 Components

WARNING! This product contains a chemical known to the State of California to cause cancer. Ethylene oxide	CAS-No. 75-21-8	Revision Date 2009-02-01
WARNING: This product contains a chemical known to the State of California to cause birth defects or other reproductive harm. Ethylene oxide	CAS-No. 75-21-8	Revision Date 2009-02-01

16. OTHER INFORMATION

Full text of H-Statements referred to under sections 2 and 3.

Acute Tox.	Acute toxicity
Aquatic Acute	Acute aquatic toxicity
Aquatic Chronic	Chronic aquatic toxicity
Carc.	Carcinogenicity
Eye Irrit.	Eye irritation
Flam. Gas	Flammable gases
H220	Extremely flammable gas.
H280	Contains gas under pressure; may explode if heated.
H315	Causes skin irritation.
H319	Causes serious eye irritation.
H331	Toxic if inhaled.
H335	May cause respiratory irritation.
H340	May cause genetic defects.
H350	May cause cancer.
H402	Harmful to aquatic life.
H412	Harmful to aquatic life with long lasting effects.

HMIS Rating

Health hazard:	2
Chronic Health Hazard:	*
Flammability:	4
Physical Hazard	3

NFPA Rating

Health hazard:	3
Fire Hazard:	4
Reactivity Hazard:	0

Further information

Copyright 2016 Sigma-Aldrich Co. LLC. License granted to make unlimited paper copies for internal use only.
The above information is believed to be correct but does not purport to be all inclusive and shall be used only as a guide. The information in this document is based on the present state of our knowledge and is applicable to the product with regard to appropriate safety precautions. It does not represent any guarantee of the properties of the product. Sigma-Aldrich Corporation and its Affiliates shall not be held liable for any damage resulting from handling or from contact with the above product. See www.sigma-aldrich.com and/or the reverse side of invoice or packing slip for additional terms and conditions of sale.

Preparation Information

Sigma-Aldrich Corporation
Product Safety – Americas Region
1-800-521-8956

Version: 3.11 Revision Date: 01/10/2018 Print Date: 06/22/2019

Message

From: Loftis, Kathy [/O=EXCHANGELABS/OU=EXCHANGE ADMINISTRATIVE GROUP (FYDIBOHF23SPDLT)/CN=RECIPIENTS/CN=6ADB5ED644534810BB9F559C66CC3701-LOFTIS, KAT]
Sent: 8/21/2019 11:35:41 PM
To: Antoszewski, William [antoszewski.william@epa.gov]; Ward, Carla [ward.carla@epa.gov]; Schenk, Ruth [schenk.ruth@epa.gov]
CC: Walters, Charles [walters.charles@epa.gov]
Subject: Loftis_FRHR Fillable Short Form R1_EtO_v2.docx
Attachments: Loftis_FRHR Fillable Short Form R1_EtO_v2.docx

Bill,

I had previously submitted an FRHR for ethylene oxide testing in cold cell. The work has since expanded and will need to include other test cells as well as different sample collection strategies (Suma cannister collections).

Chuck Walters contacted Ruth and enquired about how to best proceed with the FRHR given the new requirements. Based on the feedback, we are modifying the original FRHR and:

- expanding the original work scope to include areas outside of Cold Test
- adding canister sampling to the scope of the FRHR

I have attached the modified FRHR here.

Please advise on the next steps.

Many thanks,
Kat

Kathy M. Loftis, Ph.D.
Chemist, Fuels Chemistry Center
Testing and Advanced Technology Division
National Vehicle and Fuel Emissions Laboratory
US Environmental Protection Agency
Ph:734-214-4624
Fax: 734-214-4440
loftis.kathy@epa.gov

Project: Enter Tracking Number

[DOCVARIABLE "FacModNumber" * MERGEFORMAT][DOCVARIABLE FacModNumber * MERGEFORMAT]

NVFEL Facility Request and Hazard Review (FRHR)

A. Tracking Information

(Completed by SQFMC after the form is submitted.)

Facility Request and Hazard Review Number	Enter Tracking Number
Date Received	Click to select date
Date Completed	Click to select date
Amendment	☐ No ☐ Yes

[Step 1 of Flow Chart – Management Definition of Project]

B. Project Information

(Complete Section B, then submit form in Pending FRHR inbox in Room 608.)

Requester		Kathy Loftis
Email		[HYPERLINK "mailto:Loftis.kathy@epa.gov"]
Phone		734-214-4624
Division/Center		TATD/FCC
Date Submitted		
Project Title		EtO Emissions Monitoring
Key Inputs:		Complete known Key Inputs below:
	Room or Area	*Note if any of the activities will be performed outside or at other facilities or locations.* Cold Cell
	Scope	*Note if new equipment, machinery, processes, or systems are being installed; existing equipment is being replaced, upgraded, or removed; what utilities are required.* Will be measuring ethylene oxide recovery using 10ppm or 1% EtO gas standard in vehicle and engine cells. Pressurized gas cylinder containing ethylene oxide will be connected in-line and ethylene oxide will be recovered in sampler where it will react to form a less-reactive product, which will subsequently be analyzed. This FRHR is being initiated because a portable EtO monitor will be used during sample collection. In addition to the recovery sampling, exhaust samples will be collected in Suma Cannisters. The sample will be dilute exhaust from a gasoline or diesel engine/vehicle. The sample zone will be near the sample probes used by the existing dilute analyzer bench. Please refer to the attached picture showing a typical summa canister sample setup attached to a CVS. Samples will also be collected of the dilution air used during the test. Testing is carried out as follows: 1) Select a new summa cannister and flow controller for testing and fill out the test vehicle, test type, test number, flow controller, and summa cannister number on the chain of custody sheet.

NVFEL Facility Request and Hazard Review (FRHR)

	2) Remove the cap on the sample port on the summa cannister and on the downstream end of the flow controller and attach the sample flow controller to the canister 10 minutes prior to the start of the test leaving the upstream end capped. 3) Manually open and close the summa cannister valve to perform a combined vacuum and leak check. Record the vacuum value on the chain of custody sheet. Ensure that the vacuum level on the controller gauge is maintained for one minute. 4) Remove the cap from the upstream end of the controller and attach it to the sample line/probe 5 minutes prior to the start of the test. 5) The summa cannister valve is manually opened at the start of the test to begin sampling. The start of testing could be indicated by honking the vehicle's horn or by some other visual or audible means. 6) Close the summa cannister valve and record the vacuum level at the end of the test on the chain of custody form. The end of testing could be indicated by honking the vehicle's horn or by some other visual or audible means. 7) Cap the inlet to the summa cannister and both ends of the flow controller and return the summa cannister to its shipping box in preparation to send to the lab for analysis. 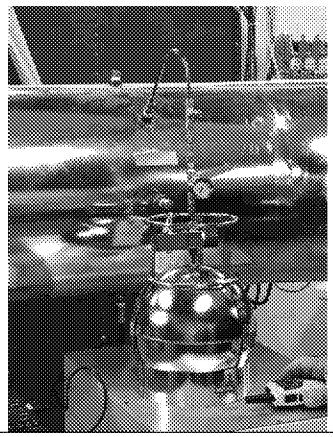
Contract Mechanism	NA
Funding/Budget	NA
POC Requester	Kathy M. Loftis
POC Facilities	Initially will be Facility Manager
POC Safety	Safety Officer

[DOCVARIABLE "FacModNumber" * MERGEFORMAT][DOCVARIABLE FacModNumber * MERGEFORMAT]

NVFEL Facility Request and Hazard Review (FRHR)

Deviations to Equipment Responsibility	☒ No ☐ Yes If Yes, describe deviations.
Estimated date by which modification or process needs to be implemented	*Allow adequate time for the FRHR process to be completed.* 10/1/2019
Is the modification or process permanent or temporary?	☐ Permanent ☒ Temporary and no longer required after TBD

Management Authorizes Project and Commits Resources

Requesting Center Director signature and date:	Area Center Director signature and date:

[DOCVARIABLE "FacModNumber" * MERGEFORMAT][DOCVARIABLE FacModNumber * MERGEFORMAT]

NVFEL Facility Request and Hazard Review (FRHR)
Short Form

[Steps 2 and 3 of Flow Chart – Initiate and Conduct Facility Request and Hazard Review Meetings]

C. Facility Request and Hazard Review Information

This section is to identify changes to the facility, potential hazards, and existing or proposed controls to mitigate the hazards. Attach extra sheets, drawings, etc., as needed.

1. Facility Changes

   Enter text. Note responsible party to perform work.

2. Clean Power (expand paragraph for entry fields by clicking on triangle in left margin)

3. Mezzanine Loading and Storage (expand paragraph for entry fields by clicking on triangle in left margin)

4. Hazards and Operational Controls

   Enter text. Note responsible party to perform work.

D. Approvals

[Step 4 of Flow Chart – Implementation Approval] Proposed changes are ready to be implemented	*[Step 6 of Flow Chart – Final Sign-off]* Tasks have been completed
Requester POC signature and date:	Requester POC signature and date:
Requesting Center Director signature and date:	Requesting Center Director signature and date:
Area Center Director signature and date:	Area Center Director signature and date:
Facility Manager signature and date:	Facility Manager signature and date:
Safety Officer signature and date:	Safety Officer signature and date:
Safety Supervisor signature and date:	Safety Supervisor signature and date:
Safety, Quality, and Facilities Management Center Director signature and date:	Safety, Quality, and Facilities Management Center Director signature and date:

[DOCVARIABLE "FacModNumber" * MERGEFORMAT][DOCVARIABLE FacModNumber * MERGEFORMAT]

NVFEL Facility Request and Hazard Review (FRHR)
Short Form

[DOCVARIABLE "FacModNumber" * MERGEFORMAT][DOCVARIABLE FacModNumber * MERGEFORMAT]

NVFEL Facility Request and Hazard Review (FRHR)

A. Tracking Information

(Completed by SQFMC after the form is submitted.)

Facility Request and Hazard Review Number	19-111 - Amendment
Date Received	8/26/2019
Date Completed	Click to select date
Amendment	☐ No ☒ Yes

[Step 1 of Flow Chart – Management Definition of Project]

B. Project Information

(Complete Section B, then submit form in Pending FRHR inbox in Room 608.)

Requester	Kathy Loftis
Email	[HYPERLINK "mailto:Loftis.kathy@epa.gov"]
Phone	734-214-4624
Division/Center	TATD/FCC
Date Submitted	
Project Title	EtO Emissions Monitoring
Key Inputs:	Complete known Key Inputs below:
Room or Area	*Note if any of the activities will be performed outside or at other facilities or locations.* Test Cells
Scope	*Note if new equipment, machinery, processes, or systems are being installed; existing equipment is being replaced, upgraded, or removed; what utilities are required.* We will be measuring ethylene oxide recovery using 10ppm or 1% EtO gas standards in test cells. A pressurized gas cylinder containing ethylene oxide will be connected in-line and ethylene oxide/exhaust will be recovered either using in-line sampling onto an adsorbent tube, or into a sample bag. This FRHR is being initiated because portable EtO monitors will be used during sample collection. The monitors serve to ensure worker exposure is below limits. In addition to the recovery sampling, exhaust samples will be collected in Suma Cannisters. The sample will be dilute exhaust from a gasoline or diesel engine/vehicle. The sample zone will be near the sample probes used by the existing dilute analyzer bench. Please refer to the attached picture showing a typical summa canister sample setup attached to a CVS. Samples will also be collected of the dilution air used during the test. Testing is carried out as follows: 1) Select a new summa cannister and flow controller for testing and fill out the test vehicle, test type, test number, flow controller, and summa cannister number on the chain of custody sheet.

NVFEL Facility Request and Hazard Review (FRHR)

	2) Remove the cap on the sample port on the summa cannister and on the downstream end of the flow controller and attach the sample flow controller to the canister 10 minutes prior to the start of the test leaving the upstream end capped. 3) Manually open and close the summa cannister valve to perform a combined vacuum and leak check. Record the vacuum value on the chain of custody sheet. Ensure that the vacuum level on the controller gauge is maintained for one minute. 4) Remove the cap from the upstream end of the controller and attach it to the sample line/probe 5 minutes prior to the start of the test. 5) The summa cannister valve is manually opened at the start of the test to begin sampling. The start of testing could be indicated by honking the vehicle's horn or by some other visual or audible means. 6) Close the summa cannister valve and record the vacuum level at the end of the test on the chain of custody form. The end of testing could be indicated by honking the vehicle's horn or by some other visual or audible means. 7) Cap the inlet to the summa cannister and both ends of the flow controller and return the summa cannister to its shipping box in preparation to send to the lab for analysis. 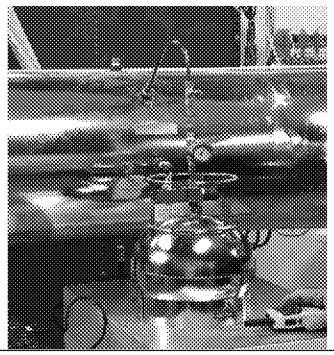
Contract Mechanism	NA
Funding/Budget	NA
POC Requester	Kathy M. Loftis
POC Facilities	Adam Wagner
POC Safety	Bill Antoszewski
Deviations to Equipment Responsibility	☒ No ☐ Yes If Yes, describe deviations.

[DOCVARIABLE "FacModNumber" * MERGEFORMAT][DOCVARIABLE FacModNumber * MERGEFORMAT]

NVFEL Facility Request and Hazard Review (FRHR)

Estimated date by which modification or process needs to be implemented	*Allow adequate time for the FRHR process to be completed.* 10/1/2019
Is the modification or process permanent or temporary?	☐ Permanent ☒ Temporary and no longer required after TBD

Management Authorizes Project and Commits Resources

Requesting Center Director signature and date:	Area Center Director signature and date:

[DOCVARIABLE "FacModNumber" * MERGEFORMAT][DOCVARIABLE FacModNumber * MERGEFORMAT]

NVFEL Facility Request and Hazard Review (FRHR)
Short Form

[Steps 2 and 3 of Flow Chart – Initiate and Conduct Facility Request and Hazard Review Meetings]

C. Facility Request and Hazard Review Information

This section is to identify changes to the facility, potential hazards, and existing or proposed controls to mitigate the hazards. Attach extra sheets, drawings, etc., as needed.

1. Facility Changes

   Enter text. Note responsible party to perform work.

2. Clean Power (expand paragraph for entry fields by clicking on triangle in left margin)

3. Mezzanine Loading and Storage (expand paragraph for entry fields by clicking on triangle in left margin)

4. Hazards and Operational Controls

   Enter text. Note responsible party to perform work.

D. Approvals

[Step 4 of Flow Chart – Implementation Approval] Proposed changes are ready to be implemented	*[Step 6 of Flow Chart – Final Sign-off]* Tasks have been completed
Requester POC signature and date:	Requester POC signature and date:
Requesting Center Director signature and date:	Requesting Center Director signature and date:
Area Center Director signature and date:	Area Center Director signature and date:
Facility Manager signature and date:	Facility Manager signature and date:
Safety Officer signature and date:	Safety Officer signature and date:
Safety Supervisor signature and date:	Safety Supervisor signature and date:
Safety, Quality, and Facilities Management Center Director signature and date:	Safety, Quality, and Facilities Management Center Director signature and date:

[DOCVARIABLE "FacModNumber" * MERGEFORMAT][DOCVARIABLE FacModNumber * MERGEFORMAT]

NVFEL Facility Request and Hazard Review (FRHR)
Short Form

Message

From: Loftis, Kathy [/O=EXCHANGELABS/OU=EXCHANGE ADMINISTRATIVE GROUP (FYDIBOHF23SPDLT)/CN=RECIPIENTS/CN=6ADB5ED644534810BB9F559C66CC3701-LOFTIS, KAT]
Sent: 10/17/2019 8:54:17 PM
To: Walters, Charles [walters.charles@epa.gov]
Subject: RE: follow-up info from our discussion

Chuck,

This is excellent! Thank you so much!

I really appreciate it.

And thank you for meeting with me yesterday. Your explanations were thorough and really helped me understand some concepts that were somewhat evasive before and filled in a lot of details that I had been scouring readings to find. It was incredibly helpful.

Hope you have a great evening,
Kat

From: Walters, Charles <walters.charles@epa.gov>
Sent: Thursday, October 17, 2019 1:51 PM
To: Loftis, Kathy <loftis.kathy@epa.gov>
Subject: follow-up info from our discussion

Kathy,

As a follow up to our conversation yesterday, below please find The EtO density that Chris Laroo and I are using. The 1066/1065 CFR references are also included.

Also below is the 1065/1066 CFR criteria for batch sample proportionality.

Attached, please find a document that shows an illustration of CVS sampling and some of the calculations used. This is an old document that references Part 86 so a few calculations have changed for 1065/1066. Specifically, DF is calculated slightly different for 1066, CVS flow very differently for 1065 engine testing, and 1065 now uses molar calculations to convert to mass (for engine testing). However, it is still a good reference to visualize CVS sampling. Also, in this document I included a vehicle speed/time trace of an FTP 3 bag test. This helps visualize the dynamic speed (and therefore exhaust flow) vs time and why proportionality with the CVS is important.

If you have any questions on anything, or if you would like to see some of this equipment in the lab, feel free to contact me.

Chuck

For EtO density, Chris and I are using 1831.32 g/m3. This value was calculated using the ideal gas law using the following inputs:

- 44.05256 as the EtO molecular weight and 8.314472 J/(mol K) for ideal gas constant per the tables in 1065.1005 that define R and molar mass.

- Also 1065/1066 define Standard Conditions as 293.15 K and 101.325 kPa per 1066.1001

Here is the 1065 language for verifying proportional flow.....

§1065.545 Verification of proportional flow control for batch sampling.

For any proportional batch sample such as a bag or PM filter, demonstrate that proportional sampling was maintained using one of the following, noting that you may omit up to 5% of the total number of data points as outliers:

(a) For any pair of flow rates, use recorded sample and total flow rates, where total flow rate means the raw exhaust flow rate for raw exhaust sampling and the dilute exhaust flow rate for CVS sampling, or their 1 Hz means with the statistical calculations in §1065.602. Determine the standard error of the estimate, SEE, of the sample flow rate versus the total flow rate. For each test interval, demonstrate that SEE was less than or equal to 3.5% of the mean sample flow rate.

(b) For any pair of flow rates, use recorded sample and total flow rates, where total flow rate means the raw exhaust flow rate for raw exhaust sampling and the dilute exhaust flow rate for CVS sampling, or their 1 Hz means to demonstrate that each flow rate was constant within ±2.5% of its respective mean or target flow rate. You may use the following options instead of recording the respective flow rate of each type of meter:

(1) Critical-flow venturi option. For critical-flow venturis, you may use recorded venturi-inlet conditions or their 1 Hz means. Demonstrate that the flow density at the venturi inlet was constant within ±2.5% of the mean or target density over each test interval. For a CVS critical-flow venturi, you may demonstrate this by showing that the absolute temperature at the venturi inlet was constant within ±4% of the mean or target absolute temperature over each test interval.

(2) Positive-displacement pump option. You may use recorded pump-inlet conditions or their 1 Hz means. Demonstrate that the flow density at the pump inlet was constant within ±2.5% of the mean or target density over each test interval. For a CVS pump, you may demonstrate this by showing that the absolute temperature at the pump inlet was constant within ±2% of the mean or target absolute temperature over each test interval.

(c) Using good engineering judgment, demonstrate with an engineering analysis that the proportional-flow control system inherently ensures proportional sampling under all circumstances expected during testing. For example, you might use CFVs for both sample flow and total dilute exhaust (CVS) flow and demonstrate that they always have the same inlet pressures and temperatures and that they always operate under critical-flow conditions.

Message

From: Loftis, Kathy [/O=EXCHANGELABS/OU=EXCHANGE ADMINISTRATIVE GROUP (FYDIBOHF23SPDLT)/CN=RECIPIENTS/CN=6ADB5ED644534810BB9F559C66CC3701-LOFTIS, KAT]
Sent: 12/4/2019 2:22:45 AM
To: Walters, Charles [walters.charles@epa.gov]
CC: Slater, Jonathan [Slater.Jonathan@epa.gov]
Subject: RE: EtO Testing Small Engines

Chuck,

Many thanks for the details. I wrapped things up late in the lab today and had not had an opportunity to check my mail or respond; my apologies. Meeting tomorrow at 9 sounds perfect. We can go over the protocol and logistics then.

Looking forward for the opportunity to work with you both.

Cheers,
Kat

From: Walters, Charles <walters.charles@epa.gov>
Sent: Tuesday, December 3, 2019 10:28 AM
To: Loftis, Kathy <loftis.kathy@epa.gov>
Cc: Slater, Jonathan <Slater.Jonathan@epa.gov>
Subject: RE: EtO Testing Small Engines

Kathy,

Let's meet down at small engines at 9:00am tomorrow to do the testing (let us know if this time works for you). Yes, we can meet beforehand to discuss logistics, just let me know when you want meet. We can discuss tomorrow morning before the testing or today if you like.

You can bring down your sampler this afternoon if you would like.

I will not be sampling canisters tomorrow as Enthalpy is not ready.

We will test canisters concurrent with your sampler once Enthalpy is ready; right now timing looks to be after the holidays.

Let me know if you need anything between now and 9:00 tomorrow.

Chuck

From: Loftis, Kathy <loftis.kathy@epa.gov>
Sent: Tuesday, December 03, 2019 9:23 AM
To: Walters, Charles <walters.charles@epa.gov>
Cc: Slater, Jonathan <Slater.Jonathan@epa.gov>
Subject: RE: EtO Testing Small Engines

Chuck and Jon, thank you both for all of your help with scheduling this testing. I'm looking forward to it. What time would you like to get started? Would you have time to meet beforehand (5 minutes) to review logistics? My set-up is quite mobile. I'd like to bring it by the test cell this afternoon and double-check that everything is secure, but I may wheel it back to the lab to tinker with it more, in which case, I would then wheel it over tomorrow before testing.

Chuck, will you be sampling also? I am trying to determine whether the testing on 12/4/2019 will be paired with your samples. If you will not be sampling tomorrow, I would like to re-test when you collect your samples, if possible.

Thanks,
Kat

From: Walters, Charles <walters.charles@epa.gov>
Sent: Wednesday, November 27, 2019 12:24 PM
To: Loftis, Kathy <loftis.kathy@epa.gov>
Cc: Slater, Jonathan <Slater.Jonathan@epa.gov>
Subject: RE: EtO Testing Small Engines

Kathy,

We are all set for December 4th, we ran a practice engine test yesterday and everything is ready.

If you would like, you can start setting up your equipment on Tuesday. Contact Jon or I if you would like to setup on Tuesday.

Thanks,
Chuck

From: Walters, Charles
Sent: Tuesday, November 19, 2019 10:53 AM
To: Loftis, Kathy <loftis.kathy@epa.gov>
Cc: Slater, Jonathan <Slater.Jonathan@epa.gov>
Subject: RE: EtO Testing Small Engines

Kathy,

Let's plan on Dec 4th.

Chuck

From: Loftis, Kathy <loftis.kathy@epa.gov>
Sent: Monday, November 18, 2019 7:49 PM
To: Walters, Charles <walters.charles@epa.gov>
Subject: EtO Testing Small Engines

Chuck,

I've been working on getting the bag sampler ready for testing. This required a lot of method development on its own, separate from the analytical method development that I have been conducting. I have not yet received the bags that I will be using for testing, but should have them by the end of the week. I'd like to schedule an engine test for either 12/3/19 – 12/6/19, or 12/9/19 -12/12/19. I believe Sterling wanted me to coordinate with you instead of going directly to John. Did I understand that correctly? If so, would you please see if their schedule can accommodate any of those days? If I misunderstood, I'm happy to contact John directly.

Have you heard anything from Enthalpy? Do you have a better idea of when you will be receiving the cannisters?

Many thanks for your help,

Kat

Kathy M. Loftis, Ph.D.
Chemist, Fuels Chemistry Center
Testing and Advanced Technology Division
National Vehicle and Fuel Emissions Laboratory
US Environmental Protection Agency
Ph:734-214-4624
Fax: 734-214-4440
loftis.kathy@epa.gov

Message

From: Loftis, Kathy (Kat) [/O=EXCHANGELABS/OU=EXCHANGE ADMINISTRATIVE GROUP (FYDIBOHF23SPDLT)/CN=RECIPIENTS/CN=6ADB5ED644534810BB9F559C66CC3701-LOFTIS, KAT]
Sent: 12/18/2019 5:29:23 PM
To: Brusstar, Matt [brusstar.matt@epa.gov]
Subject: RE: Lee's questions: EtO Tailpipe emissions question

Matt,

Thank you for the update.

-Kat

From: Brusstar, Matt <brusstar.matt@epa.gov>
Sent: Tuesday, December 17, 2019 8:50 AM
To: Kolowich, Bruce <kolowich.bruce@epa.gov>; Loftis, Kathy (Kat) <loftis.kathy@epa.gov>; Walters, Charles <walters.charles@epa.gov>
Cc: Haugen, David <haugen.david@epa.gov>
Subject: FW: Lee's questions: EtO Tailpipe emissions question

I've highlighted a few items below...yesterday, ASD was asked to put together a few talking points for the Administrator on EtO, as he was meeting with stakeholders in Illinois. Essentially, Bill decided to communicate a less-aggressive timeline for us to produce answers ("mid- to late-2020").
Matt

From: Cullen, Angela <cullen.angela@epa.gov>
Sent: Monday, December 16, 2019 4:52 PM
To: Brusstar, Matt <brusstar.matt@epa.gov>; Sargeant, Kathryn <sargeant.kathryn@epa.gov>
Cc: Charmley, William <charmley.william@epa.gov>
Subject: RE: Lee's questions: EtO Tailpipe emissions question

Bill and I just discussed that since there is not a push here, we should extend the timing to "mid- to late-2020" to be safe.

From: Brusstar, Matt <brusstar.matt@epa.gov>
Sent: Monday, December 16, 2019 4:49 PM
To: Sargeant, Kathryn <sargeant.kathryn@epa.gov>; Cullen, Angela <cullen.angela@epa.gov>
Cc: Charmley, William <charmley.william@epa.gov>
Subject: RE: Lee's questions: EtO Tailpipe emissions question

Kathryn,
The bullet points accurately characterize the project status from our perspective. Also, our planning with Angela and the team seems consistent with the timeline mentioned below.
Matt

From: Sargeant, Kathryn <sargeant.kathryn@epa.gov>
Sent: Monday, December 16, 2019 4:09 PM
To: Cullen, Angela <cullen.angela@epa.gov>; Brusstar, Matt <brusstar.matt@epa.gov>
Cc: Charmley, William <charmley.william@epa.gov>
Subject: Lee's questions: EtO Tailpipe emissions question

See below...any reactions?

From: Cook, Leila <cook.leila@epa.gov>
Sent: Monday, December 16, 2019 4:07 PM
To: Charmley, William <charmley.william@epa.gov>; Hengst, Benjamin <Hengst.Benjamin@epa.gov>
Cc: Dunham, Sarah <Dunham.Sarah@epa.gov>; Burch, Julia <Burch.Julia@epa.gov>; Sargeant, Kathryn <sargeant.kathryn@epa.gov>
Subject: RE: EtO Tailpipe emissions question

Bill,
Please for give me if these observations are off but the absence of a reference to OAQPS seems odd? Also the likelihood of having established methods and assessments of contributions in mid CY 2020 seems aggressive give the state of our knowledge currently. Any thoughts about both observations?

Lee

From: Charmley, William <charmley.william@epa.gov>
Sent: Monday, December 16, 2019 3:58 PM
To: Hengst, Benjamin <Hengst.Benjamin@epa.gov>
Cc: Dunham, Sarah <Dunham.Sarah@epa.gov>; Burch, Julia <Burch.Julia@epa.gov>; Cook, Leila <cook.leila@epa.gov>; Sargeant, Kathryn <sargeant.kathryn@epa.gov>
Subject: RE: EtO Tailpipe emissions question

Ben –

Here are a set of bullet points which can be used for the Administrator as background for his meeting for Wednesday of this week with the Illinois delegation.

If these look okay, do you want to send them back to Preston?
Thanks
Bill

3. Regarding **Mobile Sources** - EPA experts in the Office of Research and Development (ORD) and at the OAR National Vehicle and Fuel Emissions Laboratory in Ann Arbor are working to develop test methods that will allow EPA to carefully evaluate combustion sources, including mobile sources, to determine the extent to which ethylene oxide may be emitted.

- We are actively testing emissions from mobile source engines and vehicles, but until the test methods are established, we will not have reliable data to assess the amount of EtO that may be contributed from mobile sources.
- Methods may require different and new approaches compared with ambient air measurements due to the complex composition and large variation of emissions from mobile sources.
- We anticipate EPA may be able to begin to answer specific questions regarding the potential for mobile sources to contribute to ambient levels of EtO by mid-2020.

From: Hengst, Benjamin <Hengst.Benjamin@epa.gov>
Sent: Monday, December 16, 2019 12:07 PM
To: Charmley, William <charmley.william@epa.gov>; Sargeant, Kathryn <sargeant.kathryn@epa.gov>
Cc: Dunham, Sarah <Dunham.Sarah@epa.gov>; Burch, Julia <Burch.Julia@epa.gov>; Cook, Leila <cook.leila@epa.gov>
Subject: Fwd: EtO Tailpipe emissions question

Bill, Kathryn—please see below and let me know what you think. Thanks. Ben

Begin forwarded message:

From: "Cory, Preston" <Cory.Preston@epa.gov>
Date: December 16, 2019 at 12:03:48 PM EST
To: "Hengst, Benjamin" <Hengst.Benjamin@epa.gov>
Cc: "Burch, Julia" <Burch.Julia@epa.gov>, "Mroz, Jessica" <mroz.jessica@epa.gov>
Subject: EtO Tailpipe emissions question

Hi Ben,

I am wondering who in OTAC could provide info on any action OTAC is taking to address EtO. The Administrator has a meeting on Wednesday with the Illinois delegation, and he asked me to track down any action y'all are taking to address EtO tailpipe emissions, etc. Who is the best person on your team to provide this information? If he or she could fill in a few bullets on the higlighed portion below, that would be terrific! Tight timeline here...will need by COB if at all possible.

STATUS OF EPA'S WORK ON ETO:

OAR Immediate Office:

EPA is taking a **two-pronged approach** to address ethylene oxide emissions, including reviewing Clean Air Act regulations for industrial facilities that emit ethylene oxide:

1. On **November 1st**, the agency issued proposed amendments to its air toxics emissions standards for miscellaneous organic chemical manufacturing (often referred to as the MON).
   - The proposed amendments would reduce ethylene oxide emissions from this source category by approximately 10 tons per year.
   - The proposal is scheduled to publish in the Federal Register on **December 17th**.
   - Two public hearings are currently scheduled: the first on January 14th in Houston, TX and the second on January 16th in Washington, DC.

2. On **December 5th** the agency issued an Advance Notice of Proposed Rulemaking (ANPRM) to solicit information from industry and the public on a potential future rulemaking to further reduce EtO from commercial sterilization and fumigation operations.
   - In conjunction with the ANPRM the agency also solicited nominations for representatives for small entities that may be subject to a future rulemaking to advise a Small Business Advocacy Review Panel.
   - And, on December 10th, we issued a request for information under CAA section 114 to gather information from several commercial sterilization companies on facility characteristics, control devices, work practices and costs for emission reductions.
   - EPA hopes to finalize this rulemaking by in **spring 2020**: note that this timeline allows for EPA to gather a comprehensive data set that will ensure our rulemaking is defensible and allow for compliance with new control technology. We are issuing an ANPRM instead of an NPRM because we lack sufficient data collection to issue an NPRM at this time.

OAR OTAC:

ORD:

Thank you!
Preston

Appointment

From: Loftis, Kathy [/O=EXCHANGELABS/OU=EXCHANGE ADMINISTRATIVE GROUP (FYDIBOHF23SPDLT)/CN=RECIPIENTS/CN=6ADB5ED644534810BB9F559C66CC3701-LOFTIS, KAT]
Sent: 4/11/2019 11:23:08 AM
To: Ward, Carla [ward.carla@epa.gov]; Antoszewski, William [antoszewski.william@epa.gov]
BCC: AA-Room-Lab-601A-ConfRoom/AA-OTAQ-LAB [AA-Room-Lab-601A-ConfRoom@epa.gov]

Subject: Discuss FRHR and Film Badges
Location: AA-Room-Lab-601A-ConfRoom/AA-OTAQ-LAB

Start: 4/16/2019 3:00:00 PM
End: 4/16/2019 4:00:00 PM
Show Time As: Tentative

Required Attendees: Ward, Carla; Antoszewski, William

Carla and Bill,

I have scheduled this appointment so we can go over the details of the film badges, and so we can discuss the FRHR. The FRHR is regarding testing of ethylene oxide in the cold cell, for which I requested a personal monitor. I was told I would need to fill out an FRHR, and have started the paperwork on that, but need some guidance regarding the order of operations and logistics.

Please let me know if this day/time work for you.

Thanks,
Kat Loftis

Message

From: Loftis, Kathy [/O=EXCHANGELABS/OU=EXCHANGE ADMINISTRATIVE GROUP (FYDIBOHF23SPDLT)/CN=RECIPIENTS/CN=6ADB5ED644534810BB9F559C66CC3701-LOFTIS, KAT]
Sent: 4/16/2019 4:07:39 PM
To: Antoszewski, William [antoszewski.william@epa.gov]
Subject: SDS EtO
Attachments: EtO_SDS.pdf

Bill,

I was having a difficult time finding the correct SDS for the Ethylene Oxide standards we purchased. I have yet to receive the SDS from Air Liquide, but I found one that meets our needs. It covers the range of standards I have ordered.

Please do let me know if this is insufficient, however. Hopefully it will suffice.

Thanks,
Kat

Kathy M. Loftis
Chemist, Fuel Chemistry Center
Testing and Advanced Technology Division
National Vehicle and Fuel Emissions Laboratory
US Environmental Protection Agency
Ph:734-214-4624
Fax: 734-214-4440
loftis.kathy@epa.gov

Message

From: Loftis, Kathy [/O=EXCHANGELABS/OU=EXCHANGE ADMINISTRATIVE GROUP (FYDIBOHF23SPDLT)/CN=RECIPIENTS/CN=6ADB5ED644534810BB9F559C66CC3701-LOFTIS, KAT]
Sent: 6/11/2019 12:11:51 PM
To: Antoszewski, William [antoszewski.william@epa.gov]
Subject: Signed FRHR
Attachments: FRHR 19-111 EtO Emissions Monitoring.pdf

Bill,

Attached is the signed FRHR. Please let me know if this does not meet requirements.

Thank you,
Kat

Kathy M. Loftis
Chemist, Fuels Chemistry Center
Testing and Advanced Technology Division
National Vehicle and Fuel Emissions Laboratory
US Environmental Protection Agency
Ph:734-214-4624
Fax: 734-214-4440
loftis.kathy@epa.gov

Message

From: Walters, Charles [walters.charles@epa.gov]
Sent: 10/17/2019 5:50:46 PM
To: Loftis, Kathy [loftis.kathy@epa.gov]
Subject: follow-up info from our discussion
Attachments: CVS&FTP3bag.pdf

Flag: Follow up

Kathy,

As a follow up to our conversation yesterday, below please find The EtO density that Chris Laroo and I are using. The 1066/1065 CFR references are also included.

Also below is the 1065/1066 CFR criteria for batch sample proportionality.

Attached, please find a document that shows an illustration of CVS sampling and some of the calculations used. This is an old document that references Part 86 so a few calculations have changed for 1065/1066. Specifically, DF is calculated slightly different for 1066, CVS flow very differently for 1065 engine testing, and 1065 now uses molar calculations to convert to mass (for engine testing). However, it is still a good reference to visualize CVS sampling. Also, in this document I included a vehicle speed/time trace of an FTP 3 bag test. This helps visualize the dynamic speed (and therefore exhaust flow) vs time and why proportionality with the CVS is important.

If you have any questions on anything, or if you would like to see some of this equipment in the lab, feel free to contact me.

Chuck

For EtO density, Chris and I are using 1831.32 g/m3. This value was calculated using the ideal gas law using the following inputs:

- 44.05256 as the EtO molecular weight and 8.314472 J/(mol K) for ideal gas constant per the tables in 1065.1005 that define R and molar mass.

- Also 1065/1066 define Standard Conditions as 293.15 K and 101.325 kPa per 1066.1001

Here is the 1065 language for verifying proportional flow.....

§1065.545 Verification of proportional flow control for batch sampling.

For any proportional batch sample such as a bag or PM filter, demonstrate that proportional sampling was maintained using one of the following, noting that you may omit up to 5% of the total number of data points as outliers:

(a) For any pair of flow rates, use recorded sample and total flow rates, where total flow rate means the raw exhaust flow rate for raw exhaust sampling and the dilute exhaust flow rate for CVS sampling, or their 1 Hz means with the statistical calculations in §1065.602. Determine the standard error of the estimate, SEE, of the sample flow rate versus the total flow rate. For each test interval, demonstrate that SEE was less than or equal to 3.5% of the mean sample flow rate.

(b) For any pair of flow rates, use recorded sample and total flow rates, where total flow rate means the raw exhaust flow rate for raw exhaust sampling and the dilute exhaust flow rate for CVS sampling, or their 1 Hz means to demonstrate that each flow rate was constant within ±2.5% of its respective mean or target flow rate. You may use the following options instead of recording the respective flow rate of each type of meter:

(1) Critical-flow venturi option. For critical-flow venturis, you may use recorded venturi-inlet conditions or their 1 Hz means. Demonstrate that the flow density at the venturi inlet was constant within ±2.5% of the mean or target density over each test interval. For a CVS critical-flow venturi, you may demonstrate this by showing that the absolute temperature at the venturi inlet was constant within ±4% of the mean or target absolute temperature over each test interval.

(2) Positive-displacement pump option. You may use recorded pump-inlet conditions or their 1 Hz means. Demonstrate that the flow density at the pump inlet was constant within ±2.5% of the mean or target density over each test interval. For a CVS pump, you may demonstrate this by showing that the absolute temperature at the pump inlet was constant within ±2% of the mean or target absolute temperature over each test interval.

(c) Using good engineering judgment, demonstrate with an engineering analysis that the proportional-flow control system inherently ensures proportional sampling under all circumstances expected during testing. For example, you might use CFVs for both sample flow and total dilute exhaust (CVS) flow and demonstrate that they always have the same inlet pressures and temperatures and that they always operate under critical-flow conditions.

Appointment

From: Walters, Charles [walters.charles@epa.gov]
Sent: 10/1/2019 11:51:30 AM
To: Walters, Charles [walters.charles@epa.gov]; Brusstar, Matt [brusstar.matt@epa.gov]; Kolowich, Bruce [kolowich.bruce@epa.gov]; Imfeld, Sterling [imfeld.sterling@epa.gov]; Peralta, Maria [Peralta.Maria@epa.gov]; Loftis, Kathy [loftis.kathy@epa.gov]; Bryson, James [bryson.james@epa.gov]; Sun, Ruonan [sun.ruonan@epa.gov]; Slater, Jonathan [Slater.Jonathan@epa.gov]; Haugen, David [haugen.david@epa.gov]

Subject: EtO Testing Coordination
Location: AA-Room-Lab-221-TATDConfRoom/AA-OTAQ-LAB

Start: 10/3/2019 8:00:00 PM
End: 10/3/2019 8:30:00 PM
Show Time As: Busy

Required Attendees: Brusstar, Matt; Kolowich, Bruce; Imfeld, Sterling; Peralta, Maria; Loftis, Kathy; Bryson, James; Sun, Ruonan; Slater, Jonathan; Haugen, David

Agenda:

Discuss EtO testing in small engines: 1st week in November

- Flow tests of Enthalpy canisters and controllers
- Canister samples sent to Enthalpy for analysis
- In house method

Appointment

From: Walters, Charles [walters.charles@epa.gov]
Sent: 10/31/2019 4:43:27 PM
To: Walters, Charles [walters.charles@epa.gov]; Brusstar, Matt [brusstar.matt@epa.gov]; Kolowich, Bruce [kolowich.bruce@epa.gov]; Imfeld, Sterling [imfeld.sterling@epa.gov]; Peralta, Maria [Peralta.Maria@epa.gov]; Loftis, Kathy [loftis.kathy@epa.gov]; Bryson, James [bryson.james@epa.gov]; Sun, Ruonan [sun.ruonan@epa.gov]; Slater, Jonathan [Slater.Jonathan@epa.gov]; Haugen, David [haugen.david@epa.gov]

Subject: EtO testing coordination
Location: AA-Room-Lab-221-TATDConfRoom/AA-OTAQ-LAB

Start: 11/6/2019 3:30:00 PM
End: 11/6/2019 4:00:00 PM
Show Time As: Busy

Required Attendees: Brusstar, Matt; Kolowich, Bruce; Imfeld, Sterling; Peralta, Maria; Loftis, Kathy; Bryson, James; Sun, Ruonan; Slater, Jonathan; Haugen, David

Agenda

ASD request to ORD for Enthalpy canisters and analysis for NVFEL testing and concurrent in-house EtO sampling:

NRSI testing

- 3 E10 6-mode tests and 1 steady state mode 3 test
- Flow study of canister flow proportionality
- 3 E0 6-mode tests and 1 steady state mode 3 test

LD E10 gasoline Vehicle Testing

- 3 FTP's, 3 USO6, all with pre/post catalyst EtO samples

HD Diesel Vehicle Testing

- 3 cold UDDS, 3 hot UDDS, all with pre/post aftertreatment EtO samples

Appointment

From: Antoszewski, William [antoszewski.william@epa.gov]
Sent: 5/29/2019 1:12:56 PM
To: Antoszewski, William [antoszewski.william@epa.gov]; Loftis, Kathy [loftis.kathy@epa.gov]; Wagner, Adam [wagner.adam@epa.gov]

Subject: FRHR 19-111 - EtO Emissions Testing
Location: AA-Room-Lab-601A-ConfRoom/AA-OTAQ-LAB

Start: 5/30/2019 3:30:00 PM
End: 5/30/2019 4:00:00 PM
Show Time As: Busy

Required Attendees: Loftis, Kathy; Wagner, Adam

Kat – we need to have a quick meeting to review the FRHR with Facilities. I'm trying to tuck this meeting in yet this week. If this is a bad time, looks like it would be next Tuesday. Thanks.

Appointment

Sent: 4/10/2019 8:12:35 PM
To: Loftis, Kathy [loftis.kathy@epa.gov]; Ward, Carla [ward.carla@epa.gov]
BCC: AA-Room-Lab-601A-ConfRoom/AA-OTAQ-LAB [AA-Room-Lab-601A-ConfRoom@epa.gov]

Subject: Meeting to Discuss FRHR for Ethylene Oxide Recovery
Location: AA-Room-Lab-601A-ConfRoom/AA-OTAQ-LAB

Start: 4/16/2019 3:00:00 PM
End: 4/16/2019 4:00:00 PM
Show Time As: Busy

Message

From: Loftis, Kathy [/O=EXCHANGELABS/OU=EXCHANGE ADMINISTRATIVE GROUP (FYDIBOHF23SPDLT)/CN=RECIPIENTS/CN=6ADB5ED644534810BB9F559C66CC3701-LOFTIS, KAT]
Sent: 11/19/2019 12:49:28 AM
To: Walters, Charles [walters.charles@epa.gov]
Subject: EtO Testing Small Engines

Chuck,

I've been working on getting the bag sampler ready for testing. This required a lot of method development on its own, separate from the analytical method development that I have been conducting. I have not yet received the bags that I will be using for testing, but should have them by the end of the week. I'd like to schedule an engine test for either 12/3/19 – 12/6/19, or 12/9/19 -12/12/19. I believe Sterling wanted me to coordinate with you instead of going directly to John. Did I understand that correctly? If so, would you please see if their schedule can accommodate any of those days? If I misunderstood, I'm happy to contact John directly.

Have you heard anything from Enthalpy? Do you have a better idea of when you will be receiving the cannisters?

Many thanks for your help,
Kat

Kathy M. Loftis, Ph.D.
Chemist, Fuels Chemistry Center
Testing and Advanced Technology Division
National Vehicle and Fuel Emissions Laboratory
US Environmental Protection Agency
Ph:734-214-4624
Fax: 734-214-4440
loftis.kathy@epa.gov

Appointment

From: Charmley, William [charmley.william@epa.gov]
Sent: 10/28/2019 12:57:34 PM
To: Charmley, William [charmley.william@epa.gov]; Hoyer, Marion [hoyer.marion@epa.gov]; Sargeant, Kathryn [sargeant.kathryn@epa.gov]; Olechiw, Michael [olechiw.michael@epa.gov]; Nelson, Brian [nelson.brian@epa.gov]; Cullen, Angela [Cullen.Angela@epa.gov]; Brusstar, Matt [brusstar.matt@epa.gov]; Walters, Charles [walters.charles@epa.gov]; Kolowich, Bruce [Kolowich.Bruce@epa.gov]; Fernandez, Antonio [fernandez.antonio@epa.gov]; Cook, Rich [Cook.Rich@epa.gov]; Laroo, Chris [laroo.chris@epa.gov]

Subject: Update on Ethylene Oxide Testing and Related Topics
Location: AA-Room-Office-N66-ConfRoom/AA-OTAQ-OFFICE

Start: 11/13/2019 3:05:00 PM
End: 11/13/2019 3:55:00 PM
Show Time As: Busy

Required Attendees: Hoyer, Marion; Kathryn Sargeant (sargeant.kathryn@epa.gov); Michael Olechiw (olechiw.michael@epa.gov); Nelson, Brian; Cullen, Angela; Brusstar, Matt; Walters, Charles; Kolowich, Bruce; Fernandez, Antonio; Cook, Rich; Laroo, Chris

Appointment

From: Walters, Charles [/O=EXCHANGELABS/OU=EXCHANGE ADMINISTRATIVE GROUP (FYDIBOHF23SPDLT)/CN=RECIPIENTS/CN=6FEBBEBBF7B34543BCD17A79E02AE712-WALTERS, CHARLES]
Sent: 7/24/2019 3:45:29 PM
To: Imfeld, Sterling [imfeld.sterling@epa.gov]

Subject: EtO update
Location: Sterling's Office

Start: 7/29/2019 8:00:00 PM
End: 7/29/2019 8:30:00 PM
Show Time As: Tentative

Required Attendees: Imfeld, Sterling

Quick update on EtO and impacts to ETC

- Small engine testing
  - EtO sampling
  - Sample flow study
- QAPP
- FRHR

Message

From: Walters, Charles [/O=EXCHANGELABS/OU=EXCHANGE ADMINISTRATIVE GROUP (FYDIBOHF23SPDLT)/CN=RECIPIENTS/CN=6FEBBEBBF7B34543BCD17A79E02AE712-WALTERS, CHARLES]
Sent: 8/5/2019 11:40:22 AM
To: Hildreth, Kirk [Hildreth.Kirk@epa.gov]
Subject: Weekly Activity 8/5/2019

Weekly Activity 8/5/2019

Chuck Walters

Active Projects

Siemens engineering study was approved and ordered against the maintenance/upgrade contract, timing of engineering results is TBD.

I submitted a write-up of proposed temperature and humidity setpoints for sensor calibration. Also, I found a rounding error in WIF calculator and submitted proposed solution to QST. Also participated in mock calibration with QST as an "observation" of using new setpoints.

EtO work continues, over ½ my time. Specifically looking at data, sampling methods, test plans, and calculations. I developed 2 spreadsheets demonstrating issues with canister sample; specifically, standard volumes vs. expected volumes based on flowrate and submitted to ASD (I will forward you this work). Also, I developed questions for ORD's contractor designed to resolve this issue.

The metrology lab ordered 3 flowmeters (per my specs) so that I can verify proportional flow of Summa canister in support of EtO work.

D Smail ordered sample lines for EtO sampling in small engines.

I've spent little time in D006 due to the other work, especially EtO. There were discussions that I would be Coordinator for D006; however, I don't know how far that has gone. Was this just to find something for me or does management see a need here? We should revisit this.

The CFR checklist for D006 is starting, I will be working on 1066 G (I haven't started this work)

Last week, we received the AVL proposal for the Host and Puma upgrades in Hot Test. There are several issues with proposal. I outlined the concerns in an email that I copied you on. Michelle and I are meeting with AVL hopefully this week to discuss these issues.

Pending Projects

Training

The following were completed last week

Message

From: Walters, Charles [/O=EXCHANGELABS/OU=EXCHANGE ADMINISTRATIVE GROUP (FYDIBOHF23SPDLT)/CN=RECIPIENTS/CN=6FEBBEBBF7B34543BCD17A79E02AE712-WALTERS, CHARLES]
Sent: 8/12/2019 12:07:46 PM
To: Hildreth, Kirk [Hildreth.Kirk@epa.gov]
Subject: Weekly Activity 8/12/2019

Weekly Activity 8/12/2019

Chuck Walters

Active Projects

EtO work continues, I developed questions to ORD's contractor regarding sample method. We meet with ORD this week to discuss my questions and Kathy Loftis' questions regarding the analysis method.

I reached out to Facilities to determine the best method for FRHR for EtO sampling and EtO recovery in small engines. The feedback was that they wanted Kathy Loftis' FRHR 19-111 amended. Kathy and I met last week and I forwarded a write-up of the sample method. She is going add this write-up together with amended scope of the EtO recovery method and submit to facilities.

I reviewed the current QAPP with ASD, it looks like EtO sampling is already covered. I will discuss this with Sterling to ensure that he concurs and determine if any additional action is needed.

Per Sterling's request, I completed a cylinder pressure inventory of 10 and 25 ppm NOx. I also sent Sterling proposed questions as a follow-up to the master bench meeting last week. I will forward you that email. He used these questions together with his own questions/concerns and sent to FCC.

Pending Projects

Training

AVL device training this week

The following were completed last week

Message

From: Walters, Charles [/O=EXCHANGELABS/OU=EXCHANGE ADMINISTRATIVE GROUP (FYDIBOHF23SPDLT)/CN=RECIPIENTS/CN=6FEBBEBBF7B34543BCD17A79E02AE712-WALTERS, CHARLES]
Sent: 9/9/2019 12:22:14 PM
To: Hildreth, Kirk [Hildreth.Kirk@epa.gov]
Subject: Weekly Activity 9/09/2019

Weekly Activity 9/09/2019

Chuck Walters

Active Projects

The CO for HTF upgrade Host and Puma upgrade is working on contract mod. Michelle answered the PR and period of performance questions

EtO work continues, Testing at ORD was completed last week; so more data will be coming in the next week or two that I will need to review.

I started looking at D006 checklist; John asked me to do all "yellow" items in Part G. Not much progress here as I've been focused on NOx issue (labwide and in D006)

I received the sample lines for small engine EtO canister sampling.

The flowmeters for EtO testing arrived last week. D Carr is out of office for a couple weeks so they won't be available until next week. I told D Carr that was ok.

Contract mod exercising option 2 for solar calibration for HTF was completed last week.

The status of NOx naming is very unclear to me.

Pending Projects

Training

I completed the required trainings.

The following were completed last week

Message

From: Walters, Charles [/O=EXCHANGELABS/OU=EXCHANGE ADMINISTRATIVE GROUP (FYDIBOHF23SPDLT)/CN=RECIPIENTS/CN=6FEBBEBBF7B34543BCD17A79E02AE712-WALTERS, CHARLES]
Sent: 10/1/2019 5:56:36 PM
To: Loftis, Kathy [loftis.kathy@epa.gov]
Subject: RE: Small Engine EtO testing

Kathy,

Regarding small engines schedule.....yes it can accommodate an additional 1.5 hours.

I am using (6) 1-minute mode samples (into the same can) per test because that is what is currently programmed in the dyno control software to run a nonroad test. If you need longer sample time per mode; I will need to know the mode sample duration so that I can coordinate the software changes on the engine test stand. Since it sounds like I am going to need to make a software change to accommodate your method; perhaps I can change the canister sample rate to match your sample duration so that we can sample concurrently. Also, with the small fuel tanks, we do have a limited time we can hold the engines at the high load points before running out of fuel.

We can discuss further at our coordination meeting on Thursday or feel free to contact me anytime before then to discuss further.

I expect that I will be ordering canisters from Enthalpy within the next couple of weeks. Angela Cullen is reaching out to ORD to determine the necessary lead-time for Enthalpy supplies.

Thanks
Chuck

From: Loftis, Kathy <loftis.kathy@epa.gov>
Sent: Tuesday, October 01, 2019 12:46 PM
To: Walters, Charles <walters.charles@epa.gov>
Subject: RE: Small Engine EtO testing

Chuck,

Many thanks. I have been advocating for some time for a dual-sampling approach (collecting samples for Enthalpy and adsorbent tubes concurrently), but until now it has not been feasible. I appreciate your assistance with this and for facilitating the process now that we are able to do some testing in-house.

The 1 minute sampling tests at 1.2 slpm will be insufficient for the cartridges, but I am working on a way to enable a simple bag sampling protocol that would be performed much like the cannister sampling, but using a bag instead. We have a can that was designed to fill bags, and which can be connected to the sampling port using compression fittings in much the same manner that you will be filling the cannister. Since your test would take, presumably, 30 minutes or so (permitting 24 minutes for connecting and disconnecting cannisters), I am hoping that I can then connect the can sampler when you are finished, and sample over a longer period of time. Given the steady-state nature of the engine test, I don't see an issue with integrating over a longer time to ensure sufficient sample size for analysis when using the cartridges. What is your take on this approach? Do you know whether small engines' schedule will permit additional sampling (let's say an additional 1.5 hours) when you are done?

I need to talk to David Carr about the controllers and get a better feel for how this sampling can works, so I am not sure yet if I will need controllers from Enthalpy, but I will not need cannisters. When do you plan on ordering supplies from Enthalpy?

Again, thank you for your support and assistance with this. It is much appreciated.

Cheers,
Kat

From: Walters, Charles <walters.charles@epa.gov>
Sent: Tuesday, October 1, 2019 7:06 AM
To: Loftis, Kathy <loftis.kathy@epa.gov>
Subject: Small Engine EtO testing

Hi Kathy,

We are planning to do EtO canister testing in small engines in early November so I will be ordering canisters and controllers from Enthalpy in the next couple weeks.

Right now, I am planning on (6) 1 minute samples per test which I assume will be in (1) 15L canister with a nominal 1.2 slpm flowrate.

Ideally, if you are ready, we would like to sample the canisters during the same engine test with your method. So I have some questions on your method so that I can determine if we can sample both methods during the same test or if we need to run separate engine tests.

- Does the sample time described above work for your sample method? Or do you need additional sample time? I can adjust sample time if necessary (somewhat, but I do have a limit on this). We can also run a separate test for you if necessary, I just need to know what sample times you are looking for as I may need to have programming changes completed on the engine test stand.

- Also, do you need canisters and controllers from Enthalpy for your method?

Thanks,
Chuck

Message

From: Walters, Charles [/O=EXCHANGELABS/OU=EXCHANGE ADMINISTRATIVE GROUP (FYDIBOHF23SPDLT)/CN=RECIPIENTS/CN=6FEBBEBBF7B34543BCD17A79E02AE712-WALTERS, CHARLES]
Sent: 10/7/2019 11:25:01 AM
To: Hildreth, Kirk [Hildreth.Kirk@epa.gov]
Subject: Weekly Activity 10/07/2019

Weekly Activity 10/07/2019

Chuck Walters

Active Projects

The task order contract mod for the HTF PUMA and Host work is complete. I need to write the CTF SOW, but I haven't started.

EtO work continues, most recent test data came in early last week. I have concerns regarding sample flow and quantity. I provided spreadsheet to ASD showing the issue; they forwarded on to ORD. ASD to schedule separate meeting with limited ORD staff wo that we can discuss.

My focus has been gas lab; specifically, current status and inventory of cal gasses and house gasses (hooked up on dock). I am not tracking bulk gasses or any gasses not connected to lab on dock or not used for gas naming. We had trouble with bench communication on Thursday. Mario and Sharayn were able to resolve issue. Once inventory is settled and confirm that bench is working, we will try and name a gas. Don and I still need to inventory gravimetrics and SRM's. I'm sure there are gasses that need to be ordered.

I understand that the lab is focused on low NOx naming; however, that isn't the focus for Don and I now. Here is how I see the priority (please let me know if you disagree); so it will take time to get to low NOx naming:

1. House gas cylinder inventory, order status, and items needed to be ordered (to keep lab running)
2. Span gas inventory (to keep lab running)
3. Gravimetrics and SRM inventory (necessary to name gasses)
4. Name most immediate needed gas (to keep lab running)
5. Work on low NOx naming issue and close-out contract with AVL
6. Investigate FID fuel and O2 consumption

I am working on small engine test method that will allow canister testing and Kathy Loftis' sample method to be run concurrently. Tentative schedule is to run these tests in early November. I need ASD to agree to a slight change in test plan to accommodate concurrent sampling.

The flowmeters and software to be used for EtO testing have been received, configured, checked-out and ready for testing.

Contract mod exercising option 2 for solar calibration for HTF was completed last week. I scheduled a solar cal in HTF to be completed on Oct 21.

Dan McBryde invited me to a Siemens site visit meeting today; I assume this is for the "tempered loop engineering study"; but I'm not sure.

HTF humidifier overheated last week. I was not contacted on this. I see that the device is locked out.

HTF VFD repair is on order. Siemens to arrange labor once they receive it.

Due to gas lab focus, I'm not working on D006 checklist or anything related to D006.

If you want Don and I to do any work outside of gas lab; we need to discuss where to get help. Right now, we don't know what help we need. I do know that Don's other duties need to be suspended until we can get this gas lab figured out.

I think that Don and I are both off the week of Oct 21, so we need coverage for gas deliveries and house gas cylinder pressure monitor and 6 pack change-over during that week.

Pending Projects

Training

The following were completed last week

Message

From: Walters, Charles [/O=EXCHANGELABS/OU=EXCHANGE ADMINISTRATIVE GROUP (FYDIBOHF23SPDLT)/CN=RECIPIENTS/CN=6FEBBEBBF7B34543BCD17A79E02AE712-WALTERS, CHARLES]
Sent: 10/21/2019 11:01:40 AM
To: Hildreth, Kirk [Hildreth.Kirk@epa.gov]
Subject: Weekly Activity 10/21/2019

Weekly Activity 10/21/2019

Chuck Walters

Active Projects

EtO work continues, we met with ORD last week to discuss my concerns with sample proportionality. Team thinks it is a particulate issue on cold starts (as we only see this issue on bag 1). Will investigate further when we get canisters here to do small engine testing. OTAQ team agrees that we cannot quantify the EtO mass to a dyno test until this issue is resolved.

ASD and I are meeting with ORD and Enthalpy next week to discuss ordering canisters and controllers for small engine testing. Looks like this testing will now be late November or early December.

I am working on small engine test method that will allow canister testing and Kathy Loftis' sample method to be run concurrently. Tentative schedule is to run these tests once we receive canisters (that meeting with ORD is next week to discuss timing). ASD agreed to a slight change in test plan to accommodate concurrent sampling to ensure that each sample method is presented with the same dilute exhaust concentration; I proposed to use a steady state mode 3 approach.

The flowmeters and software to be used for EtO testing have been received, configured, checked-out and ready for testing.

My focus has been gas lab; specifically, current status and inventory of cal gases and house gases (hooked up on dock), and naming NOx (and other gases as needed). I am <u>not</u> tracking bulk gases or any gases not connected to lab on dock or not used for gas naming.

All "dock" connected gases pressures are being recorded daily. O2 and FID fuel consumption seems to be an issue. O2 lost 400 psi, and FID lost 250 psi during the power shutdown. This would suggest a leak somewhere in system as all benches were powered off. Not sure is this is FCC or TSC responsibility as the gas distribution (gas lines) still resides in FCC. Or perhaps this would be a collaborative effort.

NOx naming was successful for 2 sessions last week. We are not seeing NOx instability; however, still to early to rule out. Don and I have a list of issues we want AVL to clean up. We plan to use gas divider to cut gases to low NOx concentration to further study and try and reproduce the reported NOx instability.

NOx SRM and NOx Standards inventory is very thin. This is the biggest concern right now in naming NOx; however, we have been able to work around it so far.

I scheduled a solar cal in HTF to be completed today, I expect Atlas to be here this morning.

Due to gas lab focus, I'm not working on D006 checklist or anything related to D006.

Pending Projects

Training

I completed all assigned training; namely, Fire, Crane, and Compressed Gases

The following were completed last week

Message

From: Walters, Charles [/O=EXCHANGELABS/OU=EXCHANGE ADMINISTRATIVE GROUP (FYDIBOHF23SPDLT)/CN=RECIPIENTS/CN=6FEBBEBBF7B34543BCD17A79E02AE712-WALTERS, CHARLES]
Sent: 10/21/2019 12:20:53 PM
To: Slater, Jonathan [Slater.Jonathan@epa.gov]
CC: Patel, Manish [patel.manish@epa.gov]
Subject: RE: NRSI CVS tunnel - added ports for EtO testing

Jon,
Thanks for the update and getting those ports installed. We are still a few weeks out on getting canisters, so go ahead and plug those ports for right now.

Chuck

From: Slater, Jonathan <Slater.Jonathan@epa.gov>
Sent: Wednesday, October 16, 2019 3:23 PM
To: Walters, Charles <walters.charles@epa.gov>
Cc: Patel, Manish <patel.manish@epa.gov>
Subject: NRSI CVS tunnel - added ports for EtO testing

Chuck,

I added the ports we discussed. Our next confirmatory test is scheduled for Tuesday morning, if you'd like to have Don work on the sample lines it's available until then.

Message

From: Walters, Charles [/O=EXCHANGELABS/OU=EXCHANGE ADMINISTRATIVE GROUP (FYDIBOHF23SPDLT)/CN=RECIPIENTS/CN=6FEBBEBBF7B34543BCD17A79E02AE712-WALTERS, CHARLES]
Sent: 11/4/2019 12:29:08 PM
To: Hildreth, Kirk [Hildreth.Kirk@epa.gov]
Subject: Weekly Activity 11/04/2019

Weekly Activity 11/04/2019

Chuck Walters

Active Projects

ASD and I met with ORD/Enthalpy/Jacobs, we requested canisters for analysis. Per ORD's Tom Long, he requested that we submit 1 canister request that covers several phases so that he can amend contract now as he is retiring in December. I worked with ASD to determine future testing and we submitted that to ORD. The testing includes small engine (E10 and E0), light duty gasoline vehicle, and heavy duty diesel vehicle.

I am working with small engine staff to run a practice EtO test as their schedule allows. I want to verify the software changes I asked Paul to do.

D Haugen asked me several week ago to schedule periodic EtO coordination meetings with testing staff. There have been 3 or 4 meetings so far, one is scheduled this week. If you are interested I can add you to the invite.

My focus has been gas lab; specifically, current status and inventory of cal gases and house gases (hooked up on dock), and naming NOx (and other gases as needed). I am <u>not</u> tracking bulk gases or any gases not connected to lab on dock or not used for gas naming. Last week, you mentioned that you have assigned T Wagner this task so I will consider this covered. We should probably discuss this as bulk N2 was not on Bruce' spreadsheet (but was mentioned in his email)

Don has sent several software issues to AVL that need addressed before we can accept the bench. Also, there is a hardware issue that needs resolved; I asked S George to ask the AVL project manager to submit to service Hotline.

Don S and I want to tee into both benches (AVL & Horiba) in gas lab to study and/or isolate any NOx instability using Horiba gas divider. This will allow us to study any instability without using precious low NOx standards or gases. Don D is helping with the Horiba bench and gas divider.

All "dock" connected gases pressures are being recorded daily. O2 and FID fuel consumption seems to be an issue. O2 lost 400 psi, and FID lost 250 psi during the power shutdown. This would suggest a leak somewhere in system as all benches were powered off. Not sure is this is FCC or TSC responsibility as the gas distribution (gas lines) still resides in FCC. Or perhaps this would be a collaborative effort.

I named 2.5 and 5% CO2 gases last week.

NOx SRM and NOx Standards inventory is very thin. This is the biggest concern right now in naming NOx; however, we have been able to work around it so far.

I scheduled a solar cal in HTF to be completed on Oct 21; however, the cal cert was not traceable to ISO 17025, so the calibration did not happen. The contractor now has the standard 17025 calibrated; he is scheduled for Nov 5 to complete the calibration.

Due to gas lab focus, I'm not working on D006 checklist or anything related to D006.

Pending Projects

Training

I completed all assigned training; namely, Fire, Crane, and Compressed Gases

The following were completed last week

Message

From: Walters, Charles [/O=EXCHANGELABS/OU=EXCHANGE ADMINISTRATIVE GROUP (FYDIBOHF23SPDLT)/CN=RECIPIENTS/CN=6FEBBEBBF7B34543BCD17A79E02AE712-WALTERS, CHARLES]
Sent: 10/9/2019 11:00:19 AM
To: Slater, Jonathan [Slater.Jonathan@epa.gov]
Subject: EtO sampling procedure and canister
Attachments: image4.jpeg; EtO Sampling Procedure Draft 6-17-19.docx

Jon,

Attached is a EtO sampling procedure prepared by ASD. Also, is a picture of a canister sample setup from dyno testing at RTP. I would like a similar setup in small engines. The canister and controller are provided by Enthalpy (a contractor). Pictured is a 6 Liter canister, a 15 liter canister might be provided for our testing, I will let you know. We ordered passivated sample line and fittings; Don Smail has it.

Thanks for your help. Any questions, please contact me.
Chuck

Message

From: Walters, Charles [/O=EXCHANGELABS/OU=EXCHANGE ADMINISTRATIVE GROUP (FYDIBOHF23SPDLT)/CN=RECIPIENTS/CN=6FEBBEBBF7B34543BCD17A79E02AE712-WALTERS, CHARLES]
Sent: 12/2/2019 1:26:39 PM
To: Hildreth, Kirk [Hildreth.Kirk@epa.gov]
Subject: Weekly Activity 12/2/2019

Weekly Activity 12/2/2019

Chuck Walters

Active Projects

J Slater and I ran a practice small engine test on the in-house Honda horizontal. We are ready to run EtO testing once canisters are available

We plan to run a nonroad small engine test on Dec 4th to sample K Loftis' method.

We met with ORD last week regarding canisters; most likely canisters won't be available until after the holidays. They are still working with their contractor. ORD asked questions on the expected dilution factor for all canister samples. I researched this and answered ORD last week.

We received the F750 (phase 5) data from ORD and Enthalpy, I reviewed the data. I found issues with the canister pressurization data. I discussed this issue with ORD, the report was revised. Upon discussion, I am confident that my original concern does not carry through to the resulting concentration.

Gas consumption is an issue, specifically O2 and FID. Currently, there is flowmeter installed on He, I would like to add meters to H2, FID, and O2. This would help isolate the issue. I would like to ask Tom V to work on this purchase and installation, let me know your thoughts. Update: I asked Tom to look into this.

I am working with QST in updating QSP's and work instructions. We meet weekly on this. There is a lot of work needed here. QST and I are just beginning to quantify the scope of this work.

I am investigating 17025 traceability of the span gases; I asked Don to ask Matheson for 17025 documentation.

I am investigating the ability retaining/re-using curve in master bench for bench and gas trouble-shooting only. Gas naming process is not affected.

Regarding the new span ranges that QST was working with FCC on before the gas lab transition to TSC....I reviewed the current span gas inventory against the new proposed span ranges. Most of the 10 ppm O2 and CH4 inventory is outside this new range. I am looking into this; most likely I will propose new span ranges that will still meet the needs of the laboratory and also be able to use current inventory. Update: still working on this; I hope to have a proposal to QST this week. Most likely, the team will reconvene to review my proposal.

Due to gas lab focus, I'm not working on D006 checklist or anything related to D006.

Pending Projects

Training Up to date

The following were completed last week

Message

From: Walters, Charles [/O=EXCHANGELABS/OU=EXCHANGE ADMINISTRATIVE GROUP (FYDIBOHF23SPDLT)/CN=RECIPIENTS/CN=6FEBBEBBF7B34543BCD17A79E02AE712-WALTERS, CHARLES]
Sent: 12/23/2019 12:00:03 PM
To: Hildreth, Kirk [Hildreth.Kirk@epa.gov]
Subject: Weekly Activity 12/23/2019

Weekly Activity 12/23/2019

Chuck Walters

Active Projects

I am working with QST in updating QSP's and work instructions. We meet weekly on this. There is a lot of work needed here. QST and I are just beginning to quantify the scope of this work.

N2O analyzer is now communicating. I ran a successful curve last week

AVL worked on reporting sig fig issue. I met with QST on this. The sig figs rules were being applied to the wrong values on report; QST agreed. I advised AVL and S George.

I provided a GLAS bench open item summary to S George.

Don and I am working on a close-coupled NOx naming station on wall just west of GLAS bench.

We received several NOx SRM's last week, specifically, 100 and 250. 5 ppm are also ordered but not here yet. We really need 10,25,50 but they are not available to 2nd or 3rd quarter of 20 FY.

Per the data I presented last week, the quality of Matheson NOx 1%'s are suspect. This revealed a vulnerability in the naming process. The process allows cylinder naming that is 3% off (per my analysis discussed last week) as there is no criteria on how far the corrected concentrations varies from vendor 1% named concentration. I have work arounds for this; specifically, using the new SRM's, and/or Airgas 1%'s as standards. This is not an ideal or sustainable solution. Even further evidence of needing "saved" curves and/or the use of a gas divider in trouble-shooting and isolating issues with gas Standards.

I am investigating low NOx bench read repeatability, specifically 25 ppm and below.

I worked to find EPA owned Diesel Ram (2003 3500), to be used in EtO testing.

My proposed span gas range tolerance was approved by QST and testing groups, (this removed 20+ cylinders from "QC Hold" status).

I worked with testing groups in finding traceable Ethane cylinder, and then added to SRS.

We should discuss removing the audible alarm from the FID, H2, He, and O2. The audible alarm provides no value add to me; however, it does add confusion for everyone else.

Due to gas lab focus, I'm not working on D006 checklist or anything related to D006.

Pending Projects

Training Up to date

The following were completed last week

Message

From: Walters, Charles [/O=EXCHANGELABS/OU=EXCHANGE ADMINISTRATIVE GROUP (FYDIBOHF23SPDLT)/CN=RECIPIENTS/CN=6FEBBEBBF7B34543BCD17A79E02AE712-WALTERS, CHARLES]
Sent: 6/10/2019 6:37:24 PM
To: Nelson, Brian [nelson.brian@epa.gov]
Subject: EtO data as it's available

Brian,

As data becomes available on EtO testing, please share with me. As I understand it, the phase I vehicle data is complete but I haven't seen any yet.

Thanks
Chuck

Appointment

From: Walters, Charles [/O=EXCHANGELABS/OU=EXCHANGE ADMINISTRATIVE GROUP (FYDIBOHF23SPDLT)/CN=RECIPIENTS/CN=6FEBBEBBF7B34543BCD17A79E02AE712-WALTERS, CHARLES]
Sent: 6/12/2019 11:25:50 AM
To: Haugen, David [haugen.david@epa.gov]

Subject: Tentative: TATD's EtO testing
Location: David's Office

Start: 6/12/2019 12:30:00 PM
End: 6/12/2019 1:00:00 PM
Show Time As: Busy

David,
We are meeting with Siemens regarding Hot Test tempered loop at 8:00 today. I see I'm optional in your meeting. I will be in Conf C if needed.

Chuck

Message

From: Walters, Charles [/O=EXCHANGELABS/OU=EXCHANGE ADMINISTRATIVE GROUP (FYDIBOHF23SPDLT)/CN=RECIPIENTS/CN=6FEBBEBBF7B34543BCD17A79E02AE712-WALTERS, CHARLES]
Sent: 6/26/2019 2:48:04 PM
To: Smail, Donald [smail.donald@epa.gov]
CC: Hildreth, Kirk [Hildreth.Kirk@epa.gov]; Veling, Thomas [Veling.Thomas@epa.gov]
Subject: FW: Restek Silcosteel®-coated tubing and fittings quote

Don,

I am on AL until July 8th. If this quote comes in while I'm gone, please work with Tom and Kirk in getting this ordered.

This order is to support EtO testing in nonroad small engine.

As always, thanks for your help.

Chuck

From: Kevin Ray <kray@mvfi.com>
Sent: Tuesday, June 25, 2019 3:20 PM
To: Smail, Donald <smail.donald@epa.gov>
Cc: Walters, Charles <walters.charles@epa.gov>
Subject: Re: Restek Silcosteel®-coated tubing and fittings quote

On it. Quote to follow.

Thank you,

Kevin Ray
Sales Manager
Michigan Valve & Fitting, inc.
Cell: 810-602-6664
Office: 586-598-9000

On Jun 25, 2019, at 3:17 PM, Smail, Donald <smail.donald@epa.gov> wrote:

External Sender
Need 20 ft of ¼ -316-SS tubing
Three each of the fittings below
4-4 FBZ male connector
4-4 HBZ Union
4-4-4 JBZ Tee
4-4 CBZ male elbow
4-4 EBZ union elbow
4-FNZ Plug

Thanks Kevin

https://www.restek.com/pdfs/300-02-001.pdf
https://www.restek.com/Supplies-Accessories/GC-Accessories/Fittings
This message was received from an outside source. Please treat this message with caution and do not open any attachments if you are unfamiliar with the sender or question the validity of the message.

Message

From: Walters, Charles [/O=EXCHANGELABS/OU=EXCHANGE ADMINISTRATIVE GROUP (FYDIBOHF23SPDLT)/CN=RECIPIENTS/CN=6FEBBEBBF7B34543BCD17A79E02AE712-WALTERS, CHARLES]
Sent: 6/26/2019 6:47:38 PM
To: Hildreth, Kirk [Hildreth.Kirk@epa.gov]
Subject: EtO work

Kirk,

Welcome back, hope you had a good time off. I am on leave until July 8th.

The EtO work has accelerated. I'm spending at least ½ time on this work, if not more. I'm ok with this, it's actually enjoyable....just want you to be aware of this. I briefed David on this last Monday (June 24); he seems ok with it.

I'm going to several meetings. Some I may scale back on, others may increase.

I am mostly spending time working with ASD on test plans for NRMRL, reviewing data, verifying calculations, deriving Standard density for EtO, identifying engines that could be run in small engines, and recommending test cycles that can be run here at NVFEL. We will be sampling for EtO in small engines sometime in September. Smail is getting quotes for sample line and fittings. Tom Veling is going to order once Don gets quote. When the quote comes in, please approve PR.

There is a lot of work here and the focus seems to be intensifying.

I've kept D006 build and check-out moving. We got thru repcars, gasoline, hybrid, and starting diesel. Steve is back from leave on July 1, so he will continue this work. I sent him an email on where we are at. I told him to call me if he has questions.

If something critical comes up, contact my cell.

Thanks
Chuck

Message

From: Haugen, David [haugen.david@epa.gov]
Sent: 6/12/2019 11:44:42 AM
To: Walters, Charles [walters.charles@epa.gov]
Subject: Re: Tentative: TATD's EtO testing

OK. That's fine.
Thanks, David

Sent from my iPhone

> On Jun 12, 2019, at 7:25 AM, Walters, Charles <walters.charles@epa.gov> wrote:
>
> David,
> We are meeting with Siemens regarding Hot Test tempered loop at 8:00 today. I see I'm optional in your meeting. I will be in Conf C if needed.
>
> Chuck
> <meeting.ics>

Message

From: Slater, Jonathan [Slater.Jonathan@epa.gov]
Sent: 6/14/2019 5:19:26 PM
To: Walters, Charles [walters.charles@epa.gov]
Subject: small engine Weingartz shopping cart
Attachments: Weingartz shopping cart.pdf

Chuck,

Here's the order I'm going to be making for small engine handheld testing (sorry for the small print). Weingartz has waived it's terms and conditions for us but their available models are limited to Echo (with some Shindaiwa), Redmax (commercial line of Husqvarna) and Stihl. I've selected a range of engines I'll use for testing various handheld fixtures, but we can add something more specific for the ethylene oxide testing also. It's hard to be certain since I'm ordering models and not engine families, but I believe the Echo chain saw and RedMax string trimmer have catalysts. All of the engines are 2 stroke.

We can use any of the Nonhandheld engines we already own for the ethylene oxide testing as well, or order additional engines at a later date if it looks like the testing plans are still in flux.

Message

From: Nelson, Brian [nelson.brian@epa.gov]
Sent: 6/18/2019 12:05:23 PM
To: Walters, Charles [walters.charles@epa.gov]
Subject: FW: Draft EtO Sampling Procedure
Attachments: EtO Sampling Procedure Draft 6-17-19.docx

FYI...Laroo's draft of a procedure.

From: Laroo, Chris
Sent: Monday, June 17, 2019 12:47 PM
To: Cullen, Angela <cullen.angela@epa.gov>; Nelson, Brian <nelson.brian@epa.gov>
Subject: Draft EtO Sampling Procedure

Brian and Angela,

Attached please find for review a first draft of an EtO sampling procedure for NVFEL. I have asked RTP for their CoC and sample log template and will review and pass those along when I receive them.

Regards,

Chris Laroo
Environmental Protection Specialist
US Environmental Protection Agency
Office of Transportation and Air Quality
Assessment and Standards Division
2000 Traverwood Dr.
Ann Arbor, MI 48105
(734) 214-4937
(734) 214-4055 (fax)
Email: laroo.chris@epa.gov