PAY ITEM NO.	DESCRIPTION	UNIT	QUANTITY
000 003	EMPLOYEE TRAINING	HOURS	4000
103 007	TYPE "C" WARNING LIGHTS	EACH	150
103 009	TYPE "B" WARNING LIGHTS	EACH	100
103 013	FLASHING ARROW PANELS	EACH	2
103 019	SAFETY BARRELS	EACH	200
103 021	24" X 24" ORANGE FLAGS	EACH	100
103 023	CONSTRUCTION LANE CLOSING	JOB	1
103 025	TRUCK MOUNTED ATTENUATORS	EACH	2
103 027	TYPE "A" WARNING LIGHTS	EACH	14
103 029	TIMBER TRAFFIC SIGN POSTS	L.F.	156
103 035	FEDERAL AID PROJECT SIGN	EACH	2
103 051	SEDIMENT CONTROL	JOB	1
104 002	MOBILIZATION	JOB	1
104 003	AS-BUILT DRAWINGS	JOB	1
104 004	ENGINEER'S FIELD FACILITIES	JOB	1
104 005	FIELD LAYOUT	JOB	1
207 015	SIGN REMOVAL, SOUTH PORTAL FASCIA	JOB	1
301 001	CONTINGENT REPLACEMENT OF STORM DRAIN PIPE [redacted]	L.F.	400
303 027	AIR DUCT DRAIN INLET SYSTEM [redacted]	JOB	1
303 039	REPLACE INLET GRATE	EACH	1
306 001	FIRE HYDRANT REPLACEMENT	EACH	1
306 003	FIRE HYDRANT INSPECTION	EACH	21
309 011	CLEAN AND INSPECT 12" PIPE	L.F.	250
309 013	CLEAN AND INSPECT 14" PIPE	L.F.	5,350
309 015	CLEAN AND INSPECT 15" PIPE	L.F.	3,279
309 017	CLEAN AND INSPECT 18" PIPE	L.F.	798
309 019	CLEAN AND INSPECT 21" PIPE	L.F.	1,170
309 021	CLEAN AND INSPECT 24" PIPE	L.F.	105
309 023	CLEAN AND INSPECT 30" PIPE	L.F.	1,515
313 063	CLEAN MANHOLE	EACH	66
313 065	CLEAN CATCH BASINS	EACH	53
313 067	CLEAN DROP INLETS	EACH	54
313 069	CLEAN DUCT INLETS	EACH	6
412 001	REMOVE EXISTING AND TEMPORARY PAVEMENT MARKINGS	S.F.	16,000
413 002	THERMOPLASTIC LANE MARKING, 4 INCH	L.F.	22,350
413 004	THERMOPLASTIC LANE MARKING, 4 INCH DASH	L.F.	5,300
413 008	THERMOPLASTIC LANE MARKING, 8 INCH	L.F.	4,950
413 010	THERMOPLASTIC LANE MARKING, 12 INCH	L.F.	2,750
413 012	THERMOPLASTIC LANE LETTERS, 8 FOOT	EACH	52
413 013	THERMOPLASTIC LANE ARROWS, 8 FOOT	EACH	36
413 053	RAISED REFLECTIVE PAVEMENT MARKERS	EACH	1,100
413 061	TEMPORARY PAVEMENT MARKINGS 4" WIDE	L.F.	48,000
505 001	REMOVAL OF EXISTING SIDEWALK	C.Y.	550
603 015	PARTIAL RECONSTRUCTION OF PCC SIDEWALK	C.Y.	60
603 051	CONCRETE REPAIR	S.F.	30
604 021	REPAVE PORTIONS OF EXISTING ROADWAY PAVEMENT	TONS	400
622 003	OVERHEIGHT VEHICLE DETECTION AND WARNING SYSTEM	JOB	1
622 007	LANE CONTROL SIGNALS	EACH	9
622 009	ROADWAY SIGN LIGHTING	JOB	1
622 101	SECONDARY UNIT SUBSTATION	EACH	4
622 103	TUNNEL ROADWAY LIGHTING CIRCUIT BREAKER PANELBOARD	EACH	20
622 105	TUNNEL ROADWAY LUMINAIRES	JOB	1
622 107	TUNNEL ROADWAY LIGHTING AND MISCELLANEOUS CONTROL	JOB	1
	SYSTEMS		
622 201	PROGRAMMABLE LOGIC CONTROLLER	JOB	1
622 205	CONTROL CONSOLE	EACH	1
622 207	REHABILITATION OF SWITCHBOARDS, FAN CONTROLLERS AND	JOB	1
	FAN MOTORS		
622 211	HEAT DETECTION SYSTEM FOR TUNNEL ROADWAYS	JOB	1
622 307	TRAFFIC DETECTION INDUCTIVE LOOPS	JOB	1
622 401	FIRE ALARM SYSTEMS IN NORTH AND SOUTH VENTILATION	JOB	1
	FACILITIES AND TUNNEL CO ANALYZER ROOM		
622 403	TUNNEL TELEPHONE NICHE DOOR MONITORING SYSTEM	JOB	1

PAY ITEM NO.	DESCRIPTION	UNIT	QUANTITY
622 405	TUNNEL EMERGENCY TELEPHONE SYSTEM	JOB	1
622 407	EMERGENCY TELEPHONE BETWEEN TUNNEL CONTROL ROOM	JOB	1
	AND LABOR DEPARTMENT BUILDING OFFICE		
622 409	REHABILITATION OF HIGHWAY DEPARTMENT RADIO SYSTEM	JOB	1
622 411	CLOSED CIRCUIT TV SYSTEM	JOB	1
622 501	CONDUIT SYSTEMS	JOB	1
622 503	POWER, CONTROL AND COMMUNICATION WIRE AND CABLE	JOB	1
622 505	REHABILITATION OF HYDRANT HEATING SYSTEM	JOB	1
622 507	REHABILITATION OF AIR DUCT LIGHTING SYSTEM	JOB	1
622 509	REHABILITATION OF FAN ROOMS, EQUIPMENT ROOMS AND	JOB	1
	CONTROL ROOM LIGHTING		
622 513	DEMOLITION OF TUNNEL ROADWAY LIGHTING POWER AND	JOB	1
	CONTROL EQUIPMENT		
622 515	DEMOLITION OF TUNNEL ROADWAY LIGHTING LUMINAIRES,	JOB	1
	CONDUITS AND WIRING		
622 517	DEMOLITION OF TUNNEL VENTILATION CONTROL EQUIPMENT	JOB	1
622 519	ABANDON ELECTRICAL MANHOLE	EACH	12
622 521	15 KVA DRY TYPE TRANSFORMER AND PANELBOARD	JOB	1
622 601	AIR RIGHTS TUNNEL, SECOND SERVICE	JOB	1
622 801	SPARE PARTS	JOB	1
623 001	CARBON MONOXIDE DETECTION SYSTEM	JOB	1
623 003	FAN N.B.L.-E11 SHAFT REPAIR AND BEARINGS REPLACEMENT	JOB	1
623 005	FAN REHABILITATION	JOB	1
623 007	DAMPER DOOR REPLACEMENT	JOB	1
623 009	REHABILITATION OF CONTROL ROOM AND EQUIPMENT ROOMS	JOB	1
	HVAC SYSTEMS		
623 011	BEARING REPLACEMENT	EACH	16
623 013	SHAFT BEARING JOURNAL MODIFICATION	EACH	16
623 051	CLEAN FRESH AIR DUCT - S.B.L.	L.F.	3,590
623 053	CLEAN EXHAUST AIR DUCT - S.B.L.	L.F.	3,065
623 055	CLEAN FRESH AIR DUCT - N.B.L.	L.F.	3,395
623 057	CLEAN EXHAUST AIR DUCT - N.B.L.	L.F.	3,150
626 001	CONSTRUCTION WARNING SIGNS	S.F.	480
626 003	CEILING MOUNTED SIGN SUPPORTS AND LIGHTING	JOB	1
626 004	GUIDE SIGN PANELS	S.F.	2,160
626 005	MOVABLE SIGN BASES	EACH	26
626 007	TRAFFIC SIGNS	S.F.	575
626 011	HAZARD WARNING SIGN (OBJECT MARKER)	S.F.	63
626 013	REMOVAL OF EXISTING SIGNS	S.F.	70
626 031	VARIABLE MESSAGE SIGNS	JOB	1
628 007	PORTABLE PCC SAFETY BARRIERS	L.F.	19,550
629 017	SAND FILLED IMPACT ATTENUATOR MODULES	EACH	35
629 035	8-BAY HEX-FOAM SANDWICH IMPACT ATTENUATOR (WIDE)	EACH	1
629 037	8-BAY HEX-FOAM SANDWICH IMPACT ATTENUATOR (MEDIUM)	EACH	1
701 023	DRILLED PIER FOUNDATION	JOB	1
703 009	REPAIR OF MASSACHUSETTS AVE. AND H'ST. BRIDGE APPROACHES	JOB	1
703 019	REPLACE TUNNEL CEILING PANELS	S.F.	900
703 021	REPLACE TUNNEL CEILING JOINT SEALS	L.F.	1,100
703 029	PCC BARRIERS	C.Y.	2,040
703 051	LIGHTWEIGHT PCC FILL FOR BEAMS	C.Y.	6
706 017	SINGLE FACE STEEL BARRIER	EACH	8
706 051	NORTH AND SOUTH PORTAL STRUCTURAL STEEL SUPPORT	LBS.	25,000
706 071	REHABILITATION OF NORTH PORTAL FASCIA	JOB	1
706 073	REHABILITATION OF SOUTH PORTAL FASCIA	JOB	1
713 001	CANTILEVER SIGN STRUCTURE (C-1)	JOB	1
713 003	CANTILEVER SIGN STRUCTURE (C-2)	JOB	1
713 005	CANTILEVER SIGN STRUCTURE (C-3)	JOB	1
713 007	CANTILEVER SIGN STRUCTURE (C-4)	JOB	1
713 009	CANTILEVER SIGN STRUCTURE (C-5)	JOB	1

PAY ITEM NO.	DESCRIPTION	UNIT	QUANTITY
713 011	CANTILEVER SIGN STRUCTURE (C-6)	JOB	1
713 013	CANTILEVER SIGN STRUCTURE (C-7)	JOB	1
713 015	CANTILEVER SIGN STRUCTURE (C-8)	JOB	1
713 017	CANTILEVER SIGN STRUCTURE (C-9)	JOB	1
713 019	PORTAL SIGN STRUCTURE (P-1)	JOB	1
713 021	PORTAL SIGN STRUCTURE (P-2)	JOB	1
714 011	CLEANING TYPE 1 - WATER STAINS	S.F.	2439
714 013	CLEANING TYPE 2 - PAINT	S.F.	439
714 015	CLEANING TYPE 3 - RUBBER	S.F.	322
714 017	CLEANING TYPE 4 - PITCH	S.F.	954
714 019	REPAIR TYPE 1 - WATER DAMAGE	S.F.	2038
714 021	REPAIR TYPE 2 - IMPACT	S.F.	376
714 023	REPAIR TYPE 3 - MOVEMENT	S.F.	208
714 025	REPAIR TYPE 4 - REMOVAL OF EQUIPMENT	S.F.	1644
720 001	REPAINT FACILITIES AREAS - WALLS	S.F.	61000
720 003	REPAINT FACILITIES AREAS - CEILING	S.F.	36500
720 005	REPAINT FACILITIES AREAS - MISCELLANEOUS	JOB	1
730 001	RESINOUS FLOOR COATING SYSTEM	S.F.	48500
740 001	REFURBISHING AND REINSTALLATION OF ACOUSTICAL PANELS	S.F.	288
740 003	NEW ACOUSTICAL PANELS	S.F.	364
740 005	NEW SUSPENSION SYSTEM	L.F.	784
750 001	REHABILITATE DOOR LOCKS	EACH	92
760 001	CONTROL ROOM, SHOWER, JANITOR'S CLOSET AND SINK	JOB	1
800 001	DRILLING GROUT HOLES	L.F.	1000
800 003	INJECTION OF GROUT	GAL.	150
813 001	WALL MOUNTED SIGN SUPPORT	EACH	50

NOTES:

1. FOR SPECIAL PROVISION REFERENCE SEE PAY ITEM SCHEDULE.

TIPPETTS.ABBETT.McCARTHY.STRATTON
ENGINEERS, ARCHITECTS AND PLANNERS
IN ASSOCIATION WITH:
FLEMING CORPORATION

NO	DESCRIPTION	NAME	DATE

REVISIONS

D.C. DEPARTMENT OF PUBLIC WORK
BUREAU OF TRANSPORTATION CONSTRUCTION SERVICES
DESIGN AND ENGINEERING DIVISION

I-395 CENTER LEG OF THE INNER LOOP
REHABILITATION OF
THE MALL TUNNEL

SUMMARY OF QUANTITIES

PROJECT ENG. NW
DESIGNED BY NM
CHECKED BY RB
DRAWN BY MZ
PROJECT MGR.
DIVISION CHIEF
DATE
FILE
SHEET 3

REV. NO.		PROJECT NO.	NO.
3	D.C.	IR-395-1(150)	2

LEGEND

- LIGHTING FIXTURE, TYPE AS NOTED
- TUNNEL LUMINAIRE, FLUORESCENT OR LOW PRESSURE SODIUM.
- EMERGENCY LIGHT.
- JUNCTION BOX (JB), PULL BOX (PB), OR TERMINAL BOX (TB), AS NOTED.
- CLOSED CIRCUIT TELEVISION CAMERA (CCTV).
- VMS — VARIABLE MESSAGE SIGN (VMS).
- LCS — LANE CONTROL SIGNAL (LCS).
- GFR — ZERO SEQUENCE GROUND FAULT SENSOR AND RELAY.
- I/O — REMOTE TERMINAL UNIT INPUT/OUTPUT MODULES.
- K — CIRCUIT BREAKER WITH KEY INTERLOCK
- EMBEDDED CONDUIT
- EXPOSED CONDUIT
- CONDUIT IN CEILING VOID SPACE
- EXISTING CONDUIT TO BE REUSED
- FC — FAN CONTROLLER (FC)
- CC — CONTROL CONSOLE (CC)
- SV — SOLENOID VALVE (SV)
- PS — PRESSURE SWITCH
- PLC — PROGRAMMABLE LOGIC CONTROLLER
- HS — HEAT SENSOR
- ITS — ILLUMINATED TRAFFIC SIGN
- LD — LOOP DETECTOR
- LM — LUMINANCE METER
- RTU — REMOTE TERMINAL UNIT (RTU)

GENERAL NOTES

1. ALL CONSTRUCTION MATERIALS AND PROCEDURES SHALL BE GOVERNED BY THE STANDARD SPECIFICATION FOR HIGHWAYS AND STRUCTURES, DATED 1974, SUPPLEMENTAL SPECIFICATION JUNE 1, 1981, ISSUED BY THE DISTRICT OF COLUMBIA DEPARTMENT OF PUBLIC WORKS EXCEPT AS AMENDED OR SUPPLEMENTED BY THE SPECIAL PROVISIONS.
2. THESE PLANS ARE INCOMPLETE UNLESS ACCOMPANIED BY THE SUPPLEMENTAL SPECIFICATIONS AND SPECIAL PROVISIONS INCLUDED IN CONTRACT DOCUMENTS.
3. ALL EXISTING STRUCTURE AND EQUIPMENT DIMENSIONS, ELEVATIONS, STATIONS AND COORDINATES SHOWN ON THESE PLANS ARE THOSE SHOWN ON REFERENCE AS-BUILT PLANS.
4. BEFORE COMMENCEMENT OF WORK, THE CONTRACTOR SHALL CHECK THE EXISTING CONDITIONS. IF THESE CONDITIONS DO NOT AGREE WITH THOSE SHOWN ON THE DRAWINGS, THE CONTRACTOR SHALL MAKE THE NECESSARY ADJUSTMENTS TO DIMENSIONS SHOWN ON THE PLANS TO INSURE THAT NEW CONSTRUCTION WILL PROPERLY FIT THE EXISTING STRUCTURE.
5. PLANS REPRODUCED FOR THIS CONTRACT FROM REFERENCE PLANS, AS INDICATED ABOVE THE TITLE BLOCK, SHOW THE EXISTING STRUCTURE AND EQUIPMENT IN SCREENED LIGHT FACE AND THE WORK TO BE PERFORMED UNDER THIS CONTRACT IN **BOLD FACE**, UNLESS OTHERWISE INDICATED.
6. NEW PLANS PREPARED FOR THIS CONTRACT SHOW ALL WORK TO BE PERFORMED UNDER THIS CONTRACT UNLESS OTHERWISE INDICATED.
7. ORIGINAL CONSTRUCTION AS-BUILT PLANS, ARE AVAILABLE TO THE CONTRACTOR FOR COORDINATION OF HIS WORK.
8. EQUIPMENT MANUFACTURERS SHOWN ON PLANS INDICATE EQUIPMENT ON WHICH DESIGN IS BASED. EQUAL EQUIPMENT BY OTHER MANUFACTURERS MAY BE SUBSTITUTED AS ALLOWED BY SPECIAL PROVISIONS.

STRUCTURAL NOTES

A. GENERAL

1. THE FOLLOWING GENERAL STRUCTURAL NOTES PRESENT MINIMUM CRITERIA. IN THE EVENT OF CONFLICT BETWEEN THESE NOTES AND OTHER INFORMATION INCLUDED IN THE CONTRACT DOCUMENTS, THE CONTRACTOR SHALL SATISFY THE MORE CONSERVATIVE OR STRINGENT OF THE CONFLICTING REQUIREMENTS.
2. CONTRACTORS ARE RESPONSIBLE FOR AND SHALL VERIFY AND COORDINATE ALL DIMENSIONS AND DETAILS BEFORE PROCEEDING WITH WORK; ANY DISCREPANCIES SHALL BE BROUGHT TO THE IMMEDIATE ATTENTION OF THE ENGINEER.
3. DETAILS SHOWN IN ANY SECTION APPLY TO ALL SIMILAR SECTIONS UNLESS OTHERWISE NOTED.
4. CONTRACTORS SHALL FULLY BRACE, AND/OR PROTECT THEIR WORK IN PROGRESS UNTIL THE WORK IS COMPLETE.
5. CONTRACTORS SHALL PROTECT THE EXISTING STRUCTURES FROM DAMAGE RESULTING FROM THEIR WORK.

B. CODES AND STANDARD

THE FOLLOWING CODES, SPECIFICATIONS AND MANUAL SHALL APPLY TO THE DESIGN, FABRICATION, ERECTION, CONSTRUCTION, QUALITY CONTROL AND SAFETY OF ALL WORK PERFORMED ON THE PROJECT:

1. DISTRICT OF COLUMBIA DEPARTMENT OF PUBLIC WORKS STANDARD SPECIFICATIONS FOR HIGHWAYS AND STRUCTURES, DATED 1974, AND THE SUPPLEMENT SPECIFICATIONS, DATED JUNE 1 1981, AND INTERIM REVISIONS, DATED JUNE 6, 1985.
2. BUILDING CODE REQUIREMENTS FOR REINFORCED CONCRETE (ACI 318-89) AND COMMENTARY.
3. STANDARD SPECIFICATIONS FOR STRUCTURAL CONCRETE FOR BUILDING (ACI 301-84 (88)).
4. DETAILS AND DETAILING OF CONCRETE REINFORCEMENT (ACI 315-80 (R1986)).
5. SPECIFICATION FOR THE DESIGN, FABRICATION AND ERECTION OF STRUCTURAL STEEL FOR BUILDINGS, 9TH EDITION, BY AMERICAN INSTITUTE OF STEEL CONSTRUCTION.
6. AMERICAN WELDING SOCIETY D1.1 - 90. AS MODIFIED BY THE CURRENT AASHTO STANDARD AND SUBSEQUENT INTERIM SPECIFICATIONS FOR WELDING OF STRUCTURAL STEEL HIGHWAY BRIDGES.

C. CONCRETE

1. UNLESS NOTED OTHERWISE ALL NEW CONCRETE SHALL BE LIGHT WEIGHT CONCRETE HAVING A COMPRESSIVE STRENGTH OF 3,000 P.S.I. AT 28 DAYS.
2. ALL REINFORCING STEEL SHALL BE INTERMEDIATE GRADE, NEW BILLET STEEL, DEFORMED BARS CONFORMING TO AASHTO M31, GRADE 60. ALL BARS SHALL BE SECURELY WIRED IN PLACE.

D. STRUCTURAL STEEL

1. ALL NEW STRUCTURAL STEEL SHALL CONFORM TO AASHTO M183, UNLESS NOTED OTHERWISE.
2. UNLESS NOTED OTHERWISE, ALL STRUCTURAL BOLTS SHALL BE 3/4" DIA. HIGH STRENGTH A.S.T.M. A-325 BEARING TYPE.
3. INSTALLATION AND TIGHTENING OF ALL HIGH STRENGTH BOLTS SHALL CONFORM TO THE SPECIAL PROVISION FOR HIGH STRENGTH BOLTS.
4. ALL WELDING SHALL CONFORM TO THE AMERICAN WELDING SOCIETY CODE FOR ARC AND GAS WELDING IN BUILDING CONSTRUCTION. WELDING ELECTRODES SHALL BE E70xx.
5. CUTS, HOLES, COPINGS, ETC. REQUIRED IN STRUCTURAL STEEL MEMBERS FOR THE WORK OF OTHER TRADES SHALL BE SHOWN ON THE STRUCTURAL STEEL SHOP DRAWINGS AND SHALL BE MADE IN THE SHOP. HOLES SHALL BE REINFORCED AS REQUIRED BY THE ENGINEER.
6. BURNING OF HOLES, CUTS, ETC. IN STRUCTURAL STEEL MEMBERS IN THE FIELD WILL NOT BE PERMITTED, EXCEPT WITH THE SPECIFIC APPROVAL OF THE ENGINEER.
7. ALL GROOVE WELDS SHALL BE COMPLETE PENETRATION GROOVE WELDS. ALL FILLET WELDS SHALL BE 3/16" FILLET WELDS MINIMUM, UNLESS NOTED OTHERWISE.
8. THE TERMS BOLT, BOLTED, AND BOLTING USED ON THESE DRAWINGS SHALL BE UNDERSTOOD TO REFER TO HIGH STRENGTH BOLTS (A-325), UNLESS NOTED OTHERWISE.
9. ON ALL WELDS, WHERE BACK-UP PLATES ARE USED, REMOVE BACK-UP PLATE AFTER COMPLETING WELD, GOUGE ROOT AND REWELD.
10. ALL STEEL SURFACES, THAT ARE TO BE ENCASED OR ABUTTING PLACED CONCRETE, SHALL BE UNPAINTED. ALL OTHER SURFACES OF STEEL MEMBERS, EXCEPT AT CONTACT SURFACE OF WELDED CONNECTIONS, SHALL RECEIVE TWO COATS OF SHOP PAINT.
11. ALL ANCHOR BOLTS SHALL BE MINIMUM 2-3/4" DIA., ASTM A-307, UNLESS NOTED OTHERWISE.

E. CONCRETE MASONRY UNITS

1. CONCRETE MASONRY UNITS SHALL BE OF LIGHTWEIGHT AGGREGATE CONFORMING TO ASTM C-50 GRADE N-II AND MANUFACTURED BY LOW PRESSURE STEAM CURING PROCESS.
2. MORTAR FOR MASONRY SHALL BE TYPE S, CONFORMING TO ASTM C-270.

TIPPETTS.ABBETT.McCARTHY.STRATTON
ENGINEERS, ARCHITECTS AND PLANNERS
IN ASSOCIATION WITH
FLEMING CORPORATION

NO	DESCRIPTION	NAME	DATE

REVISIONS

D.C. DEPARTMENT OF PUBLIC WORKS
BUREAU OF TRANSPORTATION CONSTRUCTION SERVICE
DESIGN AND ENGINEERING
I-395 CENTER LEG OF THE INNER LOOP
REHABILITATION OF
THE MALL TUNNEL

GENERAL NOTES AND LEGEND

REG. NO.	STATE	PROJECT NO.	NO.	SHEETS
3	D.C.	IR-395-1(150)	4	199

SHEET NO.	DRAWING NO.	DESCRIPTION
1	G001	TITLE SHEET
2	G002	GENERAL NOTES AND LEGEND
3	G003	SUMMARY OF QUANTITIES.
4	G004	INDEX OF DRAWINGS
5	G005	INDEX OF DRAWINGS, CONTINUATION.
6	G006	CONSTRUCTION SCHEDULE

CIVIL

7	C101	TUNNEL CURB BARRIERS, SIDEWALK REMOVAL
8	C102	TUNNEL CURB BARRIERS, SIDEWALK REMOVAL
9	C103	TUNNEL CURB BARRIERS, SIDEWALK REMOVAL
10	C104	TUNNEL CURB BARRIERS, SIDEWALK REMOVAL
11	C105	CURB BARRIER DETAIL, TYPICAL SECTION
12	C106	TRANSITION CURB BARRIER DETAILS AND CURB BARRIER DETAILS
		AT DOORS OPENINGS
13	C107	CURB BARRIERS DETAILS
14	C108	IMPACT ATTENUATOR AND OBJECT MARKERS DETAILS
15	C109	STORM DRAIN/AIR DUCT SYSTEM CLEANING
		NBL STA. 53+00 TO STA. 62+00 SBL STA. 55+00 TO STA. 64+00
16	C110	STORM DRAIN/AIR DUCT SYSTEM CLEANING
		NBL STA. 41+00 TO STA. 53+00 SBL STA. 43+00 TO STA. 55+00
17	C111	STORM DRAIN/AIR DUCT SYSTEM CLEANING
		NBL STA. 28+00 TO STA. 41+00 SBL STA. 31+00 TO STA. 43+00
18	C112	STORM DRAIN/AIR DUCT SYSTEM CLEANING
		NBL STA. 19+00 TO STA. 28+00 SBL STA. 24+00 TO STA. 31+00
19	C113	STORM DRAIN/AIR DUCT CLEANING SCHEDULE
20	C114	OVERHEIGHT DETECTION SYSTEM, GENERAL/SITE LOCATION PLAN
21	C115	OVERHEIGHT DETECTORS, NEW YORK AVE. TO TUNNEL ENTRANCE E.B.L. &
		W.B.L., LOCATION-1
22	C116	OVERHEIGHT DETECTORS, MASSACHUSETTS AVENUE TO TUNNEL ENTRANCE
		LOCATION-2
23	C117	OVERHEIGHT DETECTORS, RAMP A AND RAMP D TO SOUTH PORTAL
		LOCATION-3
24	C118	GUIDE SIGN SCHEDULE
25	C119	GUIDE SIGN DETAILS - 1
26	C120	GUIDE SIGN DETAILS - 2
27	C121	GUIDE SIGN DETAILS - 3
28	C122	EXISTING UTILITIES-NEW YORK AVE.
29	C123	EXISTING UTILITIES-MASSACHUSETTS AVE.
30	C124	SIGN BRIDGE DETAILS-CANTILEVER SIGN PANELS AND STRUCTURAL DETAILS
31	C125	SIGN BRIDGE DETAILS-PORTAL SIGN PANEL AND END FRAMES
32	C126	SIGN BRIDGE DETAILS-PORTAL TRUSS AND FOOTINGS
33	C127	GUIDE SIGN PANEL - DETAILS
34	C128	MISCELLANEOUS STRUCTURAL DETAILS
35	C129	FIRE HYDRANTS DETAILS
36	C130	TUNNEL SIGNING
37	C131	TUNNEL GUIDE SIGNS-LOCATIONS
38	C132	VARIABLE MESSAGE SIGN - NORTH PORTAL
39	C133	VARIABLE MESSAGE SIGN - SOUTH PORTAL
40	C143	MAINTENANCE OF TRAFFIC KEY PLAN
41	C134	MAINTENANCE OF TRAFFIC PLANS PHASE 1 RUSH HOUR
42	C135	MAINTENANCE OF TRAFFIC PLANS PHASE 1 RUSH HOUR
43	C136	MAINTENANCE OF TRAFFIC PLANS PHASE 1 RUSH HOUR
44	C137	MAINTENANCE OF TRAFFIC PLANS PHASE 1 RUSH HOUR
45	C138	MAINTENANCE OF TRAFFIC PLANS PHASE 2 RUSH HOUR
46	C139	MAINTENANCE OF TRAFFIC PLANS PHASE 2 RUSH HOUR
47	C140	MAINTENANCE OF TRAFFIC PLANS PHASE 2 RUSH HOUR
48	C141	MAINTENANCE OF TRAFFIC PLANS PHASE 2 RUSH HOUR
49	C142	MAINTENANCE OF TRAFFIC PLANS NON-RUSH HOUR TYPICAL LANE CLOSURE
50	C144	PAVEMENT MARKING PLAN
51	C145	PAVEMENT MARKING PLAN
52	C146	PAVEMENT MARKING PLAN
53	C147	PAVEMENT MARKING PLAN

STRUCTURAL

SHEET NO.	DRAWING NO.	DESCRIPTION
54	S101	BORING LOCATION
55	S102	BORING LOCATION
56	S103	"D" STREET PORTAL STRUCTURE DEMOLITION PLAN, SECTIONS AND DETAILS
57	S104	"D" STREET PORTAL STRUCTURE NEW STRUCTURAL DETAILS
58	S105	TUNNEL WATER LEAKAGE REPAIRS STA. 61+87.24 TO STA. 53+02.67 N.B.L.
		STA. 64+01.82 TO STA. 55+17.26 S.B.L.
59	S106	TUNNEL WATER LEAKAGE REPAIRS STA. 53+02.67 TO STA. 46+60.06 N.B.L.
		STA. 55+17.26 TO STA. 48+74.59 S.B.L.
60	S107	TUNNEL WATER LEAKAGE REPAIRS STA. 46+60.06 TO STA. 36+50.00 N.B.L.
		STA. 48+74.59 TO STA. 38+54.81 S.B.L.
61	S108	TUNNEL WATER LEAKAGE REPAIRS STA. 36+50.00 TO STA. 27+53.00 N.B.L.
		STA. 38+54.81 TO STA. 30+40.51 S.B.L.
62	S109	NORTH VENTILATION DUCTS MISCELLANEOUS REPAIRS
63	S110	TYPICAL TUNNEL CROSS SECTIONS
64	S111	LEAK REPAIR PROCEDURE AND DETAILS
65	S112	ELECTRICAL MANHOLE ABANDONMENT AND MISCELLANEOUS CONCRETE
		REPAIR DETAILS
66	S113	TUNNEL CEILING PANEL REHABILITATION DETAILS

ARCHITECTURAL

67	A101	NORTH VENTILATION FACILITY TUNNEL ELECTRICAL ROOM REACTOR ROOM AND
		CONTROL ROOM
68	A102	SHOWER AND JANITOR'S CLOSET
69	A103	TUNNEL VENTILATION NORTH VENTILATION FACILITY WEST BLOWER FAN
		ROOM, PLANS
70	A104	TUNNEL VENTILATION NORTH VENTILATION FACILITY EXHAUST FAN ROOM AND
		EAST BLOWER FAN ROOM, PLANS
71	A105	TUNNEL ELEVATION RAMP "J" BLOWER FAN ROOM PLAN AND ELEVATION
72	A106	TUNNEL VENTILATION SOUTH VENTILATION FACILITY BLOWER AND EXHAUST
		FAN ROOMS, PLANS
73	A107	TUNNEL VENTILATION SOUTH VENTILATION FACILITIES TUNNEL ELECTRICAL
		ROOM, PLANS

TIPPETTS.ABBETT.McCARTHY.STRATTON
ENGINEERS, ARCHITECTS AND PLANNERS
IN ASSOCIATION WITH:
FLEMING CORPORATION

NO	DESCRIPTION	NAME	DATE
	REVISIONS		

D.C. DEPARTMENT OF PUBLIC WORKS
BUREAU OF TRANSPORTATION CONSTRUCTION SERVICES
DESIGN AND ENGINEERING DIVISION

I-395 CENTER LEG OF THE INNER LOOP
REHABILITATION OF
THE MALL TUNNEL

PROJECT ENG. NM
DESIGNED BY CAM
CHECKED BY BD
DRAWN BY FK
PROJECT MGR. IB

DIVISION CHIEF
DATE
FILE 1142

INDEX OF DRAWINGS

SHEET NO.	DRAWING NO.	DESCRIPTION

ELECTRICAL

SHEET NO.	DRAWING NO.	DESCRIPTION
74	E101	NORTH VENTILATION FACILITIES, POWER DISTRIBUTION, ONE LINE DIAGRAM "A".
75	E102	NORTH VENTILATION FACILITIES, POWER DISTRIBUTION, ONE LINE DIAGRAM "B".
76	E104	NORTH VENTILATION FACILITIES, GROUNDING SYSTEM, PLAN.
77	E105	NORTH VENTILATION FACILITIES, TUNNEL ELECTRICAL AND CONTROL ROOMS,
		EQUIPMENT PLAN.
78	E106	NORTH VENTILATION FACILITIES, TUNNEL ELECTRICAL AND CONTROL ROOMS,
		CONDUIT PLAN.
79	E108	NORTH VENTILATION FACILITIES, SWITCHBOARD DETAILS.
80	E109	NORTH VENTILATION FACILITIES, TUNNEL ELECTRICAL AND CONTROL ROOMS,
		EQUIPMENT ELEVATIONS.
81	E110	NORTH VENTILATION FACILITIES, TUNNEL ELECTRICAL AND CONTROL ROOMS,
		EQUIPMENT ELEVATIONS.
82	E111	NORTH VENTILATION FACILITIES, TUNNEL ELECTRICAL AND CONTROL ROOMS,
		EQUIPMENT ELEVATIONS.
83	E112	NORTH VENTILATION FACILITIES, PANEL DETAILS AND SCHEDULES.
84	E113	NORTH VENTILATION FACILITIES, ROADWAY LIGHTING PANEL SCHEDULES.
85	E114	NORTH VENTILATION FACILITIES, ROADWAY LIGHTING PANEL SCHEDULES.
86	E115	NORTH VENTILATION FACILITIES, ROADWAY LIGHTING PANEL SCHEDULES.
87	E119	NORTH VENTILATION FACILITIES, ROADWAY LIGHTING PANEL SCHEDULES.
88	E122	SOUTH VENTILATION FACILITIES, POWER DISTRIBUTION, ONE LINE DIAGRAM "A".
89	E123	SOUTH VENTILATION FACILITIES, POWER DISTRIBUTION, ONE LINE DIAGRAM "B".
90	E125	SOUTH VENTILATION FACILITIES, GROUNDING SYSTEM, PLAN.
91	E126	SOUTH VENTILATION FACILITIES, & TUNNEL CO ANALYZER ROOM,
		EQUIPMENT PLAN.
92	E127	SOUTH VENTILATION FACILITIES, TUNNEL ELECTRICAL ROOM,
		CONDUIT PLAN.
93	E129	SOUTH VENTILATION FACILITIES, SWITCHBOARD DETAILS.
94	E130	SOUTH VENTILATION FACILITIES, TUNNEL ELECTRICAL ROOM, EQUIPMENT
		ELEVATIONS.
95	E131	SOUTH VENTILATION FACILITIES, TUNNEL ELECTRICAL ROOM, EQUIPMENT
		ELEVATIONS.
96	E132	SOUTH VENTILATION FACILITIES, PANEL DETAILS AND SCHEDULES.
97	E133	SOUTH VENTILATION FACILITIES, ROADWAY LIGHTING PANEL SCHEDULES.
98	E134	SOUTH VENTILATION FACILITIES, ROADWAY LIGHTING PANEL SCHEDULES.
99	E135	SOUTH VENTILATION FACILITIES, ROADWAY LIGHTING PANEL SCHEDULES.
100	E139	SOUTH VENTILATION FACILITIES, ROADWAY LIGHTING PANEL SCHEDULES.
101	E140	SOUTH VENTILATION FACILITIES, ROADWAY LIGHTING PANEL SCHEDULES.
102	E138	SOUTH VENTILATION FACILITIES, TUNNEL CONDUIT PLAN AND DETAILS
103	E143	ROADWAY LIGHTING & VENTILATION POWER AND CONTROL BLOCK DIAGRAMS
104	E116	ROADWAY LIGHTING CONTROL, DIAGRAM AND DETAILS.
105	E117	ROADWAY LIGHTING CONTROL, TYPICAL WIRING.
106	E144	ROADWAY LIGHTING PLAN.
107	E145	ROADWAY LIGHTING PLAN.
108	E146	ROADWAY LIGHTING PLAN.
109	E147	ROADWAY LIGHTING PLAN.
110	E148	ROADWAY LIGHTING PLAN.
111	E149	ROADWAY LIGHTING PLAN.
112	E150	ROADWAY LIGHTING PLAN.
113	E151	ROADWAY LIGHTING PLAN.
114	E152	ROADWAY LIGHTING SECTIONS.
115	E153	ROADWAY LIGHTING SECTIONS.
116	E155	ROADWAY LIGHTING SECTIONS.
117	E168	ROADWAY LIGHTING, TERMINAL BOX DETAILS.
118	E154	ROADWAY LIGHTING DETAILS.
119	E156	ROADWAY LIGHTING, GENERAL ARRANGEMENT.
120	E157	ROADWAY LIGHTING, TYPICAL WIRING DIAGRAMS.
121	E201	PROGRAMMABLE CONTROLLER, REMOTE TERMINAL UNITS, DETAILS.
122	E202	VENTILATION SYSTEM, PROGRAMMABLE CONTROLLER I/O SCHEDULES
123	E202A	VENTILATION SYSTEM, PROGRAMMABLE CONTROLLER I/O SCHEDULES
124	E202B	VENTILATION SYSTEM, PROGRAMMABLE CONTROLLER I/O SCHEDULES
125	E203	VENTILATION SYSTEM, FAN INTERCONNECTION DIAGRAM, PLC RTU NO. 1
126	E203A	VENTILATION SYSTEM, FAN INTERCONNECTION DIAGRAM, PLC RTU NO. 2 & 3
127	E204	CONTROL CONSOLE LAYOUT.
128	E205	CONTROL CONSOLE MIMIC.
129	E206	CONTROL CONSOLE, ALARM ANNUNCIATOR SCHEDULE AND DETAILS.
130	E220	CONTROL CONSOLE, LAYOUT AND DETAILS.
131	E221	CONTROL CONSOLE, WIRING AND DETAILS.
132	E207	VENTILATION SYSTEM, BLOCK DIAGRAM.
133	E208	CONTROL SYSTEM, CONTROL POWER SCHEMATIC.
134	E211	NORTH VENTILATION FACILITIES, CONTROLLER SCHEMATIC, 3 SPEED
		FANS (BLOWER).
135	E212	NORTH VENTILATION FACILITIES, CONTROLLER SCHEMATIC, 3 SPEED
		FANS (EXHAUST).
136	E213	NORTH VENTILATION FACILITIES, CONTROLLER SCHEMATIC, 2 SPEED FANS.
137	E214	NORTH VENTILATION FACILITIES, CONTROLLER SCHEMATIC, 1 SPEED FANS.
138	E215	SOUTH VENTILATION FACILITIES, CONTROLLER SCHEMATIC, 3 SPEED FANS.
139	E216	NORTH VENTILATION FACILITIES, EXHAUST FAN ROOMS, CONDUIT PLAN.
140	E218	VENTILATION FACILITIES, SWITCHGEAR REHABILITATION
141	E219	VENTILATION FACILITIES, FAN CONTROLLER AND MOTOR REHABILITATION
142	E301	OVERHEIGHT VEHICLE DETECTION SYSTEM, PLAN AND DETAILS.
		AIR RIGHT TUNNEL – NORTH PORTAL APPROACH.
143	E302	OVERHEIGHT VEHICLE DETECTION SYSTEM, PLAN AND DETAILS.
		MALL TUNNEL – NORTH PORTAL APPROACH.
144	E303	OVERHEIGHT VEHICLE DETECTION SYSTEM, PLAN AND DETAILS.
		MALL TUNNEL – SOUTH PORTAL APPROACH.
145	E304	VARIABLE MESSAGE SIGNS AND LANE CONTROL SIGNALS, PLANS AND DETAILS.
146	E306	VARIABLE MESSAGE SIGNS, MOTION LOOP DETECTORS AND LANE CONTROL
		SIGNALS, PLAN DIAGRAMS AND DETAILS.
147	E307	OVERHEIGHT VEHICLE DETECTION SYSTEM. TYPICAL WIRING AND CONTROL
		DIAGRAMS.
148	E308	TUNNEL SIGN LIGHTING DETAILS.
149	E309	ROADWAY SIGN LIGHTING DETAILS.
150	E310	ROADWAY SIGN LIGHTING DETAILS.
151	E311	ROADWAY SIGN LIGHTING CONNECTION DETAILS.
152	E401	TUNNEL FIRE ALARM HEAT SENSOR, PLAN AND SCHEDULE.
153	E404	TUNNEL FIRE ALARM, HEAT SENSOR, SECTIONS, DETAILS AND DIAGRAMS.
154	E402	NORTH VENTILATION FACILITIES, FIRE ALARM SYSTEM, PLAN AND DETAILS.
155	E403	SOUTH VENTILATION FACILITIES, FIRE ALARM SYSTEM, PLAN AND DETAILS.
156	E405	EMERGENCY REPORTING SYSTEM, PLAN AND DETAILS.
157	E406	TELEPHONE HYDRANT HEATER AND VEHICLE DETECTOR NICHE ENCLOSURE
		REHABILITATION.
158	E409	HIGHWAY DEP. RADIO SYSTEM, BLOCK DIAGRAM.
159	E410	HIGHWAY DEP. RADIO SYSTEM, EQUIPMENT INSTALLATION.
160	E408	HIGHWAY DEP. RADIO SYSTEM, EXISTING EQUIPMENT MODIFICATION.
161	E414	CLOSED CIRCUIT TV, PLAN AND SCHEDULE.
162	E415	CLOSED CIRCUIT TV, SECTIONS AND DETAILS.
163	E416	CLOSED CIRCUIT TV, DIAGRAMS.
164	E417	CLOSED CIRCUIT TV, CONTROL CONSOLE DETAILS.
165	E501	HYDRANT HEATING SYSTEM, PLAN AND DETAILS.
166	E503	AIR DUCT LIGHTING SYSTEM, PLAN AND DETAILS.
167	E504	NORTH VENTILATION FACILITIES, FAN, ELECTRICAL AND CONTROL ROOMS,
		LIGHTING PLAN.
168	E505	SOUTH VENTILATION FACILITIES, FAN ROOMS, LIGHTING PLAN.
169	E508	SOUTH VENTILATION FACILITIES, ELECTRICAL ROOM, LIGHTING PLAN.
170	E511	MISCELLANEOUS CONDUITS PLAN, SECTIONS AND DETAILS.
171	E512	MISCELLANEOUS CONDUITS PLAN, SECTIONS AND DETAILS.
172	E513	MISCELLANEOUS CONDUITS PLAN, SECTIONS AND DETAILS.
173	E514	MISCELLANEOUS CONDUITS PLAN, SECTIONS AND DETAILS.
174	E515	MISCELLANEOUS CONDUITS PLAN, SECTIONS AND DETAILS.
175	E516	MISCELLANEOUS CONDUITS PLAN, SECTIONS AND DETAILS.
176	E517	MISCELLANEOUS CONDUITS PLAN, SECTIONS AND DETAILS.
177	E518	MISCELLANEOUS CONDUITS PLAN, SECTIONS AND DETAILS.
178	E521	DEMOLITION PLAN, NORTH VENTILATION FACILITIES, TUNNEL ELECTRICAL
		AND CONTROL ROOMS.
179	E522	DEMOLITION PLAN, SOUTH VENTILATION FACILITIES, TUNNEL ELECTRICAL ROOM.
180	E523	DEMOLITION PLAN, TUNNEL LIGHTING.
181	E524	DEMOLITION PLAN, TUNNEL LIGHTING.
182	E525	DEMOLITION PLAN, TUNNEL LIGHTING.
183	E526	DEMOLITION PLAN, TUNNEL LIGHTING AND MANHOLES.
184	E527	DEMOLITION PLAN, TUNNEL LIGHTING AND MANHOLES.
185	E528	DEMOLITION PLAN, TUNNEL LIGHTING AND MANHOLES.
186	E529	DEMOLITION PLAN, TUNNEL LIGHTING AND MANHOLES.
187	E530	DEMOLITION PLAN, TUNNEL LIGHTING AND MANHOLES.
188	E531	DEMOLITION PLAN, MANHOLES AND DUCTS.
189	E532	ROADWAY LIGHTING, NORTHBOUND LANES, CONSTRUCTION SEQUENCE.
190	E533	ROADWAY LIGHTING, SOUTHBOUND LANES, CONSTRUCTION SEQUENCE.
191	E551	AIR RIGHTS TUNNEL, KEY PLAN, GARAGE LEVEL.
192	E552	AIR RIGHTS TUNNEL, ELECTRICAL EQUIPMENT ROOM, EQUIPMENT PLAN.
193	E553	AIR RIGHTS TUNNEL, ONE LINE DIAGRAM, VENTILATION AND AUXILIARY POWER.

MECHANICAL

SHEET NO.	DRAWING NO.	DESCRIPTION
194	M001	CARBON MONOXIDE DETECTION, PLAN.
195	M002	CARBON MONOXIDE DETECTION, DETAILS.
196	M003	NORTH VENTILATION FACILITY DAMPER DOOR REPLACEMENT.
197	M004	NORTH ELECTRICAL ROOM VENTILATION AND AIRCONDITIONING.
198	M005	SOUTH ELECTRICAL ROOM VANTILATION AND CONTROL DIAGRAMS.
199	M006	DAMPER DOOR. POWER & CONTROL DETAILS.

MISCELLANEOUS

SHEET NO.	DRAWING NO.	DESCRIPTION
199A	——	REPAIR OF MASSACHUSETTS AVE. & H STREET BRIDGE – PLAN 2
199B	——	REPAIR OF MASSACHUSETTS AVE. & H STREET BRIDGE – PLAN 3
199C	——	REPAIR OF MASSACHUSETTS AVE. & H STREET BRIDGE – PLAN 4

TIPPETTS.ABBETT.McCARTHY.STRATTON
ENGINEERS, ARCHITECTS AND PLANNERS
IN ASSOCIATION WITH:
FLEMING CORPORATION

NO	DESCRIPTION	NAME	DATE

REVISIONS

D.C. DEPARTMENT OF PUBLIC WORKS
BUREAU OF TRANSPORTATION CONSTRUCTION SERVICES
DESIGN AND ENGINEERING DIVISION

I-395 CENTER LEG OF THE INNER LOOP
REHABILITATION OF
THE MALL TUNNEL

PROJECT ENG. NM
DESIGNED BY NM
CHECKED BY JCM
DRAWN BY MZ
PROJECT MGR. IB

DIVISION CHIEF
DATE
FILE 1142

INDEX OF DRAWINGS

F.H.W.A. REG. NO.	STATE	FED AID PROJECT NO.	SHEET NO.	TOTAL SHEETS
3	D.C.	IR-395-1(150)	6	199

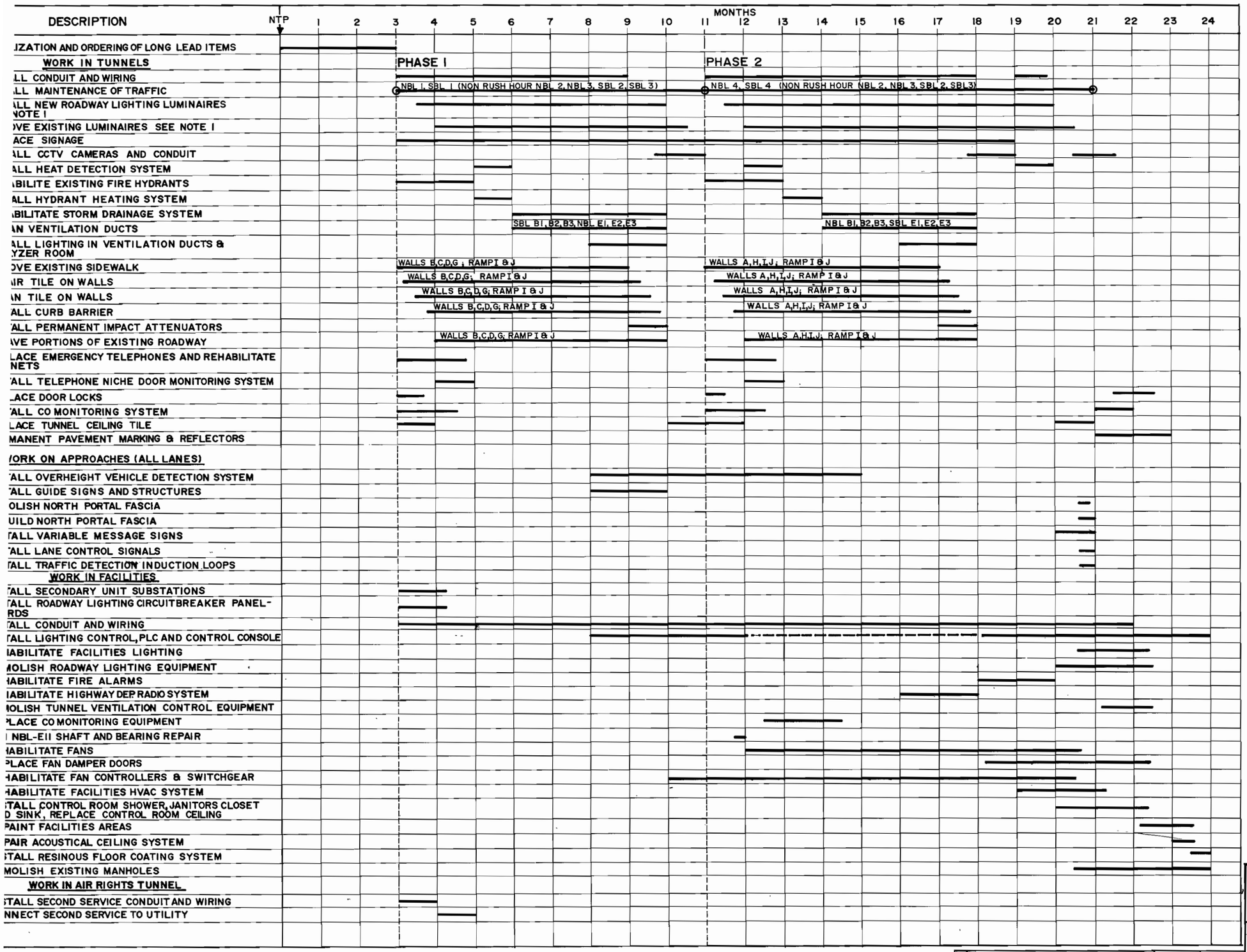

NOTES:

1. FOR DETAILED SEQUENCE OF TUNNEL ROADWAY LIGHTING INSTALLATION SEE DRAWINGS E532 AND E533.
2. FOR DETAILED MAINTENANCE OF TRAFFIC SEE DRAWINGS C134 THROUGH C145.

TIPPETTS·ABBETT·McCARTHY·STRATTON
ENGINEERS, ARCHITECTS AND PLANNERS
IN ASSOCIATION WITH

NO.	DESCRIPTION	NAME	DATE

D.C. DEPARTMENT OF PUBLIC WORKS
BUREAU OF TRANSPORTATION CONSTRUCTION SERVICES
DESIGN AND ENGINEERING DIVISION

I-395 CENTER LEG OF THE INNER LOOP
REHABILITATION OF
THE MALL TUNNEL

PROJECT ENG. G.M.
DESIGNED BY J.H.M.
CHECKED BY G.M.
DRAWN BY Y.B.
PROJECT MGR. I.B.

CONSTRUCTION SCHEDULE

DIVISION CHIEF
DATE
FILE 1142

F.H.W.A. REG. NO.	STATE	FED AID PROJECT NO.	SHEET NO.	TOTAL SHEETS
3	D.C.	IR-395-1(150)	7	199

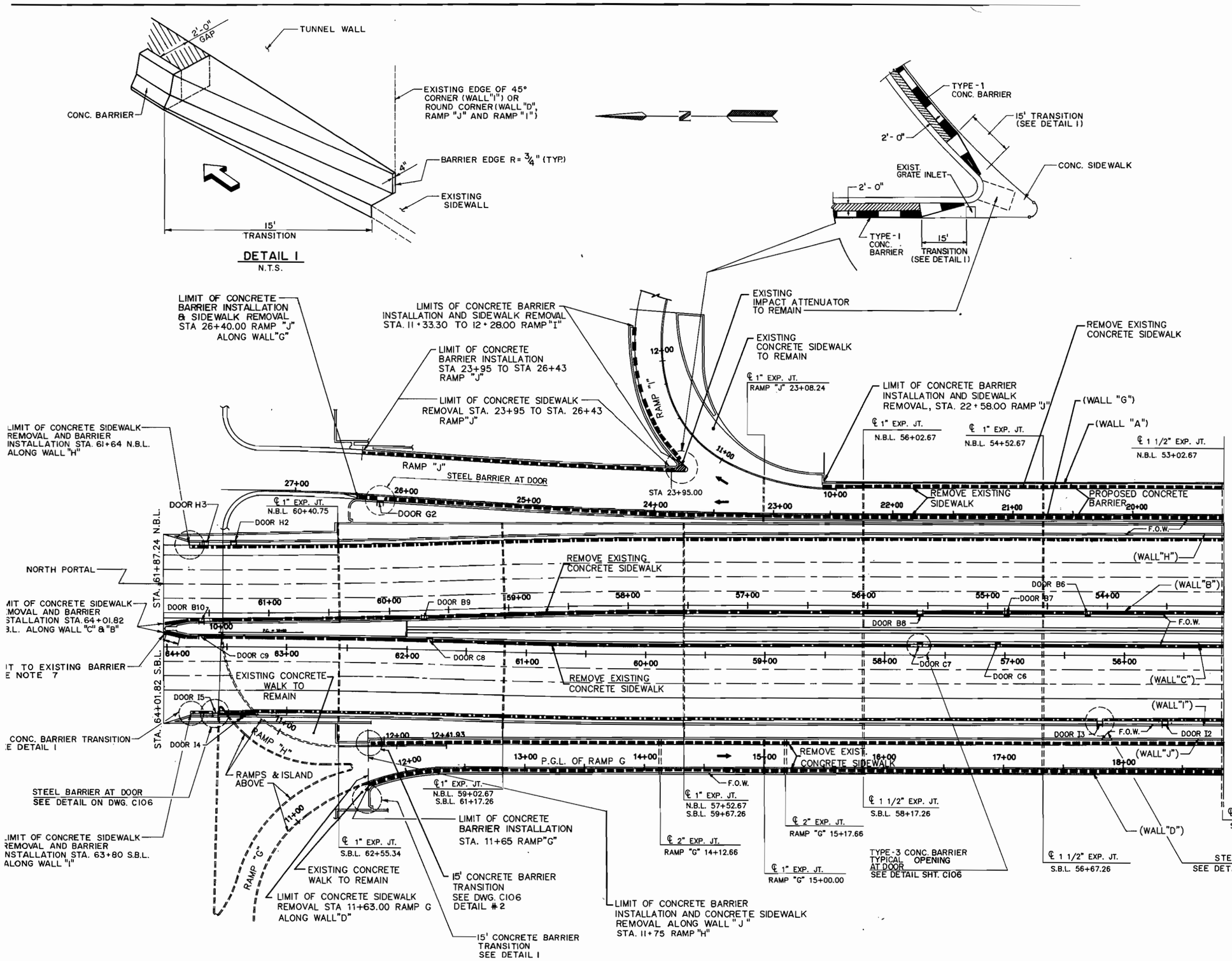

NOTES:

1. FOR SIDEWALK REMOVAL SCHEDULE SEE DWG C102.
2. FOR SCHEDULE OF CONCRETE BARRIERS SEE DWG C103.
3. FOR GENERAL NOTES SEE DWG C104.
4. FOR SCHEDULE OF DOOR LOCATIONS SEE DWG C103.
5. FINAL LANE CONFIGURATIONS SEE PAVEMENT MARKING PLAN. (DWG. C144 THROUGH C147)
6. FOR CONCRETE BARRIER CONSTRUCTION REQUIREMENTS AT DOORS, SEE DWG. C106
7. CONCRETE BARRIER TO ABUT TO EXISTING CONCRETE BARRIER. PROVIDE BOND SEPARATOR.

LEGEND

	PROPOSED 1'-6" CONCRETE BARRIER TYPE-1 (1'-6" ± PARTIAL SIDEWALK REMOVAL REQUIRED)
	PROPOSED 1'-6" CONCRETE BARRIER TYPE-2 (0'-6" ± SIDEWALK EXTENSION REQUIRED)
	PROPOSED 1'-6" CONCRETE BARRIER TYPE-3 (1'-6" ± SIDEWALK REMOVAL REQUIRED)
	PROPOSED 1'-6" CONCRETE BARRIER TYPE-4 (SIDEWALK REMOVAL AND/OR EXTENSION REQ'D.)
	CONCRETE WALL
F.O.W.	FACE OF EXISTING WALL

SCALE: 1"=40'

TIPPETTS.ABBETT.McCARTHY.STRATTON
ENGINEERS, ARCHITECTS AND PLANNERS
IN ASSOCIATION WITH:

NO	DESCRIPTION	NAME	DATE

D.C. DEPARTMENT OF PUBLIC WORKS
BUREAU OF TRANSPORTATION CONSTRUCTION SERVICES
DESIGN AND ENGINEERING DIVISION

I-395 CENTER LEG OF THE INNER LOOP REHABILITATION OF
THE MALL TUNNEL

TUNNEL CURB BARRIERS
SIDEWALK REMOVAL

PROJECT ENG. GM
DESIGNED BY RA
CHECKED BY GM
DRAWN BY FK
PROJECT MGR. IB
DIVISION CHIEF
DATE
FILE 1142

F.H.W.A. REG. NO.	STATE	FED AID PROJECT NO.	SHEET NO.	TOTAL SHEETS
3	D.C.	IR-395-1(150)	8	199

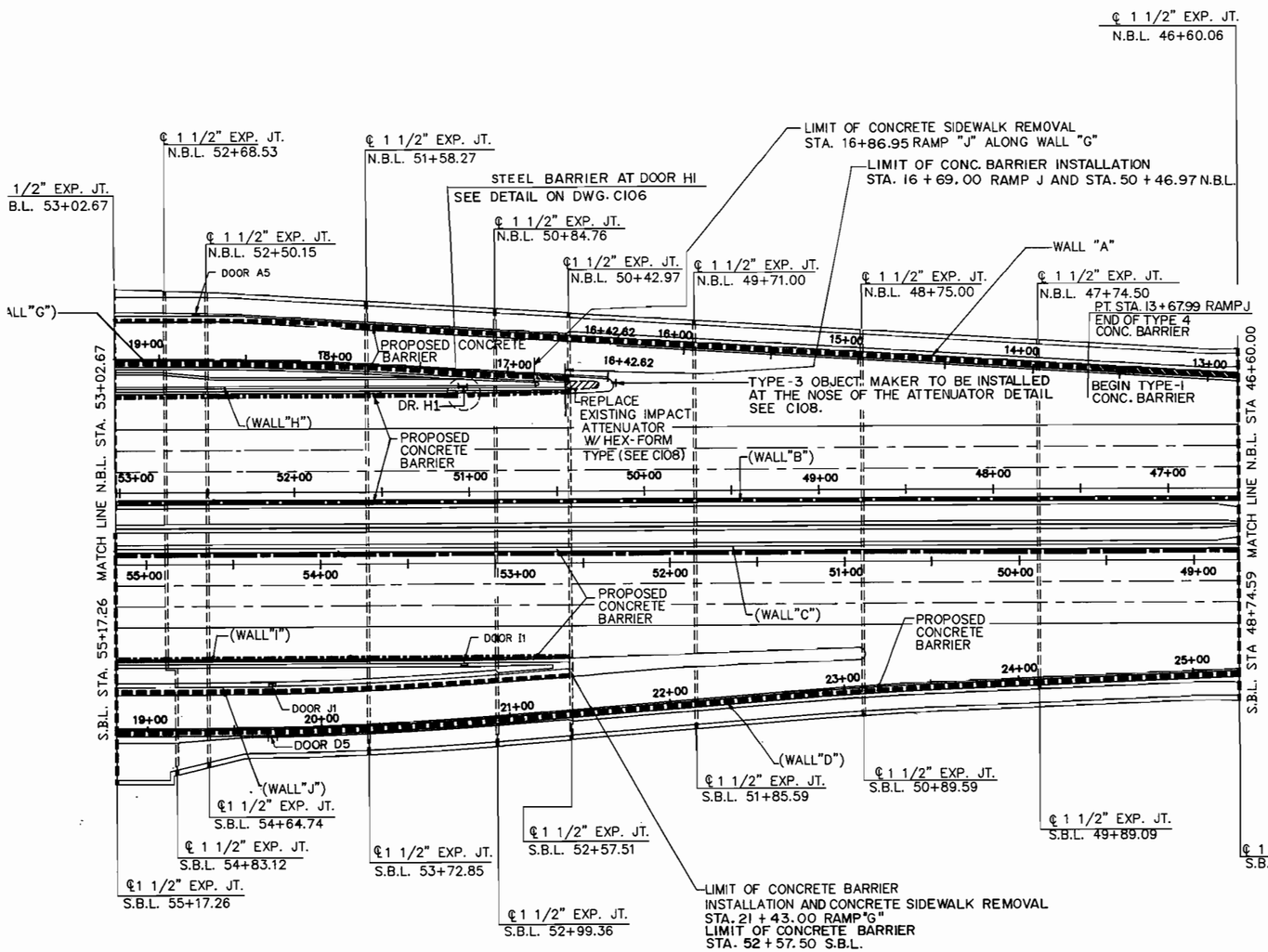

SIDEWALK/CURB REMOVAL SCHEDULE

(SIDEWALK / CURB EXTENSION INFORMATION MARKED WITH *, ARE ALSO PROVIDED AT REMARKS COLUMN OF THIS SCHEDULE.)

ALONG WALL	STATION FROM	STATION TO	LENGTH (ft)	WIDTH OF SIDEWALK/CURB	AVG. WIDTH OF SIDEWALK/CURB (ft.)	SURFACE AREA (sq.ft.)	REMARKS
A	STA.16+81.00 RAMP 4	STA.16+93.00 RAMP 4	12.00	0'-0" TO 1'-6"	0.75	9.0	12'-0" SIDEWALK TAPER
A	STA.16+93.00 RAMP 4	STA.21+09.99 RAMP 4	417.0	1'-6"	1.5	625.5	
A	STA.21+09.00 RAMP 4	STA.22+28.66 RAMP 4	118.67	1'-6" TO 0'-0"	0.75	* 89.0	* SIDEWALK EXTENSION FROM STA. 22+28.66 RAMP 4 TO STA. 22+68.22 RAMP 4
A	STA.11+05.27 RAMP J	STA.13+67.99 RAMP J	262.70	0'-0" TO 1'-6"	0.75	* 197.0	* SIDEWALK EXTENSION FROM STA. 10+17.70 RAMP J TO STA. 11+05.27 RAMP J
A	STA.13+67.99 RAMP J	STA.22+58.00 RAMP J	890.00	1'-6"	1.5	1335.0	
G	STA.16+86.95 RAMP J	STA.26+40.00 RAMP J	953.05	1'-6"	1.5	1430.0	
B	STA.28+67.00 N.B.L.	STA.61+87.24 N.B.L.	3320.24	1'-6"	1.5	4980.4	
C	STA.31+15.00 S.B.L.	STA.64+01.82 S.B.L.	3286.82	1'-6"	1.5	4930.2	
J	STA. 11+50.26 RAMP H	STA.21+43.00 RAMP G	1000.0	1'-6"	1.5	1500.0	STA.12+36.58 RAMP G = STA.12+44.30 RAMP H
EAST WALL OF RAMP "3"	STA.15+55.02 RAMP 3	STA.16+20 RAMP 3	64.98	1'-6"	1.5	* 97.5	* SIDEWALK EXTENSION FROM STA. 15+34 RAMP 3 TO STA. 15+55.02-RAMP 3
E	STA. 30+40 S.B.L.	STA. 31+26.38 S.B.L.	86.38	—	—	* —	* SIDEWALK EXTENSION
D	STA.11+63.00 RAMP G	STA.11+75.00 RAMP G	12.00	0'-0" TO 1'-6"	0.75	9.0	12'-0" SIDEWALK TAPER
D	STA.11+75.00 RAMP G	STA.25+43.09 RAMP G	1368.10	1'-6"	1.5	2052.0	
D	STA.25+43.09 RAMP G	STA.27+67.35 RAMP G	224.30	1'-6" TO 0'-0"	0.75	* 168.2	* SIDEWALK EXTENSION FROM STA. 27+67.35 RAMP G TO STA. 28+42.15 RAMP G
D	STA. 40+27.12 S.B.L.	STA.37+90.42 S.B.L.	236.70	0'-0" TO 1'-6"	0.75	* 177.5	* SIDEWALK EXTENSION FROM STA. 40+27.12 S.B.L. TO STA. 41+06.10 S.B.L.
D	STA.37+90.42 S.B.L.	STA.15+38.00 RAMP 3	676.34	1'-6"	1.5	1014.5	STA. 36+52.08 SBL= STA. 10+00.00 RAMP 3
D	STA.15+38.00 RAMP 3	STA.15+50.00 RAMP 3	12.00	1'-6" TO 0'-0"	0.75	9.0	12'-0" SIDEWALK TAPER
EAST WALL OF RAMP "J"	STA.23+95.00 RAMP J	STA.26+43.00 RAMP J	248.00	1'-6"	1.5	372.0	
NORTH WALL OF RAMP "I"	STA.11+33.30 RAMP I	STA.12+28.00 RAMP I	94.70	1'-6"	1.5	142.5	

NOTES:

1. FOR SCHEDULE OF CONCRETE BARRIERS SEE DWG C103.
2. FOR GENERAL NOTES SEE DWG C104.
3. FOR SCHEDULE OF DOOR LOCATIONS SEE DWG C103.
4. FINAL LANE FIGURATIONS SEE PAVEMENT MARKING PLAN. (DWG C144 THROUGH C147)
5. FOR CONCRETE BARRIER CONSTRUCTION REQUIREMENTS AT DOORS, SEE DWG. C106.
6. FOR SIDEWALK TAPER DETAILS, SEE DETAIL A, DWG. C104.

LEGEND

	PROPOSED 1'-6" CONCRETE BARRIER TYPE-1 (1'-6"± PARTIAL SIDEWALK REMOVAL REQUIRED)
	PROPOSED 1'-6" CONCRETE BARRIER TYPE-2 (0'-6"± SIDEWALK EXTENSION REQUIRED)
	PROPOSED 1'-6" CONCRETE BARRIER TYPE-3 (1'-6"± SIDEWALK REMOVAL REQUIRED)
	PROPOSED 1'-6" CONCRETE BARRIER TYPE-4 (SIDEWALK REMOVAL AND/OR EXTENSION REQ'D)
	CONCRETE WALL
F. O. W.	FACE OF EXISTING WALL

SCALE: 1"=40'

TIPPETTS.ABBETT.McCARTHY.STRATTON
ENGINEERS, ARCHITECTS AND PLANNERS
IN ASSOCIATION WITH:
FLEMING CORPORATION

NO	DESCRIPTION	NAME	DATE

REVISIONS

D.C. DEPARTMENT OF PUBLIC WORKS
BUREAU OF TRANSPORTATION CONSTRUCTION SERVICES
DESIGN AND ENGINEERING DIVISION

I-395 CENTER LEG OF THE INNER LOOP
REHABILITATION OF
THE MALL TUNNEL

TUNNEL CURB BARRIERS, SIDEWALK REMOVAL

PROJECT ENG. GM
DESIGNED BY RA
CHECKED BY GM
DRAWN BY FK
PROJECT MGR. IB

DIVISION CHIEF
DATE
FILE 1142

F.H.W.A. REG. NO.	STATE	FED AID PROJECT NO.	SHEET NO.	TOTAL SHEETS
3	D.C.	IR-395-1(150)	9	199

SCHEDULE OF CONCRETE BARRIER INSTALLATION

BARRIER TYPE	ALONG	STATION FROM	STATION TO	LENGTH(FT)
1	WALL "D"	STA. 11+75.00 RAMP"G"	STA. 25+43.09 RAMP"G"	2051
		STA. 37+90.42 S.B.L.	STA. 15+50.00 RAMP"3"	
2	"	STA. 28+42.15 RAMP"G"	STA. 41+06.10 S.B.L.	453
4	"	STA. 25+43.09 RAMP"G"	STA. 28+42.15 RAMP"G"	615
		STA. 41+06.10 S.B.L.	STA. 37+90.41 S.B.L.	
1	WALL "A"	STA. 22+58.00 RAMP"J"	STA. 13+67.99 RAMP"J"	1307
		STA. 21+09.99 RAMP"4"	STA. 16+93.00 RAMP"4"	
2	"	STA. 10+17.70 RAMP"J"	STA. 22+68.22 RAMP"4"	916
4	"	STA. 13+67.99 RAMP"J"	STA. 10+17.70 RAMP"J"	509
		STA. 22+68.22 RAMP"4"	STA. 21+09.99 RAMP"4"	

NOTES:

1. FOR SIDEWALK REMOVAL SCHEDULE SEE DWG C102.
2. FOR SCHEDULE OF CONCRETE BARRIERS SEE DWG C103.
3. FOR GENERAL NOTES SEE DWG C104.
4. FINAL LANE FIGURATIONS, SEE PAVEMENT MARKING PLAN (DWG. C144 THROUGH C147)
5. FOR CONCRETE BARRIER CONSTRUCTION REQUIREMENTS AT DOORS, SEE DWG. C106

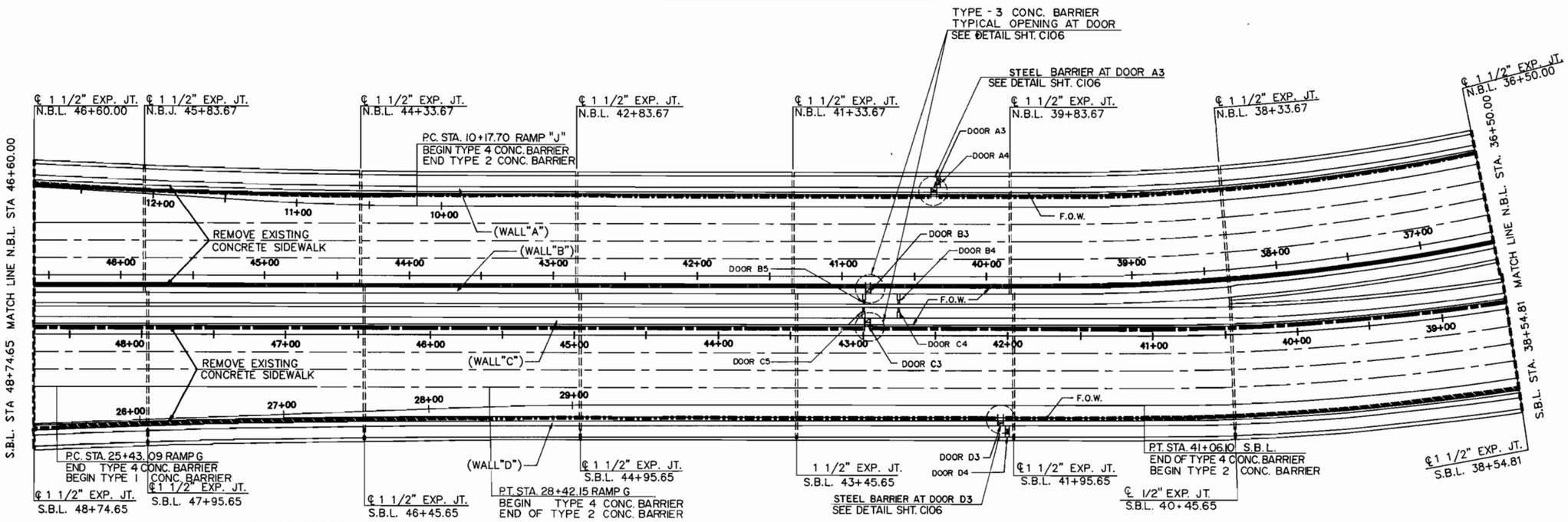

LOCATION OF DOORS

STATION	ALONG WALL	DESIGNATION
STA. 28+64.07 N.B.L.	A	A1
STA. 35+92.53 N.B.L.	A	A2
STA. 40+36.17 N.B.L.	A	A3
STA. 52+56.25 N.B.L.	A	A5
STA. 28+64.33 N.B.L.	B	B1
STA. 35+93.96 N.B.L.	B	B2
STA. 40+82.25 N.B.L.	B	B3
STA. 54+15.67 N.B.L.	B	B6
STA. 54+90.67 N.B.L.	B	B7
STA. 55+55.67 N.B.L.	B	B8
STA. 59+70.72 N.B.L.	B	B9
STA. 61+54.57 N.B.L.	B	B10
STA. 31+11.87 S.B.L.	C	C1
STA. 38+05.28 S.B.L.	C	C2
STA. 42+96.84 S.B.L.	C	C3
STA. 57+05.25 S.B.L.	C	C6

STATION	ALONG WALL	DESIGNATION
STA. 57+70.25 S.B.L.	C	C7
STA. 61+80.36 S.B.L.	C	C8
STA. 63+69.19 S.B.L.	C	C9
STA. 31+11.37 S.B.L.	D	D1
STA. 38+08.02 S.B.L.	D	D2
STA. 42+04.66 S.B.L.	D	D3
STA. 54+27.99 S.B.L.	D	D5
STA. 30+72.83 S.B.L.	E	E1
STA. 60+04.80 N.B.L.	G	G2
STA. 51+03.74 N.B.L.	H	H1
STA. 61+20.76 N.B.L.	H	H2
STA. 53+17.74 S.B.L.	I	I1
STA. 55+65.25 S.B.L.	I	I2
STA. 56+20.25 S.B.L.	I	I3
STA. 63+35.24 S.B.L.	I	I4
STA. 63+68.65 S.B.L.	I	I5
STA. 54+28.01 S.B.L.	J	J1
STA. 61+54.98 N.B.L.	H	H3

SCHEDULE OF CONCRETE BARRIER INSTALLATION

BARRIER TYPE	ALONG	STATION FROM	STATION TO	LENGTH (FT.)
3	WALL "C"	STA. 31+15.00 S.B.L.	STA. 64+01.82 S.B.L.	3287.0
3	WALL "B"	STA. 28+67.00 N.B.L.	STA. 61+87.24 N.B.L.	3320.0
1	WALL "G"	STA. 16+69.00 RAMP "J"	STA. 26+40.00 RAMP"J"	971
1	WALL "J"	STA. 11+50.26 RAMP "H"	STA. 21+43.00 RAMP"G"	1000
2	WALL "I"	STA. 52+57.50 S.B.L.	STA. 64+01.82 S.B.L.	1145
2	WALL "H"	STA. 50+46.97 N.B.L.	STA. 61+87.24 N.B.L.	1140
1	RAMP "J"	STA. 23+95.00 RAMP "J"	STA. 26+43 RAMP"J"	248
1	RAMP "I"	STA. 11+33.30 RAMP "I"	STA. 12+28.00 RAMP"I"	95
2	WALL "E"	STA. 30+40.00 S.B.L.	STA. 31+26.38 S.B.L.	86
1	WALL "R"	STA. 16+21.00 RAMP "3"	STA. 15+35.00 RAMP"3"	86

NOTES

1. GUARD RAIL BARRIER TO BE PROVIDED AT DOOR # A2, A3, D3, D2, H1 AND I3 SEE DETAIL ON DWG. C106
2. TYPE - 3 CONC. BARRIER TYPICAL OPENING AT DOOR # B1, B2, B3, B6, B7, B8, B9, B10, # C1, C2, C3, C6, C7, C8 AND C9 SEE DETAIL ON DWG. C106

LEGEND

	PROPOSED 1'-6" CONCRETE BARRIER TYPE-1 (1'-6" ± PARTIAL SIDEWALK REMOVAL REQUIRED)
	PROPOSED 1'-6" CONCRETE BARRIER TYPE-2 (0'-6" ± SIDEWALK EXTENSION REQUIRED)
	PROPOSED 1'-6" CONCRETE BARRIER TYPE-3 (1'-6" ± SIDEWALK REMOVAL REQUIRED)
	PROPOSED 1'-6" CONCRETE BARRIER TYPE-4 (SIDEWALK REMOVAL AND/OR EXTENSION REQUIRED)
	CONCRETE WALL
F.O.W.	FACE OF EXISTING WALL

SCALE: 1"=40'

TIPPETTS.ABBETT.McCARTHY.STRATTON
ENGINEERS, ARCHITECTS AND PLANNERS
IN ASSOCIATION WITH:
FLEMING CORPORATION

NO	DESCRIPTION	NAME	DATE

REVISIONS

D.C. DEPARTMENT OF PUBLIC WORKS
BUREAU OF TRANSPORTATION CONSTRUCTION SERVICES
DESIGN AND ENGINEERING DIVISION

I-395 CENTER LEG OF THE INNER LOOP REHABILITATION OF
THE MALL TUNNEL

TUNNEL CURB BARRIERS, SIDEWALK REMOVAL

PROJECT ENG. GM
DESIGNED BY RA
CHECKED BY GM
DRAWN BY FK
PROJECT MGR. IB

DIVISION CHIEF
DATE
FILE 1142

REG. NO.	STATE	PROJECT NO.	SHEET NO.	TOTAL SHEETS
3	D.C.	IR-395-1(150)	10	199

ENERAL NOTES:

1. THE CONTRACTOR SHALL REMOVE EXISTING CONCRETE SIDEWALK AND/OR PAVEMENT TO THE TOP OF CONCRETE BASE AS SHOWN ON DWG. C105 AND/OR AS DIRECTED BY THE ENGINEER.
2. THE CONTRACTOR SHALL INSTALL THE NEW CONCRETE BARRIERS ALONG THE WALLS OF THE TUNNEL AS SHOWN ON THE PLANS. EXISTING TILE ON THE TUNNEL WALLS SHALL REMAIN IN PLACE. THE CONTRACTOR SHALL REPAIR, CLEAN OR REPLACE DAMAGED TILE BEFORE CONSTRUCTION OF CONCRETE BARRIERS IN THE TUNNEL IN AREAS NOTED ON TABULATION SEE SPECIAL PROVISIONS.
3. THE CONTRACTOR SHALL PROVIDE OPENINGS AT DOORS AS INDICATED ON SHEET C106.
4. REPLACE ALL DOOR LOCKSETS WITH NEW LOCKSETS, KEY NUMBER 3. WHERE STEEL DOORS AND FRAMES HAVE RUSTED, SAND, REPRIME AND REPAINT. DO NOT PAINT ALUMINIUM DOORS OR FRAMES. WHERE HINGES OR OTHER HARDWARE IS DEFECTIVE, REPLACE WITH NEW HARDWARE TO MATCH EXISTING
5. FOR LOCATION DETAILS OF VERTICAL AND HORIZONTAL AIR PORTS, DOORS AND EXPANSION JOINTS CONTRACTOR SHALL REFER TO PLANS OF DISTRICT OF COLUMBIA, DEPARTMENT OF HIGHWAYS AND TRAFFIC, CENTER. LEG OF THE INNER LOOP "D" STREET S.W. TO "D" STREET N.W. MALL TUNNEL – CONTRACT NO. 7, FEDERAL AID PROJECT NO. I-95-1(76)2.
6. FOR BARRIER TRANSITION DETAILS AT ENDS OF WALLS SEE SHEETS C106
7. THE CONTRACTOR HAS THE OPTION OF USING CAST-IN-PLACE OR PRECAST CHORDED (TANGENT) CONCRETE BARRIER CONSTRUCTION OR A COMBINATION OF BOTH. THE CONTRACTOR MUST SUBMIT HIS PROPOSED METHOD OF CONSTRUCTION WITH SHOP DRAWINGS TO THE ENGINEER FOR APPROVAL.
8. WHERE PRECAST CONCRETE BARRIER UNITS ARE USED, THE CONTRACTOR SHALL GROUT THE SPACE BETWEEN THE WALL TILE AND THE CONCRETE BARRIER WITH NON SHRINK GROUT. THE SPACE BETWEEN THE BARRIER AND THE WALL SHALL BE NO GREATER THAN 2".
9. THE CONTRACTOR SHALL ANCHOR THE BARRIER AS PER DETAILS SHOWN ON SHEET C105 OR APPROVED EQUAL.
10. THE CONTRACTOR SHALL CONSTRUCT THE CONCRETE BARRIERS IN ACCORDANCE WITH THE APPROVED SEQUENCE OF CONSTRUCTION. AT NO TIME SHALL THE CONTRACTOR BLOCK THE TRAVELED PORTION OF THE ROAD. THE TUNNEL MUST REMAIN OPEN TO TRAFFIC IN BOTH DIRECTIONS AT ALL TIMES.
11. THE CONTRACTOR SHALL INFORM THE TUNNEL STAFF OF ANY DOORS OR VENTS THAT WILL BE TEMPORARILY OUT OF SERVICE. THE CONTRACTOR MUST HAVE THE APPROVAL OF THE ENGINEER FOR DOORS WHICH ARE REQUIRED TO BE TEMPORARILY BLOCKED.
12. AT NO TIME SHALL THE CONTRACTOR BLOCK ACCESS TO FIRE EQUIPMENT INSIDE OR OUTSIDE THE TUNNEL.
13. FOR FINAL PAVEMENT MARKINGS, SEE DWG. C144 THRU C147.

LEGEND	
	PROPOSED 1'-6" CONCRETE BARRIER TYPE - 1 (1'-6" ± PARTIAL SIDEWALK REMOVAL REQUIRED)
	PROPOSED 1'-6" CONCRETE BARRIER TYPE - 2 (0'-6" ± SIDEWALK EXTENSION REQUIRED)
	PROPOSED 1'-6" CONCRETE BARRIER TYPE - 3 (1'-6" ± SIDEWALK REMOVAL REQUIRED)
	PROPOSED 1'-6" CONCRETE BARRIER TYPE-4 (SIDEWALK REMOVAL AND/OR EXTENSION REQ'D.)
	CONCRETE WALL
F.O.W.	FACE OF EXIST. WALL

NOTES:

1. FOR SIDEWALK REMOVAL SCHEDULE SEE DWG. C102.
2. FOR SCHEDULE OF CONCRETE BARRIERS SEE DWG. C103.
3. FOR SCHEDULE OF DOOR LOCATIONS SEE DWG. C103.
4. FINAL LANE FIGURATIONS SEE PAVEMENT MARKING PLAN (DWG. C144 THROUGH C147)
5. FOR CONC. BARRIER CONSTRUCTION REQUIREMENTS AT DOORS, SEE DWG. C106

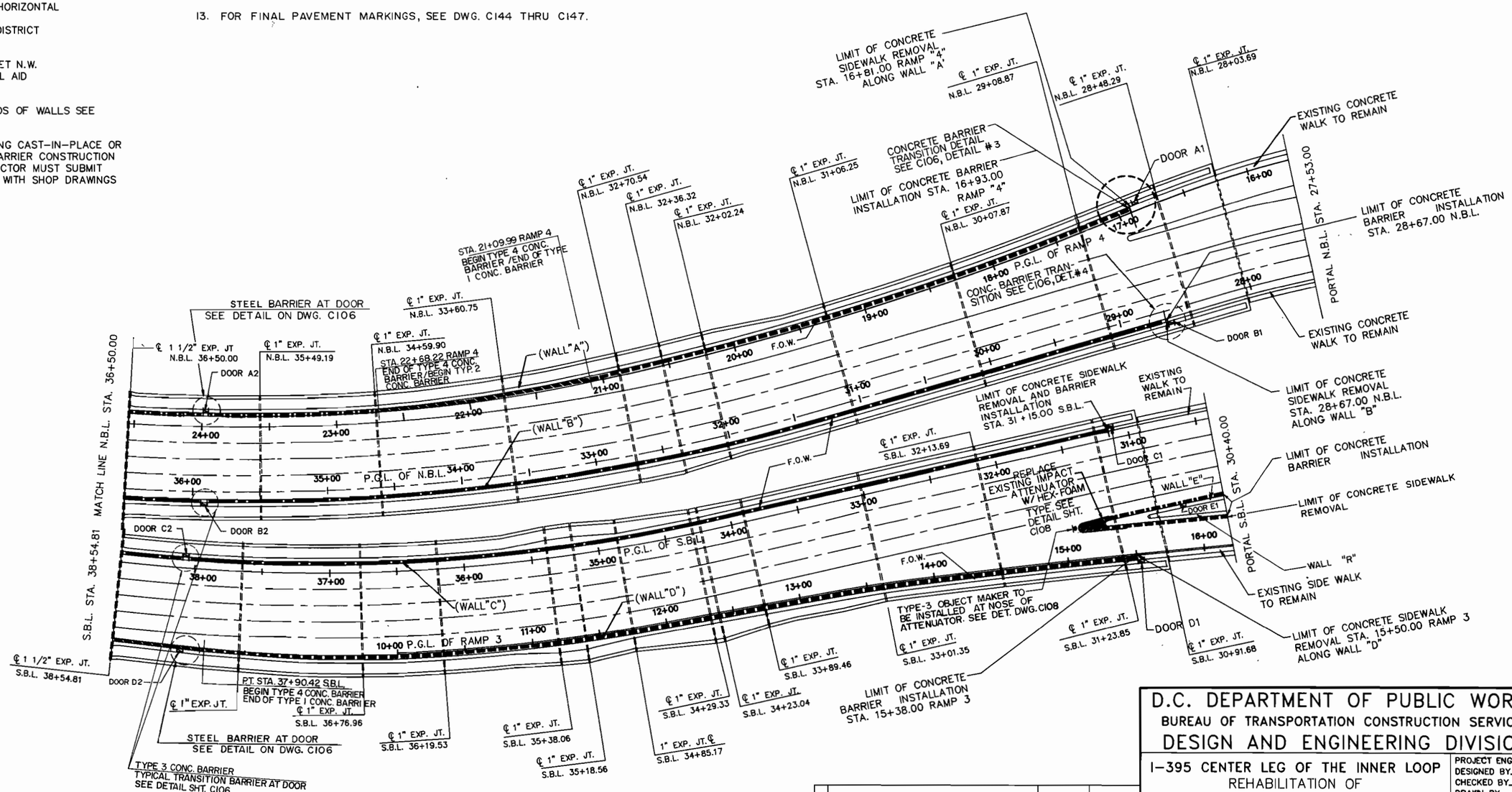

SCALE: 1"=40'

TIPPETTS.ABBETT.McCARTHY.STRATTON
ENGINEERS, ARCHITECTS AND PLANNERS
IN ASSOCIATION WITH:
FLEMING CORPORATION

NO	DESCRIPTION	NAME	DATE

REVISIONS

D.C. DEPARTMENT OF PUBLIC WORKS
BUREAU OF TRANSPORTATION CONSTRUCTION SERVICES
DESIGN AND ENGINEERING DIVISION

I-395 CENTER LEG OF THE INNER LOOP
REHABILITATION OF
THE MALL TUNNEL

TUNNEL CURB BARRIERS
SIDEWALK REMOVAL

PROJECT ENG. GM
DESIGNED BY RA
CHECKED BY GM
DRAWN BY FK
PROJECT MGR. IB

DIVISION CHIEF
DATE
FILE 1142

F.H.W.A. REG. NO.	STATE	FED AID PROJECT NO.	SHEET NO.	TOTAL SHEETS
3	D.C.	IR-395-1(150)	11	199

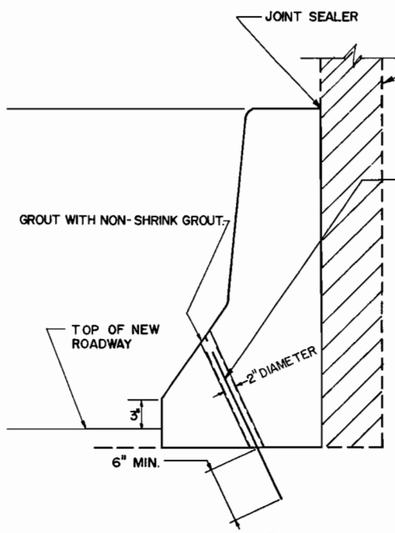

ANCHORAGE DETAIL FOR PRE-CAST BARRIERS

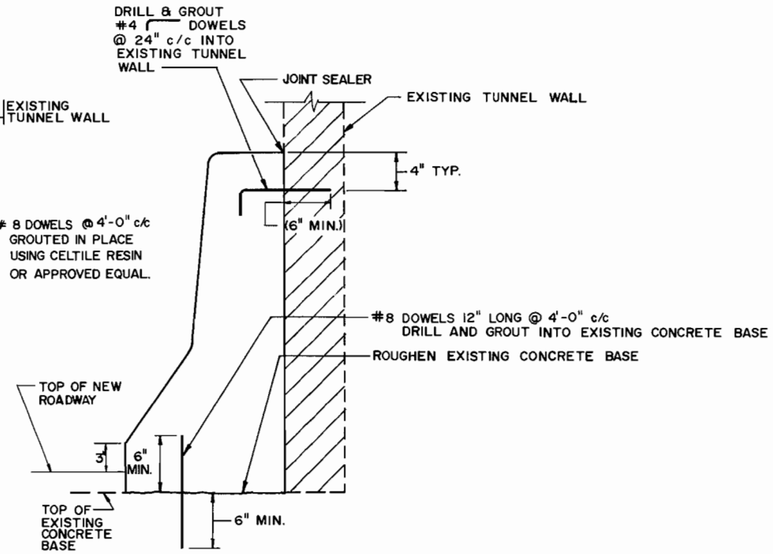

ANCHORAGE DETAIL FOR CAST-IN-PLACE BARRIERS

ANCHORAGE DETAILS
SCALE : 1 1/2" = 1'-0"

* DIMENSIONS VARIES FOR TRANSITION BARRIER

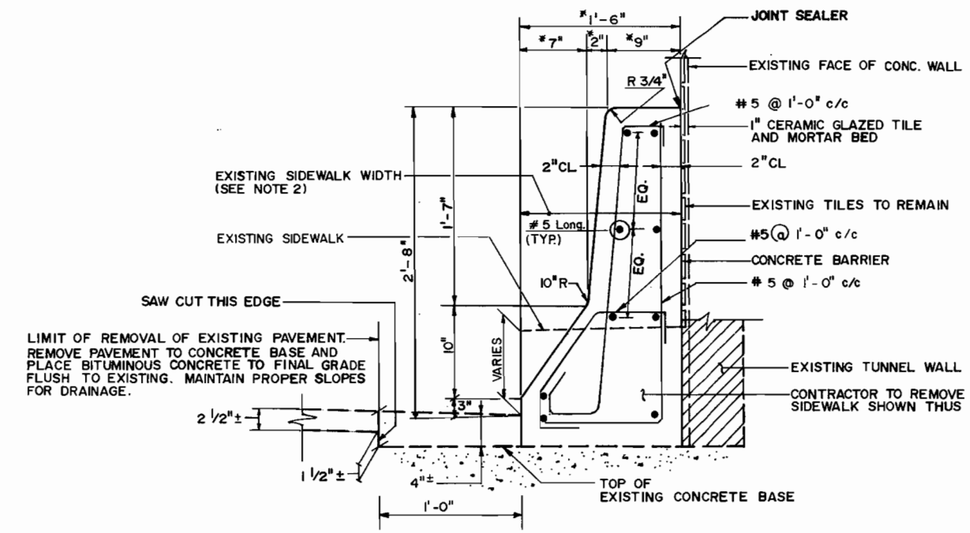

TYPICAL SECTION @ CONCRETE BARRIER
SCALE : 1 1/2" = 1'-0"

NOTE:
ALL LONGITUDINAL BARS ARE #5 SPACED AS SHOWN

BARRIER EXPANSION JOINT

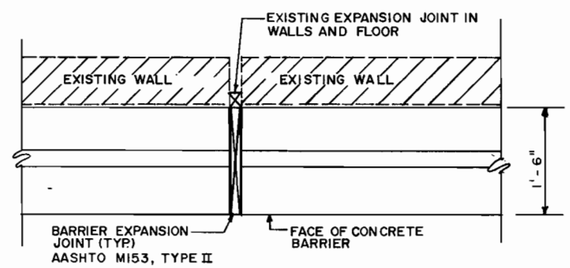

PLAN
SCALE: 1" = 1'-0"

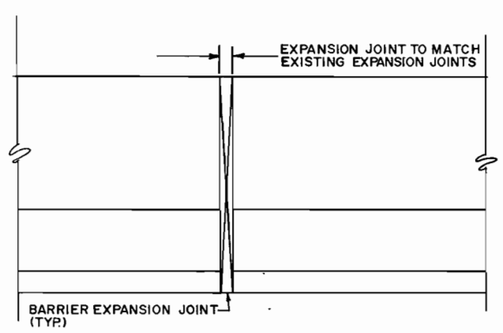

ELEVATION
SCALE: 1" = 1'-0"

NOTES:

1. FOR LIMITS OF SIDEWALK REMOVAL AND INSTALLATION OF CONCRETE BARRIER SEE DRAWING NO. C101 THRU C104.
2. FOR SIDEWALK REMOVAL SCHEDULE SEE DRAWING NO. C102.
3. ALL LONGITUDINAL BARS ARE #5 BARS SPACED AS SHOWN.
4. ALL BARS SHALL BE EPOXY COATED.
5. EXPOSED FACE OF BARRIERS SHALL BE TREATED WITH EPOXY PROTECTIVE COATING.
6. EXPANSION JOINT IN CONCRETE BARRIER TO BE CENTERED ON THE EXISTING EXPANSION JOINTS.
7. FOR LOCATION OF EXISTING EXPANSION JOINTS SEE DWG. C101-C104.
8. CONTRACTOR MAY ELECT TO USE EITHER PRE-CAST BARRIERS OR CAST-IN-PLACE BARRIERS. SEE SPECIAL PROVISIONS.
9. IF PRECAST BARRIER IS SELECTED CONTRACTOR MUST VERIFY THE DEPTH OF EXISTING CONCRETE BASE TO ASSURE A CONSTANT 2'-8" HEIGHT FROM TOP OF ROADWAY TO TOP OF BARRIER.

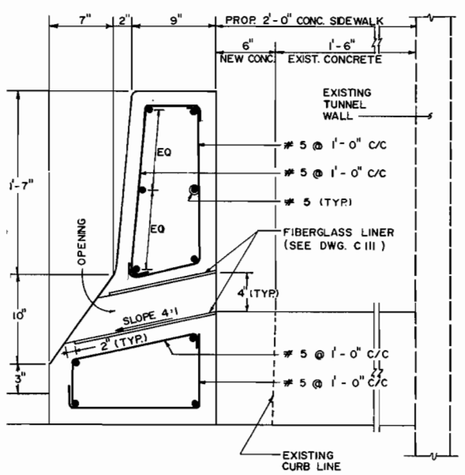

TYPICAL SECTION C-C AT NOTCHES FOR BARRIER TYPE-2 & TYPE-4 (1 1/2" = 1'-0")
(FOR ELEVATION SEE DWG. C111)

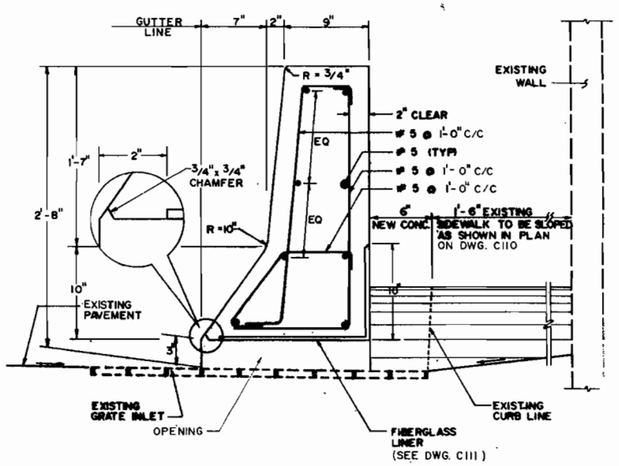

TYPICAL SECTION A-A OF NOTCHED BARRIER TYPE-2 & TYPE-4 AT EXISTING INLET (1 1/2" = 1'-0")
(FOR PLAN SEE DWG. C110)

TIPPETTS.ABBETT.McCARTHY.STRATTON
ENGINEERS, ARCHITECTS AND PLANNERS
IN ASSOCIATION WITH:
FLEMING CORPORATION

NO	DESCRIPTION	NAME	DATE

REVISIONS

D.C. DEPARTMENT OF PUBLIC WORKS
BUREAU OF TRANSPORTATION CONSTRUCTION SERVICES
DESIGN AND ENGINEERING DIVISION

I-395 CENTER LEG OF THE INNER LOOP REHABILITATION OF
THE MALL TUNNEL

CURB BARRIER DETAILS, TYPICAL SECTIONS

PROJECT ENG. G.M.
DESIGNED BY R.J.
CHECKED BY G.M.
DRAWN BY M.W.
PROJECT MGR. I.B.

DIVISION CHIEF
DATE
FILE 1142

F.N.W.A. REG. NO.	STATE	FED AID PROJECT NO.	SHEET NO.	TOTAL SHEETS
3	D.C.	IR-395-1(150)	12	199

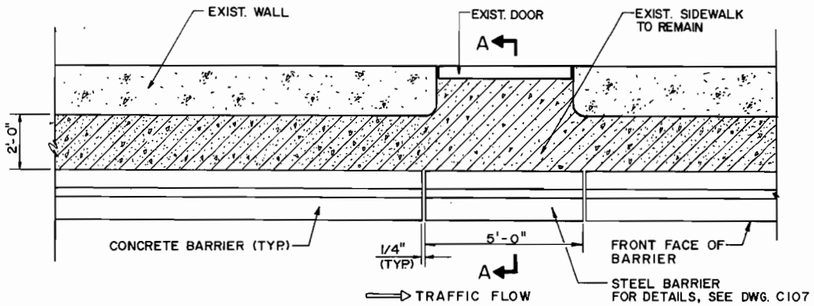

TYPICAL SINGLE FACE STEEL BARRIER PLAN, FOR TYPES 1, 2 & 4
(GUARD RAIL BARRIERS AT DOOR # A2, A3, I5, D2, D3, H1 & G2 & I3 SEE NOTE 2)

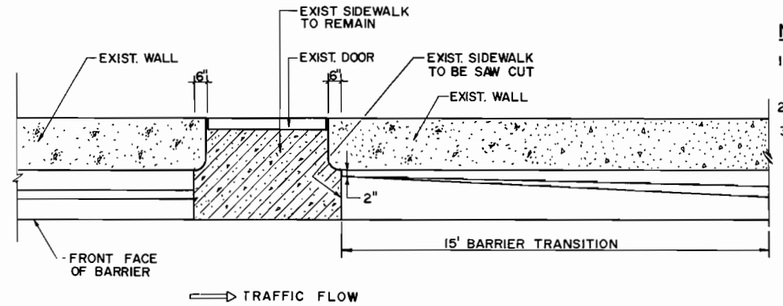

TYPICAL BARRIER OPENING PLAN FOR TYPE-3
(BARRIER OPENINGS AT DOOR # B1, B2, B3, B6, B7, B8, B9, B10, # C1, C2, C3, C6, C7, C8 & C9) N.T.S.

NOTE :

1. CONTRACTORS SHALL SUBMIT THE DETAIL REBAR SHOP DRAWINGS OF THESE TRANSITION BARRIER UNITS (AS SHOWN BELOW) FOR D.C. D.P.W'S APPROVAL.
2. DOORS NOT LISTED SHALL HAVE A CONTINUOUS CONCRETE BARRIER.
3. FOR TYPICAL TRANSITION BARRIER REIFORCEMENT SEE DWG. C105 AND SECTION B-B ON THIS DRAWING.

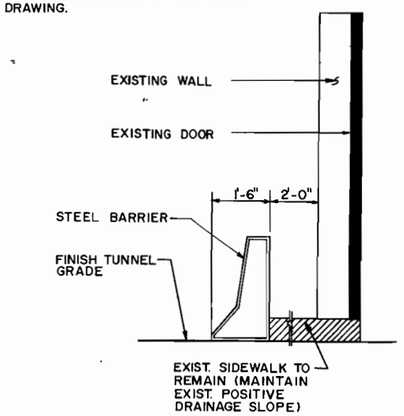

SECTION A-A
N.T.S.

PLAN

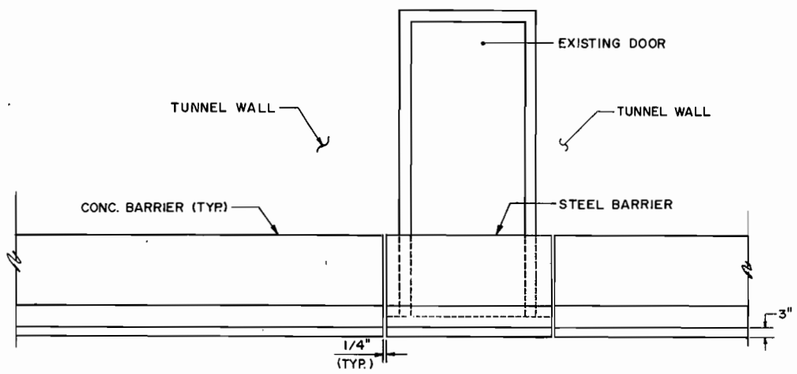

STEEL BARRIER AT DOOR
N.T.S.

PLAN

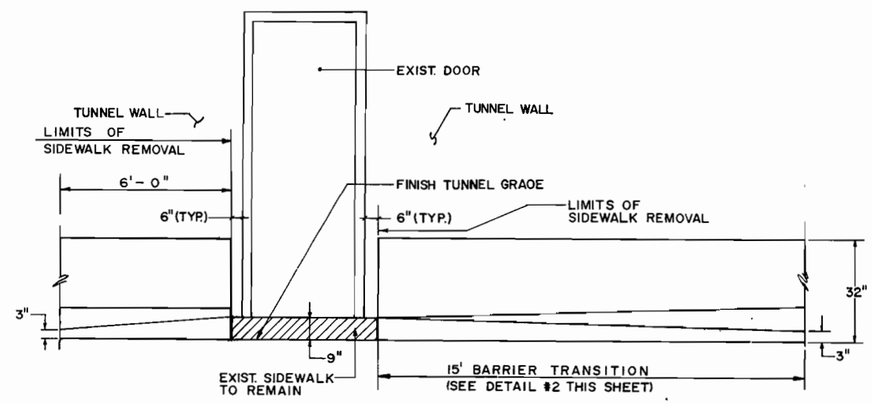

TRANSITION BARRIER AT DOOR
N.T.S.

ELEVATION

ELEVATION

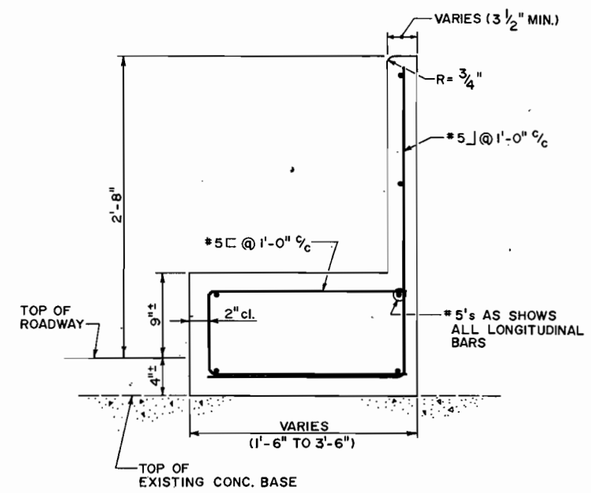

SECTION B-B
TYPICAL TRANSITION SECTION
SCALE: 1 1/2" = 1'-0"

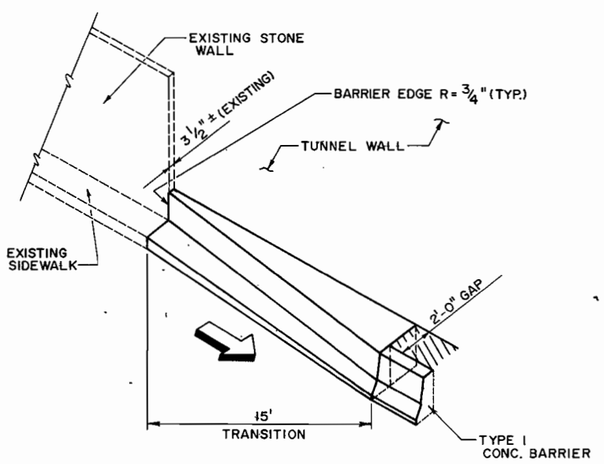

DETAIL 2
N.T.S.

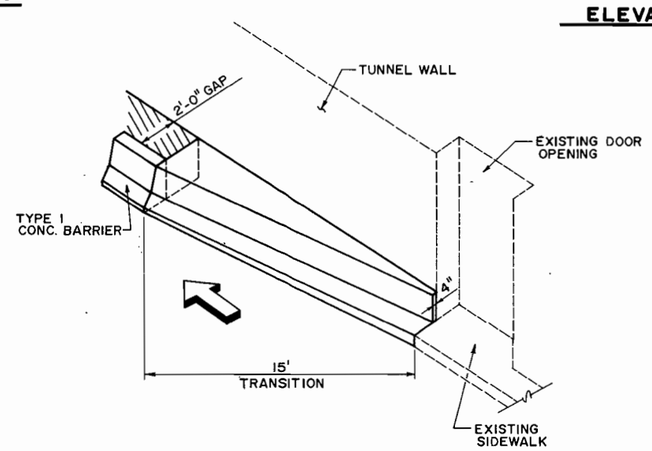

DETAIL 3
N.T.S.

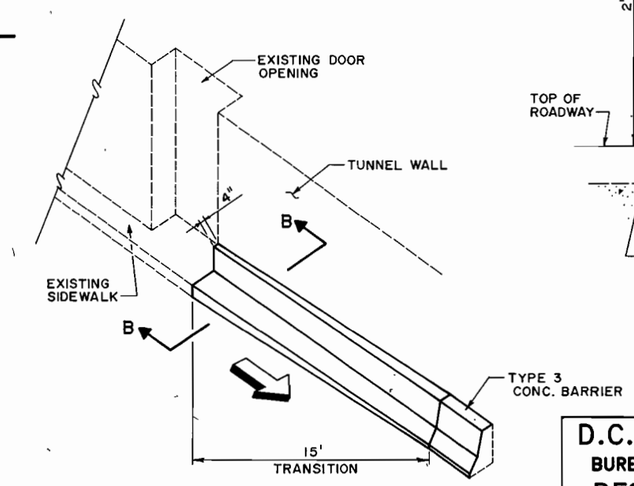

DETAIL 4
N.T.S.

TIPPETTS.ABBETT.McCARTHY.STRATTON
ENGINEERS, ARCHITECTS AND PLANNERS
IN ASSOCIATION WITH
FLEMING CORPORATION

NO	DESCRIPTION	NAME	DATE

REVISIONS

D.C. DEPARTMENT OF PUBLIC WORKS
BUREAU OF TRANSPORTATION CONSTRUCTION SERVICES
DESIGN AND ENGINEERING DIVISION

I-395 CENTER LEG OF THE INNER LOOP REHABILITATION OF
THE MALL TUNNEL

TRANSITION CURB BARRIER DETAILS AND CURB BARRIER DETAILS AT DOOR OPENINGS

PROJECT ENG. G.M.
DESIGNED BY R.A.
CHECKED BY G.M.
DRAWN BY H.S.
PROJECT MGR. I.B.

DIVISION CHIEF
DATE
FILE NO. 1102

F.H.W.A. REG. NO.	STATE	FED. AID PROJECT NO.	SHEET NO.	TOTAL SHEETS
3	D.C.	IR-395-1(150)	13	199

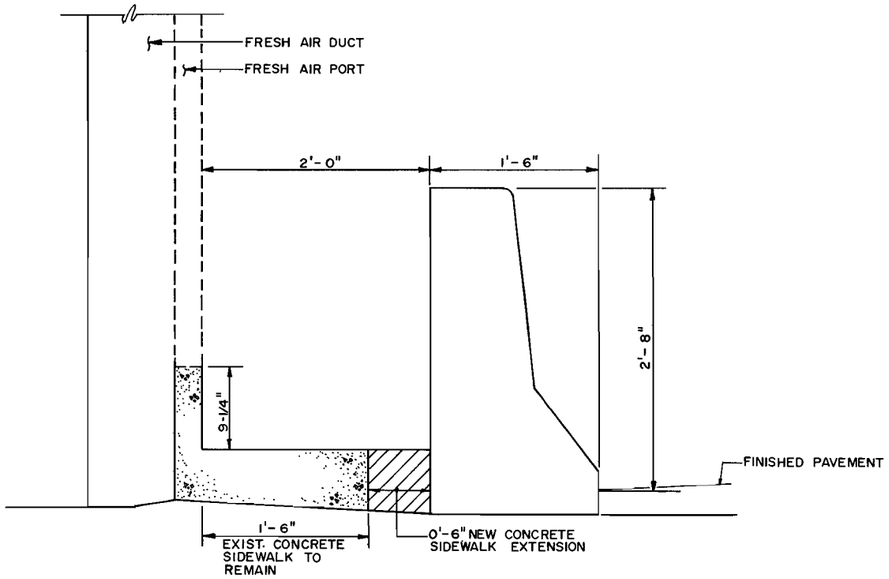

TYPE - 2
SCALE: 1-1/2" = 1'-0"

NOTES:

1. AS SHOWN ON THE PLAN, TYPE-4 IS A TRANSITION BETWEEN TYPE-2 AND TYPE-1 WITH VARYING WIDTHS OF SIDEWALK REMOVAL AND REPLACEMENT.
2. LIMIT OF NEW CONCRETE SIDEWALK EXTENSION VARIES FROM 0'-0" TO 0'-6".
3. LIMIT OF SIDEWALK REMOVAL VARIES FROM 0'-0" TO 1'-6".

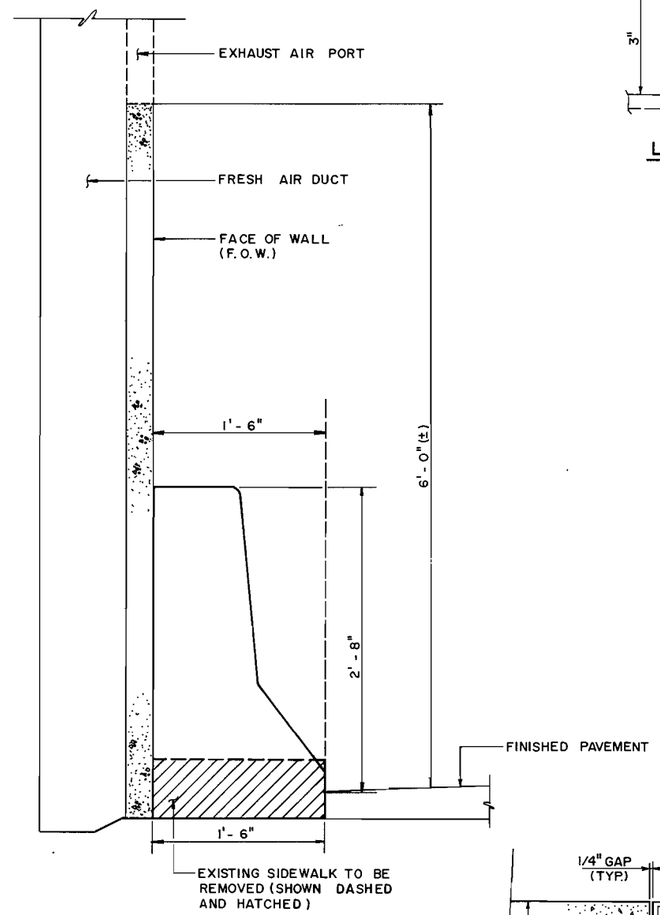

TYPE-3
SCALE: 1 1/2" = 1'-0"

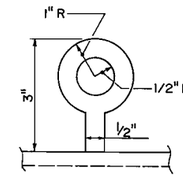

LIFT HOOK
DETAIL 1
N.T.S.

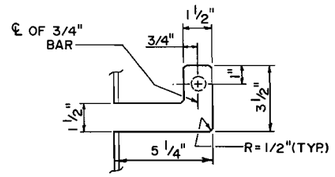

DETAIL 2
SCALE: 3" = 1'-0"

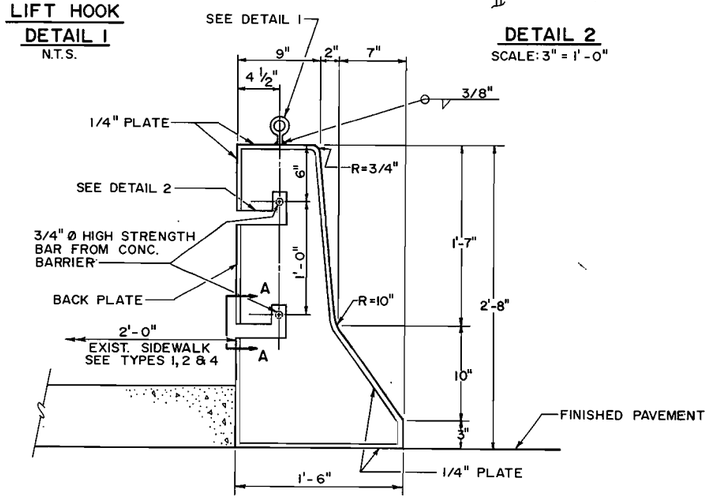

END SECTION
SCALE: 1 1/2" = 1'-0"

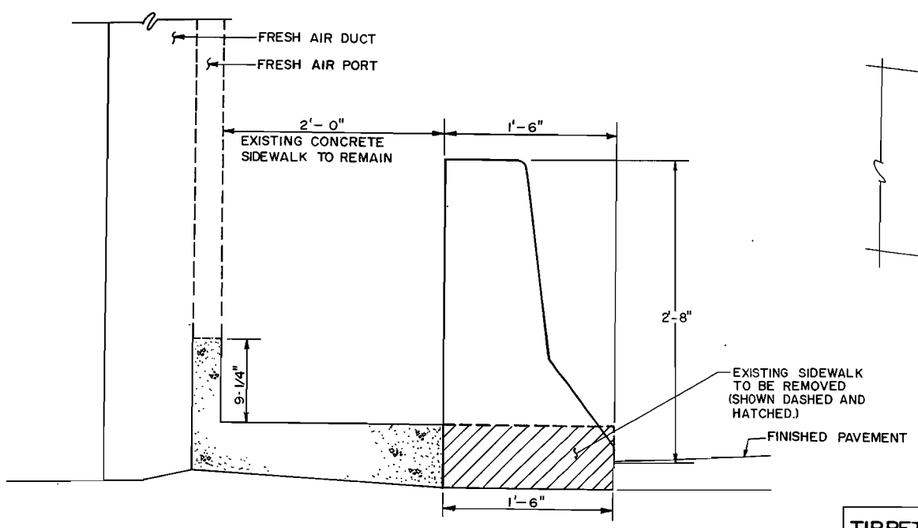

TYPE-1
SCALE: 1-1/2" = 1'-0"

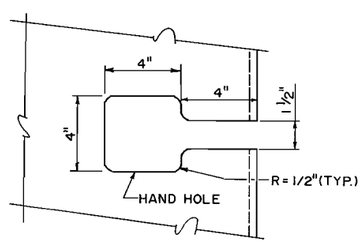

TYPICAL SLOT OPENING
SECTION A-A
BACK PLATE
N.T.S.

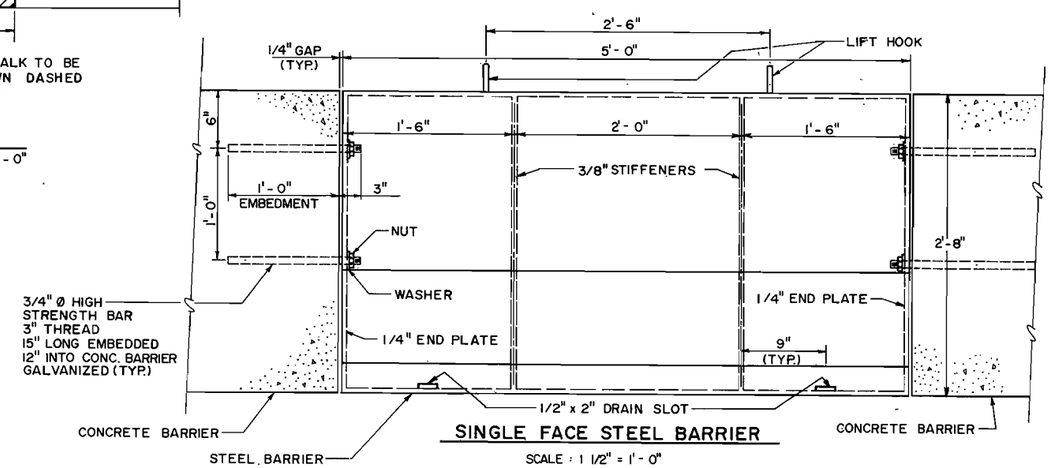

SINGLE FACE STEEL BARRIER
SCALE: 1 1/2" = 1'-0"

NOTES:

1. ALL PLATES AND STIFFENERS FOR SINGLE FACE STEEL BARRIER SHALL BE STRUCTURAL STEEL ASTM A36 AASHTO (M183) AND SHALL BE GALVANIZED AS PER ASTM A123, AASHTO (M111).
2. ALL EXPOSED SURFACES SHALL BE PAINTED, SEE SPECIAL PROVISIONS.

TIPPETTS. ABBETT. McCARTHY. STRATTON
ENGINEERS, ARCHITECTS AND PLANNERS
IN ASSOCIATION WITH
FLEMING CORPORATION

NO.	DESCRIPTION	NAME	DATE

REVISIONS

D.C. DEPARTMENT OF PUBLIC WORKS
BUREAU OF TRANSPORTATION CONSTRUCTION SERVICES
DESIGN AND ENGINEERING DIVISION

I-395 CENTER LEG OF THE INNER LOOP REHABILITATION OF
THE MALL TUNNEL

TUNNEL CURB BARRIERS
DETAILS

PROJECT ENG. G.M.
DESIGNED BY K.S.L.
CHECKED BY G.M.
DRAWN BY E.L.S.
PROJECT MGR. N.M.

DIVISION CHIEF
DATE
FILE 1142

REG. NO.	STATE	PROJECT NO.	NO.	SHEETS
3	D.C.	IR-395-1(150)	14	199

ATTENUATOR DATA					
LOCATION		LENGTH	WIDTH	REMARK	REFERENCE
1	GORE - RAMP 3 (S.B.L.)	19'-5 1/2"	4'-7"	ENERGY ABSORPTION SYSTEMS, INC. MODEL NO. 209508H8S OR APPROVED EQUAL	8-BAY HEX-FOAM MEDIUM
2	GORE - RAMP J (N.B.L.)	19'-5 1/2"	5'-5 1/2"	MODEL NO. 209800H8S OR APPROVED EQUAL	8-BAY HEX-FOAM WIDE
3	GORE - RAMP I & RAMP J	-	-	EXISTING IMPACT ATTENUATOR TO REMAIN	-

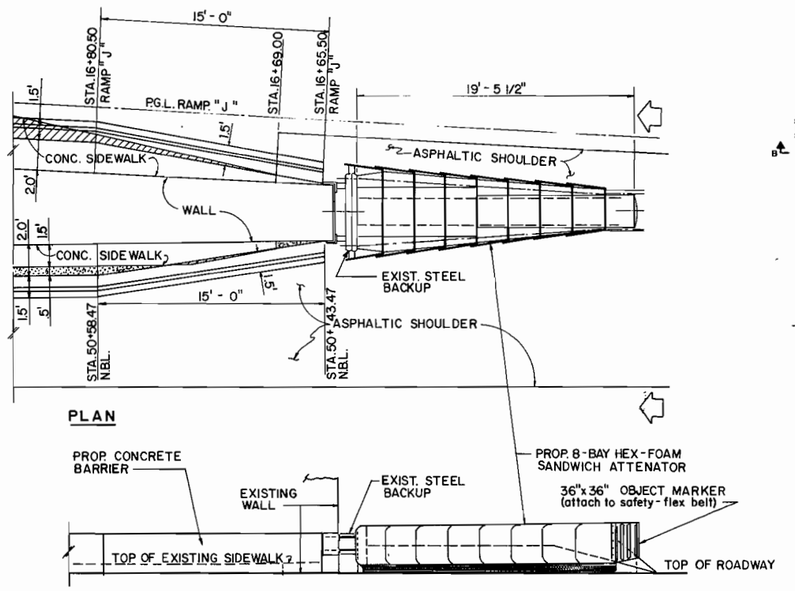

8-BAY HEX-FOAM ATTENUATOR (MEDIUM TYPE)

N.T.S.

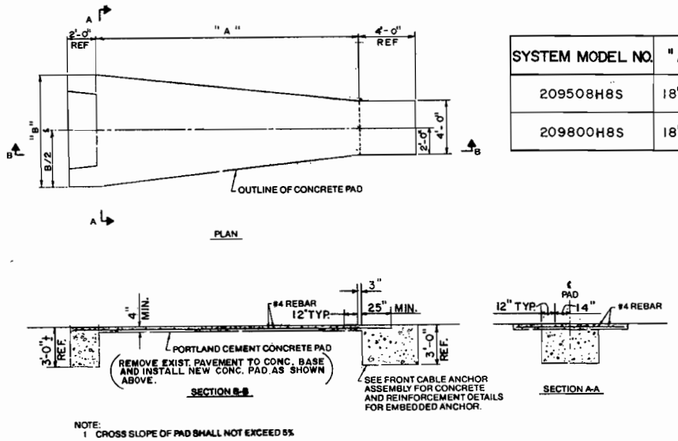

SYSTEM MODEL NO.	"A"	"B"
209508H8S	18'-8"	8'-0"
209800H8S	18'-8"	10'-0"

CONCRETE PAD FOR HEX-FOAM SANDWICH SYSTEM WITH CONCRETE BACKUP

PARTS LIST		
ITEM		DESCRIPTION
1		DIAPHRAGM ASSY.
2		SAFETY-FLEX BELT
3		SUPPORT LEG
4		SECONDARY CABLE ASSY.
5		BAR WASHER ½" X 2" X 3"
6		H.H. BOLT ½" DIA. X 3"
7		ELEVATOR BOLT ⅝" DIA. X 1¾"
8		H.H. NUT ⅝"
9		FLAT WASHER ⅝"
10		HEX-SOCKET B.H. CAPSCREW ½" DIA X 2"
11		FLAT WASHER ½"
12		H.H. NUT ½"
13		SHEAR PIN (COTTER PIN)

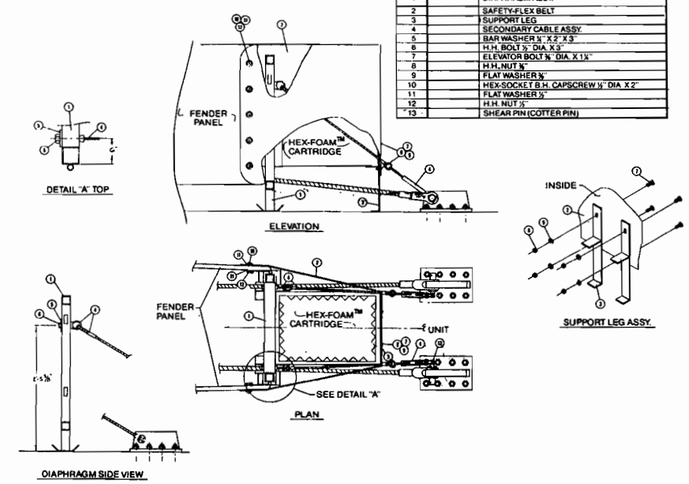

HEX-FOAM SANDWICH SYSTEM NOSE ASSEMBLY

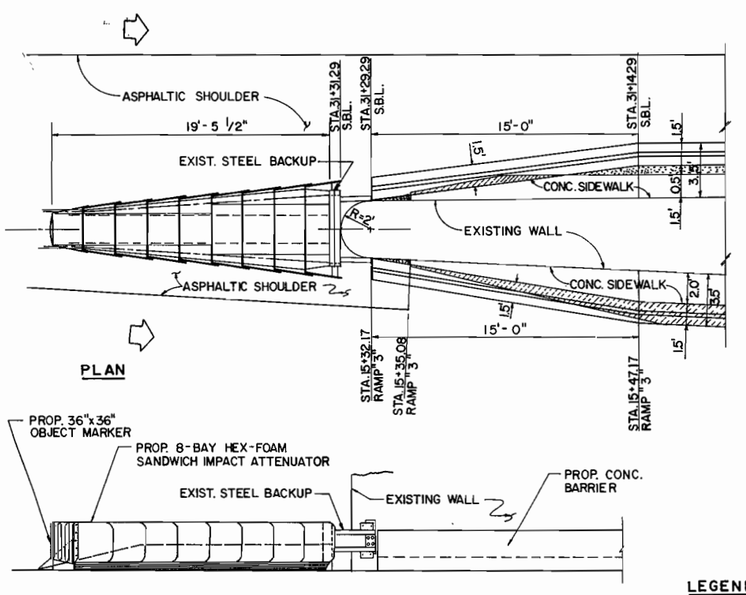

8-BAY HEX-FOAM ATTENUATOR (WIDE TYPE)

N.T.S.

LEGEND:

- CONC. SIDEWALK EXTENSION
- CONC. SIDEWALK REMOVAL

PARTS LIST		
ITEM		DESCRIPTION
1		RESTRAINING CABLE
2		SECONDARY CABLE
3		PULLOUT CABLE

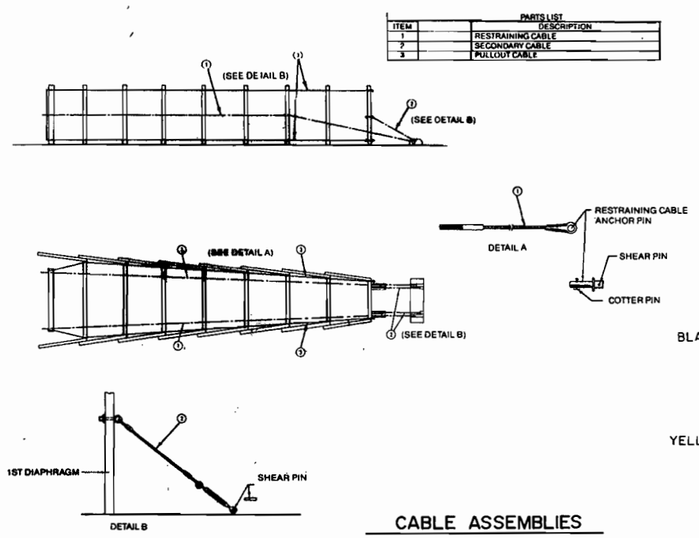

CABLE ASSEMBLIES

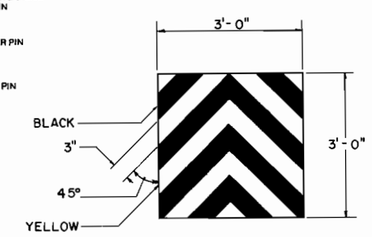

TRAFFIC PASSING ON BOTH SIDES

OBJECT MARKERS

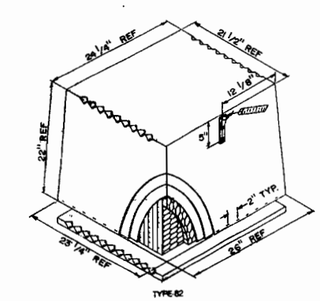

HEX-FOAM CARTRIDGES

NO.	DESCRIPTION	NAME	DATE

REVISIONS

TIPPETTS. ABBETT. McCARTHY. STRATTON
ENGINEERS, ARCHITECTS AND PLANNERS
IN ASSOCIATION WITH
FLEMING CORPORATION

D.C. DEPARTMENT OF PUBLIC WORKS
BUREAU OF TRANSPORTATION CONSTRUCTION SERVICES
DESIGN AND ENGINEERING DIVISION

I-395 CENTER LEG OF THE INNER LOOP REHABILITATION OF
THE MALL TUNNEL

IMPACT ATTENUATOR AND OBJECT MARKERS DETAILS

PROJECT ENG. G.M.
DESIGNED BY R.A.
CHECKED BY G.M.
DRAWN BY H.S.
PROJECT MGR. I.B.
DIVISION CHIEF
DATE
FILE 1142
SHEET 14 OF 199

F.H.W.A. REG. NO.	STATE	FED. AID PROJECT NO.	SHEET NO.	TOTAL SHEETS
3	D.C.	IR-395-1(150)	15	199

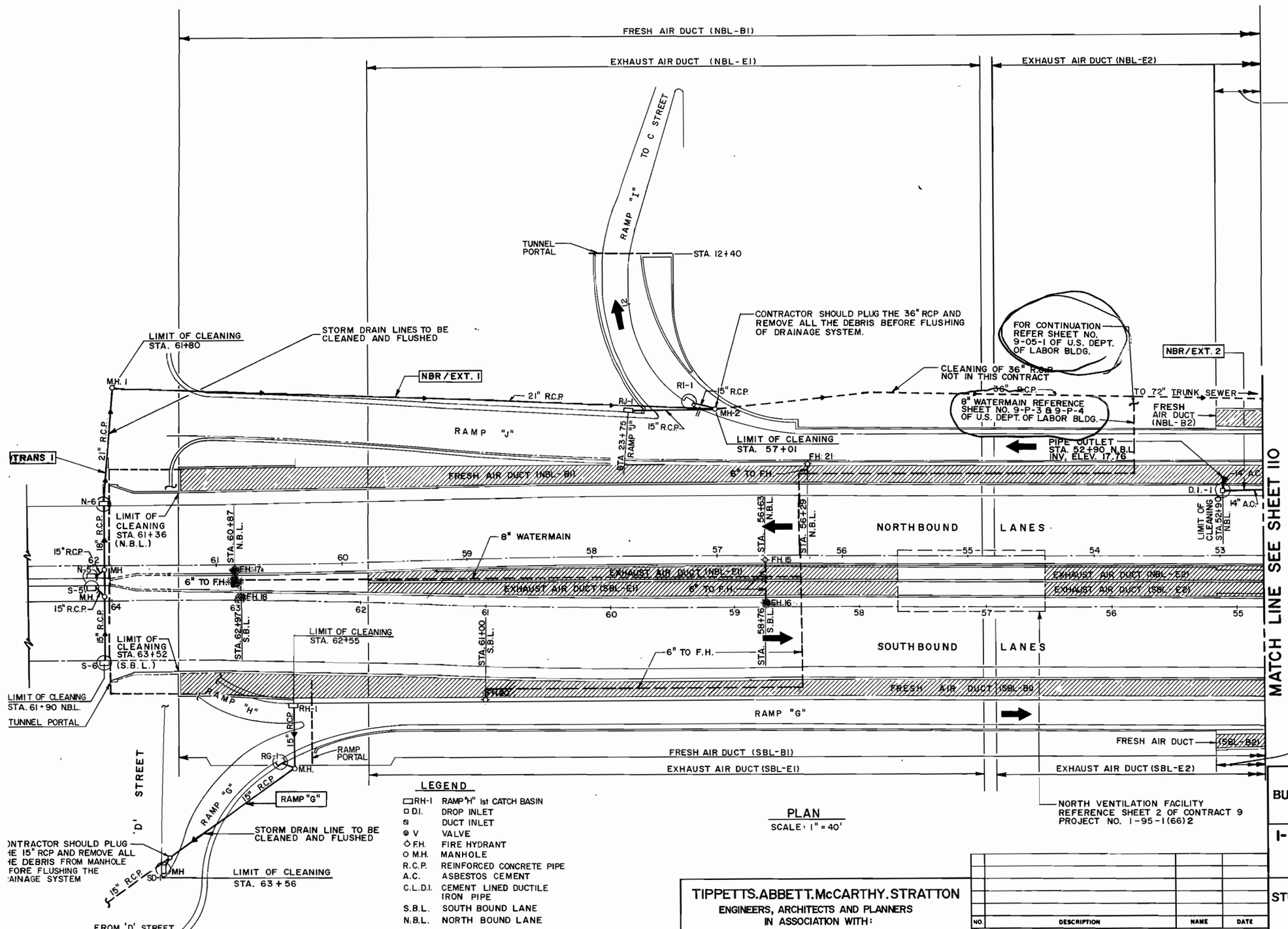

PLAN
SCALE: 1" = 40'

NOTES:

1. FOR STORM DRAINAGE CLEANING SCHEDULE SEE DWG. C113.
2. FOR AIR DUCT CLEANING SCHEDULE SEE DWG. C113.
3. FOR NOTES SEE DWG. C113.
4. FOR ADDITIONAL INFORMATION REFER TO THE FOLLOWING DRAWINGS: THE DEPARTMENT OF HIGHWAYS AND TRAFFIC. CENTER LEG OF THE INNER LOOP "D" STREET S.W. TO "D" STREET N.W. MALL TUNNEL:
   - DUCT DESIGNATION: DWG. 2, CONTRACT NO. 9 OF FEDERAL AID PROJECT NO. I-95-1(66)2.
   - CATCH BASIN & MANHOLE: DWG. 24, CONTRACT NO. 1 OF FEDERAL AID PROJECT NO. I-95-1(53)2.
   - DROP INLET: DWG. 76, CONTRACT NO. 1 OF FEDERAL AID PROJECT NO. I-95-1(53)2.

LEGEND

- STORM DRAIN PIPE TO BE CLEANED
- STORM DRAIN PIPE & WATER LINE NOT REQ'D. CLEANING
- EXISTING AIR DUCT

LEGEND

RH-1	RAMP "H" 1st CATCH BASIN
D.I.	DROP INLET
	DUCT INLET
V	VALVE
F.H.	FIRE HYDRANT
M.H.	MANHOLE
R.C.P.	REINFORCED CONCRETE PIPE
A.C.	ASBESTOS CEMENT
C.L.D.I.	CEMENT LINED DUCTILE IRON PIPE
S.B.L.	SOUTH BOUND LANE
N.B.L.	NORTH BOUND LANE

TIPPETTS.ABBETT.McCARTHY.STRATTON
ENGINEERS, ARCHITECTS AND PLANNERS
IN ASSOCIATION WITH:
FLEMING CORPORATION

NO.	DESCRIPTION	NAME	DATE

REVISIONS

D.C. DEPARTMENT OF PUBLIC WORKS
BUREAU OF TRANSPORTATION CONSTRUCTION SERVICES
DESIGN AND ENGINEERING DIVISION

I-395 CENTER LEG OF THE INNER LOOP
REHABILITATION OF
THE MALL TUNNEL

PROJECT ENG. G.M.
DESIGNED BY R.A.
CHECKED BY G.M.
DRAWN BY C.M.
PROJECT MGR. I.B.

DIVISION CHIEF
DATE
FILE 1142

STORM DRAIN / AIR DUCT SYSTEM CLEANING

N.B.L. STA. 53+00 TO STA. 62+00
S.B.L. STA. 55+00 TO STA. 64+00

F.H.W.A. REG. NO.	STATE	FED. AID PROJECT NO.	SHEET NO.	TOTAL SHEETS
3	D.C.	IR-395-1(150)	16	199

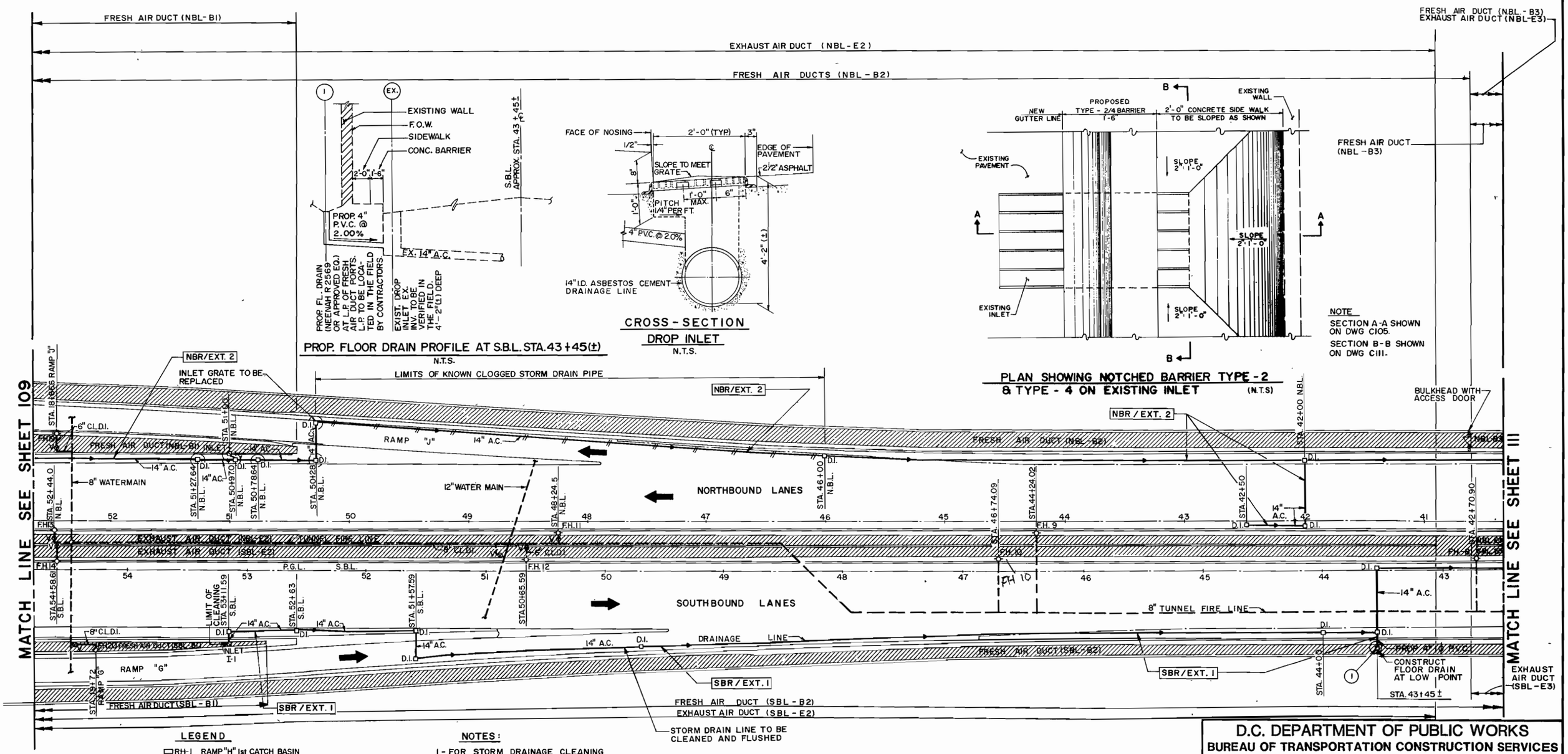

LEGEND

- RH-1 RAMP "H" 1st CATCH BASIN
- D.I. DROP INLET
- DUCT INLET
- V VALVE
- F.H. FIRE HYDRANT
- M.H. MANHOLE
- R.C.P. REINFORCED CONCRETE PIPE
- A.C. ASBESTOS CEMENT
- C.L.D.I. CEMENT LINED DUCTILE IRON PIPE
- STORM DRAIN PIPE TO BE CLEANED
- STORM DRAIN PIPE AND WATER LINE NOT REQUIRED CLEANING.
- EXISTING AIR DUCT

NOTES:

1. FOR STORM DRAINAGE CLEANING SCHEDULE SEE DWG C113.
2. FOR AIR DUCT CLEANING SCHEDULE SEE DWG C113.
3. FOR NOTES SEE DWG C113.
4. FOR AIR DUCT DESIGNATION REFERENCE DRAWINGS OF CATCH BASIN, MANHOLE & DROP INLET SEE NOTE 4 ON DWG C109.

TIPPETTS.ABBETT.McCARTHY.STRATTON
ENGINEERS, ARCHITECTS AND PLANNERS
IN ASSOCIATION WITH:
FLEMING CORPORATION

NO.	DESCRIPTION	NAME	DATE

REVISIONS

D.C. DEPARTMENT OF PUBLIC WORKS
BUREAU OF TRANSPORTATION CONSTRUCTION SERVICES
DESIGN AND ENGINEERING DIVISION

I-395 CENTER LEG OF THE INNER LOOP
REHABILITATION OF
THE MALL TUNNEL

STORM DRAIN/AIR DUCT SYSTEM CLEANING

N.B.L. STA. 41+00 STA. 53+00
S.B.L. STA. 43+00 STA. 55+00

PROJECT ENG. G.M.
DESIGNED BY R.A.
CHECKED BY G.M.
DRAWN BY C.M.
PROJECT MGR. I.B.

DIVISION CHIEF
DATE
FILE 1142

F.H.W.A. REG. NO.	STATE	FED. AID PROJECT NO.	SHEET NO.	TOTAL SHEETS
3	D.C.	IR-395-1(150)	17	199

SECTION B-B (SEE DWG. C110)

TYPICAL NOTCHES IN BARRIER WITH FIBERGLASS LINER

SCALE : 1/2" = 1'-0"
(FOR SECTION C-C SEE DWG C105)

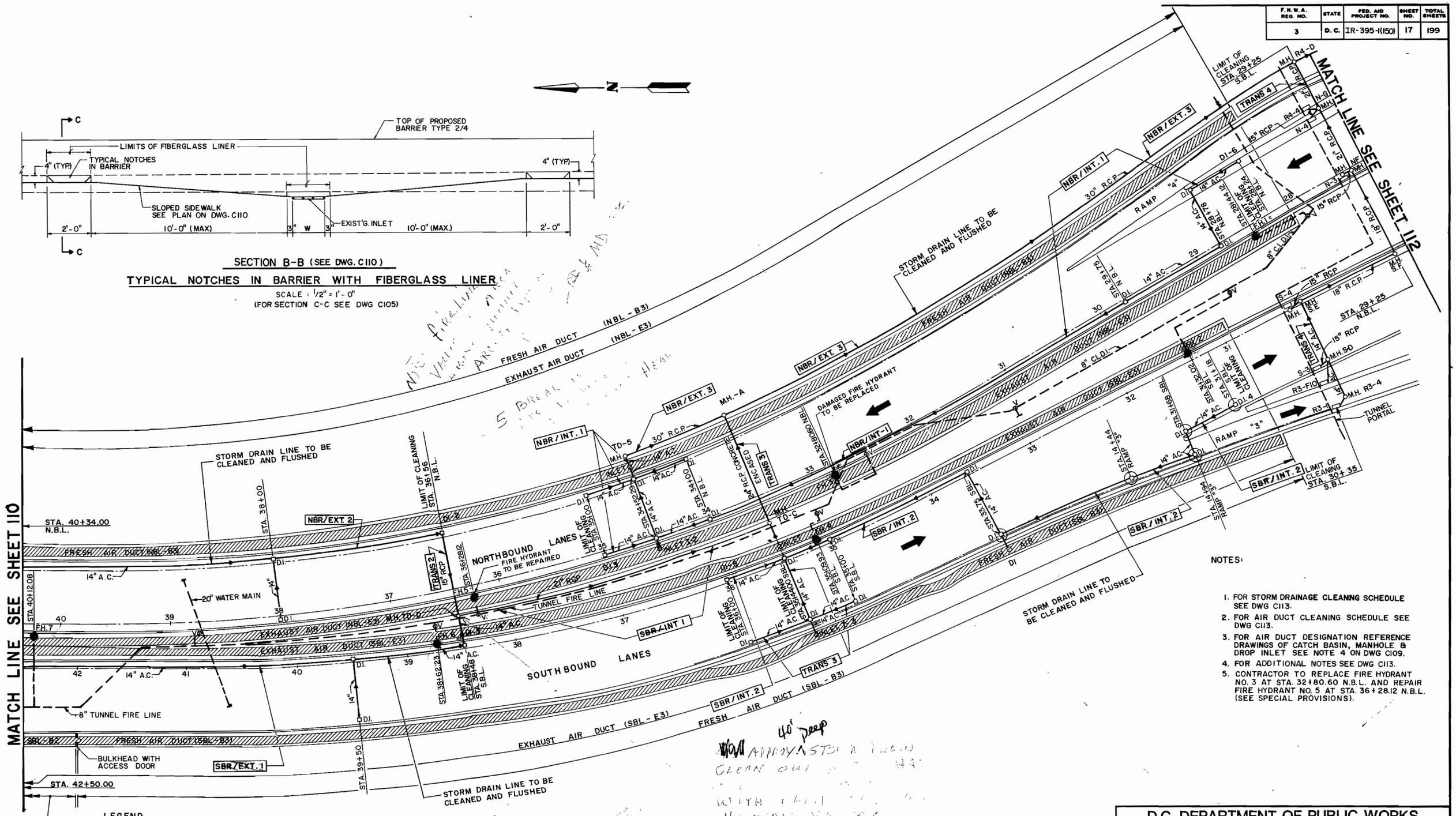

NOTES:

1. FOR STORM DRAINAGE CLEANING SCHEDULE SEE DWG C113.
2. FOR AIR DUCT CLEANING SCHEDULE SEE DWG C113.
3. FOR AIR DUCT DESIGNATION REFERENCE DRAWINGS OF CATCH BASIN, MANHOLE & DROP INLET SEE NOTE 4 ON DWG C109.
4. FOR ADDITIONAL NOTES SEE DWG C113.
5. CONTRACTOR TO REPLACE FIRE HYDRANT NO. 3 AT STA. 32+80.60 N.B.L. AND REPAIR FIRE HYDRANT NO. 5 AT STA. 36+28.12 N.B.L. (SEE SPECIAL PROVISIONS).

PLAN

SCALE 1" = 40'

LEGEND

- RH-1 RAMP "H" 1st. CATCH BASIN
- D.I. DROP INLET
- DUCT INLET
- V VALVE
- F.H. FIRE HYDRANT
- M.H. MANHOLE
- R.C.P. REINFORCED CONCRETE PIPE
- A.C. ASBESTOS CEMENT
- C.L.D.I CEMENT LINED DUCTILE IRON PIPE
- STORM DRAIN PIPE TO BE CLEANED
- STORM DRAIN PIPE AND WATER LINE NOT REQUIRED CLEANING
- EXISTING AIR DUCT

TIPPETTS.ABBETT.McCARTHY.STRATTON
ENGINEERS, ARCHITECTS AND PLANNERS
IN ASSOCIATION WITH:
FLEMING CORPORATION

NO.	DESCRIPTION	NAME	DATE

D.C. DEPARTMENT OF PUBLIC WORKS
BUREAU OF TRANSPORTATION CONSTRUCTION SERVICES
DESIGN AND ENGINEERING DIVISION

I-395 CENTER LEG OF THE INNER LOOP
REHABILITATION OF
THE MALL TUNNEL

STORM DRAIN/AIR DUCT SYSTEM CLEANING

N.B.L. STA. 28+00 TO STA. 41+00
S.B.L. STA. 31+00 TO STA. 43+00

PROJECT ENG. G.M.
DESIGNED BY R.A.
CHECKED BY G.M.
DRAWN BY C.M.
PROJECT MGR. I.B.

DIVISION CHIEF
DATE
FILE 1142

F.H.W.A. REG. NO.	STATE	FED. AID PROJECT NO.	SHEET NO.	TOTAL SHEETS
3	D.C.	IR-395-1(150)	18	199

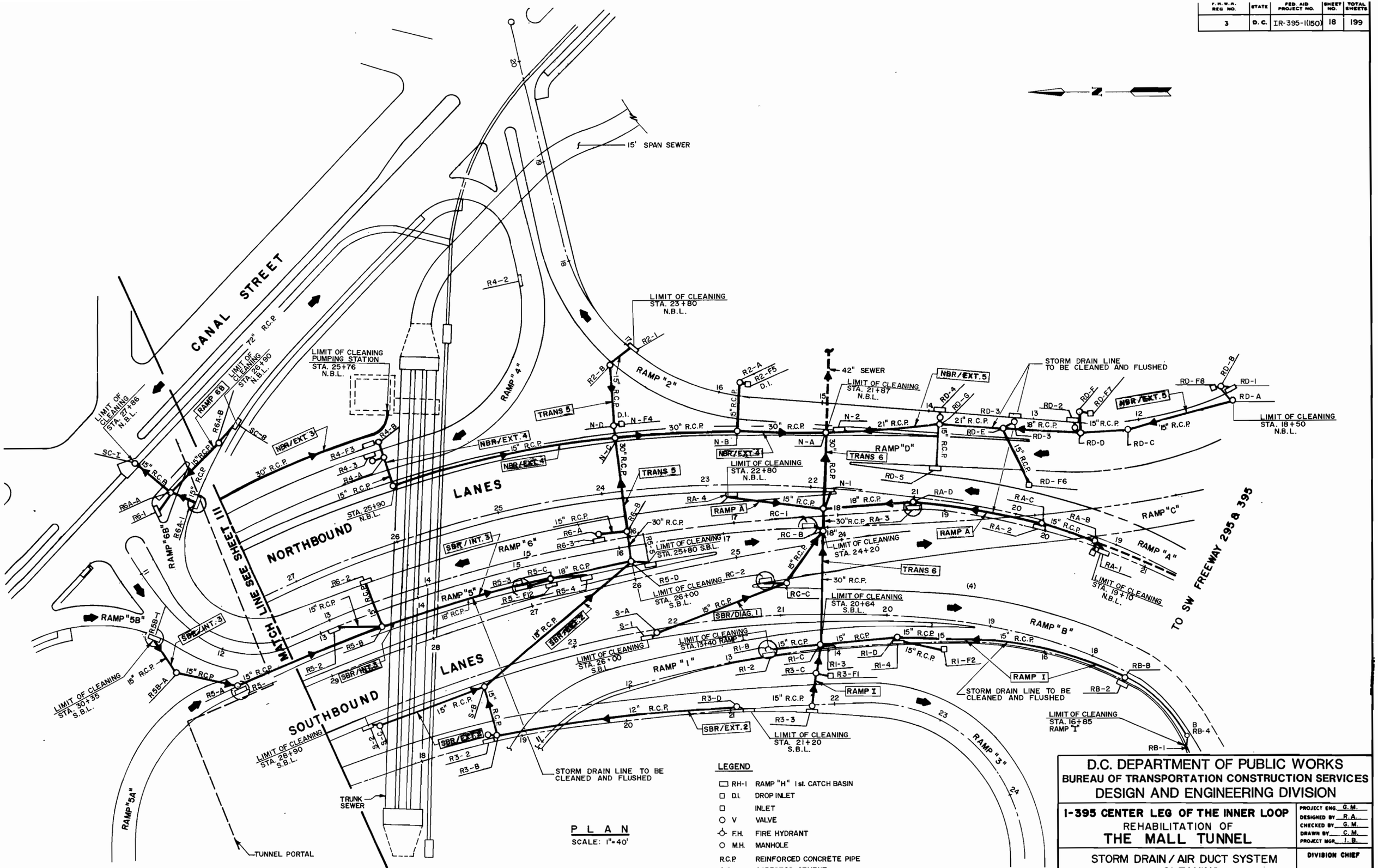

D.C. DEPARTMENT OF PUBLIC WORKS
BUREAU OF TRANSPORTATION CONSTRUCTION SERVICES
DESIGN AND ENGINEERING DIVISION

I-395 CENTER LEG OF THE INNER LOOP
REHABILITATION OF
THE MALL TUNNEL

STORM DRAIN / AIR DUCT SYSTEM CLEANING
N.B.L. STA. 19+00 TO STA. 28+00
S.B.L. STA. 24+00 TO STA. 31+00

PROJECT ENG. G.M.
DESIGNED BY R.A.
CHECKED BY G.M.
DRAWN BY C.M.
PROJECT MGR. I.B.
DIVISION CHIEF
DATE
FILE 1142

REG. NO.	STATE	PROJECT NO.	SHEET NO.	TOTAL SHEETS
3	D.C.	IR-395-1(150)	19	199

STORM DRAINAGE CLEANING SCHEDULE DATA

ING NO.	LINE I.D.	STATION TO STATION	LENGTH IN FT. ROAD-WAY	12" RCP	14" A.C.	15" RCP	18" RCP	21" RCP	26" RCP	30" RCP	4" PVC	24" RCP	NUMBERS MAN-HOLE	CATCH-BASIN	DROP-INLET	DUCT-INLET	FLOOR DRAIN	STRUCTURE	DESCRIPTION
109	TRANS 1	STA. 61+90	NBL			75	55	95					3	4				S-6 TO MH-1	
109	NBR/ EXT. 1	57+01 TO 61+80	NBL			90		490					1	2				MH-1 TO MH-2	
109	RAMP G	62+55 TO 63+56	SBL			202							2	3				RH-1 TO SD-1	
109, 110, 111	NBR/ EXT. 2	36+56 TO 52+90	NBL		1875										13	1		DI-1 TO DI-2	
110, 111	SBR/ EXT. 1	38+48 TO 53+11.59	SBL		1620						25*				11	1	1*	I-1 TO DI-3	* NEW FLOOR DRAIN TO BE CONSTRUCTED @ STA. 43+45 ± S.B.L. AT FRESH AIR DUCT AREA AND PROVIDE A 4" P.V.C. FROM F.D. TO THE EXISTING DRAINAGE SYSTEM. SEE DWG. C110.
111	TRANS 2	STA. 36+56	NBL		27	78							1					DI-2 TO DI-3	
111	SBR/ INT. 1	35+44 TO 38+48	SBL					300					1					TD-C TO TD-D	
111	NBR/ INT. 1	28+24 TO 35+00	NBL		930								1		10	2		DI-6 TO DI-3	
111	TRANS 3	STA. 35+44	SBL		215							105	1		4	2		I-3 TO MH-A	
111	SBR/ INT. 2	31+18 TO 36+00	SBL		575										8			DI-4 TO DI-5	
111, 112	NBR/ EXT. 3	25+76 TO 34+52.29	NBL							925			1					PUMPING STA. TO TD-5	
111	TRANS 4	29+25 TO 30+20	SBL		108	74	185	115					8	7				R3-1 TO R4-D	
112	SBR/ INT. 3	25+80 TO 30+35	SBL			600	78						5	8				R5-5 TO R5B-1	
112	SBR/ EXT. 2	21+20 TO 28+90	SBL	250		170	190						5	3				S-2 TO R5-D	
112	TRANS 5	23+80 TO 23+60	NBL			145				120			5	2	1			R2-1 TO R5-D	
112	NBR/ EXT. 4	21+87 TO 25+90	NBL			290				260			7	2	1			N-A TO R4-B	
112	NBR/ EXT. 5	18+50 TO 21+87.00	NBL			340	75	170					8	6	3			RD-A TO N-A	
112	RAMP A	19+10 TO 22+80	NBL			165	215						4	4	1			RA-1 TO RA-4	
112	RAMP I	13+40 TO 16+85.00	RAMP I			630							7	5	2			RI-B TO RB-4	
112	SBR/ DIAG. 1	24+20 TO 26+00	SBL			220							3	3				S-1 TO RC-B	
112	RAMP 6B	26+90 TO 27+86.00	N.B.L.			180							3	3				SC-8 TO SC-I	
112	TRANS 6	20+64 TO 21+87				20				210				1				RI-C TO N-A	
	TOTAL			250	5350	3279	798	1170		1515	25*	105	66	53	54	6	1*		

AIR DUCT CLEANING SCHEDULE

DRAWING NO.	LINE	STATION TO STATION	ROADWAY	LENGTH (FT.)	REMARKS
DWG. 109, 110, 111	SBL-B2 / SBL-B3	30+92 TO 55+17.26	SBL	2490	FRESH AIR DUCT
DWG. 109, 110	SBL-B1	52+82 TO 63+52	SBL	1100	FRESH AIR DUCT
DWG. 109, 110, 111	NBL-E1 / NBL-E2 / NBL-E3	28+05 TO 59+80	NBL	3150	EXHAUST AIR DUCT
DWG. 109, 110, 111	SBL-E1 / SBL-E2 / SBL-E3	30+91 TO 61+95	SBL	3065	EXHAUST AIR DUCT
DWG. 109, 110	NBL-B1	50+45 TO 61+36	NBL	1100	FRESH AIR DUCT
DWG. 109, 110, 111	NBL-B2 / NBL-B3	28+05 TO 53+05	NBL	2495	FRESH AIR DUCT
	TOTAL			13,400	

NOTES:

1. THE CONTRACTOR SHALL ADHERE TO ALL DC DPW STANDARDS AND SPECIFICATIONS.
2. THE CONTRACTOR MUST COORDINATE ALL SCHEDULE WORK WITH THE ENGINEER AND THE TUNNEL STAFF (202) 727-5644 PRIOR TO START OF CONSTRUCTION.
3. THE CONTRACTOR MUST OBTAIN THE ENGINEER'S APPROVAL OF CLEANING SCHEDULE AND LIST THE ORDER IN WHICH THE STORM DRAIN AND AIR DUCTS SYSTEM WILL BE CLEANED AND THE METHOD TO BE EMPLOYED.
4. AT NO TIME SHALL THE CONTRACTOR BLOCK TRAFFIC LANES DESIGNATED AS THRU LANES IN THE TRAFFIC CONTROL PLAN. THE CONTRACTOR SHALL KEEP THE THRU TUNNEL LANES OPEN IN BOTH DIRECTIONS AT ALL TIMES.
5. CLEANING OPERATIONS SHALL BE CONDUCTED IN ACCORDANCE WITH APPROVED TRAFFIC CONTROL AND CONSTRUCTION SEQUENCE.
6. THE CONTRACTOR SHALL PROVIDE INLET PROTECTION AFTER THE INLETS HAVE BEEN CLEANED, SEE DETAIL BELOW.
7. PRECAUTIONS SHALL BE TAKEN TO PREVENT WATER FROM ACCUMULATING ON THE ROADWAY AND ROAD SHOULDERS DURING CLEANING OF STROM DRAIN/AIR DUCT. IF FLOODING OCCURS THE CONTRACTOR SHALL REMOVE THE WATER IMMEDIATELY BY PUMPING THE WATER INTO STORM DRAINS. AT NO TIME SHALL STANDING WATER BE ALLOWED TO REMAIN ON THE ROADWAY.
8. STATIONING IS ESTABLISHED ACCORDING TO THE SCHEDULE DESIGNATED ROADWAY.

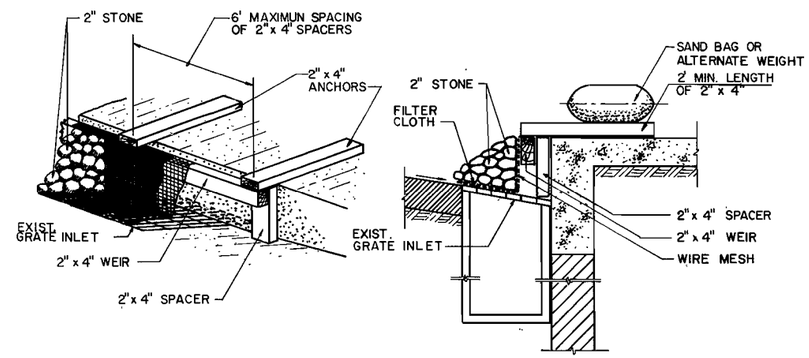

INLET PROTECTION DETAIL
SEE NOTE 6 (N.T.S.)

TIPPETTS.ABBETT.McCARTHY.STRATTON
ENGINEERS, ARCHITECTS AND PLANNERS
IN ASSOCIATION WITH:
FLEMING CORPORATION

NO	DESCRIPTION	NAME	DATE

REVISIONS

D.C. DEPARTMENT OF PUBLIC WORKS
BUREAU OF TRANSPORTATION CONSTRUCTION SERVICES
DESIGN AND ENGINEERING DIVISION

I-395 CENTER LEG OF THE INNER LOOP
REHABILITATION OF
THE MALL TUNNEL

STORM DRAIN/AIR DUCT CLEANING SCHEDULE

PROJECT ENG. G.M.
DESIGNED BY A.M.J.
CHECKED BY G.M.
DRAWN BY M.W.
PROJECT MGR. I.B.

DIVISION CHIEF
DATE
FILE 1142

F.H.W.A. REG. NO.	STATE	FED. AID PROJECT NO.	SHEET NO.	TOTAL SHEETS
3	D.C.	IR-395-1(150)	20	199

TABULATION OF SIGNS

(THESE SIGNS TO BE MOUNTED ON WOOD POST)

ALT	M4-1a 24"x 12"
SOUTH	M3-3 (INTERSTATE) 24"x 12"
NORTH	M3-1 (INTERSTATE) 24"x 12"
→	M6-1 (INTERSTATE) 21"x 15"
↑	M6-3 (INTERSTATE) 21"x 15"
INTERSTATE 395	M1-1 30"x 24"
HC	R14-3 24"x24"
13'-0"	W12-2 36"x36"
↗	M6-2 (INTERSTATE) 21"x 15"
↖	M6-2 (INTERSTATE) 21"x 15"
TUNNEL	36"x 12"

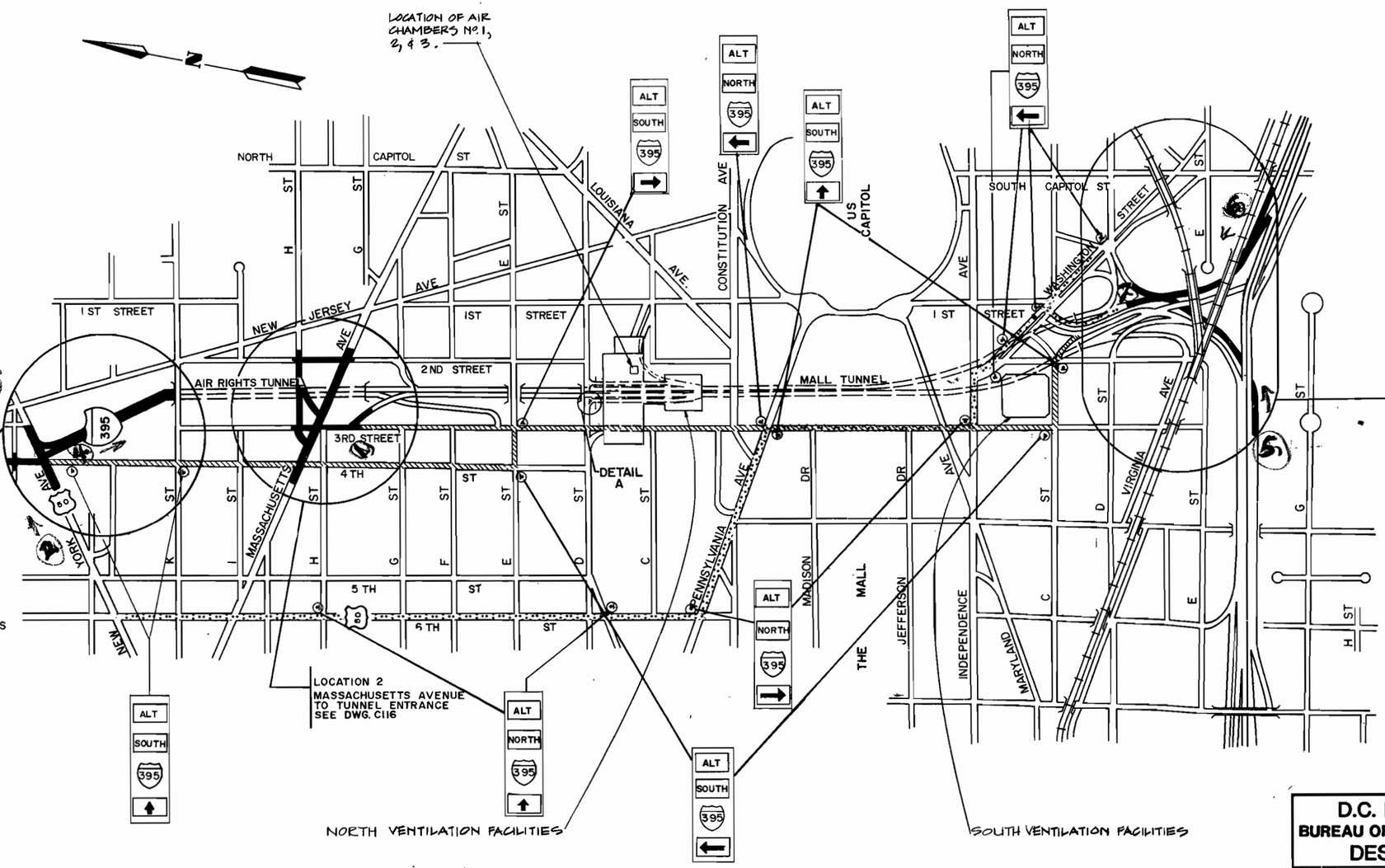

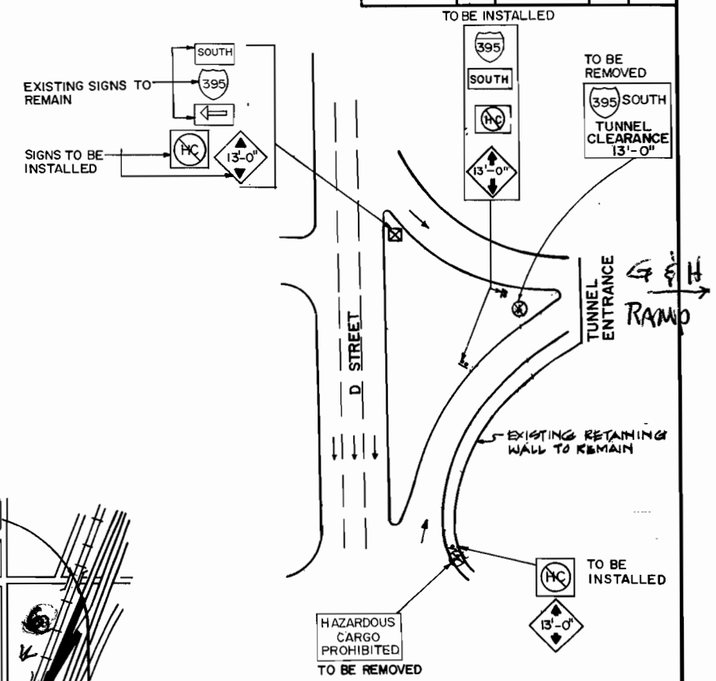

DETAIL A

N.T.S.

LEGEND

- ⊗ EXISTING SIGN TO BE REMOVED
- ⊠ EXISTING SIGN TO BE MODIFIED
- ◄ NEW SIGN TO BE INSTALLED

LOCATION 3
RAMP "A" AND RAMP "D" NORTH TO TUNNEL
SEE DWG C117.

OVERHEIGHT VEHICLE DETOUR LEGEND

- ALTERNATE 395 NORTH FOR OVER-HEIGHT VEHICLES.
- ALTERNATE 395 SOUTH FOR OVER-HEIGHT VEHICLES.
- APPROACHES TO MALL TUNNEL SUBJECT TO OVER-HEIGHT DETECTION SYSTEM.

NOTES:

CONTRACTOR TO REMOVE ALL EXISTING ALTERNATE I-395 SIGNS WITHIN THE PROJECT LIMITS AS DIRECTED BY THE ENGINEER.

D.C. DEPARTMENT OF PUBLIC WORKS
BUREAU OF TRANSPORTATION CONSTRUCTION SERVICES
DESIGN AND ENGINEERING DIVISION

I-395 CENTER LEG OF THE INNER LOOP
REHABILITATION OF
THE MALL TUNNEL

OVER-HEIGHT DETECTION SYSTEM
GENERAL SITE/LOCATION PLAN

PROJECT ENG. G.M.
DESIGNED BY R.A.
CHECKED BY G.M.
DRAWN BY H.S.
PROJECT MGR. I.B.

DIVISION CHIEF
DATE
FILE 1142

NO	DESCRIPTION	NAME	DATE

TIPPETTS·ABBETT·McCARTHY·STRATTON
ENGINEERS, ARCHITECTS AND PLANNERS
IN ASSOCIATION WITH:
FLEMING CORPORATION

FEDERAL REG. NO.	STATE	FED AID PROJECT NO.	SHEET NO.	TOTAL SHEETS
3	D.C.	IR-395-1(150)	22	199

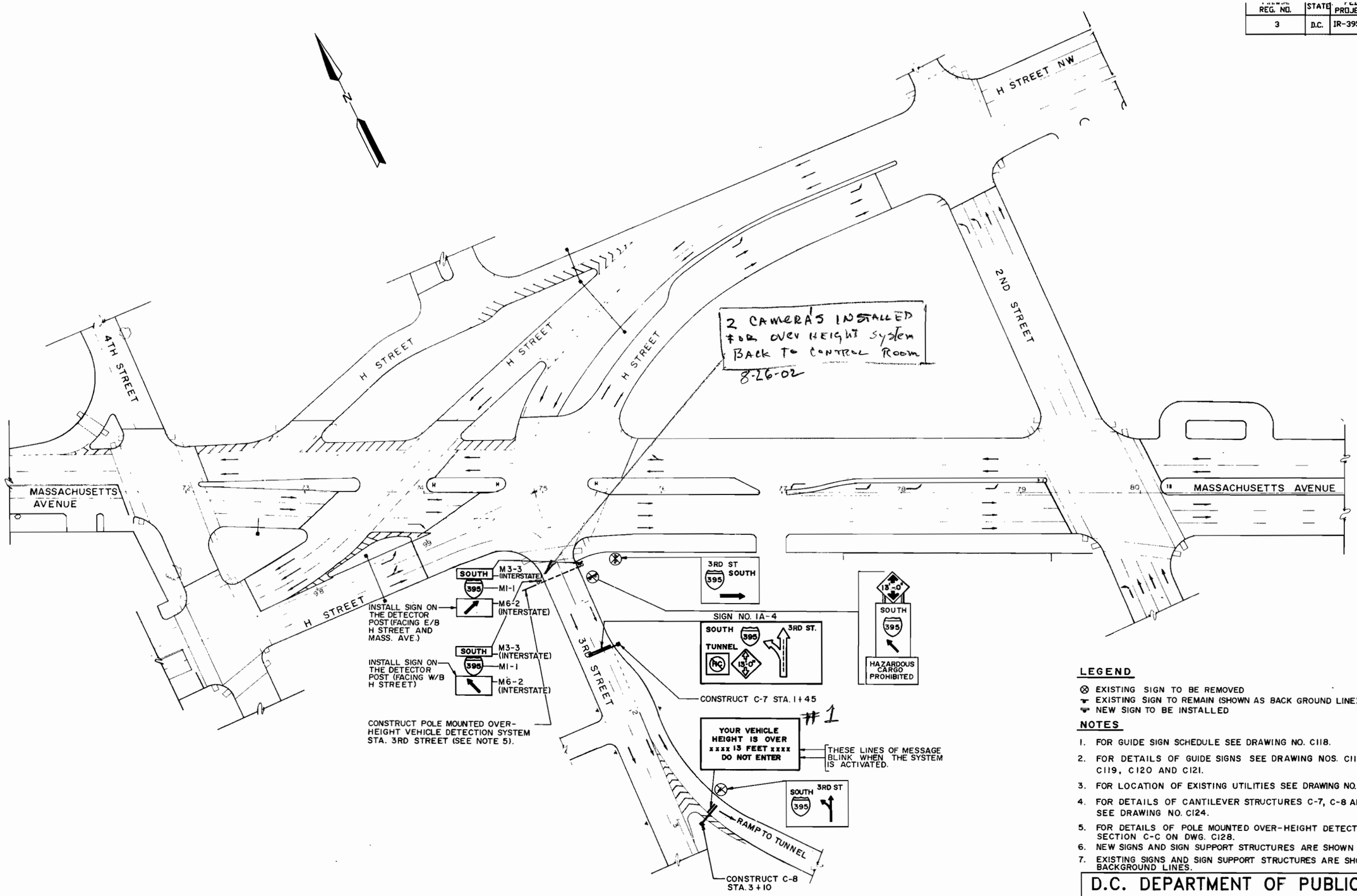

PLAN

SCALE: 1" = 40'

LEGEND

- ⊗ EXISTING SIGN TO BE REMOVED
- EXISTING SIGN TO REMAIN (SHOWN AS BACK GROUND LINE)
- NEW SIGN TO BE INSTALLED

NOTES

1. FOR GUIDE SIGN SCHEDULE SEE DRAWING NO. C118.
2. FOR DETAILS OF GUIDE SIGNS SEE DRAWING NOS. C114, C119, C120 AND C121.
3. FOR LOCATION OF EXISTING UTILITIES SEE DRAWING NO. C123.
4. FOR DETAILS OF CANTILEVER STRUCTURES C-7, C-8 AND SIGN SIZES SEE DRAWING NO. C124.
5. FOR DETAILS OF POLE MOUNTED OVER-HEIGHT DETECTOR, SEE SECTION C-C ON DWG. C128.
6. NEW SIGNS AND SIGN SUPPORT STRUCTURES ARE SHOWN IN SOLID LINES.
7. EXISTING SIGNS AND SIGN SUPPORT STRUCTURES ARE SHOWN AS BACKGROUND LINES.

D.C. DEPARTMENT OF PUBLIC WORKS
BUREAU OF TRANSPORTATION CONSTRUCTION SERVICES
DESIGN AND ENGINEERING DIVISION

I-395 CENTER LEG OF THE INNER LOOP
REHABILITATION OF
THE MALL TUNNEL

OVER-HEIGHT DETECTORS
MASSACHUSETTS AVENUE
TO TUNNEL ENTRANCE
LOCATION-2

PROJECT ENG. G.M.
DESIGNED BY R.A.
CHECKED BY G.M.
DRAWN BY H.A.S.
PROJECT MGR. I.B.

DIVISION CHIEF
DATE
FILE 1142

TIPPETTS.ABBETT.McCARTHY.STRATTON
ENGINEERS, ARCHITECTS AND PLANNERS
IN ASSOCIATION WITH:
FLEMING CORPORATION

NO	DESCRIPTION	NAME	DATE

REVISIONS

REG. NO.	STATE	PROJECT NO.	NO.	SHEETS
3	D.C.	IR-395-1(150)	23	199

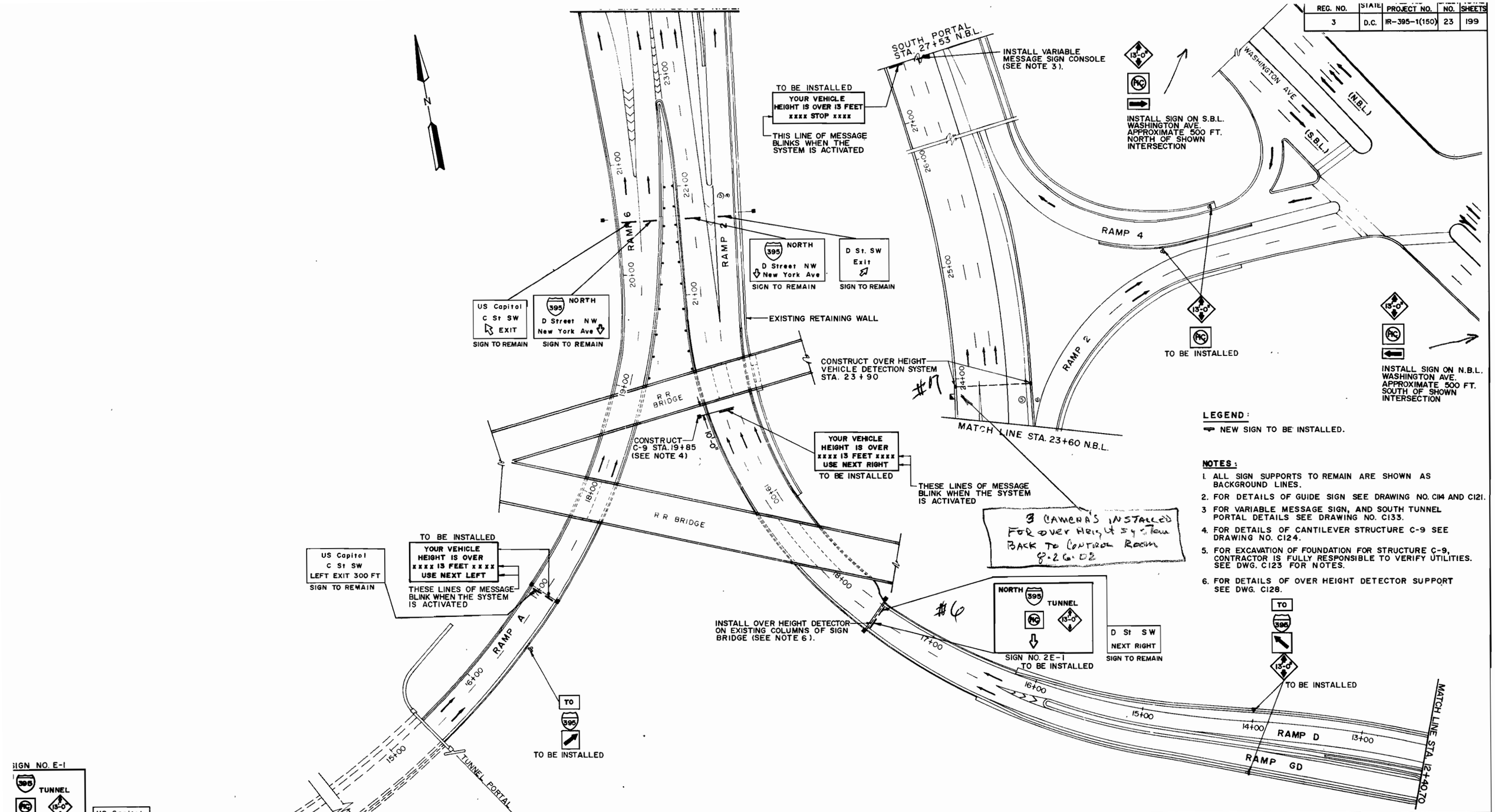

PLAN

SCALE: 1" = 40'

LEGEND:

NEW SIGN TO BE INSTALLED.

NOTES:

1. ALL SIGN SUPPORTS TO REMAIN ARE SHOWN AS BACKGROUND LINES.
2. FOR DETAILS OF GUIDE SIGN SEE DRAWING NO. C114 AND C121.
3. FOR VARIABLE MESSAGE SIGN, AND SOUTH TUNNEL PORTAL DETAILS SEE DRAWING NO. C133.
4. FOR DETAILS OF CANTILEVER STRUCTURE C-9 SEE DRAWING NO. C124.
5. FOR EXCAVATION OF FOUNDATION FOR STRUCTURE C-9, CONTRACTOR IS FULLY RESPONSIBLE TO VERIFY UTILITIES. SEE DWG. C123 FOR NOTES.
6. FOR DETAILS OF OVER HEIGHT DETECTOR SUPPORT SEE DWG. C128.

TIPPETTS.ABBETT.McCARTHY.STRATTON
ENGINEERS, ARCHITECTS AND PLANNERS
IN ASSOCIATION WITH:
FLEMING CORPORATION

NO	DESCRIPTION	NAME	DATE

REVISIONS

D.C. DEPARTMENT OF PUBLIC WORKS
BUREAU OF TRANSPORTATION CONSTRUCTION SERVICES
DESIGN AND ENGINEERING DIVISION

I-395 CENTER LEG OF THE INNER LOOP REHABILITATION OF
THE MALL TUNNEL

OVER-HEIGHT DETECTORS
RAMP "A" AND RAMP "D" TO
SOUTH PORTAL LOCATION - 3

PROJECT ENG. G.M.
DESIGNED BY R.A.
CHECKED BY G.M.
DRAWN BY M.W.
PROJECT MGR. L.B.

DIVISION CHIEF
DATE
FILE 1142

F.H.W.A. REG. NO.	STATE	FED AID PROJECT NO.	SHEET NO.	TOTAL SHEETS
3	D.C.	IR-395-1(150)	24	199

GUIDE SIGN SCHEDULE

LOCATION	SIGN DATA: SIGN NO.	SIGN SIZE: LENGTH	SIGN SIZE: WIDTH	LEGEND	LEGEND SIZE: U.C.	L.C.	C.L.	N	ALPHABET SERIES	SHIELD	ARROW	BRDR	SIGN TYPE	COLORS: BACKGRD	COLORS: LEGEND	SUPPORT DATA	SUMMARY OF SIGN AREAS (SQ. FT.) TYPE A	NO. OF SIGNS REQD.	REMARKS
W YORK AVENUE ST BOUND STA 22+70 I C-1 AND WEST BOUND A. 37+00 ON C-6	1A-1 and 2A-3	16'-0"	9'-0"	395 TUNNEL; HC; 13'-0"			10"	12"	E	M1-1 30"x24"		2"	A	GREEN (R)	WHITE (R)	OVERHEAD TRUSS	144.0	2	HAZARDOUS CARGO PROHIBITION SIGN IS R14-3 (24"x 24") VERTICAL CLEARANCE WARNING SIGN IS W12-2 (36"x36")
W YORK AVENUE ST BOUND STA. 28+74 C-3	1A-2	21'-0"	10'-0"	EAST 50 Annapolis; 395 SOUTH TUNNEL	10.67"	8"	10.67" 10.67"		E (M)	M1-4 24"x24" M1-1 30"x24"		2"	A	GREEN (R)	WHITE (R)	OVERHEAD TRUSS	210.0	1	
H STREET SOUTH UND STA. 1+23 ON 4	1A-3	23'-0"	12'-6"	SOUTH 395 TUNNEL; 13'-0"; 4TH ST.			12" 12"	12" 12"	C	M1-1 45"x36"		2"	A	GREEN (R)	WHITE (R)	OVERHEAD TRUSS	287.50	1	VERTICAL CLEARANCE WARNING SIGN IS W12-2 (36"x36")
W YORK AVENUE ST BOUND STA. 31+30 I P-1	2A-1A	20'-0"	13'-6"	4TH ST. SOUTH 395 TUNNEL			12" 12" 12"	12"	C	M1-1 45"x 36"		2"	A	GREEN (R)	WHITE (R)	OVERHEAD TRUSS	270.0	1	
W YORK AVENUE ST BOUND STA. 31+30 I P-1	2A-1B	16'-0"	12'-6"	50 WEST TO 50 SOUTH			12" 12"		C	M1-4 36"x36" M1-4 36"x36"	STD DOWN ARROW	2"	A	GREEN (R)	WHITE (R)	OVERHEAD TRUSS	200.0	1	
W YORK AVENUE ST BOUND STA. 33+96 I P-2	2A-2	16'-0"	10'-6"	50 WEST TO DOWNTOWN			12" 12"		C	M1-4 36"x36"	STD DOWN ARROW	2"	A	GREEN (R)	WHITE (R)	OVERHEAD TRUSS	168.0	1	
W YORK AVENUE ST BOUND STA. 40+00 W YORK AVENUE ST BOUND STA 20+00 (±)	—	2'-6"	3'-0"	TRUCK OVER 13 FEET USE 4TH STREET			4" 4" 4" 4" 4"	4" 4"	B			1/2"	C	WHITE (R)	BLACK	GROUND MOUNTED WOOD POST	7.5	4	
UTH BOUND LANE NNEL A. 98+15	—	2'-0"	2'-0"	OVER 13'-0" HEIGHT			4" 4"	4"	D			1/2"	C	WHITE (R)	BLACK	GROUND MOUNTED WOOD POST	4.0	2	
D STREET STA. 1+45 C-7	1A-4	22'-0"	12'-6"	SOUTH 395 TUNNEL; HC; 13'-0"; 3RD ST.			12" 12"	12" 12"	C	M1-1 45"x36"		2"	A	GREEN (R)	WHITE (R)	OVERHEAD TRUSS	275.0	1	HAZARDOUS CARGO PROHIBITION SIGN IS R14-3 (24"x24") VERTICAL CLEARANCE WARNING SIGN IS W12-2 (36"x36")
MP A STA. 10+65 ON STING TUNNEL PORTAL D RAMP D STA. 17+55 ISTING SIGN BRIDGE	E-1 and 2E-1	12'-6"	9'-0"	NORTH 395 TUNNEL; HC; 13'-0"			8" 8"	9"	C	M1-1 30"x24"	STD DOWN ARROW	2"	A	GREEN (R)	WHITE (R)	TUNNEL PORTAL AND EXISTING OVERHEAD TRUSS	112.5	2	HAZARDOUS CARGO PROHIBITION SIGN IS R14-3 (24"x 24") VERTICAL CLEARANCE WARNING SIGN W12-2 IS REDUCED TO 3/4" SIZE
UTH BOUND LANES A. 37+04.28 AND A. 48+80.15	1A and 3A	17'-0"	1'-9"	TO I-295			12" 16"	16"	E (M)		STD DOWN ARROW REDUCED TO 3/4 SIZE	1"	A	GREEN (R)	WHITE (R)	TUNNEL CEILING	29.75	2	
UTH BOUND LANES A. 37+04.28 AND A. 48+80.15	1-B and 3-B	17'-8"	1'-9"	I-395 SOUTH			16" 12"	16"	E (M)		STD DOWN ARROW REDUCED TO 3/4 SIZE	1"	A	GREEN (R)	WHITE (R)	TUNNEL CEILING	30.92	2	
UTH BOUND LANES A. 37+04.28	1C	15'-0"	1'-9"	2nd St SW	16"	12"		16"	E (M)		UP ARROW 20" 45°	1"	A	GREEN (R)	WHITE (R)	TUNNEL CEILING	26.25	1	
RTH BOUND LANES A. 36+44.50	2A 2B 2C	10'-6" 14'-0" 9'-6"	2'-0"	D St NW US Capitol NEXT RIGHT	16"	12"	10"		E (M)			1"	A	GREEN (R)	WHITE (R)	TUNNEL CEILING	68.33	1	
UTH BOUND LANES A. 48+80.15	3C	22'-5"	1'-9"	2nd St SW NEXT RIGHT	16"	12"	10"	16"	E (M)			1"	A	GREEN (R)	WHITE (R)	TUNNEL CEILING	39.23	1	
RTH BOUND LANES A. 47+21.40	4A 4B	10'-6" 16'-10"	2'-0"	D St NW US Capitol	16"	12"			E (M)		UP ARROW 20" 45°	1"	A	GREEN (R)	WHITE (R)	TUNNEL CEILING	54.83	1	
MP J A. 20+80	5A	7'-6"	1'-0"	D St NW	8"	6"			E (M)		UP ARROW 9 3/4" 0°	1/2"	A	GREEN (R)	WHITE (R)	TUNNEL CEILING	7.50	1	
MP J A. 20+80	5B	9'-9"	1'-1"	U S Capitol	8"	6"			E (M)		UP ARROW 14.14" 45°	1/2"	A	GREEN (R)	WHITE (R)	TUNNEL CEILING	10.56	1	
W YORK AVE. EAST BOUND A. 20+00 (±) & ST BOUND STA. 40+00 (±)	—	3'-0"	1'-0"	TUNNEL			8"		C			5/8"	A	WHITE (R)	BLACK	GROUND MOUNTED WOOD POST	3.0	4	

LEGEND:

R - REFLECTORIZED
U.C. - UPPER CASE
L.C. - LOWER CASE
C.L. - CAPITOL LETTERS

N - NUMERAL DIMENSIONS SHOWN IN SCHEDULE ARE INDIVIDUAL NUMERAL HEIGHTS
BRDR - BORDER

SIGN TYPE - SEE ITEM 626.02 OF D.C. STANDARD SPECIFICATION FOR HIGHWAYS AND STRUCTURES 1974.

GENERAL NOTES

1. FOR GUIDE SIGN DETAILS SEE DWG. NOS. C119, C120 AND C121.
2. ALL LETTERS AND NUMERALS SHALL CONFORM TO THE FEDERAL HIGHWAY ADMINISTRATION'S "STANDARD ALPHABETS FOR HIGHWAY SIGNS".
3. THE CONTRACTOR WILL CONSTRUCT SIGN FOUNDATIONS IN A MANNER WHICH WILL NOT INTERRUPT THE SERVICES OF EXISTING UNDERGROUND UTILITIES.
4. FOR POSITIONING AND VERTICAL CLEARANCES OF GUIDE SIGNS ON OVERHEAD TRUSS SEE DWG. NO.'S C124 AND C125 AND FOR TUNNEL SIGNS SEE DWG. NO. C131.
5. REFLECTIVE SHEETING FOR TRAFFIC SIGN PANELS SHALL MEET REQUIREMENTS OF AASHTO M268, TYPE III HIGH INTENSITY.

TIPPETTS·ABBETT·McCARTHY·STRATTON
ENGINEERS, ARCHITECTS AND PLANNERS
IN ASSOCIATION WITH:
FLEMING CORPORATION

NO.	DESCRIPTION	NAME	DATE

REVISIONS

D.C. DEPARTMENT OF PUBLIC WORKS
BUREAU OF TRANSPORTATION CONSTRUCTION SERVICES
DESIGN AND ENGINEERING DIVISION

I-395 CENTER LEG OF THE INNER LOOP REHABILITATION OF THE MALL TUNNEL

GUIDE SIGN SCHEDULE

PROJECT ENG. G.M.
DESIGNED BY R.A.
CHECKED BY G.M.
DRAWN BY H.S.
PROJECT MGR. I.B.

DIVISION CHIEF
DATE
FILE 1142

F.H.W.A. REG. NO.	STATE	FED AID PROJECT NO.	SHEET NO.	TOTAL SHEETS
3	D.C.	IR-395-1(150)	25	199

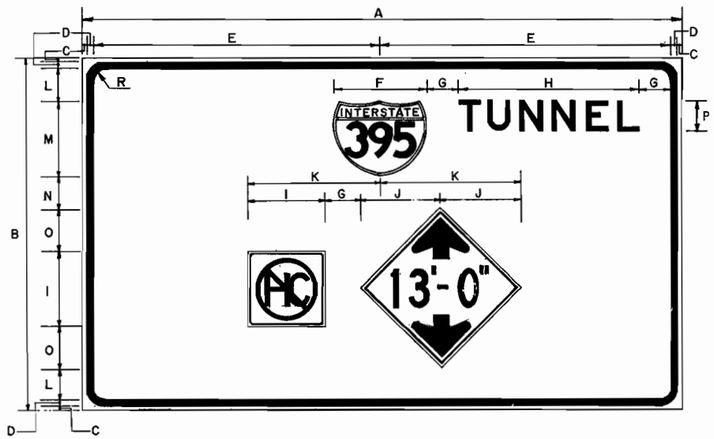

DIMENSION	A	B	C	D	E	F	G	H	I	J	K	L	M	N	O	P	R
INCHES	192	108	1 1/4	2	92 3/4	30	10	57 3/4	24	25 1/2	42 1/2	9	24	8 1/2	13 1/2	10	10

LEGEND - WHITE (TYPE - E SERIES)
BACKGROUND - GREEN

STA. 22+70 N.Y. AVE. ON C-1
STA. 37+00 N.Y. AVE. ON C-6

SIGN NO.: 1A-1 AND 2A-3

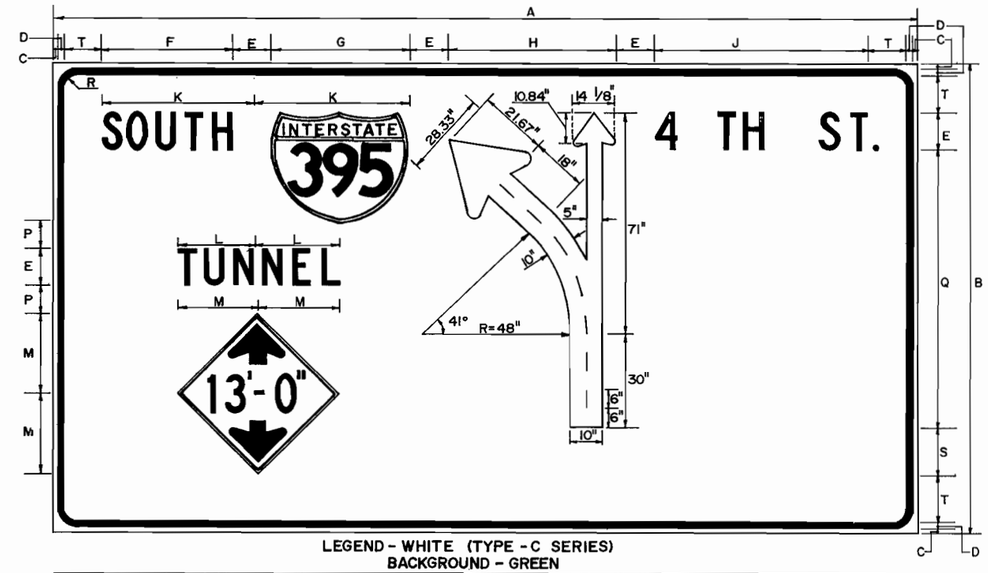

LEGEND - WHITE (TYPE - C SERIES)
BACKGROUND - GREEN

DIMENSION	A	B	C	D	E	F	G	H	J	K	L	M	N	O	P	Q	R	S	T
INCHES	276	150	1 1/2	2	12	42	45	54	66	49 1/2	25	25 1/2	25	7	9	89	12	16	13

STA. 1+23 4th STREET ON C-4
SIGN NO.: 1A-3

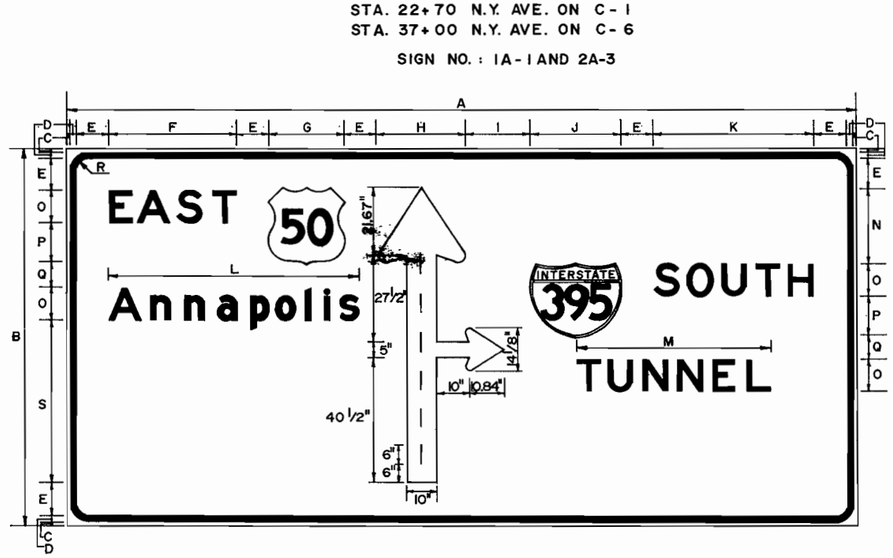

DIMENSION	A	B	C	D	E	F	G	H	I	J	K	L	M	N	O	P	Q	R	S
INCHES	252	120	5/8	2	10	40 7/8	24	28 1/4	21 5/16	30	51 3/4	80 5/16	61 3/4	23 11/16	10 2/3	13 1/3	8	12	52

LEGEND - WHITE (TYPE - E(M) SERIES)
BACKGROUND - GREEN

STA. 28+74 N.Y. AVE. ON C-3

SIGN NO.: 1A-2

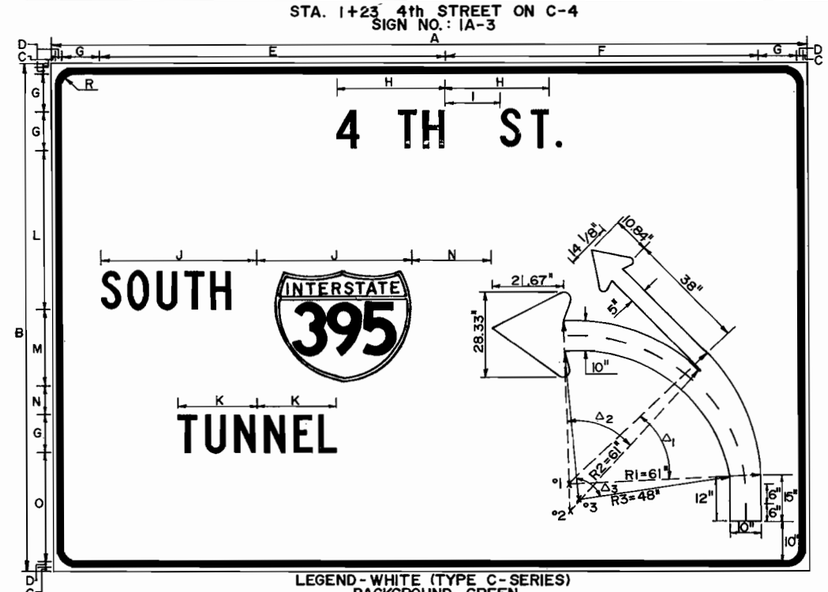

LEGEND - WHITE (TYPE C - SERIES)
BACKGROUND - GREEN

DIMENSION	A	B	C	D	E	F	G	H	I	J	K	L	M	N	O	R
INCHES	240	162	1 11/16	2	110	98 5/8	12	33	18	49 1/2	25	39	24	9	34 5/8	12

ANGLE	Δ1	Δ2	Δ3
DEGREE	41°30'	43°30'	90°

STA. 31+30 N.Y. AVE. ON P-1

SIGN NO.: 2A-1A

NOTE:

1. FOR GUIDE SIGN LOCATIONS AND MISCELLANEOUS DETAILS SEE GUIDE SIGN SCHEDULE, DRAWING NO. C118.

SCALE : 1/2" = 1'-0"

TIPPETTS·ABBETT·McCARTHY·STRATTON
ENGINEERS, ARCHITECTS AND PLANNERS
IN ASSOCIATION WITH:
FLEMING CORPORATION

NO.	DESCRIPTION	NAME	DATE

REVISIONS

D.C. DEPARTMENT OF PUBLIC WORKS
BUREAU OF TRANSPORTATION CONSTRUCTION SERVICES
DESIGN AND ENGINEERING DIVISION

I-395 CENTER LEG OF THE INNER LOOP REHABILITATION OF THE MALL TUNNEL

PROJECT ENG. G.M.
DESIGNED BY R.A.
CHECKED BY G.M.
DRAWN BY M.W.
PROJECT MGR. I.B.

DIVISION CHIEF

DATE

GUIDE SIGN DETAILS - 1

FILE 1142

F.H.W.A. REG. NO.	STATE	FED AID PROJECT NO.	SHEET NO.	TOTAL SHEETS
3	D.C.	IR-395-1(150)	26	199

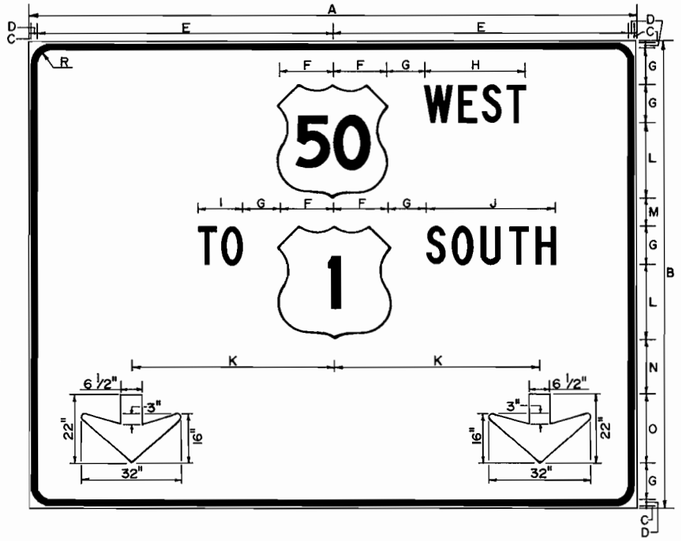

DIMENSION	A	B	C	D	E	F	G	H	I	J	K	L	M	N	O	R
INCHES	192	150	1/2	2	93 1/2	18	12	33 5/8	15	42	66	24	9	18	22	12

LEGEND - WHITE (TYPE - C SERIES)
BACKGROUND - GREEN

STA. 31+30 N.Y. AVE. ON P-1

SIGN NO.: 2A-1B

SCALE : 1/2"=1'-0"

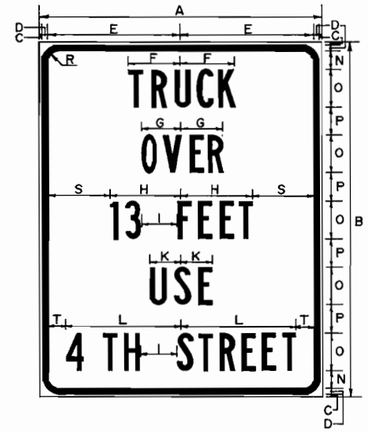

DIMENSION	A	B	C	D	E	F	G	H	I	K	L	N	O	P	R	S	T
INCHES	30	36	7/16	1/2	14 1/16	5 1/2	4 5/16	7 7/16	4	3 1/5	12	2	4	3	3 3/4	6 5/8	13/16

LEGEND - BLACK (TYPE - B SERIES)
BACKGROUND - WHITE

STA. 40+00 N.Y. AVE. ON POLE
STA. 20+00 N.Y. AVE. ON POLE
SCALE: 1 1/2"=1'-0"

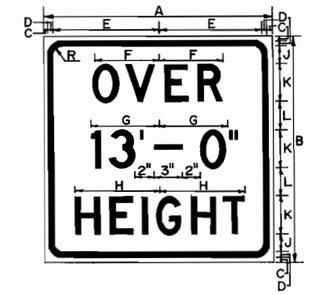

DIMENSION	A	B	C	D	E	F	G	H	J	K	L	R
INCHES	24	24	1/2	1/2	11	6 9/16	7 1/4	8 15/16	2	4	3	3

LEGEND - BLACK (TYPE - D SERIES)
BACKGROUND - WHITE

STA. 98+15 S.B.L. TUNNEL ON POLE

SCALE: 1 1/2" = 1'-0"

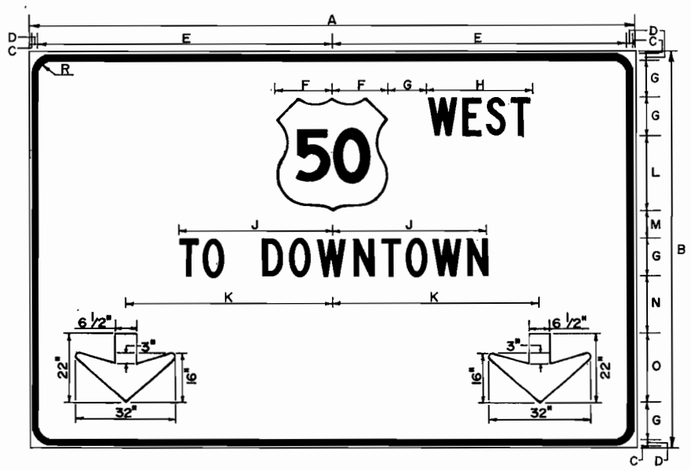

DIMENSION	A	B	C	D	E	F	G	H	J	K	L	M	N	O	R
INCHES	192	126	1/2	2	93 1/2	18	12	33 7/8	49 3/8	66	24	9	18	22	12

LEGEND - WHITE (TYPE - C SERIES)
BACKGROUND - GREEN

STA. 33+96 N.Y. AVE. ON P-2

SIGN NO.: 2A-2

SCALE : 1/2"=1'-0"

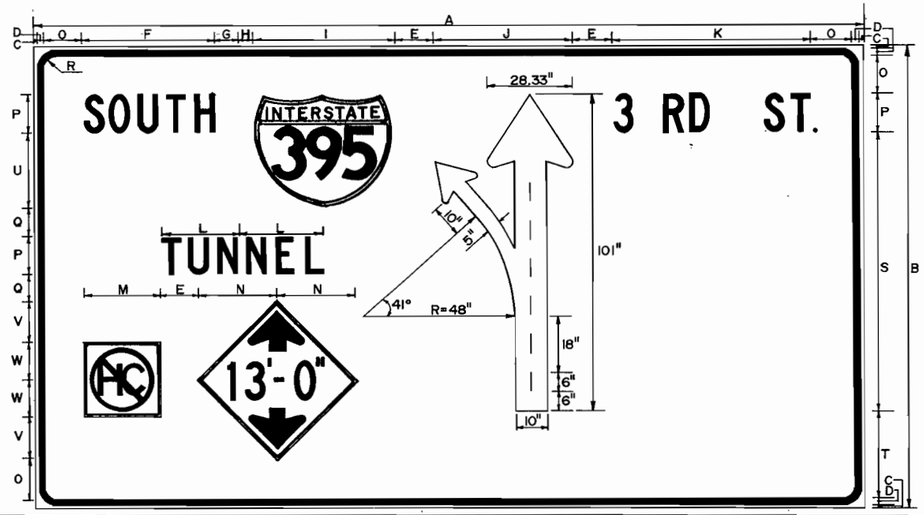

DIMENSION	A	B	C	D	E	F	G	H	I	J	K	L	M	N	O	P	Q	R	S	T	U	V	W
INCHES	264	150	1	2	12	42	7 1/2	4 1/2	45	44	64	25	24	25 1/2	13 1/2	12	9	12	89	29 1/2	24	13 1/2	12

LEGEND - WHITE (TYPE - C SERIES)
BACKGROUND - GREEN

STA. 1+45 3 RD STREET ON C-7

SIGN NO.: 1A-4

SCALE : 1/2"=1'-0"

NOTE:

1. FOR GUIDE SIGN LOCATIONS AND MISCELLANEOUS DETAILS SEE GUIDE SIGN SCHEDULE, DRAWING NO. C118.

TIPPETTS·ABBETT·McCARTHY·STRATTON
ENGINEERS, ARCHITECTS AND PLANNERS
IN ASSOCIATION WITH:
FLEMING CORPORATION

NO.	DESCRIPTION	NAME	DATE

REVISIONS

D.C. DEPARTMENT OF PUBLIC WORKS
BUREAU OF TRANSPORTATION CONSTRUCTION SERVICES
DESIGN AND ENGINEERING DIVISION

I-395 CENTER LEG OF THE INNER LOOP REHABILITATION OF THE MALL TUNNEL

GUIDE SIGN DETAILS-2

PROJECT ENG. G.M.
DESIGNED BY R.A.
CHECKED BY G.M.
DRAWN BY M.W.
PROJECT MGR. I.B.

DIVISION CHIEF

DATE

FILE 1142

SHEET 26 OF 199

F.H.W.A. REG. NO.	STATE	FED AID PROJECT NO.	SHEET NO.	TOTAL SHEETS
3	D.C.	IR-395-1(150)	27	199

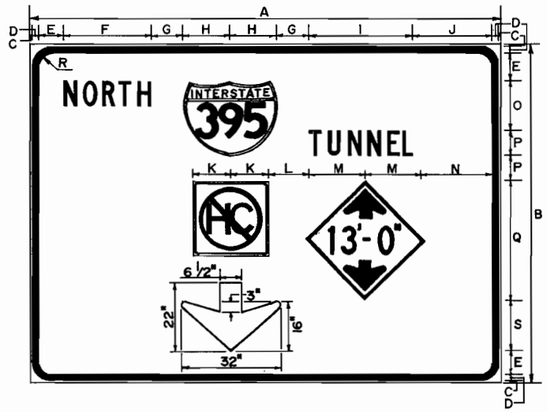

DIMENSION	A	B	C	D	E	F	G	H	I	J	K	L	M	N	O	P	Q	R	S
INCHES	150	108	7/8	2	8	27 5/16	10	15	32 7/8	25 9/16	12	13	19	20 7/16	16	8	38	12	16 1/4

LEGEND - WHITE (TYPE - C SERIES)
BACKGROUND - GREEN

STA. 10+65 RAMP A - EXISTING TUNNEL PORTAL
STA. 17+55 RAMP D - EXISTING SIGN BRIDGE

SIGN NO.: E-1 & 2E-1

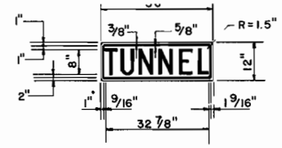

LEGEND - BLACK (NON-REFL.)
BACKGROUND - WHITE (REFL.)

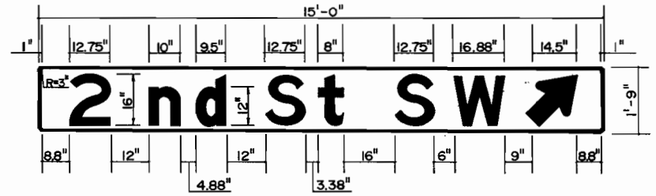

LEGEND - WHITE (TYPE - E AND E(M) SERIES)
BACKGROUND - GREEN

STA. 37+04.28 S.B.L.

SIGN NO.: 1C

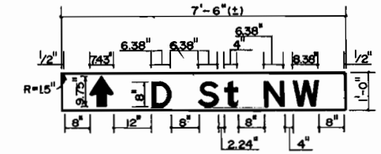

LEGEND - WHITE (TYPE - E AND E(M) SERIES)
BACKGROUND - GREEN
STA. 20+80 RAMP J
SIGN NO.: 5A

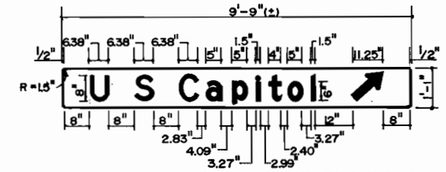

LEGEND - WHITE (TYPE - E AND E(M) SERIES)
BACKGROUND - GREEN
STA. 20+80 RAMP J
SIGN NO. 5B

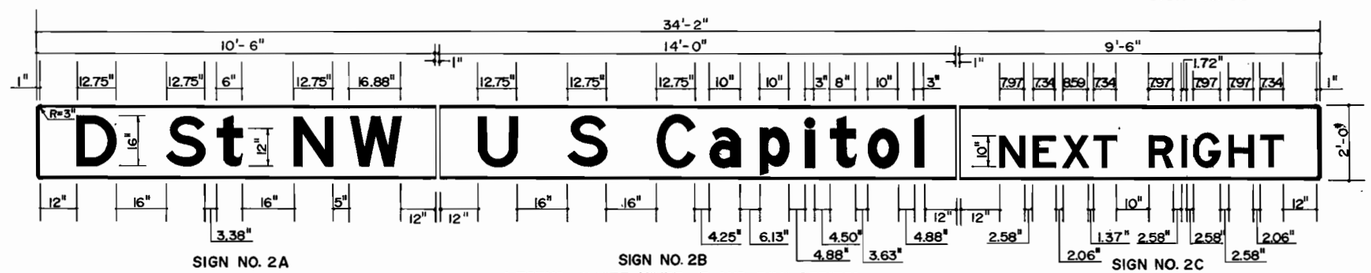

SIGN NO. 2A

SIGN NO. 2B
LEGEND - WHITE (TYPE - E AND E(M) SERIES)
BACKGROUND - GREEN
STA. 36+44.50 N.B.L.

SIGN NO. 2C

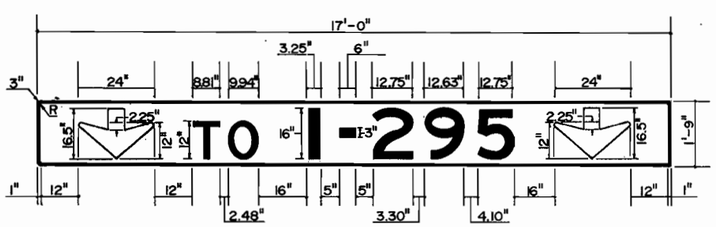

LEGEND - WHITE (TYPE - E AND E(M) SERIES)
BACKGROUND - GREEN

STA. 37+04.28 S.B.L.
SIGN NO. 1A

STA. 48+80.15 S.B.L.
SIGN NO. 3A

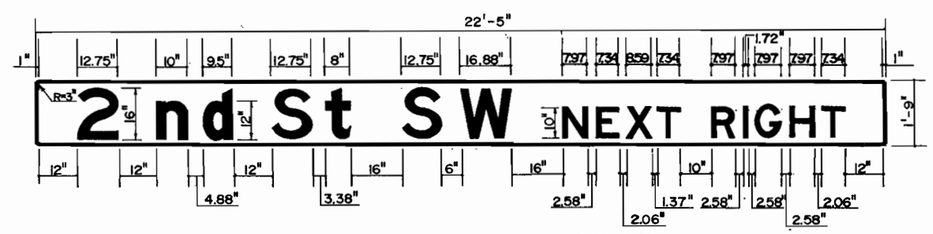

LEGEND - WHITE (TYPE - E AND E(M) SERIES)
BACKGROUND - GREEN
STA. 48+80.15 S.B.L.
SIGN NO.: 3C

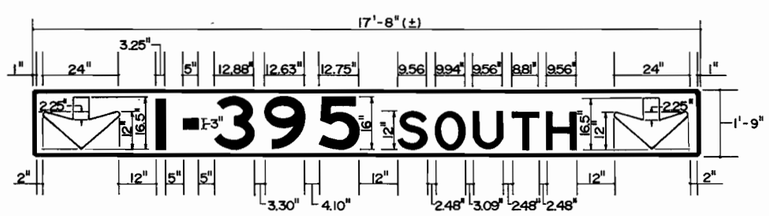

LEGEND - WHITE (TYPE - E AND E(M) SERIES)
BACKGROUND - GREEN

STA. 37+04.28 S.B.L.
SIGN NO. 1B

STA. 48+80.15 S.B.L.
SIGN NO. 3B

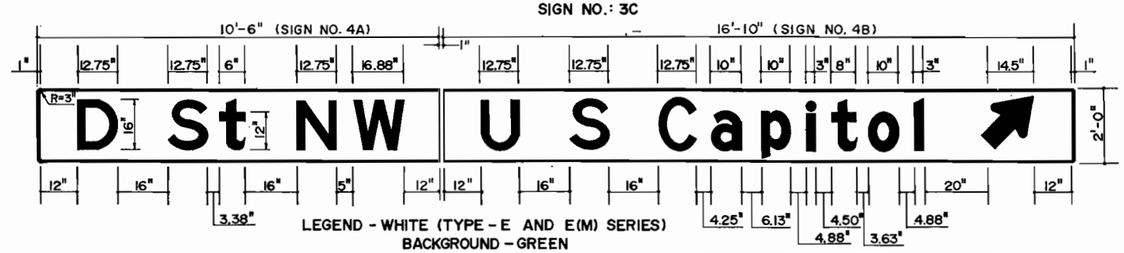

LEGEND - WHITE (TYPE - E AND E(M) SERIES)
BACKGROUND - GREEN
STA. 47+21.40 N.B.L.

NOTE:

1. FOR GUIDE SIGN LOCATIONS AND MISCELLANEOUS DETAILS SEE GUIDE SIGN SCHEDULE, DRAWING NO. C118, AND TUNNEL GUIDE SIGNS - LOCATIONS, DWG. C131.

SCALE: 1/2" = 1'-0"

TIPPETTS·ABBETT·McCARTHY·STRATTON
ENGINEERS, ARCHITECTS AND PLANNERS
IN ASSOCIATION WITH:
FLEMING CORPORATION

NO.	DESCRIPTION	NAME	DATE

REVISIONS

D.C. DEPARTMENT OF PUBLIC WORKS
BUREAU OF TRANSPORTATION CONSTRUCTION SERVICES
DESIGN AND ENGINEERING DIVISION

I-395 CENTER LEG OF THE INNER LOOP REHABILITATION OF THE MALL TUNNEL

GUIDE SIGN DETAILS-3

PROJECT ENG. G.M.
DESIGNED BY R.A.
CHECKED BY G.M.
DRAWN BY M.W.
PROJECT MGR. J.B.

DIVISION CHIEF
DATE
FILE 1142
SHEET 27 OF 199

F.H.W.A. REG. NO.	STATE	FED AID PROJECT NO.	SHEET NO.	TOTAL SHEETS
3	D.C.	IR-395-1(150)	28	199

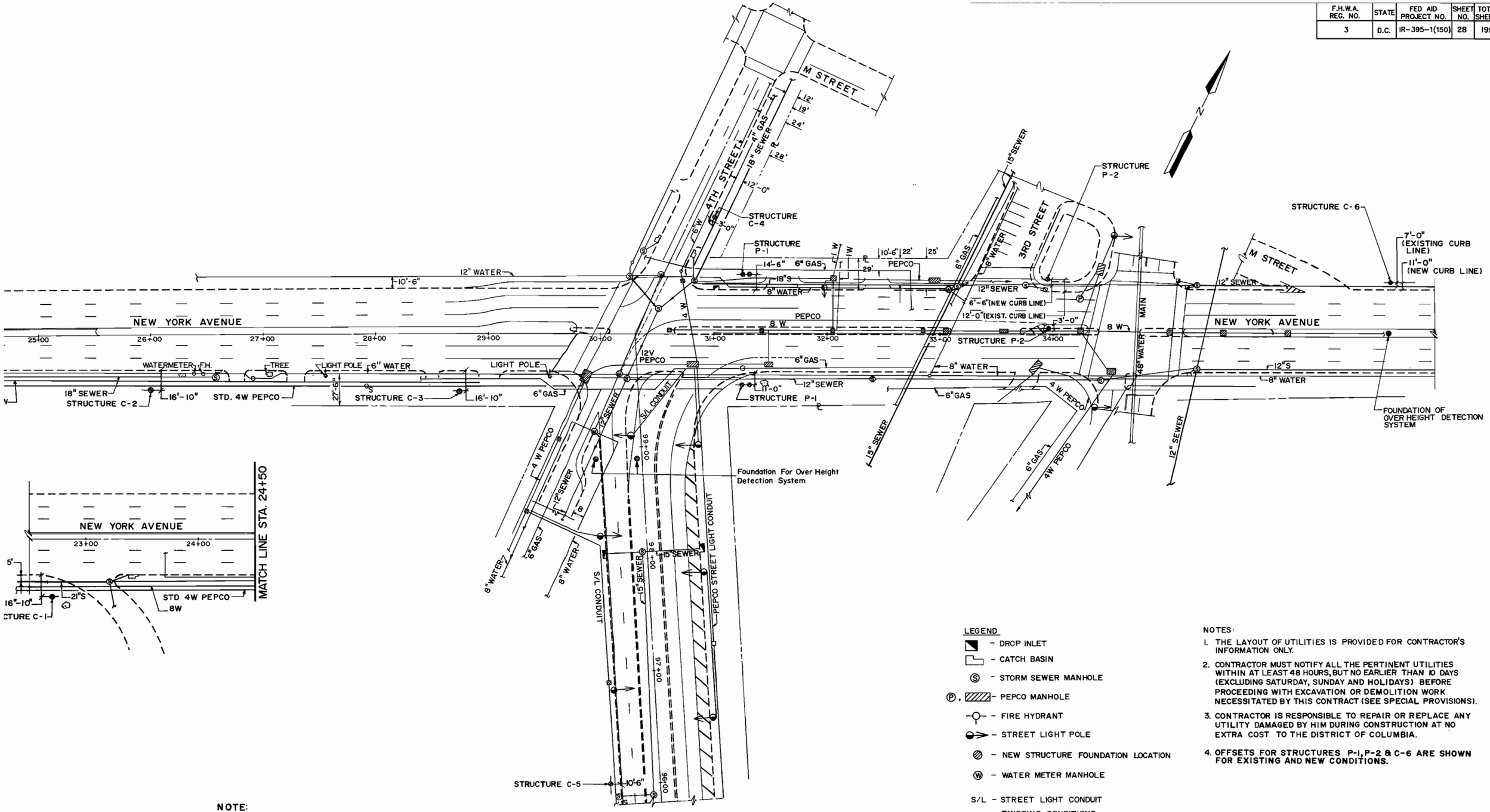

SCALE: 1" = 40'

NOTE:

The Layout of Utilities as Shown on this Drawing Has Been Provided by DC-DPW and the Appropriate Utility Companies. The Contractor is fully Responsible to Verify the Exact Locations of All Pertinent Utilities, See Notes this Drawing.

LEGEND

- DROP INLET
- CATCH BASIN
- STORM SEWER MANHOLE
- PEPCO MANHOLE
- FIRE HYDRANT
- STREET LIGHT POLE
- NEW STRUCTURE FOUNDATION LOCATION
- WATER METER MANHOLE
- S/L - STREET LIGHT CONDUIT
- EXISTING CONDITIONS
- NEW CONDITIONS AS PER FEDERAL AID PROJECT No. I-395 -1(148)

NOTES:

1. THE LAYOUT OF UTILITIES IS PROVIDED FOR CONTRACTOR'S INFORMATION ONLY.
2. CONTRACTOR MUST NOTIFY ALL THE PERTINENT UTILITIES WITHIN AT LEAST 48 HOURS, BUT NO EARLIER THAN 10 DAYS (EXCLUDING SATURDAY, SUNDAY AND HOLIDAYS) BEFORE PROCEEDING WITH EXCAVATION OR DEMOLITION WORK NECESSITATED BY THIS CONTRACT (SEE SPECIAL PROVISIONS).
3. CONTRACTOR IS RESPONSIBLE TO REPAIR OR REPLACE ANY UTILITY DAMAGED BY HIM DURING CONSTRUCTION AT NO EXTRA COST TO THE DISTRICT OF COLUMBIA.
4. OFFSETS FOR STRUCTURES P-1, P-2 & C-6 ARE SHOWN FOR EXISTING AND NEW CONDITIONS.

TIPPETTS.ABBETT.McCARTHY.STRATTON
ENGINEERS, ARCHITECTS AND PLANNERS
IN ASSOCIATION WITH:

NO	DESCRIPTION	NAME	DATE

D.C. DEPARTMENT OF PUBLIC WORKS
BUREAU OF TRANSPORTATION CONSTRUCTION SERVICES
DESIGN AND ENGINEERING DIVISION

I-395 CENTER LEG OF THE INNER LOOP REHABILITATION OF
THE MALL TUNNEL

EXISTING UTILITIES
NEW YORK AVENUE

PROJECT ENG. G.M.
DESIGNED BY R.A.
CHECKED BY G.M.
DRAWN BY H.A.S.
PROJECT MGR. I.B.

DIVISION CHIEF
DATE
FILE 1142

F.H.W.A. REG. NO.	STATE	FED AID PROJECT NO.	SHEET NO.	TOTAL SHEETS
3	D.C.	IR-395-1(150)	29	199

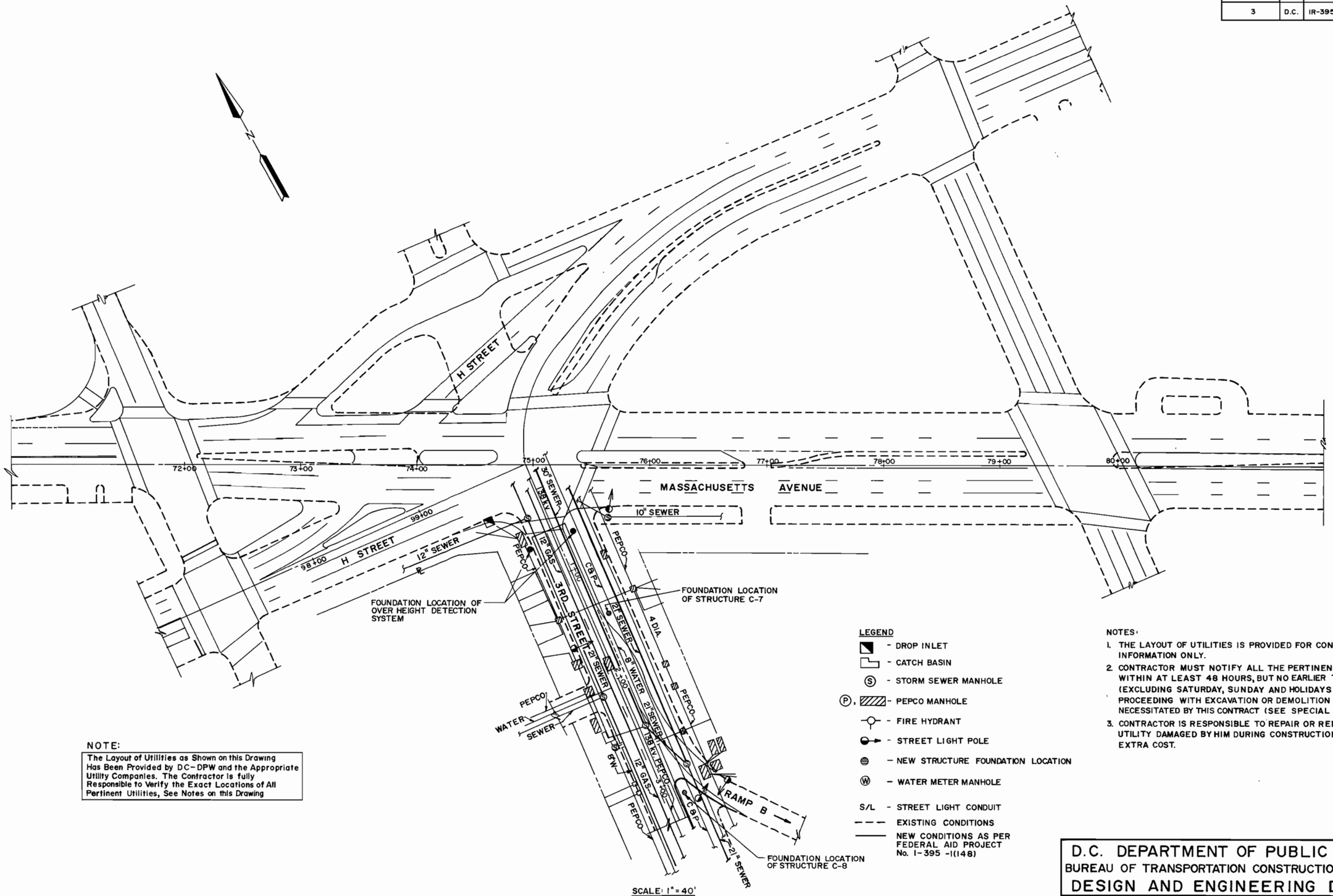

NOTE:

The Layout of Utilities as Shown on this Drawing Has Been Provided by DC-DPW and the Appropriate Utility Companies. The Contractor is fully Responsible to Verify the Exact Locations of All Pertinent Utilities, See Notes on this Drawing

LEGEND

- DROP INLET
- CATCH BASIN
- STORM SEWER MANHOLE
- PEPCO MANHOLE
- FIRE HYDRANT
- STREET LIGHT POLE
- NEW STRUCTURE FOUNDATION LOCATION
- WATER METER MANHOLE
- S/L - STREET LIGHT CONDUIT
- EXISTING CONDITIONS
- NEW CONDITIONS AS PER FEDERAL AID PROJECT No. I-395 -1(148)

NOTES:

1. THE LAYOUT OF UTILITIES IS PROVIDED FOR CONTRACTORS INFORMATION ONLY.
2. CONTRACTOR MUST NOTIFY ALL THE PERTINENT UTILITIES WITHIN AT LEAST 48 HOURS, BUT NO EARLIER THAN 10 DAYS (EXCLUDING SATURDAY, SUNDAY AND HOLIDAYS) BEFORE PROCEEDING WITH EXCAVATION OR DEMOLITION WORK NECESSITATED BY THIS CONTRACT (SEE SPECIAL PROVISIONS)
3. CONTRACTOR IS RESPONSIBLE TO REPAIR OR REPLACE ANY UTILITY DAMAGED BY HIM DURING CONSTRUCTION AT NO EXTRA COST.

D.C. DEPARTMENT OF PUBLIC WORKS
BUREAU OF TRANSPORTATION CONSTRUCTION SERVICES
DESIGN AND ENGINEERING DIVISION

I-395 CENTER LEG OF THE INNER LOOP REHABILITATION OF THE MALL TUNNEL

EXISTING UTILITES
MASSACHUSETTS AVENUE

PROJECT ENG. G.M.
DESIGNED BY R.A.
CHECKED BY G.M.
DRAWN BY H.A.S.
PROJECT MGR. I.B.

DIVISION CHIEF
DATE
FILE 1142

TIPPETTS·ABBETT·McCARTHY·STRATTON
ENGINEERS·ARCHITECTS AND PLANNERS
IN ASSOCIATION WITH:
FLEMING CORPORATION

NO.	DESCRIPTION	NAME	DATE

REVISIONS

REGION NO	STATE	FED. AID PROJECT NO	SHEET NO	TOTAL SHEETS
3	D.C.	IR-395-1(150)	30	199

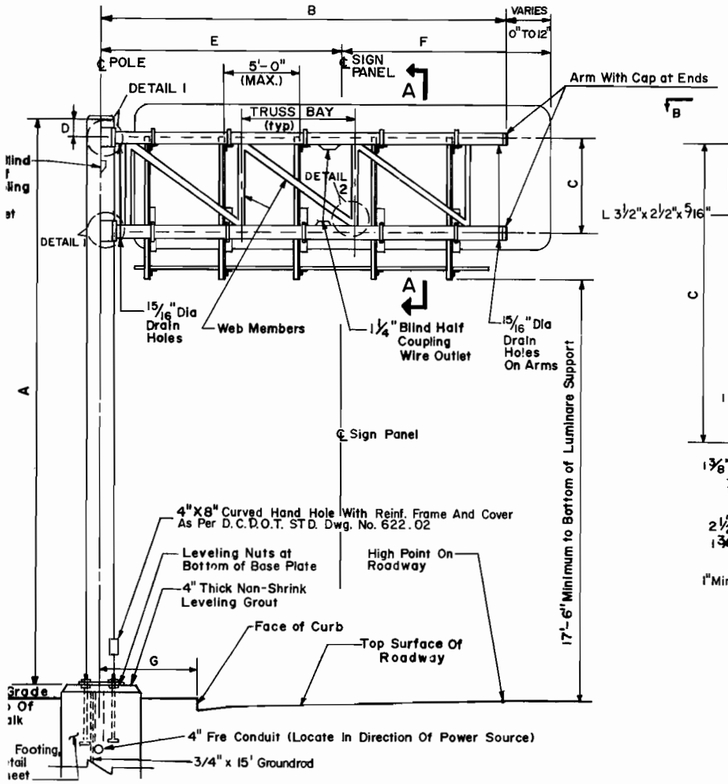

ELEVATION OF SINGLE CANTILEVER SIGN SUPPORT (REAR VIEW)

No Scale

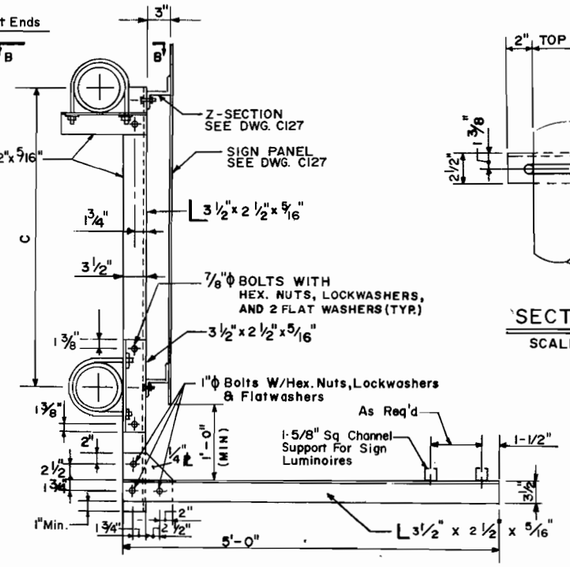

SIGN-SUPPORT (TYP)
SECTION A-A

SCALE: 1"=1'-0"

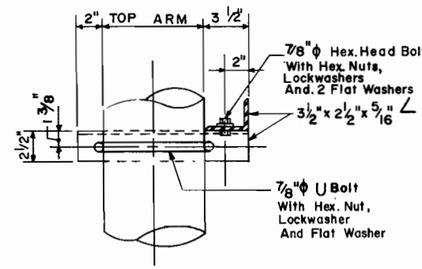

SECTION BB

SCALE: 2"=1'-0"

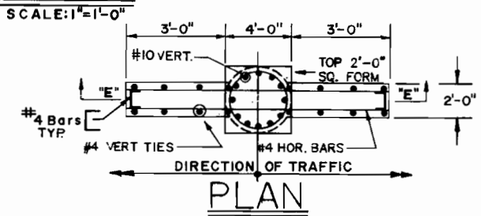

PLAN

NTS

SIGN NO.	POLE SIZE	ARM TUBE SIZE	TRUSS MEMBER ϕ SIZE	X	ϕ	TRUSS BAYS	A	B	C	D	E	F	G	LOCATION	SIGN DIM.
C-1	20" O.D. x 0.375" THK	12.75" O.D. x 0.375" THK	4" O.D. x 0.226" THK	1'-0"	45°00'00"	7@ 4'-0"	25'-8"	30'-0"	4'-0"	1'-0"	23'-0"	8'-0"	13'-0"	STA. 22+70 N.Y. AVE.	16'-0" x 9'-0"
C-2	20" O.D. x 0.375" THK	12.75" O.D. x 0.375" THK	4" O.D. x 0.226" THK	1'-0"	46°13'17"	7@ 3'-10"	24'-6"	28'-10"	4'-0"	1'-0"	24'-0"	4'-0"	13'-0"	STA. 26+00 N.Y. AVE.	8'-0" x 5'-0"
C-3	20" O.D. x 0.375" THK	12.75" O.D. x 0.375" THK	4" O.D. x 0.226" THK	1'-0"	44°8'52"	6@ 5'-2"	27'-8"	33'-0"	8'-0"	1'-0"	23'-6"	10'-6"	16'-0"	STA. 28+74 N.Y. AVE.	21'-0" x 10'-0"
C-4	16" O.D. x 0.312" THK	8.625" O.D. x 0.322" THK	3.5" O.D. x 0.216" THK	1'-0"	45°00'00"	6@ 3'-6"	28'-0"	23'-0"	3'-6"	1'-0"	14'-0"	10'-0"	7'-0"	STA. 1+23 4TH STREET	23'-0" x 12'-6"
C-5	16" O.D. x 0.312" THK	8.625" O.D. x 0.322" THK	3.5" O.D. x 0.216" THK	1'-0"	47°52'6"	6@ 3'-2"	24'-3"	21'-0"	3'-6"	1'-0"	17'-0"	4'-0"	10'-6"	STA. 96+00 S.B.L.	8'-0" x 5'-0"
C-6	20" O.D. x 0.375" THK	10.75" O.D. x 0.365" THK	3.5" O.D. x 0.216" THK	1'-0"	45°00'00"	6@ 4'-0"	25'-8"	26'-0"	4'-0"	1'-0"	19'-0"	8'-0"	7'-0"	STA. 37+00 N.Y. AVE.	16'-0" x 9'-0"
C-7	20" O.D. x 0.375" THK	10.75" O.D. x 0.365" THK	3.5" O.D. x 0.216" THK	1'-0"	45°00'00"	6@ 4'-0"	26'-2"	26'-0"	4'-0"	1'-0"	16'-6"	10'-0"	5'-6"	STA. 1+45 3RD STREET	22'-0" x 12'-6"
C-8	16" O.D. x 0.312" THK	8.625" O.D. x 0.322" THK	3.5" O.D. x 0.216" THK	1'-0"	47°52'6"	6@ 3'-2"	24'-3"	21'-0"	3'-6"	1'-0"	17'-0"	4'-0"	9'-6"	STA. 3+10 3RD. STREET RAMP	8'-0" x 5'-0"
C-9	20" O.D. x 0.375" THK	12.75" O.D. x 0.375" THK	4" O.D. x 0.226" THK	1'-0"	46°13'17"	7@ 3'-10"	24'-6"	28'-10"	4'-0"	1'-0"	24'-10"	4'-0"	8'-6"	STA. 19+85 RAMP "D"	8'-0" x 5'-0"

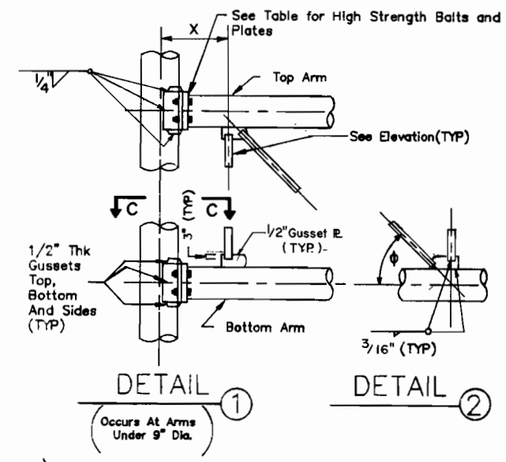

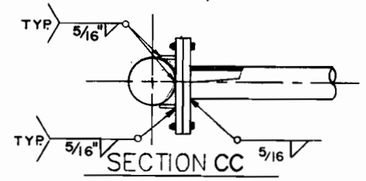

SECTION CC

ARM SIZE, PIPE	ARM TO POST CONNECTION NO. OF BOLTS	FLANGE PLATE
8.625" O.D. x 0.322 THK	4-1 1/2" ϕ	17" x 17" x 1 3/4" Thk.
10.75" O.D. x 0.365 THK	4'-1 3/4" ϕ	19" x 19" x 2" Thk.
12.75" O.D. x 0.375 THK	4'-1 3/4" ϕ	21" x 21" x 2 1/2" Thk.

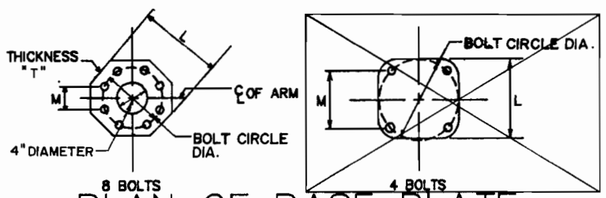

PLAN OF BASE PLATE

BASE PLATE DIMENSIONS					ANCHOR BOLT NO. & SIZE
POLE SIZE	L	M	"T" THICKNESS	BOLT CIRCLE DIA.	55,000 PSI
16" O.D. x 0.312 Thk.	26"	8"	1 3/4"	21"	8-1½"ϕ
20" O.D. x 0.375 Thk.	30"	9.56"	2"	25"	8-1½"ϕ

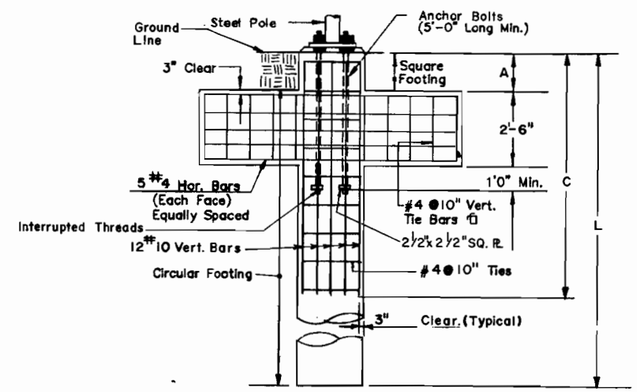

SECTION E-E

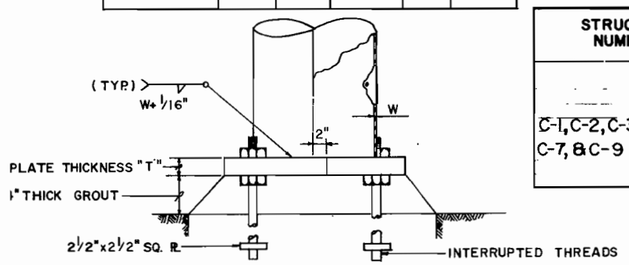

TYPICAL BASE PLATE COLUMN DETAIL (N.T.S.)

STRUCTURE NUMBER	SOIL PARAMETERS SIDE BEARING PRESSURE	A	PILE DIMENSIONS C	L
C-1, C-2, C-3, C-6, C-7, & C-9	1000 PSF	2'-6"	7'-3"	13'-0"
	900 PSF	2'-6"	7'-6"	13'-6"
	800 PSF	2'-6"	7'-9"	13'-9"
	700 PSF	2'-6"	6'-3"	14'-6"
	600 PSF	2'-6"	8'-9"	15'-0"
	500 PSF	2'-6"	9'-6"	16'-0"
	400 PSF	2'-6"	10'-0"	17'-0"
	300 PSF	2'-6"	11'-6"	19'-0"

STRUCTURE NUMBER	SOIL PARAMETERS SIDE BEARING PRESSURE	A	PILE DIMENSIONS C	L
C-4, C-5, & C-8	1000 PSF	2'-6"	7'-6"	13'-0"
	900 PSF	2'-6"	7'-9"	13'-6"
	800 PSF	2'-6"	8'-0"	14'-0"
	700 PSF	2'-6"	8'-6"	14'-9"
	600 PSF	2'-6"	9'-0"	15'-6"
	500 PSF	2'-6"	9'-6"	16'-3"
	400 PSF	2'-6"	10'-6"	17'-6"
	300 PSF	2'-6"	11'-9"	19'-3"

GENERAL NOTES:

1. Design Specifications: AASHTO; Standard Specifications for Structural Supports for Highway Signs, Luminaires and Traffic Signals, 1985
2. Welding Specifications: Bridge Welding Code AASHTO/AWSD1.1-90
3. Materials:
   - All pipes: ASTM A513, Grade 55 galvanized as per ASTM A153 (M232)
   - U-bolts, Anchor Bolts and Nuts: ASTM A325 (M164) and galvanized as per ASTM A153 (M232)
   - Plates & angles: ASTM A36 (M183)
   - Pole caps: ASTM A27 (M103) and galvanized as per ASTM A153 (M232)
4. All dimensions including column height and anchor bolt locations shall be field verified before fabrication.
5. The drawings describe the completed project. They do not indicate elements which may be necessary for construction safety. The contractor is responsible for safety around the job site during construction.
6. The contractor shall secure the services of Geotechnical consultant approved by the D.C.D.P.W. to obtain the site specific soil borings for the purpose of determining the allowable side bearing capacity of soil and non-effective depth (undesirable foundation material) "A". In the event that the above values differ from the values shown in table, the engineer should be notified for the final determination of pile dimension "C" & "L".
7. Steel casing shall be provided for the full depth of the caisson shaft excavation.
8. When groundwater is encountered, caisson excavation shall be dewatered by pumping as necessary for cleaning and concreting operations. Pumps shall be capable of maintaining a water level of no more than three inches in the bottom of the caisson at all times. During dewatering operations, care must be exercised to prevent movement of soil material.
9. Caisson bearing surfaces shall be cleaned of all loose or softened materials, debris or other substances that may cause settlement or affect concrete strength.
10. Concrete strength (fc') for caisson shall be 3000 psi.
11. Where aluminum comes in contact with steel other than stainless steel, a 1/16 inch thick approved insulating material shall be placed between two members.

NO.	DESCRIPTION	NAME	DATE

REVISIONS

TIPPETTS-ABBETT-McCARTHY-STRATTON
ENGINEERS-ARCHITECTS AND PLANNERS
IN ASSOCIATION WITH:
FLEMING CORPORATION

D.C. DEPARTMENT OF PUBLIC WORKS
BUREAU OF TRANSPORTATION CONSTRUCTION SERVICES
DESIGN AND ENGINEERING DIVISION

I-395 CENTER LEG OF THE INNER LOOP
REHABILITATION OF
THE MALL TUNNEL

SIGN BRIDGE DETAILS
CANTILEVER SIGN PANELS
AND STRUCTURAL DETAILS

PROJECT ENG. G.M.
DESIGNED BY R.A.
CHECKED BY G.M.
DRAWN BY W.S.
PROJECT MGR. J.B.

DIVISION CHIEF
DATE
FILE 1142

SPAN	SIGN PANELS (SEE ELEVATION BELOW)																							END FRAMES (SEE SECTION A-A)		SEE DETAIL-G		SEE DETAIL-B&D							SEE DETAIL-F		
	PANEL NO.	A_1	W_1	H_1	PANEL NO.	A_2	W_2	H_2	PANEL NO.	A_3	W_3	H_3	C_1	J_1	K_1	C_2	J_2	K_2	C_3	J_3	K_3	M	N	B_1 BASED ON DESIGN SIGN SIZE	B_2 BASED ON DESIGN SIGN SIZE	D	Q	E	F	G	T	ANCHOR BOLTS	P	TYPE	PIPE BRACE SIZE	θ	POLE SIZE
105'-6"	2 A-1 A	58'-0"	20'-0"	13'-6"	2 A 1 B	80'-0"	16'-0"	12'-6"	–	–	–	–	–	–	–	–	–	–	–	–	–	11'-0"	14'-6"	22'-6"(±)	22'-6"(±)	5'-0"	6'-0"	20"	7.65"	28"	2 1/2"	8-1 1/2"ϕ	5"	I	2 1/2"ODx.203"Thk	20°33'22"	14"OD X 0.5" THK
43'-6"	2 A-2	26'-0"	16'-0"	10'-6"	W.S.	15'-6"	8'-0"	5'-0"	–	–	–	–	–	–	–	–	–	–	–	–	–	3'-0"	6'-6"	21'-9"(±)	21'-9"(±)	3'-6"	–	24"	17"	23"	1 1/2"	4-1 1/4"ϕ	4 1/2"	II	–	–	18"OD X 0.312" THK

NOTE:
1. For General Notes See Drawing No. C124.
2. For Details Of Truss See Drawing No. C126.

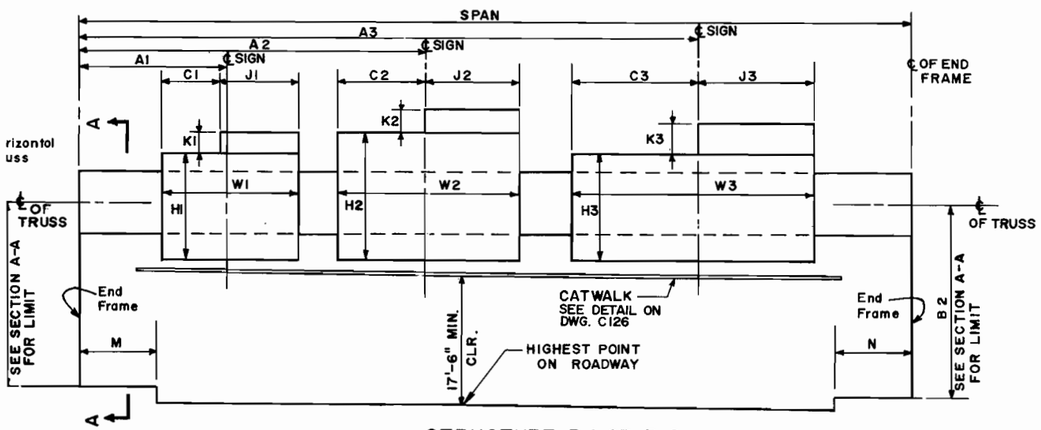

STRUCTURE P-1 OR P-2
ELEVATION-DIRECTION OF TRAFFIC

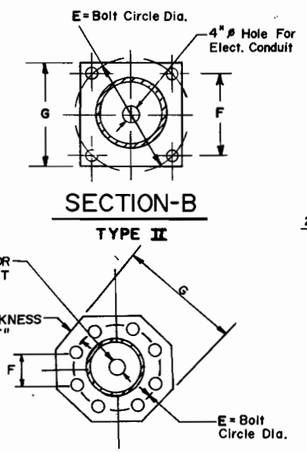

SECTION-B
TYPE II

SECTION-B
TYPE I

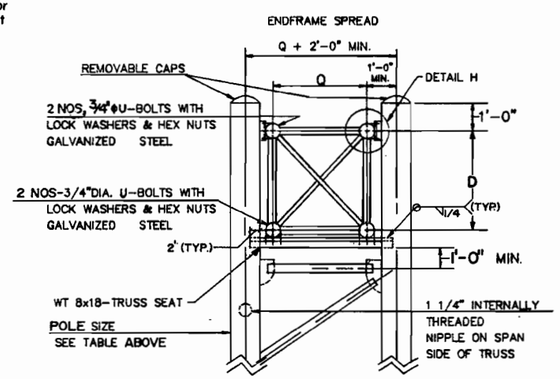

DETAIL-G
N.T.S.

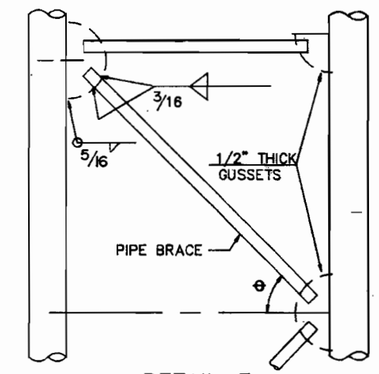

DETAIL-F
N.T.S.

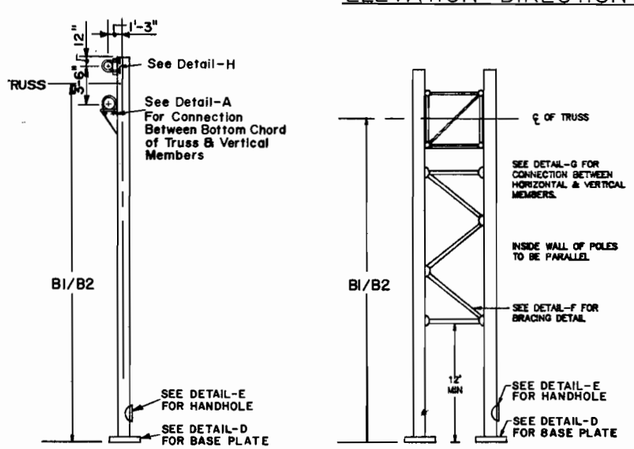

SECTION A-A
N.T.S.

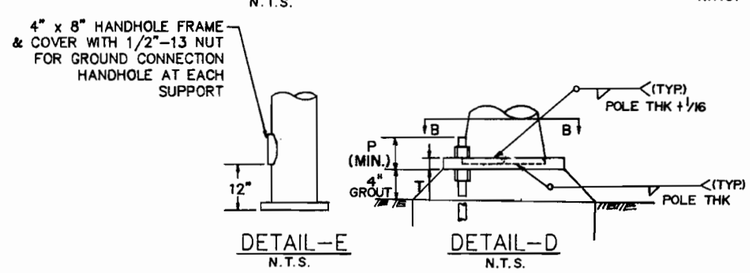

DETAIL-E
N.T.S.

DETAIL-D
N.T.S.

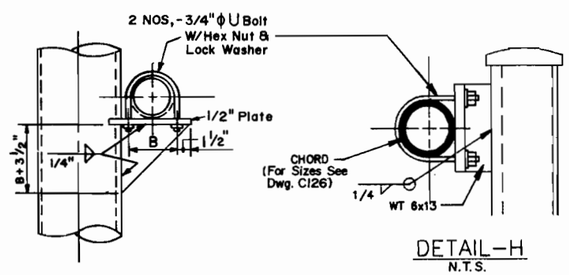

DETAIL-A
N.T.S.

DETAIL-H
N.T.S.

TIPPETTS·ABBETT·McCARTHY·STRATTON
ENGINEERS·ARCHITECTS AND PLANNERS
IN ASSOCIATION WITH:
FLEMING CORPORATION

NO.	DESCRIPTION	NAME	DATE

REVISIONS

D.C. DEPARTMENT OF PUBLIC WORKS
BUREAU OF TRANSPORTATION CONSTRUCTION SERVICES
DESIGN AND ENGINEERING DIVISION

I-395 CENTER LEG OF THE INNER LOOP REHABILITATION OF THE MALL TUNNEL

SIGN BRIDGE DETAILS
PORTAL-SIGN PANELS AND END FRAMES

PROJECT ENG. G.M.
DESIGNED BY R.A
CHECKED BY G.M.
DRAWN BY W.B.
PROJECT MGR. T.B.
DIVISION CHIEF
DATE
FILE 1142
SHEET 31 OF 199

F.H.W.A. REG. NO.	STATE	FED AID PROJECT NO.	SHEET NO.	TOTAL SHEETS
3	D.C.	IR-395-1(150)	32	199

HORIZONTAL TRUSS

SPAN	CHORD DIA.	WALL THICK	FLANGE PLATE (SEE SECT G-G) TYPE	THICK	Z	B.C.	NO. OF BOLTS & SIZE	PIPE BRACE SIZE DIAGONAL	END	Q
'-6"	10.00 O.D.	0.365"	II	1¼"	14½"	12¼"	8 - 7/8"ϕ	2.875"O.D. x 0.203"Thk.	2.875"O.D. x 0.203"Thk.	5'-0"
-6"	10.75" O.D.	0.5"	—	—	—	—	—	1.900"O.D. x 0.145"Thk.	1.900"O.D. x 0.145"Thk.	3'-6"

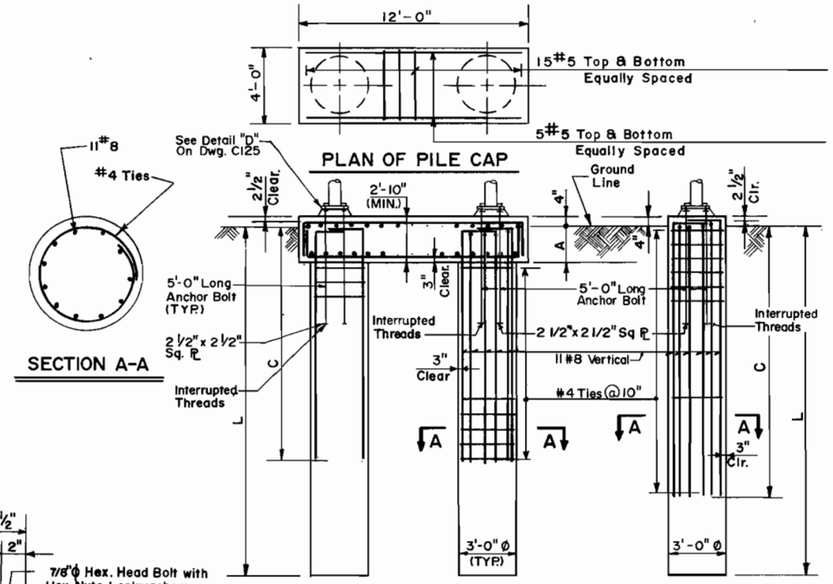

ELEVATION STRUCTURE-P1

ELEVATION STRUCTURE-P2

FLANGE PLATES

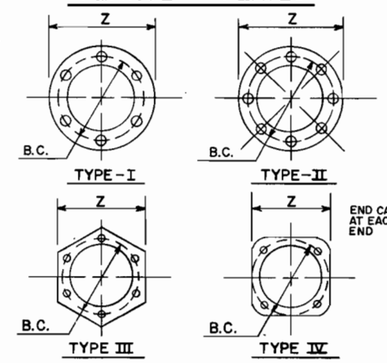

SECTION G-G

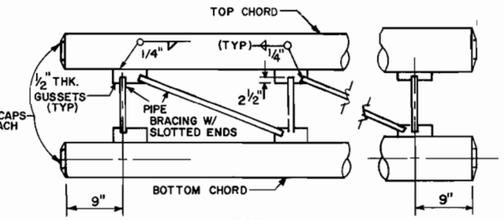

SECTION D-D

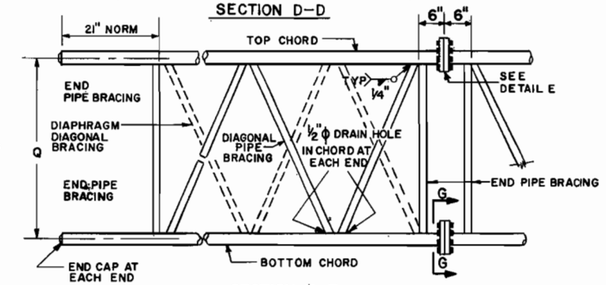

SECTION F-F

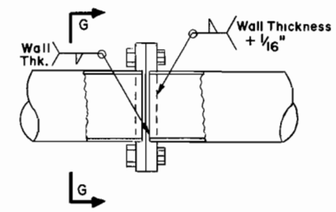

DETAIL-E

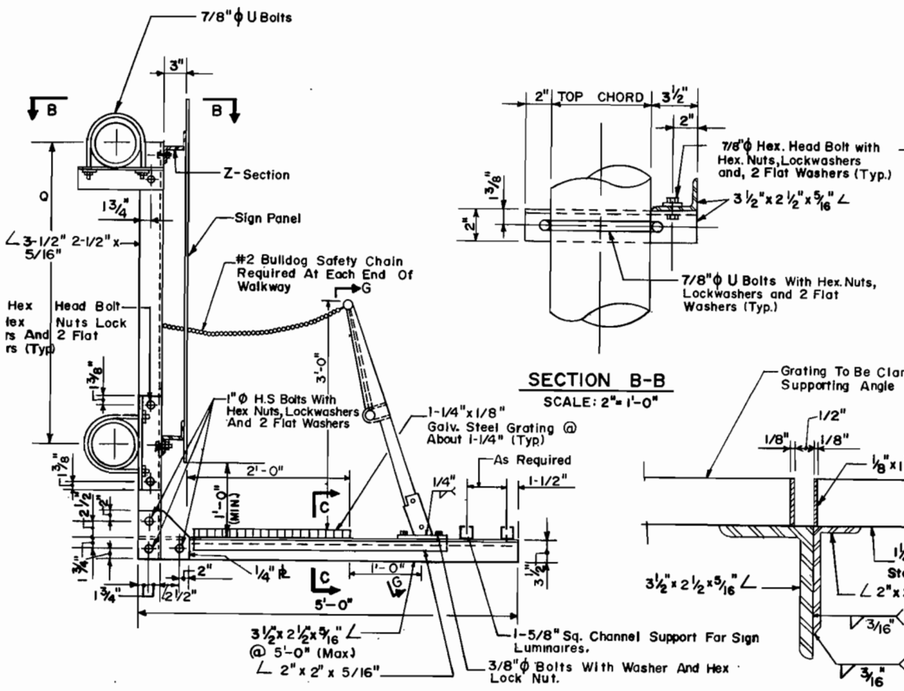

SIGN-SUPPORT DETAIL (TYP)
SCALE: 1" = 1'-0"

SECTION B-B
SCALE: 2" = 1'-0"

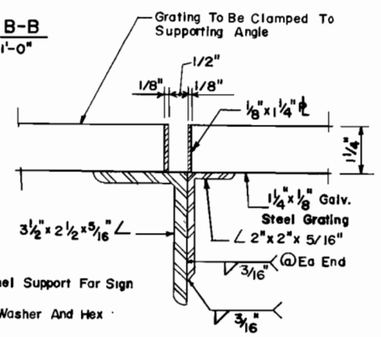

SECTION C-C
SCALE: 2" = 1'-0"

FOUNDATION DETAILS

SCALE: 3/4" = 1'-0"

STRUCTURE FOUNDATION	SOIL PARAMETERS ALLOWABLE SIDE BEARING CAPACITY	PILE A	C	L
P1	1000 PSF	2'-6"	7'-8"	13'-6"
	900 PSF	2'-6"	8'-0"	14'-0"
	800 PSF	2'-6"	8'-6"	14'-6"
	700 PSF	2'-6"	9'-0"	15'-0"
	600 PSF	2'-6"	9'-6"	13'-6"
	500 PSF	2'-6"	10'-3"	17'-0"
	400 PSF	2'-6"	11'-4"	16'-0"
	300 PSF	2'-6"	12'-9"	20'-6"
P2	1000 PSF	2'-6"	6'-9"	12'-6"
	900 PSF	2'-6"	7'-0"	12'-9"
	800 PSF	2'-6"	7'-6"	13'-3"
	700 PSF	2'-6"	7'-9"	13'-9"
	600 PSF	2'-6"	8'-5"	14'-6"
	500 PSF	2'-6"	9'-0"	15'-4"
	400 PSF	2'-6"	9'-10"	16'-6"
	300 PSF	2'-6"	11'-0"	18'-3"

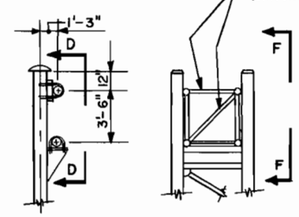

P-2 P-1

SPLICE JOINTS AND END PIPE BRACING (DIAGONAL AND FOUR SIDES)

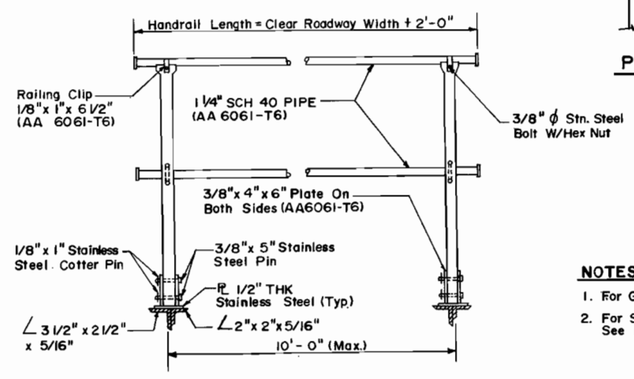

SECTION G-G
(ELEVATION OF HANDRAIL)
N.T.S.

NOTES

1. For General Notes See Drawing No. C124.
2. For Size And Details Of Anchor Bolts See Detail D On Dwg. C125.

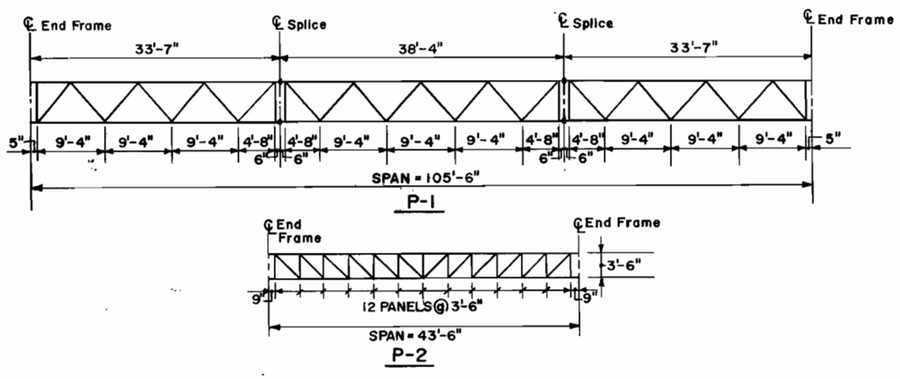

HORIZONTAL TRUSS DETAILS

TIPPETTS·ABBETT·McCARTHY·STRATTON
ENGINEERS, ARCHITECTS AND PLANNERS
IN ASSOCIATION WITH
FLEMING CORPORATION

NO.	DESCRIPTION	NAME	DATE

REVISIONS

D.C. DEPARTMENT OF PUBLIC WORKS
BUREAU OF TRANSPORTATION CONSTRUCTION SERVICES
DESIGN AND ENGINEERING DIVISION

I-395 CENTER LEG OF THE INNER LOOP REHABILITATION OF THE MALL TUNNEL

SIGN BRIDGE DETAILS
PORTAL-TRUSS AND FOOTINGS

PROJECT ENG. G.M.
DESIGNED BY R.A.
CHECKED BY G.M.
DRAWN BY W.B.
PROJECT MGR. J.B.
DIVISION CHIEF
DATE
FILE 142

F.H.W.A. REG. NO.	STATE	FED AID PROJECT NO.	SHEET NO.	TOTAL SHEETS
3	D.C.	IR-395-1(150)	33	199

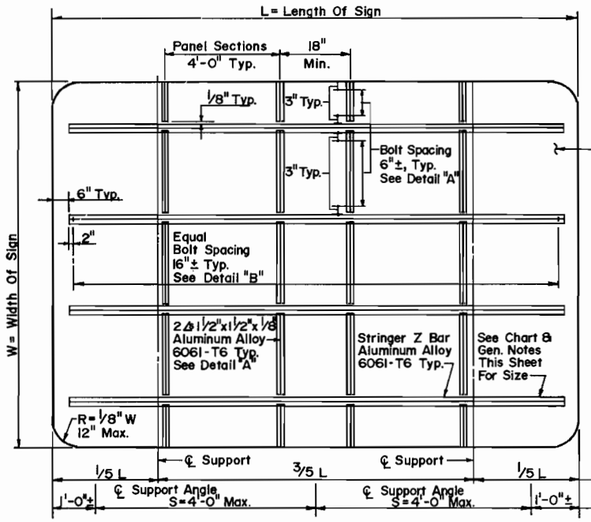

TYPICAL SIGN PANEL
BOLTED METHOD

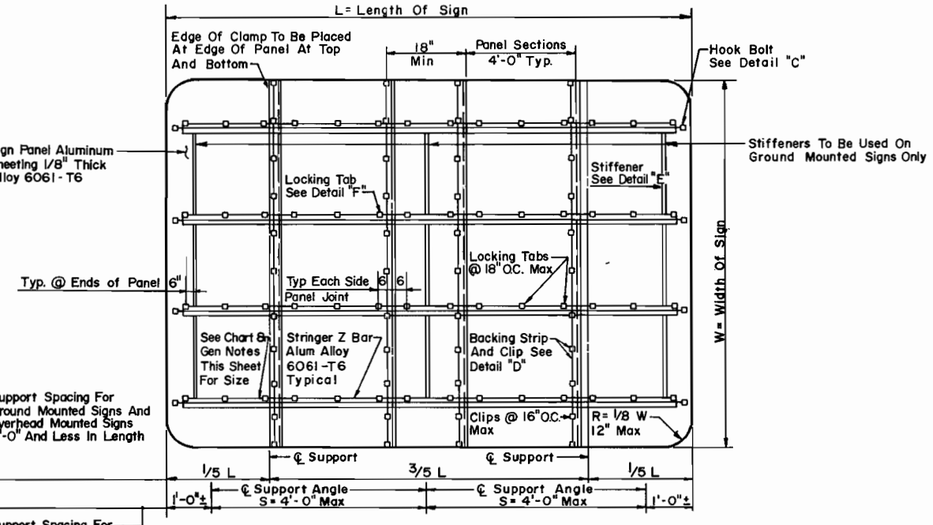

TYPICAL SIGN PANEL
✱ CLIP METHOD
(✱ BOLTING METHOD CAN BE USED)

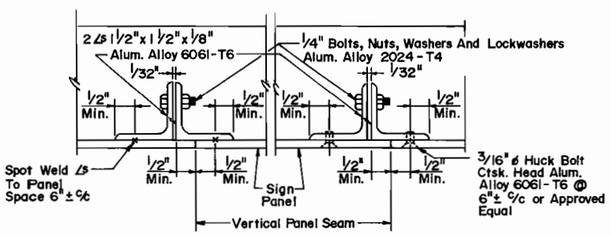

WELDED RIVETED

DETAIL "A"
METHOD OF ATTACHING
VERTICAL ANGLES TO SHEETING

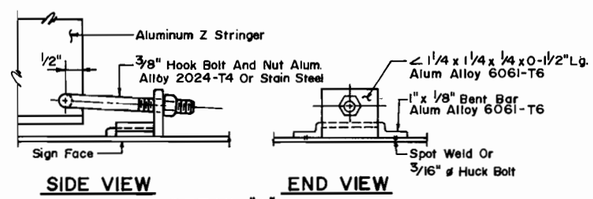

SIDE VIEW END VIEW

DETAIL "C"
HOOK BOLT

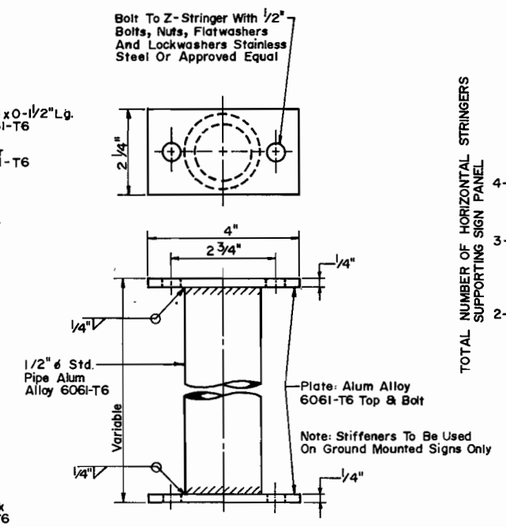

DETAIL "E"
STIFFENER

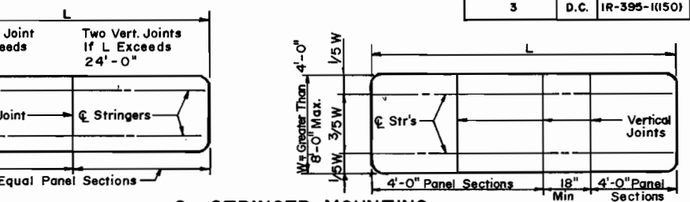

2 - STRINGER MOUNTING

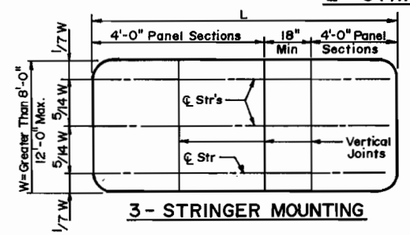

3 - STRINGER MOUNTING

Notes - To Obtain Desired Sign Length "L", Not More Than Two Panel Sections May Be Cut Less Than 4'-0" Wide (18 Min. Each).

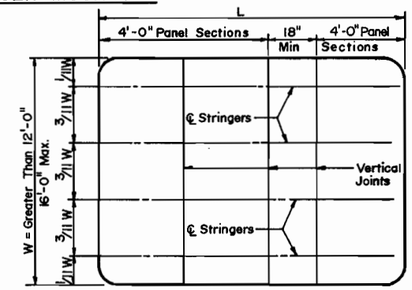

4 - STRINGER MOUNTING

STRINGER SPACING
AND PANEL SECTION ARRANGEMENT

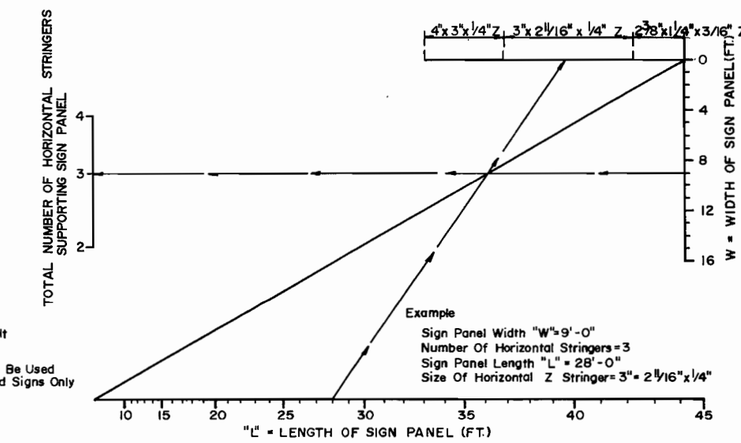

CHART FOR DETERMINING SIZE OF HORIZONTAL STRINGERS
FOR SUPPORTING SIGN PANELS OF GROUND MOUNTED SIGNS

NOTES:

1. Horizontal Panel Stringers For Ground Mounted Signs Shall Be Sized As Required By The Chart Shown Above.
2. All Horizontal Stringers For Overhead Mounted Signs Shall Be Aluminum "Z" Bars 3" x 2 11/16" x 1/4" At 2.33 lbs./ft.
3. Allowable Unit Stresses Shall Be As Indicated In The AASHTO Standard Specifications For Structural Supports For Highway Signs, Luminaires And Traffic Signals, 1985.

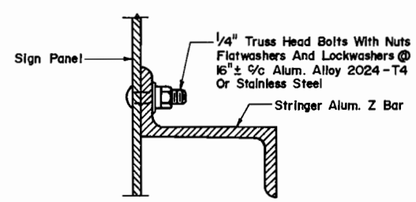

DETAIL "B"
METHOD OF ATTACHING
STRINGER TO SHEETING

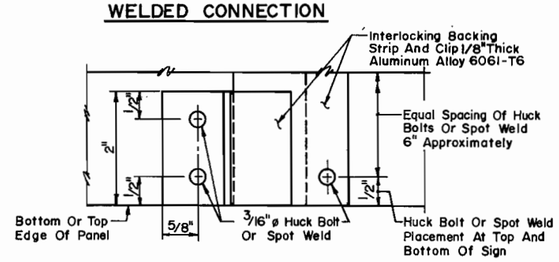

WELDED CONNECTION

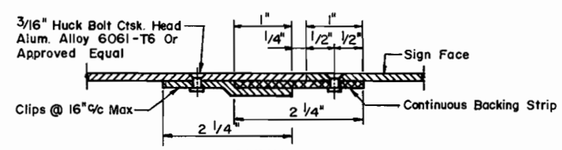

BOLTED CONNECTION
DETAIL "D"
INTERLOCKING CLIP &
BACKING STRIP

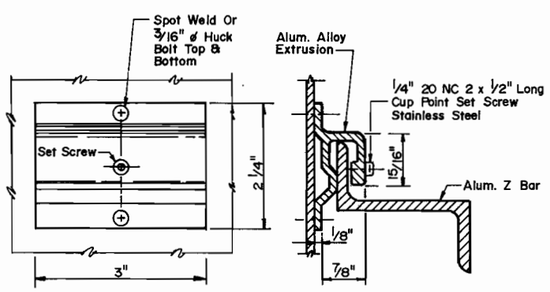

DETAIL "F"
LOCKING TAB

D.C. DEPARTMENT OF PUBLIC WORKS
BUREAU OF TRANSPORTATION CONSTRUCTION SERVICES
DESIGN AND ENGINEERING DIVISION

I-395 CENTER LEG OF THE INNER LOOP REHABILITATION OF THE MALL TUNNEL

GUIDE SIGN PANEL DETAILS

PROJECT ENG. G.M.
DESIGNED BY R.A.
CHECKED BY G.M.
DRAWN BY H.S.
PROJECT MGR. I.B.
DIVISION CHIEF
DATE
FILE 1142

TIPPETTS·ABBETT·McCARTHY·STRATTON
ENGINEERS, ARCHITECTS AND PLANNERS
IN ASSOCIATION WITH:
FLEMING CORPORATION

NO.	DESCRIPTION	NAME	DATE

REVISIONS

F.H.W.A. REG. NO.	STATE	FED AID PROJECT NO.	SHEET NO.	TOTAL SHEETS
3	D.C.	IR-395-1(150)	34	199

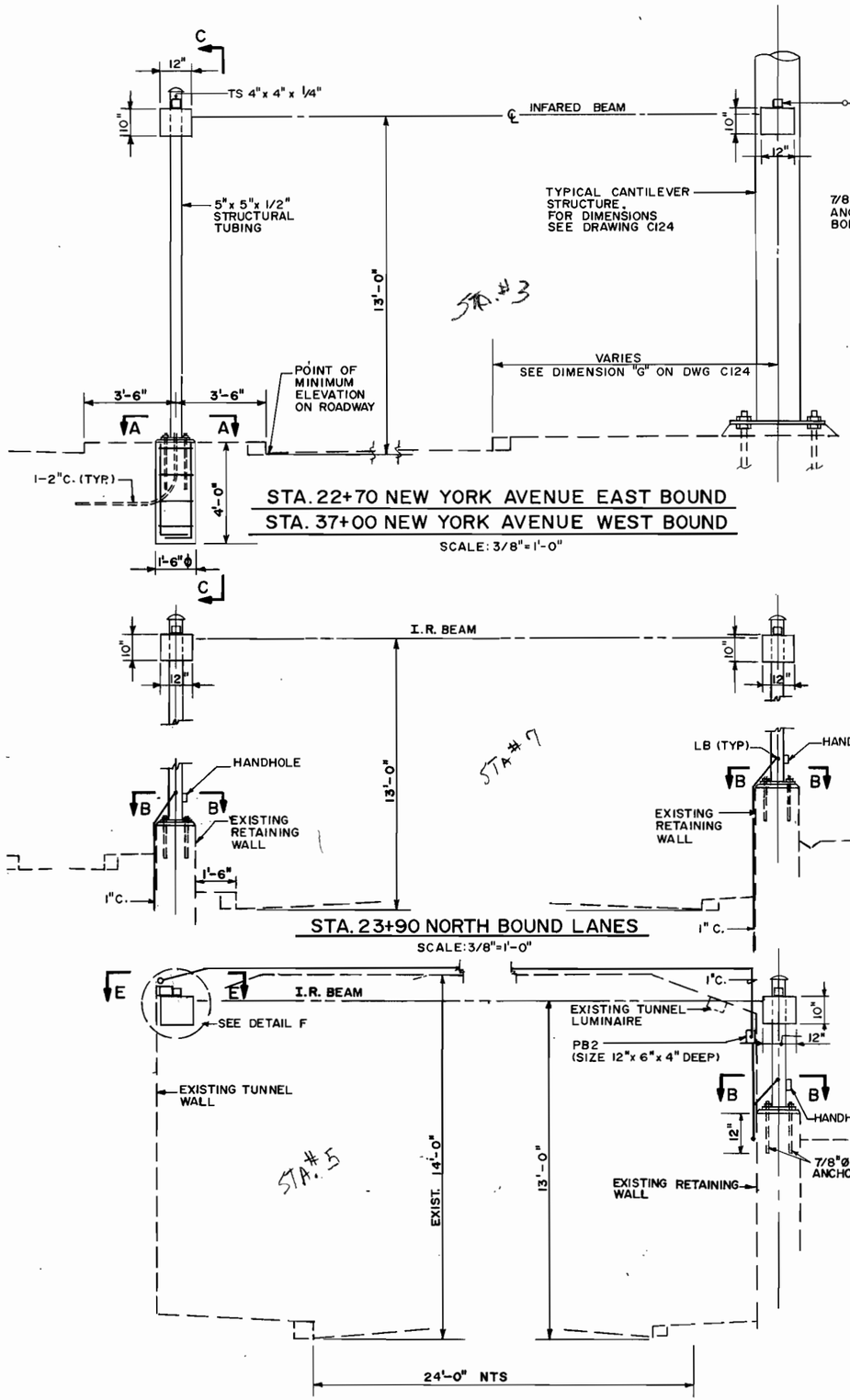

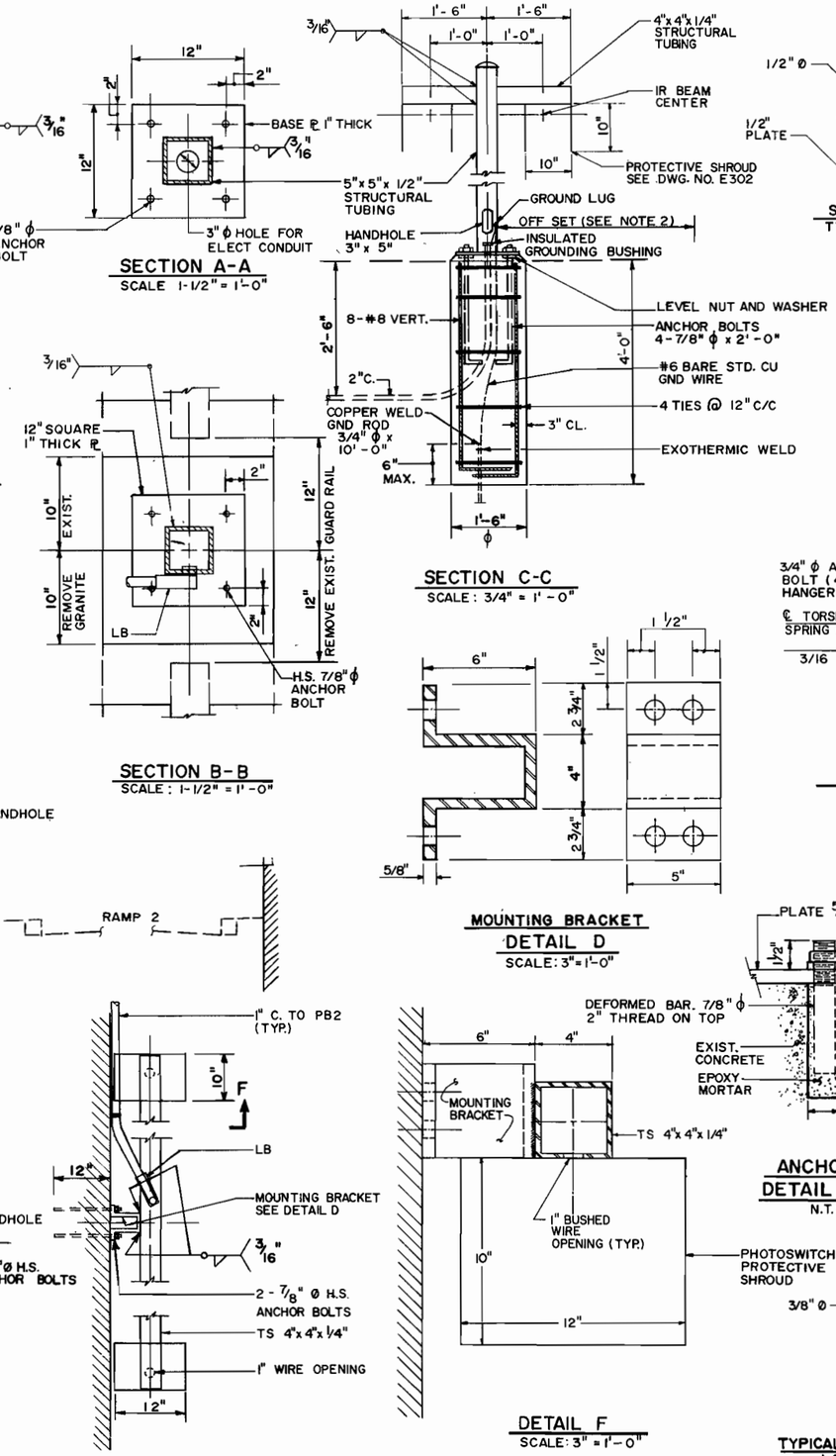

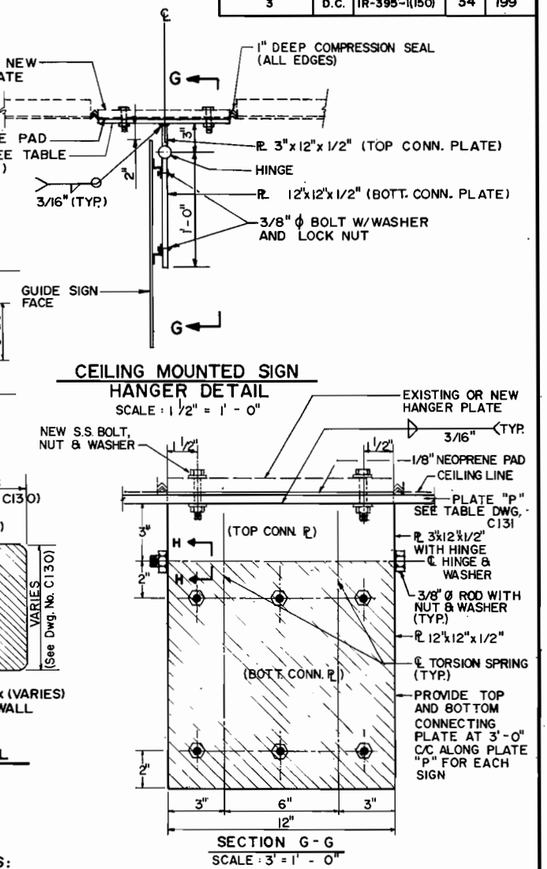

NOTES:

1. SEE SECTION C-C FOR DETAILS OF OVER-HEIGHT VEHICLE DETECTION STRUCTURE ON STATION 99+00 ON S.B. LANE, AND STATION 0+72 ON 3RD STREET.
2. FOR OFF SET DIMENSIONS SEE UTILITY SHEET, DRAWING NO. C122 & C123.
3. ALL STRUCTURAL STEEL SHALL BE GALVANIZED TO MEET THE REQUIREMENTS OF AASHTO M111 (ASTM123) BOLTS, NUTS AND WASHERS SHALL BE HOT-DIPPED OR MECHANICALLY GALVANIZED. THE COATING SHALL MEET THE ADHERENCE THICKNESS AND QUALITY REQUIREMENTS OF AASHTO M322 (ASTM A153) STRUCTURAL STEEL TO BE GALVANIZED AFTER FABRICATION.
4. ALL STEEL SHALL BE AASHTO M183, (ASTM A 36) GRADE 36 UNLESS OTHERWISE NOTED.
5. ANCHOR BARS SHALL BE ASTM A615 (M31) GRADE 60 DEFORMED REBARS TOP MIN. 12" TO BE GALVANIZED NUTS TO BE ASTM A194 (M292) GRADE 2 OR 2H.
6. CONCRETE FOUNDATION SHALL HAVE A 3000 PSI 28 DAYS COMPRESSIVE STRENGTH.
7. REINFORCED STEEL SHALL CONFORM TO AASHTO M31 (ASTM A 615) GRADE 60.
8. CEILING AND WALL MOUNTED HANGERS TO BE SPRING LOADED. SEE SPECIAL PROVISIONS.
9. ALL CONDUITS SHALL BE BONDED TO SUPPORT STRUCTURES AND SYSTEM GROUNDS WITH MINIMUM OF #8 STRANDED COPPER WIRE.

TIPPETTS·ABBETT·McCARTHY·STRATTON
ENGINEERS, ARCHITECTS AND PLANNERS
IN ASSOCIATION WITH:
FLEMING CORPORATION

NO.	DESCRIPTION	NAME	DATE

REVISIONS

D.C. DEPARTMENT OF PUBLIC WORKS
BUREAU OF TRANSPORTATION CONSTRUCTION SERVICES
DESIGN AND ENGINEERING DIVISION

I-395 CENTER LEG OF THE INNER LOOP REHABILITATION OF THE MALL TUNNEL

OVER-HEIGHT DETECTION AND TUNNEL SIGNS SUPPORT DETAILS

PROJECT ENG. G.M.
DESIGNED BY R.A.
CHECKED BY G.M.
DRAWN BY W.B.
PROJECT MGR. I.B.
DIVISION CHIEF
DATE
FILE 1142

F.H.W.A. REG. NO.	STATE	FED AID PROJECT NO.	SHEET NO.	TOTAL SHEETS
3	D.C.	IR-395-1(150)	35	199

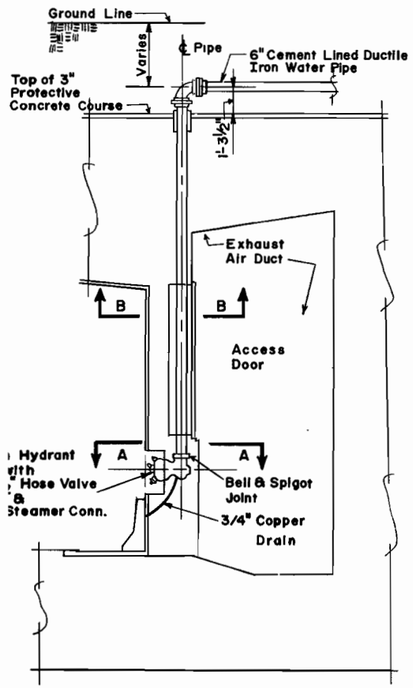

IRE HYDRANT INSTALLATION
SCALE: 1/4" = 1'-0"

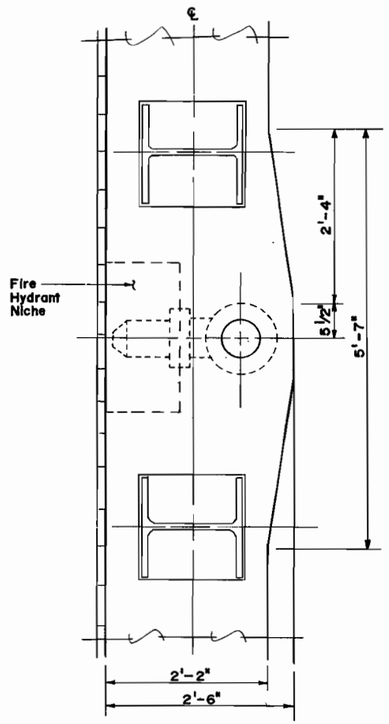

SECTION A-A
SCALE: 1" = 1'-0"

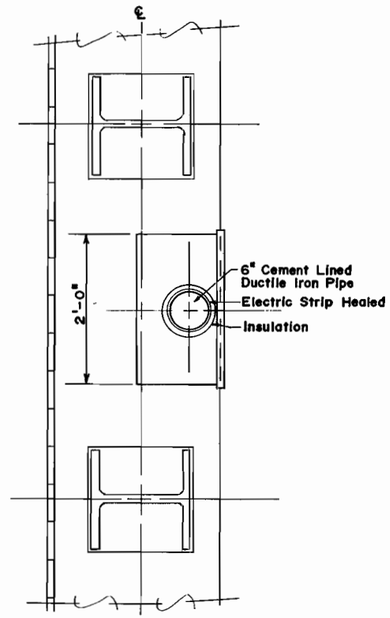

SECTION B-B
SCALE: 1" = 1'-0"

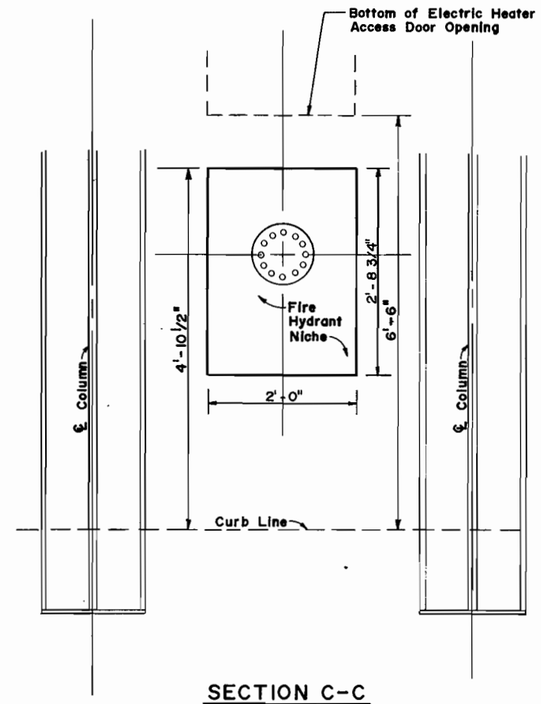

SECTION C-C
SCALE: 1" = 1'-0"

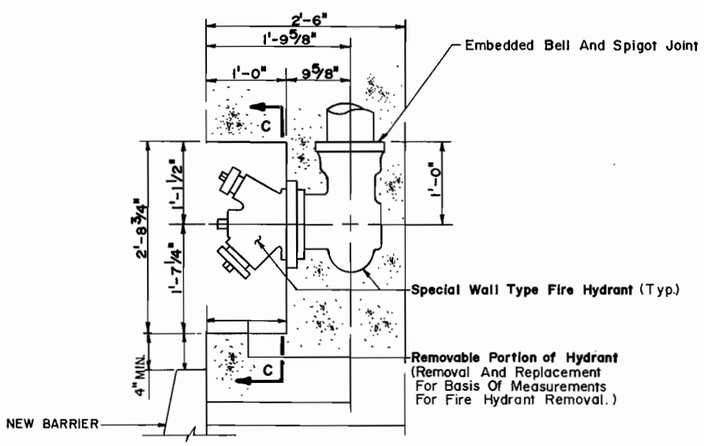

TYPICAL FIRE HYDRANT NICHE DETAIL
NOT TO SCALE

NOTES:

1. FOR FIRE HYDRANT REPLACEMENT PAY ITEM, CONTRACTOR IS TO MEASURE HIS/HER BID BASED ON THE REMOVAL AND REPLACEMENT OF FIRE HYDRANT PARTS AS SHOWN ON THIS DRAWING.
2. THIS DRAWING INDICATES EXISTING CONDITIONS, AND IT IS INCLUDED IN THE CONTRACT FOR REFERENCE PURPOSES ONLY.

TIPPETTS·ABBETT·McCARTHY·STRATTON
ENGINEERS, ARCHITECTS AND PLANNERS
IN ASSOCIATION WITH:
FLEMING CORPORATION

NO.	DESCRIPTION	NAME	DATE

REVISIONS

D.C. DEPARTMENT OF PUBLIC WORKS
BUREAU OF TRANSPORTATION CONSTRUCTION SERVICES
DESIGN AND ENGINEERING DIVISION

I-395 CENTER LEG OF THE INNER LOOP REHABILITATION OF THE MALL TUNNEL

FIRE HYDRANT DETAILS

PROJECT ENG. G.M.
DESIGNED BY R.A.
CHECKED BY G.M.
DRAWN BY W.B.
PROJECT MGR. J.B.

DIVISION CHIEF
DATE
FILE 1142

FINANCIAL REG. NO.	STATE	FED AID PROJECT NO.	SHEET NO.	TOTAL SHEETS
3	D.C.	IR-395-1(150)	36	199

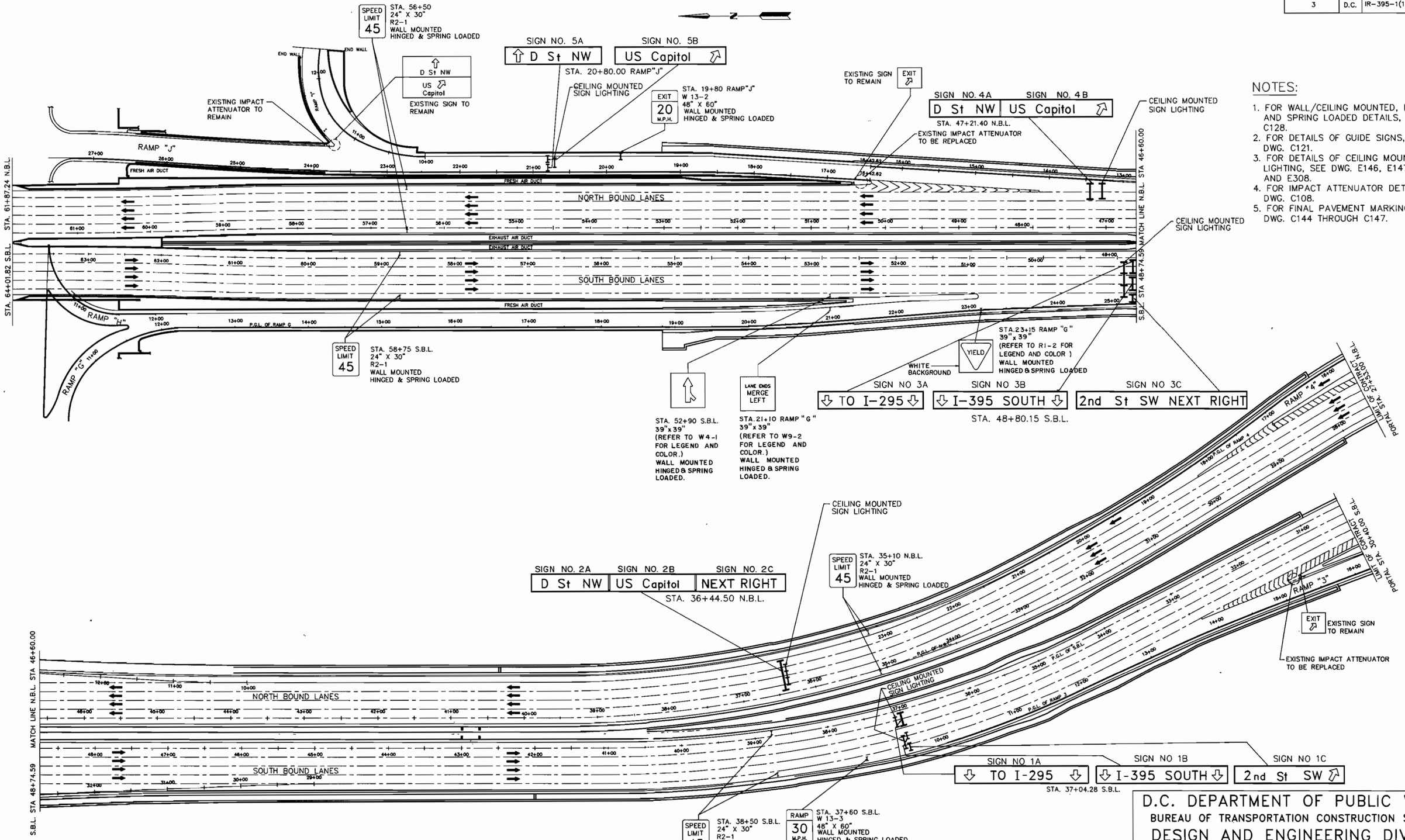

NOTES:

1. FOR WALL/CEILING MOUNTED, HINGED AND SPRING LOADED DETAILS, SEE DWG. C128.
2. FOR DETAILS OF GUIDE SIGNS, SEE DWG. C121.
3. FOR DETAILS OF CEILING MOUNTED SIGN LIGHTING, SEE DWG. E146, E147, E150 AND E308.
4. FOR IMPACT ATTENUATOR DETAILS, SEE DWG. C108.
5. FOR FINAL PAVEMENT MARKINGS, SEE DWG. C144 THROUGH C147.

SCALE 1"=60'

TIPPETTS.ABBETT.McCARTHY.STRATTON
ENGINEERS, ARCHITECTS AND PLANNERS
IN ASSOCIATION WITH:
FLEMING CORPORATION

NO	DESCRIPTION	NAME	DATE

REVISIONS

D.C. DEPARTMENT OF PUBLIC WORKS
BUREAU OF TRANSPORTATION CONSTRUCTION SERVICES
DESIGN AND ENGINEERING DIVISION

I-395 CENTER LEG OF THE INNER LOOP
REHABILITATION OF
THE MALL TUNNEL

TUNNEL SIGNING

PROJECT ENG. GM
DESIGNED BY RA
CHECKED BY GM
DRAWN BY FK
PROJECT MGR. JB

DIVISION CHIEF
DATE
FILE 1142

F.H.W.A. REG. NO.	STATE	FED AID PROJECT NO.	SHEET NO.	TOTAL SHEETS
3	D.C.	IR-395-1(150)	37	199

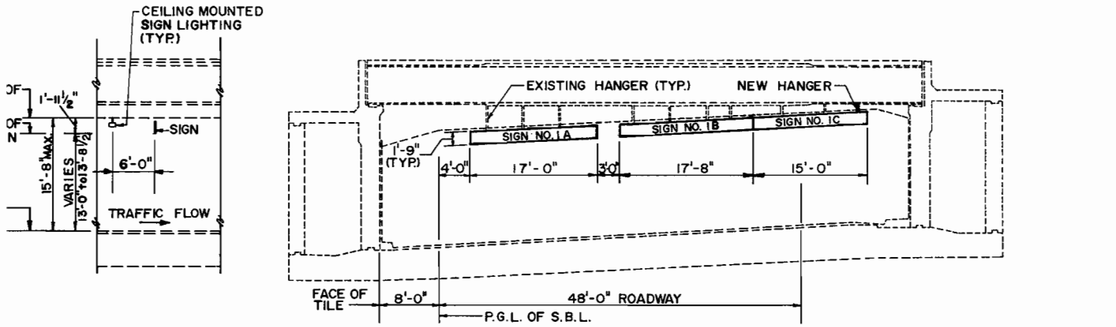

SIGN NO. 1A: ⇩ TO I-295 ⇩

SIGN NO. 1B: ⇩ I-395 SOUTH ⇩

SIGN NO. 1C: 2nd St SW ⇗

STA. 37+04.28 S.B.L.

NOTE: EXISTING HANGER LOCATIONS NOT SHOWN SHALL BE REUSED.

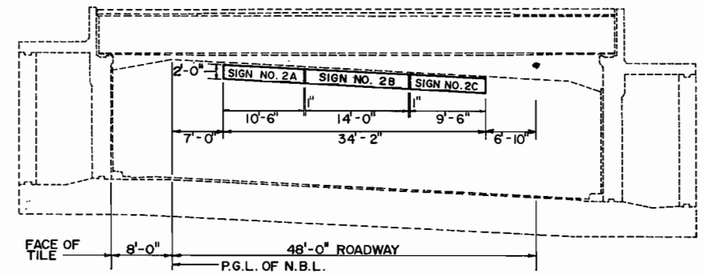

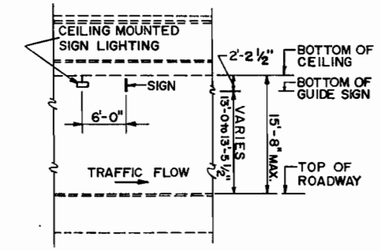

SIGN NO. 2A: D St NW

SIGN NO. 2B: US Capitol

SIGN NO. 2C: NEXT RIGHT

STA. 36+44.50 N.B.L.

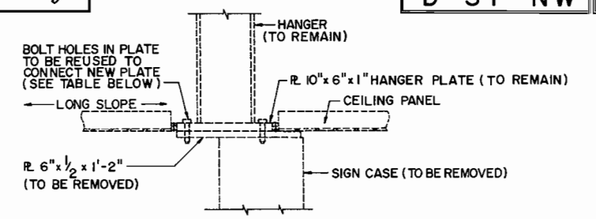

EXISTING HANGER DETAIL

SCALE: 1½" = 1'-0"

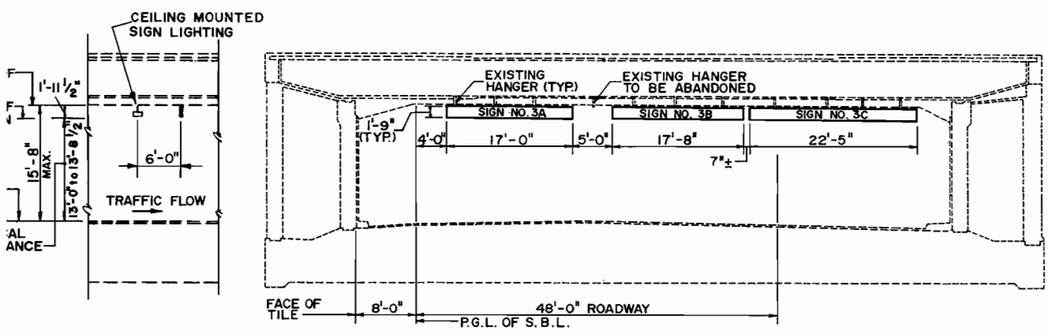

SIGN NO. 3A: ⇩ TO I-295 ⇩

SIGN NO. 3B: ⇩ I-395 SOUTH ⇩

SIGN NO. 3C: 2nd St SW NEXT RIGHT

STA. 48+80.15 S.B.L.

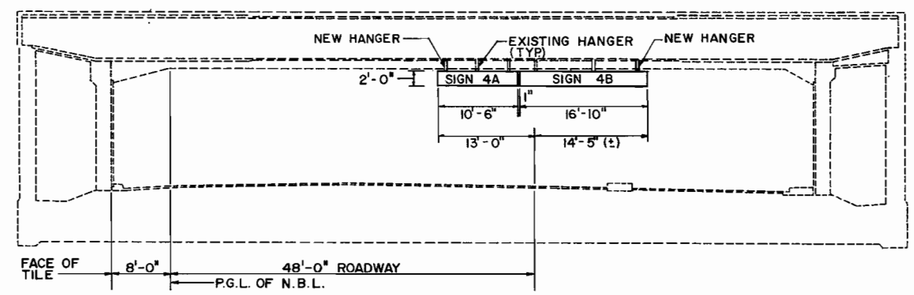

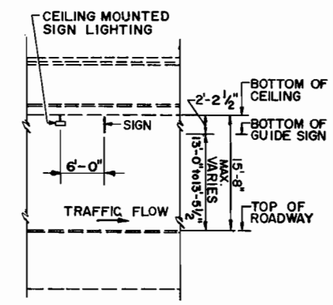

SIGN NO. 4A: D St NW

SIGN NO. 4B: US Capitol ⇗

STA. 47+21.40 N.B.L.

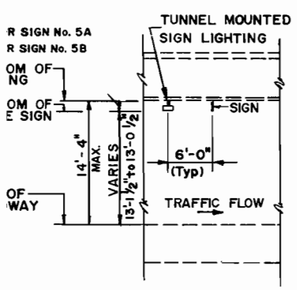

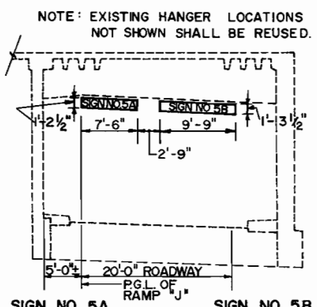

SIGN NO. 5A: ⇧ D St NW

SIGN NO. 5B: US Capitol ⇗

STA. 20+80.00 RAMP "J"

PLATE "P" TABLE	
SIGN	SIZE
1A	12" x 1/2" x 13'-0"
1B	12" x 1/2" x 15'-0"
1C	12" x 1/2" x 12'-0"
2A	12" x 1/2" x 9'-0"
2B	12" x 1/2" x 12'-0"
2C	12" x 1/2" x 7'-6"
3A	12" x 1/2" x 13'-0"
3B	12" x 1/2" x 15'-0"
3C	12" x 1/2" x 20'-0"
4A	12 x 1/2" x 8'-0"
4B	12" x 1/2" x 14'-6"
5A	12" x 1/2" x 7'-0"
5B	12" x 1/2' x 9'-0"

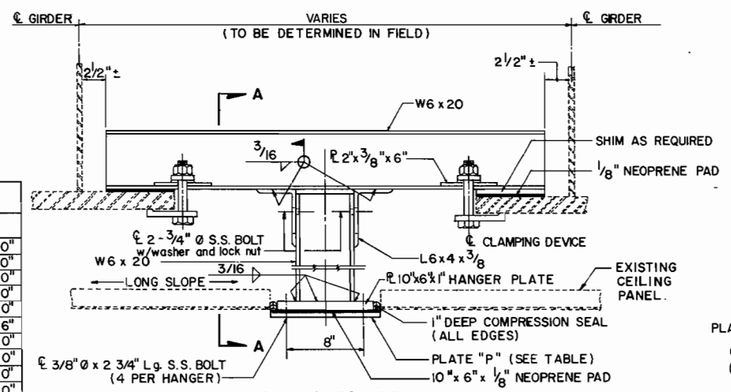

NEW HANGER DETAIL

SCALE: 1½" = 1'-0"

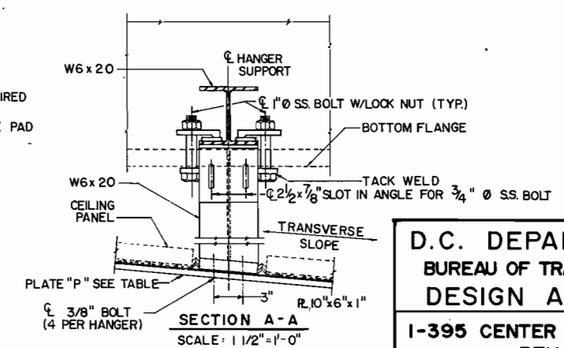

SECTION A-A

SCALE: 1 1/2" = 1'-0"

NOTES:

1. EXISTING HANGER LOCATIONS SHOWN ARE REPRODUCED FROM DRAWING NO. 10, 11, 12 & 13 OF DISTRICT OF COLUMBIA DEPARTMENT OF TRANSPORTATION GUIDE SIGN IMPROVEMENTS ON THE FREEWAY SYSTEMS FEDERAL AID PROJECT NO. IR-9999 (523) DATED OCT. 28, 1982.
2. FOR CEILING SIGN HANGER DETAILS SEE THIS DRAWING AND DRAWING C.128
3. FOR GUIDE SIGN DETAILS SEE DRAWING NO. C121.
4. THE MINIMUM VERTICAL CLEARANCE BETWEEN TOP OF ROADWAY AND BOTTOM OF GUIDE SIGN SHALL NOT BE LESS THAN 13'-0".
5. FOR ELECTRICAL DETAILS SEE DWG E308.

D.C. DEPARTMENT OF PUBLIC WORKS
BUREAU OF TRANSPORTATION CONSTRUCTION SERVICES
DESIGN AND ENGINEERING DIVISION

I-395 CENTER LEG OF THE INNER LOOP REHABILITATION OF THE MALL TUNNEL

TUNNEL GUIDE SIGNS - LOCATIONS

PROJECT ENG. G.M.
DESIGNED BY R.A.
CHECKED BY G.M.
DRAWN BY H.A.S./M.W.
PROJECT MGR. I.B.

DIVISION CHIEF

DATE

FILE 1142

TIPPETTS·ABBETT·McCARTHY·STRATTON
ENGINEERS, ARCHITECTS AND PLANNERS
IN ASSOCIATION WITH:
FLEMING CORPORATION

NO.	DESCRIPTION	NAME	DATE

REVISIONS

REG. NO.	STATE	PROJECT NO.	NO.	SHEETS
3	D.C.	IR-395-1(150)	38	199

NOTE:

1. EXISTING LANE CONTROL SIGNS TO BE SALVAGED AND RETURNED TO D.C. DPW.
2. DIMENSION OF VARIABLE MESSAGE SIGN IS APPROXIMATE TO ALLOCATE REQUIRED MESSAGE. SEE SPECIAL PROVISION IN SPECIFICATIONS.
3. PROVIDE VERTICAL CONTROL JOINTS IN NEW CMU BACK-UP WALL AT EVERY 30'-0" MAX.

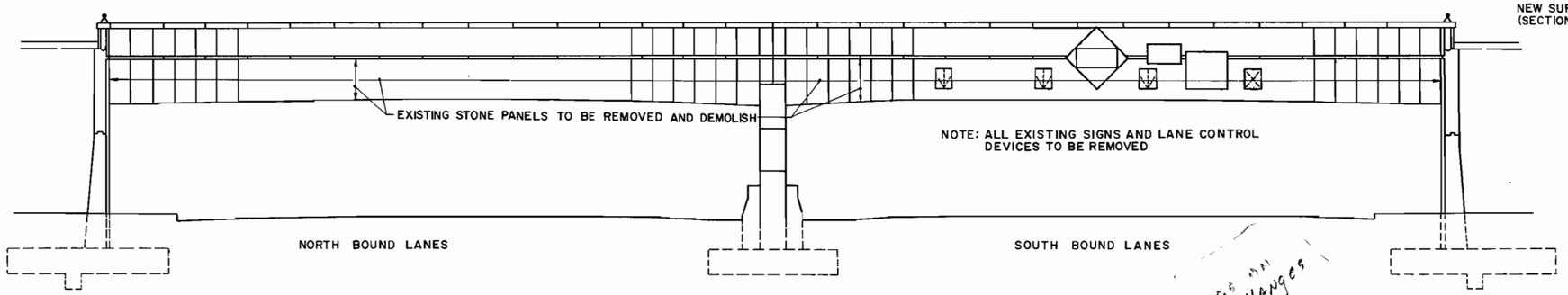

EXISTING SIGNS @ NORTH PORTAL

SCALE: 1/8"=1'-0"

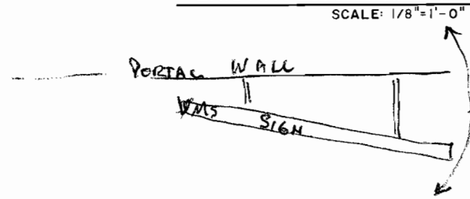

See NEW DRAWINGS AS REQUIRED FOR CHANGES TO ANGLE OF SIGN

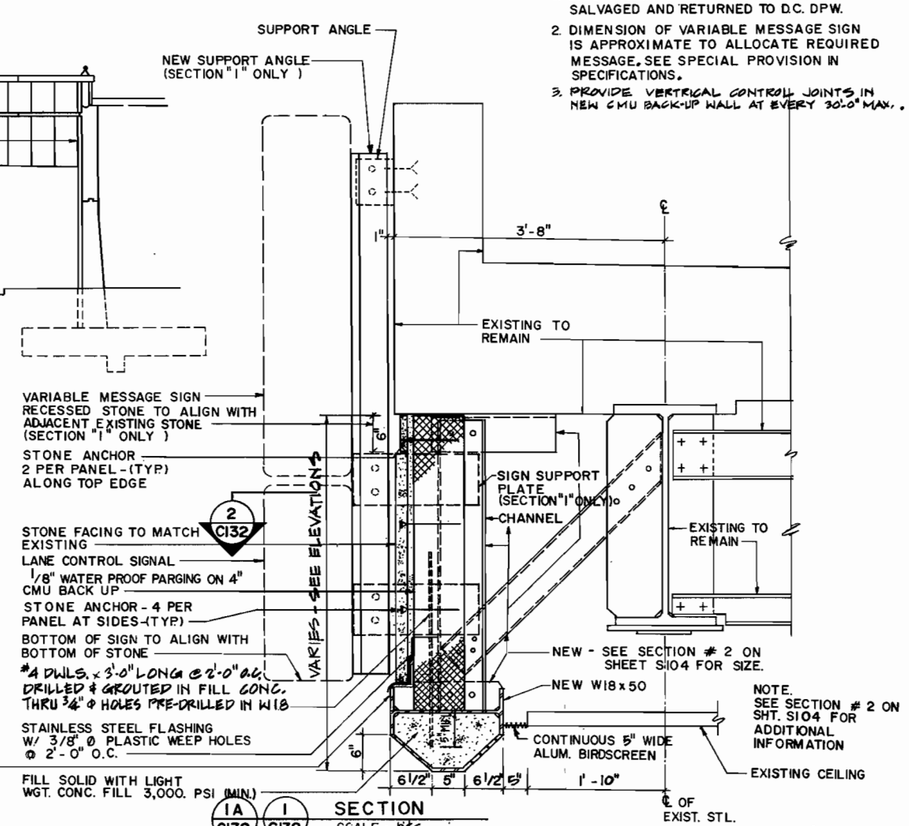

NOTE. SEE SECTION # 2 ON SHT. S104 FOR ADDITIONAL INFORMATION

COLOR TO MATCH EXISTING STONE PANELS. CONTRACTOR SHOULD SUBMIT COLOR CHIPS TO ENGINEERS FOR APPROVAL.

1A C132 1 C132 SECTION

SCALE: n.t.s.

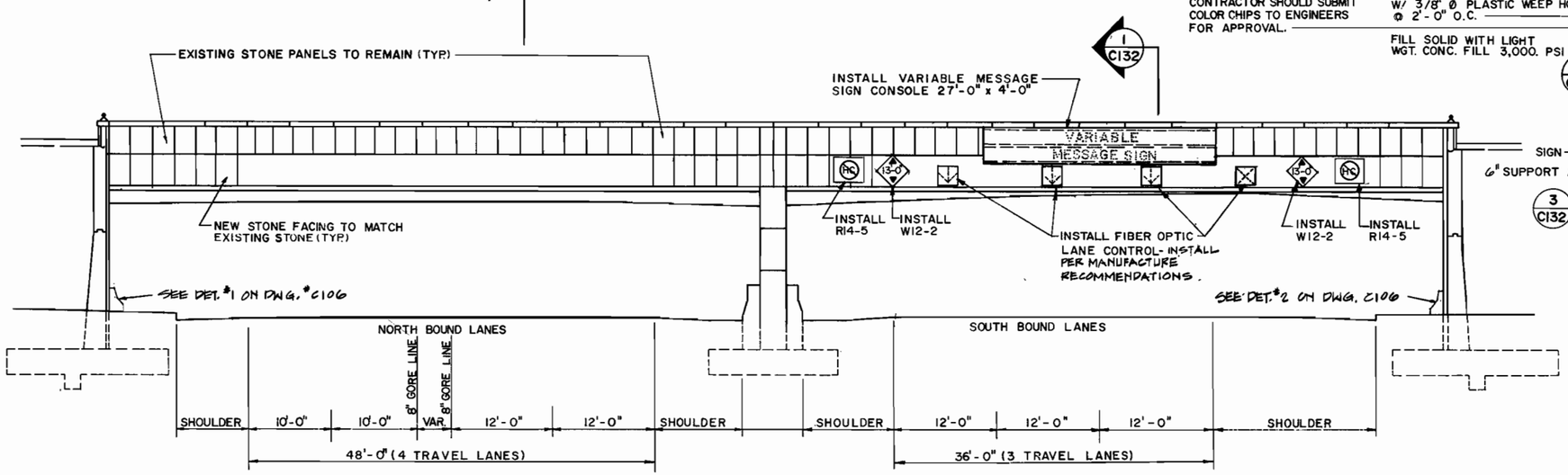

PROPOSED SIGNS @ NORTH PORTAL

SCALE: 1/8" = 1'-0"

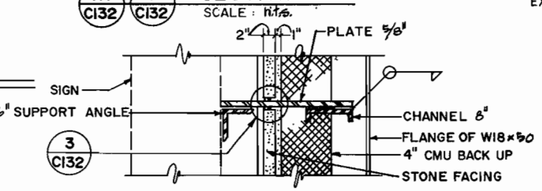

2 C132 TYPICAL PLAN SECTION AT SIGN SUPPORT PLATE

n.t.s.

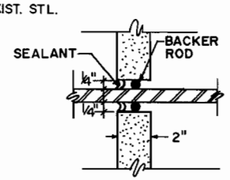

3 C132 TYPICAL JOINT SEALANT DETAIL

n.t.s.

SECTION OF TUNNEL PORTAL AND VARIABLE MESSAGE SIGN

N. T. S.

D.C. DEPARTMENT OF PUBLIC WORKS
BUREAU OF TRANSPORTATION CONSTRUCTION SERVICES
DESIGN AND ENGINEERING DIVISION

I-395 CENTER LEG OF THE INNER LOOP REHABILITATION OF
THE MALL TUNNEL

VARIABLE MESSAGE SIGN. NORTH PORTAL

PROJECT ENG. G.M.
DESIGNED BY A.M.W.
CHECKED BY G.M.
DRAWN BY H.A.S.
PROJECT MGR. I.B.

DIVISION CHIEF

DATE

FILE 1142

TIPPETTS.ABBETT.McCARTHY.STRATTON
ENGINEERS, ARCHITECTS AND PLANNERS
IN ASSOCIATION WITH:
FLEMING CORPORATION

NO	DESCRIPTION	NAME	DATE

REVISIONS

FINAL REG. NO.	STATE	FED AID PROJECT NO.	SHEET NO.	TOTAL SHEETS
3	D.C.	IR-395-1(150)	39	199

NOTES:

1. FOR VARIABLE MESSAGE SIGN AND WARNING SIGN REFER TO SPECIAL PROVISIONS IN SPECIFICATIONS.
2. DIMENSION OF VARIABLE MESSAGE SIGN AND WARNING SIGN ARE APPROXIMATE TO ALLOCATE REQUIRED MESSAGE. SEE SPECIAL PROVISION.
3. THE CONTRACTOR IS TO PROVIDE A STRUCTURALLY SOUND SUPPORTING SCHEME IN COORDINATION WITH THE MANUFACTURER OF THE VARIABLE MESSAGE SIGN. THE SHOWN SUPPORTING TRUSS IS A SUGGESTED SCHEME ONLY.

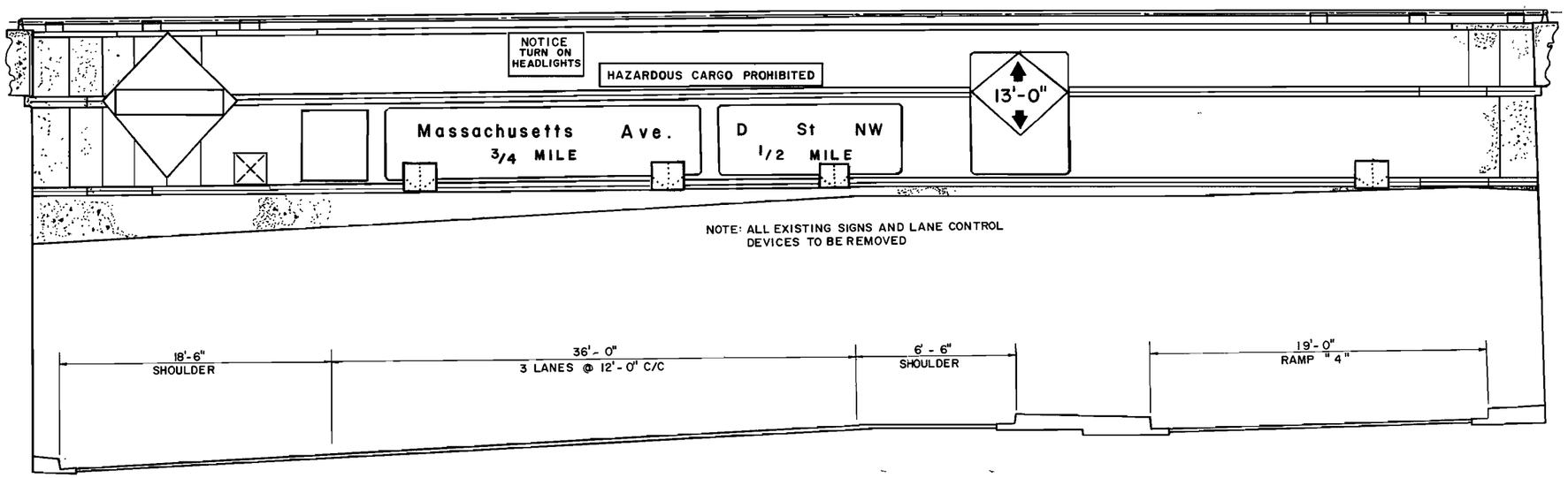

EXISTING SIGNS @ SOUTH PORTAL

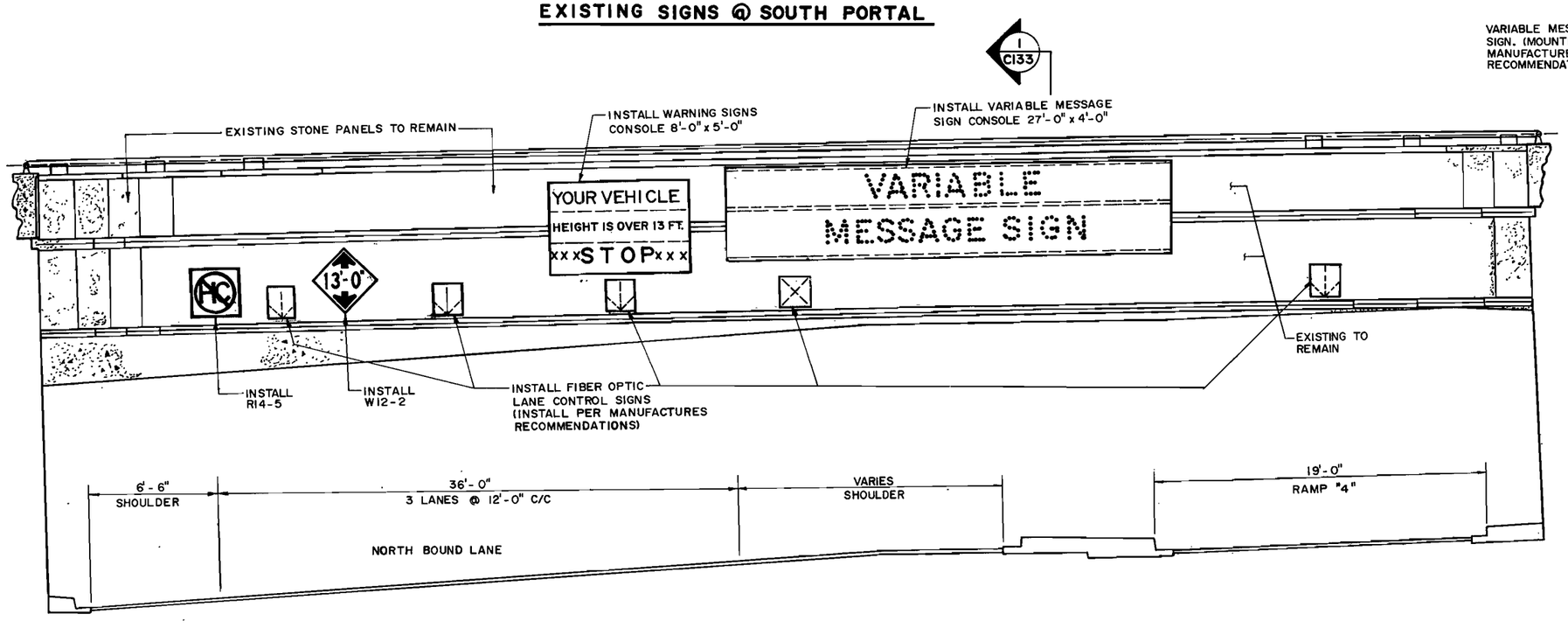

PROPOSED SIGNS @ SOUTH PORTAL

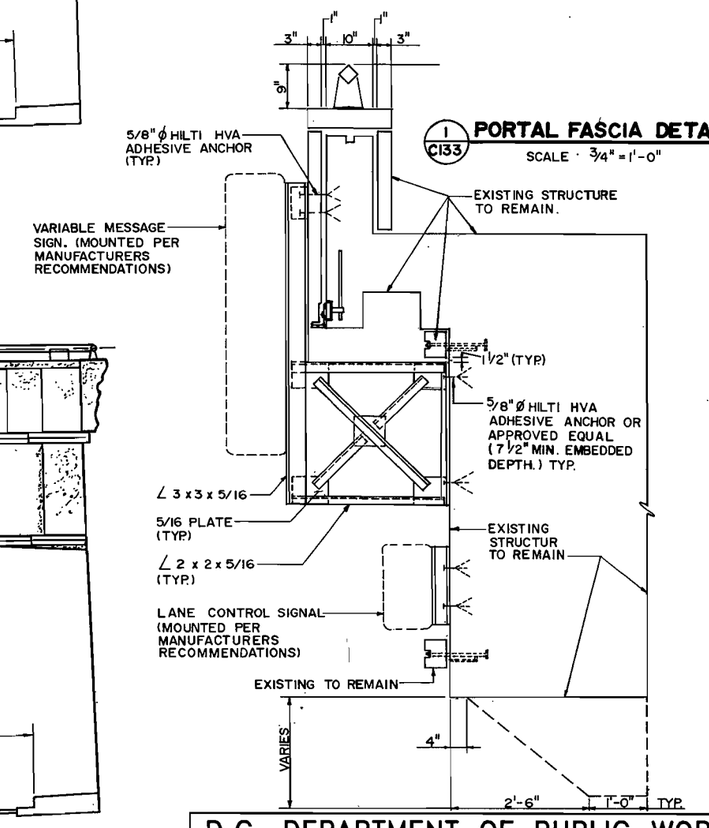

1 C133 **PORTAL FASCIA DETAIL**
SCALE · 3/4" = 1'-0"

TIPPETTS.ABBETT.McCARTHY.STRATTON
ENGINEERS, ARCHITECTS AND PLANNERS
IN ASSOCIATION WITH:
FLEMING CORPORATION

NO	DESCRIPTION	NAME	DATE

REVISIONS

D.C. DEPARTMENT OF PUBLIC WORKS
BUREAU OF TRANSPORTATION CONSTRUCTION SERVICES
DESIGN AND ENGINEERING DIVISION

I-395 CENTER LEG OF THE INNER LOOP
REHABILITATION OF
THE MALL TUNNEL

VARIABLE MESSAGE SIGNS
SOUTH PORTAL

PROJECT ENG. G.M.
DESIGNED BY
CHECKED BY G.M.
DRAWN BY H.A.S.
PROJECT MGR. I.B.

DIVISION CHIEF
DATE
FILE 1142

REG. NO.		PROJECT NO.	NO.	SHEETS
3	D.C.	IR-395-1(150)	40	199

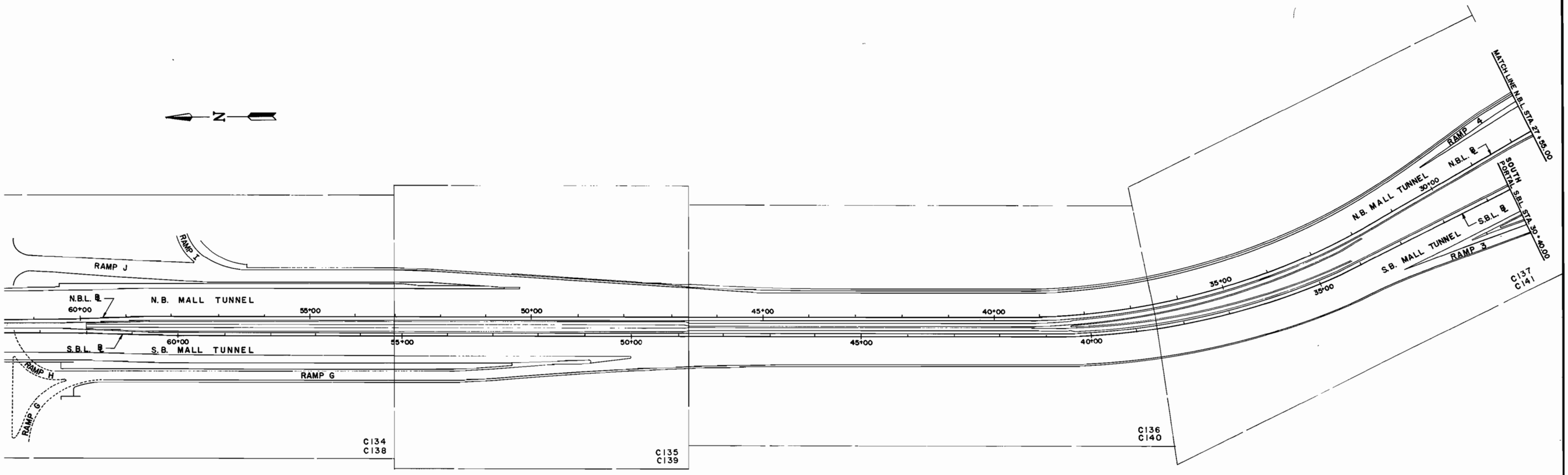

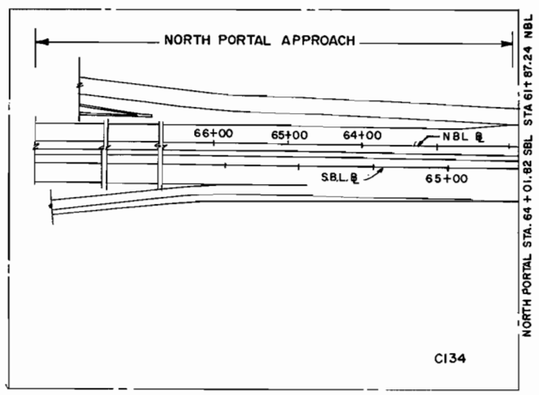

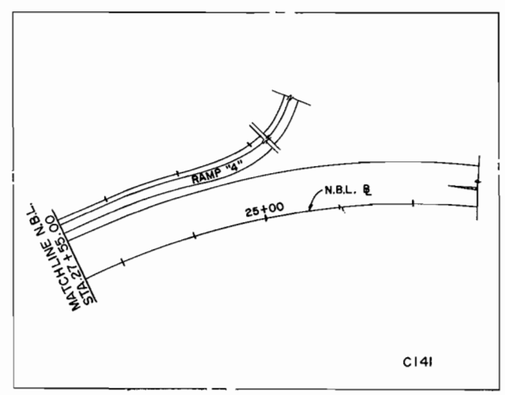

NOTES:

1. FOR MAINTENANCE OF TRAFFIC PLANS AND DETAILS, SEE DWGS. C134 THROUGH C142.
2. FOR NORTH PORTAL APPROACH, SEE DWG. C134.
3. FOR RAMP "4" & N.B. MALL TUNNEL APPROACH, SEE DWG. C141.

SCALE : 1" = 100'- 0"

TIPPETTS. ABBETT. McCARTHY. STRATTON
ENGINEERS, ARCHITECTS AND PLANNERS
IN ASSOCIATION WITH :
FLEMING CORPORATION

NO.	DESCRIPTION	NAME	DATE

REVISIONS

D.C. DEPARTMENT OF PUBLIC WORKS
BUREAU OF TRANSPORTATION CONSTRUCTION SERVICES
DESIGN AND ENGINEERING DIVISION

I-395 CENTER LEG OF THE INNER LOOP
REHABILITATION OF
THE MALL TUNNEL

MAINTENANCE OF TRAFFIC
KEY PLAN

PROJECT ENG. G.M.
DESIGNED BY R.A.
CHECKED BY G.M.
DRAWN BY C.N.
PROJECT MGR. L.B.

DIVISION CHIEF
DATE
FILE 1142
SHEET 40 OF 199

REG. NO.	CIRCLE	PROJECT NO.	NO.	SHEETS
3	D.C.	IR-395-1(150)	41	199

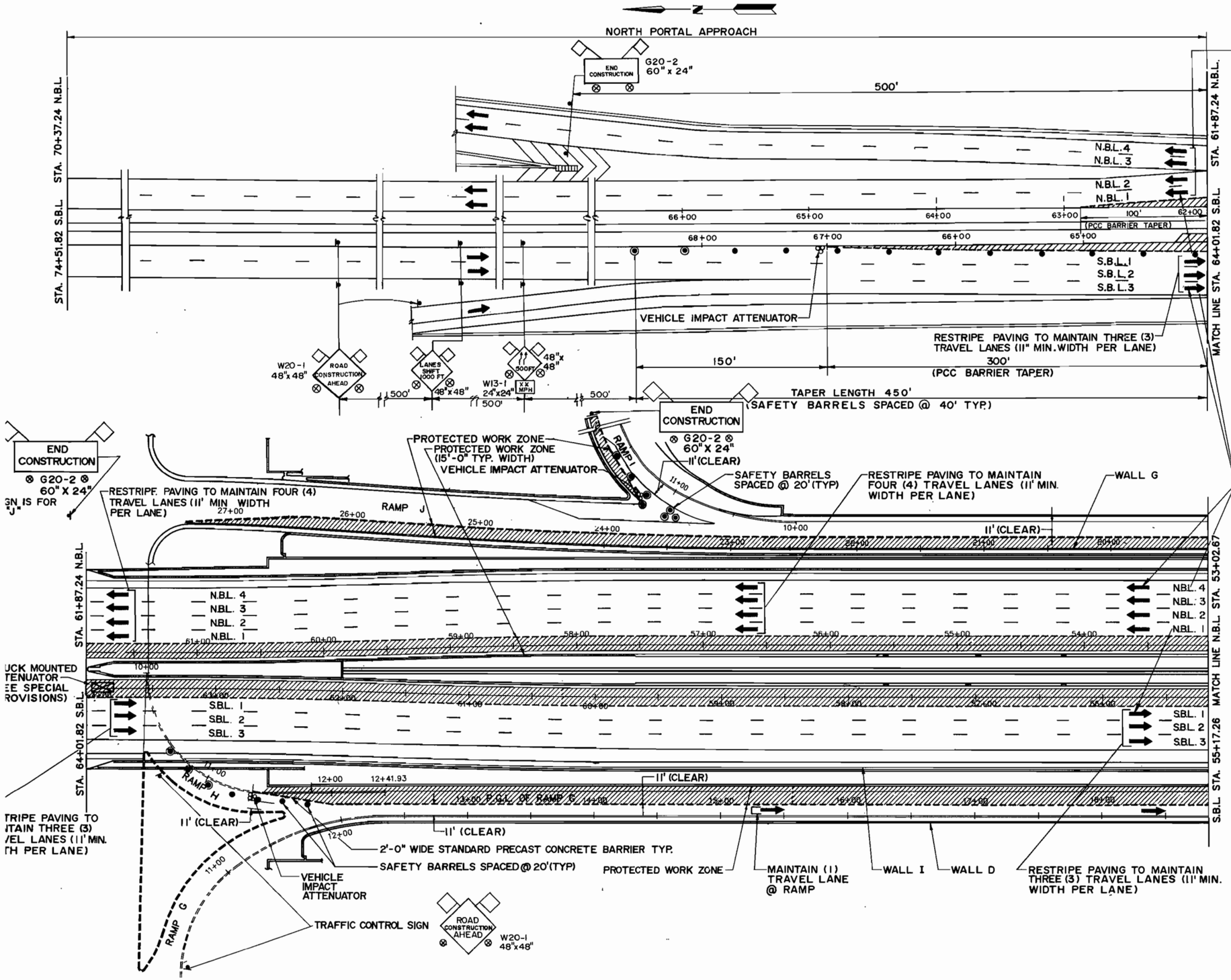

NOTE: THESE ARROWS ARE FOR THE DIRECTION OF TRAFFIC ONLY AND ARE NOT TO BE MARKED BY THE CONTRACTOR.

TRAFFIC CONTROL NOTES:

1. CONTRACTORS MAINTENANCE OF TRAFFIC PROCEDURES SHALL CONFORM TO THE REQUIREMENTS OF MUTCD AND DISTRICT OF COLUMBIA STANDARDS.
2. SPECIFIED WARNING SIGNS, LIGHTS, BARRICADES AND ARROW BOARDS SHALL BE USED AS REQUIRED.
3. CONSTRUCTION WARNING SIGNS ARE TO BE LOCATED AND ERECTED AS THE FIRST ORDER OF WORK AS SHOWN OR NOTED ON THE PLANS.
4. REMOVE EXISTING LANE MARKINGS AS NECESSARY AND PLACE TEMPORARY LANE MARKINGS AS REQUIRED TO DIRECT TRAFFIC AROUND CONSTRUCTION AREA.
5. CONTRACTOR TO PROVIDE PRECAST CONCRETE TRAFFIC BARRIER WITH WARNING LIGHTS TO PROTECT WORK ZONE.
6. N.B.L. X - NORTH BOUND LANE X
   S.B.L. Y - SOUTH BOUND LANE Y
   LANE DESIGNATION FOR MAINTENANCE OF TRAFFIC SEQUENCING
7. STRIPING SHOWN ON MAINTENANCE OF TRAFFIC DRAWINGS IS TEMPORARY ONLY. SEE PAVEMENT MARKING PLANS FOR FINAL STRIPING LAYOUT.

LEGEND

- ⊗ TYPE B LIGHTS
- PROTECTED WORK ZONE
- TRAFFIC LANE
- 2'-0" WIDE STANDARD PCC BARRIER
- • SAFETY BARRELS W/ TYPE C LIGHTS
- ◉ SAFETY BARRELS W/ TYPE A LIGHTS
- VEHICLE IMPACT ATTENUATOR
- TRUCK MOUNTED ATTENUATOR

SCALE: 1" = 40'

TIPPETTS.ABBETT.McCARTHY.STRATTON
ENGINEERS, ARCHITECTS AND PLANNERS
IN ASSOCIATION WITH:
FLEMING CORPORATION

NO	DESCRIPTION	NAME	DATE

REVISIONS

D.C. DEPARTMENT OF PUBLIC WORKS
BUREAU OF TRANSPORTATION CONSTRUCTION SERVICES
DESIGN AND ENGINEERING DIVISION

I-395 CENTER LEG OF THE INNER LOOP
REHABILITATION OF
THE MALL TUNNEL

MAINTENANCE OF TRAFFIC PLANS
PHASE 1 RUSH HOUR

PROJECT ENG. G.M.
DESIGNED BY J.B.
CHECKED BY G.M.
DRAWN BY M.Z./H.S.
PROJECT MGR. I.B.

DIVISION CHIEF
DATE
FILE 1142
SHEET 41 OF 199

REG. NO.	STATE	PROJECT NO.	NO.	SHEETS
3	D.C.	IR-395-1(150)	42	199

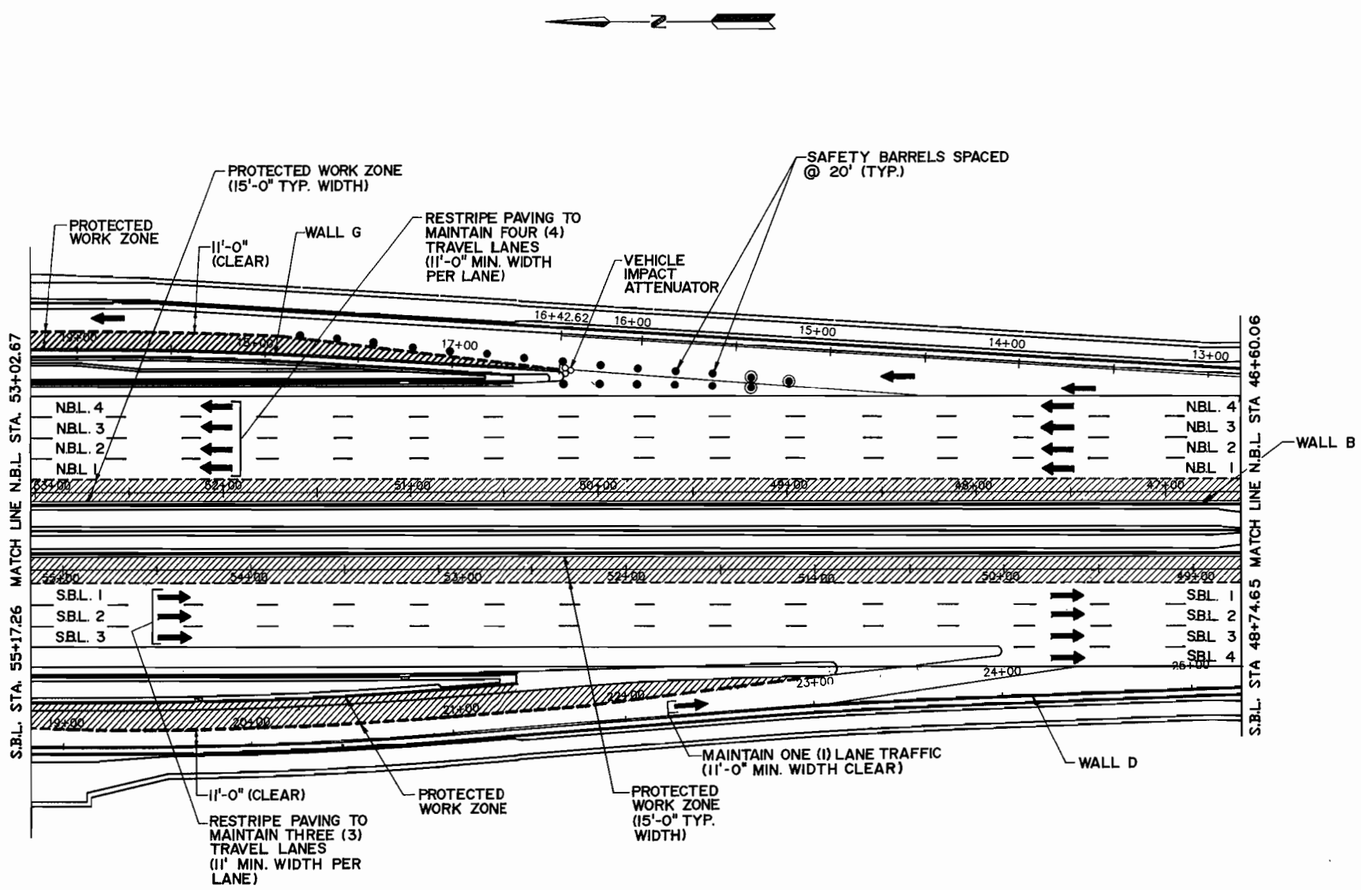

NOTE:

FOR TRAFFIC CONTROL NOTES SEE DWG. C134

LEGEND

- ⊗ TYPE B LIGHTS
- PROTECTED WORK ZONE
- TRAFFIC LANE
- ---- 2'-0" WIDE STANDARD PCC BARRIER
- • SAFETY BARRELS W/ TYPE C LIGHTS
- ◉ SAFETY BARRELS W/ TYPE A LIGHTS
- VEHICLE IMPACT ATTENUATOR
- TRUCK MOUNTED ATTENUATOR

SCALE 1" = 40'

TIPPETTS.ABBETT.McCARTHY.STRATTON
ENGINEERS, ARCHITECTS AND PLANNERS
IN ASSOCIATION WITH:
FLEMING CORPORATION

NO	DESCRIPTION	NAME	DATE

REVISIONS

D.C. DEPARTMENT OF PUBLIC WORKS
BUREAU OF TRANSPORTATION CONSTRUCTION SERVICES
DESIGN AND ENGINEERING DIVISION

I-395 CENTER LEG OF THE INNER LOOP
REHABILITATION OF
THE MALL TUNNEL

MAINTENANCE OF TRAFFIC PLANS
PHASE 1 RUSH HOUR

PROJECT ENG. G.M.
DESIGNED BY J.B.
CHECKED BY G.M.
DRAWN BY M.Z./M.W.
PROJECT MGR. I.B.

DIVISION CHIEF
DATE
FILE 1142

REG. NO.	STATE	PROJECT NO.	SHEET NO.	TOTAL SHEETS
3	D.C.	IR-395-1(150)	43	199

NOTE:

1. FOR TRAFFIC CONTROL NOTES SEE C134.

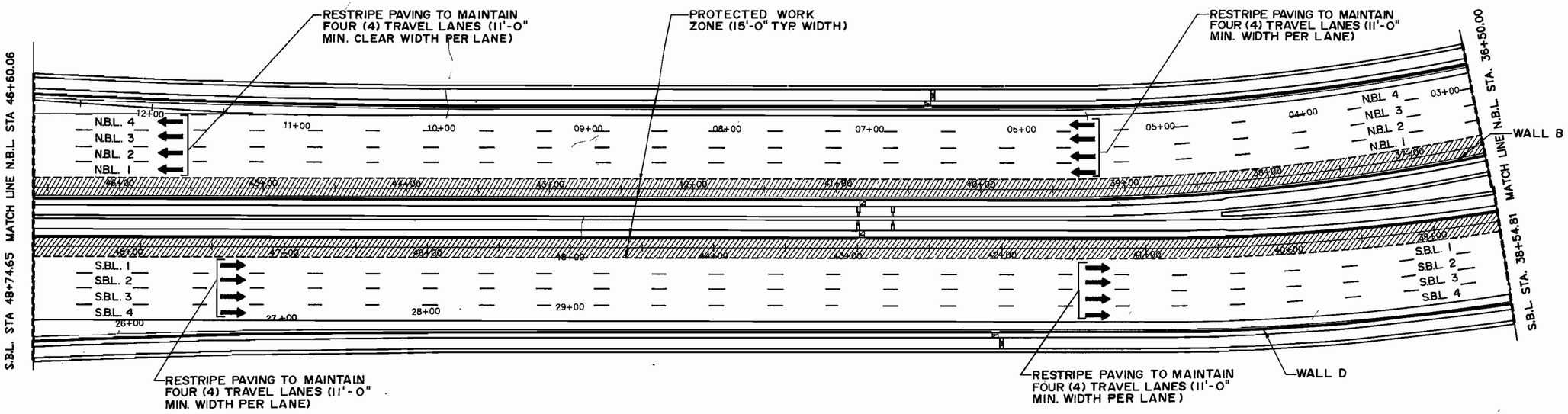

RESTRIPE PAVING TO MAINTAIN FOUR (4) TRAVEL LANES (11'-0" MIN. WIDTH PER LANE)

RESTRIPE PAVING TO MAINTAIN FOUR (4) TRAVEL LANES (11'-0" MIN. WIDTH PER LANE)

LEGEND

- TYPE B LIGHTS
- PROTECTED WORK ZONE
- TRAFFIC LANE
- 2'-0" WIDE STANDARD PCC BARRIER
- SAFETY BARRELS W/ TYPE C LIGHTS
- SAFETY BARRELS W/ TYPE A LIGHTS
- VEHICLE IMPACT ATTENUATOR
- TRUCK MOUNTED ATTENUATOR

SCALE: 1"=40'

TIPPETTS.ABBETT.McCARTHY.STRATTON
ENGINEERS, ARCHITECTS AND PLANNERS
IN ASSOCIATION WITH:
FLEMING CORPORATION

NO	DESCRIPTION	NAME	DATE

REVISIONS

D.C. DEPARTMENT OF PUBLIC WORKS
BUREAU OF TRANSPORTATION CONSTRUCTION SERVICES
DESIGN AND ENGINEERING DIVISION

I-395 CENTER LEG OF THE INNER LOOP
REHABILITATION OF
THE MALL TUNNEL

MAINTENANCE OF TRAFFIC PLANS
PHASE 1 RUSH HOUR

PROJECT ENG. G.M.
DESIGNED BY J.B.
CHECKED BY G.M.
DRAWN BY M.Z./H.S.
PROJECT MGR. I.B.

DIVISION CHIEF
DATE
FILE 1142

REG. NO.		PROJECT NO.	NO.	SHEETS
3	D.C.	IR-395-1(150)	44	199

NOTE :

FOR TRAFFIC CONTROL NOTES SEE C134

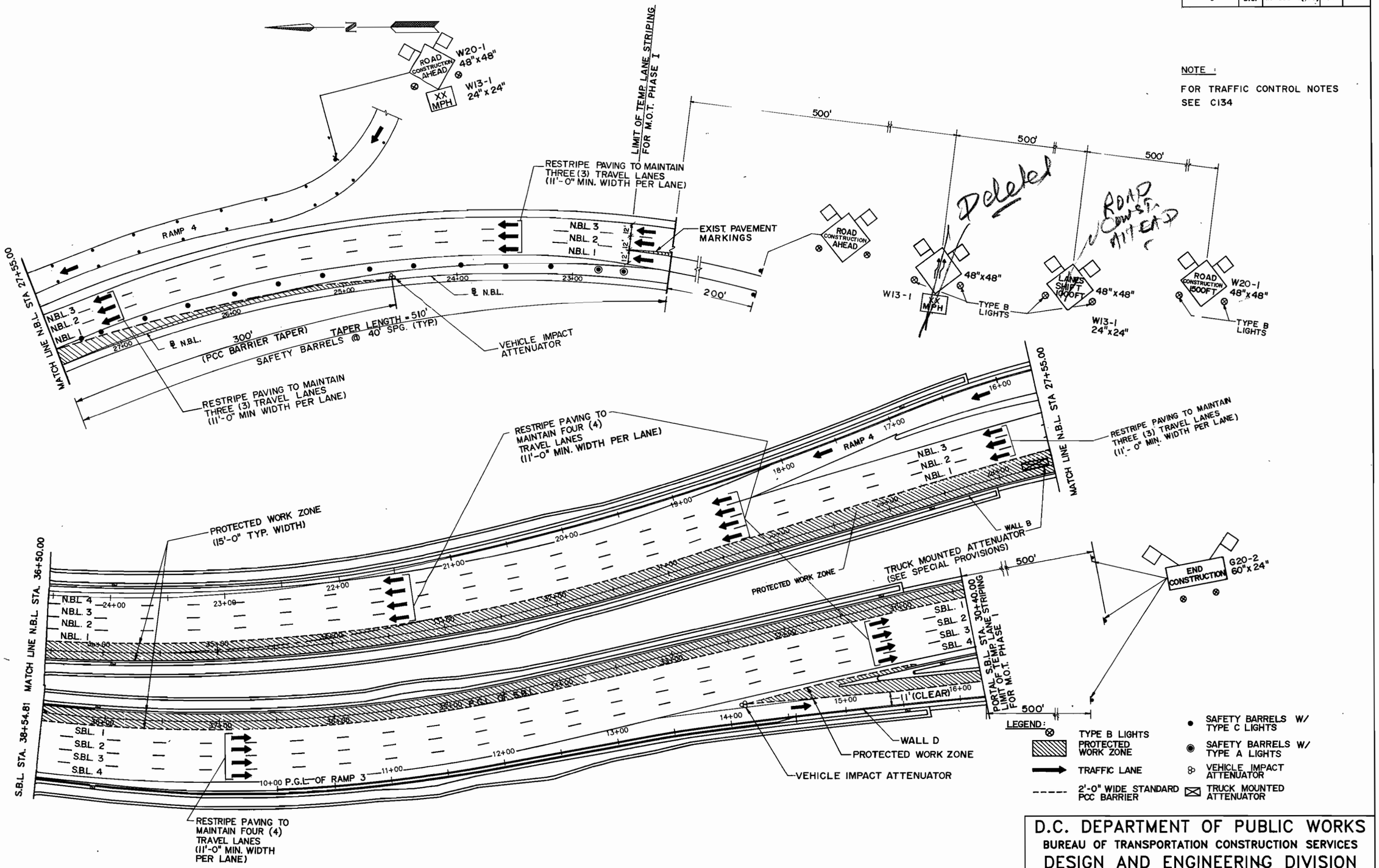

SCALE: 1"=40'

TIPPETTS.ABBETT.McCARTHY.STRATTON
ENGINEERS, ARCHITECTS AND PLANNERS
IN ASSOCIATION WITH:
FLEMING CORPORATION

NO	DESCRIPTION	NAME	DATE
	REVISIONS		

D.C. DEPARTMENT OF PUBLIC WORKS
BUREAU OF TRANSPORTATION CONSTRUCTION SERVICES
DESIGN AND ENGINEERING DIVISION

I-395 CENTER LEG OF THE INNER LOOP
REHABILITATION OF
THE MALL TUNNEL

MAINTENANCE OF TRAFFIC PLANS
PHASE 1 RUSH HOUR

PROJECT ENG. G.M.
DESIGNED BY J.B.
CHECKED BY G.M.
DRAWN BY M.Z./M.W.
PROJECT MGR. J.B.

DIVISION CHIEF
DATE

FILE 1142

SHEET 44 OF 199

REG. NO.	PROJECT NO.	NO.	SHEETS
3	D.C. IR-395-1(150)	45	199

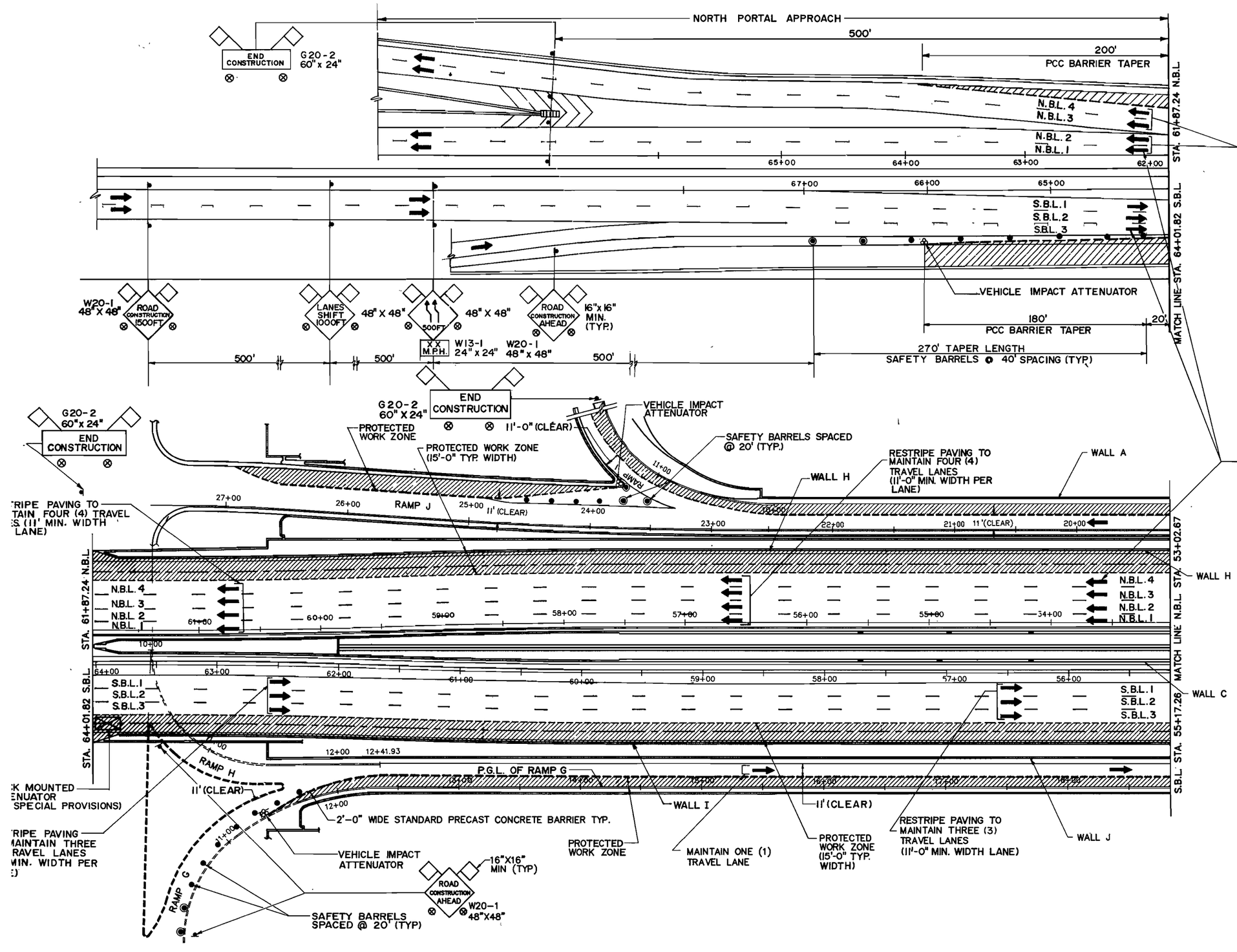

NOTE:

FOR TRAFFIC CONTROL NOTES SEE C 134.

NOTE: THESE ARROWS ARE FOR THE DIRECTION OF TRAFFIC ONLY AND ARE NOT TO BE MARKED BY THE CONTRACTOR (TYP.).

LEGEND

- ⊗ TYPE B LIGHTS
- PROTECTED WORK ZONE
- TRAFFIC LANE
- 2'-0" WIDE STANDARD PCC BARRIER
- • SAFETY BARRELS W/ TYPE C LIGHTS
- ◉ SAFETY BARRELS W/ TYPE A LIGHTS
- VEHICLE IMPACT ATTENUATOR
- TRUCK MOUNTED ATTENUATOR

SCALE 1" = 40'

TIPPETTS.ABBETT.McCARTHY.STRATTON
ENGINEERS, ARCHITECTS AND PLANNERS
IN ASSOCIATION WITH:
FLEMING CORPORATION

NO	DESCRIPTION	NAME	DATE

REVISIONS

D.C. DEPARTMENT OF PUBLIC WORKS
BUREAU OF TRANSPORTATION CONSTRUCTION SERVICES
DESIGN AND ENGINEERING DIVISION

I-395 CENTER LEG OF THE INNER LOOP
REHABILITATION OF
THE MALL TUNNEL

MAINTENANCE OF TRAFFIC PLANS
PHASE 2 RUSH HOUR

PROJECT ENG. G.M.
DESIGNED BY J.B.
CHECKED BY G.M.
DRAWN BY M.Z./MW.
PROJECT MGR. I.B.

DIVISION CHIEF
DATE
FILE 1142
SHEET 45 OF 199

REG. NO.	STATE	FED AID PROJECT NO.	SHEET NO.	TOTAL SHEETS
	D.C.	IR-395-1(150)	46	139

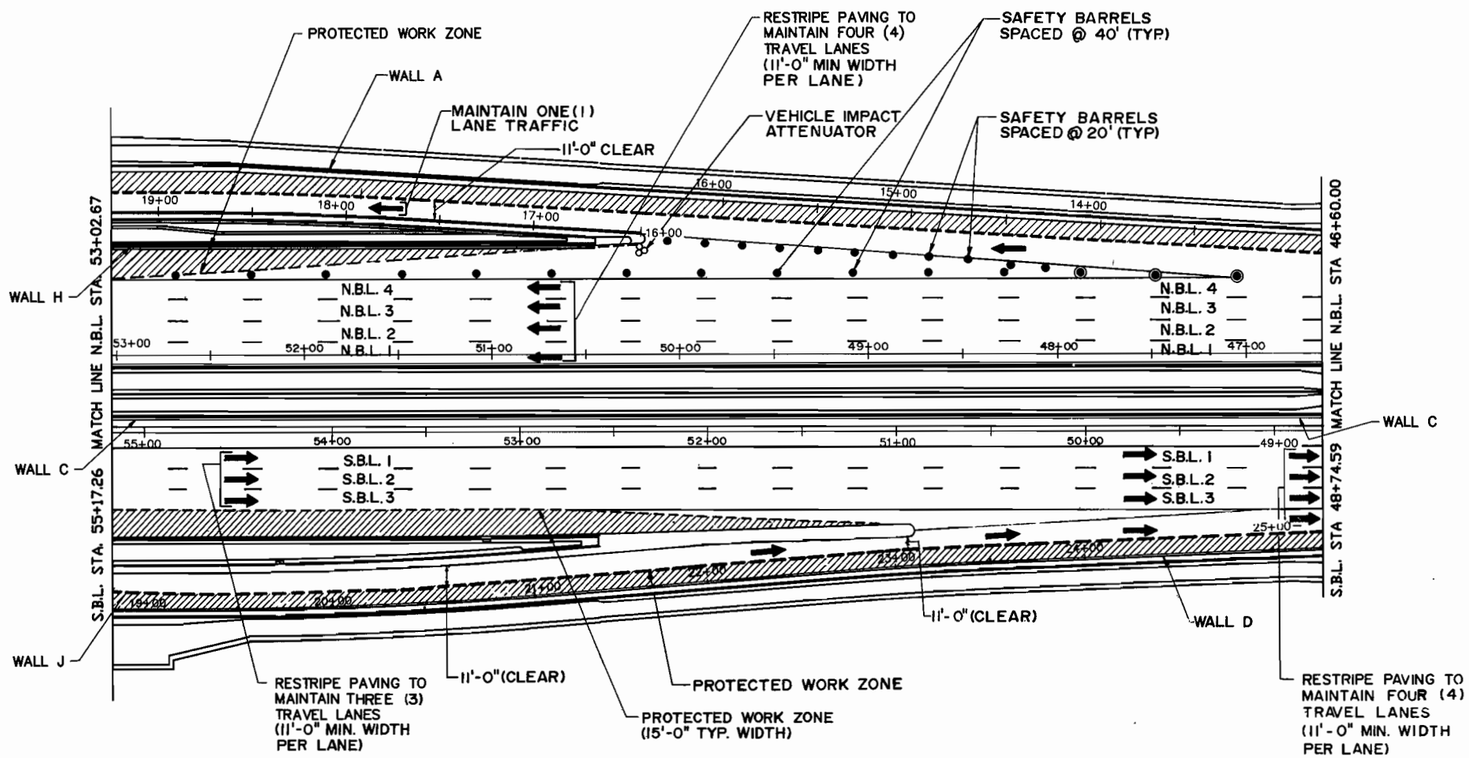

NOTE:

1. FOR TRAFFIC CONTROL NOTES SEE C134

LEGEND

- ⊗ TYPE B LIGHTS
- PROTECTED WORK ZONE
- TRAFFIC LANE
- 2'-0" WIDE STANDARD PCC BARRIER
- • SAFETY BARRELS W/ TYPE C LIGHTS
- ◉ SAFETY BARRELS W/ TYPE A LIGHTS
- VEHICLE IMPACT ATTENUATOR
- TRUCK MOUNTED ATTENUATOR

SCALE 1" = 40'

TIPPETTS.ABBETT.McCARTHY.STRATTON
ENGINEERS, ARCHITECTS AND PLANNERS
IN ASSOCIATION WITH:
FLEMING CORPORATION

NO	DESCRIPTION	NAME	DATE

REVISIONS

D.C. DEPARTMENT OF PUBLIC WORKS
BUREAU OF TRANSPORTATION CONSTRUCTION SERVICES
DESIGN AND ENGINEERING DIVISION

I-395 CENTER LEG OF THE INNER LOOP
REHABILITATION OF
THE MALL TUNNEL

MAINTENANCE OF TRAFFIC PLANS
PHASE 2 RUSH HOUR

PROJECT ENG. G.M.
DESIGNED BY J.B.
CHECKED BY G.M.
DRAWN BY M.Z./H.S.
PROJECT MGR. I.B.

DIVISION CHIEF
DATE
FILE 1142

REG. NO.	STATE	PROJECT NO.	NO.	SHEETS
3	D.C.	IR-395-1(150)	47	199

NOTE:

1. FOR TRAFFIC CONTROL NOTES SEE C134

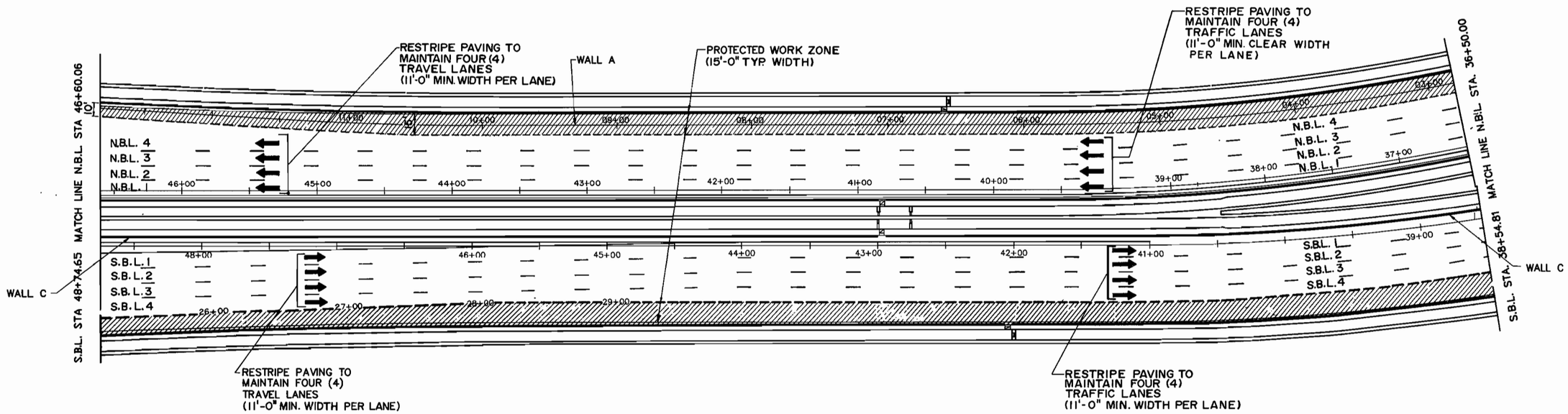

LEGEND

- TYPE B LIGHTS
- SAFETY BARRELS W/ TYPE C LIGHTS
- PROTECTED WORK ZONE
- SAFETY BARRELS W/ TYPE A LIGHTS
- TRAFFIC LANE
- VEHICLE IMPACT ATTENUATOR
- 2'-0" WIDE STANDARD PCC BARRIER
- TRUCK MOUNTED ATTENUATOR

SCALE: 1"=40'

TIPPETTS.ABBETT.McCARTHY.STRATTON
ENGINEERS, ARCHITECTS AND PLANNERS
IN ASSOCIATION WITH:
FLEMING CORPORATION

NO	DESCRIPTION	NAME	DATE

REVISIONS

D.C. DEPARTMENT OF PUBLIC WORKS
BUREAU OF TRANSPORTATION CONSTRUCTION SERVICES
DESIGN AND ENGINEERING DIVISION

I-395 CENTER LEG OF THE INNER LOOP
REHABILITATION OF
THE MALL TUNNEL

MAINTENANCE OF TRAFFIC PLANS
PHASE 2 RUSH HOUR

PROJECT ENG. G.M.
DESIGNED BY J.B
CHECKED BY G.M.
DRAWN BY M.Z./H.S.
PROJECT MGR. I.B.

DIVISION CHIEF

DATE

FILE 1142

SHEET 47 OF 199

F.H.W.A. REG. NO.	STATE	FED AID PROJECT NO.	SHEET NO.	TOTAL SHEETS
3	D.C.	IR-395-1(150)	48	199

NOTE:

FOR TRAFFIC CONTROL NOTES SEE C134.

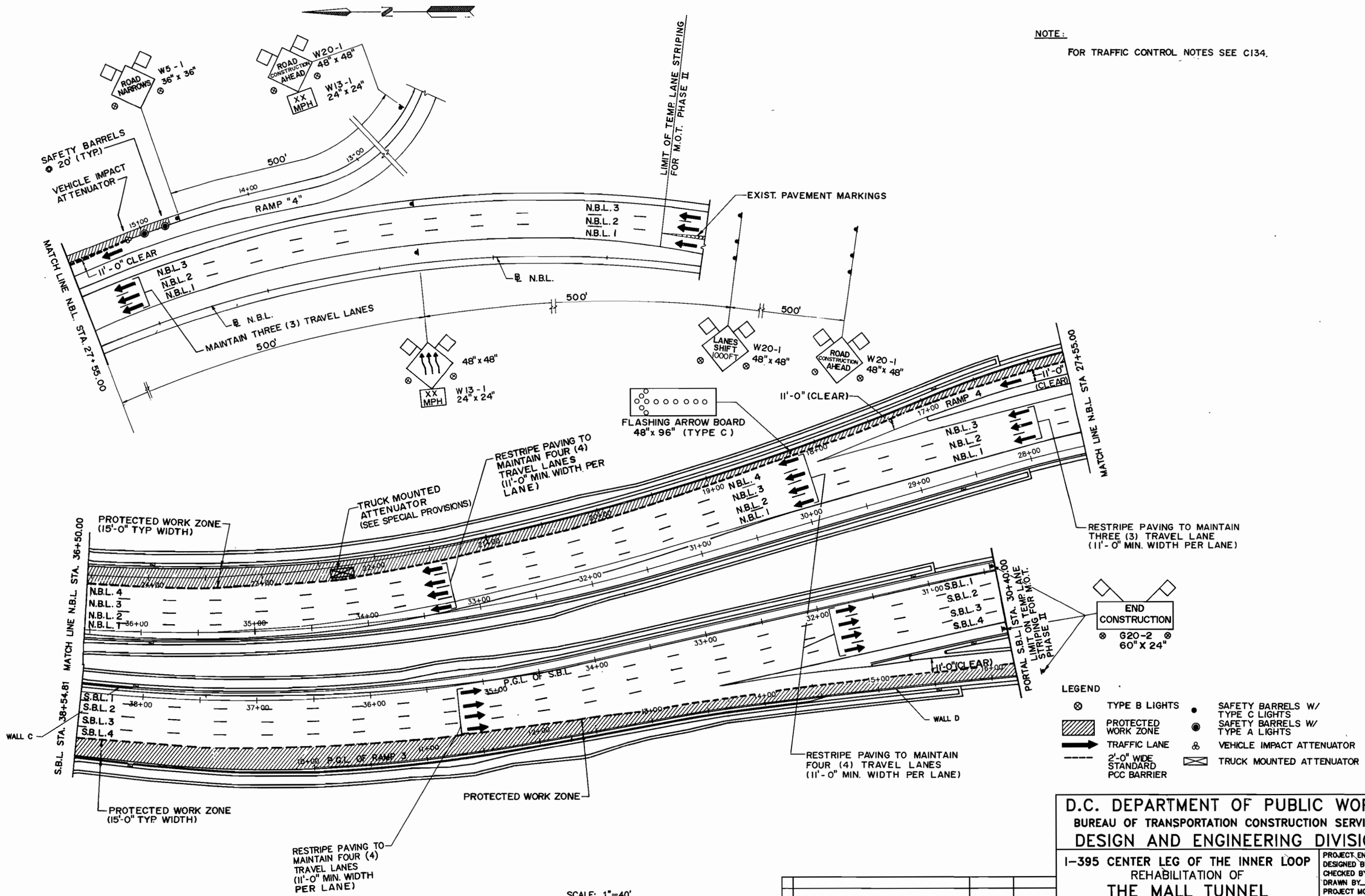

SCALE: 1"=40'

TIPPETTS.ABBETT.McCARTHY.STRATTON
ENGINEERS, ARCHITECTS AND PLANNERS
IN ASSOCIATION WITH:
FLEMING CORPORATION

NO	DESCRIPTION	NAME	DATE

REVISIONS

D.C. DEPARTMENT OF PUBLIC WORKS
BUREAU OF TRANSPORTATION CONSTRUCTION SERVICES
DESIGN AND ENGINEERING DIVISION

I-395 CENTER LEG OF THE INNER LOOP
REHABILITATION OF
THE MALL TUNNEL

MAINTENANCE OF TRAFFIC PLANS
PHASE 2 RUSH HOUR

PROJECT ENG. G.M.
DESIGNED BY J.B.
CHECKED BY G.M.
DRAWN BY MZ.MW.
PROJECT MGR. I.B.

DIVISION CHIEF
DATE
FILE 1142

F.H.W.A. REG. NO.	STATE	FED AID PROJECT NO.	SHEET NO.	TOTAL SHEETS
3	D.C.	IR-395-1(150)	49	199

NOTES:

1. FOR DETAILS REGARDING RAMP LANE CLOSURES, SEE SPECIAL PROVISIONS.
2. FOR DETAILS REGARDING FLAGGING OPERATIONS DURING LIGHTING REPLACEMENT WORK, SEE SPECIAL PROVISIONS.
3. FOR DETAILS REGARDING LANE CLOSURES ADJACENT TO RAMPS, SEE SPECIAL PROVISIONS.
4. FOR DETAILS REGARDING NON-RUSH HOUR OPERATIONS, SEE SPECIAL PROVISIONS.
5. TAPER LENGTHS FOR DOUBLE LANE CLOSURE DETAIL WERE COMPUTED USING 35 M.P.H. DESIGN SPEED.

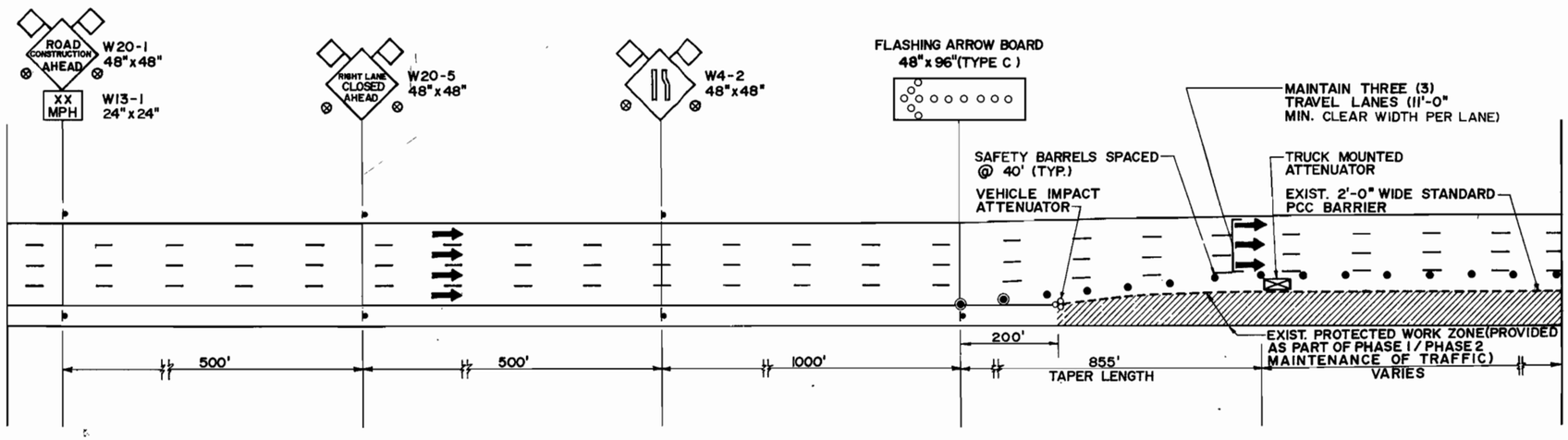

TYPICAL SINGLE LANE CLOSURE FOR PHASE 2

(PHASE 1 IS A REVERSAL)

LEGEND

- TYPE B LIGHTS
- SAFETY BARRELS W/ TYPE C LIGHTS
- PROTECTED WORK ZONE
- SAFETY BARRELS W/ TYPE A LIGHTS
- TRAFFIC LANE (FOR IMFORMATION OF TRAFFIC DIRECTION ONLY)
- VEHICLE IMPACT ATTENUATOR
- TRUCK MOUNTED ATTENUATOR
- 2'-0" WIDE STANDARD PCC BARRIER

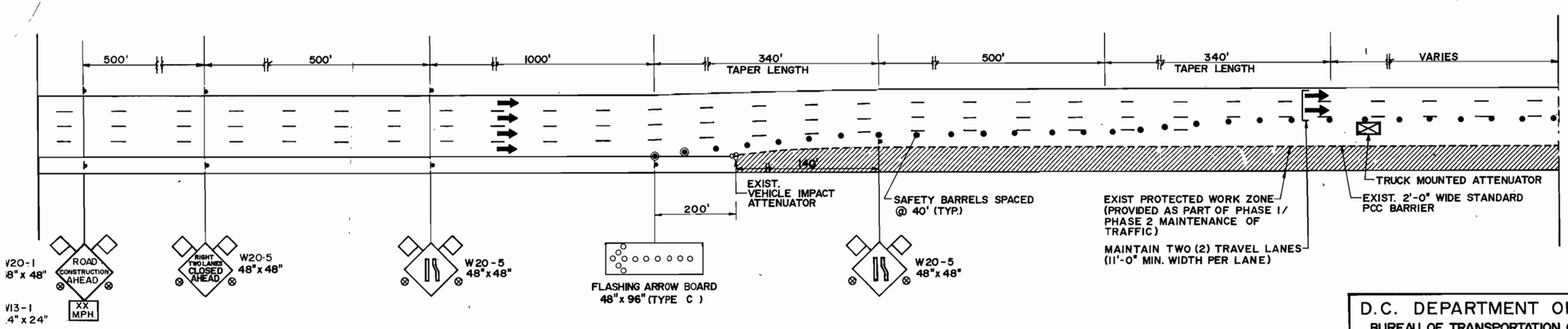

TYPICAL DOUBLE LANE CLOSURE FOR PHASE 2

(PHASE 1 IS A REVERSAL)

SCALE : 1" = 40'

TIPPETTS·ABBETT·McCARTHY·STRATTON
ENGINEERS, ARCHITECTS AND PLANNERS
IN ASSOCIATION WITH:
FLEMING CORPORATION

NO.	DESCRIPTION	NAME	DATE

REVISIONS

D.C. DEPARTMENT OF PUBLIC WORKS
BUREAU OF TRANSPORTATION CONSTRUCTION SERVICES
DESIGN AND ENGINEERING DIVISION

I-395 CENTER LEG OF THE INNER LOOP REHABILITATION OF THE MALL TUNNEL

MAINTENANCE OF TRAFFIC PLANS
NON-RUSH HOUR
TYPICAL LANE CLOSURES

PROJECT ENG. G.M.
DESIGNED BY J.B.
CHECKED BY G.M.
DRAWN BY M.W.
PROJECT MGR. I.B.

DIVISION CHIEF
DATE
FILE 1142

REG. NO.	STATE	PROJECT NO.	NO.	SHEETS
3	D.C.	IR-395-1(150)	50	199

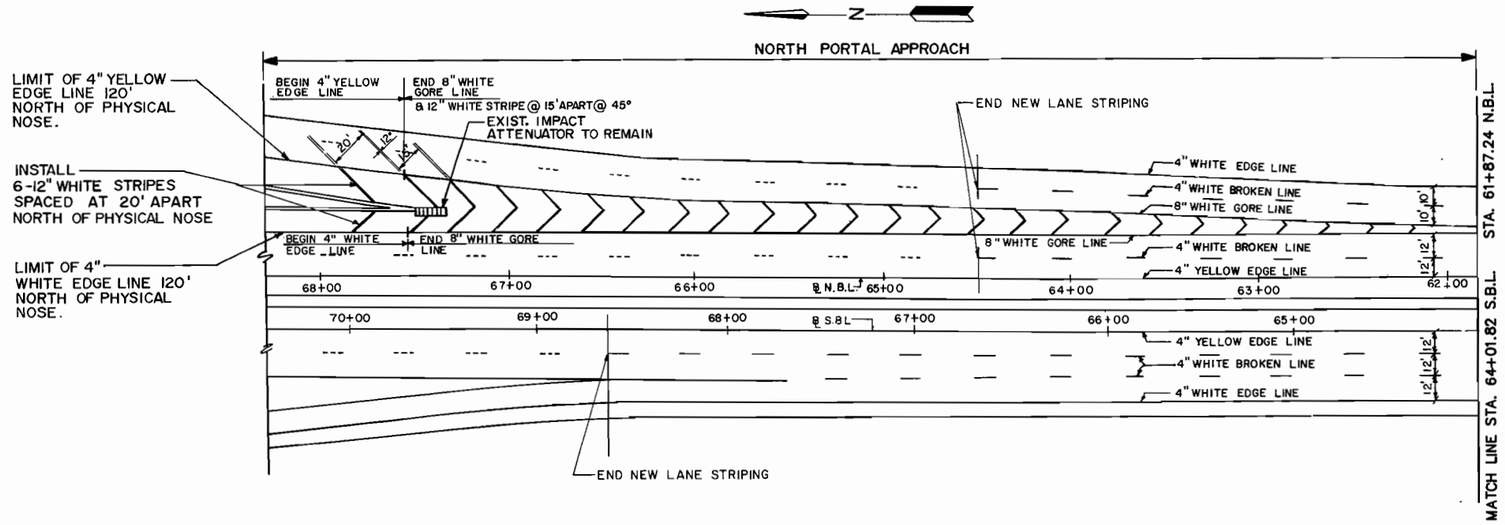

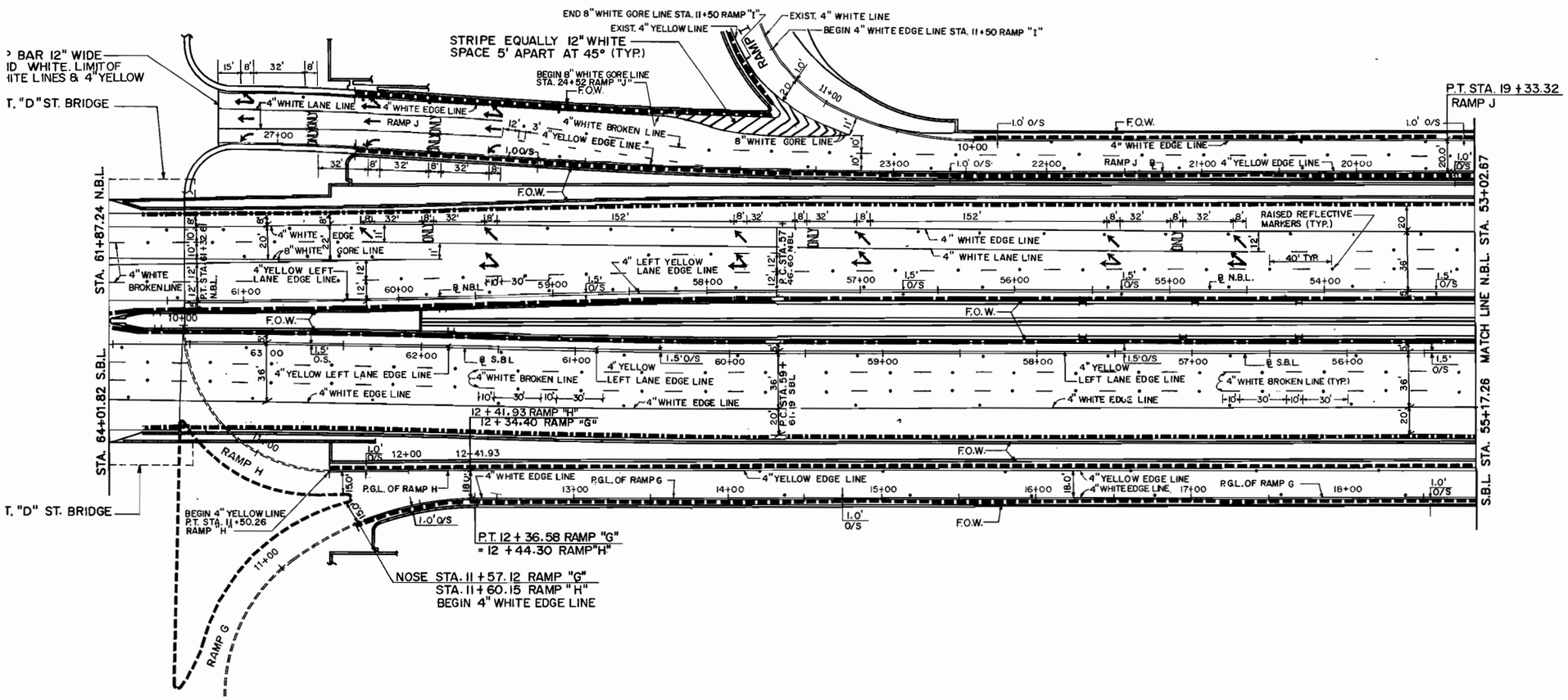

LEGEND

- PROPOSED 1'-6" CONCRETE BARRIER TYPE - 1
- PROPOSED 1'-6" CONCRETE BARRIER TYPE - 2
- PROPOSED 1'-6" CONCRETE BARRIER TYPE - 3
- PROPOSED 1'-6" CONCRETE BARRIER TYPE - 4
- CONCRETE WALL
- RAISED REFLECTIVE MARKER

SCALE: 1" = 40'

TIPPETTS.ABBETT.McCARTHY.STRATTON
ENGINEERS, ARCHITECTS AND PLANNERS
IN ASSOCIATION WITH:
FLEMING CORPORATION

NO	DESCRIPTION	NAME	DATE

REVISIONS

D.C. DEPARTMENT OF PUBLIC WORKS
BUREAU OF TRANSPORTATION CONSTRUCTION SERVICES
DESIGN AND ENGINEERING DIVISION

I-395 CENTER LEG OF THE INNER LOOP
REHABILITATION OF
THE MALL TUNNEL

PAVEMENT MARKING PLAN

PROJECT ENG. G.M.
DESIGNED BY R.A.
CHECKED BY G.M.
DRAWN BY E.S.
PROJECT MGR. J.B.

DIVISION CHIEF
DATE
FILE 1142
SHEET 50 OF 199

REG. NO.	STATE	PROJECT NO.	NO.	SHEETS
3	D.C.	IR-395-1(150)	51	199

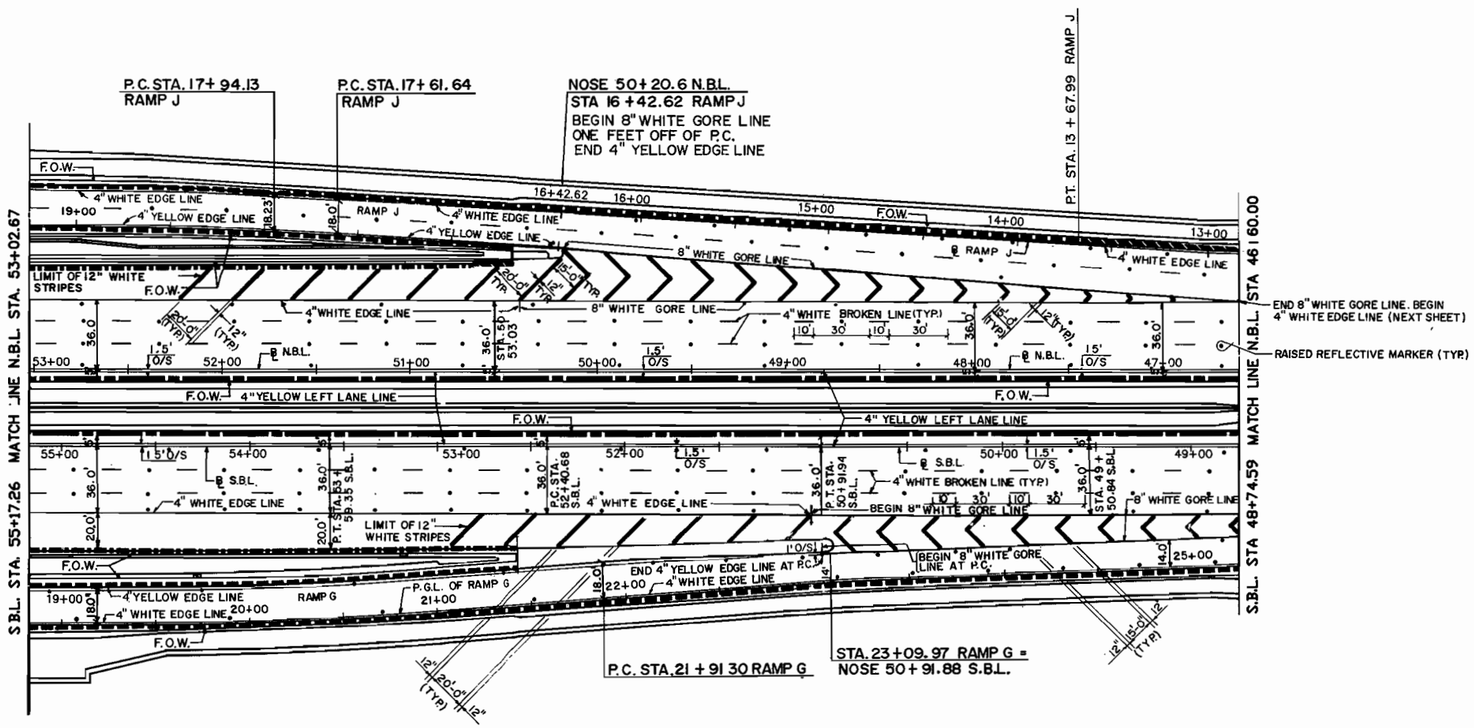

LEGEND

- PROPOSED 1'-6" CONCRETE BARRIER TYPE-1
- PROPOSED 1'-6" CONCRETE BARRIER TYPE-2
- PROPOSED 1'-6" CONCRETE BARRIER TYPE-3
- PROPOSED 1'-6" CONCRETE BARRIER TYPE-4
- CONCRETE WALL
- RAISED REFLECTIVE MARKER

SCALE 1" = 40'

TIPPETTS.ABBETT.McCARTHY.STRATTON
ENGINEERS, ARCHITECTS AND PLANNERS
IN ASSOCIATION WITH:
FLEMING CORPORATION

NO	DESCRIPTION	NAME	DATE

REVISIONS

D.C. DEPARTMENT OF PUBLIC WORKS
BUREAU OF TRANSPORTATION CONSTRUCTION SERVICES
DESIGN AND ENGINEERING DIVISION

I-395 CENTER LEG OF THE INNER LOOP
REHABILITATION OF
THE MALL TUNNEL

PAVEMENT MARKING PLAN

PROJECT ENG. G.M.
DESIGNED BY R.A.
CHECKED BY G.M.
DRAWN BY E.S.
PROJECT MGR. I.B.

DIVISION CHIEF
DATE
FILE 1142

FINANCIAL REG. NO.	STATE	FED AID PROJECT NO.	SHEET NO.	TOTAL SHEETS
3	D.C.	IR-395-1(150)	52	199

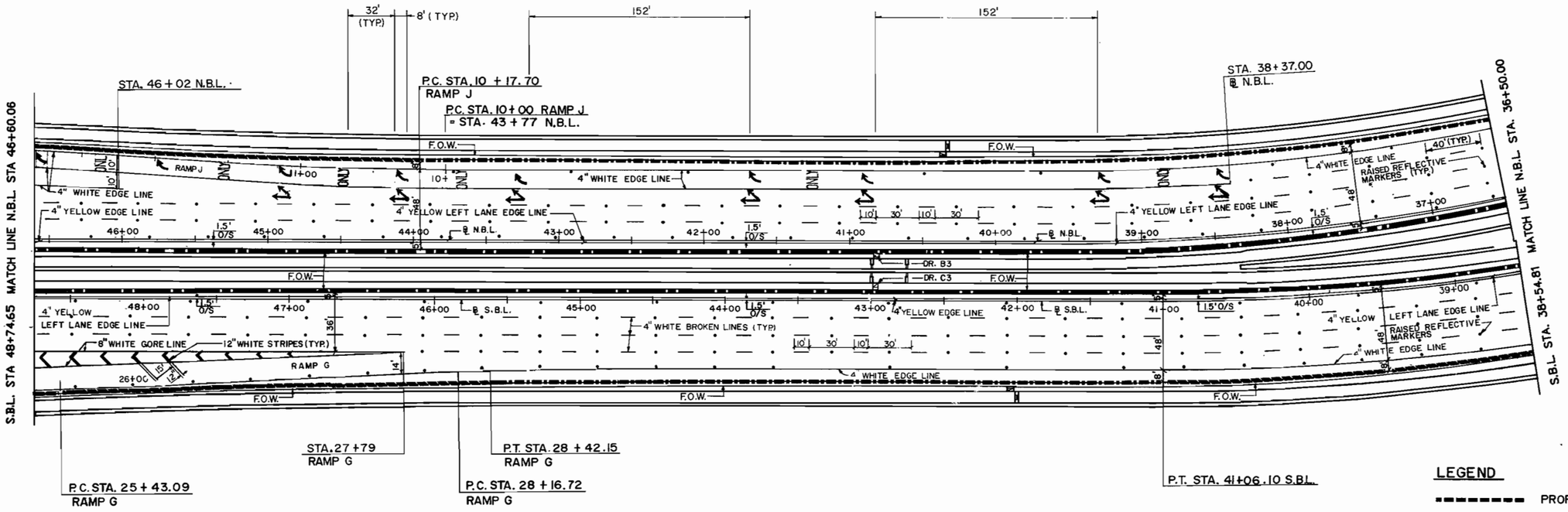

LEGEND

- PROPOSED 1'-6" CONCRETE BARRIER TYPE-1
- PROPOSED 1'-6" CONCRETE BARRIER TYPE-2
- PROPOSED 1'-6" CONCRETE BARRIER TYPE-3
- PROPOSED 1'-6" CONCRETE BARRIER TYPE-4
- CONCRETE WALL
- RAISED REFLECTIVE MARKER

SCALE: 1"=40'

TIPPETTS.ABBETT.McCARTHY.STRATTON
ENGINEERS, ARCHITECTS AND PLANNERS
IN ASSOCIATION WITH:
FLEMING COPPORATION

NO	DESCRIPTION	NAME	DATE

REVISIONS

D.C. DEPARTMENT OF PUBLIC WORKS
BUREAU OF TRANSPORTATION CONSTRUCTION SERVICES
DESIGN AND ENGINEERING DIVISION

I-395 CENTER LEG OF THE INNER LOOP
REHABILITATION OF
THE MALL TUNNEL

PAVEMENT MARKING PLAN

PROJECT ENG. G.M.
DESIGNED BY R.A.
CHECKED BY G.M.
DRAWN BY E.S.
PROJECT MGR. I.B.

DIVISION CHIEF
DATE
FILE 1142

F.H.W.A. REG. NO.	STATE	FED AID PROJECT NO.	SHEET NO.	TOTAL SHEETS
3	D.C.	IR-395-1(150)	53	199

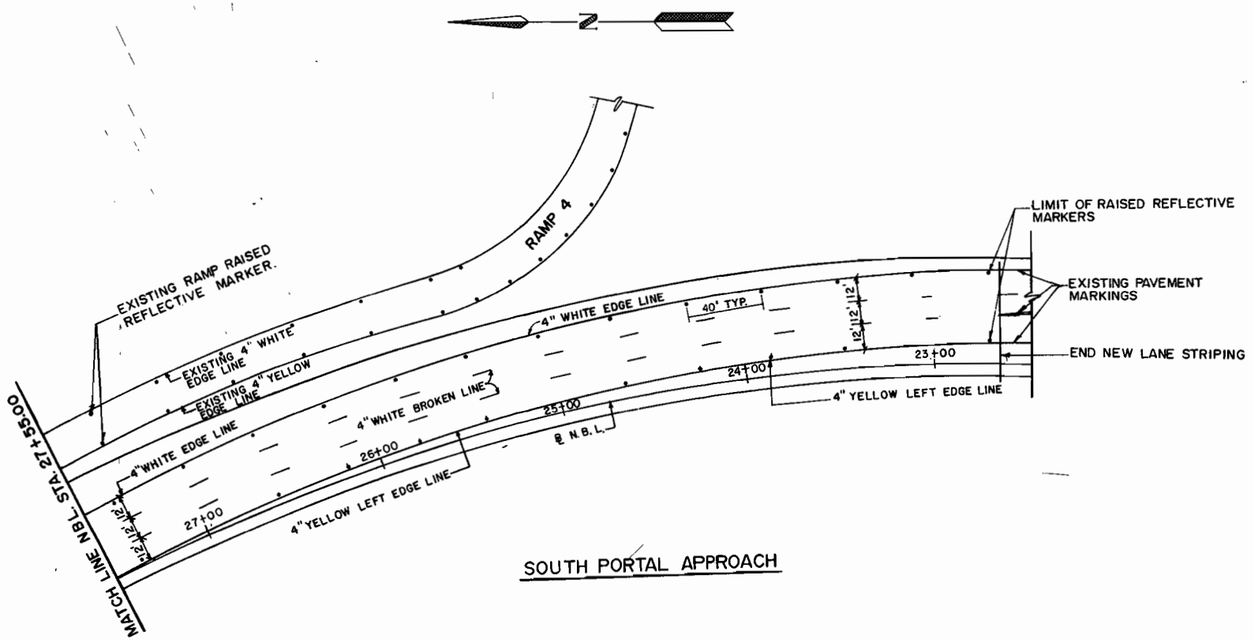

SOUTH PORTAL APPROACH

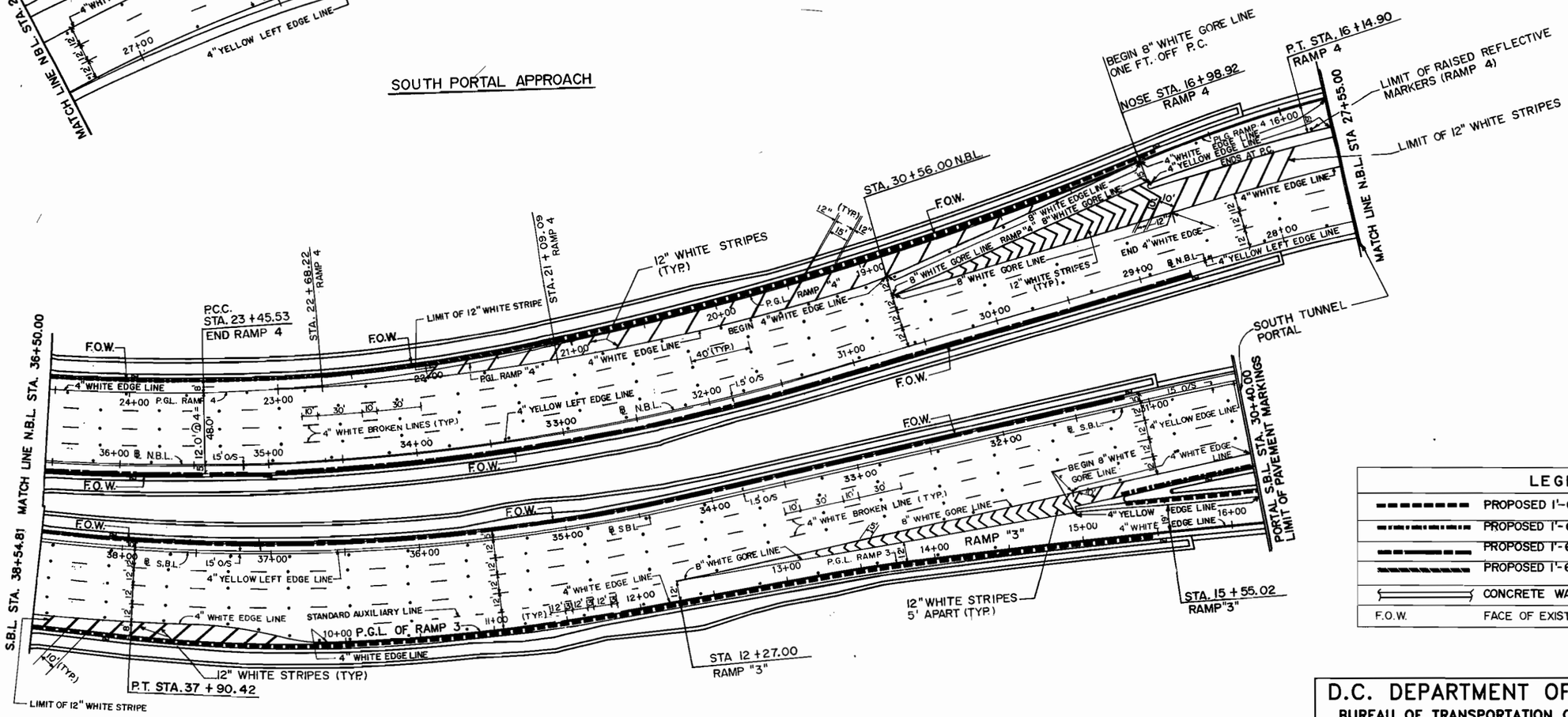

LEGEND	
▬▬▬	PROPOSED 1'-6" CONCRETE BARRIER TYPE-1
▬·▬·▬	PROPOSED 1'-6" CONCRETE BARRIER TYPE-2
▬▬▬	PROPOSED 1'-6" CONCRETE BARRIER TYPE-3
▬▬▬	PROPOSED 1'-6" CONCRETE BARRIER TYPE-4
═══	CONCRETE WALL
F.O.W.	FACE OF EXIST. WALL

SCALE: 1"=40'

TIPPETTS.ABBETT.McCARTHY.STRATTON
ENGINEERS, ARCHITECTS AND PLANNERS
IN ASSOCIATION WITH:
FLEMING CORPORATION

NO	DESCRIPTION	NAME	DATE

REVISIONS

D.C. DEPARTMENT OF PUBLIC WORKS
BUREAU OF TRANSPORTATION CONSTRUCTION SERVICES
DESIGN AND ENGINEERING DIVISION

I-395 CENTER LEG OF THE INNER LOOP
REHABILITATION OF
THE MALL TUNNEL

PAVEMENT MARKING PLAN

PROJECT ENG. G.M.
DESIGNED BY R.A.
CHECKED BY G.M.
DRAWN BY E.S.
PROJECT MGR. I.B.

DIVISION CHIEF
DATE
FILE 1142

REG. NO.	STATE	PROJECT NO.	NO.	SHEETS
3	D.C.	IR-395-1(150)	54	19

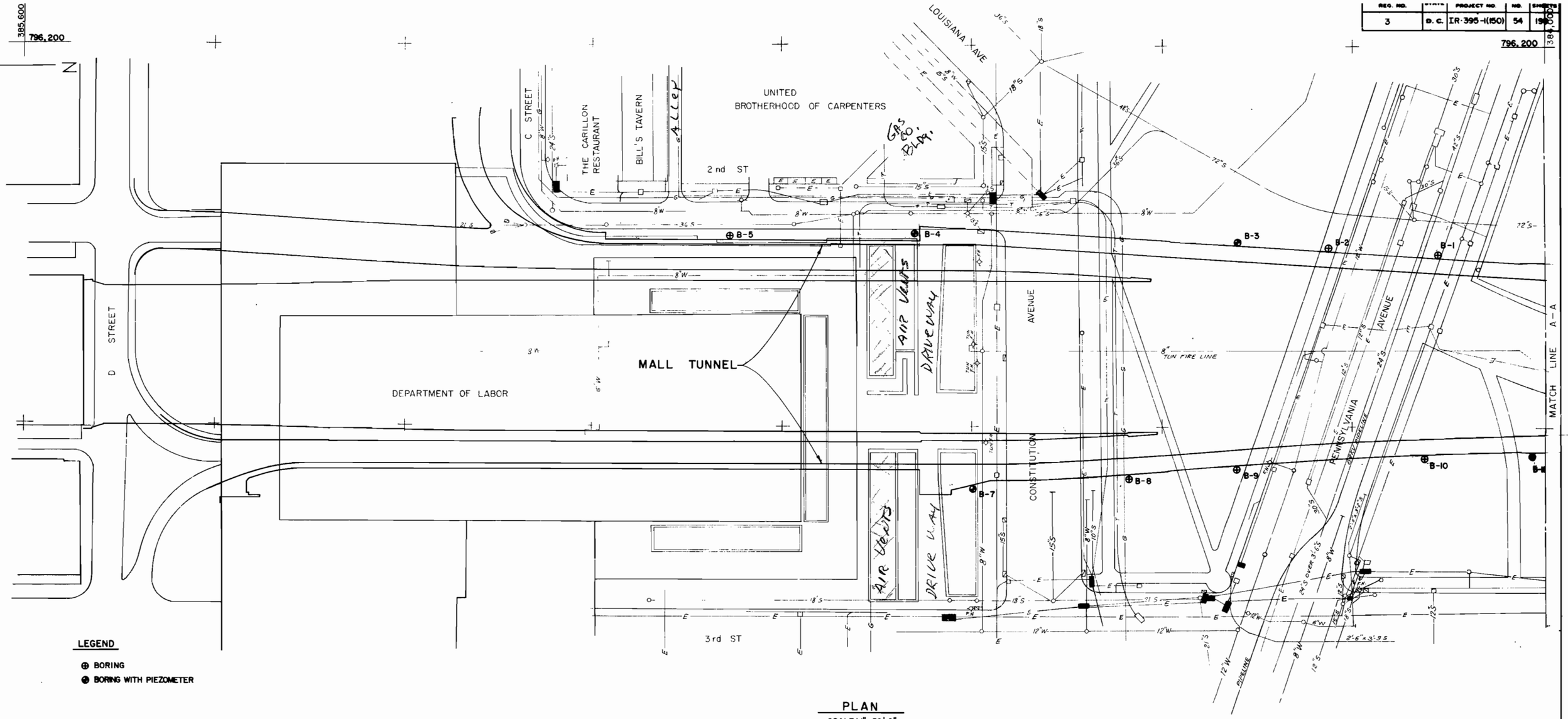

LEGEND

⊕ BORING

⊕ BORING WITH PIEZOMETER

NOTE :

FOR BORING INFORMATION SEE APPENDIX B IN THE SPECIAL PROVISIONS.

PLAN

SCALE: 1" = 50'-0"

D.C. DEPARTMENT OF PUBLIC WORKS
BUREAU OF TRANSPORTATION CONSTRUCTION SERVICES
DESIGN AND ENGINEERING DIVISION

I-395 CENTER LEG OF THE INNER LOOP REHABILITATION OF THE MALL TUNNEL

PROJECT ENG. I.B.
DESIGNED BY B.R.
CHECKED BY T.S.
DRAWN BY B.R.
PROJECT MGR. I.B.

DIVISION CHIEF

DATE

FILE 1142

SHEET 54 OF 100

BORING LOCATIONS

TIPPETTS-ABBETT-McCARTHY-STRATTON
Engineers, Architects and Planners
in association with:
FLEMING CORPORATION

NO.	DESCRIPTION	NAME	DATE

REVISIONS

REV. NO.		PROJECT NO.	NO.	SHEET NO.
	D.C.	IR-395-K(50)	55	159

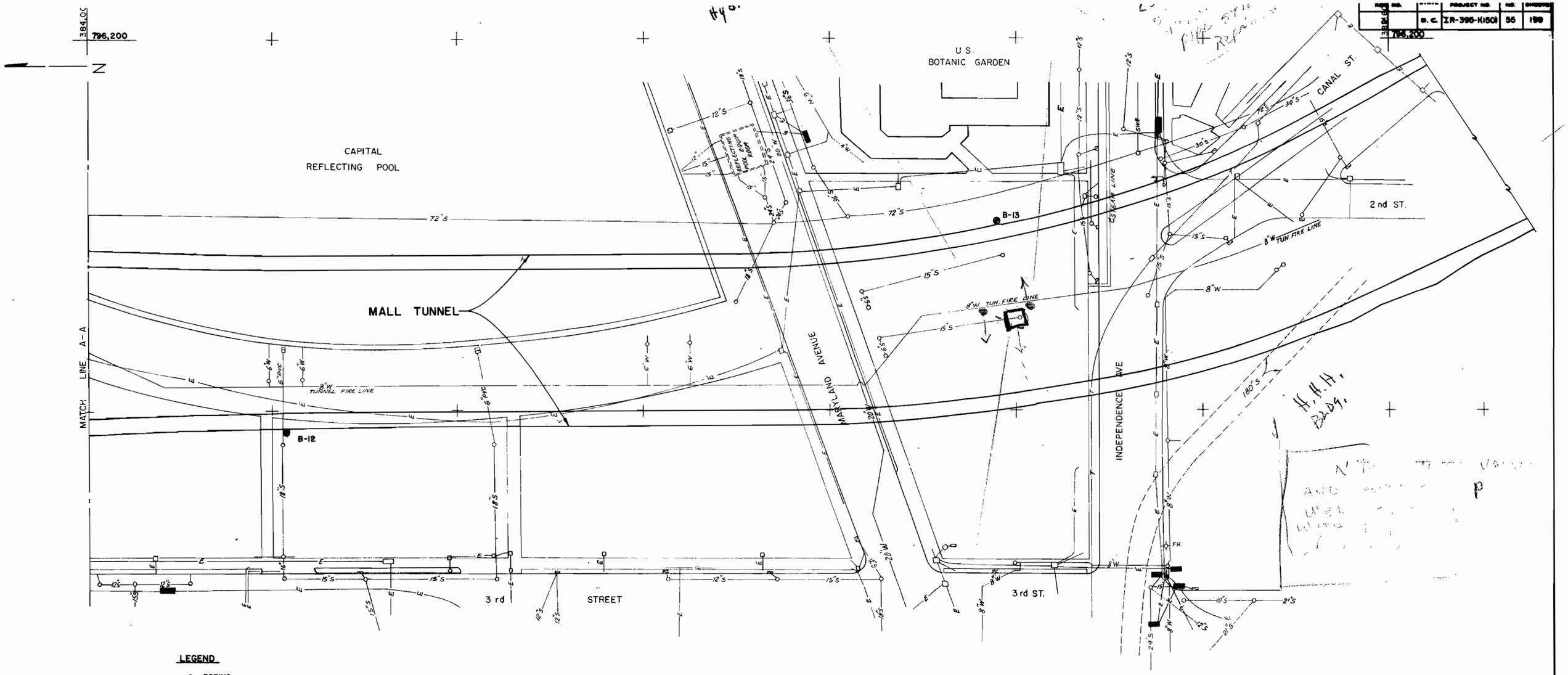

LEGEND

- ⊕ BORING
- ● BORING WITH PIEZOMETER

NOTE:

FOR BORING INFORMATION SEE APPENDIX B IN THE SPECIAL PROVISIONS.

PLAN

SCALE: 1" = 50'-0"

40' Deep
now in middle of Garden
(Botanic Garden fence park)

D.C. DEPARTMENT OF PUBLIC WORKS
BUREAU OF TRANSPORTATION CONSTRUCTION SERVICES
DESIGN AND ENGINEERING DIVISION

I-395 CENTER LEG OF THE INNER LOOP
REHABILITATION OF
THE MALL TUNNEL

PROJECT ENG. I.B.
DESIGNED BY B.R.
CHECKED BY T.S.
DRAWN BY B.R.
PROJECT MGR I.B.

DIVISION CHIEF

DATE

FILE

SHEET 55 OF 159

TIPPETTS-ABBETT-McCARTHY-STRATTON
Engineers, Architects and Planners
in association with:
FLEMING CORPORATION

NO.	DESCRIPTION	NAME	DATE

REVISIONS

BORING LOCATIONS

FAI.H.A. REG. NO.	STATE	FED AID PROJECT NO.	SHEET NO.	TOTAL SHEETS
3	D.C.	IR-395-1(150)	56	199

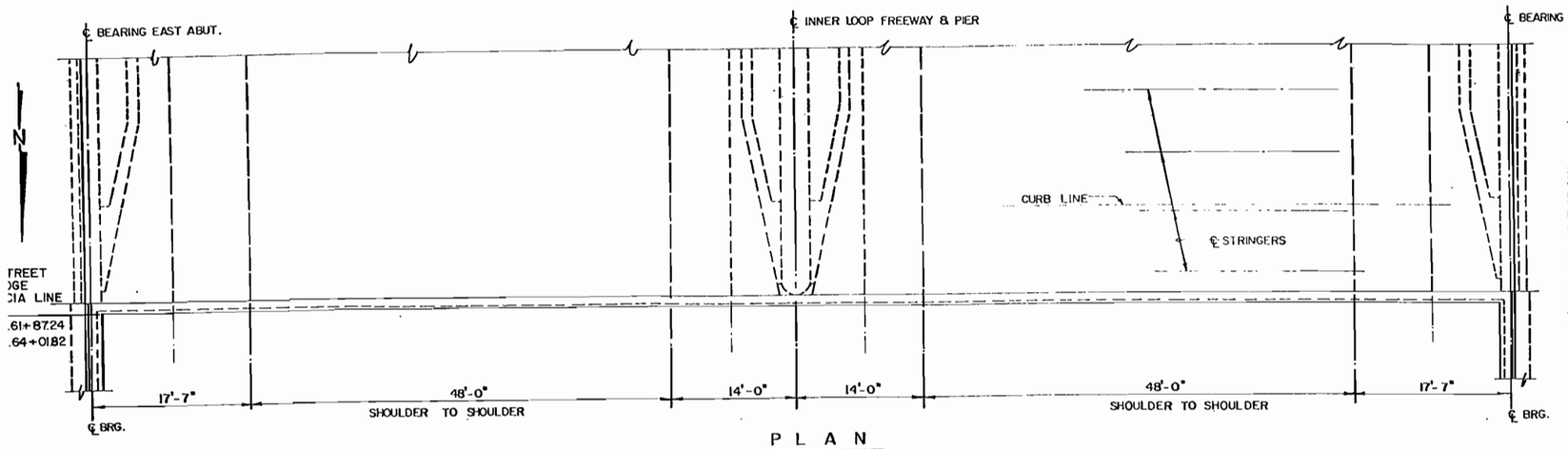

PLAN
SCALE: 1/8" = 1'-0"

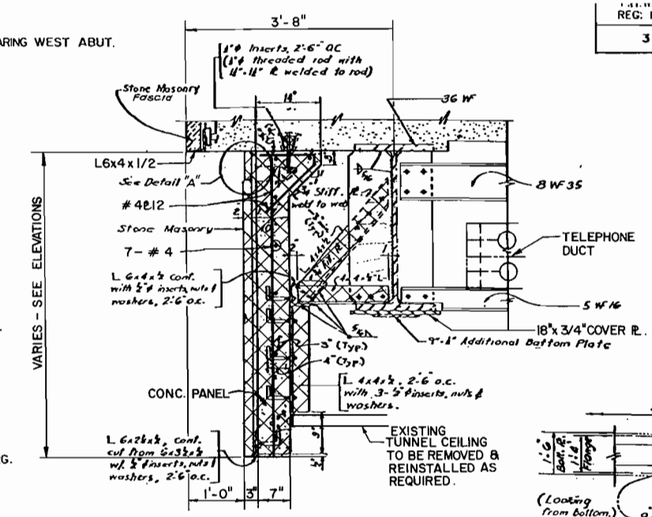

1 SECTION
SCALE: 3/4" = 1'-0"

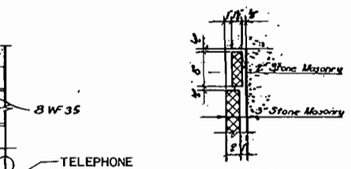

DETAIL "A"
N.T.S.

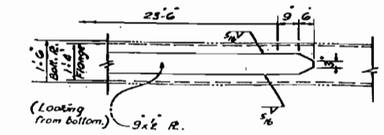

DETAIL "B"
N.T.S.

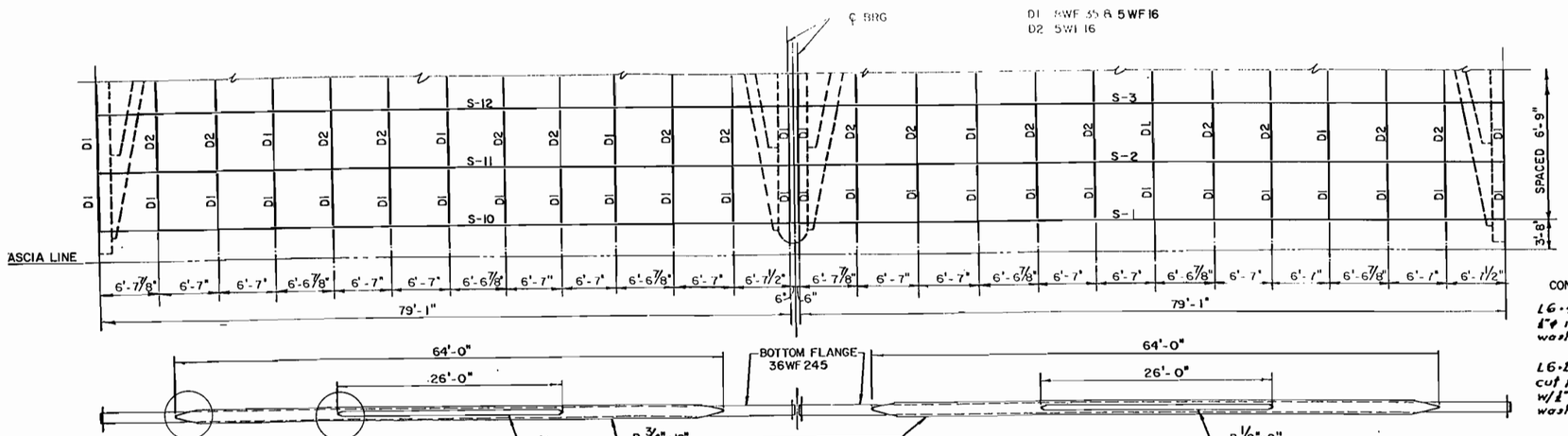

PARTIAL FRAMING PLAN
SCALE: 1/8" = 1'-0"

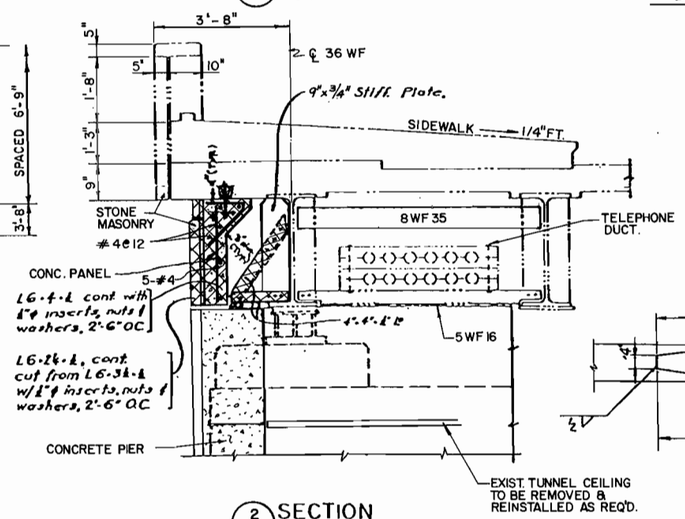

2 SECTION
SCALE: 1/2" = 1'-0"

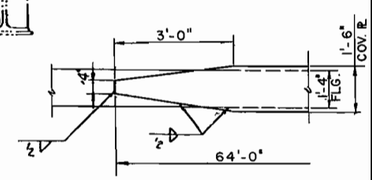

DETAIL "C"
N.T.S.

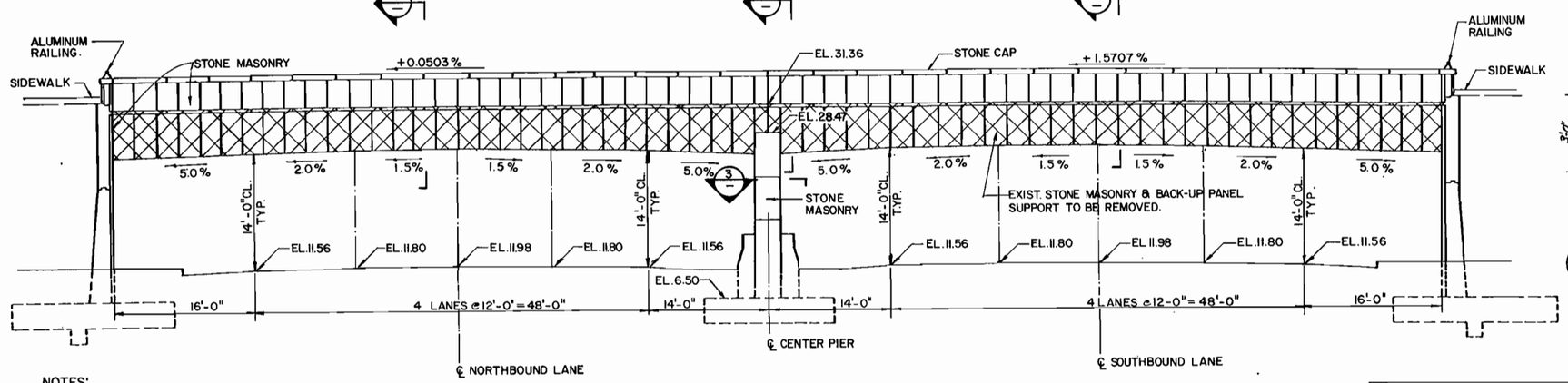

ELEVATION
SCALE: 1/8" = 1'-0"

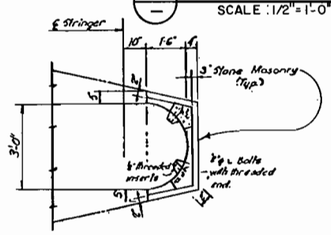

3 SECTION
SCALE: 3/8" = 1'-0"

LEGEND

PORTION OF STRUCTURE TO BE REMOVED

NOTES:

1. EXISTING CONDITIONS SHOWN ARE BASED ON THE ORIGINAL CONTRACT DRAWINGS (PROJ. NO. I-95-1(85)2) PREPARED BY DAVID VOLKERT & ASSOCIATES, AND PROJ. NO. I-95-1(49)2 CONTRACT DRAWINGS PREPARED BY TIPPETTS-ABBETT-McCARTHY-STRATTON.
2. CONTRACTOR IS RESPONSIBLE TO FIELD VERIFY THE EXISTING CONDITIONS SHOWN AND OBSERVE ALL SUBSEQUENT CHANGES PRIOR TO CONDUCTING HIS CONSTRUCTION OPERATION.

TIPPETTS.ABBETT.McCARTHY.STRATTON
ENGINEERS, ARCHITECTS AND PLANNERS
IN ASSOCIATION WITH:
FLEMING CORPORATION

NO	DESCRIPTION	NAME	DATE

REVISIONS

D.C. DEPARTMENT OF PUBLIC WORKS
BUREAU OF TRANSPORTATION CONSTRUCTION SERVICES
DESIGN AND ENGINEERING DIVISION

I-395 CENTER LEG OF THE INNER LOOP REHABILITATION OF
THE MALL TUNNEL

"D" STREET NORTH PORTAL
EXISTING STRUCTURE
DEMOLITION PLAN, SECTIONS AND DETAILS

PROJECT ENG. I. B.
DESIGNED BY T. S.
CHECKED BY I. B.
DRAWN BY B.R.
PROJECT MGR. I. B.
DIVISION
DATE
FILE 1142
SHEET 56 OF 199
DWG. NO. S103

F.H.W.A. REG. NO.	STATE	FED AID PROJECT NO.	SHEET NO.	TOTAL SHEETS
3	D.C.	IR-395-1(150)	57	199

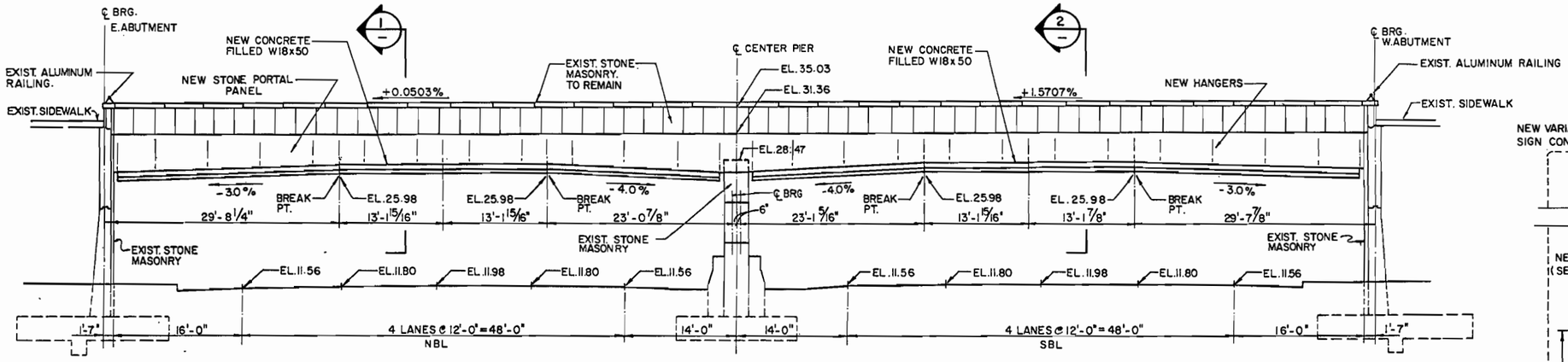

ELEVATION
"D" ST. NORTH PORTAL
SCALE: 1/8" = 1'-0"
LOOKING SOUTH

NOTES: (SECTION 2)

1. SEE CIVIL DRAWINGS FOR LOCATION OF NEW VARIABLE MESSAGE SIGN CONSOLE.
2. COORDINATE WITH VARIABLE MESSAGE SIGN MANUFACTURER FOR THE REQUIRED LENGTH OF NEW L 6x6x1/2.
3. PROVIDE BOLT HOLES IN FLANGE OF NEW L 6x6x1/2 FOR NEW VARIABLE MESSAGE SIGN CONSOLE ATTACHEMENT. (COORDINATE WITH SIGN MANUFACTURER FOR SIZE, SPACING AND LOCATION OF BOLTS REQUIRED.)

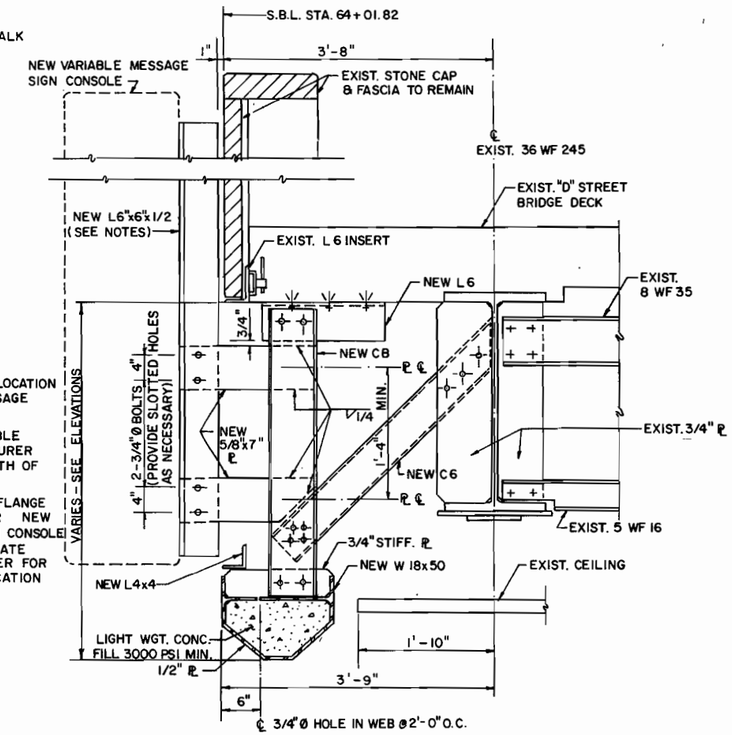

SECTION 2 @ VARIABLE MESSAGE SIGN CONSOLE ONLY
SCALE: 1" = 1'-0"

NOTE: FOR NEW STONE PANEL AND BACK-UP CMU WALL CONSTRUCTION, SEE DWG. C-132.

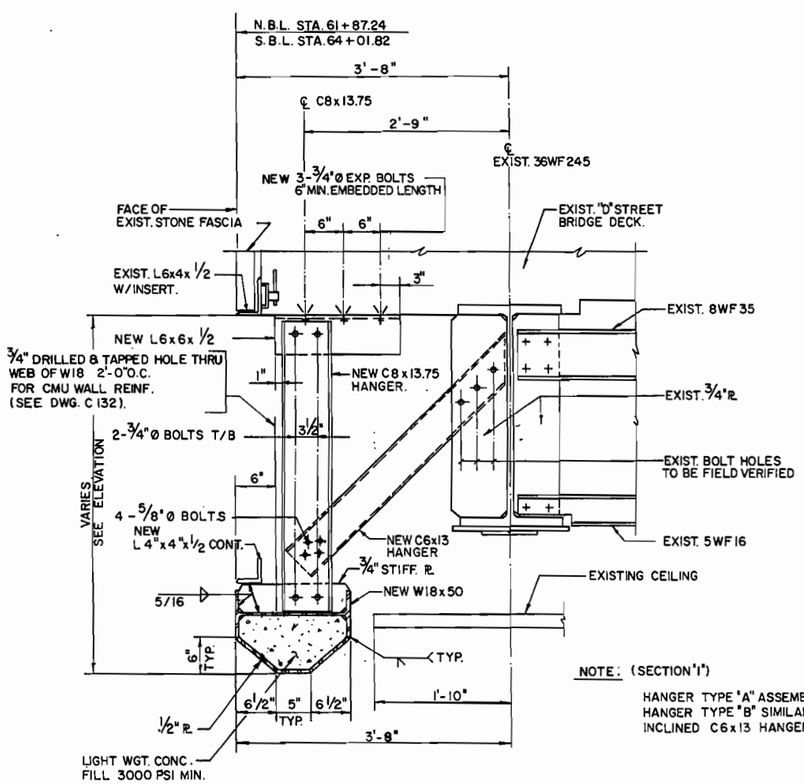

SECTION 1 TYPICAL FOR N.B.L. & S.B.L.
SCALE: 1" = 1'-0"

NOTE: (SECTION "1")
HANGER TYPE "A" ASSEMBLY SHOWN. HANGER TYPE "B" SIMILAR EXCEPT INCLINED C6x13 HANGER NOT REQUIRED.

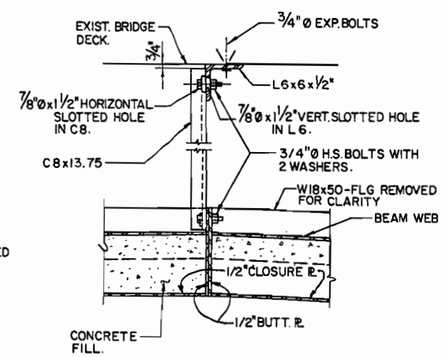

ELEVATION
HANGER TYPE "B" @ BUTT. PL
SCALE: 1" = 1'-0"

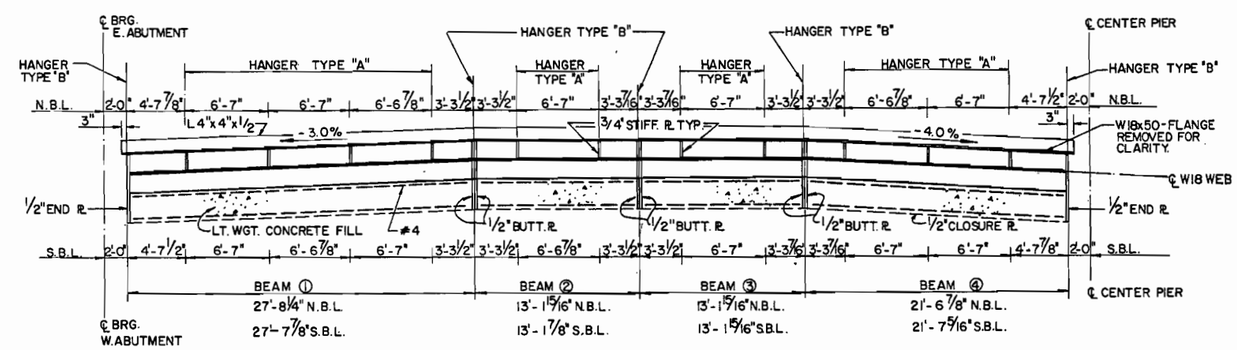

ELEVATION: CONCRETE-FILLED BEAM
N.T.S.
N.B.L. LOOKING SOUTH
S.B.L. LOOKING NORTH

TIPPETTS.ABBETT.McCARTHY.STRATTON
ENGINEERS, ARCHITECTS AND PLANNERS
IN ASSOCIATION WITH:

NO	DESCRIPTION	NAME	DATE

D.C. DEPARTMENT OF PUBLIC WORKS
BUREAU OF TRANSPORTATION CONSTRUCTION SERVICES
DESIGN AND ENGINEERING DIVISION

I-395 CENTER LEG OF THE INNER LOOP REHABILITATION OF
THE MALL TUNNEL

"D" STREET NORTH PORTAL
NEW STRUCTURAL DETAILS

PROJECT ENG. I.B.
DESIGNED BY T.S.
CHECKED BY I.B.
DRAWN BY B.R.
PROJECT MGR. I.B.

DIVISION CHIEF
DATE
FILE 1142

F.H.W.A. REG. NO.	STATE	FED AID PROJECT NO.	SHEET NO.	TOTAL SHEETS
3	D.C.	IR-395-1(150)	58	199

N.B.L. – RAMP "I" – RAMP "J" – F.A. & EXH. DUCTS

EXP. JT. STA.	LOCATION	(REPAIR) TYPE & LENGTH OF LEAKS			
		ROOF (1)	WALL (2)	WALL–FLOOR (3)	FLOOR (4)
–	–	–	–	–	–

S.B.L. – RAMP "G" – RAMP "H" – F.A. & EXH. DUCTS

EXP. JT. STA.	LOCATION	(REPAIR) TYPE & LENGTH OF LEAKS			
		ROOF (1)	WALL (2)	WALL–FLOOR (3)	FLOOR (4)
–	–	–	–	–	–

NOTES:

FOR EXISTING TUNNEL CONSTRUCTION,
SEE AS-BUILT DRAWINGS:
FEDERAL PROJECT NO. I-95-1(65)2.

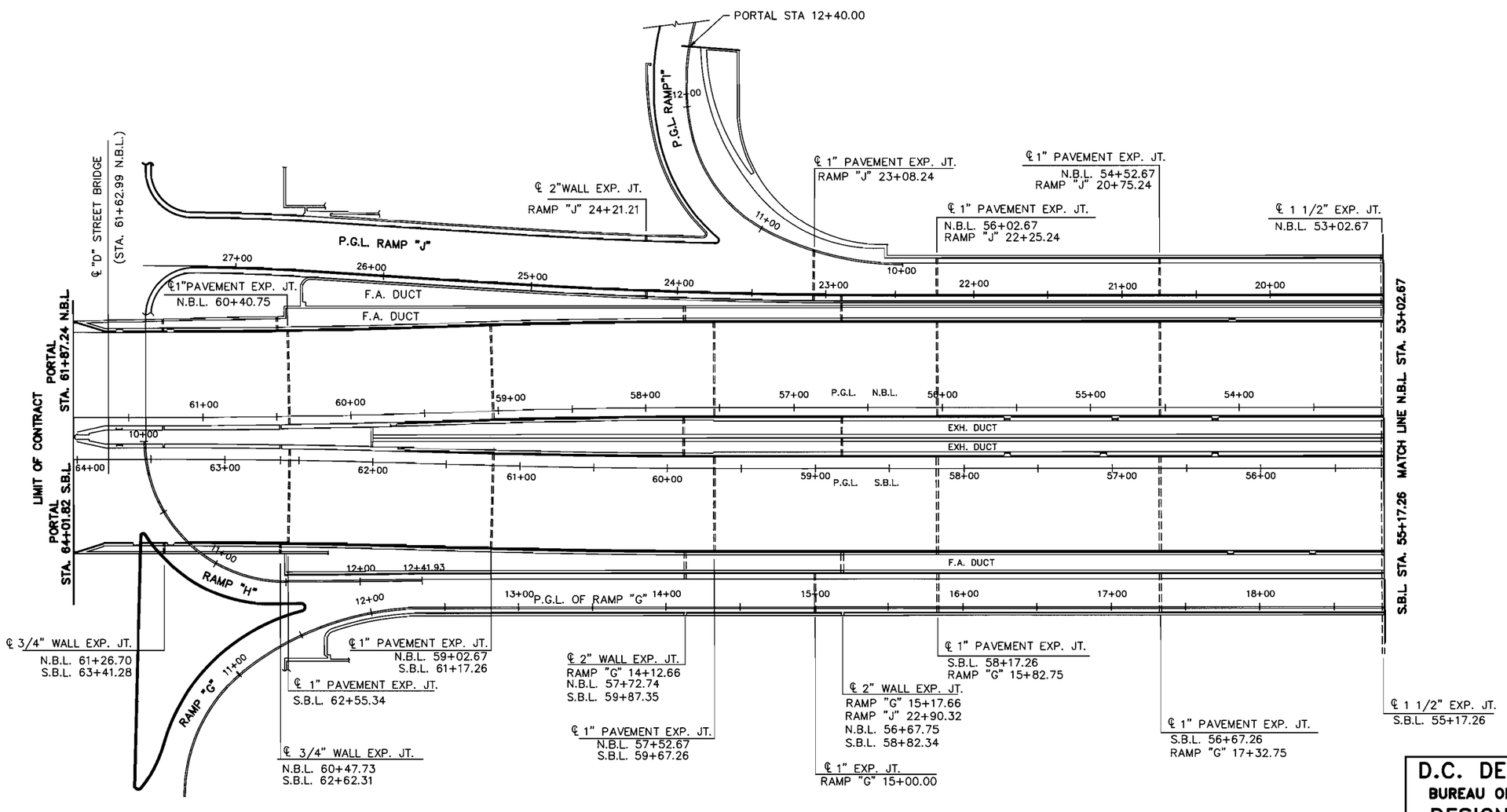

PLAN

SCALE 40 0 40 80 FEET

TIPPETTS.ABBETT.McCARTHY.STRATTON
- 'EERS, ARCHITECTS AND PLANNERS
IN ASSOCIATION WITH:

NO	DESCRIPTION	NAME	DATE

D.C. DEPARTMENT OF PUBLIC WORKS
BUREAU OF TRANSPORTATION CONSTRUCTION SERVICES
DESIGN AND ENGINEERING DIVISION

I-395 CENTER LEG OF THE INNER LOOP
REHABILITATION OF
THE MALL TUNNEL

TUNNEL WATER LEAKAGE REPAIRS
STA. 61+87.24 TO STA. 53+02.67 N.B.L.
STA. 64+01.82 TO STA. 55+17.26 S.B.L.

PROJECT ENG. I.B
DESIGNED BY T.S
CHECKED BY I.B
DRAWN BY M.Z
PROJECT MGR. I.B

DIVISION CHIEF
DATE
FILE 1142

F.H.W.A. REG. NO.	STATE	FED AID PROJECT NO.	SHEET NO.	TOTAL SHEETS
3	D.C.	IR-395-1(150)	59	199

N.B.L. – RAMP "J" – F.A. & EXH. DUCTS

EXP. JT. STA.	LOCATION	(REPAIR) TYPE & LENGTH OF LEAKS			
		ROOF (1)	WALL (2)	WALL–FLOOR (3)	FLOOR (4)
53+02.67	RAMP "J" F.A. DUCT			3'	
52+50.15	RAMP "J" F.A. DUCT			3'	
49+71.00	N.B.L.				30'
49+71.00	N.B.L. F.A. DUCT		25'		
48+75.00	N.B.L. F.A. DUCT	3'	25'		

S.B.L. – RAMP "G" – F.A. & EXH. DUCTS

EXP. JT. STA.	LOCATION	(REPAIR) TYPE & LENGTH OF LEAKS			
		ROOF (1)	WALL (2)	WALL–FLOOR (3)	FLOOR (4)
55+17.26	S.B.L. EXH. DUCT				6'
55+17.26	RAMP "G"				3'
53+72.86	RAMP "G" F.A. DUCT				3'
52+99.36	S.B.L. EXH. DUCT				3'
52+57.51	S.B.L. EXH. DUCT				3'
51+85.59	RAMP "G" F.A. DUCT	3'	25'		
51+85.59	S.B.L. EXH. DUCT	3'			3'
50+89.59	RAMP "G" F.A. DUCT	3'	25'		
49+89.09	S.B.L. F.A. DUCT			6'	
48+74.65	S.B.L. F.A. DUCT		25'	6'	3'

NOTES:

1. FOR EXISTING TUNNEL CONSTRUCTION, SEE AS-BUILT DRAWINGS: FEDERAL PROJECT NO. I-95-1(62)2.
2. FOR TYPICAL TUNNEL CROSS SECTIONS, SEE DWG. S110.
3. FOR LEAK REPAIR DETAILS, SEE DWG. S111.

LEGEND

LEAK AREA

(X) "X" DENOTES THE LOCATION OF LEAK AND TYPE OF REPAIR REQUIRED AS FOLLOWS:

1 – ROOF LEAK

2 – WALL LEAK

3 – WALL/FLOOR LEAK

4 – FLOOR LEAK

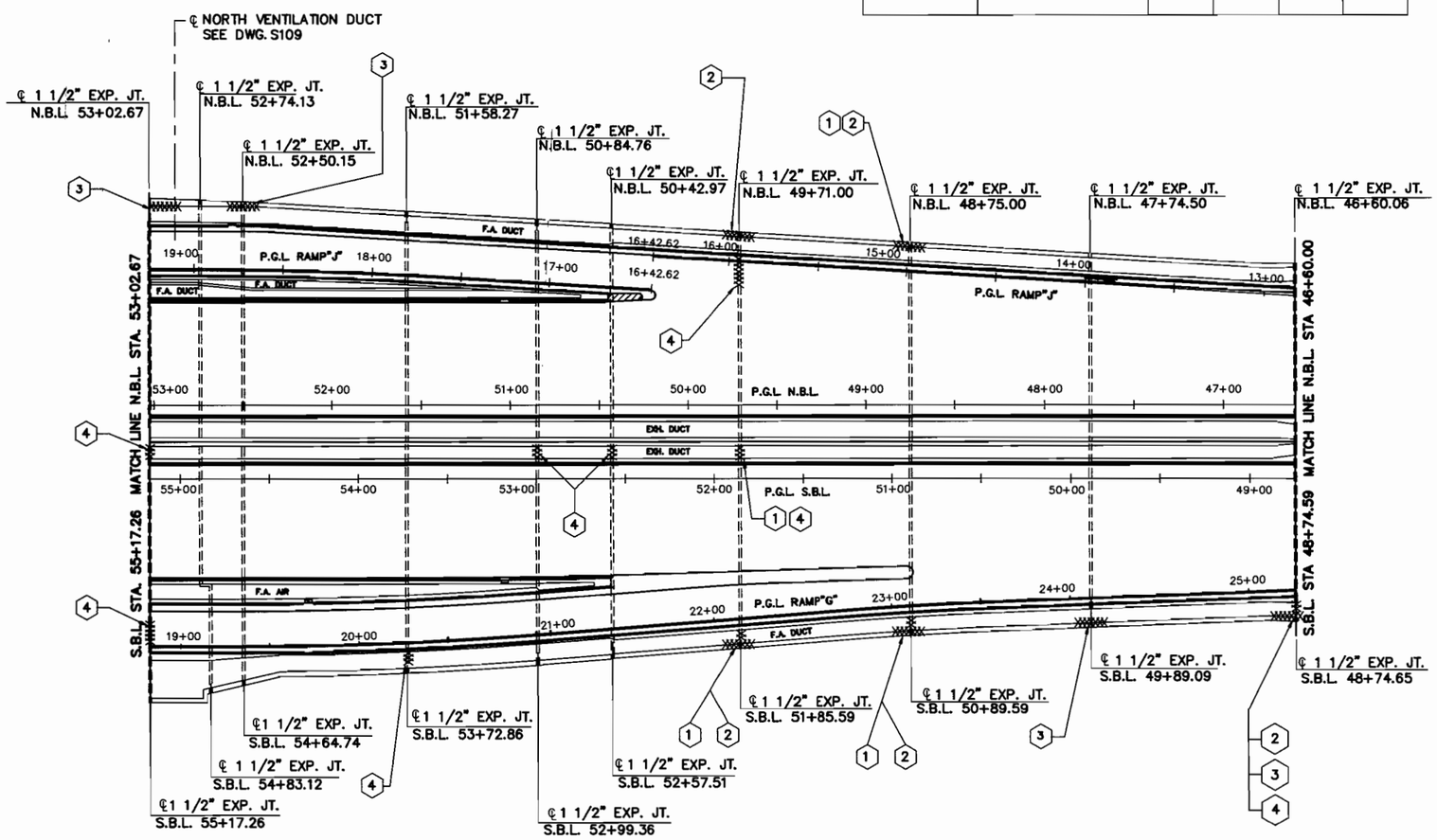

PLAN

SCALE 40 0 40 80 FEET

TIPPETTS.ABBETT.McCARTHY.STRATTON
ENGINEERS, ARCHITECTS AND PLANNERS
IN ASSOCIATION WITH:

NO	DESCRIPTION	NAME	DATE

D.C. DEPARTMENT OF PUBLIC WORKS
BUREAU OF TRANSPORTATION CONSTRUCTION SERVICES
DESIGN AND ENGINEERING DIVISION

I-395 CENTER LEG OF THE INNER LOOP
REHABILITATION OF
THE MALL TUNNEL

TUNNEL WATER LEAKAGE REPAIRS
STA. 53+02.67 TO STA. 46+60.00 N.B.L.
STA. 55+17.26 TO STA. 48+74.59 S.B.L.

PROJECT ENG. N.M.
DESIGNED BY T.S.
CHECKED BY I.B
DRAWN BY M.Z.
PROJECT MGR. I.B

DIVISION CHIEF
DATE
FILE 1142

F.H.W.A. REG. NO.	STATE	FED AID PROJECT NO.	SHEET NO.	TOTAL SHEETS
3	D.C.	IR-395-1(150)	60	199

N.B.L. – F.A. & EXH. DUCTS

EXP. JT. STA.	LOCATION	(REPAIR) TYPE & LENGTH OF LEAKS			
		ROOF (1)	WALL (2)	WALL–FLOOR (3)	FLOOR (4)
45+83.67	N.B.L. F.A. DUCT	3'		3'	
45+83.67	N.B.L. F.A. DUCT		3'		

S.B.L. – F.A. & EXH. DUCTS

EXP. JT. STA.	LOCATION	(REPAIR) TYPE & LENGTH OF LEAKS			
		ROOF (1)	WALL (2)	WALL–FLOOR (3)	FLOOR (4)
47+95.65	S.B.L. F.A. DUCT		19'		
47+95.65	S.B.L. EXH. DUCT			3'	
46+45.65	S.B.L. F.A. DUCT			6'	
44+95.65	S.B.L. EXH. DUCT	7'			
43+45.65	S.B.L. EXH. DUCT	3'			3'
40+45.65	S.B.L. EXH. DUCT	3'			
40+45.65	S.B.L. F.A. DUCT	3'			
38+54.81	S.B.L. EXH. DUCT	3'			

N

NOTES:

1. FOR EXISTING TUNNEL CONSTRUCTION, SEE AS–BUILT DRAWINGS: FEDERAL PROJECT NO. I–95–1(53)2.
2. FOR TYPICAL TUNNEL CROSS SECTIONS, SEE DWG. S110.
3. FOR LEAK REPAIR DETAILS, SEE DWG. S111.

LEGEND

LEAK AREA

(X) "X" DENOTES THE LOCATION OF LEAK AND TYPE OF REPAIR REQUIRED AS FOLLOWS:

1 – ROOF LEAK

2 – WALL LEAK

3 – WALL/FLOOR LEAK

4 – FLOOR LEAK

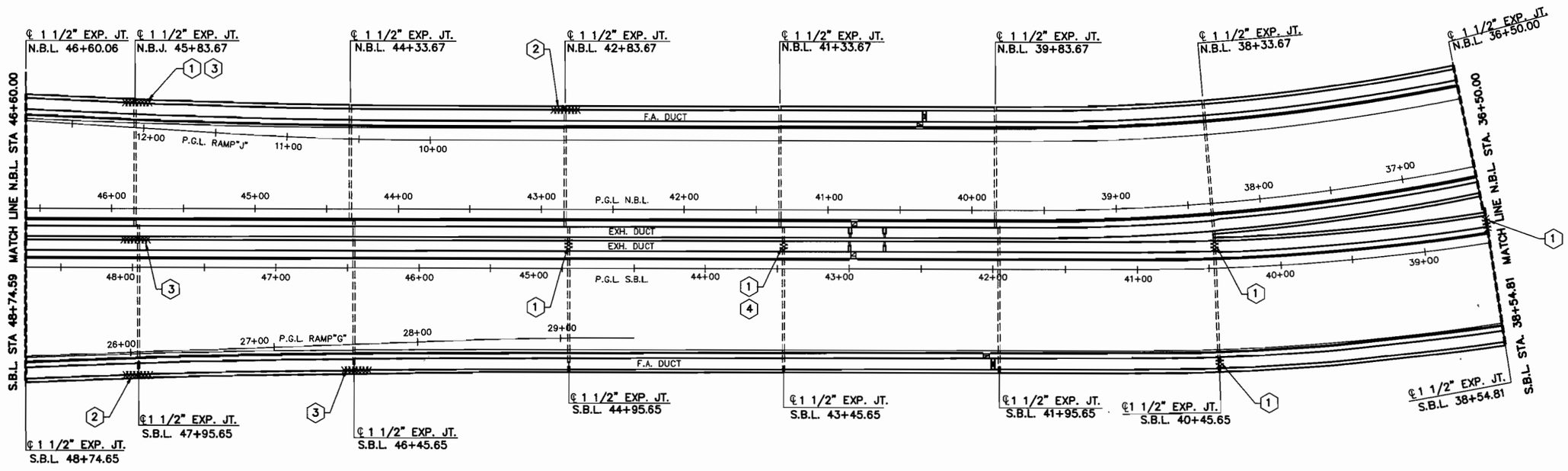

PLAN

SCALE 40 0 40 80 FEET

NO	DESCRIPTION	NAME	DATE

TIPPETTS.ABBETT.McCARTHY.STRATTON
ENGINEERS, ARCHITECTS AND PLANNERS
IN ASSOCIATION WITH:

D.C. DEPARTMENT OF PUBLIC WORKS
BUREAU OF TRANSPORTATION CONSTRUCTION SERVICES
DESIGN AND ENGINEERING DIVISION

I–395 CENTER LEG OF THE INNER LOOP
REHABILITATION OF
THE MALL TUNNEL

TUNNEL WATER LEAKAGE REPAIRS
STA. 46+60.00 TO STA. 36+50.00 N.B.L.
STA. 48+74.59 TO STA. 38+54.81 S.B.L.

PROJECT ENG. I.B.
DESIGNED BY T.S.
CHECKED BY I.B.
DRAWN BY M.Z.
PROJECT MGR. I.B.

DIVISION CHIEF
DATE
FILE 1142

F.H.W.A. REG. NO.	STATE	FED AID PROJECT NO.	SHEET NO.	TOTAL SHEETS
3	D.C.	IR-395-1(150)	61	199

S.B.L. – F.A. & EXH. DUCTS

EXP. JT. STA.	LOCATION	(REPAIR) TYPE & LENGTH OF LEAKS			
		ROOF (1)	WALL (2)	WALL-FLOOR (3)	FLOOR (4)
37+64.76	S.B.L. EXH. DUCT	3'			
36+19.53	S.B.L. EXH. DUCT	3'			

N.B.L. – F.A. & EXH. DUCTS

EXP. JT. STA.	LOCATION	(REPAIR) TYPE & LENGTH OF LEAKS			
		ROOF (1)	WALL (2)	WALL-FLOOR (3)	FLOOR (4)
35+49.19	N.B.L.				35'
33+60.75	N.B.L. F.A. DUCT	3'			
32+70.54	N.B.L. F.A. DUCT			3'	
32+36.32	N.B.L. F.A. DUCT			3'	
30+07.87	N.B.L.		3'		
29+08.87	N.B.L.	6'			
28+ 48.29	N.B.L.	3'			

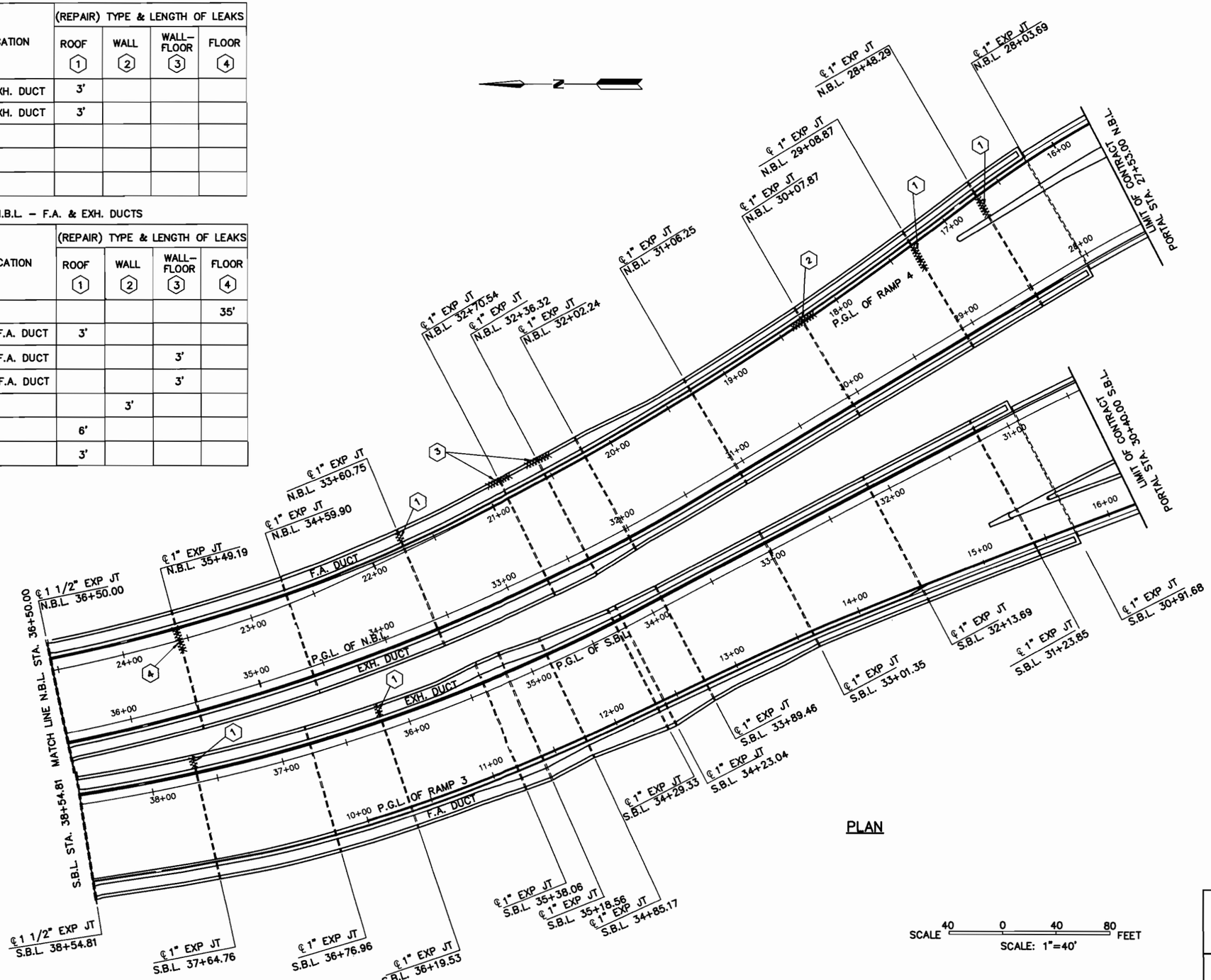

PLAN

SCALE 40 0 40 80 FEET

SCALE: 1"=40'

NOTES:

1. FOR EXISTING TUNNEL CONSTRUCTION, SEE AS-BUILT DRAWINGS: FEDERAL PROJECT NO. I-95-1(70)2.
2. FOR TYPICAL TUNNEL CROSS SECTIONS, SEE DWG. S110.
3. FOR LEAK REPAIR DETAILS, SEE DWG. S111.

LEGEND

LEAK AREA

(X) "X" DENOTES THE LOCATION OF LEAK AND TYPE OF REPAIR REQUIRED AS FOLLOWS:

1 – ROOF LEAK

2 – WALL LEAK

3 – WALL/FLOOR LEAK

4 – FLOOR LEAK

TIPPETTS.ABBETT.McCARTHY.STRATTON
ENGINEERS, ARCHITECTS AND PLANNERS
IN ASSOCIATION WITH:

NO	DESCRIPTION	NAME	DATE

D.C. DEPARTMENT OF PUBLIC WORKS
BUREAU OF TRANSPORTATION CONSTRUCTION SERVICES
DESIGN AND ENGINEERING DIVISION

I-395 CENTER LEG OF THE INNER LOOP
REHABILITATION OF
THE MALL TUNNEL

TUNNEL WATER LEAKAGE REPAIRS
STA. 36+50.00 TO 27+53.00 N.B.L.

PROJECT ENG. I.B.
DESIGNED BY T.S
CHECKED BY I.B.
DRAWN BY M.Z.
PROJECT MGR. I.B.

DIVISION CHIEF
DATE
FILE 1142

F.H.W.A. REG. NO.	STATE	FED AID PROJECT NO.	SHEET NO.	TOTAL SHEETS
3	D.C.	IR-395-1(150)	62	199

G.S.A. WATER PROBLEM ABOUT 15

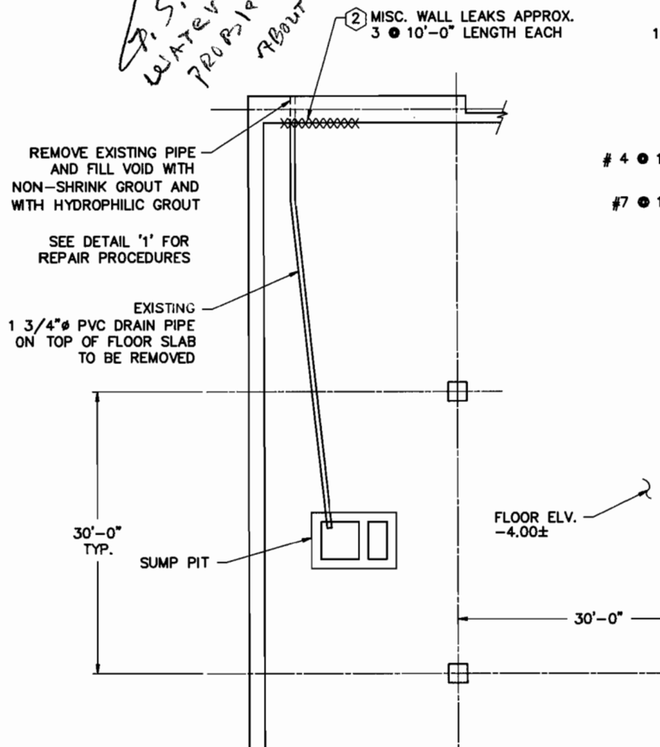

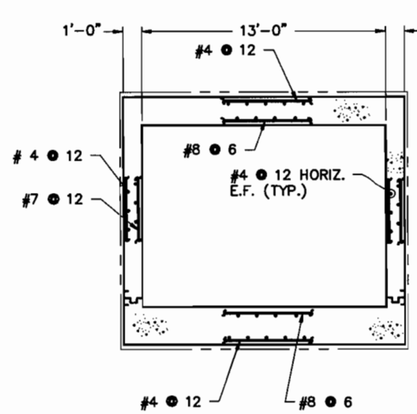

SECTION (A)
1/4" = 1'-0"

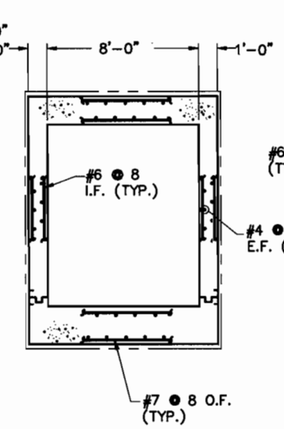

SECTION (B)
1/4" = 1'-0"

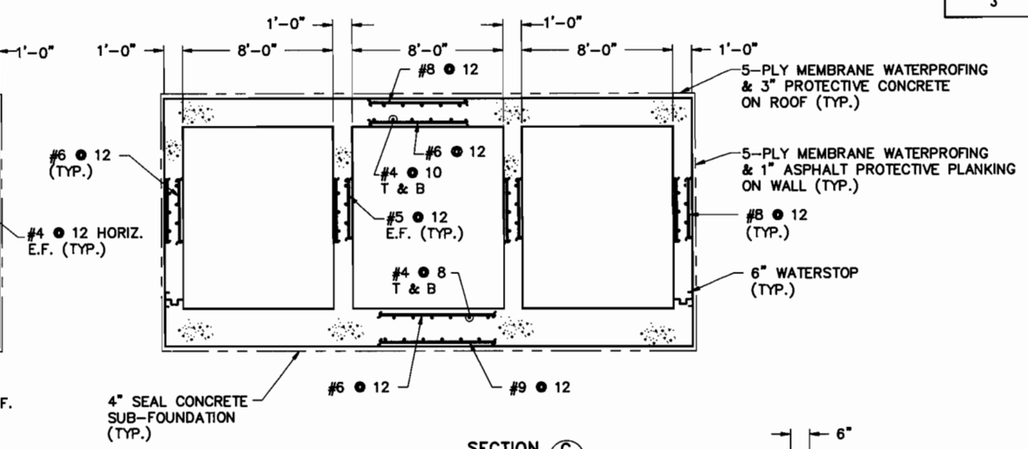

SECTION (C)
1/4" = 1'-0"

TYPICAL CROSS SECTIONS OF EXISTING VENTILATION DUCTS
SHOWN FOR REFERENCE ONLY

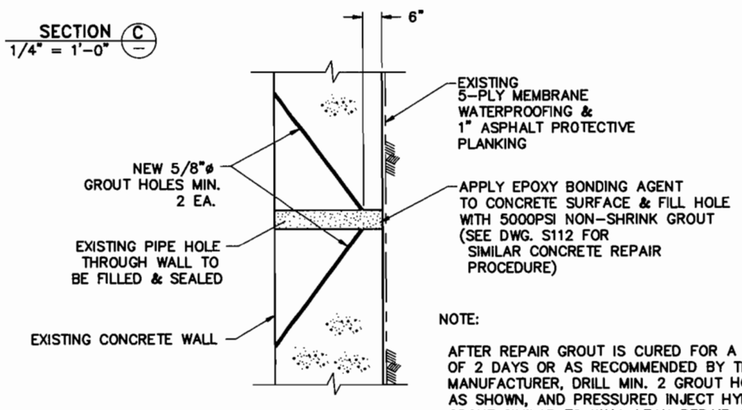

DETAIL (1)

NOTE:

AFTER REPAIR GROUT IS CURED FOR A MIN. OF 2 DAYS OR AS RECOMMENDED BY THE MANUFACTURER, DRILL MIN. 2 GROUT HOLES AS SHOWN, AND PRESSURED INJECT HYDROPHILIC GROUT SIMILAR TO WALL LEAK REPAIR (TYPE "4") PROCEDURE SHOWN ON DWG. S111 TO INSURE WATERTIGHTNESS.

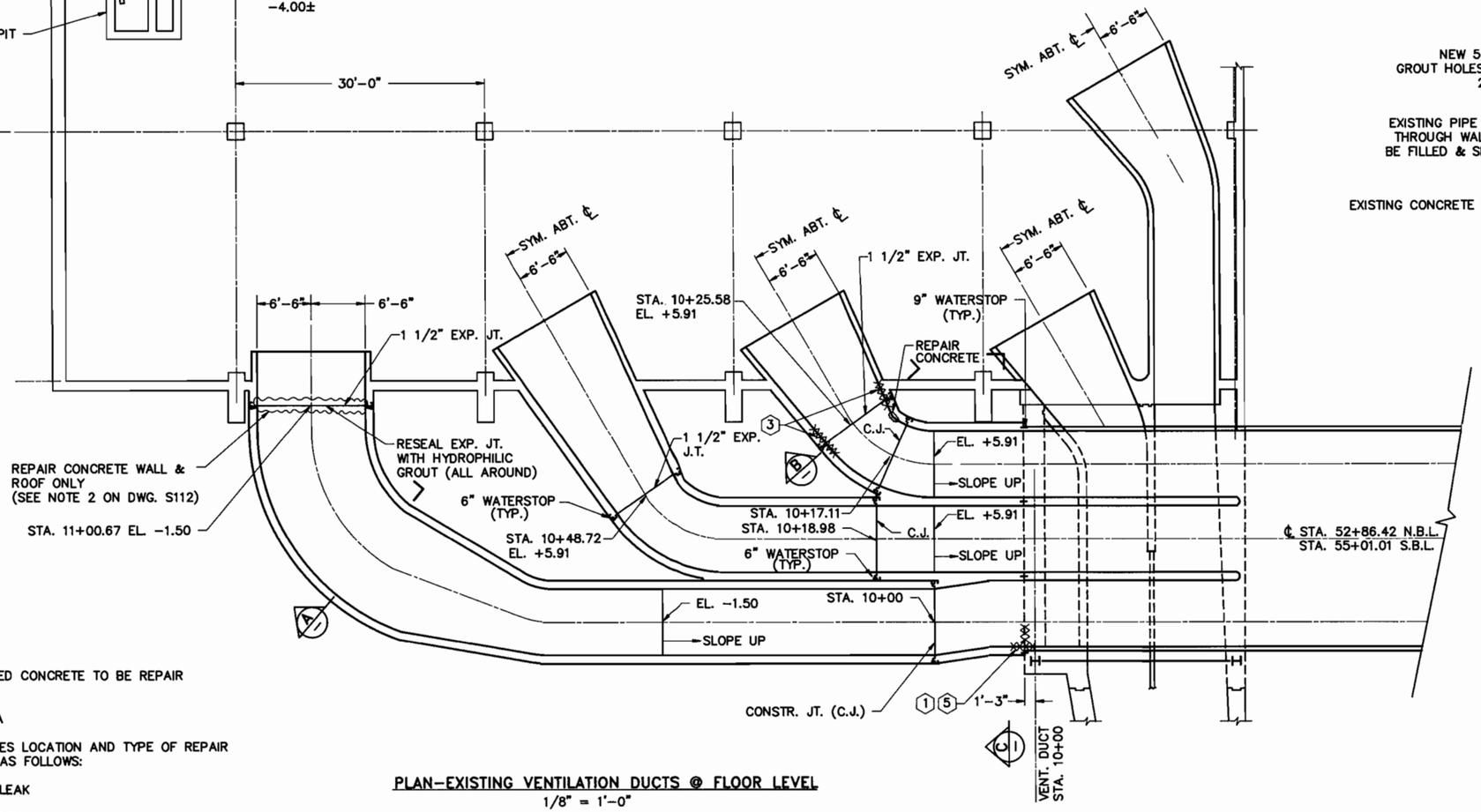

PLAN-EXISTING VENTILATION DUCTS @ FLOOR LEVEL
1/8" = 1'-0"

NOTES:

1. SEE DWG. S111 FOR LEAK REPAIR PROCEDURE AND DETAILS.
2. PROCEDURE OF LEAK REPAIR TYPE "5" IS SIMILAR TO LEAK REPAIR TYPE "4" SHOWN ON DWG. S111.
3. SEE DWG. S112 FOR CONCRETE REPAIR PROCEDURE AND DETAILS.

LEGEND

DETERIOATED CONCRETE TO BE REPAIR

LEAK AREA

"X" DENOTES LOCATION AND TYPE OF REPAIR REQUIRED AS FOLLOWS:

1 : ROOF LEAK

2 : WALL LEAK

3 : WALL/FLOOR LEAK

4 : WALL/ROOF LEAK

TIPPETTS.ABBETT.McCARTHY.STRATTON
ENGINEERS, ARCHITECTS AND PLANNERS
IN ASSOCIATION WITH:

NO	DESCRIPTION	NAME	DATE

D.C. DEPARTMENT OF PUBLIC WORKS
BUREAU OF TRANSPORTATION CONSTRUCTION SERVICES
DESIGN AND ENGINEERING DIVISION

I-395 CENTER LEG OF THE INNER LOOP
REHABILITATION OF
THE MALL TUNNEL

NORTH VENTILATION DUCTS
MISCELLANEOUS REPAIRS

PROJECT ENG. IB
DESIGNED BY TS
CHECKED BY IB
DRAWN BY FK
PROJECT MGR. IB

DIVISION CHIEF
DATE
FILE 1142

F.H.W.A. REG. NO.	STATE	FED AID PROJECT NO.	SHEET NO.	TOTAL SHEETS
3	D.C.	IR-395-1(150)	63	199

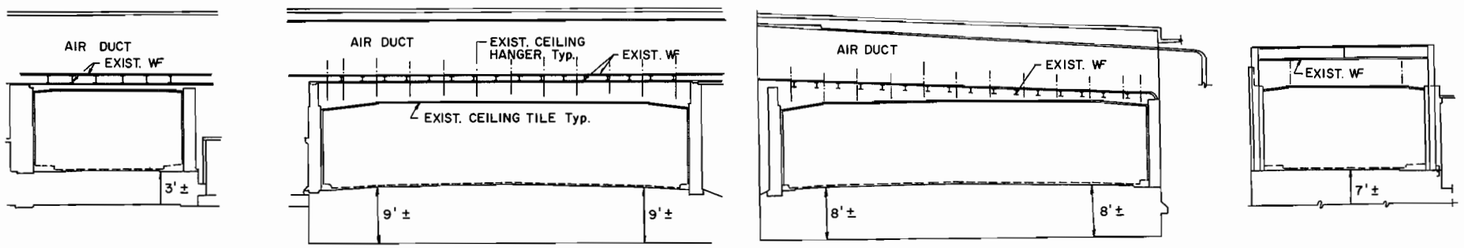

TYPICAL SECTION: STA. 53+02.67 TO STA. 52+74.13 N.B.L.
N.T.S. STA. 55+17.26 TO STA. 54+88.72 S.B.L.

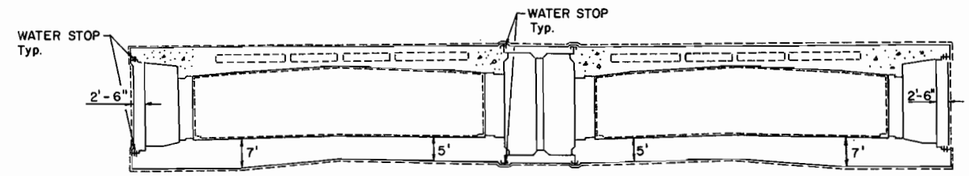

TYPICAL SECTION: STA. 46+60.06 TO STA. 36+50.00 N.B.L.
N.T.S. STA. 48+74.59 TO STA. 38+54.81 S.B.L. (OPP.)

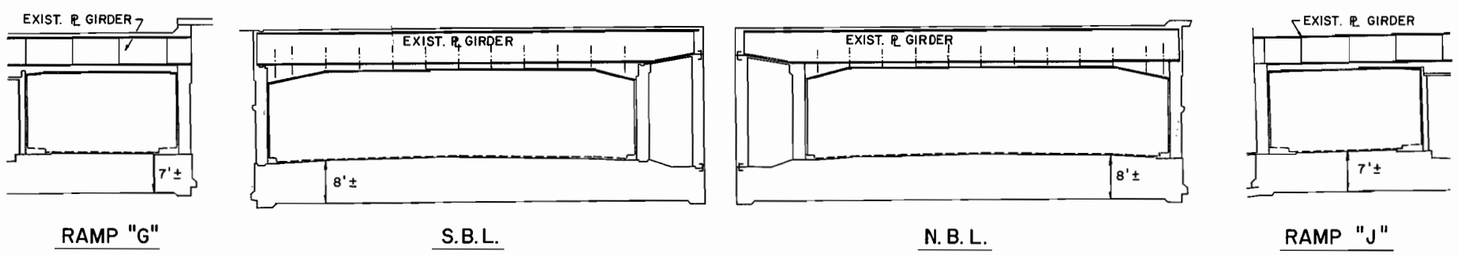

TYPICAL SECTION: STA. 52+74.13 TO STA. 50+42.91 N.B.L.
N.T.S. STA. 54+83.12 TO STA. 52+57.51 S.B.L.

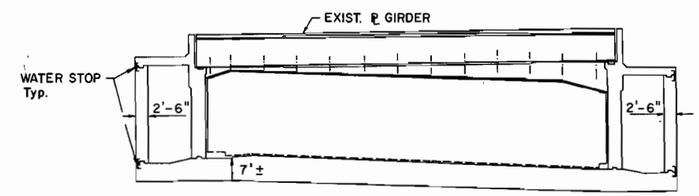

TYPICAL SECTION: STA. 36+50.00 TO STA. 32+36.32 N.B.L.
N.T.S. STA. 38+54.81 TO STA. 35+67.37 S.B.L. (OPP.)

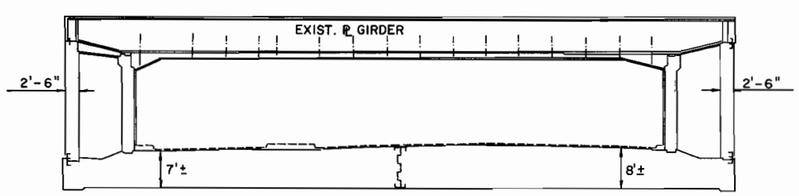

TYPICAL SECTION: STA. 50+40.97 TO STA. 46+60.06 N.B.L.–
N.T.S. STA. 52+57.51 TO STA. 48+74.65 S.B.L. (OPP.)

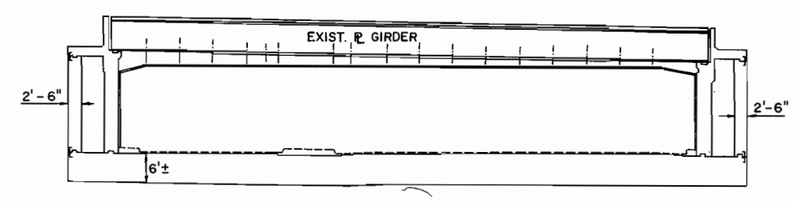

TYPICAL SECTION: STA. 30+73.75 TO STA. 27+53.00 N.B.L.
N.T.S. STA. 33+65.15 TO STA. 31+23.85 S.B.L. (OPP.)

D.C. DEPARTMENT OF PUBLIC WORKS
BUREAU OF TRANSPORTATION CONSTRUCTION SERVICES
DESIGN AND ENGINEERING DIVISION

I-395 CENTER LEG OF THE INNER LOOP
REHABILITATION OF
THE MALL TUNNEL

PROJECT ENG. I. B.
DESIGNED BY T. S.
CHECKED BY I. B.
DRAWN BY E. Ny.
PROJECT MGR. I. B.

TIPPETTS.ABBETT.McCARTHY.STRATTON
ENGINEERS, ARCHITECTS AND PLANNERS
IN ASSOCIATION WITH:

NO	DESCRIPTION	NAME	DATE

TYPICAL TUNNEL CROSS-SECTIONS

DIVISION CHIEF
DATE
FILE 1142

F.H.W.A. REG. NO.	STATE	FED AID PROJECT NO.	SHEET NO.	TOTAL SHEETS
3	D.C.	IR-395-1(150)	64	199

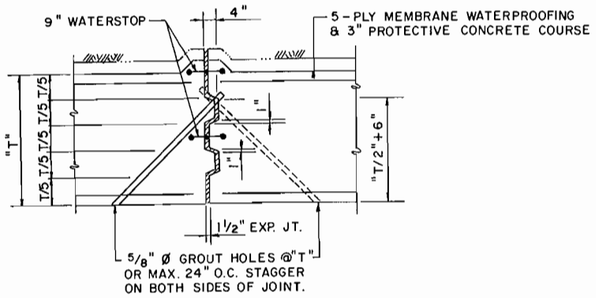

[STA. 36+50.00 – STA. 46+60.00 N.B.L.
STA. 38+54.81 – STA. 48+74.59 S.B.L.] ONLY

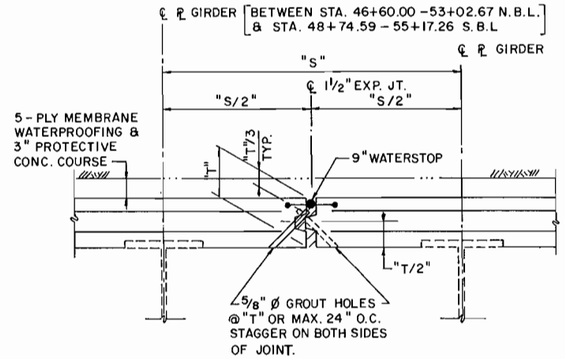

REPAIR TYPE (1) : ROOF LEAK

N.T.S.

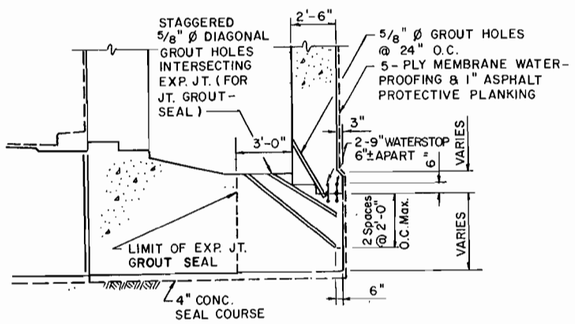

[STA. 36+50.00 – STA. 46+60.00 N.B.L.
STA. 38+54.81 – STA. 48+74.59 S.B.L.] ONLY

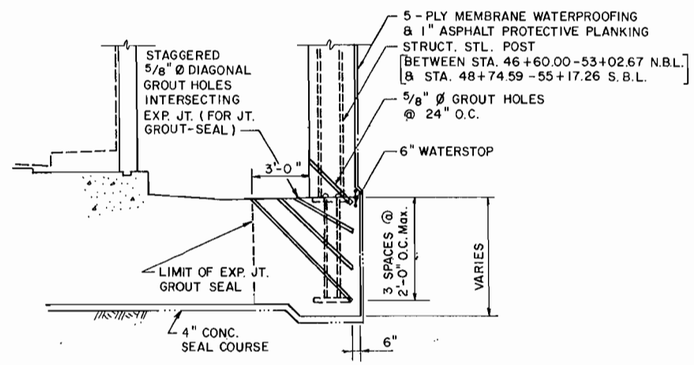

REPAIR TYPE (3) : WALL - FLOOR LEAK

N.T.S.

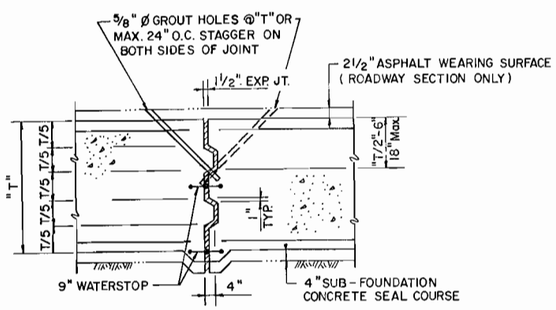

[STA. 36+50.00 – STA. 46+60.00 N.B.L.
STA. 38+54.81 – STA. 48+74.59 S.B.L.] ONLY

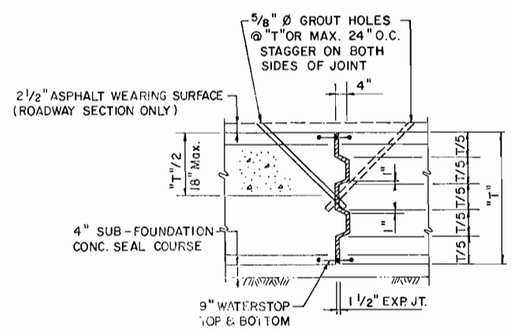

REPAIR TYPE (4) : FLOOR LEAK

N.T.S.

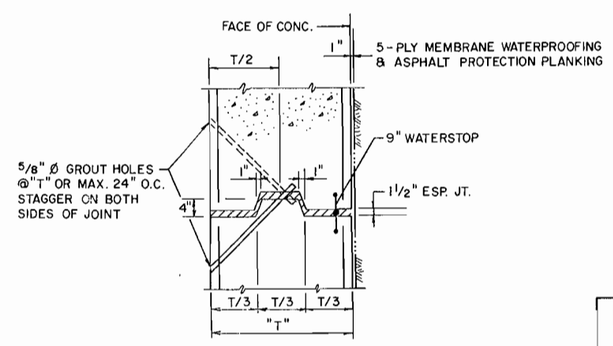

REPAIR TYPE (2) : WALL LEAK

N.T.S.

RECOMMENDED PROCEDURE FOR LEAKAGE REPAIR BY GROUTING

I. GENERAL: PRIOR TO COMMENCING THE ACTUAL GROUTING OPERATION, PERFORM TEST GROUTING BY DRILLING A SERIES OF HOLES AND PROCEED WITH INJECTION TO DETERMINE PROPER DEPTH OF HOLES, LOCATION, SPACING, QUANTITY AND GEL TIME OF MATERIAL, ETC. REQUIRED FOR THE JOB.

II. RECOMMENDED PROCEDURE:

A. REMOVE THE EXISTING JOINT FILLER MATERIAL AS COMPLETELY AS POSSIBLE.

B. DRILL DIAGONALLY A SERIES OF HORIZONTAL AND/OR VERTICAL 5/8 IN. DIAMETER HOLES APPROPRIATE FOR THE TYPES AND LOCATIONS OF LEAKS TO INTERSECT THE JOINTS ON A PATTERN AND SPACING SHOWN FOR EACH REPAIR TYPE.

(i) BEGIN AND END DRILLED HOLES AT LEAST ONE SPACING BEYOND THE LEAKAGE AREA.

(ii) AVOID DRILLING GROUT HOLE THROUGH CONCRETE REINFORCED BARS OR EXISTING EMBEDDED STRUCTURAL STEEL MEMBERS. REDRILL ANOTHER ADJACENT HOLE AS NECESSARY. APPLY EPOXY BONDING AGENT AND FILL THE UNUSED HOLE WITH HYDRAULIC CEMENT FLUSH WITH THE ORIGINAL SURFACE.

C. CLEAN HOLES AND ALL SURFACES WHICH WILL COME IN CONTACT WITH GROUT FREE OF DIRT, LAITANCE, OIL, GREASE, SALT OR ANY OTHER CONTAMINANTS WITH COMPRESSED AIR OF HIGH PRESSURE WATER JET SPRAY. ROUGHEN THE SURFACE IF NECESSARY FOR BETTER ADHESION.

D. WET ALL HOLES AND SURFACES THOROUGHLY BEFORE STARTING THE GROUTING OPERATION.

E. INSTALL JOINT SEALER BY PUSHING OAKUM SOAKED WITH HYDROPHILIC POLYURETHANE LIQUID INTO JOINTS TO STOP THE LEAKAGE.

F. ESTABLISH ENTRY PORTS FOR INJECTION OF GROUT PER THE MANUFACTURER'S RECOMMENDATION.

G. PRESSURE INJECT HYDROPHILIC URETHANE POLYMER GROUT THROUGH THE ENTRY PORT. START FROM THE LOWEST PORT OR CLOSEST TO A WALL OR WALL JOINT AND INJECT UNTIL GROUT APPEARS FROM THE NEIGHBORING PORT, SEAL OFF AND MOVE TO THE NEXT PORT UNTIL COMPLETE.

H. IF LEAKS APPEAR AT ANOTHER LOCATION, REPEAT THE PROCEDURE UNTIL THE LEAKAGE STOPS OR AS DIRECTED BY THE ENGINEER.

I. AFTER COMPLETION, CUT OFF ALL ENTRY PORTS FLUSH WITH THE ORIGINAL SURFACE, REMOVE ALL EXCESS GROUT AND APPLY SURFACE AND JOINT SEALER PER THE MANUFACTURER'S RECOMMENDATION.

D.C. DEPARTMENT OF PUBLIC WORKS
BUREAU OF TRANSPORTATION CONSTRUCTION SERVICES
DESIGN AND ENGINEERING DIVISION

I-395 CENTER LEG OF THE INNER LOOP
REHABILITATION OF
THE MALL TUNNEL

PROJECT ENG. I. B.
DESIGNED BY T. S.
CHECKED BY I. B.
DRAWN BY E. Ny.
PROJECT MGR. I. B.

DIVISION CHIEF
DATE
FILE 1142

LEAK REPAIR PROCEDURE AND DETAILS

TIPPETTS.ABBETT.McCARTHY.STRATTON
ENGINEERS, ARCHITECTS AND PLANNERS
IN ASSOCIATION WITH:
FLEMING CORPORATION

NO	DESCRIPTION	NAME	DATE

REVISIONS

F.H.W.A. REG. NO.	STATE	FED AID PROJECT NO.	SHEET NO.	TOTAL SHEETS
3	D.C.	IR-395-1(150)	65	199

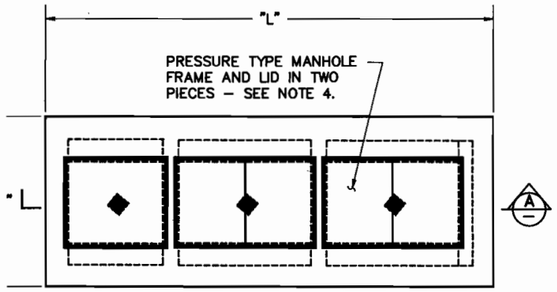

TOP PLAN
N.T.S.

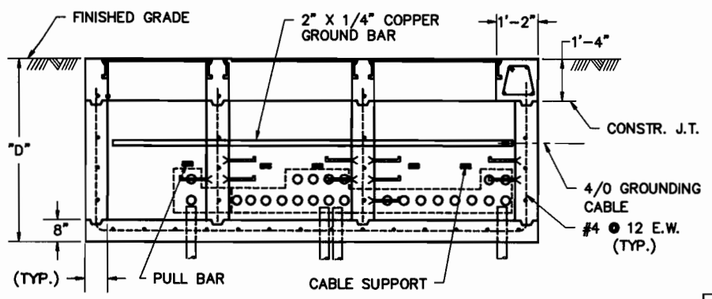

SECTION A
N.T.S.

NOTES:

1. MANHOLE STRUCTURE, FRAME AND COVER,, CONDUITS, CABLE SUPPORT, PULL BARS, GROUND BAR, ETC. SHOWN ARE FOR GRAPHIC INFORMATION ONLY. ACTUAL NUMBERS AND LOCATIONS OF THOSE ITEMS VARY FOR EACH MANHOLE.
2. ALL MANHOLE COMPARTMENTS HAVE ONE 6" X 6" X 2" DEEP SUMP IN FLOOR.
3. NUMBER OF EXISTING CONDUITS (OR DUCTS) SHOWN ON THE TABLE COME FROM THE ORIGINAL 1971 CONTRACT DRAWINGS. ACTUAL NUMBER OF CONDUITS (OR DUCTS) FOR EACH MANHOLE MAY VARY AND TO BE VERIFIED IN FIELD BY CONTRACTOR.
4. EXISTING MANHOLE FRAMES AND LIDS:
   RECTANGULAR TYPE: NEENAH R-6669-L10
   CIRCULAR TYPE: NEENAH R-1915-N

* INCL. ASBESTOS CEMENT DUCTS.

MANHOLE NO.	MANHOLE DIMENSIONS			*NO. OF EXISTING CONDUITS			
	L	W	H	1"ø	2"ø	3"ø	4"ø
1	14'-8"	5'-10"	5'-8"	12	12	9	
2	14'-8"	5'-10"	5'-8"	14	16	19	
3	14'-8"	5'-10"	5'-8"		2	14	
4	11'-8"	5'-4"	7'-4"		5	14	
5	14'-8"	5'-10"	5'-8"	11	9	5	
6	14'-8"	5'-10"	6'-2"	6		33	8
7	14'-8"	5'-10"	5'-8"	6	6	24	8
8	14'-2"	5'-4"	7'-4"	10	5	34	8
9	12'-10"±	6'-4"±	7'-10"±	15	10	24	8
10	12'-1"	7'-4"	7'-0"±			22	8
11	14'-2"	5'-4"	4'-8"	16	12	22	8
12	14'-2"	5'-4"	4'-8"	18	12	24	9

NOTE:
INCLUDES 1-6"ø PVC DRAIN PIPE AT MANHOLE NO. 8 TO BE ABANDONED AND SEALED WITH WATERTIGHT GROUT PLUG. FOLLOW CONDUIT GROUT PLUG PROCEDURE.

EXISTING ELECTRICAL MANHOLES TO BE ABANDONED

REQUIREMENTS FOR ABANDONING EXISTING ELECTRICAL MANHOLE

1. REMOVE ALL MANHOLE LIDS. CARE MUST BE TAKEN TO AVOID DAMAGE TO BOLT HOLES IN FRAMES. DO NOT LEAVE MANHOLE OPEN DURING NON-ACTIVITY HOURS. KEEP MANHOLE CLOSE AT ALL TIME WHEN THERE IS NO WORK; USE LID OR APPROVED TEMPORARY BULKHEAD.
2. INSPECT EXISTING LID'S NEOPRENE GASKET FOR WEAR AND TEAR. REPLACE GASKET AS NECESSARY TO INSURE WATER TIGHTNESS.
3. REMOVE ALL ELECTRICAL WIRING, GROUND BARS, CABLE AND CABLE TRAYS AS REQUIRED IN ELECTRICAL WORK.
4. SEAL ENDS OF ALL CONDUITS PENETRATING EXTERIOR WALLS AND SLABS WITH MINIMUM 6" THICK WATERTIGHT GROUT PLUGS. GROUT PLUG SHALL BE 5000 PSI NON-SHRINK GROUT APPLIED ON ROUGH AND CLEAN SURFACE. PRIME SURFACE WITH EPOXY BONDING AGENT AND PLACE NON-SHRINK GROUT WHILE PRIMER IS STILL TACKY (SEE REPAIR MATERIALS, THIS DRAWING FOR TYPE OF MATERIAL REQUIRED.)
5. CURE GROUT PLUGS WITH WET BURLAP FOR AT LEAST 2 DAYS OR AS RECOMMENDED BY THE MANUFACTURER.
6. AFTER GROUT PLUGS ARE CURED, ALLOW THE ENGINEER ACCESS FOR INSPECTION. PATCH AND SEAL GROUT PLUG AS DIRECTED TO INSURE WATERTIGHTNESS.
7. AT THE COMPLETION OF THIS WORK, CLOSE ALL MANHOLES. REPLACE LIDS, BOLTS AND NEOPRENE GASKETS AS NECESSARY TO INSURE WATERTIGHTNESS.

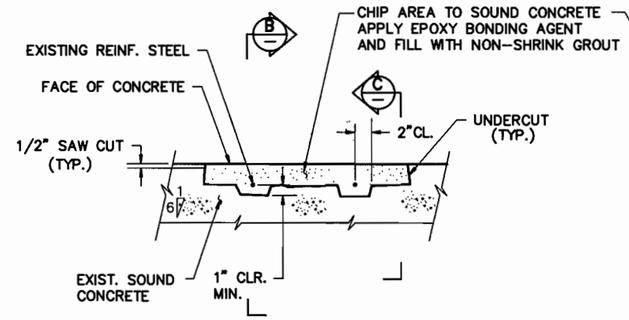

PLAN
REINF. STEEL ENCOUNTERED

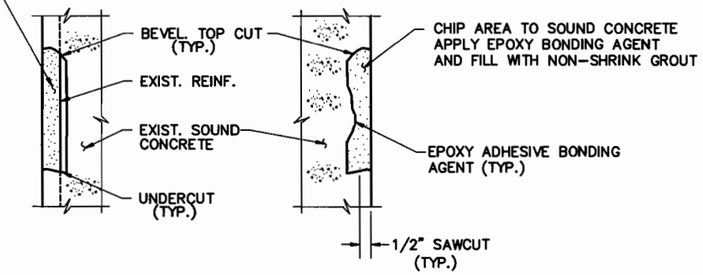

SECTION B
REINF. STEEL ENCOUNTERED

SECTION C
REINF. STEEL NOT ENCOUNTERED

CONCRETE REPAIR DETAIL
N.T.S.

PROCEDURE FOR CONCRETE REPAIR

1. SAW CUT AT LEAST 1" BEYOND EDGES OF REPAIR AREA ALONG NEAT LINES TO A MINIMUM DEPTH OF 1/2" AND CHIP REMAINING DEPTH AS REQUIRED TO SOUND CONCRETE.
2. SQUARE CUT (UNDER CUT OR BEVEL CUT) EXISTING CONCRETE TO KEY IN NEW CONSTRUCTION AS SHOWN. WHERE DEPTH OF CUT EXPOSES REINFORCING BARS, ADDITIONAL CONCRETE SHALL BE REMOVED TO A DEPTH OF AT LEAST 1" BEHIND BARS OR TO SOUND CONCRETE.
3. CLEAN EXPOSED CONCRETE AND REINFORCING FREE OF DIRT, LAITANCE, OIL, GREASE, AND OTHER DETERIORATED MATERIAL. REMOVE RUST FROM REINFORCING BARS TO BARE METAL.
4. WASH REPAIR SURFACE AND ALLOW TO DRY UNTIL DAMP.
5. PRIME REPAIR SURFACE WITH EPOXY ADHESIVE.
6. PLACE NON-SHRINK GROUT WHILE PRIMER IS STILL TACKY.
7. FINISH SURFACE TO MATCH COLOR AND TEXTURE OF EXISTING SURFACE. CURE BY COVERING WITH WET BURLAP FOR AT LEAST 2 DAYS OR AS RECOMMENDED BY THE GROUT MANUFACTURER.

REPAIR MATERIALS

1. NON-SHRINK GROUT SHALL BE A FACTORY-MIXED CHEMICAL-CURING (NON-METALLIC) PRODUCT CONFORMS TO CORPS OF ENGINEERS SPECIFICATIONS CRD C621, STRENGTH AT 28 DAYS SHALL BE MINIMUM 5000 PSI.
2. EPOXY ADHESIVE AS BONDING AGENT SHALL CONFORM TO DCDPW SPEC. 703.26.

NOTES:

1. ALL MATERIALS SHALL BE MIXED AND APPLIED IN ACCORDANCE WITH MANUFACTURER'S SPECIFICATIONS AND RECOMMENDATIONS.
2. CUT ALL EXPOSED DOWELS (WHICH GO THROUGH THE EXPANSION JOINT) AT LEAST 1 1/2" FROM THE JOINT PRIOR TO STARTING CONCRETE REPAIR ACTIVITIES.

TIPPETTS.ABBETT.McCARTHY.STRATTON
ENGINEERS, ARCHITECTS AND PLANNERS
IN ASSOCIATION WITH:
FLEMING CORPORATION

NO	DESCRIPTION	NAME	DATE

D.C. DEPARTMENT OF PUBLIC WORKS
BUREAU OF TRANSPORTATION CONSTRUCTION SERVICES
DESIGN AND ENGINEERING DIVISION

I-395 CENTER LEG OF THE INNER LOOP REHABILITATION OF
THE MALL TUNNEL

ELECTRICAL MANHOLE ABANDONING AND MISCELLANEOUS CONCRETE REPAIR DETAILS

PROJECT ENG. NM
DESIGNED BY TS
CHECKED BY HL
DRAWN BY FK
PROJECT MGR. IB

DIVISION CHIEF
DATE
FILE 1142

F.H.W.A. REG. NO.	STATE	FED AID PROJECT NO.	SHEET NO.	TOTAL SHEETS
3	D.C.	IR-395-1(150)	66	199

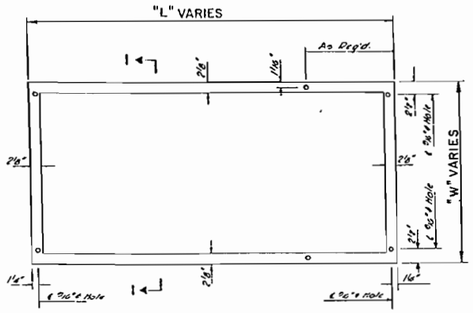

PLAN
2G30, 2S30, 2S144
N.T.S.

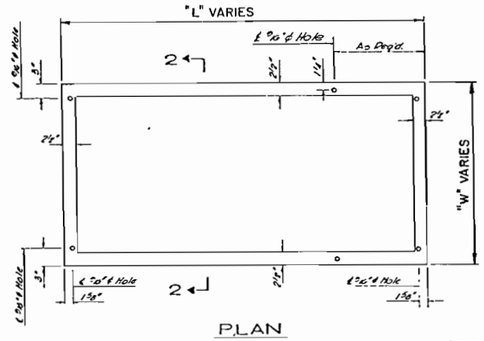

PLAN
2G144
N.T.S.

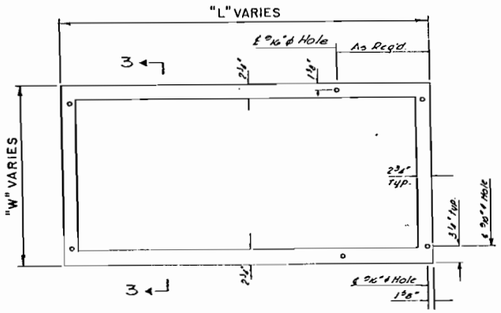

PLAN
4S144
N.T.S.

NOTE:
"L" VARIES (6' ± MAX.)
W VARIES (3' ± MAX.)

CEILING PANELS

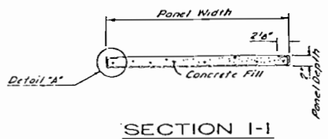

SECTION 1-1
N.T.S.

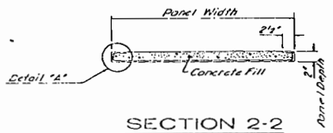

SECTION 2-2
N.T.S.

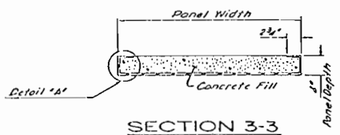

SECTION 3-3
N.T.S.

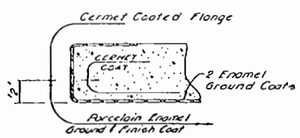

DETAIL "A"
N.T.S.

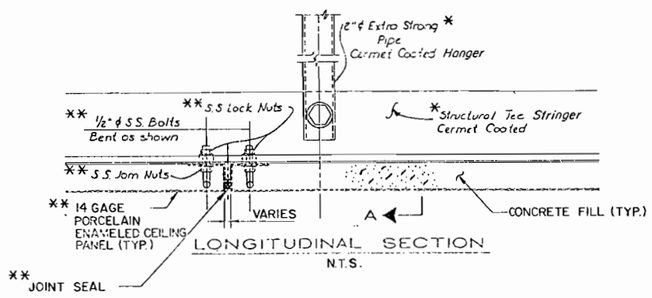

LONGITUDINAL SECTION
N.T.S.

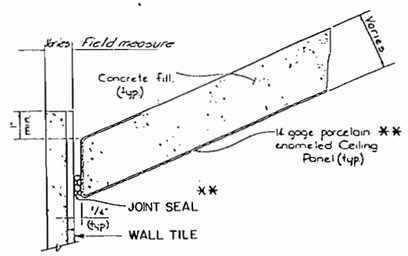

TRANSVERSE SECTION AT WALL
N.T.S.

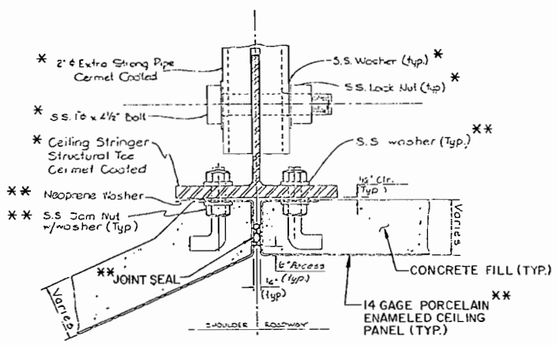

TYPICAL TRANSVERSE SECTIONS
N.T.S.

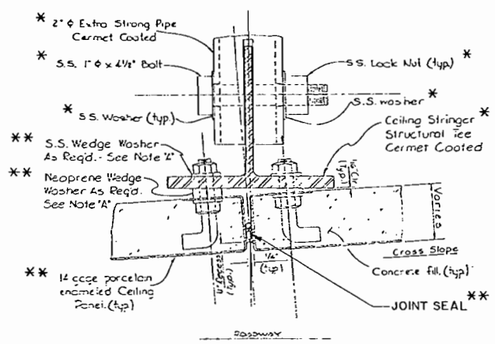

NOTE "A":
STAINLESS STEEL AND NEOPRENE WEDGE WASHERS ARE REQUIRED WHEN CEILING CROSS SLOPE ABOVE ROADWAY EXCEED 0.01 FT./FT.

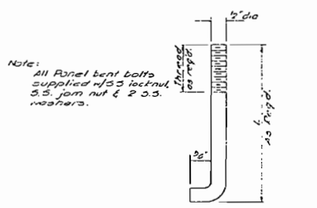

S.S.
BENT BOLT
FOR PANELS OF 2" & 4" DEPTHS
N.T.S.

NOTES:

1. INFORMATION SHOWN ON THIS SHEET ARE REPRODUCTIONS OF D.C. DPW'S FEDERAL AID PROJECT NO. I-95-1(76)2 ORIGINAL CONTRACT DRAWINGS PREPARED BY DAVID VOLKERT & ASSOCIATES, 1969.
2. INFORMATION SHOWN ON THIS SHEET IS FOR CONTRACTOR'S REFERENCE FOR BIDDING PURPOSES ONLY. FOR CONSTRUCTION, CONTRACTOR IS REQUIRED TO PERFORM FIELD INSPECTION AND MEASUREMENT AND REVIEW THE ORIGINAL CONTRACT DRAWINGS INDICATED IN NOTE 1 ABOVE TO DETERMINE THE ACTUAL TYPES, SIZES, DETAILS OF CONNECTIONS, AND ANY OTHER PERTINENT DETAILS NECESSARY FOR THE FABRICATION OF REPLACEMENT CEILING PANELS FOR PROPER FIT AT EACH SPECIFIC LOCATION IN THE TUNNELS.
3. DAMAGED CEILING PANELS TO BE REPLACED OCCUR THROUGHOUT THE TUNNEL; BUT MOST OF WHICH ARE CONCENTRATED IN THE TRAFFIC LANES TOWARD THE NORTH PORTAL OF RAMP "G" AND "H" AND THE SOUTHBOUND TUNNEL. CONTRACTOR SHALL BE RESPONSIBLE TO FIELD VERIFY THE EXTENT OF THE WORK IN ORDER TO PROPERLY PREPARE THE BID UNIT PRICE IN THE PAY ITEM SCHEDULE.
4. FURTHER DAMAGE MAY OCCUR WHICH COULD AFFECT THE QUANTITIES LISTED ON THE PAY ITEM SCHEDULE. CONTRACTOR SHALL BE PREPARED TO PERFORM THE QUANTITY OF THIS WORK FOUND NECESSARY AS DIRECTED BY D.C. DPW AT THE UNIT PRICE GIVEN IN THE PAY ITEM SCHEDULE.

LEGEND:

NUMBERS AT THE END OF CEILING PANEL TYPES DENOTE TYPE OF CONCRETE FILL. FOR EXAMPLE:

2G30 2 IN. THICK PANEL FILLED WITH 30 LBS/CU. FT. CONCRETE.

4S144 4 IN. THICK PANEL FILLED WITH 144 LBS/CU. FT. CONCRETE

* EXISTING CEILING PANEL SUPPORT TO REMAIN.

** DAMAGED CEILING PANEL AND FIXTURES TO BE REPLACED WHERE DIRECTED BY D.C. DPW.

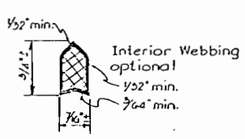

1/4" JOINT SEAL
N.T.S.

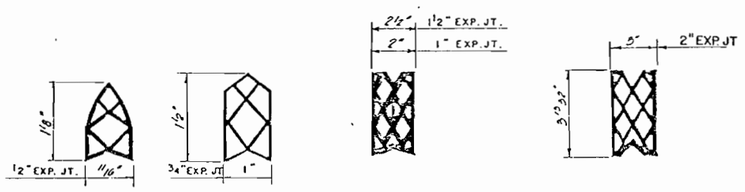

EXPANSION JOINT SEAL
N.T.S.

TIPPETTS.ABBETT.McCARTHY.STRATTON
ENGINEERS, ARCHITECTS AND PLANNERS
IN ASSOCIATION WITH:
FLEMING CORPORATION

NO	DESCRIPTION	NAME	DATE

REVISIONS

D.C. DEPARTMENT OF PUBLIC WORKS
BUREAU OF TRANSPORTATION CONSTRUCTION SERVICES
DESIGN AND ENGINEERING DIVISION

I-395 CENTER LEG OF THE INNER LOOP REHABILITATION OF
THE MALL TUNNEL

TUNNEL CEILING PANEL REHABILITATION DETAILS.

PROJECT ENG. I.B.
DESIGNED BY T.S.
CHECKED BY I.B.
DRAWN BY B.R.
PROJECT MGR. I.B.

DIVISION CHIEF
DATE
FILE 1142
SHEET 66 OF 199

F.H.W.A. REG. NO.	STATE	FED AND PROJECT NO.	SHEET NO.	TOTAL SHEETS
3	D.C.	IR-395-1(150)	67	199

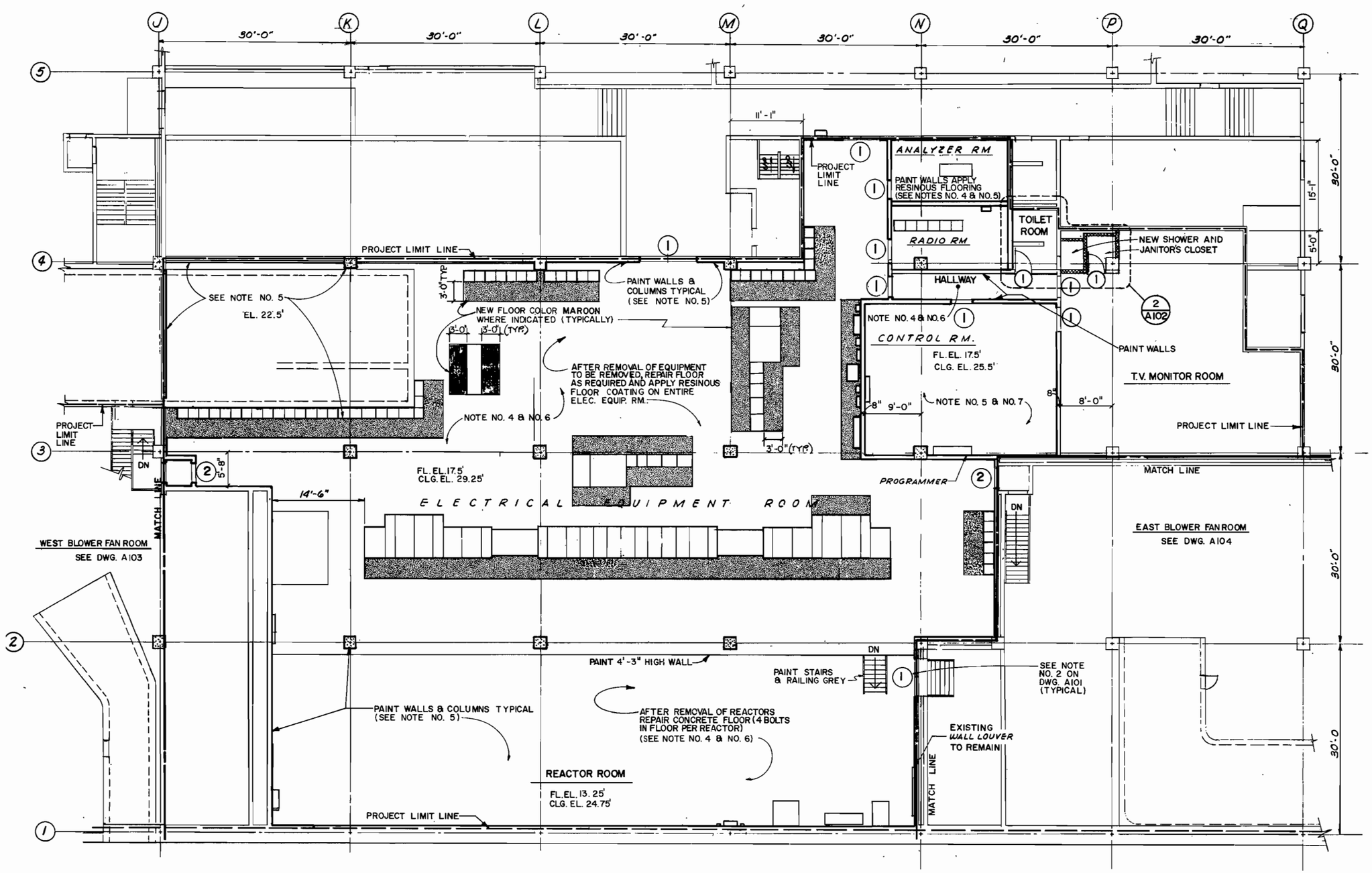

SEE DWG. NO. C114 FOR KEY PLAN.

PLAN (SEE NOTE NO. 3 ON THIS SHEET)
Scale 1/8" = 1'-0"

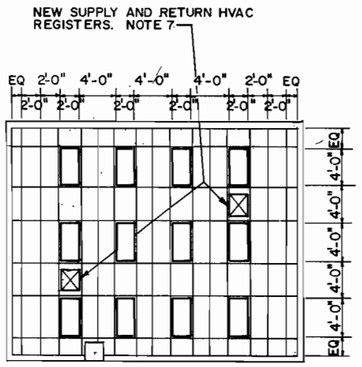

CONTROL ROOM REFLECTED CEILING PLAN

NOTES: (SEE FLOOR PL. FOR LOCATION)

1. THIS AREA IS LOCATED AT THE SOUTH END OF THE SERVICE LEVEL OF THE DEPT. OF LABOR BLDG. 3RD D ST. NW
2. REPLACE LOCK SETS IN ALL DOORS. NUMBERS IN CIRCLES INDICATE KEYING AS FOLLOWS:
   KEY NO: (1) CONTROL ROOMS
   (2) FAN ROOMS
   (3) TUNNELS AND AIR DUCTS.
3. UNLESS OTHERWISE STATED ALL INTERIOR PARTITIONS ARE EXISTING TO REMAIN. FOR EXISTING AND NEW EQUIPMENT LOCATIONS SEE DWG. E 105.
4. UNLESS OTHERWISE NOTED FLOOR COLOR IS GREY FOR NEW RESINOUS COATING (TYPICALLY).
5. PAINT NORTH, SOUTH, EAST, AND WEST WALLS FROM FINISH FLOOR TO FINISH CEILING OR TO UNDER SIDE OF STRUCTURE ABOVE. IF SUSPENDED CEILING DOES NOT EXIST
6. INSTALL NEW RESINOUS COATING FLOOR.
7. REMOVE EXISTING 2'-0" x 4'-0" ACOUSTICAL TILES IN CONTROL ROOM AND REPLACE WITH NEW 2'-0" x 4'-0" LAY-IN ACOUSTICAL TILE. COORDINATE WITH NEW LIGHTING FIXTURES SHOWN ON SHEET E504 AND EXISTING DUCTWORK.

LEGEND

MATCH LINE
PROJECT LIMIT LINE

NO.	DESCRIPTION	NAME	DATE

TIPPETTS · ABBETT · McCARTHY · STRATTON
ENGINEERS, ARCHITECTS AND PLANNERS
IN ASSOCIATION WITH:
FLEMING CORPORATION

D.C. DEPARTMENT OF PUBLIC WORKS
BUREAU OF TRANSPORTATION CONSTRUCTION SERVICES
DESIGN AND ENGINEERING DIVISION

I-395 CENTER LEG OF THE INNER LOOP
REHABILITATION OF
THE MALL TUNNEL

NORTH VENTILATION FACILITIES
TUNNEL ELECTRICAL ROOM
REACTOR ROOM & CONTROL ROOM

PROJECT ENG. G.M.
DESIGNED BY J.H.M.
CHECKED BY G.M.
DRAWN BY C.A.M.
PROJECT MGR. J.B.
DIVISION CHIEF
DATE
FILE 1142

REG. NO.		PROJECT NO.	NO.	SHEETS
3	D.C.	IR-395-1(150)	68	199

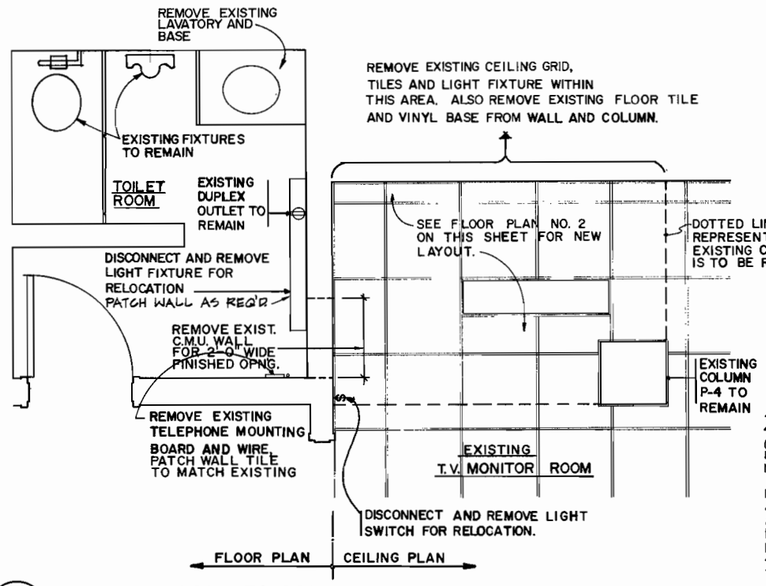

1 A102 **DEMOLITION PLAN**
SCALE: 1/2" = 1'-0"

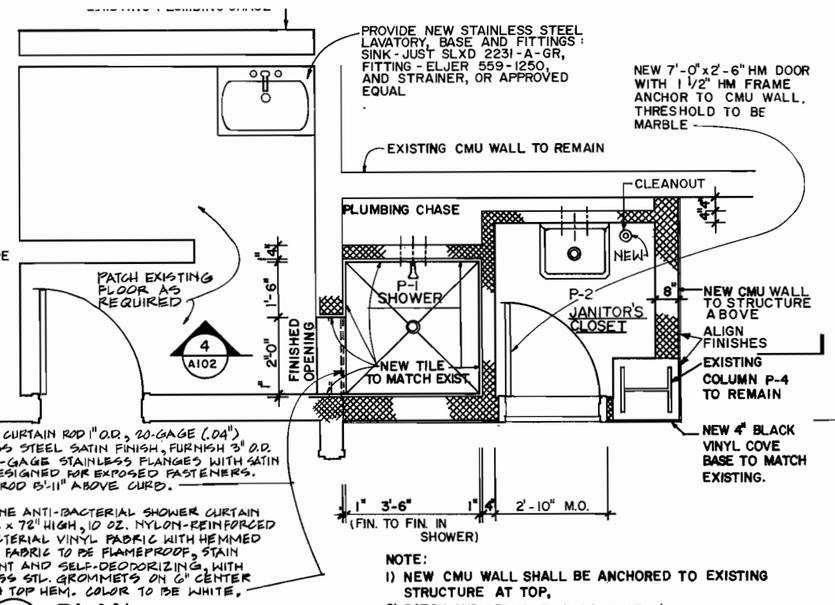

NOTE:
1) NEW CMU WALL SHALL BE ANCHORED TO EXISTING STRUCTURE AT TOP.
2) PATCH AND REPAIR EXISTING JANITOR'S CLOSET FLOOR PRIOR TO INSTALLING NEW RESINOUS FLOORING SYSTEM.

2 A102 **PLAN**
SCALE: 1/2" = 1'-0"

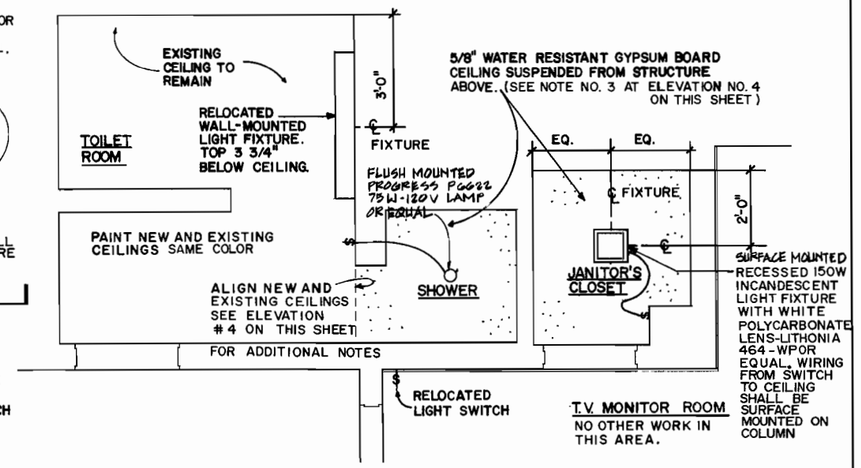

TYPICAL NOTE: FOR ALL NEW LIGHTING FIXTURES, PICK UP POWER FROM NEAREST ELEC. PANEL.

3 A102 **REFLECTED CEILING AND ELECTRICAL PLAN**
SCALE: 1/2" = 1'-0"

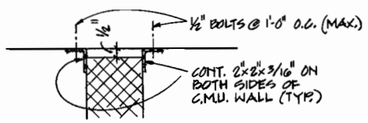

1A A102 **DETAIL**
N.T.S.

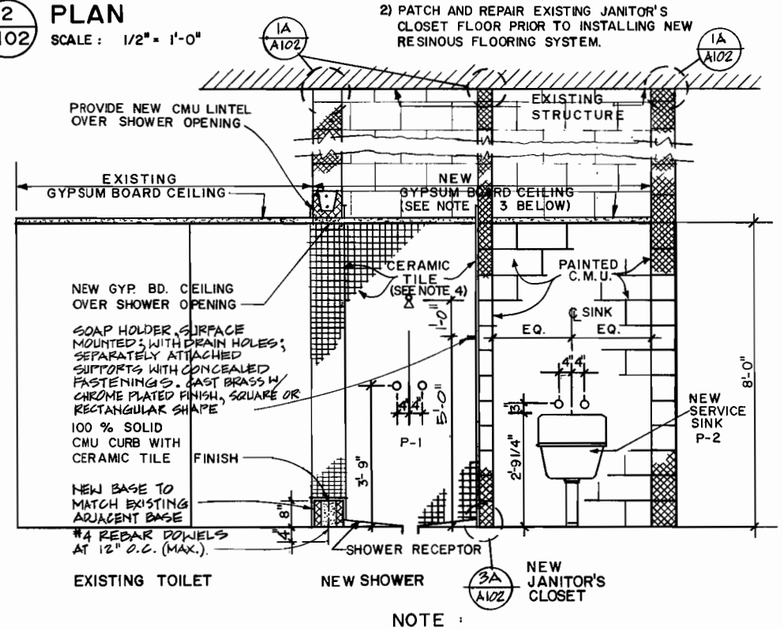

NOTE:

3. NEW GYP. BD. CEILING TO BE HUNG FROM EXISTING STRUCTURE WITH HANGER WIRE CARRYING 1 1/2" CHANNELS WITH FURRING CHANNELS WITH GYP. BD. ATTACHED.
4. AT NEW SHOWER INSTALL NEW CERAMIC TILE 4" (MIN.) ABOVE FINISH CEILING.
5. AREA BENEATH THE FLOOR STRUCTURE IS THE ATTIC ABOVE THE TUNNEL CEILING.
6. LOCATE THE NEAREST EXISTING D.O.L. BUILDING HOT WATER LINE AND COORDINATE THE CONNECTION DETAILS WITH GSA.

4 A102 **SECTION**
SCALE: 1/2" = 1'-0"

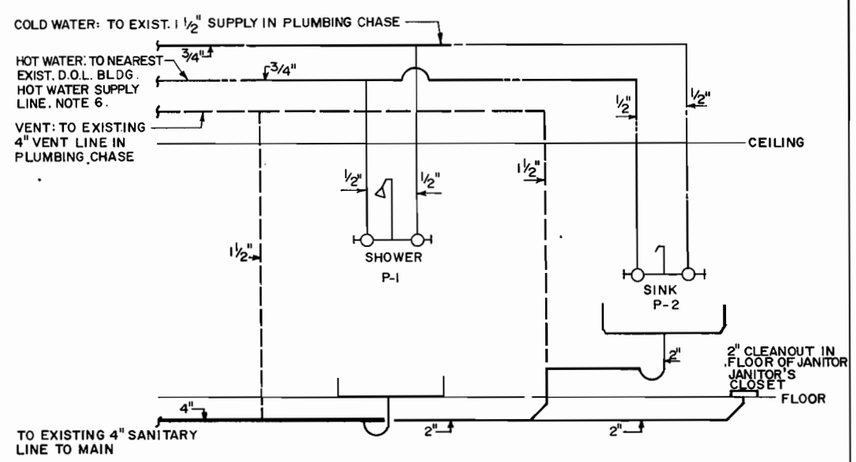

5 A102 **PLUMBING RISER DIAGRAM**
NO SCALE:

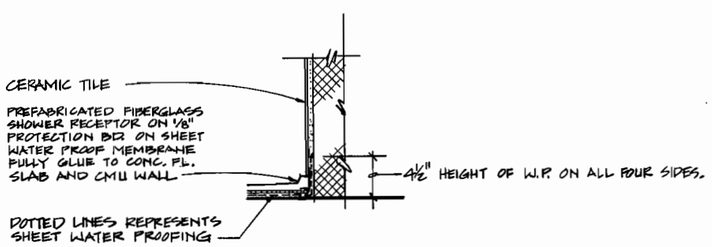

3A A102 **DETAIL**
N.T.S.

D.C. DEPARTMENT OF PUBLIC WORKS
BUREAU OF TRANSPORTATION CONSTRUCTION SERVICES
DESIGN AND ENGINEERING DIVISION

I-395 CENTER LEG OF THE INNER LOOP
REHABILITATION OF
THE MALL TUNNEL

SHOWER AND JANITOR'S CLOSET

PROJECT ENG. G.M.
DESIGNED BY J.H.M.
CHECKED BY G.M.
DRAWN BY Y.B.
PROJECT MGR. I.B.

DIVISION CHIEF
DATE
FILE 1142
SHEET 68 OF 199

TIPPETTS.ABBETT.McCARTHY.STRATTON
ENGINEERS, ARCHITECTS AND PLANNERS
IN ASSOCIATION WITH:
FLEMING CORPORATION

NO	DESCRIPTION	NAME	DATE

REVISIONS

NEW PROBLEM
8-15-04

F.H.W.A. REG. NO.	STATE	FED. AID PROJECT NO.	SHEET NO.	TOTAL SHEETS
3	D.C.	IR-395-1(150)	69	199

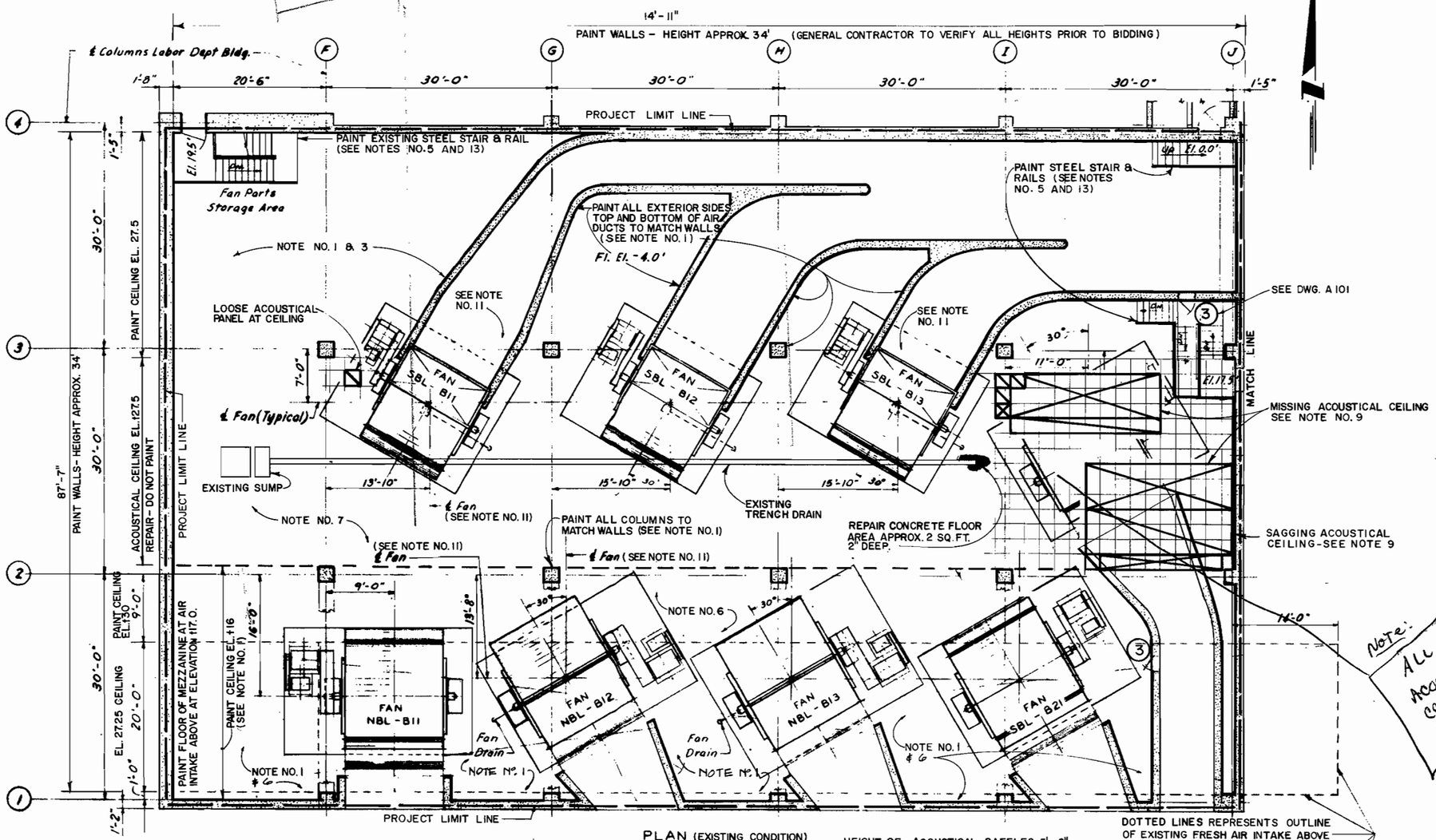

PLAN (EXISTING CONDITION)
1/8" = 1'-0"

DOTTED LINES REPRESENTS OUTLINE OF EXISTING FRESH AIR INTAKE ABOVE

Note: ALL ACOUSTICAL CEILING HAS BEEN REMOVED

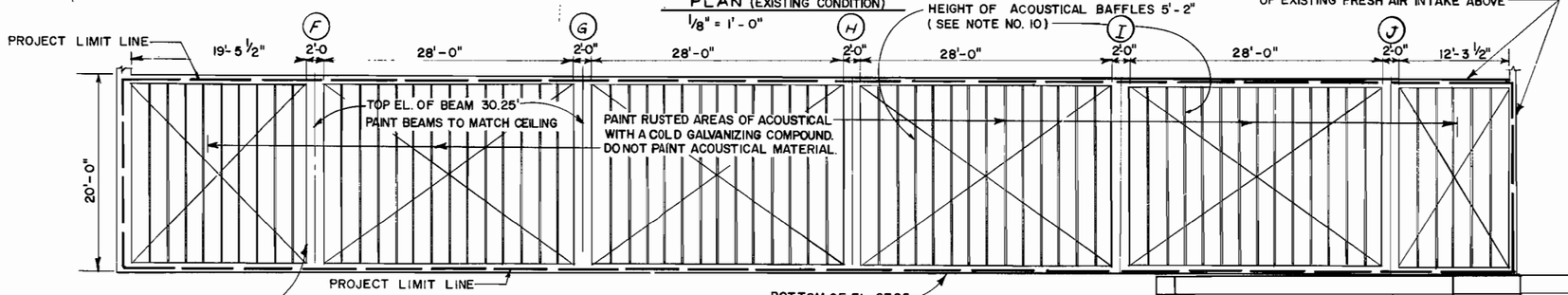

PLAN OF EXISTING FRESH AIR INTAKE
1/8" = 1'-0"

NOTES: (SEE FLOOR PL. FOR LOCATION)

1. ALL WALLS AND COLUMNS IN THIS AREA TO BE PAINTED WHITE FROM FLOOR TO CEILING TYPICALLY.
2. ANY EXPOSED ACOUSTICAL MATERIALS ARE NOT TO BE PAINTED.
3. ALL EXPOSED DUCTS TO BE PAINTED WHITE.
4. ALL CONCRETE STAIRS AND ADJACENT STEEL RAILING TO BE PAINTED GREY TYPICALLY.
5. STEEL DOORS AND FRAMES TO BE PAINTED GREY TYPICALLY.
6. ALL EXPOSED GALVANIZED METAL AND CONDUITS TO BE PAINTED TO MATCH EXISTING COLOR.
7. REPAIR ALL DAMAGE OR DETERIORATED CONCRETE FLOORS TO ALIGN WITH EXISTING ADJACENT CONCRETE FLOOR PRIOR TO INSTALLING NEW RESINOUS COATING OVER ENTIRE ROOM FLOOR SPACE.
8. REPLACE ALL DAMAGED CEILING GRIDS AND HANGING WIRE FOR 2' X 2' GRID SYSTEM (SEE SPECIFICATIONS).
9. GENERAL CONTRACTOR SHALL REPLACE ALL 2'-0" X 2'-0" SUSPENDED ACOUSTICAL PANELS THAT ARE SAGGING LOOSE. REPLACE ALL PANELS THAT ARE MISSING AS INDICATED ON PLANS WITH FOLLOWING SYMBOLS:
   - ☐ LOOSE
   - ☒ MISSING
10. CLEAN AND REPAIR ALL METAL RUSTED AREAS OF ACOUSTICAL BAFFLES WITH A COLD GALVANIZING PAINT COMPOUND.
11. SEE MECHANICAL DRAWINGS CONCERNING FANS.
12. "NOT USED"
13. ALL STEEL, STAIRS AND ADJACENT RAILINGS TO BE PAINTED GREY.

LEGEND
MATCH LINE
PROJECT LIMIT LINE

TIPPETTS·ABBETT·McCARTHY·STRATTON
ENGINEERS, ARCHITECTS AND PLANNERS
IN ASSOCIATION WITH:
FLEMING CORPORATION

NO	DESCRIPTION	NAME	DATE

REVISIONS

D.C. DEPARTMENT OF PUBLIC WORKS
BUREAU OF TRANSPORTATION CONSTRUCTION SERVICES
DESIGN AND ENGINEERING DIVISION

I-395 CENTER LEG OF THE INNER LOOP
REHABILITATION OF
THE MALL TUNNEL

TUNNEL VENTILATION
NORTH VENTILATION FACILITY
WEST BLOWER FAN ROOM
PLAN

PROJECT ENG. G.M.
DESIGNED BY J.H.M.
CHECKED BY G.M.
DRAWN BY C.A.M.
PROJECT MGR. I.B.
DIVISION CHIEF
DATE
FILE 1142
SHEET 69 OF 199
DWG. NO. A103

F.H.W.A. REG. NO.	STATE	FED AID PROJECT NO.	SHEET NO	TOTAL SHEETS
3	D.C.	IR-395-1(150)	70	199

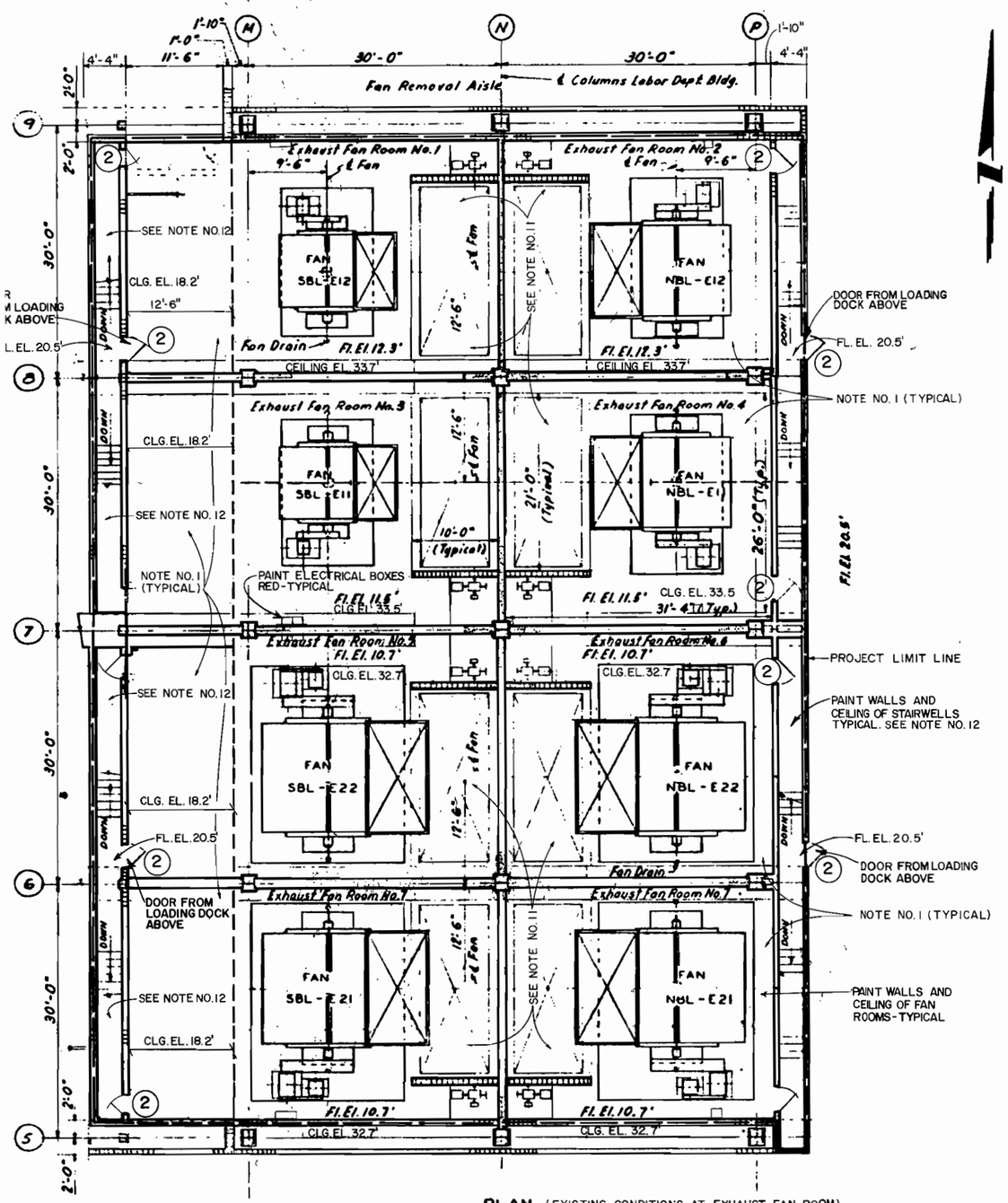

PLAN (EXISTING CONDITIONS AT EXHAUST FAN ROOM)
1/8" = 1'-0"

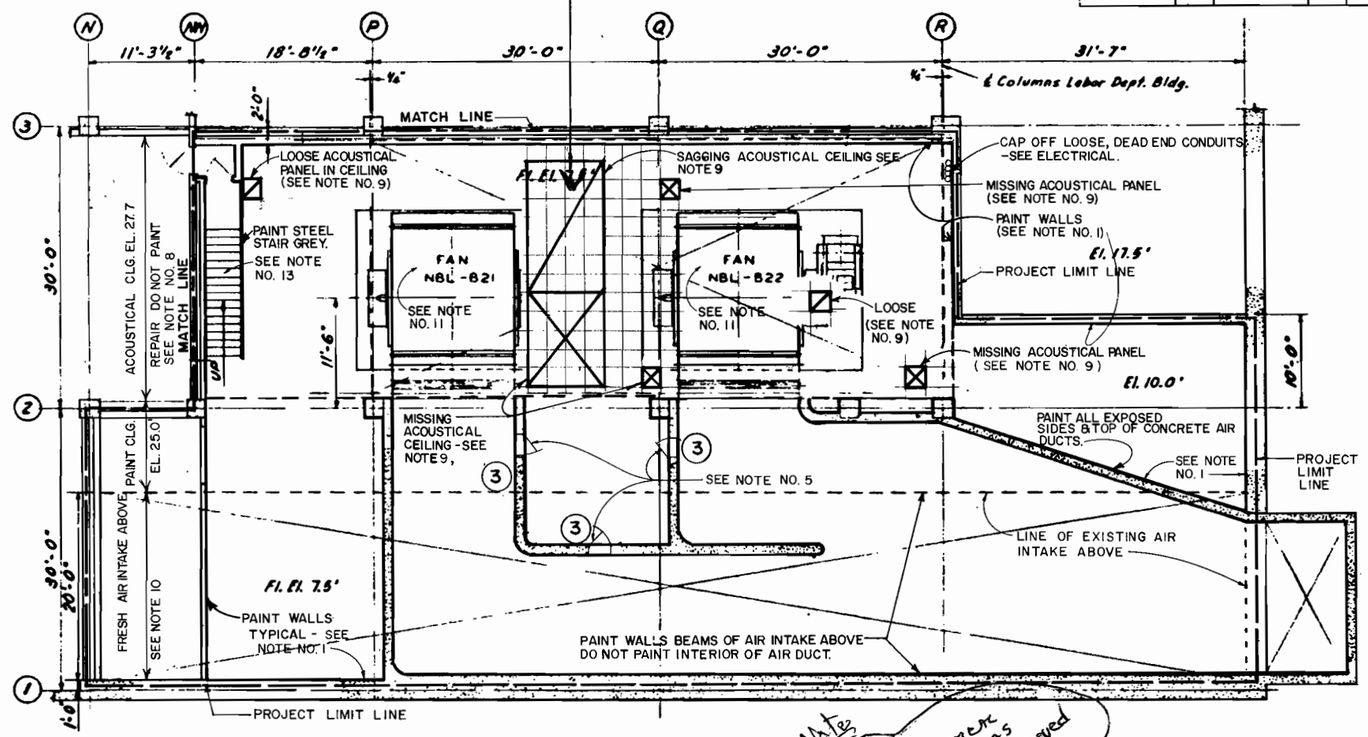

PLAN
1/8" = 1'-0"
EAST BLOWER FAN ROOM

Note: ALL ACOUSTICAL CEILING HAS BEEN REMOVED

NOTES: (SEE FLOOR PL. FOR LOCATION)

1. ALL WALLS AND COLUMNS IN THIS AREA TO BE PAINTED WHITE FROM FLOOR TO CEILING TYPICALLY.
2. ANY EXPOSED ACOUSTICAL MATERIALS ARE NOT TO BE PAINTED.
3. ALL EXPOSED DUCTS TO BE PAINTED WHITE.
4. ALL CONCRETE STAIRS AND ADJACENT STEEL RAILING TO BE PAINTED GREY TYPICALLY.
5. STEEL DOORS AND FRAMES TO BE PAINTED GREY TYPICALLY.
6. ALL EXPOSED GALVANIZED METAL AND CONDUITS TO BE PAINTED TO MATCH EXISTING COLOR.
7. REPAIR ALL DAMAGE OR DETERIORATED CONCRETE FLOORS TO ALIGN WITH EXISTING ADJACENT CONCRETE FLOOR PRIOR TO INSTALLING NEW RESINOUS COATING OVER ENTIRE ROOM FLOOR SPACE.
8. REPLACE ALL DAMAGED CEILING GRIDS AND HANGING WIRE FOR 2' X 2' GRID SYSTEM (SEE SPECIFICATIONS).
9. GENERAL CONTRACTOR SHALL REPLACE ALL 2'-0" X 2'-0" SUSPENDED ACOUSTICAL PANELS THAT ARE SAGGING LOOSE. REPLACE ALL PANELS THAT ARE MISSING AS INDICATED ON PLANS WITH FOLLOWING SYMBOLS:
   - ☒ LOOSE
   - ☒ MISSING
10. CLEAN AND REPAIR ALL METAL RUSTED AREAS OF ACOUSTICAL BAFFLES WITH A COLD GALVANIZING PAINT COMPOUND.
11. SEE MECHANICAL DRAWINGS CONCERNING FANS.
12. ALL WALLS AND CEILING IN STAIRWELLS TO BE PAINTED WHITE TYPICALLY.
13. ALL STEEL STAIRS AND ADJACENT RAILINGS TO BE PAINTED GREY.

LEGEND

MATCH LINE
PROJECT LIMIT LINE

TIPPETTS · ABBETT · McCARTHY · STRATTON
ENGINEERS, ARCHITECTS AND PLANNERS
IN ASSOCIATION WITH:
FLEMING CORPORATION

NO	DESCRIPTION	NAME	DATE

REVISIONS

D.C. DEPARTMENT OF PUBLIC WORKS
BUREAU OF TRANSPORTATION CONSTRUCTION SERVICES
DESIGN AND ENGINEERING DIVISION

I-395 CENTER LEG OF THE INNER LOOP
REHABILITATION OF
THE MALL TUNNEL

TUNNEL VENTILATION
NORTH VENTILATION FACILITY
EXHAUST FAN ROOMS & EAST BLOWER FAN ROOM, PLAN

PROJECT ENG. G.M.
DESIGNED BY J.H.M.
CHECKED BY G.M.
DRAWN BY C.A.M.
PROJECT MGR. I.B.
DIVISION CHIEF
DATE
FILE 142
SHEET 70 OF 199
DWG. NO. A104

F.H.W.A. REG. NO.	STATE	FED AID PROJECT NO.	SHEET NO.	TOTAL SHEETS
3	D.C.	IR-395-1(150)	71	199

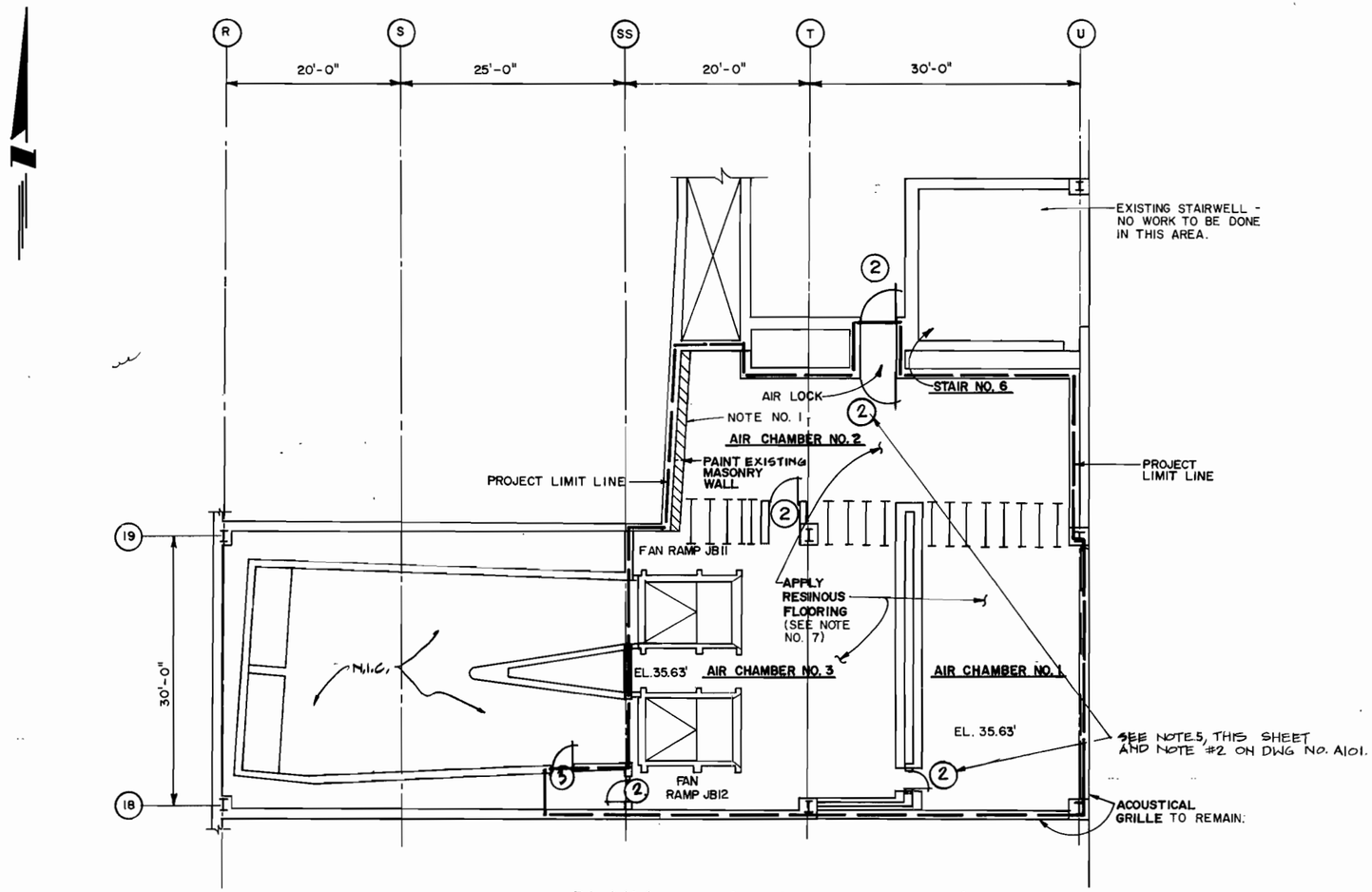

PLAN (NEW WORK) SEE KEY PLAN ON DWG. Nº. C114 FOR LOCATION
1/8" = 1' - 0"

NOTES: (SEE FLOOR PL. FOR LOCATION)

1. CROSS HATCH AREA TO BE PAINTED WHITE FROM FLOOR TO CEILING TYPICALLY.
2. ANY EXPOSED ACOUSTICAL MATERIALS ARE NOT TO BE PAINTED.
3. ALL EXPOSED DUCTS TO BE PAINTED WHITE.
4. "NOT USED"
5. STEEL DOORS AND FRAMES TO BE PAINTED GREY TYPICALLY.
6. ALL EXPOSED GALVANIZED METAL AND CONDUITS TO BE PAINTED TO MATCH EXISTING COLOR.
7. REPAIR ALL DAMAGE OR DETERIORATED CONCRETE FLOORS TO ALIGN WITH EXISTING ADJACENT CONCRETE FLOOR PRIOR TO INSTALLING NEW RESINOUS COATING OVER ENTIRE ROOM FLOOR SPACE.
8. REPLACE ALL DAMAGED CEILING GRIDS AND HANGING WIRE FOR 2' X 2' GRID SYSTEM (SEE SPECIFICATIONS).
9. "NOT USED"
10. CLEAN AND REPAIR ALL METAL RUSTED AREAS OF ACOUSTICAL BAFFLES WITH A COLD GALVANIZING PAINT COMPOUND.
11. SEE MECHANICAL DRAWINGS CONCERNING FANS.

LEGEND

MATCH LINE
PROJECT LIMIT LINE

TIPPETTS·ABBETT·McCARTHY·STRATTON
ENGINEERS, ARCHITECTS AND PLANNERS
IN ASSOCIATION WITH:
FLEMING CORPORATION

NO	DESCRIPTION	NAME	DATE

REVISIONS

D.C. DEPARTMENT OF PUBLIC WORKS
BUREAU OF TRANSPORTATION CONSTRUCTION SERVICES
DESIGN AND ENGINEERING DIVISION

I-395 CENTER LEG OF THE INNER LOOP
REHABILITATION OF
THE MALL TUNNEL

TUNNEL VENTILATION
RAMP J BLOWER FAN ROOM
PLAN & ELEVATION

PROJECT ENG. G.M.
DESIGNED BY J.H.M.
CHECKED BY G.M.
DRAWN BY C.A.M.
PROJECT MGR. I.B.
DIVISION CHIEF
DATE
FILE 1142
SHEET 71 OF 199
DWG. NO. A105

F.H.W.A. REG. NO.	STATE	FED. AID PROJECT NO.	SHEET NO.	TOTAL SHEETS
3	D.C.	IR-395-1(88)	72	189

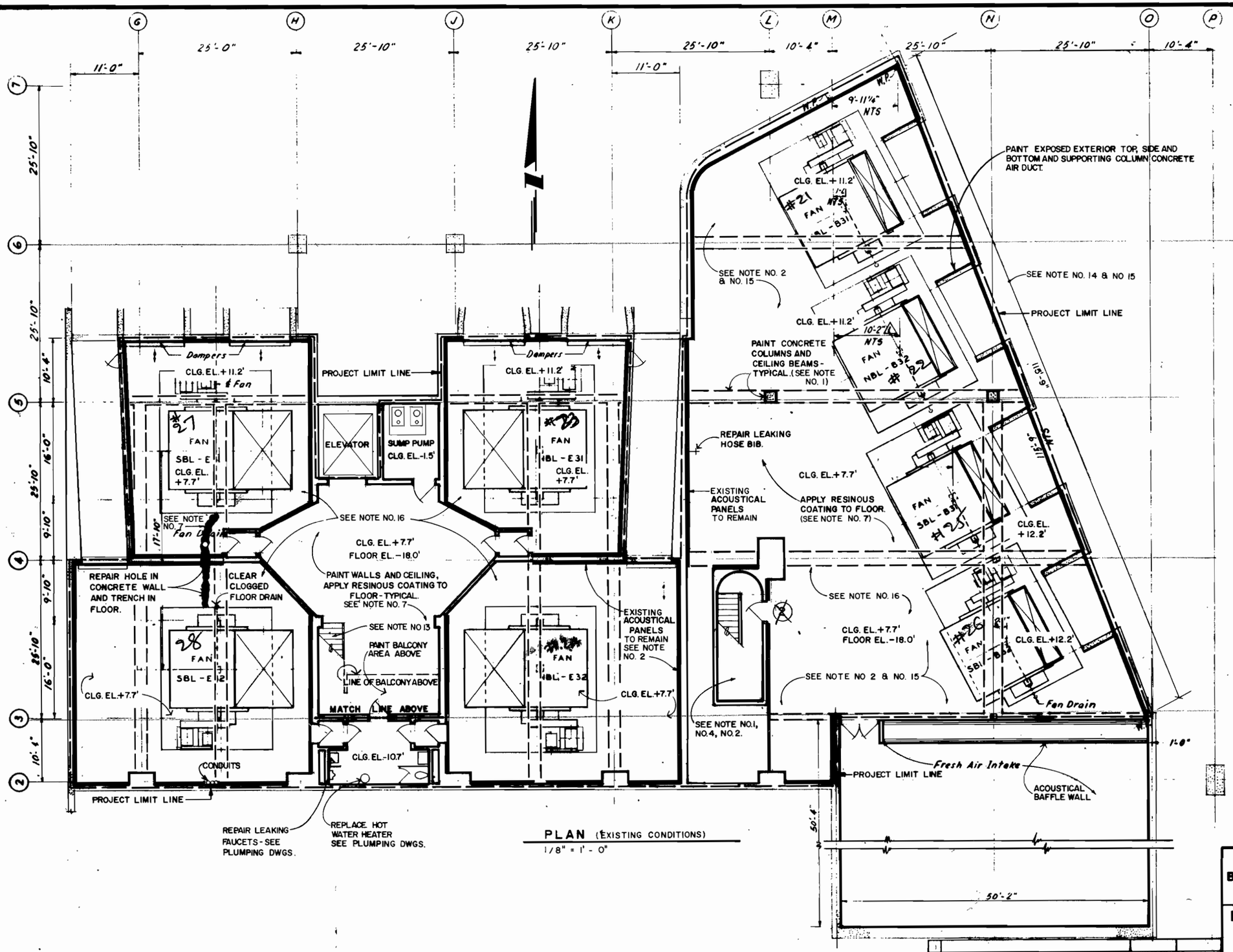

PLAN (EXISTING CONDITIONS)
1/8" = 1' - 0"

NOTES: (SEE FLOOR PL. FOR LOCATION)

1. ALL EXPOSED WALLS AND COLUMNS IN THIS AREA, WITHOUT ACOUSTIC PANELS, ARE TO BE PAINTED WHITE FROM FLOOR TO CEILING, TYPICALLY.
2. ANY EXPOSED ACOUSTICAL MATERIALS ARE NOT TO BE PAINTED.
3. ALL EXPOSED DUCTS TO BE PAINTED WHITE.
4. ALL CONCRETE STAIRS AND ADJACENT STEEL RAILING TO BE PAINTED GREY TYPICALLY.
5. STEEL DOORS AND FRAMES TO BE PAINTED GREY TYPICALLY.
6. ALL EXPOSED GALVANIZED METAL AND CONDUITS TO BE PAINTED TO MATCH EXISTING COLOR.
7. REPAIR ALL DAMAGE OR DETERIORATED CONCRETE FLOORS TO ALIGN WITH EXISTING ADJACENT CONCRETE FLOOR PRIOR TO INSTALLING NEW RESINOUS COATING OVER ENTIRE ROOM FLOOR SPACE.
8. "NOT USED"
9. "NOT USED"
10. "NOT USED"
11. SEE MECHANICAL DRAWINGS CONCERNING FANS.
12. ALL WALLS AND CEILING IN STAIRWELLS TO BE PAINTED WHITE TYPICALLY.
13. ALL STEEL STAIRS AND ADJACENT RAILINGS TO BE PAINTED GREY.
14. PAINT EXPOSED CONCRETE, ON EXISTING WALLS WITH ACOUSTIC PANELS, FROM F.F. TO THE UNDERSIDE OF THE ACOUSTIC PANELS (APPROX. 3'-0" ABOVE FINISH FLOOR).
15. ACOUSTICAL PANELS ON WALLS EXTEND FROM 3'-0" ABOVE THE FLOOR TO THE BOTTOMS OF THE BEAMS ABOVE. WHERE INDICATED ON THE PLAN AS EXTENDING ACROSS DOORS AND DUCTS, THE PANELS ARE CUT OUT AT THAT LEVEL, AND CONTINUOUS ABOVE AND BELOW. CONTRACTOR SHALL PAINT ALL EXPOSED CONCRETE AND GWB WALL SURFACES.
16. ACOUSTICAL PANELS ARE ON THE CEILINGS OF ALL FAN ROOMS ON THIS SHEET. THE PANELS ARE MOUNTED AGAINST THE SLAB AND ARE INTERRUPTED BY THE BEAMS WHERE THEY DROP BELOW THE SLAB. THESE EXPOSED CONCRETE BEAMS SHALL BE PAINTED UNDER THIS CONTRACT.

LEGEND

MATCH LINE
PROJECT LIMIT LINE

TIPPETTS · ABBETT · McCARTHY · STRATTON
ENGINEERS, ARCHITECTS AND PLANNERS
IN ASSOCIATION WITH:
FLEMING CORPORATION

NO	DESCRIPTION	NAME	DATE

REVISIONS

D.C. DEPARTMENT OF PUBLIC WORKS
BUREAU OF TRANSPORTATION CONSTRUCTION SERVICES
DESIGN AND ENGINEERING DIVISION

I-395 CENTER LEG OF THE INNER LOOP
REHABILITATION OF
THE MALL TUNNEL

TUNNEL VENTILATION
SOUTH VENTILATION FACILITY
BLOWER & EXHAUST FAN ROOM
PLAN

PROJECT ENG. R.M.
DESIGNED BY J.H.M.
CHECKED BY R.M.
DRAWN BY C.A.M.
PROJECT NO. I-B

DIVISION CHIEF
DATE
DWG. NO. A-10

F.H.W.A. REG. NO.	STATE	FED. AID PROJECT NO.	SHEET NO.	TOTAL SHEETS
3	D.C.	IR-395-1(150)	73	199

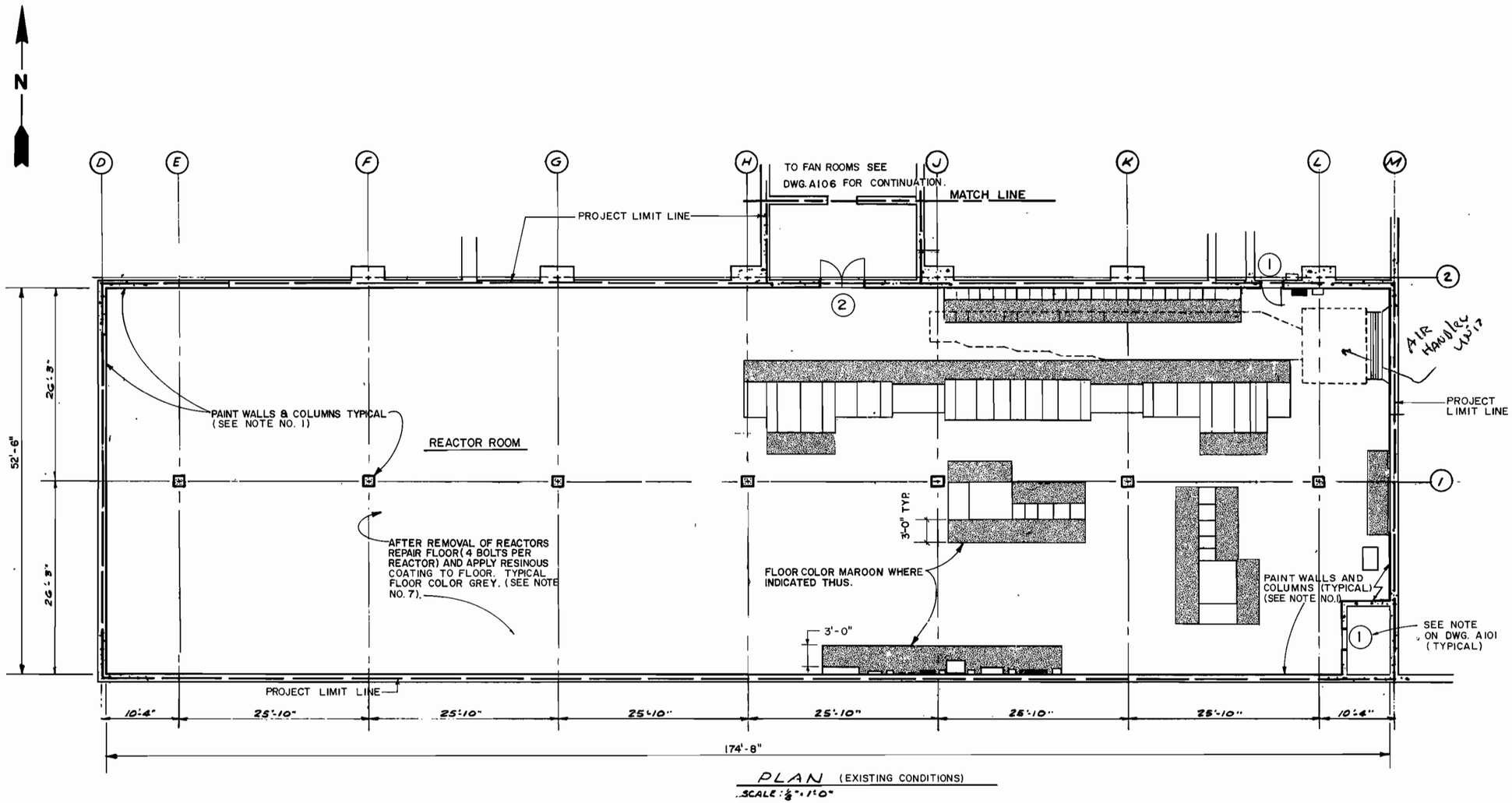

PLAN (EXISTING CONDITIONS)
SCALE: 1/8" = 1'-0"

NOTE:

A. SEE NOTE NO. 2 ON DWG. A101 FOR KEY NUMBER TYPES

NOTES: (SEE FLOOR PL. FOR LOCATION)

1. ALL WALLS AND COLUMNS IN THIS AREA TO BE PAINTED WHITE FROM FLOOR TO CEILING TYPICALLY.
2. ANY EXPOSED ACOUSTICAL MATERIALS ARE NOT TO BE PAINTED.
3. "NOT USED"
4. "NOT USED"
5. STEEL DOORS AND FRAMES TO BE PAINTED GREY TYPICALLY.
6. ALL EXPOSED GALVANIZED METAL AND CONDUITS TO BE PAINTED TO MATCH EXISTING COLOR.
7. REPAIR ALL DAMAGE OR DETERIORATED CONCRETE FLOORS TO ALIGN WITH EXISTING ADJACENT CONCRETE FLOOR PRIOR TO INSTALLING NEW RESINOUS COATING OVER ENTIRE ROOM FLOOR SPACE.

LEGEND

MATCH LINE
PROJECT LIMIT LINE

D.C. DEPARTMENT OF PUBLIC WORKS
BUREAU OF TRANSPORTATION CONSTRUCTION SERVICES
DESIGN AND ENGINEERING DIVISION

I-395 CENTER LEG OF THE INNER LOOP
REHABILITATION OF
THE MALL TUNNEL

SOUTH VENTILATION FACILITIES
TUNNEL ELECTRICAL ROOM

PROJECT ENG. G.M.
DESIGNED BY J.H.M.
CHECKED BY G.M.
DRAWN BY C.A.M.
PROJECT MGR. I.B.
DIVISION CHIEF
DATE
FILE 1142

TIPPETTS · ABBETT · McCARTHY · STRATTON
ENGINEERS, ARCHITECTS AND PLANNERS
IN ASSOCIATION WITH:
FLEMING CORPORATION

NO	DESCRIPTION	NAME	DATE