EXISTING PHASE I

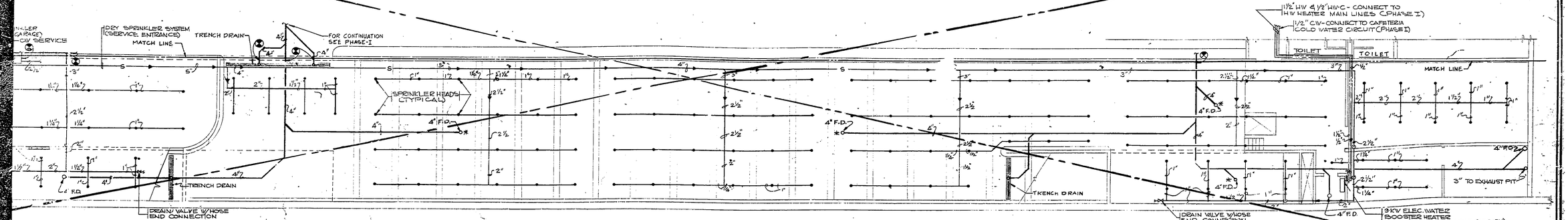

DRIVE-THRU PLAN
SCALE: 1/8" = 1'-0"

NOTE
* FLOOR DRAIN WITHOUT TRAP

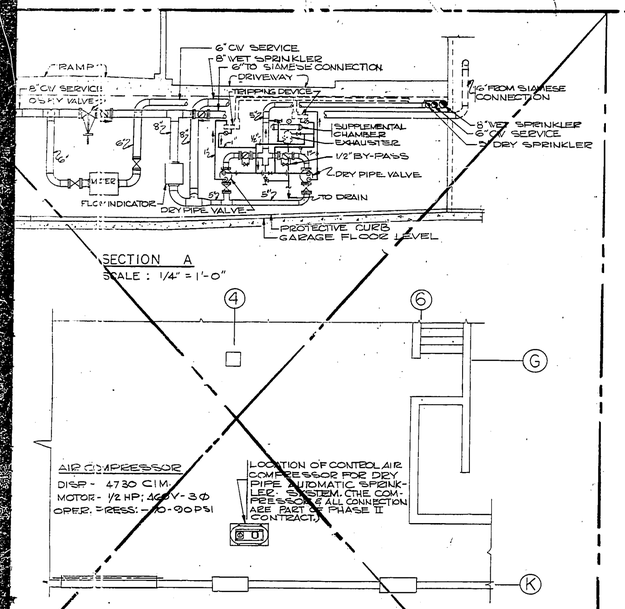

SECTION A
SCALE: 1/4" = 1'-0"

AIR COMPRESSOR
DISP - 4730 CIM
MOTOR - 1/2 HP; 460V-3Φ
OPER. PRESS: 70-90 PSI

LOCATION OF CONTROL AIR COMPRESSOR FOR DRY PIPE AUTOMATIC SPRINKLER SYSTEM. THE COMPRESSOR & ALL CONNECTION ARE PART OF PHASE II CONTRACT.

SOUTH M.E. RM. PART PLAN (PHASE I)
SCALE: 1/4" = 1'-0"

EXISTING PHASE I

TEMPERATURE CONTROL FOR H&V UNIT

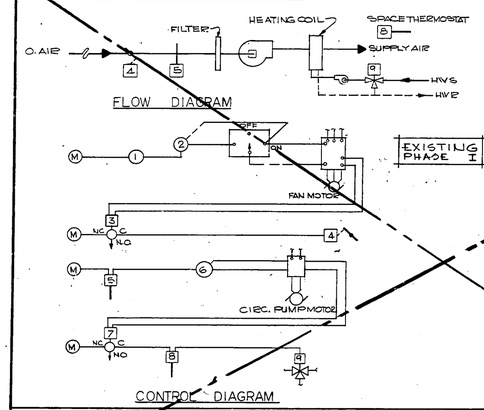

EXISTING PHASE I

CONTROL SCHEDULE			
NO.	DESCRIPTION	LOCATION	OPERATION
1	MANUAL SWITCH 2-POSITION	CCP	REMOTE STARTING UVU
2	P.E. SWITCH	ACP	N.O.
3	MAGNETIC PILOT VALVE	ACP	ADMITS AIR WHEN FAN IS RUNNING
4	PARALLEL BLADE DAMPER	O.A.	N.C.
5	REMOTE BULB THERMOSTAT	O.A.	D.A. SET AT 60°F
6	P.E. SWITCH	ACP	N.C.
7	MAGNETIC PILOT VALVE	ACP	ADMITS AIR WHEN PUMP IS RUNNING
8	SPACE THERMOSTAT	RM. SERVED	R.A. SET AT 68°F
9	3-WAY MIXING WATER VALVE	H.W. LINES TO HEATING COIL	N.C. TO H.W. SUPPLY MAIN

SEQUENCE OF OPERATION:

1. WHEN FAN IS STARTED EP VALVE NO. 3 IS ENERGIZED AND OUTSIDE AIR DAMPER NO. 4 IS OPENED.
2. WHEN OUTSIDE AIR TEMPERATURE DROPS BELOW 60°F O.A. THERMOSTAT NO. 5 STARTS HOT WATER CIRCULATOR THRU PNEUMATIC-ELECTRIC SWITCH NO. 6. SPACE THERMOSTAT NO. 8 MODULATES HOT WATER MIXING VALVE NO. 9 TO MAINTAIN ITS SETTING.

TEMPERATURE CONTROL FOR UNIT HEATER

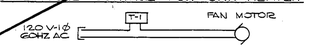

SEQUENCE OF OPERATION

1. SPACE THERMOSTAT T-1 MAINTAINS ITS SETTING BY CYCLING FAN MOTOR.

THIS DRAWING TO BE USED AS ALL INFORMATION DRAWING ONLY

CONTRACTOR TO VERIFY EXISTING CONDITIONS.

VICTOR A. LUNDY AND LYLES, BISSETT, CARLISLE & WOLFF ASSOCIATED ARCHITECTS

SEVERUD-PERRONE-FISCHER-STURM-CONLIN-BANDEL CONSULTING ENGINEERS

ARCHITECTURAL	STRUCTURAL	MECHANICAL ELECTRICAL

GENERAL SERVICES ADMINISTRATION
PUBLIC BUILDINGS SERVICE : WASHINGTON, D.C.

PROJECT	U.S. TAX COURT BUILDING PLAZA BUILDING IX
LOCATION	WASHINGTON, D.C.
STREET	3RD STREET N.W. BETWEEN D & E STREETS
PROJ. NO.	4993
DATE	
CONTR. NO.	GS-00B-0061
DATE	12. MAY 1975
DRAWING TITLE	SPRINKLER & TEMP. CONTROL SYSTEMS
DRAWING NUMBER	9MP-2

N

F2 DC0114 443