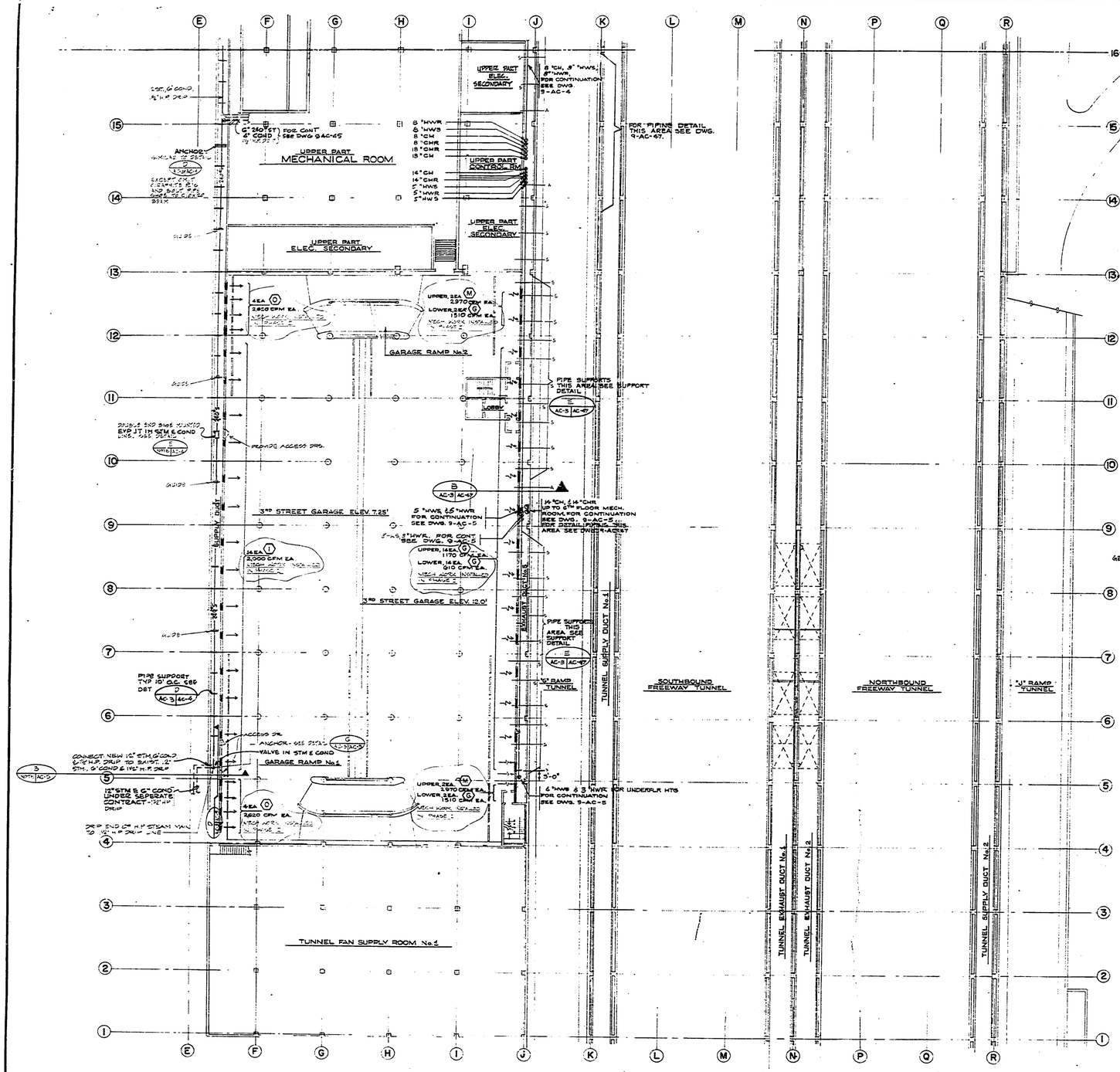

FREEWAY & GARAGE MID LEVEL PLAN — PART I
SCALE: 1/6" = 1'-0"

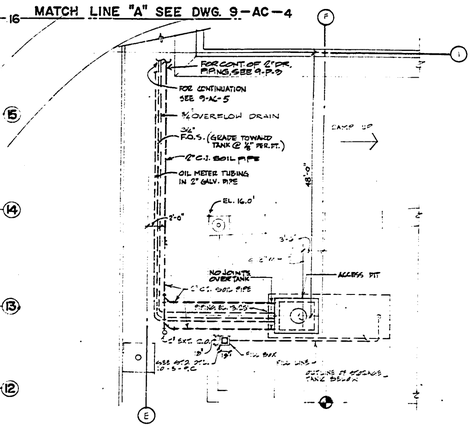

PARTIAL PLAN-PLAZA SOUTH (A)
SCALE: 1/8" = 1'-0"

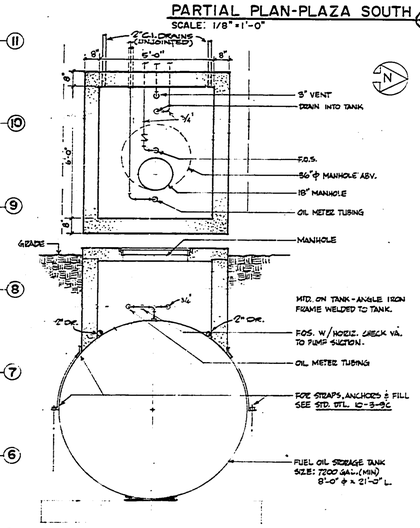

FUEL OIL TANK PIPING DETAIL (B)
SCALE: 1/2" = 1'-0"

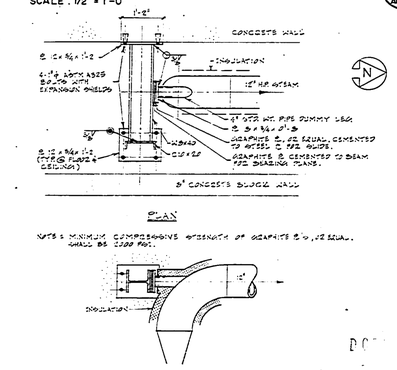

12" H.P. STEAM LINE ANCHOR DETAIL (C)
SCALE: 3/4" = 1'-0"

GENERAL NOTES

1. SEE NOTE 2 DWG 9-AC-5
2. SEE NOTE 3 DWG 9-AC-5

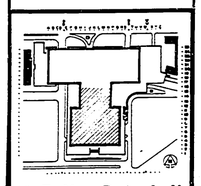

KEY PLAN

BROOKS BARR GRAEBER & WHITE
AND
PITTS MEBANE PHELPS & WHITE
ARCHITECTS AND ENGINEERS

APPROVED	ARCHITECTURAL	STRUCTURAL	MECHANICAL ELECTRICAL

GENERAL SERVICES ADMINISTRATION
PUBLIC BUILDINGS SERVICE - WASHINGTON D.C.

PROJECT	U.S. DEPARTMENT OF LABOR
LOCATION	WASHINGTON D.C.
STREET	200 CONSTITUTION AVENUE N.W.
PROJ NO	49910
FILE NO	
DRAWN BY	BN
CHECKED BY	JKW
DRAWING TITLE	FREEWAY & GARAGE MID LEVEL PART I. AIR CONDITIONING
DRAWING NUMBER	9-AC-3
PHASE	II

LOCKWOOD, ANDREWS & NEWNAM, INC.
CONSULTING ENGINEERS

DC 622 280

30X