SOLICITATION/CONTRACT/ORDER FOR COMMERCIAL ITEMS

OFFEROR TO COMPLETE BLOCKS 12, 17, 23, 24, & 30

1 REQUISITION NO

PAGE 1 OF 61

2 CONTRACT NO: GS-00P-15-BSD-1148

3 AWARD/EFFECTIVE DATE: April 1, 2015

4 ORDER NO

5 SOLICITATION NO: GS-00P-14-BSD-1016

6 SOLICITATION ISSUE DATE: 05/30/2014

7. FOR SOLICITATION INFORMATION CALL: a NAME: Kenneth M. Shutika

b TELEPHONE NO (No collect calls): (202) 329-1826

8 OFFER DUE DATE/LOCAL TIME: 07/11/2014

9 ISSUED BY: GSA, Energy Division (PMAA), 1800 F Street, NW, Room 5100, Washington, DC 20405

☒ UNRESTRICTED
☐ SET ASIDE: % FOR
☐ SMALL BUSINESS
☐ SMALL DISADV BUSINESS
☐ 8(A)

SIC: 4911
SIZE STD: 750 Employees

DESTINATION UNLESS BLOCK IS MARKED
☒ SEE SCHEDULE

☐ 13a THIS CONTRACT IS A RATED ORDER UNDER DPAS (15 CFR 700)

13b RATING

14 METHOD OF SOLICITATION
☐ RFQ ☐ IFB ☒ RFP

15 DELIVER TO: See Article 7 and attached scope of work — CODE

16 ADMINISTERED BY: See Block 9 — CODE

17a CONTRACTOR/OFFEROR: Great Bay Solar I, LLC, 1802 Lavaca Street, Austin, TX 78701 — CODE / FACILITY CODE

18a PAYMENT WILL BE MADE BY: See Article 9 — CODE

☐ 17b. CHECK IF REMITTANCE IS DIFFERENT AND PUT SUCH ADDRESS IN OFFER

18b. SUBMIT INVOICES TO ADDRESS SHOWN IN BLOCK 18a UNLESS BLOCK BELOW IS CHECKED ☒ SEE ADDENDUM

19. ITEM NO.	20. SCHEDULE OF SUPPLIES/SERVICES	21. QUANTITY	22. UNIT	23. UNIT PRICE	24. AMOUNT
1	See Contract Terms and Conditions TOTAL *(Attach Additional Sheets as Necessary)*	See Article 3	MWh	See Exhibit D	

25 ACCOUNTING AND APPROPRIATION DATA

26 TOTAL AWARD AMOUNT *(For Govt Use Only)*

☐ 27a SOLICITATION INCORPORATES BY REFERENCE FAR 52.212-1, 52.212-4. FAR 52.212-3 AND 52.212-5 ARE ATTACHED. ADDENDA ☐ ARE ☐ ARE NOT ATTACHED

☒ 27b CONTRACT/PURCHASE ORDER INCORPORATES BY REFERENCE FAR 52.212-4. FAR 52.212-5 IS ATTACHED. ADDENDA ☒ ARE ☐ ARE NOT ATTACHED

28 ☒ CONTRACTOR IS REQUIRED TO SIGN THIS DOCUMENT AND RETURN 2 COPIES TO ISSUING OFFICE. CONTRACTOR AGREES TO FURNISH AND DELIVER ALL ITEMS SET FORTH OR OTHERWISE IDENTIFIED ABOVE AND ON ANY ADDITIONAL SHEETS SUBJECT TO THE TERMS AND CONDITIONS SPECIFIED HEREIN.

29. ☒ AWARD OF CONTRACT: REFERENCE YOUR OFFER DATED July 11, 2014 YOUR OFFER ON SOLICITATION (BLOCK 5), INCLUDING ANY ADDITIONS OR CHANGES WHICH ARE SET FORTH HEREIN, IS ACCEPTED AS TO ITEMS:

(b) (6) [redacted] ACTOR

(b) (6) [redacted]

30b NAME AND TITLE OF SIGNER *(TYPE OR PRINT)*: Greg Unis, President

30c DATE SIGNED: 4/1/2015

31b NAME OF CONTRACTING OFFICER *(TYPE OR PRINT)*: Kenneth M. Shutika

31c DATE SIGNED: 4/1/15

32a QUANTITY IN COLUMN 21 HAS BEEN
☐ RECEIVED ☐ INSPECTED ☐ ACCEPTED, AND CONFORMS TO THE CONTRACT, EXCEPT AS NOTED

32b SIGNATURE OF AUTHORIZED GOVT REPRESENTATIVE

32c DATE

33 SHIP NUMBER ☐ PARTIAL

34 VOUCHER NUMBER

35 AMOUNT VERIFIED CORRECT FOR

36 PAYMENT ☐ COMPLETE ☐ PARTIAL ☐

37 CHECK NUMBER

38 S/R ACCOUNT NO

39 S/R VOUCHER NO

40 PAID BY

41a I CERTIFY THIS ACCOUNT IS CORRECT AND PROPER FOR PAYMENT

41b SIGNATURE AND TITLE OF CERTIFYING OFFICER

41c DATE

42a RECEIVED BY *(Print)*

42b RECEIVED AT *(Location)*

42c DATE REC'D *(YY/MM/DD)*

42d TOTAL CONTAINERS

AUTHORIZED FOR LOCAL REPRODUCTION
Computer Generated

SEE REVERSE FOR OMB CONTROL NUMBER AND PAPERWORK BURDEN STATEMENT Prescribed by GSA - FAR (48 CFR) 53.212

STANDARD FORM 1449 (10-95)

[Execution Version]

RENEWABLE ENERGY CONTRACT

GS-00P-15-BSD-1148

BETWEEN

GREAT BAY SOLAR I, LLC

AND

U.S. GENERAL SERVICES ADMINISTRATION

Table of Contents

Article 1. Definitions and Rules of Interpretation 1

1.1. Rules of Construction 1
1.2. Interpretation with Interconnection Agreement. 2
1.3. Interpretation of Arrangements for Electric Supply to the Facility. 2
1.4. Definitions. 3

Article 2. Term and Termination 9

Article 3. Facility Description 9

3.1. Summary Description 9
3.2. Location. 10

Article 4. Commercial Operation 10

4.1. Commercial Operation 10
4.2. Test Energy 10

Article 5. Delivery and Metering 10

5.1. Delivery Arrangements 10
5.2. Electric Metering Devices. 10
5.3. Adjustment for Inaccurate Meters 11

Article 6. Conditions Precedent 12

6.1. Seller's Conditions Precedent 12

Article 7. Sale and Purchase of Renewable Energy 12

7.1. Sale and Purchase 12
7.2. Title and Risk of Loss 13
7.3. Market Participant 13
7.4. Scheduling and Cooperation 13
7.5. Real-Time Locational Margin Price 13

Article 8. Payment Calculations 13

8.1. Energy Payment Rate 13

Article 9. Billing and Payment 13

9.1. Billing Invoices 13
9.2. Metered Billing Data 14
9.3. Compensation for Ancillary Services 14
9.4. Payments 14
9.5. Billing Disputes 14
9.6. Designation of Buyer's Transaction Manager 14
9.7. Buyer Responsibility for Bill Payment 15

Article 10. Operations and Maintenance 15

10.1. Facility Operation 15
10.2. Outage and Performance Reporting 15

10.3. Access to Facility 15
10.4. Reliability Standards 15
10.5. RECs and Tax Attributes 16

Article 11. [*Intentionally Omitted*] 16

Article 12. Default and Remedies 16

12.1. Events of Default of Seller 16
12.2. Facility Financing Party's Right to Cure Default of Seller 17
12.3. Events of Default of Buyer 17
12.4. Damages Prior to Termination 17
12.5. Termination 17
12.6. Limitation on Damages 18
12.7. Remedies Cumulative 18
12.8. No Consequential Damages 18
12.9. Payment of Amounts Due 18
12.10. Duty to Mitigate 18
12.11. Termination for Convenience 18

Article 13. Contract Administration and Notices 19

13.1. Notices in Writing 19
13.2. Representative for Notices 19
13.3. Authority of Representatives 19
13.4. Operating Records 19
13.5. Operating Log 19
13.6. [Intentionally Omitted] 19
13.7. Billing and Payment Records 19
13.8. Exhibits 20
13.9. Dispute Resolution 20

Article 14. Force Majeure 20

14.1. Definition of Force Majeure 20
14.2. Applicability of Force Majeure 21
14.3. Limitations on Effect of Force Majeure 21
14.4. Delays Attributable to Buyer 21

Article 15. Representations, Warranties and Covenants 22

15.1. Seller's Representations, Warranties and Covenants 22
15.2. Buyer's Representations, Warranties and Covenants 22

Article 16. Insurance 23

16.1. Evidence of Insurance 23
16.2. Term and Modification of Insurance 23

Article 17. Limitation of Liability 23

Article 18. Legal and Regulatory Compliance 24

18.1. Compliance With Laws 24
18.2. Officer Certificates 24

Article 19. Assignment and Other Transfer Restrictions 24

19.1. No Assignment Without Consent 24
19.2. Accommodation of Facility Financing Party 24
19.3. Notice of Facility Financing Party Action 25
19.4. Subcontracting 25

Article 20. Miscellaneous 25

20.1. Waiver 25
20.2. Taxes 25
20.3. Rate Changes 25
20.4. Disclaimer of Third Party Beneficiary Rights 25
20.5. Relationship of the Parties 25
20.6. Equal Employment Opportunity Compliance Certification 26
20.7. Survival of Obligations 26
20.8. Severability 26
20.9. Complete Agreement; Amendments 26
20.10. Binding Effect 26
20.11. Headings 26
20.12. Counterparts 26
20.13. Governing Law 27
20.14. Press Releases and Media Contact 27
20.15. Forward Contract 27
20.16. Confidentiality 27
20.17. Anti-deficiency 28
20.18. Incorporation of FARs 28

EXHIBIT A (to Contract) INTERCONNECTION POINT 29

EXHIBIT B (to Contract) Notices and Contact Information 30

EXHIBIT C (to Contract) INSURANCE COVERAGE 31

EXHIBIT D (to Contract) RENEWABLE ENERGY PAYMENT RATE 32

EXHIBIT E (to Contract) APPLICABLE FEDERAL ACQUISITION REGULATIONS 33

Renewable Energy Contract
GS-00P-15-BSD-1148
between

Renewable Energy Development Company
and
the U.S. General Services Administration

Apr 15 This Renewable Energy Contract No. GS-00P-15-BSD-1148 (this "Contract") is made this ~~27th~~ 1st day of ~~March~~, 2015 (the "Effective Date"), by and between the UNITED STATES OF AMERICA, acting through the Administrator of General Services (hereinafter referred to as the "Government" or "Buyer"), pursuant to the authority contained in Section 201(a) of the Federal Property and Administrative Services Act of 1949, as amended, 40 U.S.C. 501(b)(1), and Great Bay Solar I, LLC, a Maryland limited liability company ("Seller"). Seller and Buyer are hereinafter referred to individually as a "Party" and collectively as the "Parties."

WHEREAS, Seller desires to develop, design, construct, own and operate a solar-energy conversion electric generating facility known as Great Bay Solar with an expected total name plate Capacity of approximately 75 MW (AC), which is further defined below as the "Facility;"

WHEREAS, Seller intends to locate the Facility in Somerset County, Maryland and to interconnect the Facility with the Interconnection Provider's System;

WHEREAS, Seller desires to sell and deliver to Buyer at the Point of Delivery, Buyer's Portion of the Renewable Energy produced by the Facility and Buyer desires to buy the same from Seller in accordance with the terms and conditions set forth in this Contract.

NOW, THEREFORE, in consideration of the mutual covenants herein contained, the sufficiency and adequacy of which are hereby acknowledged, the Parties agree to the following:

Article 1. Definitions and Rules of Interpretation

1.1. *Rules of Construction.*

The capitalized terms listed in this Contract shall have the meanings set forth herein whenever the terms appear in this Contract, whether in the singular or the plural or in the present or past tense. Other terms used in this Contract but not defined in this Contract shall have meanings as commonly used in the English language and, where such words have a generally accepted meaning in Good Utility Practices, such meaning shall apply. Words not otherwise defined herein that have well known and generally accepted technical or trade meanings are used herein in accordance with such recognized meanings. In addition, the following rules of interpretation shall apply:

(A) The masculine shall include the feminine and neuter.

(B) References to "Articles," "Sections," or "Exhibits" shall be to articles, sections, or exhibits of this Contract.

(C) The Exhibits attached hereto are incorporated in and are intended to be a part of this Contract; *provided, however*, that in the event of a conflict between the terms of any Exhibit and the terms of this Contract, the terms of this Contract shall take precedence.

(D) This Contract was negotiated and prepared by both Parties with the advice and participation of counsel. The Parties have agreed to the wording of this Contract and none of the

provisions hereof shall be construed against one Party on the ground that such Party is the author of this Contract or any part hereof.

(E) The Parties shall act reasonably and in accordance with the principles of good faith and fair dealing in the performance of this Contract. Unless expressly provided otherwise in this Contract, (a) when this Contract requires the consent, approval, or similar action by a Party, such consent or approval shall not be unreasonably withheld, conditioned or delayed, and (b) wherever this Contract gives a Party a right to determine, require, specify or take similar action with respect to a matter, such determination, requirement, specification or similar action shall be reasonable.

(F) Use of the words "include" or "including" or similar words shall be interpreted as "include without limitation" or "including, without limitation."

(G) Use of the words "tax" or "taxes" shall be interpreted to include taxes, fees, surcharges, and the like.

(H) References to "dollars" or "cents" or numerical designations using "$" shall refer to the currency of the United States.

1.2. ***Interpretation with Interconnection Agreement.***

The Parties recognize that Seller will enter into a separate Interconnection Agreement with the Interconnection Provider.

(A)The Parties acknowledge and agree that the Interconnection Agreement shall be a separate and free-standing contract and that the terms of this Contract are not binding upon the Interconnection Provider.

(B)Notwithstanding any other provision in this Contract, nothing in the Interconnection Agreement shall alter or modify Seller's or Buyer's rights, duties and obligations under this Contract. This Contract shall not be construed to create any rights between Seller and the Interconnection Provider.

1.3. ***Interpretation of Arrangements for Electric Supply to the Facility.***

This Contract does not provide for the supply of retail power to the Facility, for purposes of solar unit start-up or shut-down, or for any other purpose ("Station Service"). Seller shall contract with the local utility in whose retail service territory the Facility is located ("Local Provider") for the supply of Station Service.

(A) Seller's arrangements for the supply of Station Service to the Facility shall be separate and free-standing arrangements. The terms of this Contract are not binding upon the Local Provider. For purposes of this Contract, the Local Provider shall be deemed to be a separate entity and separate contracting party, whether or not the Local Provider is Buyer or an Affiliate of Buyer.

(B) Notwithstanding any other provision in this Contract, nothing in Seller's arrangements for the supply of Station Service to the Facility shall alter or modify Seller's or Buyer's rights, duties and obligations under this Contract. This Contract shall not be construed to create any rights between Seller and the Local Provider.

(C) Subject to Seller's right to self-generate and consume energy concurrently generated by the Facility, Seller may obtain Station Service from the Local Provider. Seller may obtain Station Service back through the Interconnection Facilities to the extent permitted by Applicable Laws, *provided, however,* that the amount of energy received by Seller through the Interconnection Facilities shall not be offset against the amount of Renewable Energy delivered to Buyer at the Point of Delivery for purposes of computing Buyer's obligation to purchase

Renewable Energy. Seller may need to arrange at its own expense with the Interconnection Provider or applicable retail service provider to separately measure Station Service received through the Interconnection Facilities.

1.4. ***Definitions.***

The following terms shall have the meanings set forth herein:

"Abandonment" means the complete relinquishment of all possession and control of the Facility by Seller, other than a transfer permitted under this Contract, but only if such relinquishment is not caused by or attributable to an Event of Default of, or request by, Buyer, or an event of Force Majeure.

"Affiliate" of any named person or entity means any other person or entity that controls, is under the control of, or is under common control with, the named entity. The term "control" (including the terms "controls", "under the control of" and "under common control with") means the possession, directly or indirectly, of the power to direct or cause the direction of the management of the policies of a person or entity, whether through ownership interest, by contract or otherwise.

"Ancillary Services" means those ancillary services (by whatever name) as well as those products deemed to be "Ancillary Services" by PJM and FERC (as of the Effective Date or a future date during the Term) which are associated, directly or indirectly, with the capacity of the Facility or the transmission of energy from the Facility to the Point of Delivery. Such services and energy may include regulation reserve, spinning reserve, non-spinning reserve, operating reserve, voltage support, capacity, and reactive power.

"Applicable Law" means all applicable laws, statutes, treaties, codes, ordinances, regulations, certificates, orders, licenses and permits of any Governmental Authority, now in effect or hereafter enacted, amendments to any of the foregoing, interpretations of any of the foregoing by a Governmental Authority having jurisdiction, and all applicable judicial, administrative, arbitration and regulatory decrees, judgments, injunctions, writs, orders, awards or like actions (including those relating to human health, safety, the natural environment or otherwise).

"Back-Up Metering" shall have the meaning set forth in Section 5.2(C).

"Business Day" means any Day that is not a Saturday, a Sunday, or a NERC recognized holiday.

"Buyer's Portion" means the total Renewable Energy output of the Facility.

"Buyer's Transaction Manager" means the electric transaction manager selected by the Buyer to fulfill the Buyer's PJM-related responsibilities, take and accept Renewable Energy deliveries on behalf of the Buyer pursuant to this Contract, and to deliver the Renewable Energy to the Buyer's retail accounts located in various jurisdictions.

"Capacity" means the output potential a machine or system can produce or carry under specified conditions. The capacity of generating equipment is generally expressed in kilowatts or megawatts. Capacity is also referred to as "capability" in the electric power industry and for the purposes of this Contract the terms are synonymous.

"Close of the Business Day" means 5:00 PM on a non-holiday weekday prevailing time for the location of the Facility.

"Commercial Operation" means the period beginning on the Commercial Operation Date and continuing through the Term of this Contract.

"Commercial Operation Date" or "COD" for the Facility means the date that Seller provides notification to Buyer that the Facility has achieved Commercial Operation, or such other date as is mutually agreed upon by the Parties.

"Commercial Operation Milestone" means the milestone for achievement of the Commercial Operation Date, as may be extended for reasons of Force Majeure or Delay Conditions, which Seller expects to be no later than December 31, 2016.

"Contract" shall have the meaning set forth in the introductory paragraph.

"Damage Cap" shall have the meaning set forth in Section 12.6.

"Day" means a calendar day.

"Day Ahead LMP" means the day ahead market clearing price for renewable energy at the PJM commercial pricing node located at or nearest the Interconnection Point, as such shall be designated or modified by PJM or its successor.

"Delay Conditions" shall have the meaning set forth in Section 14.4.

"Disclosing Party" shall have the meaning set forth in Section 20.16(A).

"Dispute" shall have the meaning set forth in Section 13.9(A).

"Effective Date" shall have the meaning set forth in the introductory paragraph.

"Electric Metering Devices" means the meters, metering equipment and data processing equipment used to measure, record or transmit data relating to the Renewable Energy output from the Facility. Electric Metering Devices include the metering current transformers and the metering voltage transformers.

"Eligible Energy Resource" means any resource that qualifies as a renewable energy resource eligible to be certified to receive, claim, own or use Renewable Energy Credits pursuant to the PJM-GATS Operating Procedures.

"Emergency" means (A) any Emergency Condition (or similar successor term), as defined in the Tariff or the Interconnection Agreement, or (B) a transmission system condition identified by PJM, including a system reliability condition related to endangering life, property or public safety or the ability to maintain safe, adequate, continuous and reliable electric service, and that, in order to achieve the same, a curtailment of the Facility or firm transmission service that reduces or precludes delivery of Renewable Energy to or from the Point of Delivery is required. For the avoidance of doubt, curtailment for reasons of system congestion or low load conditions shall not be deemed to qualify as an Emergency for purposes of this definition.

"Event of Default" shall have the meaning set forth in Article 12.

"Facility" means Seller's electric generating facility and Seller's Interconnection Facilities, as identified and described in Article 3 to this Contract, including all of the following, the purpose of which is to produce electricity and deliver such electricity to the Interconnection Point: Seller's equipment, buildings, all of the generation facilities, including generators, Solar Panels, step-up transformers, output breakers, facilities necessary to connect to the Interconnection Point, protective and associated equipment, improvements, and other tangible assets, contract rights, easements, rights of way, surface use agreements and other interests or rights in real estate reasonably necessary for the construction, operation, and maintenance of the electric

generating facility that produces the Renewable Energy subject to this Contract.

"Facility Financing" means the obligations of Seller to any Facility Financing Party pursuant to the Financing Documents, including principal of, premium and interest on indebtedness, lease payments, fees, expenses or penalties, amounts due upon acceleration, prepayment or restructuring, swap or interest rate hedging breakage costs, return on capital, return of capital, any claims or interest due with respect to any of the foregoing and any amount of cash and tax attributes allocated to Facility Financing Party.

"Facility Financing Party" means, collectively, any parties providing any Facility Financing (including tax equity financing) and any successors or assigns thereto.

"Facility Financing Party Consent or Estoppel" shall have the meaning set forth in Section 19.2.

"FCA" means a Facilities Construction Agreement as required by PJM pursuant to the Tariff.

"FERC" means the Federal Energy Regulatory Commission or any successor agency.

"Financing Documents" means the loan and credit agreements, notes, bonds, indentures, security agreements, lease financing agreements, equity contribution agreements, equity financing documents or other documents relating to equity investments with respect to the Facility, mortgages, deeds of trust, interest rate exchanges, swap agreements and other documents relating to the development, bridge, construction or permanent debt or equity financing for the Facility, including any credit enhancement, credit support, working capital financing, tax equity or refinancing documents, and any and all amendments, modifications, or supplements to the foregoing that may be entered into from time to time at the discretion of Seller in connection with development, construction, ownership, leasing, tax optimization, operation or maintenance of the Facility.

"First Party" shall have the meaning set forth in Article 17.

"Force Majeure" shall have the meaning set forth in Section 14.1(A).

"Forced Outage" means any condition that requires more than fifteen percent (15%) of the total Facility's Capacity to be shutdown from service, another outage state, or a reserve shutdown state. This type of outage results from immediate mechanical/electrical/hydraulic control system trips and operator-initiated trips in response to Facility conditions and/or alarms.

"Generation Unit" shall mean a facility that converts a fuel or an energy resource into electrical energy.

"Good Utility Practices" means the practices, methods, and acts (including the practices, methods, and acts engaged in or approved by a significant portion of the renewable-energy generation industry, RFC or NERC) that, at a particular time, in the exercise of reasonable judgment in light of the facts known or that should reasonably have been known at the time a decision was made, would have been expected to accomplish the desired result in a manner consistent with Applicable Law, permits, codes, standards, equipment manufacturers' requirements and recommendations, reliability, safety, environmental protection, economy, and expedition. Good Utility Practices are not intended to be limited to the optimum practices, methods or acts to the exclusion of others, but rather is intended to include acceptable practices, methods and acts generally accepted in the renewable-energy generation industry. With respect to the Facility, Good Utility Practices includes taking reasonable steps to ensure that:

(A) equipment, materials, resources, and supplies, including spare parts inventories, are available to meet the Facility's needs;

(B) sufficient operating personnel are available at all times and are adequately experienced and

trained and licensed as necessary to operate the Facility properly, efficiently, and in coordination with Buyer and are capable of responding to reasonably foreseeable Emergency conditions whether caused by events on or off the Site;

(C) preventive, routine, and non-routine maintenance and repairs are performed in accordance with manufacturers' recommendations and specifications on a basis that ensures reliable, long-term and safe operation, and are performed by knowledgeable, trained, and experienced personnel utilizing proper equipment and tools;

(D) appropriate monitoring and testing are performed in accordance with manufacturers' recommendations and specifications to ensure equipment is functioning as designed;

(E) equipment is not operated in a negligent manner, in violation of manufacturer's guidelines or in a manner unsafe to workers, the general public, or the interconnected system or contrary to Applicable Law, permits or without regard to defined limitations such as, flood conditions, safety inspection requirements, operating voltage, current, volt-ampere reactive (VAr) loading, frequency, rotational speed, polarity, synchronization, and/or control system limits;

(F) equipment and components meet or exceed the standard of durability that is generally used for electric generation operations in the region and will function properly over the full range of ambient temperature and weather conditions reasonably expected to occur at the Site and under both normal and Emergency conditions; and

(G) equipment is operated in accordance with Solar Panel manufacturer's recommendations and specifications and applicable permits, licenses and Applicable Laws.

"Governmental Authority" means any federal, state, local or municipal governmental body; any governmental, quasi-governmental, regulatory or administrative agency, commission, body or other authority exercising or entitled to exercise any administrative, executive, judicial, legislative, policy, regulatory or taxing authority or power; or any court or governmental tribunal.

"Information" shall have the meaning set forth in Section 20.16(A).

"Initial Term" shall have the meaning set forth in Article 2.

"Interconnection Agreement" means the separate agreement among Seller, Transmission Provider and the Interconnection Provider for interconnection of the Facility to the Interconnection Provider's System, as such agreement may be amended from time to time. For purposes of this Contract, the Interconnection Agreement shall be interpreted to include any temporary or provisional interconnection agreement, FCA or other Agreement required by the Interconnection Provider to interconnect the Facility in accordance with the Tariff.

"Interconnection Facilities" means Interconnection Provider's Interconnection Facilities and Seller's Interconnection Facilities.

"Interconnection Point" means the physical point at which electrical interconnection is made between the Facility and the Interconnection Provider's System, at the high side of the transformer at the Interconnection Provider's 138 kV King's Creek Substation as further described in the Interconnection Agreement and in Exhibit A.

"Interconnection Provider" means Delmarva Power & Light Company or any successor entity that is responsible under the Interconnection Agreement for providing the Interconnection Provider's Interconnection

Facilities and other equipment and facilities with which the Facility interconnects at the Interconnection Point.

"Interconnection Provider's Interconnection Facilities" means the facilities necessary to connect Interconnection Provider's existing electric system to the Interconnection Point, including breakers, bus work, bus relays, and associated equipment installed by the Interconnection Provider for the direct purpose of interconnecting the Facility, along with any easements, rights of way, surface use agreements and other interests or rights in real estate reasonably necessary for the construction, operation and maintenance of such facilities. Arrangements for the installation and operation of the Interconnection Provider's Interconnection Facilities shall be governed by the Interconnection Agreement.

"Interconnection Provider's System" means the contiguously interconnected electric transmission and sub-transmission facilities, including Interconnection Provider's Interconnection Facilities, over which the Interconnection Provider has rights (by ownership or contract) to provide bulk transmission of capacity and energy from the Interconnection Point.

"Investment Tax Credit" means the investment tax credit applicable to electricity produced from certain renewable resources pursuant to 26 U.S.C. Section 48, as amended from time to time.

"kW" means kilowatt.

"kWh" means kilowatt hour.

"Local Provider" shall have the meaning set forth in Section 1.3.

"Market Participant" shall have the meaning set forth in the Operating Agreement of PJM.

"MW" means megawatt or one thousand kW.

"MWh" means megawatt hours.

"Nameplate Capacity" means the designed maximum output of each Generation Unit as designated by the manufacturer, or the sum of such output for the Facility.

"NERC" means the North American Electric Reliability Council or any successor organization.

"New Joint Transmission Authority" means any independent service organization or other Person that may be created or becomes operational subsequent to the Effective Date and that is empowered or authorized to plan, coordinate, operate, regulate or otherwise manage any or all of the Interconnection Provider's system, whether in place of, or in addition to, RFC or PJM.

"Party" and "Parties" shall have the meanings set forth in the introductory paragraph.

"Party Representative" and "Parties' Representatives" shall have the meanings set forth in Section 13.2.

"PJM" means PJM Interconnection, L.L.C., or its successor.

"PJM-GATS" means the PJM Environmental Information Services, Inc. Generation Attribute Tracking System (GATS), or its successor.

"PJM-GATS Operating Procedures" means the operating rules and requirements adopted by PJM-GATS.

"Point of Delivery" means the electric system point at which Seller makes available to Buyer and delivers to Buyer the Renewable Energy being provided by Seller to Buyer under this Contract, which shall be the Point of Interconnection.

"Real Time LMP" means the real time market clearing price for renewable energy at the PJM commercial pricing node located at or nearest the Interconnection Point, as such shall be designated or modified by PJM or its successor.

"Receiving Party" shall have the meaning set forth in Section 20.16(A).

"Renewable Energy" means electric energy exclusively generated by the Facility and delivered to the Point of Delivery as measured by the Electric Metering Devices installed pursuant to Section 5.2. Renewable Energy shall be of a power quality of 60 cycle, three-phase alternating current that is compliant with the Interconnection Agreement. For avoidance of doubt, Renewable Energy shall not include (i) energy self-generated and concurrently consumed by the Facility, (ii) energy losses prior to the Point of Delivery, or (iii) Renewable Energy Credits.

"Renewable Energy Credits" or "RECs" shall mean any contractual or other right to the full set of non-energy attributes associated with Renewable Energy from the Facility, including any and all credits, benefits, emissions reductions, carbon dioxide credits, offsets, and allowances, howsoever entitled, directly attributable to a specific amount of capacity and/or electric energy generated from an Eligible Energy Resource, including any and all environmental air quality credits, benefits, emissions reductions, off-sets, allowances, or other benefits as may be created or under any existing or future statutory or regulatory scheme (federal, state, or local) by virtue of or due to the Facility's actual energy production or the Facility's energy production capability because of the Facility's environmental or renewable characteristics or attributes, including any Renewable Energy Credits or similar rights arising out of or eligible for consideration in the PJM-GATS Program.

"Renewable Energy Payment Rate" shall have the meaning set forth in Section 8.1(B).

"Renewal Term" shall have the meaning set forth in Article 2.

"RFC" means the Reliability First Corporation and its successors in responsibilities and function.

"SCADA" means supervisory control and data acquisition.

"Second Party" shall have the meaning set forth in Article 17.

"Seller's Interconnection Facilities" means the equipment between the high side disconnect of the step-up transformer and the Interconnection Point, including all related relaying protection and physical structures as well as all transmission facilities required to access the Interconnection Provider's System at the Interconnection Point, along with any easements, rights of way, surface use agreements and other interests or rights in real estate reasonably necessary for the construction, operation and maintenance of such facilities. On the low side of the step-up transformer it includes Seller's metering, relays, and load control equipment as provided for in the Interconnection Agreement. This equipment is located on or about the Site.

"Site" means the parcel of real property on which the Facility will be constructed and located, including any easements, rights of way, surface use agreements and other interests or rights in real estate reasonably necessary for the construction, operation and maintenance of the Facility. The Site is more specifically described in Section 3.2.

"Solar Panels" means those electric generating devices powered by the sun that are included in the Facility.

"Station Service" shall have the meaning set forth in Section 1.3.

"Tariff" means the PJM Open Access Transmission Tariff, Reliability Assurance Agreement, and the PJM Operating Agreement, as revised from time to time.

"Tax Attributes" means (i) any local, state or federal depreciation deductions or other tax credits or cash grants providing a tax or cash benefit to Seller based on ownership of, or energy production from, any portion of the Facility, including the Investment Tax Credit, and United States Treasury Cash Grant that may be available to Seller with respect to the Facility under Applicable Laws, and (ii) depreciation and other tax benefits arising from ownership or operation of the Facility.

"Term" means the period of time during which this Contract shall remain in full force and effect, and which is further defined in Article 2.

"Test Energy" means that energy which is produced by the Facility prior to Commercial Operation, delivered to Buyer at the Point of Delivery, and purchased by Buyer, pursuant to Section 4.2, which is necessary in order to perform all testing of the Facility or otherwise produced by the Facility and delivered to the Point of Delivery prior to the COD.

"Transmission Provider" means PJM or any successor entity.

Article 2. Term and Termination

This Contract shall become effective as of the Effective Date, and shall remain in full force and effect until midnight local Facility time on the tenth (10th) anniversary of the COD (the "Initial Term"), subject to any early termination or extension provisions set forth herein. After the Initial Term, Buyer may renew the Contract for an additional ten (10) year term (the "Renewal Term") commencing upon the expiration of the Initial Term and subject to any early termination provisions set forth herein, upon a written notice of renewal to Seller at least one hundred and eighty (180) days prior to the expiration of the Initial Term. The Initial Term and the subsequent Renewal Term, if any, are referred to collectively as the "Term." Applicable provisions of this Contract shall continue in effect after termination, including early termination, to the extent necessary to enforce or complete the duties, obligations or responsibilities of the Parties arising prior to termination and, as applicable, to provide for: final billings and adjustments related to the period prior to termination, repayment of any money due and owing to either Party pursuant to this Contract and the indemnifications specified in this Contract.

Article 3. Facility Description

3.1. *Summary Description*

Seller shall construct, own, operate, and maintain the Facility, which shall consist of Solar Panels and associated equipment having a Facility Nameplate Capacity of approximately 75 MW (AC).

3.2. *Location.*

The Facility shall be identified as Seller's Great Bay Solar Project. The address of the Facility will be in or about the Site in Somerset County, Maryland. A scaled map that identifies the location of Interconnection Point is included in Exhibit A to this Contract. If not done so already, after finalizing Seller's interconnection plans, Seller shall send a written notice to Buyer specifying the identity of the point that is to be used as the Interconnection Point for this Contract.

Article 4. Commercial Operation

4.1. *Commercial Operation*

Seller shall provide Buyer with at least one hundred twenty (120) Days' advance notice of the anticipated Commercial Operation Date of the Facility. Seller shall also notify Buyer in writing when the Facility has achieved Commercial Operation.

4.2. *Test Energy*

(A) Seller shall provide PJM with the information necessary to have the Facility registered in the PJM network model, sufficiently in advance to allow the Facility to be registered in such model prior to generating any Test Energy.

(B) Seller shall coordinate the production and delivery of Test Energy with Buyer and/or Buyer's Transaction Manager, with not less than five (5) Days written notice. Buyer and/or Buyer's Transaction Manager shall cooperate in a timely manner with Seller to facilitate Seller's testing of the Facility necessary to achieve Commercial Operation. Buyer shall purchase Buyer's Portion of all Test Energy delivered to the Point of Delivery at a payment rate equal to seventy-five percent (75%) of the Renewable Energy Payment Rate applicable as of the Commercial Operation Date.

Article 5. Delivery and Metering

5.1. *Delivery Arrangements*

(A)The Interconnection Point shall be as specified in the Interconnection Agreement for the Facility and Exhibit A and shall be a point within the operational authority of PJM and is subject to the Tariff. Seller shall be responsible for making, maintaining and paying the costs associated with the interconnection requests with PJM for interconnecting the Facility to the Interconnection Provider's System.

(B) Seller shall be responsible for all interconnection, electric losses, transmission and ancillary service arrangements and costs required to deliver Buyer's Portion of the Renewable Energy and Test Energy from the Facility to Buyer at the Point of Delivery.

(C) Buyer shall be responsible for all electric losses, transmission and other service arrangements and all other costs required to deliver Buyer's Portion of the Renewable Energy and Test Energy to points beyond the Point of Delivery.

5.2. *Electric Metering Devices.*

(A)The following provisions of this Section shall govern Electric Metering Devices except to the extent the Interconnection Agreement modifies or otherwise conflicts with these provisions.

(B) All Electric Metering Devices used to measure the Renewable Energy made available to Buyer by Seller under this Contract and to monitor and coordinate operation of the Facility shall

be owned, installed, and maintained in accordance with the Interconnection Agreement at no cost to Buyer under this Contract. In the event the Electric Metering Devices cannot be installed at the Point of Delivery, Buyer and Seller will agree on adjustments to meter readings to reflect losses from where the Electric Metering Devices are installed to the Point of Delivery, provided that either Buyer or Seller may request revision and further agreement between the Parties as to this loss adjustment if Buyer or Seller at any time reasonably believe the loss adjustment to be erroneous. Seller shall provide or arrange with the Interconnection Provider to provide Buyer access to all Electric Metering Devices for all purposes necessary to perform under this Contract and shall provide Buyer the reasonable opportunity to be present at any time when such Electric Metering Devices are to be inspected and tested or adjusted. Seller shall provide Buyer with all authorizations necessary to have access to the Electric Metering Devices, including obtaining any consent or other agreement from the Interconnection Provider necessary to allow Buyer such access.

(C)Either Buyer or Seller may elect to install and maintain, at its own expense, back-up metering devices ("Back-Up Metering") in addition to the Electric Metering Devices, which installation and maintenance shall be performed in a manner acceptable to Buyer. The installing Party, at its own expense, shall inspect and test Back-Up Metering upon installation and at least annually thereafter. The installing Party shall provide the other Party with reasonable advance notice of, and permit a representative of the other Party to witness and verify, such inspections and tests, *provided, however,* that such Party shall not unreasonably interfere with or disrupt the activities of the installing Party and shall comply with all applicable safety standards. Upon reasonable written request, the installing Party shall perform additional inspections or tests of Back-Up Metering and shall permit a qualified representative of the requesting Party to inspect or witness the testing of Back-Up Metering, *provided, however*, that the requesting Party shall not unreasonably interfere with or disrupt the activities of the installing Party and shall comply with all applicable safety standards. The actual expense of any such requested additional inspection or testing shall be borne by the Party requesting the test, unless, upon such inspection or testing, Back-Up Metering is found to register inaccurately by more than the allowable limits established in this Article 5, in which event the expense of the requested additional inspection or testing shall be borne by the installing Party. If reasonably requested in writing, the installing Party shall provide copies of any inspection or testing reports to the requesting Party.

(D)If any Electric Metering Devices, or Back-Up Metering, are found to be defective or inaccurate outside the bounds of the selected device's manufacturer's performance standards, they shall be adjusted, repaired, replaced, and/or recalibrated as near as practicable to a condition of zero error by the Party owning such defective or inaccurate device and at that Party's expense.

5.3. *Adjustment for Inaccurate Meters*

If an Electric Metering Device, or Back-Up Metering, fails to register, or if the measurement made by an Electric Metering Device, or Back-Up Metering, is found upon testing to be inaccurate by more than one percent (1.0%), an adjustment shall be made correcting all measurements by the inaccurate or defective Electric Metering Device, or Back-Up Metering, for both the amount of the inaccuracy and the period of the inaccuracy, in the following manner:

(A)In the event that the Electric Metering Device is found to be defective or inaccurate, the Parties shall use Back-up Metering, if installed, to determine the amount of such inaccuracy, *provided, however*, that Back-Up Metering has been tested and maintained in accordance with the provisions of Article 5.. If Back-Up Metering is installed on the low side of Seller's step-up transformer, the Back-Up Metering data shall be adjusted for losses in the same manner as for the Electric Metering Devices. In the event that Back-Up Metering is not installed, or Back-Up Metering is also found to be inaccurate by more than one percent (1.0%), the Parties shall use the

SCADA data collected at each Generation Unit in the Facility for the period of inaccuracy, adjusted as agreed by the Parties for losses occurring between each Seller and the Point of Delivery. If such SCADA data is incomplete or unavailable, the Parties shall estimate the amount of the necessary adjustment on the basis of deliveries of Renewable Energy from the Facility and to the Point of Delivery during periods of similar operating conditions when the Electric Metering Device was registering accurately. The adjustment shall be made for the period during which inaccurate measurements were made.

(B) In the event that the Parties cannot agree on the actual period during which the inaccurate measurements were made, the period during which the measurements are to be adjusted shall be the shorter of (i) the last one-half of the period from the last previous test of the Electric Metering Device to the test that found the Electric Metering Device to be defective or inaccurate, or (ii) the one hundred eighty (180) Days immediately preceding the test that found the Electric Metering Device to be defective or inaccurate.

(C) To the extent that the adjustment period covers a period of deliveries for which payment has already been made by Buyer, Buyer shall use the corrected measurements as determined in accordance with this Article 5 to recompute the amount due for the period of the inaccuracy and shall subtract the previous payments made by Buyer for this period from such re-computed amount. If the difference is a positive number, the difference shall be paid by Buyer to Seller; if the difference is a negative number, that absolute value of the difference shall be paid by Seller to Buyer, or at the discretion of Buyer, may take the form of an offset to payments due Seller by Buyer. Payment of such difference by the owing Party shall be made not later than thirty (30) Days after the owing Party receives notice of the amount due, unless Buyer elects payment via an offset.

Article 6. Conditions Precedent

6.1. *Seller's Conditions Precedent.*

Notwithstanding any provision of this Contract to the contrary, Seller shall have the right, unless waived by Seller, to terminate this Contract, without any further financial or other obligations to Buyer as a result of such termination, by notice to Buyer (i) on or before February 15, 2016, in the event Seller, Interconnection Provider, and PJM fail to execute an Interconnection Agreement satisfactory to Seller, after Seller exercising its commercially reasonable efforts to negotiate such an Interconnection Agreement; and/or (ii) on or before February 15, 2016, in the event Seller is unable to obtain binding commitments from a Facility Financing Party with respect to financing the construction of the Facility, after Seller exercising its commercially reasonable efforts to obtain such financing. Absent such notice of termination by Seller on or before February 15, 2016, Seller shall be deemed to have waived its rights under this Section, and this Contract shall remain in full force and effect thereafter.

Article 7. Sale and Purchase of Renewable Energy

7.1. *Sale and Purchase*

Beginning on the Commercial Operation Date, Seller shall generate from the Facility, deliver to the Point of Delivery, and sell to Buyer, at the Renewable Energy Payment Rate, Buyer's Portion of the Renewable Energy generated by the Facility.

7.2. *Title and Risk of Loss*

As between the Parties, Seller shall be deemed to be in control of the Renewable Energy and Test Energy output from the Facility up to and until delivery and receipt at the Point of Delivery and Buyer shall be deemed to be in control of such energy at, from and after delivery and receipt at the Point of Delivery. Title and risk of loss related to Buyer's Portion of the Renewable Energy and Test Energy shall transfer from Seller to Buyer at the Point of Delivery.

7.3. *Market Participant*

Throughout the term of this Contract, Seller shall either (i) be a member of PJM and be qualified as a PJM "Market Seller" pursuant to the Tariff; or (ii) have entered into an agreement with a Market Participant that will perform all of Seller's PJM-related obligations in connection with the Facility and this Contract.

7.4. *Scheduling and Cooperation*

Seller agrees to cooperate with Buyer or Buyer's Transaction Manager with respect to the scheduling of delivery of the Renewable Energy and Test Energy hereunder so that potential PJM penalties and similar charges may be reduced; provided, however, that such cooperation shall not (i) reduce or adversely affect Seller's ability or rights to deliver Renewable Energy or Test Energy to the Point of Delivery or Buyer's obligation to accept and pay for same; (ii) require Seller to incur any costs and expenses; and (iii) cause any increase in electrical line losses for the Facility.

7.5. *Real-Time Locational Margin Price*

Buyer's Portion of Renewable Energy shall be transferred to Buyer or Buyer's Transaction Manager via bilateral transactions scheduled through PJM's "InSchedule" system or its successor or replacement systems. Seller shall schedule Buyer's Portion of Renewable Energy to be delivered to Buyer at the Day Ahead LMP.

In the event all or a portion of Buyer's Portion of the Renewable Energy is not transferred via bilateral transaction via such system, as reasonably determined to be due to an error or omission by Seller, Seller shall provide Buyer with a credit for such applicable portion of Buyer's Portion of the Renewable Energy that was not so transferred (in MWh), multiplied by the applicable Real Time LMP for the Point of Delivery (regardless of whether such Renewable Energy was sold into PJM's Day Ahead or Real Time Market).

Article 8. Payment Calculations

8.1. *Energy Payment Rate*

(A)Prior to the Commercial Operation Date, Buyer shall pay Seller for Test Energy delivered to the Buyer by Seller to the Point of Delivery at the rate set forth in Section 4.2(B).

(B)Commencing on the Commercial Operation Date of the Facility, Buyer shall pay Seller for Buyer's Portion of the Renewable Energy delivered to Buyer by Seller to the Point of Delivery at a price equal to the then applicable rate set forth in Exhibit D ("Renewable Energy Payment Rate").

Article 9. Billing and Payment

9.1. *Billing Invoices*

The billing period under this Contract shall be the calendar month. Invoices and bills under this Contract will be paid through Buyer's Transaction Manager, who will act as Buyer's agent with respect thereto.

No later than ten (10) Days after the end of each month (or if such 10th Day falls on a non-Business Day, the next Business Day thereafter), Seller shall provide to Buyer's Transaction Manager electronically, a statement showing the payment amount due Seller by Buyer for the power provided by Seller and purchased by Buyer under this Contract, during the previous calendar month billing period. The statement will show metered energy from the Facility and any other data reasonably pertinent to the calculation of monthly payments due to Seller. The statement will also include any other credits, charges and liabilities due pursuant to the terms of this Contract, including any adjustments and outstanding amounts due pursuant to prior invoices. All invoices delivered pursuant to this Contract shall be subject to adjustment, at the written request of a Party to the other Party hereunder during the twelve (12) month period following the date of such invoice, to resolve and correct any errors in computation, metering or to correct other material issues. If Buyer or Buyer's Transaction Manager disputes any amount in the statement provided by Seller, Buyer shall promptly notify Seller in writing with an explanation of the items in dispute, as well as all supporting documentation upon which Buyer relies to dispute the Seller statement. Billing disputes shall be resolved in accordance with Section 9.5.

9.2. *Metered Billing Data*

All billing data based on metered deliveries to Buyer shall be collected by the Electric Metering Device(s) in accordance with Section 5.2.

9.3. *Compensation for Ancillary Services*

The Parties recognize that Seller's obligation to provide reactive power service from the Facility to Interconnection Provider's System and any compensation Seller receives for reactive power service is to be set forth in the Interconnection Agreement. The Parties agree that Seller shall be entitled to any and all compensation for the provision of Ancillary Services from the Facility during the Term of this Contract. In the event that Buyer receives any such compensation, or in the event that Buyer's Transaction Manager receives any such compensation, Buyer agrees that it shall, and/or shall cause Buyer's Transaction Manager to, promptly forward and pay to Seller an amount equal to such compensation. The Parties further agree that Seller shall be responsible for all costs, expenses and charges directly related to providing such Ancillary Services.

9.4. *Payments*

Payments due to Seller under this Contract shall be due and payable by electronic funds transfer, or by wire transfer, as designated by the Seller, on or before the thirtieth (30th) Day following Buyer's Transaction Manager's receipt of Seller's billing invoice. If the amount due on such invoice is not paid on or before the due date described in the prior sentence by Buyer's Transaction Manager, a late payment charge shall be applied to the unpaid balance and shall be added to the next invoice. Such late payment charge shall be calculated based on an annual interest rate consistent with the Payment Act (31 U.S.C. §§ 3901-3909) and effective in the month in which the invoice is rendered.

9.5. *Billing Disputes*

Either Party may dispute invoiced amounts, but shall pay to the other Party at least the undisputed portion of invoiced amounts on or before the invoice due date. To resolve any billing dispute, the Parties shall use the procedures set forth in Section 13.9. When the billing dispute is resolved, the Party owing shall pay the amount owed within five (5) Business Days of the date of such resolution, with late payment interest charges calculated on the amount owed in accordance with the provisions of Section 9.4.

9.6. *Designation of Buyer's Transaction Manager*

At least sixty (60) days prior to the initiation of deliveries under this Contract, the Buyer shall designate and identify, by written notice to Seller, the party that will serve as Buyer's Transaction Manager hereunder and

with respect to Buyer's Market Participant responsibilities. The Buyer's Transaction Manager will be a PJM Member and will have the necessary capability to receive physical energy and RECs produced by Seller under this Contract.

9.7. *Buyer Responsibility for Bill Payment*

Notwithstanding the agreement of the Parties that Buyer's payments to Seller under this Contract may be made by and through Buyer's Transaction Manager, Buyer shall remain primarily responsible for the payment of all amounts due to Seller hereunder. In addition to Seller's other remedies set forth in this Contract, in the event Seller remains unpaid or unreimbursed by Buyer's Transaction Manager for any amount due under this Contract for a period exceeding sixty (60) Days, the Seller may directly request payment and/or reimbursement directly from Buyer for such unpaid amounts and Buyer agrees to pay Seller such unpaid amounts and accrued interest within thirty (30) Days following receipt of such notice from Seller, with late payment interest charges calculated on the amount owed in accordance with the provisions of Section 9.4.

Article 10. Operations and Maintenance

10.1. *Facility Operation*

Seller shall comply with equipment manufacturers' requirements and recommendations, Applicable Law and Good Utility Practices in the operation of the Facility as well as the requirements of PJM, RFC and any New Joint Transmission Authority. Personnel capable of starting, running and stopping the Facility shall be available in accordance with Good Utility Practices.

10.2. *Outage and Performance Reporting*

(A)Seller shall comply with all current Buyer, NERC, RFC, and PJM generating unit outage reporting requirements and reliability standards, as they may be revised from time to time, and as they apply to the Facility. Seller shall comply with applicable PJM reporting requirements regarding unit availability, Solar Panel locations, etc. as they may be revised from time to time; *provided* that any material costs incurred by Seller as a result of Buyer's requirements being more stringent than the NERC, RFC, and PJM requirements shall be reimbursed by Buyer.

(B) When Forced Outages occur, Seller shall notify Buyer of the existence, nature, and expected duration of the Forced Outage as soon as practical, but in no event later than thirty (30) minutes after the Forced Outage occurs. Seller shall inform of changes in the expected duration of the Forced Outage unless relieved of this obligation by Buyer for the duration of each Forced Outage.

10.3. *Access to Facility*

Appropriate representatives of Buyer shall at all reasonable times, and with reasonable prior notice and following receipt of the written consent of Seller, have access to the Facility to read meters and to perform all inspections, maintenance, service, and operational reviews as is reasonably appropriate to facilitate the performance of this Contract. While at the Facility, such representatives shall observe such reasonable safety precautions as may be required by Seller, and shall conduct themselves in a manner that will not interfere with the operation of the Facility and in accordance with Seller's applicable safety, insurance and liability release requirements, which shall be in substance and forms reasonably acceptable to Seller.

10.4. *Reliability Standards*

Seller shall operate the Facility in a manner that complies with all national and regional reliability standards, including standards set by NERC, FERC, and RFC, or any successor agencies setting reliability standards for the operation of generation facilities. To the extent that Seller or the Facility contributes directly (in whole or in part) to actions that result in monetary penalties being assessed to Buyer by NERC, RFC, or any successor

agency, for lack of compliance with reliability standards, Seller shall reimburse Buyer for its share of such monetary penalties.

10.5.*RECs and Tax Attributes*

(A)The Parties acknowledge that Applicable Laws in Maryland and elsewhere create and future Applicable Laws may create value in the ownership, use or allocation of RECs. Seller shall retain ownership and be entitled to claim all RECs to the extent such credits may exist or be created during the Term (including RECs generated in connection with respect to Test Energy).

(B) As between the Parties, Seller shall retain and be entitled to all Tax Attributes with respect to the Facility.

Article 11. **[*Intentionally Omitted*]**

Article 12. **Default and Remedies**

12.1.*Events of Default of Seller*

(A)Any of the following shall constitute an Event of Default of Seller upon its occurrence and no cure period shall be applicable:

1. Seller's dissolution or liquidation;

2. Seller's assignment of this Contract or any of its rights hereunder for the benefit of creditors (except for an assignment to the Facility Financing Party as security under the Financing Documents as permitted by this Contract); and/or

3. Seller's filing of a petition in voluntary bankruptcy or insolvency or for reorganization or arrangement under the bankruptcy laws of the United States or under any insolvency act of any state, or Seller voluntarily taking advantage of any such law or act by answer or otherwise.

(B) Any of the following shall constitute an Event of Default of Seller upon its occurrence but shall be subject to cure within thirty (30) Days after the date of written notice from Buyer to Seller and the Facility Financing Party:

1. Seller's Abandonment of construction or operation of the Facility; and/or

2. Seller's failure to make any payment due to Buyer under or in connection with this Contract.

3. Seller's intentional failure to deliver Renewable Energy in accordance with Section 7.1.

(C)Any of the following shall constitute an Event of Default of Seller upon its occurrence but shall be subject to cure within sixty (60) Days after the date of written notice from Buyer to Seller and the Facility Financing Party:

1. Any representation or warranty made by Seller in this Contract shall prove to have been false or misleading in any material respect when made; and/or

2. The filing of an involuntary case in bankruptcy or any proceeding under any other insolvency law against Seller as debtor or its parent or any other Affiliate that would materially impact Seller's ability to perform its obligations hereunder;

provided, however, that Seller does not obtain a stay or dismissal of the filing within the cure period.

12.2.*Facility Financing Party's Right to Cure Default of Seller*

Seller shall provide Buyer with a notice identifying the Facility Financing Party and providing appropriate contact information for the Facility Financing Party. Following receipt of such notice, Buyer shall provide notice of any Event of Default of Seller to the Facility Financing Party, and Buyer will accept a cure to an Event of Default of Seller performed by the Facility Financing Party so long as a cure of the Event of Default is expressly permitted under the terms of this Contract and the cure is accomplished within the latter to occur of (i) thirty days following expiry of the cure period, if any, provided to Buyer under Section 12.1(B) or (ii) sixty (60) days following notice to the Seller and the Facility Financing Party under Section 12.1(C).

12.3.*Events of Default of Buyer*

(A)Any of the following shall constitute an Event of Default of Buyer upon its occurrence but shall be subject to cure within thirty (30) Days after the date of written notice from Seller to Buyer:

1. Buyer's failure to make any payment due hereunder for any reason, including the failure of adequate amounts to be appropriated therefor (subject to Buyer's rights with respect to disputed payments under Section 9.5).

(B)Any of the following shall constitute an Event of Default of Buyer upon its occurrence but shall be subject to cure within sixty (60) Days after the date of written notice from Seller to Buyer:

2. Any representation or warranty made by Buyer in this Contract shall prove to have been false or misleading in any material respect when made.

12.4.*Damages Prior to Termination*

Upon the occurrence of an Event of Default, and subject in the case of any Event of Default by Seller to the Damage Cap set forth in Section 12.6, the non-defaulting Party shall have the right (without terminating this Contract) to collect damages accruing prior to the termination of this Contract from the defaulting Party as set forth below, and the payment of any such damages accruing prior to the cure of an Event of Default shall constitute part or all of the cure, as applicable. For all Events of Default described in Section 12.1 and 12.3, the non-defaulting Party shall be entitled to receive from the defaulting Party all of the damages incurred by the non-defaulting Party in connection with such Event of Default; *provided, however,* that if an Event of Default has occurred and has continued uncured for a period of three hundred sixty-five (365) Days, the non-defaulting Party shall be required to either waive its right to collect damages beyond such three hundred sixty-five (365) Day period on account of such Event of Default or elect to terminate this Contract as provided for in Section 12.5.

12.5.*Termination*

Upon the occurrence of an Event of Default which has not been cured within the applicable cure period, the non-defaulting Party shall have the right to declare a date, which shall be between fifteen (15) and thirty (30) Days after the notice thereof, upon which this Contract shall terminate. Neither Party shall have the right to terminate this Contract except as provided for upon the occurrence of an Event of Default and expiration of the applicable cure period as described above or as otherwise may be explicitly provided for in this Contract, including if a Condition Precedent under Article 6 is not satisfied. If a Party's Condition Precedent under Article 6 is not satisfied or is not waived by such Party, such Party may terminate this Contract upon written notice to the other Party, this Contract shall become null and void and neither Party shall pay damages to the other Party. Upon the termination of this Contract under this Section 12.5, the non-defaulting Party shall be

entitled to receive from the defaulting Party, subject in the case of an Event of Default by Seller to the Damage Cap set forth in Section 12.6, all of the damages incurred by the non-defaulting Party in connection with such termination. In the case where Buyer is the defaulting Party, Seller shall be entitled to recover a termination payment calculated in accordance with Section 12.11.

12.6.*Limitation on Damages*

Seller's aggregate financial liability to Buyer for all damages shall not exceed an amount equal to $100/kW x Buyer's Portion of the Facility Nameplate Capacity (the "Damage Cap"). If at any time during the Term, Seller incurs liability to Buyer in excess of the Damage Cap that Seller does not agree to pay when billed by Buyer in accordance with Section 12.9, Buyer shall have the right to declare a termination of this Contract under Section 12.5 (with no further liability for either Party) following thirty (30) Days' written notice to Seller.

12.7.*Remedies Cumulative*

Subject to the Damage Cap, each right or remedy of the Parties provided for in this Contract shall be cumulative of and shall be in addition to every other right or remedy provided for in this Contract at law and in equity, and the exercise, or the beginning of the exercise, by a Party of any one or more or the rights or remedies provided for herein shall not preclude the simultaneous or later exercise by such Party of any or all other rights or remedies provided for herein.

12.8.*No Consequential Damages*

Except as described in Section 12.11, in no event shall either Party be liable for the other Party's alleged lost profits or other consequential damages; *provided, however*, that any amounts which are expressly provided herein to be payable shall not be construed as lost profits or consequential damages.

12.9.*Payment of Amounts Due*

Without limiting any other provisions of this Article 12 and at any time before or after termination of this Contract, either Party may send the other Party an invoice for such damages or other amounts as are due to the invoicing Party at such time under this Contract and such invoice shall be payable in the manner, and in accordance with the applicable provisions, set forth in Article 9, including the provision for late payment charges.

12.10. *Duty to Mitigate*

Each Party agrees that it has a duty to mitigate damages and covenants that it will use commercially reasonable efforts to minimize any damages it may incur as a result of the other Party's performance or non-performance of the Contract.

12.11. *Termination for Convenience.*

In the event Buyer terminates this Contract for any reason other than based upon an Event of Default of Seller hereunder, then Buyer shall pay Seller a termination payment equal to the then-applicable remaining net present economic value to Seller of this Contract (net of any agreement or market opportunity on Seller's behalf to sell power from the Facility to a third party for the remainder of the Term), which shall be calculated by Seller, in good faith, using a commercially reasonable discount rate and taking the following factors into account: (i) the average net capacity factor for the Facility during the Term of this Contract up to the effective date of such termination, as reasonably determined by Seller, and verified by Buyer, (ii) Buyer's Portion of the total Facility output, (iii) the Renewable Energy Payment Rate, and (iv) the total remaining Term of the Contract as of the effective date of such termination. Buyer shall pay such termination payment amount to Seller within ten (10) Business Days following Seller's delivery of written notice to Buyer of the termination payment amount and Seller's calculation thereof.

Article 13. Contract Administration and Notices

13.1.*Notices in Writing*

Notices required by this Contract shall be addressed to the other Party at the addresses noted in Exhibit B as either Party updates them from time to time by written notice to the other Party. Any notice, request, consent, or other communication required or authorized under this Contract to be given by one Party to the other Party shall be in writing. It shall either be hand delivered or mailed, postage prepaid, to the representative of said other Party. If mailed, the notice, request, consent or other communication shall be simultaneously sent by other electronic means. Any such notice, request, consent, or other communication shall be deemed to have been received by the Close of the Business Day on which it was hand delivered or transmitted electronically (unless hand delivered or transmitted after such close in which case it shall be deemed received at the close of the next Business Day). Real-time or routine communications concerning Facility operations shall be exempt from this Section.

13.2.*Representative for Notices*

Each Party shall maintain a designated representative to receive notices ("Party Representative"). Either Party may, by written notice to the other Party, change its Party Representative or the address to which such notices and communications are to be sent.

13.3.*Authority of Representatives*

The Party Representatives designated above shall have authority to act for their respective principals in all technical matters relating to performance of this Contract and to attempt to resolve disputes or potential disputes. However, they, in their capacity as representatives, shall not have the authority to amend or modify any provision of this Contract.

13.4.*Operating Records*

Seller and Buyer shall each keep complete and accurate records and all other data required by each of them for the purposes of proper administration of this Contract, including such records as may be required by Governmental Authorities, PJM, NERC or RFC as applicable.

13.5.*Operating Log*

Seller shall maintain an accurate and up-to-date operating log, in electronic format, at the Facility or Seller's offices with records of production for each clock hour; changes in operating status; and Forced Outages for the purposes of proper administration of this Contract, including such records as may be required by state or federal regulatory authorities and RFC in the prescribed format.

13.6.*[Intentionally Omitted]*

13.7.*Billing and Payment Records*

To facilitate payment and verification, Seller and Buyer (and/or Buyer's Transaction Manager on behalf of Buyer) shall keep all books and records necessary for billing and payments in accordance with the provisions of Article 9 and grant the other Party reasonable access to those records. All records of Seller pertaining to the operation of a Facility shall be maintained on the premises of the Facility.

13.8.*Exhibits*

Either Party may change the information for their notice addresses in Exhibit B at any time without the approval of the other Party. All other Exhibits may be changed to the extent allowed by specific provisions of this Contract or with the mutual consent of both Parties.

13.9.*Dispute Resolution*

(A)The Parties shall make a good faith effort to negotiate a resolution of disputes or issues between the Parties under this Contract (a "Dispute") before initiating litigation. If either Party has a Dispute, it shall send written notice of the Dispute to the other Party. During a Dispute, the Parties shall continue performance under this Contract pending resolution of the Dispute, unless to do so would be impossible. Seller reserves the right to seek judicial resolution of any Dispute arising under this Contract that is not subject to arbitration under this Section 13.9.

(B)In accordance with FAR Clause 52.212-4(d), this Contract is subject to the Contract Disputes Act of 1978, as amended (41 U.S.C. 601-613). Failure of the Parties to reach agreement on any request for equitable adjustment, claim, appeal or action arising under or relating to this Contract shall be a Dispute to be resolved in accordance with the clause at FAR 52.233-1, Disputes, which is incorporated herein by reference. The Parties shall proceed diligently with performance of this Contract, pending final resolution of any such Dispute.

Article 14. Force Majeure

14.1.*Definition of Force Majeure*

(A)The term "Force Majeure", as used in this Contract, means causes or events beyond the reasonable control of, and without the fault or negligence of the Party claiming Force Majeure, which by exercise of due diligence and reasonable foresight could not reasonably have been avoided, including (i) acts of God; (ii) sudden actions of the elements, such as floods, earthquakes, hurricanes or tornadoes, lightning, ice storms, high winds of sufficient strength or duration to materially damage a facility or significantly impair its operation for a period of time longer than normally encountered in similar businesses under comparable circumstances; (iii) serial manufacturing and/or design defects in the power-generating units or other major components comprising the Facility only in the event and to the extent that such occurrence is established to constitute a serial defect under Seller's Solar Panel supply agreement or construction contract for the Facility; (v) fire, sabotage, vandalism beyond that which could reasonably be prevented by Seller; terrorism; war; riots; fire; explosion; blockades; insurrection; (vi) actions or inactions by any Governmental Authority taken after the date hereof (including the adoption or change in any Applicable Laws imposed by such Governmental Authority), but only if such requirements, actions, or failures to act prevent or delay performance on commercially reasonable terms; and (vii) inability, despite due diligence, to obtain any licenses, permits, or approvals required by any Governmental Authority.

(B)Notwithstanding the foregoing, the term Force Majeure does not include (i) inability by Seller to procure Solar Panels or any component parts, for any reason (the risk of which is assumed by Seller), (ii) any other acts or omissions of any third party, including any vendor, materialmen, customer, or supplier of Seller (except failure of the Interconnection Provider (transmission owner) to complete all network upgrades (through no fault of Seller) necessary to deliver Renewable Energy to the Point of Delivery), unless such acts or omissions are themselves excused by reason of Force Majeure; (iii) any full or partial curtailment in the electric output of the Facility that is caused by or arises from a mechanical or equipment breakdown or other mishaps, events or conditions attributable to normal wear and tear or flaws, unless such acts or

omissions are themselves excused by reason of Force Majeure; (iv) failure to abide by Good Utility Practices, (v) changes in market conditions that affect the cost of Seller's supplies, or that affect demand or price for power and/or RECs; (vi) any labor strikes, slowdowns or stoppages, or other labor disruptions against Seller or Seller's contractors or subcontractors (unless any such events are national in scale); or (vii) foreseeable disruptions to the Facility caused by weather events typically experienced in the region of the country where the Facility is located, but excluding events and actions listed under Section 14.1(A)(ii) above.

14.2.*Applicability of Force Majeure*

(A)Neither Party shall be responsible or liable for any delay or failure in its performance under this Contract, nor shall any delay, failure, or other occurrence or event become an Event of Default, to the extent such delay, failure, occurrence or event is substantially caused by conditions or events of Force Majeure, *provided, however,* that:

1. the non-performing Party gives the other Party prompt written notice describing, in reasonable detail, the particulars of the occurrence of the Force Majeure;

2. the suspension of performance is of no greater scope and of no longer duration than is required by the Force Majeure;

3. the non-performing Party proceeds with reasonable diligence to remedy its inability to perform and provides weekly progress reports to the other Party describing actions taken to end the Force Majeure; and

4. when the non-performing Party is able to resume performance of its obligations under this Contract, that Party shall give the other Party written notice to that effect.

(B)Except as otherwise expressly provided for in this Contract, the existence of a condition or event of Force Majeure shall not relieve the Parties of their obligations under this Contract (including payment obligations) to the extent that performance of such obligations is not precluded by the condition or event of Force Majeure.

14.3.*Limitations on Effect of Force Majeure*

In no event will any delay or failure of performance caused by any conditions or events of Force Majeure extend this Contract beyond the end of the Term. In the event that any delay or failure of performance caused by conditions or events of Force Majeure affecting Seller continues for an uninterrupted period of three hundred sixty-five (365) Days from its inception, either Party may, at any time following the end of such period, terminate this Contract upon written notice to the other Party, without further obligation by either Party except as to costs and balances incurred prior to the effective date of such termination, unless the Party not calling for termination can demonstrate within ninety (90) Days following the receipt of written notice of such termination, that it has a plan to resolve the Force Majeure.

14.4.*Delays Attributable to Buyer*

Seller shall be excused from a failure to meet the Commercial Operation Milestone where Seller can establish that such a failure is principally attributable to any delay or failure by Buyer in obtaining any consents or approvals from Governmental Authorities or third parties required for Buyer to perform its obligations under this Contract whether or not caused by any conditions or events of Force Majeure ("Delay Conditions"). In the event of such a failure, the Commercial Operation Milestone shall be extended for a period of time equal to the period in which such Delay Conditions existed; *provided* that the Commercial Operation Milestone shall

be extended beyond the period of time described above if Seller reasonably demonstrates that additional time is required to re-mobilize the construction crew and equipment to the Site.

Article 15. Representations, Warranties and Covenants

15.1.*Seller's Representations, Warranties and Covenants*

Seller hereby represents and warrants to Buyer as follows:

(A)Seller is a limited liability company duly organized, validly existing and in good standing under the laws of the State of Maryland. Seller is qualified to do business in each other jurisdiction where the failure to so qualify would have a material adverse effect on the business or financial condition of Seller; and Seller has all requisite power and authority to conduct its business, to own its properties, and to execute, deliver, and perform its obligations under this Contract.

(B)The execution, delivery, and performance of its obligations under this Contract by Seller have been duly authorized by all necessary corporate action, and do not:

1. require any consent or approval by any governing body of Seller, other than that which has been obtained and is in full force and effect (evidence of which shall be delivered to Buyer upon its request);

2. violate any Applicable Law, or violate any provision in any formation documents of Seller, the violation of which could have a material adverse effect on the ability of Seller to perform its obligations under this Contract;

3. result in a breach or constitute a default under Seller's formation documents or bylaws, or under any agreement relating to the management or affairs of Seller or any indenture or loan or credit agreement, or any other agreement, lease, or instrument to which Seller is a party or by which Seller or its properties or assets may be bound or affected, the breach or default of which could reasonably be expected to have a material adverse effect on the ability of Seller to perform its obligations under this Contract; or

4. result in, or require the creation or imposition of any mortgage, deed of trust, pledge, lien, security interest, or other charge or encumbrance of any nature (other than as may be contemplated by this Contract) upon or with respect to any of the assets or properties of Seller now owned or hereafter acquired, the creation or imposition of which could reasonably be expected to have a material adverse effect on the ability of Seller to perform its obligations under this Contract.

(C)This Contract is a valid and binding obligation of Seller. The execution and performance of this Contract will not conflict with or constitute a material breach or default under any contract or agreement of any kind to which Seller is a party or any judgment, order, or Applicable Law, that is applicable to Seller or the Facility.

15.2.*Buyer's Representations, Warranties and Covenants*

Buyer hereby represents and warrants to Seller as follows:

(A) Buyer it is acting as a duly authorized representative of the United States of America, acting through the Administrator of General Services pursuant to the authority contained in 40 U.S.C. 501(b)(1).

(B) The execution and performance of Buyer's obligations under this Contract has been authorized by all necessary agency action, and does not and will not:

1. Require any further agency consent or approval;

2. Violate any provision of Federal law, rule, regulation, order, writ, judgment, injunction, decree, determination, or award currently in effect having applicability to Buyer, or conflict with or constitute a breach or default under any contract or agreement of any kind to which Buyer is a party, the violation, conflict, or breach or default of which could have a material adverse effect on the ability of Buyer to perform its obligations under this Contract;

(C) This Contract is a valid and binding obligation of Buyer.

Article 16. Insurance

16.1. *Evidence of Insurance*

Seller shall, if requested by Buyer, provide Buyer with copies of insurance certificates evidencing that insurance coverages for the Facility are in compliance with the specifications for insurance coverage set forth in Exhibit C to this Contract. Such certificates shall (a) name Buyer as an additional insured (except worker's compensation); (b) provide a waiver of any rights of subrogation against Buyer, its Affiliates and their officers, directors, agents, subcontractors, and employees; and (c) indicate that the Commercial General Liability policy has been endorsed as described above. Seller or Seller's broker shall provide Buyer with thirty (30) Days' prior written notice of non-renewal of, cancellation of, or significant modification to any of the corresponding policies (except that such notice shall be ten (10) Days for non-payment of premiums). All policies shall contain an endorsement that Seller's policy shall be primary in all instances. Seller's liability under this Contract is not limited to the amount of insurance coverage required herein.

16.2. *Term and Modification of Insurance*

(A) In the event that any insurance as required herein is on a "claims-made" basis, such insurance shall provide for a retroactive date not later than the Effective Date and such insurance shall be maintained by Seller, with a retroactive date not later than the retroactive date required above, for a minimum of five (5) years after the Term.

(B) If any insurance required to be maintained by Seller hereunder ceases to be reasonably available and commercially feasible in the commercial insurance market, Seller shall provide written notice to Buyer, accompanied by a certificate from an independent insurance advisor of recognized national standing, certifying that such insurance is not reasonably available and commercially feasible in the commercial insurance market for electric generating plants of similar type, geographic location and capacity. Upon receipt of such notice, Seller shall attempt to obtain other insurance that would provide comparable protection against the risk to be insured.

Article 17. Limitation of Liability

Neither Buyer nor Seller ("First Party") shall be liable, whether in warranty, tort or strict liability, to the other Party ("Second Party") for any injury or death to any person, or for any loss or damage to any property, caused by or arising out of any electric disturbance of the First Party's electric system, whether or not such electric disturbance resulted from the First Party's negligent act or omission. Each Second Party shall release the First Party from, and shall indemnify and hold harmless the First Party from, any such liability. As used in this Section, (1) the term "Party" means, in addition to such Party itself, its agents, directors, officers, contractors and employees; (2) the term "damage" means all damage, including consequential damage; and (3) the term

"persons" means any person, including those not connected with either Party to this Contract. Liabilities not excused by reason of Force Majeure or otherwise shall be limited to direct actual damages. Neither Party will be liable to the other Party for consequential, incidental, punitive, exemplary nor indirect damages; provided, however, that nothing in this Article 17 or any other provision of this Agreement shall limit Buyer's obligation to make the termination payment specified in Section 12.11.

Article 18. Legal and Regulatory Compliance

18.1. *Compliance With Laws*

Each Party shall at all times comply, in all material respects, with all Applicable Laws. As applicable, each Party shall give all required notices, shall procure and maintain all necessary governmental permits, licenses, and inspections necessary for performance of such Party's obligations under this Contract, and shall pay its respective charges and fees in connection therewith.

18.2. *Officer Certificates*

Each Party shall deliver or cause to be delivered to the other Party certificates of its officers, accountants, engineers or agents as to matters as may be reasonably requested, and shall make available personnel and records relating to the Facility to the extent that the requesting Party reasonably requires the same in order to fulfill any regulatory reporting requirements, or to assist the requesting Party in litigation, including administrative proceedings before utility regulatory commissions.

Article 19. Assignment and Other Transfer Restrictions

19.1. *No Assignment Without Consent*

This Contract shall be binding upon and inure to the benefit of, or may be performed by, the successors and assigns of the Parties. No Party may assign or otherwise transfer its rights or obligations under this Contract unless it has obtained the prior written consent of the other Party. Seller may assign and/or delegate, or transfer or permit the transfer of all or any portion of its interests in the Facility or this Contract, to any person or entity after obtaining the prior written consent of Buyer, which shall not be unreasonably withheld, delayed or conditioned; provided that such other person or entity assumes, or is otherwise bound to perform, all of Seller's obligations under this Contract. No assignment, delegation, pledge, or transfer shall relieve or release Seller to any extent of any of its pre-transfer obligations under this Contract. No assignment, pledge, or other transfer of this Contract by any Party shall operate to release the assignor, pledgor, or transferor from any of its obligations under this Contract unless consent to the release, which shall not be unreasonably withheld, delayed or conditioned, is given in writing by the other Party.

19.2. *Accommodation of Facility Financing Party*

To facilitate Seller's obtaining of financing to construct and operate the Facility, Buyer shall provide commercially reasonable consents to collateral assignment, certifications, representations, information or other documents, as may be reasonably requested by Seller or the Facility Financing Party in connection with the financing of the Facility (generally, an "Facility Financing Party Consent or Estoppel"), *provided, however*, that in providing an Facility Financing Party Consent or Estoppel, Buyer shall have no obligation to alter or modify the terms of this Contract or provide any consent or enter into any agreement, that materially adversely affects any of Buyer's rights, benefits, risks, or obligations under this Contract. Seller shall reimburse, or shall cause the Facility Financing Party to reimburse, Buyer for the incremental direct expenses (including the documented reasonable fees and expenses of counsel) incurred by Buyer in the preparation, negotiation, execution and/or delivery of any documents requested by Seller or the Facility Financing Party, and provided by Buyer, pursuant to this Section 19.2.

19.3.*Notice of Facility Financing Party Action*

Within ten (10) Days following Seller's receipt of each written notice from the Facility Financing Party of an Event of Default, or Facility Financing Party's intent to exercise any remedies following an Event of Default and expiration of applicable cure periods under the Financing Documents, Seller shall deliver a copy of such notice to Buyer.

19.4.*Subcontracting*

Seller may subcontract its duties or obligations under this Contract without the prior written consent of Buyer, *provided, however,* that no such subcontract shall relieve Seller of any of its duties or obligations hereunder.

Article 20. Miscellaneous

20.1.*Waiver*

The failure of either Party to enforce or insist upon compliance with or strict performance of any of the terms or conditions of this Contract, or to take advantage of any of its rights thereunder, shall not constitute a waiver or relinquishment of any such terms, conditions, or rights, but the same shall be and remain at all times in full force and effect.

20.2.*Taxes*

Seller shall be solely responsible for (i) any and all present or future taxes and other impositions of Governmental Authorities relating to the construction, ownership or leasing, operation or maintenance of the Facility, or any components or appurtenances thereof, and (ii) all *ad valorem* taxes relating to the Facility. Seller's prices under Article 8 are inclusive of such taxes and impositions during the Term.

20.3.*Rate Changes*

(A)The terms and conditions and the rates for service specified in this Contract shall remain in effect for the Term. Absent the Parties' written agreement, this Contract shall not be subject to change by application of either Party pursuant to Section 205 or 206 of the Federal Power Act.

Absent the agreement of all Parties to the proposed change, the standard of review for changes to this Contract whether proposed by a Party, a non-party, or the Federal Energy Regulatory Commission acting *sua sponte* shall be the "public interest" standard of review set forth in United Gas Pipe Line v. Mobile Gas Service Corp., 350 U.S. 332 (1956) and Federal Power Commission v. Sierra Pacific Power Co., 350 U.S. 348 (1956) (aka the Mobile-Sierra doctrine), as interpreted in Morgan Stanley Capital Group, Inc. v. Public Util. Dist. No. 1, 128 S. Ct. 2733 (2008) and NRG Power Marketing, LLC v. Maine Pub. Util. Comm'n, 558 U.S. 165 (2010).

20.4.*Disclaimer of Third Party Beneficiary Rights*

In executing this Contract, Buyer does not, nor should it be construed to, extend its credit or financial support for the benefit of any third parties lending money to or having other transactions with Seller. Nothing in this Contract shall be construed to create any duty to, or standard of care with reference to, or any liability to, any person not a party to this Contract.

20.5.*Relationship of the Parties*

(A)This Contract shall not be interpreted to create an association, joint venture, or partnership between the Parties nor to impose any partnership obligation or liability upon either Party. Neither Party shall have any right, power, or authority to enter into any agreement or undertaking for, or act on behalf of, or to act as an agent or representative of, the other Party.

(B) Seller shall be solely liable for the payment of all wages, taxes, and other costs related to the employment of persons to perform such services, including all federal, state, and local income, social security, payroll, and employment taxes and statutorily mandated workers' compensation coverage. None of the persons employed by Seller shall be considered employees of Buyer for any purpose; nor shall Seller represent to any person that he or she is or shall become a Buyer employee.

20.6.*Equal Employment Opportunity Compliance Certification*

Seller acknowledges that Buyer is subject to various Federal laws, executive orders, and regulations regarding equal employment opportunity and affirmative action. Only to the extent that such Federal laws, executive orders and regulations are applicable to Seller as a vendor to Buyer due to the sale of Renewable Energy under the terms of this Contract and are required by Applicable Law to be incorporated herein, such Federal laws, executive orders and regulations, including 41 C.F.R. § 60-1.4(a)(1-7), are incorporated by reference into this Contract.

20.7.*Survival of Obligations*

Cancellation, expiration, or earlier termination of this Contract shall not relieve the Parties of obligations that by their nature should survive such cancellation, expiration, or termination, including warranties, remedies, or indemnities.

20.8.*Severability*

In the event any of the terms, covenants, or conditions of this Contract, its Exhibits, or the application of any such terms, covenants, or conditions, shall be held invalid, illegal, or unenforceable by any court or administrative body having jurisdiction, all other terms, covenants, and conditions of the Contract and their application not adversely affected thereby shall remain in force and effect, provided that the remaining valid and enforceable provisions materially retain the essence of the parties' original bargain.

20.9.*Complete Agreement; Amendments*

The terms and provisions contained in this Contract constitute the entire agreement between Buyer and Seller with respect to the Facility and shall supersede all previous communications, representations, or agreements, either verbal or written, between Buyer and Seller with respect to the sale of Renewable Energy from the Facility. This Contract may be modified provided that any such modification shall be in writing and signed by both Parties hereto, and *provided further*, that the Exhibits attached hereto may be changed according to the provisions of Section 13.8.

20.10. *Binding Effect*

This Contract, as it may be modified from time to time pursuant to this Article 20, shall be binding upon and inure to the benefit of the Parties hereto and their respective successors-in-interest, legal representatives, and assigns permitted hereunder.

20.11. *Headings*

Captions and headings used in this Contract are for ease of reference only and do not constitute a part of this Contract.

20.12. *Counterparts*

This Contract may be executed in any number of counterparts, and each executed counterpart shall have the same force and effect as an original instrument.

20.13. *Governing Law*

This Contract shall be governed by and construed in accordance with the laws of the State of New York (without reference to choice of law doctrine), except to the extent the Parties' rights and obligations are required to be governed by United States Federal law, then such rights and obligations shall be governed by United States Federal law.

20.14. *Press Releases and Media Contact*

Upon the request of either Party, the Parties shall develop a mutually agreed joint press release to be issued describing the location, size, type and timing of the Facility, the long-term nature of this Contract, and other relevant factual information about the relationship. In the event during the Term, either Party is contacted by the media concerning this Contract or the Facility, the contacted Party shall inform the other Party of the existence of the inquiry, any questions asked, and the substance of any information provided to the media.

20.15. *Forward Contract*

The Parties acknowledge and agree that this Contract constitutes a "forward contract" within the meaning of the United States Bankruptcy Code.

20.16. *Confidentiality*

(A) Availability. The Parties have and will develop certain information, processes, know-how, techniques and procedures concerning the Facility (collectively, "Information") which they consider confidential and proprietary. Notwithstanding the confidential and proprietary nature of such Information, Buyer and Seller (each, the "Disclosing Party") may make this Information available to the other (each, a "Receiving Party") subject to the provisions of this Section 20.16.

(B) Designation. At the time of furnishing or making available for inspection such confidential or proprietary Information, the Disclosing Party shall expressly designate by label, stamp, or oral communication (to be confirmed in writing) the Information which it considers to be confidential and/or proprietary.

(C) Obligations. The Receiving Party's obligations with respect to the use or disclosure of such Information thereafter will be as set forth in this Section 20.16.

(D) Conditions and Restrictions. Upon receiving or learning of Information designated as confidential and/or proprietary by the Disclosing Party, the Receiving Party shall:

1. treat such Information as confidential and use reasonable care not to divulge such Information to any third party except as required by Applicable Law, subject to the restrictions set forth below;

2. restrict access to such Information to employees (and others who agree to be bound by this Contract) whose access is reasonably necessary in developing the Facility and for the purposes of this Contract;

3. use such Information solely for the purpose of developing the Facility and for the purposes of this Contract; and

4. upon the termination of this Contract, destroy or return any such Information in written or other tangible form and any copies thereof, if asked to do so in writing by the Disclosing Party.

(E) Exceptions. The restrictions in this Section 20.16 do not apply to:

1. the contents of this Contract, which becomes a public document upon execution;

2. information which is, or becomes, publicly known or available otherwise than through the action of the Receiving Party in violation of this Contract;

3. information which is in the possession of the Receiving Party prior to receipt from the Disclosing Party or is independently developed by the Receiving Party; *provided* that the person or persons developing same have not had access to such Information; or

4. information which is, in the reasonable written opinion of counsel to the Receiving Party, required to be disclosed pursuant to Applicable Law or regulation (including any Freedom of Information Act request); *provided*, however, that the Receiving Party, prior to such disclosure, shall provide reasonable advance notice to the Disclosing Party of the time and scope of the intended disclosure in order to permit the Disclosing Party opportunity to obtain a protective order or otherwise seek to prevent or limit the scope or otherwise impose conditions upon such disclosure.

(F) Term of Obligations. The obligations of the Parties under this Section 20.16 shall remain in full force and effect for two (2) years following the termination of this Contract.

20.17. ***Anti-deficiency***

In accordance with the Anti-Deficiency Act (31 U.S.C. 1341(a)(1)), nothing contained herein shall be construed as binding the Government to expend, in any one fiscal year, any sum in excess of the appropriation made by Congress for that fiscal year in furtherance of the subject matter of the Contract or to involve the Government in an obligation for the future expenditure of moneys before an appropriation is made.

20.18. ***Incorporation of FARs***

This Contract and the performance of the Parties hereunder is subject to the Federal Acquisition Regulations (FARs) attached hereto as Exhibit E and incorporated by reference herein. The order or precedence with respect to certain provisions of this Contract and the provisions set forth in Exhibit E shall be as described in Exhibit E, as applicable.

IN WITNESS WHEREOF the Parties have executed this Contract in the manner appropriate to each on the date set forth above.

Great Bay Solar I, LLC

(b) (6) [redacted]

By: _____

Name: Greg Buss

Title: President

United States General Services Administration

(b) (6) [redacted]

By: _____

Name: Kenneth M. Shutika

Title: Energy Mgt. Officer / Contracting Officer

EXHIBIT A (to Contract) INTERCONNECTION POINT

The Interconnection Point will be node with id# 659762 within the PJM (Zone) system at a voltage of no less than 137kV. In the event Seller desires to use a point besides the indicated node as the Interconnection Point, then Seller shall obtain the prior written consent of Buyer.

Kings Creek 138 kV

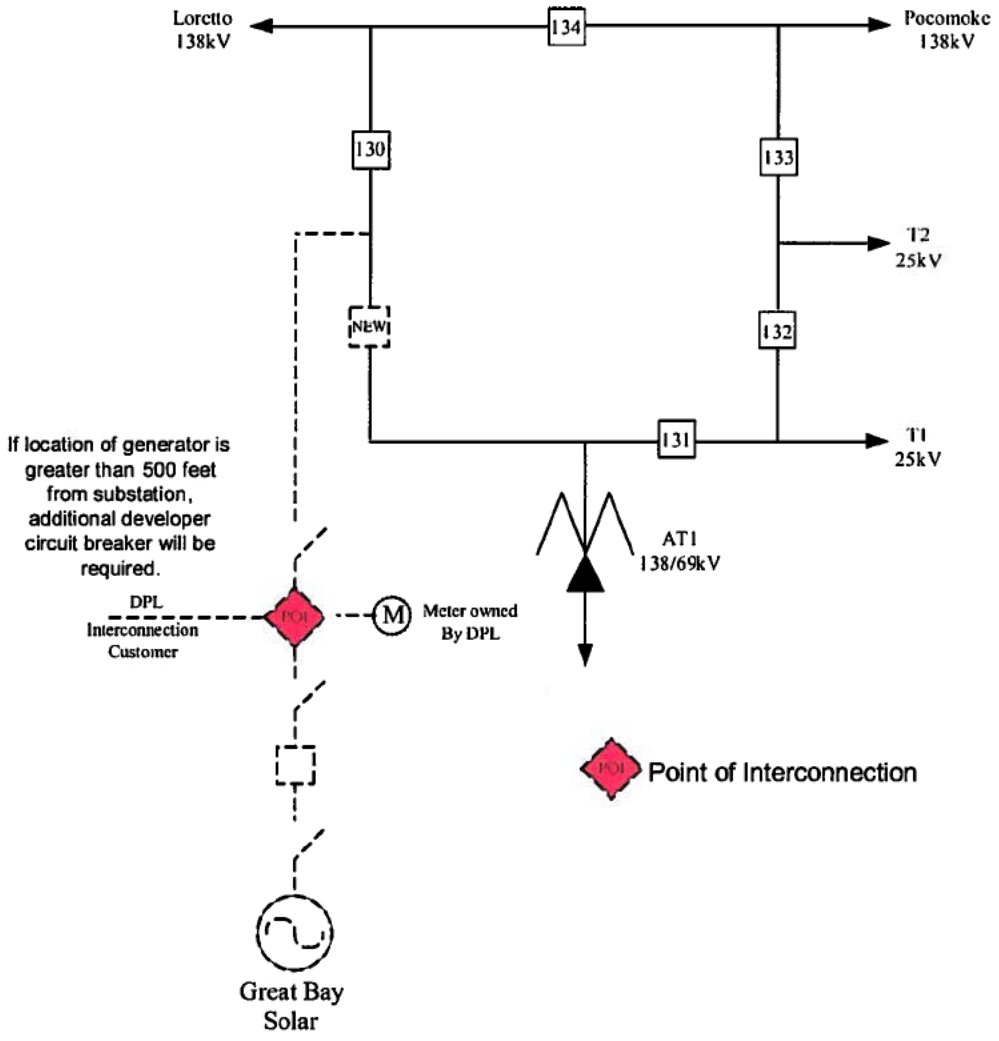

EXHIBIT B (to Contract) Notices and Contact Information

Buyer	Seller
Notices: Ken Shutika 1800 F St NW Washington, DC 20405	**Notices:** General Counsel 1802 Lavaca St. Austin, TX 78701

EXHIBIT C (to Contract) INSURANCE COVERAGE

Types of insurance and coverage:

1. "All-risk" property insurance covering property customarily subject to such insurance with respect to facilities similar in construction, location and occupancy to the Facility, insuring not less than the estimated probable maximum loss of the Facility.

2. Commercial general liability insurance ($1,000,000 per occurrence) covering death, bodily injury and property damage and other types of damage that may be caused to third parties as a result of Seller's activities in connection with the Facility or performance of its obligations under the Contract.

3. Business interruption insurance covering loss of revenues and/or the increased expense to resume operations attributable to the Facility by reason of total or partial suspension or delay of, or interruption in, the operation of the Facility as a result of an insured peril covered under property insurance, to the extent available on commercially reasonable terms as determined by Seller (provided that, notwithstanding any other provision of the Contract, Seller shall not be required to have business interruption insurance until the Commercial Operation Date).

4. Auto liability and employer's liability insurance ($1,000,000 per occurrence) and workers' compensation insurance (as required by applicable Law) with respect to Seller's activities in connection with the Facility or performance of its obligations under the Contract.

EXHIBIT D (to Contract) RENEWABLE ENERGY PAYMENT RATE

	Year During Term		Renewable Energy Payment Rate (per MWh)
	From midnight local Facility time on the following anniversaries of the COD:	***To*** midnight local Facility time on the following anniversaries of the COD:	
Initial Term	COD	1st	(b) (4) [redacted]
	1st	2nd	
	2nd	3rd	
	3rd	4th	
	4th	5th	
	5th	6th	
	6th	7th	
	7th	8th	
	8th	9th	
	9th	10th	
Renewal Term, if applicable	10th	11th	
	11th	12th	
	12th	13th	
	13th	14th	
	14th	15th	
	15th	16th	
	16th	17th	
	17th	18th	
	18th	19th	
	19th	20th	

EXHIBIT E (to Contract) APPLICABLE FEDERAL ACQUISITION REGULATIONS

B.1 CLAUSES INCORPORATED BY REFERENCE

The FAR can be accessed at the following internet address: **http://www.arnet.gov/far/**

(a) **FAR 52.212-4** **Contract Terms and Conditions-Commercial Items** (FEB 2012)
[Reference FAR 12.301(b)(3)]

Addendum To FAR 52.212-4

(1) The provisions of Article 19 – Assignment and Other Transfer Restrictions overcome and have precedence over the Assignment section of the clause at FAR 52.212-4(b) in its entirety.

(2) The provisions in Article 7.2 Title and Risk of Loss overcome and have precedence over the Title section of the clause at FAR 52.212-4 (n) in its entirety.

(3) The provisions in Article 14 on *Force Majeure* overcome and have precedence over the Excusable Delays section of the clause at 52.214-4 (f) in its entirety.

(4) The provisions in Article 12 - Default and Remedies overcome and have precedence over the Termination for Cause section of the clause at FAR 52.212-4 (m) in its entirety.

(c) **FAR 52.216-22** **Indefinite Quantity** (OCT 1995)
[Reference FAR 16.506(e)]

B.2 CLAUSES IN FULL TEXT

FAR 52.204-6 **Data Universal Numbering System (DUNS) Number** (DEC 2012)
[Reference FAR 4.607(a)]

(a) *Definition.* "Data Universal Numbering System (DUNS) number", as used in this provision, means the 9-digit number assigned by Dun and Bradstreet, Inc. (D&B) to identify unique business entities, which is used as the identification number for Federal Contractors.

(b) The offeror shall enter, in the block with its name and address on the cover page of its offer, the annotation "DUNS" or "DUNS+4" followed by the DUNS number or "DUNS+4" that identifies the offeror's name and address exactly as stated in the offer. The DUNS number is a nine-digit number assigned

by Dun and Bradstreet, Inc. The DUNS+4 is the DUNS number plus a 4-character suffix that may be assigned at the discretion of the offeror to establish additional CCR records for identifying alternative Electronic Funds Transfer (EFT) accounts (see Subpart 32.11) for the same concern.

(c) If the offeror does not have a DUNS number, it should contact Dun and Bradstreet directly to obtain one.

(1) An offeror may obtain a DUNS number—

(i) Via the Internet at http://fedgov.dnb.com/webform or if the offeror does not have internet access, it may call Dun and Bradstreet at 1-866-705-5711 if located within the United States; or

(ii) If located outside the United States, by contacting the local Dun and Bradstreet office. The offeror should indicate that it is an offeror for a U.S. Government contract when contacting the local Dun and Bradstreet office.

(2) The offeror should be prepared to provide the following information:

(i) Company legal business name.

(ii) Tradestyle, doing business, or other name by which your entity is commonly recognized.

(iii) Company physical street address, city, state and ZIP Code.

(iv) Company mailing address, city, state and ZIP Code (if separate from physical).

(v) Company telephone number.

(vi) Date the company was started.

(vii) Number of employees at your location.

(viii) Chief executive officer/key manager.

(ix) Line of business (industry).

(x) Company Headquarters name and address (reporting relationship within your entity).

(End of provision)

FAR 52.204-7 **System for Award Management** (JUL 2013)
[Reference FAR 4.1105(a)(1)]

(a) Definitions. As used in this provision—

"Data Universal Numbering System (DUNS) number" means the 9-digit number assigned by Dun and Bradstreet, Inc. (D&B) to identify unique business entities.

"Data Universal Numbering System +4 (DUNS+4) number" means the DUNS number assigned by D&B plus a 4-character suffix that may be assigned by a business concern. (D&B has no affiliation with this 4-character suffix.) This 4-character suffix may be assigned at the discretion of the business concern to establish additional System for Award Management records for identifying alternative Electronic Funds Transfer (EFT) accounts (see the FAR at Subpart 32.11) for the same concern.

"Registered in the System for Award Management (SAM) database" means that—

(1) The offeror has entered all mandatory information, including the DUNS number or the DUNS+4 number, the Contractor and Government Entity (CAGE) code, as well as data required by the Federal Funding Accountability and Transparency Act of 2006 (see Subpart 4.14) into the SAM database;

(2) The offeror has completed the Core, Assertions, and Representations and Certifications, and Points of Contact sections of the registration in the SAM database;

(3) The Government has validated all mandatory data fields, to include validation of the Taxpayer Identification Number (TIN) with the Internal Revenue Service (IRS). The offeror will be required to provide consent for TIN validation to the Government as a part of the SAM registration process; and

(4) The Government has marked the record "Active".

(b)(1) By submission of an offer, the offeror acknowledges the requirement that a prospective awardee shall be registered in the SAM database prior to award, during performance, and through final payment of any contract, basic agreement, basic ordering agreement, or blanket purchasing agreement resulting from this solicitation.

(2) The offeror shall enter, in the block with its name and address on the cover page of its offer, the annotation "DUNS" or "DUNS +4" followed by the DUNS or DUNS +4 number that identifies the offeror's name and address exactly as stated in the offer. The DUNS number will be used by the Contracting Officer to verify that the offeror is registered in the SAM database.

(c) If the offeror does not have a DUNS number, it should contact Dun and Bradstreet directly to obtain one.

(1) An offeror may obtain a DUNS number—

(i) Via the Internet at http://fedgov.dnb.com/webform or if the offeror does not have internet access, it may call Dun and Bradstreet at 1-866-705-5711 if located within the United States; or

(ii) If located outside the United States, by contacting the local Dun and Bradstreet office. The offeror should indicate that it is an offeror for a U.S. Government contract when contacting the local Dun and Bradstreet office.

(2) The offeror should be prepared to provide the following information:

(i) Company legal business.

(ii) Tradestyle, doing business, or other name by which your entity is commonly recognized.

(iii) Company Physical Street Address, City, State, and ZIP Code.

(iv) Company Mailing Address, City, State and ZIP Code (if separate from physical).

(v) Company Telephone Number.

(vi) Date the company was started.

(vii) Number of employees at your location.

(viii) Chief executive officer/key manager.

(ix) Line of business (industry).

(x) Company Headquarters name and address (reporting relationship within your entity).

(d) If the Offeror does not become registered in the SAM database in the time prescribed by the Contracting Officer, the Contracting Officer will proceed to award to the next otherwise successful registered Offeror.

(e) Processing time, which normally takes 48 hours, should be taken into consideration when registering. Offerors who are not registered should consider applying for registration immediately upon receipt of this solicitation.

(f) Offerors may obtain information on registration at https://www.acquisition.gov .

(End of clause)

52.204-8 Annual Representations and Certifications (JUL 2013)

Annual Representations and Certifications (JUL 2013)

(a)(1) The North American Industry Classification System (NAICS) code for this acquisition is **221112**.

(2) The small business size standard is 250 employees.

(3) The small business size standard for a concern which submits an offer in its own name, other than on a construction or service contract, but which proposes to furnish a product which it did not itself manufacture, is 500 employees.

(b)(1) If the provision at 52.204-7, System for Award Management, is included in this solicitation, paragraph (d) of this provision applies.

(2) If the provision at 52.204-7 is not included in this solicitation, and the offeror is currently registered in the System for Award Management (SAM), and has completed the Representations and Certifications section of SAM electronically, the offeror may choose to use paragraph (d) of this provision instead of completing the corresponding individual representations and certifications in the solicitation. The offeror shall indicate which option applies by checking one of the following boxes:

[ ] (i) Paragraph (d) applies.

[ ] (ii) Paragraph (d) does not apply and the offeror has completed the individual representations and certifications in the solicitation.

(c)(1) The following representations or certifications in SAM are applicable to this solicitation as indicated:

(i) 52.203-2, Certificate of Independent Price Determination. This provision applies to solicitations when a firm-fixed-price contract or fixed-price contract with economic price adjustment is contemplated, unless—

(A) The acquisition is to be made under the simplified acquisition procedures in Part 13;

(B) The solicitation is a request for technical proposals under two-step sealed bidding procedures; or

(C) The solicitation is for utility services for which rates are set by law or regulation.

(ii) 52.203-11, Certification and Disclosure Regarding Payments to Influence Certain Federal Transactions. This provision applies to solicitations expected to exceed $150,000.

(iii) 52.204-3, Taxpayer Identification. This provision applies to solicitations that do not include the provision at 52.204-7, System for Award Management.

(iv) 52.204-5, Women-Owned Business (Other Than Small Business). This provision applies to solicitations that—

(A) Are not set aside for small business concerns;

(B) Exceed the simplified acquisition threshold; and

(C) Are for contracts that will be performed in the United States or its outlying areas.

(v) 52.209-2, Prohibition on Contracting with Inverted Domestic Corporations—Representation. This provision applies to solicitations using funds appropriated in fiscal years 2008, 2009, 2010, or 2012.

(vi) 52.209-5, Certification Regarding Responsibility Matters. This provision applies to solicitations where the contract value is expected to exceed the simplified acquisition threshold.

(vii) 52.214-14, Place of Performance—Sealed Bidding. This provision applies to invitations for bids except those in which the place of performance is specified by the Government.

(viii) 52.215-6, Place of Performance. This provision applies to solicitations unless the place of performance is specified by the Government.

(ix) 52.219-1, Small Business Program Representations (Basic & Alternate I). This provision applies to solicitations when the contract will be performed in the United States or its outlying areas.

(A) The basic provision applies when the solicitations are issued by other than DoD, NASA, and the Coast Guard.

(B) The provision with its Alternate I applies to solicitations issued by DoD, NASA, or the Coast Guard.

(x) 52.219-2, Equal Low Bids. This provision applies to solicitations when contracting by sealed bidding and the contract will be performed in the United States or its outlying areas.

(xi) 52.222-22, Previous Contracts and Compliance Reports. This provision applies to solicitations that include the clause at 52.222-26, Equal Opportunity.

(xii) 52.222-25, Affirmative Action Compliance. This provision applies to solicitations, other than those for construction, when the solicitation includes the clause at 52.222-26, Equal Opportunity.

(xiii) 52.222-38, Compliance with Veterans' Employment Reporting Requirements. This provision applies to solicitations when it is anticipated the contract award will exceed the simplified acquisition threshold and the contract is not for acquisition of commercial items.

(xiv) 52.223-1, Biobased Product Certification. This provision applies to solicitations that require the delivery or specify the use of USDA-designated items; or include the clause at 52.223-2, Affirmative Procurement of Biobased Products Under Service and Construction Contracts.

(xv) 52.223-4, Recovered Material Certification. This provision applies to solicitations that are for, or specify the use of, EPA-designated items.

(xvi) 52.225-2, Buy American Act Certificate. This provision applies to solicitations containing the clause at 52.225-1.

(xvii) 52.225-4, Buy American Act—Free Trade Agreements—Israeli Trade Act Certificate. (Basic, Alternates I, II, and III.) This provision applies to solicitations containing the clause at 52.225-3.

(A) If the acquisition value is less than $25,000, the basic provision applies.

(B) If the acquisition value is $25,000 or more but is less than $50,000, the provision with its Alternate I applies.

(C) If the acquisition value is $50,000 or more but is less than $77,494, the provision with its Alternate II applies.

(D) If the acquisition value is $77,494 or more but is less than $100,000, the provision with its Alternate III applies.

(xviii) 52.225-6, Trade Agreements Certificate. This provision applies to solicitations containing the clause at 52.225-5.

(xix) 52.225-20, Prohibition on Conducting Restricted Business Operations in Sudan—Certification. This provision applies to all solicitations.

(xx) 52.225-25, Prohibition on Contracting with Entities Engaging in Certain Activities or Transactions Relating to Iran-Representation and Certifications. This provision applies to all solicitations.

(xxi) 52.226-2, Historically Black College or University and Minority Institution Representation. This provision applies to—

(A) Solicitations for research, studies, supplies, or services of the type normally acquired from higher educational institutions; and

(B) For DoD, NASA, and Coast Guard acquisitions, solicitations that contain the clause at 52.219-23, Notice of Price Evaluation Adjustment for Small Disadvantaged Business Concerns.

(2) The following certifications are applicable as indicated by the Contracting Officer:

[*Contracting Officer check as appropriate.*]

__ (i) 52.219-22, Small Disadvantaged Business Status.

__ (A) Basic.

__ (B) Alternate I.

__ (ii) 52.222-18, Certification Regarding Knowledge of Child Labor for Listed End Products.

__ (iii) 52.222-48, Exemption from Application of the Service Contract Act to Contracts for Maintenance, Calibration, or Repair of Certain Equipment Certification.

__ (iv) 52.222-52, Exemption from Application of the Service Contract Act to Contracts for Certain Services–Certification.

__ (v) 52.223-9, with its Alternate I, Estimate of Percentage of Recovered Material Content for EPA–Designated Products (Alternate I only).

__ (vi) 52.227-6, Royalty Information.

__ (A) Basic.

__(B) Alternate I.

__ (vii) 52.227-15, Representation of Limited Rights Data and Restricted Computer Software.

(d) The offeror has completed the annual representations and certifications electronically via the SAM website accessed through https://www.acquisition.gov. After reviewing the SAM database information, the offeror verifies by submission of the offer that the representations and certifications currently posted electronically that apply to this solicitation as indicated in paragraph (c) of this provision have been entered or updated within the last 12 months, are current, accurate, complete, and applicable to this solicitation (including the business size standard applicable to the NAICS code referenced for this solicitation), as of the date of this offer and are incorporated in this offer by reference (see FAR 4.1201); except for the changes identified below [*offeror to insert changes, identifying change by clause number, title, date*]. These amended representation(s) and/or certification(s) are also incorporated in this offer and are current, accurate, and complete as of the date of this offer.

FAR CLAUSE #	TITLE	DATE	CHANGE
_____	_____	_____	_____

Any changes provided by the offeror are applicable to this solicitation only, and do not result in an update to the representations and certifications posted on SAM.

(End of provision)

FAR 52.212-2 **Evaluation-Commercial Items** (JAN 1999)

[Reference FAR 12.301(c)]

(a) The Government will award a contract(s) resulting from this solicitation to the responsible Offeror(s) whose offer(s) conforming to the solicitation will be most advantageous to the Government, price and other factors considered. The Government will evaluate PRICE and TECHNICAL FACTORS:

(b) A written notice of award or acceptance of an offer, mailed or otherwise furnished to the successful Offeror within the time for acceptance specified in the offer, shall result in a binding contract without further action by either party. Before the offer's specified expiration time, the Government may accept an offer (or part of an offer), whether or not there are negotiations after its receipt, unless a written notice of withdrawal is received before award.

(End of provision)

FAR 52.212-5 Contract Terms and Conditions Required to Implement Statutes or Executive Orders - Commercial Items (SEP 2013)

[Reference FAR 12.301(b)(4)]

(a) The Contractor shall comply with the following Federal Acquisition Regulation (FAR) clauses, which are incorporated in this contract by reference, to implement provisions of law or Executive orders applicable to acquisitions of commercial items:

(1) 52.222-50, Combating Trafficking in Persons (Feb 2009) (22 U.S.C. 7104(g)).

___Alternate I (Aug 2007) of 52.222-50 (22 U.S.C. 7104(g)).

(2) 52.233-3, Protest After Award (AUG 1996) (31 U.S.C. 3553).

(3) 52.233-4, Applicable Law for Breach of Contract Claim (OCT 2004) (Pub. L. 108-77, 108-78).

(b) The Contractor shall comply with the FAR clauses in this paragraph (b) that the Contracting Officer has indicated as being incorporated in this contract by reference to implement provisions of law or Executive orders applicable to acquisitions of commercial items:

[*Contracting Officer check as appropriate.*]

_X_ (1) 52.203-6, Restrictions on Subcontractor Sales to the Government (Sept 2006), with Alternate I (Oct 1995) (41 U.S.C. 253g and 10 U.S.C. 2402).

_X_ (2) 52.203-13, Contractor Code of Business Ethics and Conduct (Apr 2010) (Pub. L. 110-252, Title VI, Chapter 1 (41 U.S.C. 251 note)).

__ (3) 52.203-15, Whistleblower Protections under the American Recovery and Reinvestment Act of 2009 (June 2010) (Section 1553 of Pub. L. 111-5). (Applies to contracts funded by the American Recovery and Reinvestment Act of 2009.)

_X_ (4) 52.204-10, Reporting Executive Compensation and First-Tier Subcontract Awards (Jul 2013) (Pub. L. 109-282) (31 U.S.C. 6101 note).

__ (5) 52.204-11, American Recovery and Reinvestment Act—Reporting Requirements (Jul 2010) (Pub. L. 111-5).

__ (6) 52.209-6, Protecting the Government's Interest When Subcontracting with Contractors Debarred, Suspended, or Proposed for Debarment. (Aug 2013) (31 U.S.C. 6101 note).

__ (7) 52.209-9, Updates of Publicly Available Information Regarding Responsibility Matters (Jul 2013) (41 U.S.C. 2313).

_X_ (8) 52.209-10, Prohibition on Contracting with Inverted Domestic Corporations (May 2012) (section 738 of Division C of Pub. L. 112-74, section 740 of Division C of Pub. L. 111-117, section 743 of Division D of Pub. L. 111-8, and section 745 of Division D of Pub. L. 110-161).

__ (9) 52.219-3, Notice of HUBZone Set-Aside or Sole-Source Award (Nov 2011) (15 U.S.C. 657a).

__ (10) 52.219-4, Notice of Price Evaluation Preference for HUBZone Small Business Concerns (JAN 2011) (if the offeror elects to waive the preference, it shall so indicate in its offer) (15 U.S.C. 657a).

__ (11) [Reserved]

__ (12)(i) 52.219-6, Notice of Total Small Business Set-Aside (Nov 2011) (15 U.S.C. 644).

__ (ii) Alternate I (Nov 2011).

__ (iii) Alternate II (Nov 2011).

__ (13)(i) 52.219-7, Notice of Partial Small Business Set-Aside (June 2003) (15 U.S.C. 644).

__ (ii) Alternate I (Oct 1995) of 52.219-7.

__ (iii) Alternate II (Mar 2004) of 52.219-7.

_X_ (14) 52.219-8, Utilization of Small Business Concerns (Jul 2013) (15 U.S.C. 637(d)(2) and (3)).

_X_ (15)(i) 52.219-9, Small Business Subcontracting Plan (Jul 2013) (15 U.S.C. 637(d)(4)).

__ (ii) Alternate I (Oct 2001) of 52.219-9.

__ (iii) Alternate II (Oct 2001) of 52.219-9.

__ (iv) Alternate III (Jul 2010) of 52.219-9.

__ (16) 52.219-13, Notice of Set-Aside of Orders (Nov 2011)(15 U.S.C. 644(r)).

_X_ (17) 52.219-14, Limitations on Subcontracting (Nov 2011) (15 U.S.C. 637(a)(14)).

_X_ (18) 52.219-16, Liquidated Damages—Subcontracting Plan (Jan 1999) (15 U.S.C. 637(d)(4)(F)(i)).

__ (19)(i) 52.219-23, Notice of Price Evaluation Adjustment for Small Disadvantaged Business Concerns (OCT 2008) (10 U.S.C. 2323) (if the offeror elects to waive the adjustment, it shall so indicate in its offer).

__ (ii) Alternate I (June 2003) of 52.219-23.

__ (20) 52.219-25, Small Disadvantaged Business Participation Program—Disadvantaged Status and Reporting (Jul 2013) (Pub. L. 103-355, section 7102, and 10 U.S.C. 2323).

__ (21) 52.219-26, Small Disadvantaged Business Participation Program— Incentive Subcontracting (Oct 2000) (Pub. L. 103-355, section 7102, and 10 U.S.C. 2323).

__ (22) 52.219-27, Notice of Service-Disabled Veteran-Owned Small Business Set-Aside (Nov 2011) (15 U.S.C. 657 f).

__ (23) 52.219-28, Post Award Small Business Program Representation (Jul 2013) (15 U.S.C. 632(a)(2)).

__ (24) 52.219-29, Notice of Set-Aside for Economically Disadvantaged Women-Owned Small Business (EDWOSB) Concerns (Jul 2013) (15 U.S.C. 637(m)).

__ (25) 52.219-30, Notice of Set-Aside for Women-Owned Small Business (WOSB) Concerns Eligible Under the WOSB Program (Jul 2013) (15 U.S.C. 637(m)).

_X_ (26) 52.222-3, Convict Labor (June 2003) (E.O. 11755).

_X_ (27) 52.222-19, Child Labor—Cooperation with Authorities and Remedies (Mar 2012) (E.O. 13126).

_X_ (28) 52.222-21, Prohibition of Segregated Facilities (Feb 1999).

_X_ (29) 52.222-26, Equal Opportunity (Mar 2007) (E.O. 11246).

_X_ (30) 52.222-35, Equal Opportunity for Veterans (Sep 2010)(38 U.S.C. 4212).

_X_ (31) 52.222-36, Affirmative Action for Workers with Disabilities (Oct 2010) (29 U.S.C. 793).

_X_ (32) 52.222-37, Employment Reports on Veterans (SEP 2010) (38 U.S.C. 4212).

_X_ (33) 52.222-40, Notification of Employee Rights Under the National Labor Relations Act (Dec 2010) (E.O. 13496).

__ (34) 52.222-54, Employment Eligibility Verification (JUL 2012). (Executive Order 12989). (Not applicable to the acquisition of commercially available off-the-shelf items or certain other types of commercial items as prescribed in 22.1803.)

__ (35)(i) 52.223-9, Estimate of Percentage of Recovered Material Content for EPA–Designated Items (May 2008) (42 U.S.C. 6962(c)(3)(A)(ii)). (Not applicable to the acquisition of commercially available off-the-shelf items.)

__ (ii) Alternate I (May 2008) of 52.223-9 (42 U.S.C. 6962(i)(2)(C)). (Not applicable to the acquisition of commercially available off-the-shelf items.)

__ (36) 52.223-15, Energy Efficiency in Energy-Consuming Products (DEC 2007) (42 U.S.C. 8259b).

__ (37)(i) 52.223-16, IEEE 1680 Standard for the Environmental Assessment of Personal Computer Products (DEC 2007) (E.O. 13423).

__ (ii) Alternate I (DEC 2007) of 52.223-16.

_X_ (38) 52.223-18, Encouraging Contractor Policies to Ban Text Messaging While Driving (AUG 2011) (E.O. 13513).

__ (39) 52.225-1, Buy American Act—Supplies (Feb 2009) (41 U.S.C. 10a-10d).

__ (40)(i) 52.225-3, Buy American Act—Free Trade Agreements—Israeli Trade Act (Nov 2012) (41 U.S.C. chapter 83, 19 U.S.C. 3301 note, 19 U.S.C. 2112 note, 19 U.S.C. 3805 note, 19 U.S.C. 4001 note, Pub. L. 103-182, 108-77, 108-78, 108-286, 108-302, 109-53, 109-169, 109-283, 110-138, 112-41, 112-42, and 112-43).

__ (ii) Alternate I (Mar 2012) of 52.225-3.

__ (iii) Alternate II (Mar 2012) of 52.225-3.

__ (iv) Alternate III (Nov 2012) of 52.225-3.

_X_ (41) 52.225-5, Trade Agreements (SEPT 2013) (19 U.S.C. 2501, *et seq.*, 19 U.S.C. 3301 note).

_X_ (42) 52.225-13, Restrictions on Certain Foreign Purchases (June 2008) (E.O.'s, proclamations, and statutes administered by the Office of Foreign Assets Control of the Department of the Treasury).

__ (43) 52.225-26, Contractors Performing Private Security Functions Outside the United States (Jul 2013) (Section 862, as amended, of the National Defense Authorization Act for Fiscal Year 2008; 10 U.S.C. 2302 Note).

__ (44) 52.226-4, Notice of Disaster or Emergency Area Set-Aside (Nov 2007) (42 U.S.C. 5150).

__ (45) 52.226-5, Restrictions on Subcontracting Outside Disaster or Emergency Area (Nov 2007) (42 U.S.C. 5150).

__ (46) 52.232-29, Terms for Financing of Purchases of Commercial Items (Feb 2002) (41 U.S.C. 255(f), 10 U.S.C. 2307(f)).

__ (47) 52.232-30, Installment Payments for Commercial Items (Oct 1995) (41 U.S.C. 255(f), 10 U.S.C. 2307(f)).

_X_ (48) 52.232-33, Payment by Electronic Funds Transfer—System for Award Management (Jul 2013) (31 U.S.C. 3332).

__ (49) 52.232-34, Payment by Electronic Funds Transfer—Other than System for Award Management (Jul 2013) (31 U.S.C. 3332).

__ (50) 52.232-36, Payment by Third Party (Jul 2013) (31 U.S.C. 3332).

__ (51) 52.239-1, Privacy or Security Safeguards (Aug 1996) (5 U.S.C. 552a).

__ (52)(i) 52.247-64, Preference for Privately Owned U.S.-Flag Commercial Vessels (Feb 2006) (46 U.S.C. Appx. 1241(b) and 10 U.S.C. 2631).

__ (ii) Alternate I (Apr 2003) of 52.247-64.

(c) The Contractor shall comply with the FAR clauses in this paragraph (c), applicable to commercial services, that the Contracting Officer has indicated as being incorporated in this contract by reference to implement provisions of law or Executive orders applicable to acquisitions of commercial items:

[*Contracting Officer check as appropriate.*]

__ (1) 52.222-41, Service Contract Act of 1965 (Nov 2007) (41 U.S.C. 351, *et seq.*).

__ (2) 52.222-42, Statement of Equivalent Rates for Federal Hires (May 1989) (29 U.S.C. 206 and 41 U.S.C. 351, *et seq.*).

__ (3) 52.222-43, Fair Labor Standards Act and Service Contract Act—Price Adjustment (Multiple Year and Option Contracts) (Sep 2009) (29 U.S.C. 206 and 41 U.S.C. 351, *et seq.*).

__ (4) 52.222-44, Fair Labor Standards Act and Service Contract Act—Price Adjustment (Sep 2009) (29 U.S.C. 206 and 41 U.S.C. 351, *et seq.*).

__ (5) 52.222-51, Exemption from Application of the Service Contract Act to Contracts for Maintenance, Calibration, or Repair of Certain Equipment—Requirements (Nov 2007) (41 351, *et seq.*).

__ (6) 52.222-53, Exemption from Application of the Service Contract Act to Contracts for Certain Services—Requirements (Feb 2009) (41 U.S.C. 351, *et seq.*).

__ (7) 52.222-17, Nondisplacement of Qualified Workers (JAN 2013) (E.O.13495).

__ (8) 52.226-6, Promoting Excess Food Donation to Nonprofit Organizations (Mar 2009) (Pub. L. 110-247).

__ (9) 52.237-11, Accepting and Dispensing of $1 Coin (Sept 2008) (31 U.S.C. 5112(p)(1)).

(d) *Comptroller General Examination of Record.* The Contractor shall comply with the provisions of this paragraph (d) if this contract was awarded using other than sealed bid, is in excess of the simplified acquisition threshold, and does not contain the clause at 52.215-2, Audit and Records—Negotiation.

(1) The Comptroller General of the United States, or an authorized representative of the Comptroller General, shall have access to and right to examine any of the Contractor's directly pertinent records involving transactions related to this contract.

(2) The Contractor shall make available at its offices at all reasonable times the records, materials, and other evidence for examination, audit, or reproduction, until 3 years after final payment under this contract or for any shorter period specified in FAR Subpart 4.7, Contractor Records Retention, of the other clauses of this contract. If this contract is completely or partially terminated, the records relating to the work terminated shall be made available for 3 years after any resulting final termination settlement. Records relating to appeals under the disputes clause or to litigation or the settlement of claims arising under or relating to this contract shall be made available until such appeals, litigation, or claims are finally resolved.

(3) As used in this clause, records include books, documents, accounting procedures and practices, and other data, regardless of type and regardless of form. This does not require the Contractor to create or maintain any record that the Contractor does not maintain in the ordinary course of business or pursuant to a provision of law.

(e)(1) Notwithstanding the requirements of the clauses in paragraphs (a), (b), (c), and (d) of this clause, the Contractor is not required to flow down any FAR clause, other than those in this paragraph (e)(1) in a

subcontract for commercial items. Unless otherwise indicated below, the extent of the flow down shall be as required by the clause—

(i) 52.203-13, Contractor Code of Business Ethics and Conduct (Apr 2010) (Pub. L. 110-252, Title VI, Chapter 1 (41 U.S.C. 251 note)).

(ii) 52.219-8, Utilization of Small Business Concerns (Jul 2013) (15 U.S.C. 637(d)(2) and (3)), in all subcontracts that offer further subcontracting opportunities. If the subcontract (except subcontracts to small business concerns) exceeds $650,000 ($1.5 million for construction of any public facility), the subcontractor must include 52.219-8 in lower tier subcontracts that offer subcontracting opportunities.

(iii) 52.222-17, Nondisplacement of Qualified Workers (JAN 2013) (E.O. 13495). Flow down required in accordance with paragraph (l) of FAR clause 52.222-17.

(iv) 52.222-26, Equal Opportunity (Mar 2007) (E.O. 11246).

(v) 52.222-35, Equal Opportunity for Veterans (Sep 2010) (38 U.S.C. 4212).

(vi) 52.222-36, Affirmative Action for Workers with Disabilities (Oct 2010) (29 U.S.C. 793).

(vii) 52.222-40, Notification of Employee Rights Under the National Labor Relations Act (Dec 2010) (E.O. 13496). Flow down required in accordance with paragraph (f) of FAR clause 52.222-40.

NOT APPLICABLE (viii) 52.222-41, Service Contract Act of 1965 (Nov 2007) (41 U.S.C. 351, *et seq.*).

(ix) 52.222-50, Combating Trafficking in Persons (Feb 2009) (22 U.S.C. 7104(g)).

___Alternate I (Aug 2007) of 52.222-50 (22 U.S.C. 7104(g)).

NOT APPLICABLE (x) 52.222-51, Exemption from Application of the Service Contract Act to Contracts for Maintenance, Calibration, or Repair of Certain Equipment-Requirements (Nov 2007) (41 U.S.C. 351, *et seq.*).

NOT APPLICABLE (xi) 52.222-53, Exemption from Application of the Service Contract Act to Contracts for Certain Services-Requirements (Feb 2009) (41 U.S.C. 351, *et seq.*).

NOT APPLICABLE (xii) 52.222-54, Employment Eligibility Verification (JUL 2012).

NOT APPLICABLE (xiii) 52.225-26, Contractors Performing Private Security Functions Outside the United States (Jul 2013) (Section 862, as amended, of the National Defense Authorization Act for Fiscal Year 2008; 10 U.S.C. 2302 Note).

NOT APPLICABLE (xiv) 52.226-6, Promoting Excess Food Donation to Nonprofit Organizations (Mar 2009) (Pub. L. 110-247). Flow down required in accordance with paragraph (e) of FAR clause 52.226-6.

(xv) 52.247-64, Preference for Privately Owned U.S.-Flag Commercial Vessels (Feb 2006) (46 U.S.C. Appx. 1241(b) and 10 U.S.C. 2631). Flow down required in accordance with paragraph (d) of FAR clause 52.247-64.

(2) While not required, the contractor may include in its subcontracts for commercial items a minimal number of additional clauses necessary to satisfy its contractual obligations.

(End of clause)

52.217-9 Option to Extend the Term of the Contract.

As prescribed in 17.208(g), insert a clause substantially the same as the following:

OPTION TO EXTEND THE TERM OF THE CONTRACT (MAR 2000)

(a) The Government may extend the term of this contract by written notice to the Contractor within 180 days of contract expiration; provided that the Government gives the Contractor a preliminary written notice of its intent to extend at least 365 days before the contract expires. The preliminary notice does not commit the Government to an extension.

(b) If the Government exercises this option, the extended contract shall be considered to include this option clause.

(c) The total duration of this contract, including the exercise of any options under this clause, shall not exceed 20 years.

(End of clause)