Thomson Reuters
Court Express
633 West 5th Street, Suite 2300
Los Angeles, CA 90071
Tel (800) 766-3320 Fax (888) 680-9902

THOMSON REUTERS

October 15, 2019

VIA ONLINE SUBMISSION

Regional Freedom of Information Officer

U.S. EPA, Region 9

75 Hawthorne Street (ORC-1)

San Francisco, CA 94105

Re: Freedom of Information Act Request

Dear FOIA Administrator:

This letter is submitted pursuant to the Freedom of Information Act, 5 U.S.C. § 552 and the United States Environmental Protection Agency ("EPA") Freedom of Information Act Regulations, in particular 40 CFR §§ 2.101(a) and 2.102, and requests copies of any and all public records (as hereinafter defined) that fall in the categories specified below and which are in the custody, control, or possession of the EPA Region 9 and/or any public official, employee, agent, contractor, or anyone acting on behalf of the EPA.

The term "**records**" shall mean any and all public records, including without limitation reports, records, drafts, letters, memoranda, notes, communications, inspection reports, logs, tables, spreadsheets, books, photographs, electronic files, emails, facsimiles, diagrams, documents, and every other means of recording upon any tangible thing any form of communication or representation. The terms "**relating to**" or "**concerning**" mean in whole or in part to discuss, describe, reflect, memorialize, contain, analyze, study, report on, comment on, evidence, constitute, embody, identify, state, consider, recommend, set forth, concern, address, deal with or in any way pertain to. Further, for the purposes of this request, (1) the terms "**and**" and "**or**" are terms of inclusion and not of exclusion and shall have both conjunctive and disjunctive meanings; and (2) the terms "**any**" and "**all**" mean each and every.

For purposes of this request, the "**Permit**" shall mean The Class V Experimental Injection Wells Permit (permit no. R9UIC-CA5-FY09-1) issued to C6 Resources, LLC, an affiliate of Shell Oil Company, for wells C6-1 (injection) and C6-2 (monitoring) under the EPA Underground Injection Control Program. The Permit is attached hereto as Exhibit A

Records Requested: Any and all records relating to:

1. All records reflecting any communications concerning or relating to the Permit.
2. All records reflecting EPA's approval of the Permit.
3. All records concerning applications or submittals made to EPA for the Permit.

If, for any reason, EPA Region 9 decides to withhold or otherwise redact information contained in its files relating to the public records described above on the basis of privilege or otherwise, please provide a statement describing the nature of any such material and the basis for any such decision, citing the legal authorities on which EPA Region 9 relies. Please also set forth any appeal procedures available under law.

We hereby agree to pay copying costs and other reasonable costs necessary for the above requested documents up to five hundred dollars ($500). In the event such fees may be in excess of this amount, please contact me prior to incurring any costs. In the alternative, we are amenable to electronic disclosure of the records requested to the extent that such disclosure is more convenient and may be made in a more expeditious fashion. To the extent any of the records responsive to this request are stored in electronic format, please also provide a copy of the records in their native electronic format on CD-ROM or other media that will enable us to load the records onto a computer. When providing electronic records, please include metadata. To the extent that certain reports and/or data are available before others, we ask that you please provide such documents on a rolling basis.

If you have any questions concerning this request, please contact me at robert.fernandez@thomsonreuters.com. We thank you for your cooperation and look forward to hearing from you promptly.

Very truly yours,

/s/ Robert Fernandez

Robert Fernandez
THOMSON REUTERS COURT EXPRESS
633 West 5th Street, Suite 2300
Los Angeles, CA 90071
800766-3320
robert.fernandez@thomsonreuters.com

EXHIBIT A

United States Environmental Protection Agency

Underground Injection Control Program

DRAFT PERMIT

Class V Experimental Injection Wells

Permit No. R9UIC-CA5-FY09-1

Well Names:
C6-1 (injection), C6-2 (monitoring)

Birds Landing, California
Solano County

Issued to:

C6 Resources, LLC
(An affiliate of Shell Oil Company)
200 Dairy Ashford Drive, P.O. Box 576
Houston, TX 77001-0576

Table of Contents

Part I. AUTHORIZATION TO INJECT 4

Part II. SPECIFIC PERMIT CONDITIONS 6

A. REQUIREMENTS PRIOR TO DRILLING, TESTING, CONSTRUCTING, OR OPERATING 6

1. Financial Assurance 6

2. Field Demonstration Submittal, Notification, and Reporting 6

B. WELL CONSTRUCTION 6

1. Locations of Wells 6

2. Information/Data Collection and Testing during Drilling and Construction 7

3. Injection Formation Testing 8

4. Drilling, Work-over, and Plugging Procedures 13

5. Casing and Completion Specifications 14

6. Injection Intervals 14

7. Confining Layers 16

8. Monitoring Devices 17

9. Final Well Construction Report and Completion of Construction Notice 18

10. Proposed Changes and Workovers 18

C. CORRECTIVE ACTION 18

D. WELL OPERATION 18

1. Demonstrations Required Prior to Injection 18

2. Mechanical Integrity 19

3. Injection Pressure Limitation 22

4. Injection Volume (Rate) Limitation 22

5. Injection Fluid Limitation 23

6. Tubing/Casing Annulus Requirements 24

7. Experimental Objectives – Monitoring, Analysis and Application 24

E. MONITORING, RECORDKEEPING, AND REPORTING OF RESULTS 24

1. Injection Well Monitoring Program 24

2. Monitoring Information 25

3. Monitoring Devices 26

4. Recordkeeping 29

5. Reporting 29

F. PLUGGING AND ABANDONMENT 31

1. Notice of Plugging and Abandonment 31

2. Plugging and Abandonment Plans 32

3. Cessation of Injection Activities 32

4. Plugging and Abandonment Report 32

G. FINANCIAL RESPONSIBILITY 33

1. Demonstration of Financial Responsibility 33

2. Insolvency of Financial Institution 33
3. Insolvency of Owner or Operator 34
H. DURATION OF PERMIT 34
Part III. GENERAL PERMIT CONDITIONS 35
A. EFFECT OF PERMIT 35
B. PERMIT ACTIONS 35
1. Modification, Revocation and Reissuance, or Termination 35
2. Transfers 35
C. SEVERABILITY 35
D. CONFIDENTIALITY 36
E. GENERAL DUTIES AND REQUIREMENTS 36
1. Duty to Comply 36
2. Penalties for Violations of Permit Conditions 36
3. Need to Halt or Reduce Activity Not a Defense 36
4. Duty to Mitigate 37
5. Proper Operation and Maintenance 37
6. Property Rights 37
7. Duty to Provide Information 37
8. Inspection and Entry 37
9. Signatory Requirements 38
10. Additional Reporting 38
11. Continuation of Expiring Permit 39

APPENDIX A - Project Maps
APPENDIX B - Well Schematics
APPENDIX C - EPA Reporting Forms
APPENDIX D - Region 9 Temperature Logging Requirements
APPENDIX E - Region 9 UIC Pressure Falloff Requirements
APPENDIX F - Plugging and Abandonment Plans
APPENDIX G - Region 9 Step Rate Test Policy
APPENDIX H - CO_2 Specifications and Potential Tracers
APPENDIX I - Operations Timeline

Part I. **AUTHORIZATION TO INJECT**

Pursuant to the Underground Injection Control (UIC) regulations of the U.S. Environmental Protection Agency (EPA) codified at Title 40 of the Code of Federal Regulations (CFR), §§124, 144, 145, 146, 147, and 148,

C6 Resources, LLC
(An affiliate of Shell Oil Company)
200 Dairy Ashford Drive, P.O. Box 576
Houston, TX 77001-0576

is hereby authorized, contingent upon permit conditions, to construct and operate a Class V Experimental injection well facility consisting of one (1) injection well, known as C6-1, and one (1) monitoring well, known as C6-2. Both wells are to be located in Section 11, Township 3N, Range 1E, on CoCo Property, LLC land in Solano County. Exact locations of each new well must be established and approved as outlined in this permit.

EPA shall issue authorization to drill and construct the new wells after the requirements of Financial Responsibility in Part II, Section G of this permit have been met. EPA shall grant authorization to inject in well C6-1 after the requirements of Part II Sections B-D of this permit have been met and approved. Operation of the injection well shall be limited to a maximum volume and pressure, to be determined, as stated in this permit in Part II B.3(c). Total injection amounts must not exceed specified limits.

If approved, injection shall be authorized into either the Anderson Sandstone (beneath the Meganos Shale), the Hamilton Sandstone (beneath the Ione-Capay Shale), the Domengine Sandstone (beneath the Nortonville Shale), the Upper Martinez Sandstone (beneath the Anderson Shale), or the Martinez123 Sandstone (beneath the Martinez Shale), depending on which injection and confining zones meet permit and project objectives. These wells are to be completed for the purpose of injecting and monitoring an anticipated volume of between 2,000 and 6,000 metric tonnes of commercial-grade carbon dioxide (CO_2) at supercritical conditions. The injection is expected to occur over a one to two-month period. The CO_2 will be transported by tanker trailers to the site, where it will be stored in tanks on-site. Subsurface monitoring by C6 Resources, LLC and the West Coast Regional Carbon Sequestration Partnership (WESTCARB) is required to continue for six (6) months after cessation of injection to gather information on the geology and suitability of the location for sequestration of CO_2.

All conditions set forth herein are based on Title 40 §§124, 144, 145, 146, 147 and 148 of the Code of Federal Regulations.

This permit consists of thirty-nine (39) pages plus the appendices, and includes all items listed in the Table of Contents. Further, it is based upon representations made by C6 Resources, LLC and on other information contained in the administrative record. It is the responsibility of the Permittee to read, understand, and comply with all terms and conditions of this permit.

This permit and the authorization to construct, test, inject, monitor and report are issued for a period of two (2) years unless terminated under the conditions set forth in Part III, Section B.1 of this permit.

This permit is issued and becomes effective on _____.

_____

Alexis Strauss, Director
Water Division, EPA Region IX

Part II. **SPECIFIC PERMIT CONDITIONS**

A. REQUIREMENTS PRIOR TO DRILLING, TESTING, CONSTRUCTING, OR OPERATING

1. Financial Assurance

The Permittee shall supply evidence of financial assurance, in accordance with Section G of this part, prior to commencing Drilling and Construction.

2. Field Demonstration Submittal, Notification, and Reporting

a. Prior to each demonstration required in the following sections B through D, the Permittee shall submit plans for procedures and specifications to the U.S. Environmental Protection Agency Region IX Ground Water Office (EPA) for discussion and approval. The submittal address is provided in paragraph E.5.(i) of this part. No demonstration in these sections may proceed without prior written approval from EPA.

b. The Permittee must notify EPA at least thirty (30) days prior to performing any required field demonstrations after EPA approves the demonstration workplan, in order to allow EPA to arrange to witness if so elected.

c. The Permittee shall submit results of each demonstration required in this section to EPA within sixty (60) days of completion.

Use of California Division of Oil, Gas, and Geothermal Resources (CDOGGR) reporting forms (such as a Well Summary Report) is acceptable, provided all information specified by this permit is included.

B. WELL CONSTRUCTION

1. Locations of Wells

Injection well C6-1 and monitoring well C6-2, authorized under this permit, will be located approximately 1,700 feet south of Montezuma Hills Road, near Birds Landing, California (See Appendix A, Figure 1) on CoCo Property, LLC land. C6 Resources, LLC has an easement agreement with CoCo Property, LLC for use of the land. Monitoring well C6-2 is proposed to be placed 100 to 200 feet away from injection well C6-1. The proposed general location for the two new wells is found in Appendix A, Figures 2 and 3.

a. Prior to drilling any well, the Permittee must submit proposed field coordinates (Section, Township, Range, with latitude/longitude) for the surface location of that specific well; for subsequent wells, also provide the distance between all wells, along with any justification for the proposed separation distance between the wells, both at the surface and at total depth.

b. After drilling is completed, the Permittee must submit final field coordinates (Section, Township, Range, with latitude/longitude) of any well constructed under this permit with the Final Well Construction Report required under paragraph 9(a) of this section. If final well coordinates differ from the proposed coordinates submitted under paragraph (a) above, the record of and approval by EPA must be included.

2. <u>Information/Data Collection and Testing during Drilling and Construction</u>

Five geologic zones were identified in the permit application as possible injection targets. The Anderson Sandstone is the primary target and the injection well will be completed at that depth, or at the depth of an alternate target sandstone formation, based upon data obtained before casing the deep part of the well. If the Anderson Sandstone proves unsatisfactory for injection, the Hamilton and Domengine Sandstone formations will serve as alternate injection zones. Lastly, the Martinez123 and Upper Martinez Sandstones will be investigated for injection if the previously listed zones do not meet regulatory and operational requirements. Refer to Part II, B.6 for systematic procedures for testing and plugging back of alternate injection intervals. A diagram of the geologic column, that includes each of the proposed target injection zones and overlying confining zones, is found in Appendix A, Figure 4. The Proposed Well Schematics for injection well C6-1 are found in Appendix B, Figures 1 and 2, and for monitoring well C6-2 in Appendix B, Figures 3 and 4.

Logs and other tests conducted during drilling and construction of both the injection and monitoring wells must include, at a minimum, deviation checks, casing logs, and injection formation tests as outlined in 40 CFR §146.12(d). Open Hole logs shall be conducted in wells C6-1 and C6-2 over the entire open hole sequence below the conductor casing.

During construction of injection well C6-1, Permittee must conduct Formation Evaluation wireline logging operations, provide complete results and use those results to estimate (with justification) and report values for hydrocarbon saturation, porosity, lithology, and rock mechanical properties for both the injection and confining zones identified within the permitted geological sequence.

For both injection well C6-1 and monitoring well C6-2, before surface, intermediate, and long string casings are set, dual induction/spontaneous potential/gamma ray/caliper (DIL/SP/GR/CAL) logs must be run over the course

of the entire open hole sequences after each well is drilled to each respective terminal depth. After each casing is set and cementing is completed, a spherically focused cement bond evaluation log (CBL) must be run over the course of the entire cased hole sequence of each well to independently evaluate the bond between cement and casing as well as the bond between cement and formation (See D.2(a)(iv) of this part).

3. <u>Injection Formation Testing</u>

Injection formation information, as described in 40 CFR 146.12(e), shall be determined through well logs and tests and must include porosity, permeability, static formation pressure, and effective thickness of the injection zone. A summary of results must be submitted to EPA with the Final Construction Report required in paragraph 9(a) of this permit and updated periodically with subsequent analyses.

a. Formation Water Testing

During construction of the wells, information relating to formation water of potential injection zones at these sites shall be obtained and submitted to EPA. This information shall include direct Total Dissolved Solids (TDS) analysis of target injection formation water samples to demonstrate either the presence and characteristics of, or the lack of, any Underground Sources of Drinking Water (USDW, as defined in 40 CFR §144.3). See Appendix A, Figure 5 for regional aquifer salinity measurements.

The Permittee must provide well logs and representative water sample analyses from the targeted injection aquifer using method(s) approved by EPA as evidence sufficient to confirm compatibility of the injectate with the injection formation. Formation water samples from the injection zone must be collected (swabbed or other approved method) from injection well C6-1. Field measurements of pH, electrical conductance, and temperature will be carried out to confirm that representative Anderson, Hamilton, Domengine, Martinez123 or Upper Martinez Sand Formation water is being collected. Subsequent laboratory analysis of the water samples will include at least TDS and Total Suspended Solids (TSS); Trace Metals, Alkalinity, Conductivity, Hardness, pH, Specific Gravity (see II.E.1(a)), and Oil and Grease (per 40 CFR §136.3, Table I).

Upon termination of recovery of formation fluids (including produced fluids intended for later use in well testing), The Permittee shall observe, measure and analyze down-hole pressure build-up data to determine formation and reservoir properties using established reservoir engineering analysis methods. The Permittee shall submit a proposed procedure at least 30 days prior to conducting the fluid withdrawal and pressure build-

up testing for approval. Results of the analysis shall be included in the Final Well Construction Report when submitted.

b. Mini-frac Injectivity Test

The Permittee may conduct a mini-frac injectivity test ahead of the Step Rate Test (SRT) to assess receptivity of the potential injection interval, and to confirm that the proposed SRT injection pressures span the range from the measured initial shut-in to the parting pressure of the injection interval.

Detailed plans for conducting the mini-frac injectivity test shall be submitted to EPA for review, possible editing, and approval. If approved, Permittee may schedule the mini-frac injectivity test, providing EPA at least thirty (30) days notice before the test is conducted. Any non-native fluids to be used during the mini-frac injectivity test shall comply with Hazardous Waste Determination (see paragraph D1(b) of this section) and fluid testing requirements (see paragraph E.1(a) of this section).

The Permittee shall adhere to the following conditions in designing and conducting the mini-frac injectivity test:

i. Injection as proposed in an approved mini-frac injectivity test procedure is temporarily authorized while the mini-frac injectivity test is completed.

ii. Prior to testing, shut in the well long enough so that the bottom-hole pressure stabilizes.

iii. Measure pressures with a down-hole pressure bomb or other approved pressure monitoring system and synchronize the data with data from a surface pressure recorder.

iv. Use enough rate and volume to establish and extend a fracture which can be monitored with the surface pressure recorder.

v. After a sufficient volume of fluid has been pumped and a fracture has been propagated, shut down pumps, observe and record the instantaneous shut-in pressure, and monitor surface pressure decline long enough until fracture closure pressure is observed.

vi. A second mini-frac injectivity test may be proposed by the Permittee to ensure consistency in fracture pressure results. EPA will evaluate this proposal.

vii. The Permittee shall report the results to EPA within 45 days of conducting the mini-frac injectivity test. The results shall include analyses of the pressure decline from the mini-frac injectivity test and pressure versus rate.

viii. The Permittee may produce water from the saline injection interval, filter it, and then use it for the mini-frac injectivity test. The Permittee may also use commercial brine to conduct the mini-frac injectivity test. Laboratory analysis that yields representative data on the physical, chemical, or other relevant characteristics of all injected fluids proposed for use during the injection test shall be conducted in accordance with requirements outlined in paragraph E.1.(a). If using non-native fluids, laboratory analysis of proposed mini-frac injectivity test injection fluids shall confirm the non-hazardous nature of the fluids before the mini-frac injectivity test is conducted.

c. Step-Rate Test

The Permittee shall conduct a Step-Rate Test (SRT) on injection well C6-1 to evaluate formation fracture pressure before CO_2 injection is authorized. Refer to Society of Petroleum Engineering (SPE) paper #16798 for test design and analysis. The SRT results will be used to establish the maximum allowable injection pressure and rate limitations, in accordance with section D, paragraphs 3 and 4 of this part. Detailed plans for conducting the SRT must be submitted to EPA for review, possible editing, and approval. Once approved, the Permittee may schedule the SRT, providing EPA at least thirty (30) days notice before the SRT is conducted. The Permittee shall adhere to the following conditions in designing and conducting their required SRT:

i. Injection as proposed in an approved SRT procedure is temporarily authorized while the SRT is completed.

ii. Prior to testing, shut in the well long enough so that the bottom-hole pressure approximates shut-in formation pressure.

iii. Measure pressures with a down-hole pressure bomb or other approved pressure monitoring system and synchronize the data with data from a surface pressure recorder. Data sampling rate must allow for observation and analysis of the pressure transient behavior during each rate step as well as during the final pressure falloff period which is discussed in item (vi) below.

iv. Use equal-length time step intervals throughout the test; these should be technically justified and should be sufficiently long to overcome wellbore storage and to achieve radial flow. Use no less than thirty (30) minute or longer time intervals. The 30-minute (or greater) increments should be sufficient to allow for proper rate stabilization of the injection pump(s), allow sufficient time to overcome wellbore storage effects between each rate change (especially at the low rates), and to observe a "leveling off" of the reservoir pressure buildup for each step.

v. Record at least three (3) time steps (data points on pressure vs. flow plot) before reaching the anticipated fracture pressure and at least two steps above the fracture pressure. Use one (1) barrel per minute rate increments in the early test stages. Larger rate increments may be used later in the test, but justification for such larger increments must be submitted to EPA for approval, in advance.

vi. At the end of the test, shut down pumps and record the instantaneous shut in pressure and observe the pressure falloff for a sufficient time period to observe and later analyze the radial flow portion of the injection zone during the SRT. The length of time for pressure falloff observation must be determined and discussed in the Permittee's submission plans in advance of conducting the SRT.

vii. The Permittee shall report the results to EPA within 45 days of conducting the SRT. The results shall include analyses of the pressures versus rate and the transmissivity and storativity for the stepped rates throughout the SRT by analyzing the pressure transient data.

viii. The Permittee may produce water from the saline injection interval, filter it, and then use it for the step-rate test. The Permittee may also use commercial brine to conduct the SRT. Laboratory analysis that yields representative data on the physical, chemical, or other relevant characteristics of all injected fluids proposed for use during the SRT must be conducted in accordance with requirements outlined in paragraph E.1.(a). If using non-native fluids, laboratory analysis of proposed SRT injection fluids must confirm the non-hazardous nature of the fluids before the SRT may be conducted.

d. Fall Off Pressure Test (FOT)

i. Initial Pressure Transient Test

To determine and to monitor formation characteristics, a FOT using formation or commercial brine shall be performed in well C6-1 prior to carbon dioxide injection in order to investigate formation properties (e.g., permeability, etc.), presence or absence of near well boundaries, and wellbore conditions (skin, completion efficiency, and wellbore storage). However, after drilling the injection well, if unfavorable formation and reservoir properties are encountered, sufficient native brine may not have been produced to conduct the FOT. Commercial brine may be used instead of the native brine to conduct the FOT. The Permittee must notify EPA if such a situation arises. The injection brine must be filtered to remove suspended solids (e.g., sand, silt, drilling mud) and temporarily stored in an above-ground tank. Fluorescein may be added to the water to trace the fluid before injecting the tagged water back into the injection well at a constant rate. Downhole pressure and temperature must be monitored in the injection well during the FOT. The pressure transient response observed during injection and the pressure fall-off period shall be analyzed to determine well and formation characteristics.

A) Detailed plans for conducting the FOT (including the pre-FOT injection period) shall be submitted to EPA for review and approval. Once approved, the Permittee may schedule the FOT, providing EPA at least thirty (30) days notice before the test is conducted.

B) Laboratory analysis that yields representative data on the physical, chemical, or other relevant characteristics of all non-native injected fluids proposed for use during the FOT shall be conducted in accordance with requirements outlined in paragraph E.1.(a). Laboratory analysis of proposed FOT injection fluids shall confirm the non-hazardous nature of the non-native fluids before the FOT is conducted.

C) The FOT shall be conducted in accordance with EPA guidance found in Appendix E. Any sections of the guidance procedure that the Permittee wishes to modify shall be submitted to EPA for approval in advance of conducting the test.

D) The Permittee shall use the test results to recalculate the Zone of Endangering Influence (ZEI," as defined in 40 CFR §146.6) and to evaluate whether any corrective action is now required (refer to Section C of this part); a summary of the recalculation shall be included with the FOT report.

E) The results of the test shall be included with the next monthly report due after completion of the FOT, as described in Section E, paragraph 5 of this part.

ii. Final Pressure Transient Test

A FOT shall be run in injection well C6-1 at the termination of the CO_2 injection period. After shutting in the injection well, pressure fall-off with CO_2 shall be recorded. The FOT must be conducted in accordance with EPA guidance found in Appendix E. Any sections of the guidance procedure that the Permittee wishes to modify must be specifically addressed, justified and submitted to EPA for approval in advance of conducting the test. The Permittee shall use the test results to recalculate the ZEI; a summary of the recalculation shall be included with the FOT report. Detailed plans for conducting the FOT must be submitted to EPA for review and approval. Once approved, the Permittee may schedule the FOT, providing EPA at least thirty (30) days notice before the test is conducted.

4. <u>Drilling, Work-over, and Plugging Procedures</u>

Drilling, work-over, and plugging procedures must comply with the CDOGGR "Onshore Well Regulations" of the California Code of Regulations, found in Title 14, Natural Resources, Division 2, Department of Conservation, Chapter 4, Article 3, Section 1722-1723. The Permittee does not need to apply to the CDOGGR for a drilling permit, but must adhere to adopted CDOGGR standards, when necessary, as a component of U.S. EPA Region IX requirements. Drilling procedures shall also include the following:

a. Details for staging long-string cementing or justification for cementing without staging;

b. Records of daily Drilling Reports (electronic and hard copies);

c. Blowout Preventer (BOP) System testing on recorder charts including complete explanatory notes during the test(s);

d. Casing and other tubular and accessory measurement tallies; and

e. During drilling, the Permittee may add a small quantity of Optitrak 600 blue dye to the drilling mud to discriminate mud filtrate from background formation fluid so that when water samples are obtained, the amount of mud filtrate in the samples can be determined.

f. During drilling through the proposed injection intervals, the Permittee may add fluorescein fluorescent dye to the drilling fluids/mud.

Procedures provided on reporting forms such as CDOGGR's Well Summary Report are acceptable, provided all required information as specified above is included.

5. Casing and Completion Specifications

Notwithstanding any other provisions of this permit, the Permittee shall case and cement the wells to prevent the movement of fluids into or between USDWs. Cement evaluation logging analyses shall be performed as described in paragraph D.2(a)(iv) of this part. Casing strings shall be maintained in good condition throughout the operating life of the wells. See Appendix B, Figures 1 and 3, for the approximate construction specifications pertaining to the two proposed wells C6-1 and C6-2, respectively.

EPA may require or allow the operator's request for minor alterations to the construction requirements for wells C6-1 and C6-2 based upon the information obtained during well drilling and related operations if the proposed casing setting depths will not completely cover the base of the USDWs and the confining formations located immediately above any of the proposed injection zones. Alterations and other rework operations that may occur later in the course of operation of the wells are considered minor for this permit and must be properly reported (use EPA Form 7520-12).

The exact depths of injection zone intervals and casing setting depths are expected to be realized upon drilling. Final depths must be determined by the field conditions, sieve analysis, well logs, and other input from the drilling consultant and geologists. EPA approval must be obtained for the proposed Drilling Plan and any revisions to the plan prior to installation. These modifications must be documented in the Final Well Construction Report (See paragraph 9(a) below).

6. Injection Intervals

Injection shall be permitted and systematically authorized for the Anderson, Hamilton, Domengine, Martinez123 and Upper Martinez formations, which are expected to occur at depths ranging from approximately 7,995 to 12,760 feet below ground surface (bgs), as indicated from offset well records and logs. Initial

injection shall occur at approximately 10,880 feet bgs in the Anderson Sandstone formation. However, if this injection interval proves unsatisfactory or unusable as an injection zone, other formations may be systematically considered for injection. These zone changes shall be requested in writing and proposed procedures must include plans for placement of cement across previously perforated injection intervals, testing of the cement plug, and perforating the alternative injection interval. These injection interval changes must be approved by EPA before they are enacted and are considered minor in this permit. These alterations and other rework operations that may occur later in the course of operation of the wells must be properly reported (EPA Form 7520-12) and the Permittee must demonstrate that the injection well has mechanical integrity in accordance with D.2(a)(i) before any injection is authorized.

Well C6-1 shall be permitted for injection into the formations listed below. As discussed in paragraph B.2 of this section, the Anderson Sandstone is the primary target. The Hamilton and Domengine Sandstone formations will serve as alternate injection zones, while the Martinez123 and Upper Martinez Sandstones will be investigated for injection only if the previously listed zones do not meet regulatory and operational requirements.

Anderson Sandstone:

> The top of the Anderson Sandstone is at an approximate depth of 10,880 feet bgs. The Anderson Sandstone injection unit is anticipated to be approximately 700 feet thick (based on offset well logs).

Hamilton Sandstone:

> The top of the Hamilton Sandstone is at an approximate depth of 9,230 bgs. The Hamilton Sandstone injection unit is anticipated to be approximately 715 feet thick (based on offset well logs).

Domengine Sandstone:

> The top of the Domengine Sandstone is at an approximate depth of 7,995 feet bgs. The Domengine Sandstone injection unit is anticipated to be approximately 355 feet thick (based on offset well logs). The Domengine Sandstone is the primary productive interval in the nearby Rio Vista field.

Martinez123 Sandstone:

> The top of the Martinez123 Sandstone is at an approximate depth of 12,760 feet bgs. The Martinez123 Sandstone injection unit is anticipated to be approximately 1,000 feet thick (based on offset well logs).

Upper Martinez Sandstone:

The top of the Upper Martinez Sandstone is at an approximate depth of 12,475 bgs. The Upper Martinez Sandstone injection unit is anticipated to be 165 feet thick (based on offset well logs).

7. <u>Confining Layers</u>

Field information on the confining formations at the C6-1 and C6-2 sites, such as their characteristics, thicknesses, and local structures must be obtained and updated during drilling of the injection and monitoring wells and shall be included in the Final Well Construction Report required in paragraph 9(a) of this section.

The confining formations associated with the proposed injection zones are listed below:

Meganos Shale:

The confining layer above the Anderson Sandstone, the Meganos Shale, underlies the Hamilton Sandstone. It is expected to be more than 900 feet thick at the site of injection. The top of the Meganos Shale confining layer is anticipated to be at 9,945 feet bgs.

Ione-Capay Shale:

The confining layer above the Hamilton Sandstone, the Ione-Capay Shale, underlies the Domengine Sandstone. It is expected to be approximately 900 feet thick at the site of injection. The top of the Martinez Shale confining layer is anticipated to be at 8,350 bgs.

Nortonville Shale:

The confining layer above the Domengine Sandstone, the Nortonville Shale, underlies the Markley Sandstone and is expected to be approximately 340 feet thick at the site of injection. The top of the Nortonville Shale confining layer is anticipated to be at 7,645 feet bgs.

Martinez Shale:

The confining layer above the Martinez123 Sandstone, the Martinez Shale, underlies the Upper Martinez Sandstone. It is expected to be approximately 120 feet thick at the site of injection. The top of the Martinez Shale confining layer is anticipated to be at 12,640 feet bgs.

Anderson Shale:

The confining layer above the Upper Martinez Sandstone, the Anderson Shale, underlies the Anderson Sandstone. It is expected to be approximately 900 feet thick at the site of injection. The top of the Anderson Shale confining layer is anticipated to be at 11,580 feet bgs.

8. <u>Monitoring Devices</u>

The Permittee shall install and maintain in good operating condition:

a. A tap on the discharge line between the injection pump and the wellhead for the purpose of obtaining representative samples of injection fluids; and

b. Devices to continuously measure and record injection pressure, annulus pressure, flow rate, and injection volumes, subject to the following:

   i. Pressure gauges shall be of a design to provide:

      A) A full pressure range of at least fifty (50) percent greater than the anticipated operating pressure; and

      B) A certified deviation accuracy of five (5) percent or less throughout the operating pressure range.

   ii. Flow meters shall measure cumulative volumes and be certified for a deviation accuracy of five (5) percent or less throughout the range of injection rates allowed by the permit.

c. Devices to continuously measure and record seismic activity. Four broad-band, three-component seismic stations, with sensors in wells approximately 100 feet deep, will be installed near the pilot project area. Data from these stations will be transmitted to the Northern California Earthquake Data Center, which is jointly operated by UC Berkeley and the U.S. Geological Survey, and to Lawrence Berkeley National Laboratory (LLBL) for analysis associated with the project. The monitoring network will be used to estimate the location, depth, and magnitude of seismic events to help distinguish between naturally-occurring and induced seismicity. The final report to be prepared by LLBL for C6 Resources summarizing the results of the seismic study must be submitted to EPA.

9. Final Well Construction Report and Completion of Construction Notice

a. The Permittee must submit a final well construction report, including logging, and other results, with a schematic diagram and detailed description of construction, including driller's log, materials used (i.e., tubing tally), and cement (and other) volumes, to EPA within sixty (60) days after completion of each respective well (C6-1 and C6-2).

b. The Permittee must also submit a notice of completion of construction to EPA (see EPA Form 7520-9 in Appendix C) within sixty (60) days after completion of each respective well (C6-1 and C6-2). Injection operations may not commence until EPA has inspected or otherwise reviewed the injection and monitoring wells and notified the Permittee that it is in compliance with the conditions of the permit.

10. Proposed Changes and Workovers

The Permittee shall give advance notice to EPA, as soon as possible, of any planned physical alterations or additions to the permitted injection or monitoring wells. Any changes in well construction require prior approval of EPA and may require a permit modification under the requirements of 40 CFR §§144.39 and 144.41. In addition, the Permittee shall provide all records of well workovers, logging, or other subsequent test data, including required mechanical integrity testing, to EPA within sixty (60) days of completion of the activity. Appendix C contains samples of the appropriate reporting forms. Demonstration of mechanical integrity shall be performed within thirty (30) days of completion of workovers or alterations to the tubing-casing-packer annular system and prior to resuming injection activities, in accordance with paragraphs D 1(a) and 2 of this part.

C. CORRECTIVE ACTION

Corrective action may be necessary for existing wells in the Area of Review (AOR), that penetrate the injection zone, or which may otherwise cause movement of fluids into USDWs (see 40 CFR §§144.55 and 146.7). No corrective action plan is currently required as there are no active or plugged and abandoned wells within the Area of Review (AOR), nor do any wells penetrate the confining or injection zones within a one-mile radius of the well sites. See Appendix A, Figure 6.

D. WELL OPERATION

1. Demonstrations Required Prior to Injection

Injection operations using well C6-1 may not commence until construction of injection well C6-1 and monitoring well C6-2 is complete and the Permittee has complied with following paragraphs (a) and (b):

a. Mechanical Integrity

The Permittee must demonstrate that the injection (C6-1) and monitoring (C6-2) wells have and maintain mechanical integrity consistent with CFR §146.8 and with paragraph 2 of this section. The Permittee must demonstrate that there are not significant leaks in the casing strings and tubing and that there is not significant fluid movement into or between USDWs through the casing wellbore annulus or vertical channels adjacent to the injection wellbore. The Permittee may not commence initial injection into well C6-1, nor recommence injection after a workover that has compromised well integrity (for example, if the packer is unseated) until it has received written notice from EPA that such a demonstration is satisfactory.

b. Injectate Hazardous Waste Determination

The Permittee shall perform an Injectate Hazardous Waste Determination of each unique CO_2 stream injected into the injection well authorized by this permit, including fluids, dyes and tracers used in well testing and standard injection operations, according to 40 CFR §262.11. The CO_2 that will be used for injection will be food grade, purchased from a commercial source. The Permittee is not required to perform a Hazardous Waste Determination of any native formation fluids to be re-injected during testing or construction. The results of the analyses shall demonstrate that the injectate does not meet the definition of hazardous waste as defined in 40 CFR §261.

i. The Permittee is required to submit a letter to EPA confirming that the "Hazardous Waste Determination" was carried out according to 40 CFR §261 within sixty (60) days of its having been completed.

ii. The Permittee shall perform an additional "Hazardous Waste Determination" whenever there is a process change or a change in fluid chemical constituents or characteristics.

2. <u>Mechanical Integrity</u>

a. Mechanical Integrity Tests (MITs)

Mechanical integrity testing must conform to the following requirements throughout the life of the wells:

i. Casing/tubing annular pressure (internal MIT)

A demonstration of the absence of significant leaks in the casing, tubing and/or fluid input lines of both wells C6-1 and C6-2 shall be made by performing a pressure test on the annular space between the tubing and long string casing. This test must be for a minimum of thirty (30) minutes at a pressure equal to or greater than the maximum allowable injection pressure. A well passes the MIT if there is less than a five (5) percent change in pressure over the thirty (30) minute period. A pressure differential of at least 350 pounds per square inch (psi) between the tubing and annular pressures shall be maintained throughout the MIT.

ii. Continuous pressure monitoring

The tubing/casing annulus pressure and injection pressure of injection well C6-1 must be monitored and recorded continuously by a digital instrument with a resolution of one tenth (0.1) psi. The average, maximum, and minimum monthly results must be included in the monthly report to EPA per paragraph E 5 of this part unless more detailed records are requested by EPA.

iii. Injection profile survey (external MIT)

The Permittee shall demonstrate that the injectate is confined to the proper zone while injecting into well C6-1. This demonstration shall consist of a radioactive tracer (RAT), such as Iodine 131, and monthly temperature logs (as specified in Appendix D) or other diagnostic tool or procedure as approved by EPA.

A) Radioactive Tracer Log: Detailed plans for conducting the RAT must be submitted to EPA for review and approval. Once approved, the Permittee may schedule the RAT, providing EPA at least thirty (30) days notice before the external MIT is conducted. The demonstration must be conducted following perforation of the injection zone interval and before any injection commences. Native formation fluids or commercial brines may be used to conduct this testing. The results of the testing must subsequently be presented to EPA for approval. The Permittee may not commence CO_2 injection until RAT (or other demonstration) results have been approved by EPA.

B) Temperature Log: See Appendix D for temperature log requirements. Temperature logs must be conducted and submitted on a monthly basis per paragraph E.5(e)(vii) of this part.

iv. Cement Evaluation Analysis

After casing is installed, after conducting a cement squeeze job, or after any well cement repair, in either wells constructed under this permit, the Permittee must submit cementing records and cement evaluation logs to EPA. These records and logs must demonstrate the isolation of the injection interval and other formations from underground sources of drinking water by means of cementing all strings of the wellbore annuli to surface. The analysis shall include a spherically-focused tool, run after the long-string casing is set and cemented, which enables the evaluation of the bond between cement and casing as well as of the bond between cement and formation. The Permittee may not commence or recommence injection until it has received written notice from EPA that such a demonstration is satisfactory.

b. Subsequent MITs

EPA may require that an MIT be conducted at any time during the permitted life of the wells. The Permittee shall also arrange and conduct MITs according to the following requirements:

Within thirty (30) days from completion of any work-over where the integrity of the tubing-casing-packer annular system is compromised, or when any loss of mechanical integrity becomes evident during operation, an internal pressure MIT must be conducted on the injection well authorized under this permit. The loss of mechanical integrity must be reported to EPA within twenty-four hours in accordance with paragraph Part III.E.10(d). Any leak must be sealed and mechanical integrity demonstrated before authorization to re-commence injection is granted.

c. Loss of Mechanical Integrity

The Permittee must notify EPA, in accordance with paragraph Part III, E.10 of this permit, under any of the following circumstances:

i. The well fails to demonstrate mechanical integrity during a test; or

ii. A loss of mechanical integrity becomes evident during operation; or

iii. A significant change in the annulus or injection pressure occurs during normal operating conditions. See D.6(b) of this part.

Furthermore, in the event of (i), (ii), or (iii), injection activities must be terminated immediately and operation shall not be resumed until the Permittee has taken actions necessary to restore mechanical integrity of the well, and EPA gives approval to recommence injection.

d. Prohibition without Demonstration

After the permit effective date, injection into well C6-1 may continue only if:

i. The well has passed an internal pressure MIT in accordance with paragraph 2(a)(i) of this part; and

ii. The Permittee has received written notice from EPA that the internal pressure MIT demonstration is satisfactory.

3. <u>Injection Pressure Limitation</u>

a. Maximum allowable injection pressure measured at the wellhead for well C6-1 shall be based on the SRT conducted under paragraph B 3(c) of this part. EPA will provide the Permittee written notification of the maximum allowable injection pressure for the injection well constructed and operated under this permit, along with a minor modification of the permit under 40 CFR §144.41(e).

b. In no case shall pressure in the injection zone during injection initiate new fractures or propagate existing fractures in the injection zone or the confining zone. In no case shall injection pressure cause the movement of injection or formation fluids into or between underground sources of drinking water.

4. <u>Injection Volume (Rate) Limitation</u>

a. The injection rate for well C6-1 shall not exceed the volume determined as appropriate through the demonstrations conducted in this section and justified by measured friction factors. EPA will provide written notification of the maximum injection rate allowed under this permit prior to any injection conducted after an approved SRT (see Section B.3(c)).

b. The Permittee may request an increase in the maximum rate allowed in paragraph (a) above. Any such request must be made in writing and appropriately justified to EPA.

c. Any request for an increase in injection rate shall demonstrate to the satisfaction of EPA that the increase in rate will not interfere with the operation of the facility, its ability to meet conditions described in this permit, change its well classification, or cause migration of injectate or pressure buildup to occur beyond the AOR.

d. The Permittee shall inject no more than 6,000 metric tonnes of CO_2 into well C6-1. Injection is anticipated to last between one and two months. If operations require a longer period of time to complete injection of the intended volume, injection may continue for a period such that there is sufficient time before the expiration of the permit to conduct the required six (6) month post-injection monitoring program required in paragraph E.3(b) of this section.

5. <u>Injection Fluid Limitation</u>

a. The Permittee shall not inject any hazardous waste, as defined by 40 CFR Part 261, at any time. See also paragraph 1(b) of this section.

b. Injection fluids not pertaining to well testing shall be limited to commercial grade (CO_2) or better of at least 95% CO_2 by volume with small amounts of other gases. Small quantities of perfluorocarbon tracers, noble gases (Neon 20, Argon 36, Krypton 84, Xenon 132), fluorescein, and sulfur hexafluoride (SF_6) may be added to the fluids used in drilling and testing and added to CO_2 injectate to study fluid flow processes, characterize fluid saturations, and detect any leakage out of the injection reservoir up the wellbore or through the cap rock. See Appendix H for commercial grade CO_2 specifications and for a complete list of potential tracers.

c. Any well stimulation or treatment procedure performed at the discretion of the operator shall be proposed and submitted to EPA for approval thirty (30) days prior to implementation.

d. Native brines may be produced during the pilot test during initial development of well completion, reservoir testing for aquifer characterization or artificial lift activities required for fluid sampling. These native brines, as well as commercial brines, may be injected during pressure transient, step-rate, mini-injectivity, fall-off, mechanical integrity or other well testing. The Permittee shall submit to EPA a proposal to inject any commercial or native brines for well testing, and must receive written approval prior to conducting testing. All non-native brines must adhere to requirements described in paragraph 1(b) of this section and 40 CFR Part 261.

6. Tubing/Casing Annulus Requirements

a. Corrosion-inhibiting annular fluid shall be used and maintained during well operation. A complete description and characterization shall be submitted to EPA for approval thirty (30) days before its use.

b. A minimum pressure of one hundred (100) psi at shut-in conditions shall be maintained on the tubing/casing annulus. Within the first two weeks of injection operations, the Permittee shall determine the range of fluctuation of annular pressure for the well during periods of normal operation. This normal pressure range shall be submitted with the first monthly report after injection has commenced. Any annular pressure outside of the normal range shall be considered a loss of mechanical integrity and shall be reported per paragraph 2(c) of this section.

7. Experimental Objectives – Monitoring, Analysis and Application

This Class V Experimental Project will provide a sophisticated level of investigation and analyses of complex mechanical operations and in situ processes that are expected to evaluate and verify theoretical projections related to the injection of CO_2 at supercritical conditions. Progress is expected throughout this project regarding theoretical predictive analysis and application techniques as new data are acquired and various reservoir and geological characteristics and properties are obtained and confirmed. Active injection and post-injection phase data must be analyzed and interpreted to determine formation properties, including permeability, compressibility, existence of reservoir boundary effects, fluid properties and CO_2 plume migration and behavior. Reports addressing these objectives shall be made as outlined in paragraph E.5 of this part.

E. MONITORING, RECORDKEEPING, AND REPORTING OF RESULTS

1. Injection Well Monitoring Program

Injection fluids must be analyzed to yield representative data on their physical, chemical, or other relevant characteristics. These analyses shall be conducted for all CO_2 sources, tracers, dyes and all fluids injected during well testing (except native formation fluids). The Permittee shall take samples at or before the wellhead for analysis. Test results shall be submitted to EPA as required within this permit (see paragraph 5.c(i) below).

Samples and measurements shall be representative of the monitored activity. The Permittee must use applicable analytical methods described in Table I of 40 CFR §136.3 or in EPA Publication SW-846, ”Test Methods for Evaluating Solid Waste, Physical/Chemical Methods,” unless other methods have been approved by EPA.

a. Summary of acceptable analytic methods:

i. Inorganic Constituents – appropriate USEPA methods for Major Anions and Cations (including an anion/cation balance).

ii. Solids - Standard Methods 2540C and 2540D for Total Dissolved Solids and Total Suspended Solids.

iii. General and Physical Parameters – appropriate USEPA methods for Temperature, Turbidity, pH, Conductivity, Hardness, Specific Gravity, Alkalinity, and Biological Oxygen Demand (BOD); and Density and Viscosity (See EPA Bulletin 712-C-96-032) under standard conditions.

iv. Trace Metals - USEPA Method 200.8.

v. Volatile Organic Compounds (VOCs) - USEPA Method 8260C.

vi. Semi-Volatile Organic Compounds - USEPA Method 8270.

b. Analysis of injection fluids.

Monthly, or whenever there is a significant change in injection fluids, injectate sampling and analyses shall be performed as outlined in paragraph (a) above.

2. <u>Monitoring Information</u>

Records of monitoring activity required under this permit shall include:

a. Date, exact location, and time of sampling or field measurements;

b. Name(s) of individual(s) who performed sampling or measuring;

c. Exact sampling method(s) used;

d. Date(s) laboratory analyses were performed;

e. Name(s) of individual(s) who performed laboratory analyses;

f. Types of analyses; and

g. Results of analyses.

3. Monitoring Devices

a. Continuous monitoring devices

Injectate temperature, annular pressure, and injection pressure shall be measured downhole and at the wellhead of injection well C6-1 using equipment of sufficient precision and accuracy.

Downhole pressure and temperature sensors must be installed below the packer as close to the depth of the target injection formation as possible in injection well C6-1 and monitoring well C6-2. Backup pressure and temperature gauges may be installed above the packer as well. The downhole sensors must be connected to surface read-out gauges by fiber optic cables that shall be strapped/clamped to the outside of the tubing. The fiber optic cables shall enable the construction of a temperature distribution profile over the entire depth of the well. The downhole sensors must also be tied into the data acquisition system so that the continuously monitored and recorded reservoir response can be sequenced and archived with the surface data.

All measurements must be recorded at minimum to a resolution of one tenth of the unit of measure (e.g. injection rate and volume must be recorded to a resolution of a tenth of a gallon; pressure must be recorded to a resolution of a tenth of a psig; injection fluid temperature must be recorded to a resolution of a tenth of a degree Fahrenheit). Exact dates and times of measurements, when taken, must be recorded and submitted. Injection rate shall be measured in the supply line immediately before the wellhead of well C6-1. The Permittee shall continuously monitor and record the following parameters at the prescribed frequency:

Monitoring Parameter	Frequency	Instrument
Injection rate (gallons per minute)	Hourly	Digital recorder
Daily Injection Volume (gallons)	Daily	Digital totalizer
Total Cumulative Volume (gallons)	Daily	Digital totalizer
Wellhead injection pressure (psig)	Hourly	Digital recorder
Bottom-hole injection pressure (psig)	Hourly	Digital recorder
Annular pressure (psig)	Hourly	Digital recorder
Wellhead injection fluid temperature (°F)	Hourly	Digital recorder
Bottom-hole injection fluid temperature (°F)	Hourly	Digital recorder

The Permittee is required to adhere to the required format below for reporting injection rate and well head injection pressure. An example of the required electronic data format:

DATE	TIME	INJ. PRESS (PSIG)	INJ. RATE (GPM)
03/09/10	16:33:16	1525.6	65.8
03/09/10	17:33:16	1525.4	66.3

Each data line shall include four (4) values separated by a consistent combination of spaces or tabs. The first value contains the date measurement in the format of mm/dd/yy or mm/dd/yyyy, where mm is the number of the month, dd is the number of the day and yy or yyyy is the number of the year. The second value is the time measurement, in the format of hh:mm:ss, where hh is the hour, mm are the minutes and ss are the seconds. Hours should be calculated on a 24-hour basis, i.e. 6 PM is entered as 18:00:00. Seconds are optional. The third value is the well head injection pressure in psi. The fourth column is injection rate in gallons per minute.

Bottom-hole pressure and temperature monitoring must proceed during the active injection phase and subsequent falloff phase following cessation of injection activity. The post-injection continuous temperature and pressure monitoring phase must continue for up to six (6) months after completion of injection.

b. Subsurface CO_2 Monitoring, Tracking and Imaging

i. Required Monitoring:

A) Vertical Seismic Profiling (VSP): The VSP method must test the ability to detect and spatially map in three-dimensions the location and spatial extent of the CO_2 plume injected for sequestration. VSP shall use seismic sensors in the subsurface (clamped to well C6-1) along with surface Vibroseis sources (vibration generators.) A VSP survey must be performed two (2) times, once before and once after CO_2 injection, to detect CO_2-induced changes. Multiple seismic sensors must be deployed in well C6-1 during each VSP survey, spanning the interval from below the selected reservoir, to several hundred feet above it.

B) Crosswell Tomography Surveys (CTS): CTS is designed to provide high resolution two-dimensional imaging of the plane between the injection and monitoring wells. Pre- and post-injection (time-lapse) CTS must be performed.

C) Distributed Temperature Sensor (DTS) must be deployed to measure the temperature profile along the length of the wellbore, to measure well head injection fluid and bottom hole injection fluid temperature hourly during the injection period. Temperature measurements shall be collected during the active and post-injection phases.

D) Thermal Perturbation Study of CO_2 Phase Saturation: A Distributed Thermal Perturbation Sensor (DTPS), consisting of a fiber-optic distributed temperature sensor and a linear heating cable, must be deployed in the well as a method to detect any CO_2 leakage outside the wellbore. By measuring thermal conductivity with the DTPS prior to CO_2 injection and periodically after injection commences, it is expected that any leakage into the confining formation can be detected.

E) Reservoir Saturation Monitoring: Dual-burst thermal decay time tools allow for a post-injection look at the thermal neutron adsorption, described by the capture cross section of the formation, to infer water saturation. Reservoir saturation monitoring may be run in two different modes—capture cross-section or carbon oxygen ratio. For the purpose of this project, capture cross section is more suitable for achieving the technical objective of measuring CO_2 saturation, and shall be run post-injection.

ii. Additional Proposed Monitoring:

A) A U-tube system may be deployed in the monitoring well (C6-2) to allow periodic fluid sampling from the injecting formation during the CO_2 injection test.

B) A Real Time Casing Imager (RTCI) may be used to provide information about well casing deformation and integrity in real-time, without interrupting operations to run logging tools.

iii. Calibration and Maintenance of Equipment

All monitoring and recording equipment shall be calibrated and maintained on a regular basis to ensure proper working order of all equipment.

4. Recordkeeping

The Permittee shall retain the following records and shall have them available at all times for examination by an EPA inspector:

a. All monitoring information, including required observations, calibration and maintenance records, recordings for continuous monitoring instrumentation, copies of all reports required by this permit, and records of all data used to complete the permit application, for both the injection well and the monitoring well;

b. Information on the nature and composition of all injected fluids;

c. Results of the injectate "Hazardous Waste Determination" according to 40 CFR §262.11. Analyses results shall demonstrate that the injectate, including CO_2 and all fluids used for well testing (except native formation fluids), does not meet the definition of hazardous waste as defined in 40 CFR §261; and

d. Records and results of MITs, any other tests required by EPA, and any well workovers completed.

e. The Permittee must maintain copies (or originals) of all records described in paragraphs (a) through (d) above during and for five (5) years after the operating life of the well and shall make such records available at all times for inspection at the facility if personnel are present for field operations. If the facility is temporarily shut down and no personnel are present the records must be available at 150 N. Dairy Ashford, Houston, Texas 77079.

f. The Permittee may only discard the records described in paragraphs (a) through (d) if:

   i. the records are either delivered to the Regional Administrator; or

   ii. written approval from the Regional Administrator to discard the records is obtained.

5. Reporting

Monthly, the Permittee shall submit accurate reports to EPA containing, at minimum, the following information:

a. Hourly and daily values, submitted in electronic format, for the continuously monitored parameters specified for the injection wells in paragraph 3(a) of this section;

b. Monthly cumulative total volumes, as well as monthly average, minimum, and maximum values for the continuously monitored rate, pressure, and temperature parameters specified for the injection wells in paragraphs 3(a) and monitoring results from monitoring under paragraph 3(b) of this section, unless more detailed records are requested by EPA;

c. Monthly analyses, to be included in the next monthly report following completion:

   i. Injection fluid characteristics for parameters specified in paragraph 1(a) of this section;

   ii. When appropriate, Injectate Hazardous Waste Determination according to paragraph D 1(b) of this part.

d. To be included with the next monthly report immediately following completion, results of any MITs or other tests required by EPA, and any well workovers completed;

e. To be included in the monthly report due after cessation of injection activities, the following analyses:

   i. Annual reporting summary (7520-11 in Appendix C);

   ii. FOT results as required in paragraph B 3(d) of this part, including ZEI calculation;

   iii. Shut-in static reservoir pressure cumulative behavior plot of the injection zone, as required in paragraph B 3(d)(ii) of this part;

   iv. Injection profile survey results as required in D 2(a)(iii) of this part; and

   v. Internal MIT report as required in D.2(a)(i) of this part.

   vi. A temperature distribution profile/log, according to requirements outlined in Appendix D.

f. A narrative description of all non-compliance that occurred during the reporting period.

g. Results of all required and proposed subsurface CO_2 monitoring, tracking and imaging methods, as described in paragraph 3(b) of this section. Further, Permittee shall submit updates comparing operational results to predictive models with regard to reservoir and geologic characteristics, and injectate plume behavior and migration.

h. Provide the raw (unedited) daily drilling superintendant's report

i. Monthly report forms as specified in Appendix C shall be submitted to EPA on the 30th day of each month. The first monthly report is due on the 30th day of the month during which drilling commences.

j. Monitoring results and all other reports required by this permit must be submitted to the following address:

U.S. Environmental Protection Agency, Region IX
Water Division
Ground Water Office (Mail Code WTR-9)
75 Hawthorne St.
San Francisco, CA 94105-3901

Copies of all reports shall also be provided to the following:

Ms. Marilu Habel
California Department of Oil, Gas and Geothermal Resources
Environmental and Underground Injection Control
801 K Street, MS 20-22
Sacramento, CA 95814-3530

Ms. Christine Boschen
San Francisco Bay Regional Water Quality Board (RWQCB)
District 2 Office
1515 Clay Street, Suite 1400
Oakland, CA 94621

Ms. Nedzlene Ferrario
Solano County Department of Resource Management--Current Planning
675 Texas Street, Suite 5500
Fairfield, CA 94533

F. PLUGGING AND ABANDONMENT

1. Notice of Plugging and Abandonment

The Permittee shall notify EPA no less than sixty (60) days before conversion, workover, or abandonment of any well authorized by this permit. EPA may

require that the plugging and abandonment be witnessed by an EPA representative.

2. Plugging and Abandonment Plans

The Permittee shall plug and abandon the wells (schematics provided in Appendix F), in accordance with the general Plugging and Abandonment Program submitted as Attachment Q to the application and consistent with CDOGGR requirements and 40 CFR §146.10. EPA reserves the right to change the manner in which a well must be plugged if the well is modified during its permitted life or if the well is not consistent with EPA requirements for construction or mechanical integrity. EPA may require the Permittee to update the estimated plugging cost periodically. Such estimates shall be based upon costs which a third party would incur to plug the wells, including mud and disposal costs, with appropriate contingencies.

The Permittee must actively monitor the injected CO_2 plume for at least six months post-injection. Following this period, Permittee has proposed temporary abandonment operations (Appendix F) that must prevent wells C6-1 and C6-2 from serving as potential flow paths. The Permittee may request an extension in temporary abandonment status if justified, as required in paragraph 3 below. Temporary abandonment procedures must be submitted to EPA for review and approval before implementation.

3. Cessation of Injection Activities

After a cessation of injection and monitoring operations, the Permittee must plug and abandon the inactive well(s) in accordance with the Plugging and Abandonment Plans, unless it:

a. Provides notice to EPA; and

b. Has demonstrated that the well(s) will be used in the future; and

c. Has described actions or procedures, satisfactory to EPA, that will be taken to ensure that the well(s) will not endanger underground sources of drinking water during the period of temporary abandonment; and.

d. Has received approval from EPA that it has completed the temporary abandonment construction scheme in Appendix F.

4. Plugging and Abandonment Report

Within sixty (60) days after plugging any well, the Permittee shall submit a report on Form 7520-14, described in Appendix C, to EPA. The report shall be certified

as accurate by the person who performed the plugging operation and shall consist of either:

a. A statement that the well was plugged in accordance with the approved Plugging and Abandonment Plans; or

b. Where actual plugging differed from the Plugging and Abandonment Plans, a statement specifying the different procedures followed.

G. FINANCIAL RESPONSIBILITY

1. Demonstration of Financial Responsibility

The Permittee is required to demonstrate and maintain financial responsibility and resources sufficient to close, plug, and abandon the underground injection operation as provided in the Plugging and Abandonment Plans and consistent with 40 CFR §144 Subpart D, which the Director has chosen to apply.

The Permittee shall post a financial instrument such as a surety bond with a standby trust agreement or arrange other financial assurance for each well constructed in the amount of $1,251,000 per well (total amount of $2,502,000 for wells C6-1 and C6-2), to guarantee closure. Authority to drill and construct any well will not be given until the financial instrument has been posted and approved by EPA. The signed original of each financial instrument must be delivered to EPA Region IX, Ground Water Office.

The financial responsibility mechanism and amount shall be reviewed and updated periodically, upon request of EPA. The Permittee may be required to change to an alternate method of demonstrating financial responsibility. Any such change must be approved in writing by EPA prior to the change.

2. Insolvency of Financial Institution

The Permittee must submit an alternate instrument of financial responsibility acceptable to EPA immediately after either of the following events occurs:

a. The institution issuing the bond or financial instrument files for bankruptcy; or

b. The authority of the trustee institution to act as trustee, or the authority of the institution issuing the financial instrument, is suspended or revoked.

Failure to submit an acceptable financial demonstration will result in the termination of this permit pursuant to 40 CFR §144.40(a)(1).

3. Insolvency of Owner or Operator

An owner or operator must notify EPA by certified mail of the commencement of voluntary or involuntary proceedings under U.S. Code Title 11 (Bankruptcy), naming the owner or operator as debtor, within ten (10) business days. A guarantor of a corporate guarantee must make such a notification if he/she is named as debtor, as required under the terms of the guarantee.

H. DURATION OF PERMIT

This permit and the authorization to inject are issued for a period of two (2) years unless terminated under the conditions set forth in Part III, Section B.1 of this permit.

Part III. GENERAL PERMIT CONDITIONS

A. EFFECT OF PERMIT

The Permittee is allowed to engage in underground injection well construction, operation and monitoring in accordance with the conditions of this permit. The Permittee shall not construct, operate, maintain, convert, plug, abandon, or conduct any other injection activity in a manner that allows the movement of fluid containing any contaminant (as defined by 40 CFR §144.3) into underground sources of drinking water (as defined 40 CFR §§144.3, 146.3).

Furthermore, any underground injection activity not specifically authorized in this permit is prohibited. The Permittee must comply with all applicable provisions of the Safe Drinking Water Act (SDWA) and 40 CFR Parts 144, 145, 146, and 124. Such compliance does not constitute a defense to any action brought under Section 1431 of the SDWA, 42 U.S.C. § 300(i), or any other common law, statute, or regulation other than Part C of the SDWA. Issuance of this permit does not convey property rights of any sort or any exclusive privilege; nor does it authorize any injury to persons or property, any invasion of other private rights, or any infringement of State or local law or regulations. Nothing in this permit shall be construed to relieve the Permittee of any duties under all applicable laws or regulations.

B. PERMIT ACTIONS

1. Modification, Revocation and Reissuance, or Termination

EPA may, for cause or upon request from the Permittee, modify, revoke and reissue, or terminate this permit in accordance with 40 CFR §§124.5, 144.12, 144.39, and 144.40. The permit is also subject to minor modifications for cause as specified in 40 CFR §144.41. The filing of a request for a permit modification, revocation and reissuance, or termination, or a notification of planned changes or anticipated noncompliance by the Permittee, does not stay the applicability or enforceability of any permit condition. EPA may also modify, revoke and reissue, or terminate this permit in accordance with any amendments to the SDWA if the amendments have applicability to this permit.

2. Transfers

This permit is not transferable.

C. SEVERABILITY

The provisions of this permit are severable, and if any provision of this permit or the application of any provision of this permit to any circumstance is held invalid, the application of such provision to other circumstances and the remainder of this permit shall not be affected thereby.

D. CONFIDENTIALITY

In accordance with 40 CFR §§2 and 144.5, any information submitted to EPA pursuant to this permit may be claimed as confidential by the submitter. Any such claim must be asserted at the time of submission by stamping the words "confidential business information" on each page containing such information. If no claim is made at the time of submission, EPA may make the information available to the public or to other organizations without written permission from C6 Resources, LLC. If a claim is asserted, the validity of the claim will be assessed in accordance with the procedures contained in 40 CFR §2 (Public Information). Claims of confidentiality for the following information will be denied:

1. Name and address of the Permittee; or

2. Information dealing with the existence, absence, or level of contaminants in drinking water.

E. GENERAL DUTIES AND REQUIREMENTS

1. Duty to Comply

The Permittee shall comply with all applicable UIC Program regulations and all conditions of this permit, except to the extent and for the duration such noncompliance is authorized by an emergency permit issued in accordance with 40 CFR §144.34. Any permit noncompliance constitutes a violation of the SDWA and is grounds for enforcement action; permit termination, revocation and reissuance, or modification; or denial of a permit renewal application. Such noncompliance may also be grounds for enforcement action under the Resource Conservation and Recovery Act (RCRA).

2. Penalties for Violations of Permit Conditions

Any person who violates a permit requirement is subject to civil penalties, fines, and other enforcement action under the SDWA and may be subject to enforcement actions pursuant to RCRA. Any person who willfully violates a permit condition may be subject to criminal prosecution.

3. Need to Halt or Reduce Activity Not a Defense

It shall not be a defense, for the Permittee in an enforcement action, that it would have been necessary to halt or reduce the permitted activity in order to maintain compliance with the conditions of this permit.

4. Duty to Mitigate

The Permittee shall take all reasonable steps to minimize and correct any adverse impact on the environment resulting from noncompliance with this permit.

5. Proper Operation and Maintenance

The Permittee shall at all times properly operate and maintain all facilities and systems of treatment and control (and related appurtenances) which are installed or used by the Permittee to achieve compliance with the conditions of this permit. Proper operation and maintenance includes effective performance, adequate funding, adequate operator staffing and training, and adequate laboratory and process controls, including appropriate quality assurance procedures. This provision requires the operation of back-up or auxiliary facilities or similar systems only when necessary to achieve compliance with the conditions of this permit.

6. Property Rights

This permit does not convey any property rights of any sort, or any exclusive privilege.

7. Duty to Provide Information

The Permittee shall furnish to EPA, within a time specified, any information which EPA may request to determine whether cause exists for modifying, revoking and reissuing, or terminating this permit, or to determine compliance with this permit. The Permittee shall also furnish to EPA, upon request, copies of records required to be kept by this permit.

8. Inspection and Entry

The Permittee must allow EPA, or an authorized representative, upon the presentation of credentials and other documents as may be required by law, to:

a. Enter upon the Permittee's premises where a regulated facility or activity is located or conducted, or where records are kept under the conditions of this permit;

b. Have access to and copy, at reasonable times, any records that are kept under the conditions of this permit;

c. Inspect and photograph at reasonable times any facilities, equipment (including monitoring and control equipment), practices, or operations regulated or required under this permit; and

d. Sample or monitor at reasonable times, for the purposes of assuring permit compliance or as otherwise authorized by the SDWA, any substances or parameters at any location. In the event that samples are taken, the Permittee may take sample splits.

9. Signatory Requirements

All applications, reports, or other information submitted to EPA shall be signed and certified by a responsible corporate officer or duly authorized representative according to 40 CFR §§122.22 and 144.32.

10. Additional Reporting

a. Planned Changes – The Permittee must give notice to EPA as soon as possible of any planned physical alterations or additions to the permitted facility.

b. Anticipated Noncompliance - The Permittee must give advance notice to EPA of any planned changes in the permitted facility or activity which may result in noncompliance with permit requirements.

c. Compliance Schedules - Reports of compliance or noncompliance with, or any progress reports on, interim and final requirements contained in any compliance schedule of this permit shall be submitted to EPA no later than thirty (30) days following each schedule date.

d. Twenty-four Hour Reporting

i. The Permittee must report to EPA any noncompliance which may endanger health or the environment. Information shall be provided orally within twenty-four (24) hours from the time the Permittee becomes aware of the circumstances. The following information must be reported orally within twenty-four (24) hours:

A) Any monitoring or other information which indicates that any contaminant may cause an endangerment to an underground source of drinking water; and

B) Any noncompliance with a permit condition, or malfunction of the injection system, which may cause fluid migration into or between underground sources of drinking water; and

ii. A written submission of all noncompliance as described in paragraph (c)(i) must also be provided to EPA within five (5) days of the time the Permittee becomes aware of the circumstances. The written submission must contain a description of the noncompliance and its cause; the period of noncompliance, including exact dates and times; if the noncompliance has not been corrected, the anticipated time it is expected to continue; and steps taken or planned to reduce, eliminate, and prevent recurrence of the noncompliance.

e. Other Noncompliance - At the time monitoring reports are submitted, the Permittee must report in writing all other instances of noncompliance not otherwise reported. The Permittee must submit the information listed in Part III, Section E.10(c) of this permit.

f. Other Information - If the Permittee becomes aware that it failed to submit all relevant facts in the permit application, or submitted incorrect information in the permit application or in any report to EPA, the Permittee shall submit such facts or information within two (2) weeks of the time such facts or information becomes known.

11. <u>Continuation of Expiring Permit</u>

a. Duty to Reapply - If the Permittee wishes to continue an activity regulated by this permit after the expiration date of this permit, the Permittee must submit a complete application for a new permit.

b. Permit Extensions - The conditions and requirements of an expired permit continue in force and effect in accordance with 5 U.S.C. §558(c) until the effective date of a new permit, if:

i. The Permittee has submitted a timely and complete application for a new permit; and

ii. EPA, through no fault of the Permittee, does not issue a new permit with an effective date on or before the expiration date of the previous permit.

APPENDIX A - Project Maps

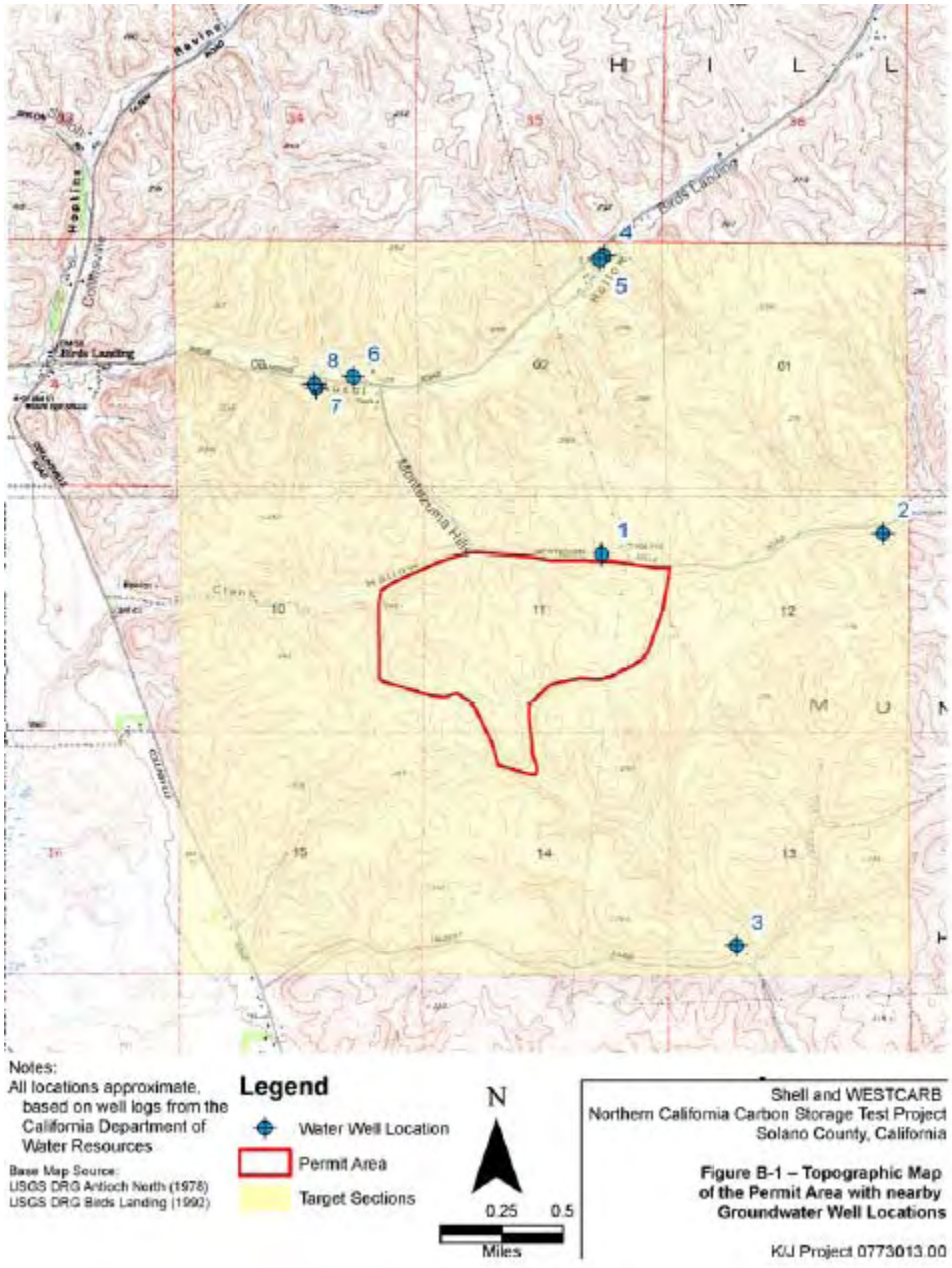

Figure 1. Topographic map of the permit area with nearby groundwater well locations (from Attachment B of the Permit Application).

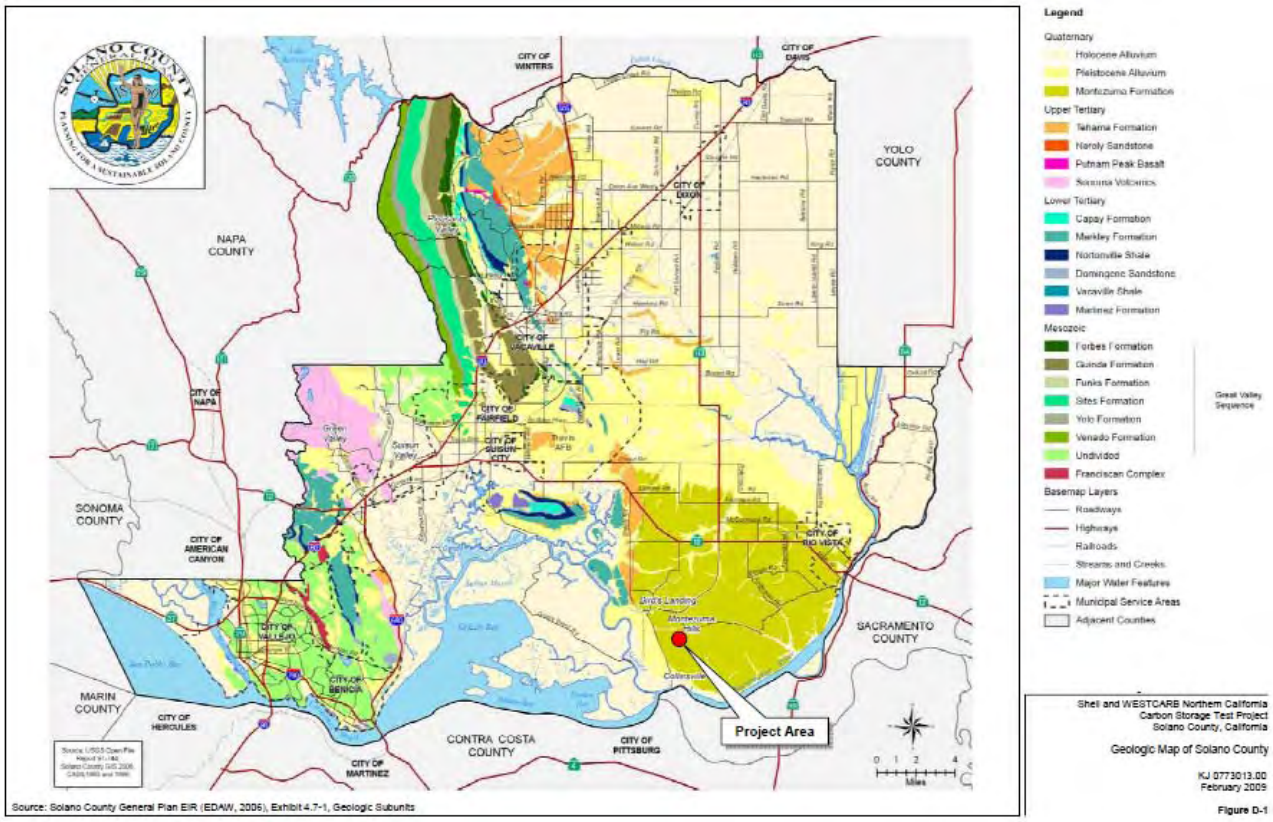

Figure 2. Geologic map of Solano County with Project Area highlighted (from Attachment D of the Permit Application).

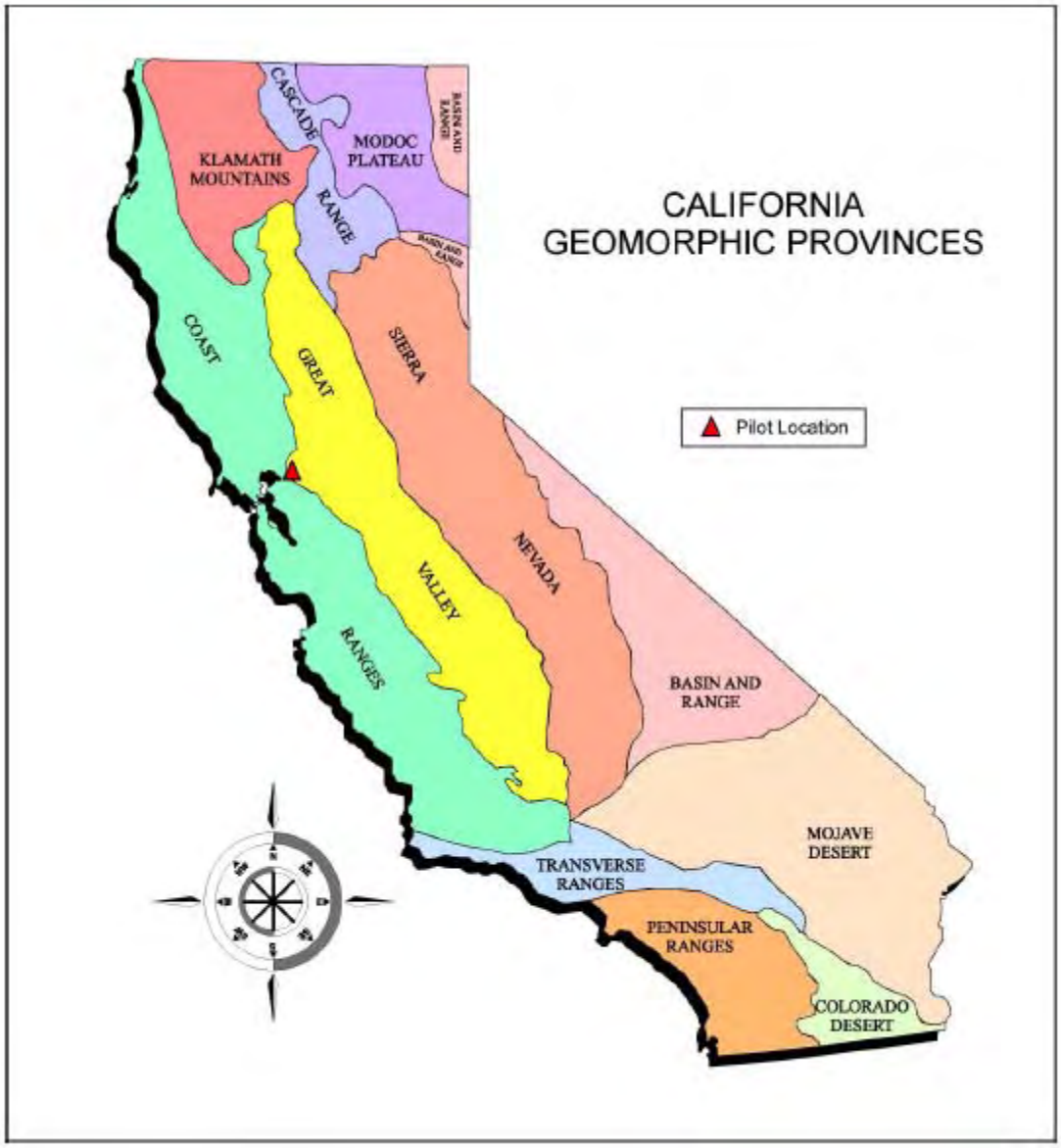

Figure 3. California geomorphic provinces with Pilot Location highlighted (from Attachment F of the Permit Application).

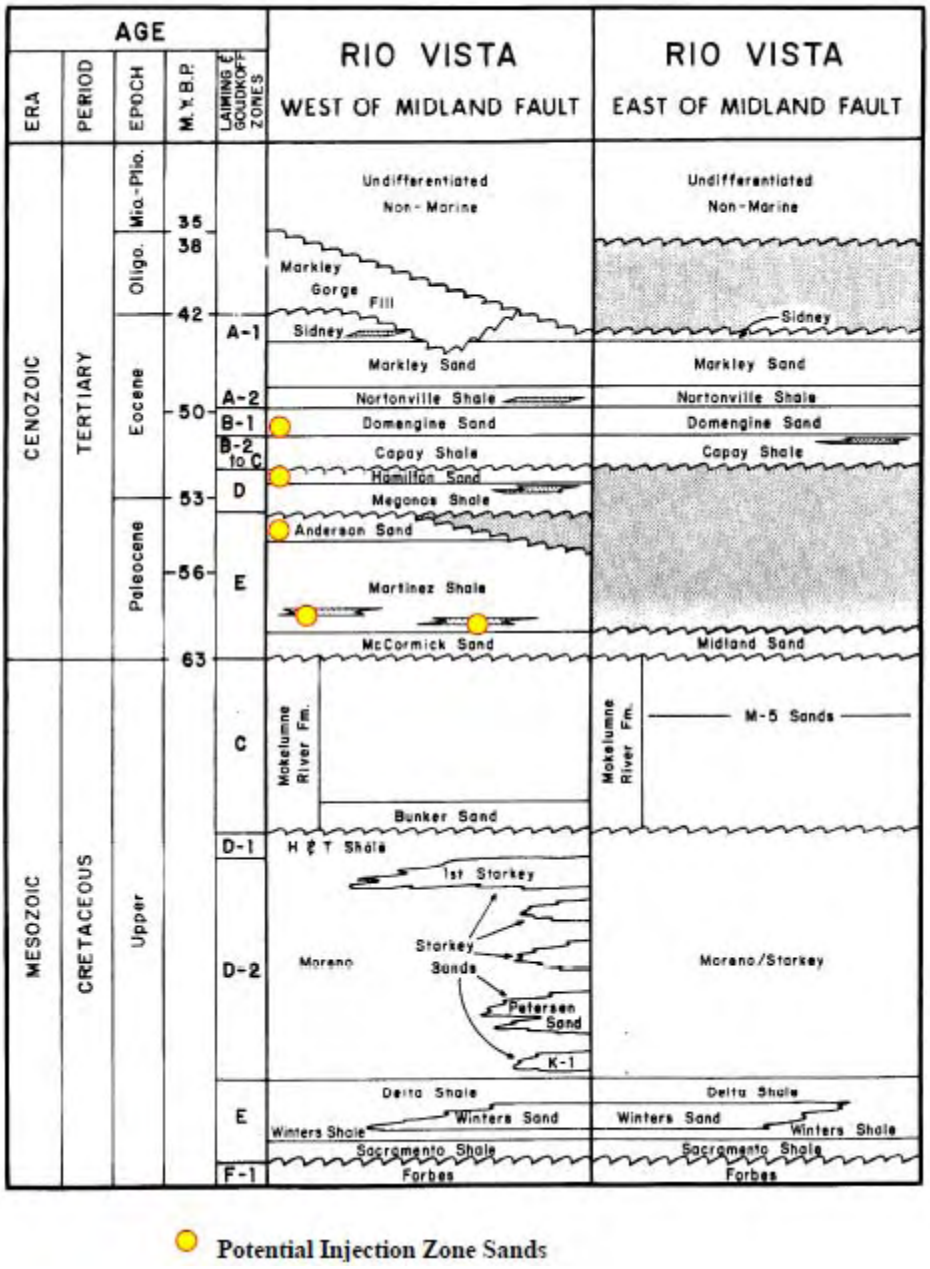

Figure 4. Stratigraphic column for the Rio Vista Field showing potential injection zone sand formations (from Attachment F of the Permit Application).

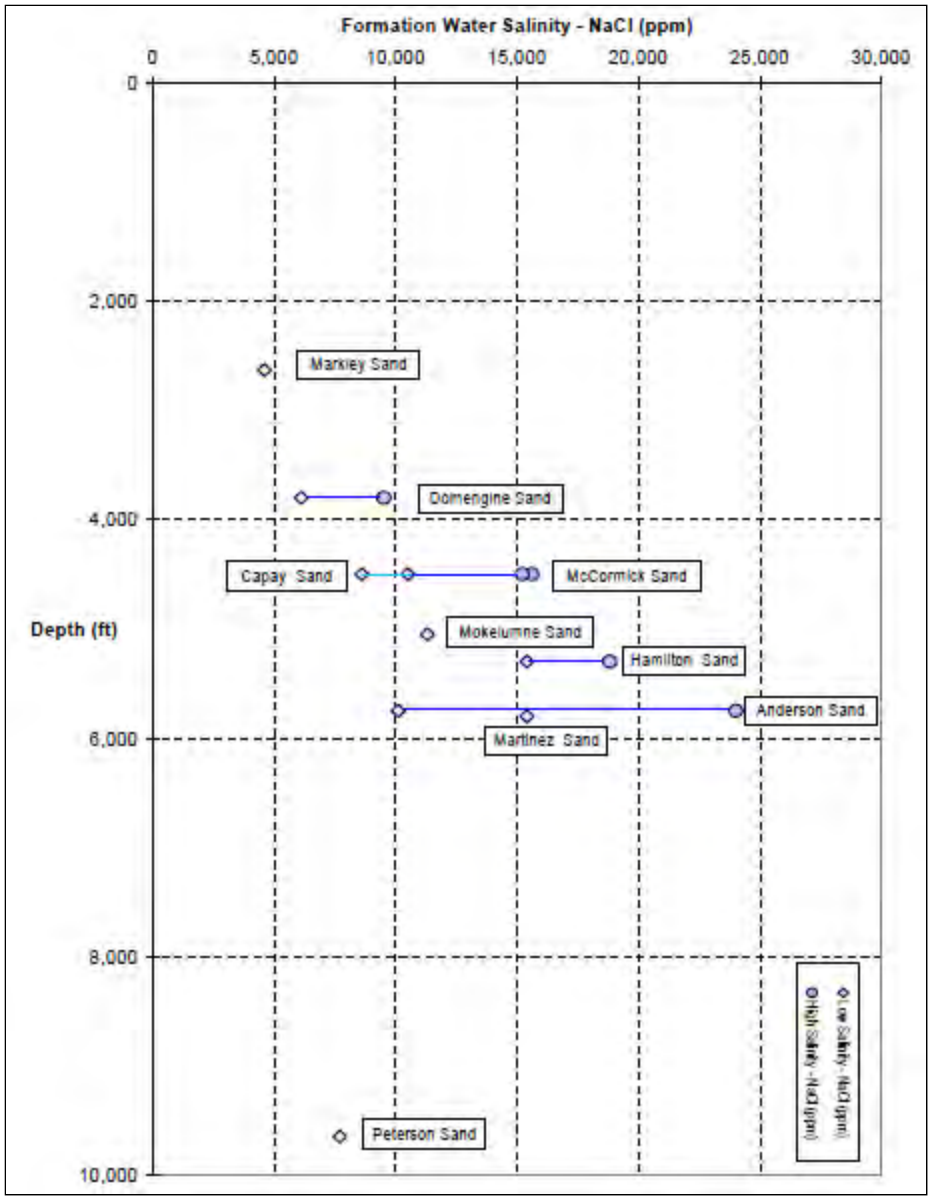

Figure 5. Produced water salinity (NaCl, ppm) in the Rio Vista Field (from Attachment D of the permit application).

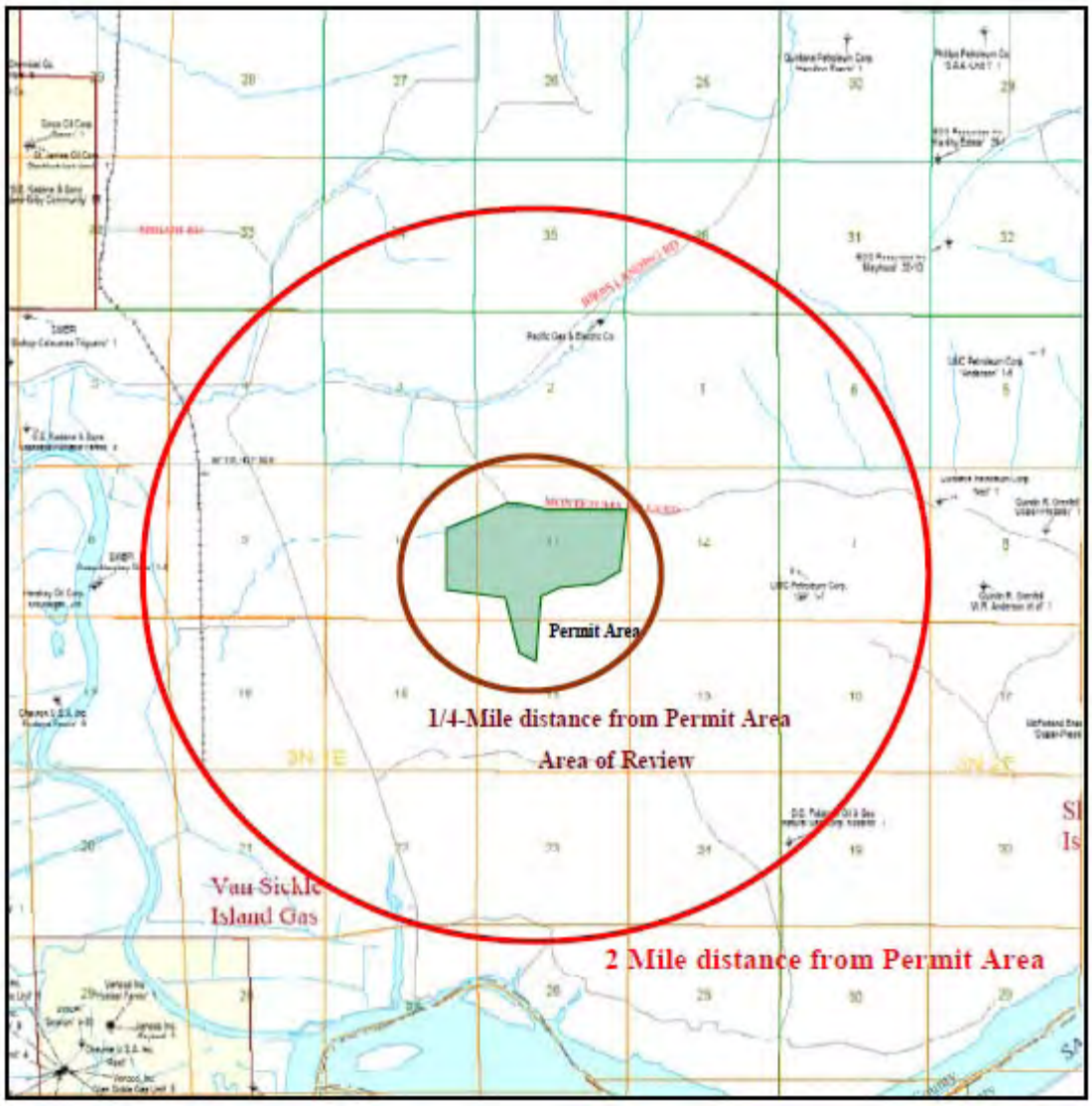

Figure 6. Portion of State of California, Division of Oil, Gas, and Geothermal Resources Map 612 showing Project Area and nearby wells. The three closest wells, "Nat Gas Corp Robbins 11," "1-7 Grandpa Peter," and "Birds Landing 1" are 8,000, 11,800, and 15,400 feet away from the proposed injection area respectively (from Attachment B of the Permit Application).

APPENDIX B – Well Schematics

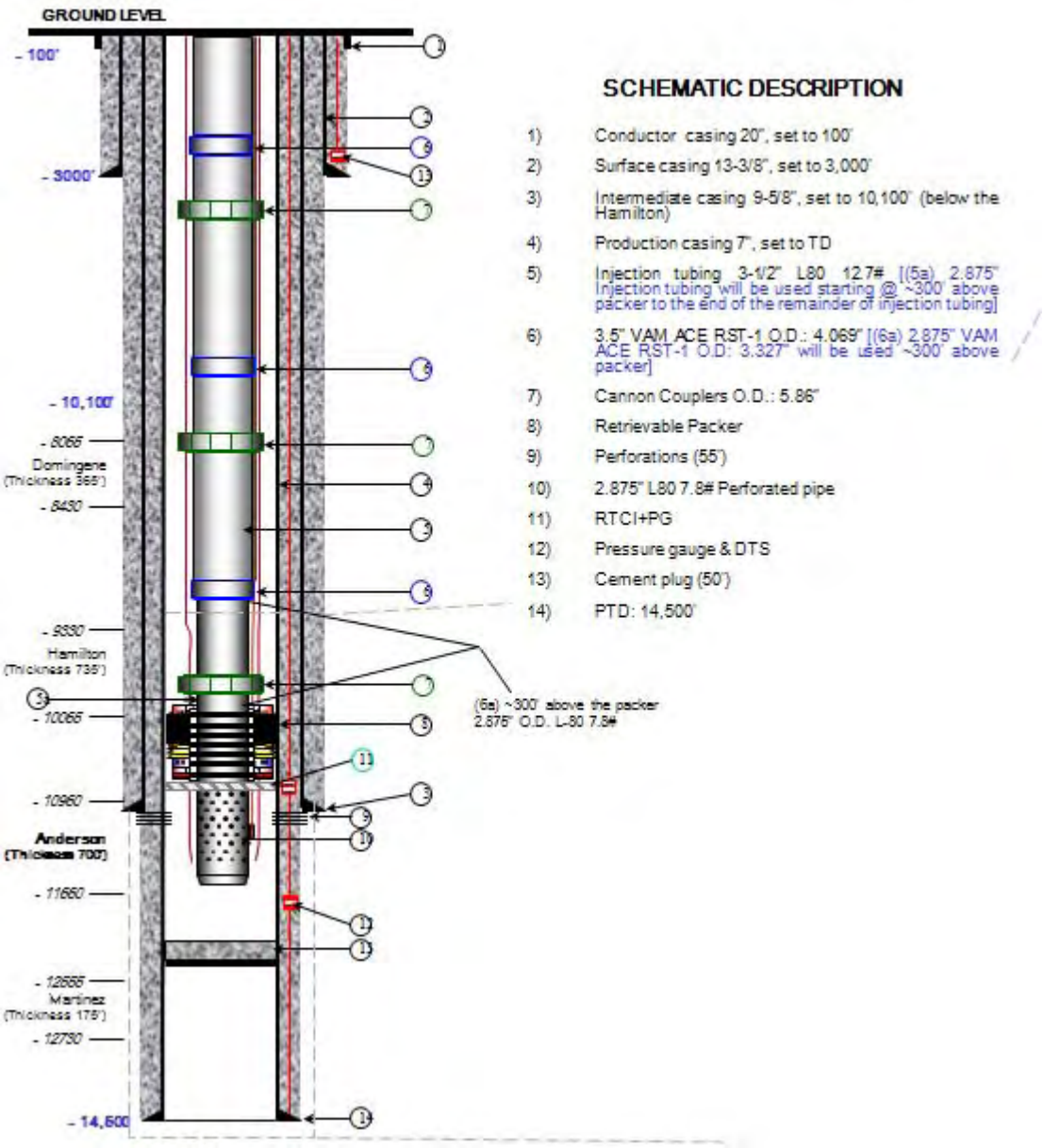

Figure 1. Proposed constuction specifications for injection well C6-1.

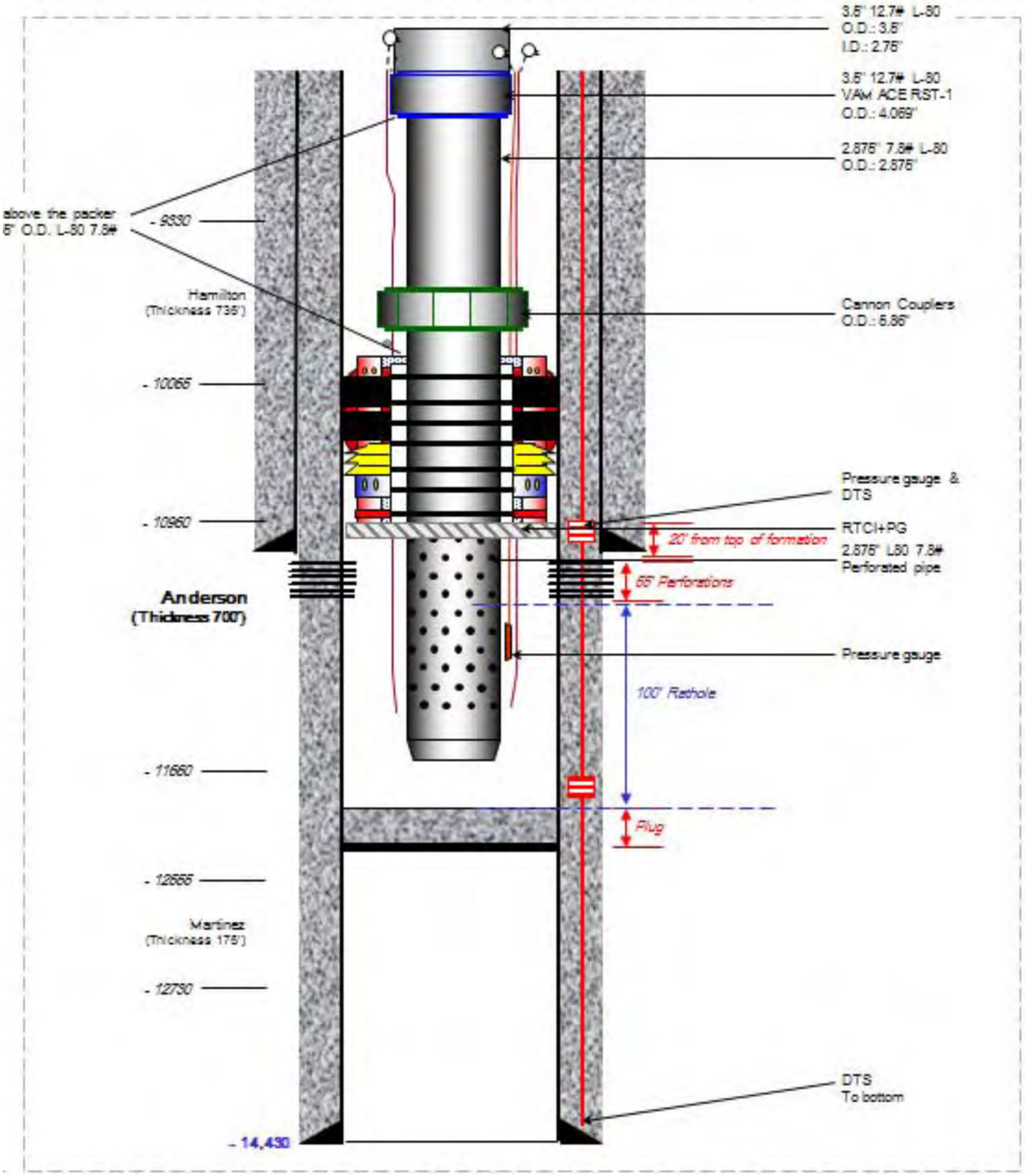

Figure 2. Detail of injection well C6-1 assuming an Anderson Formation completion.

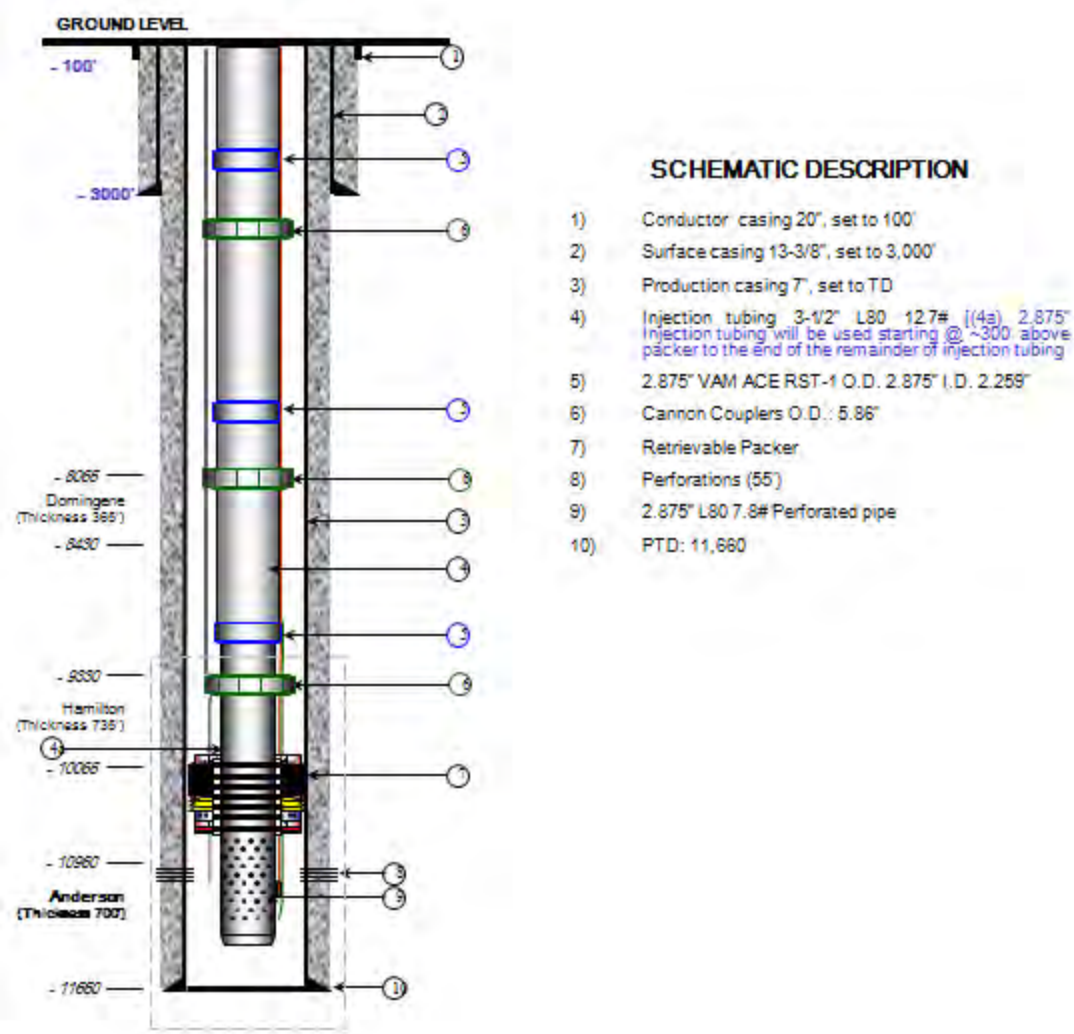

Figure 3. Proposed construction specifications for monitoring well C6-2.

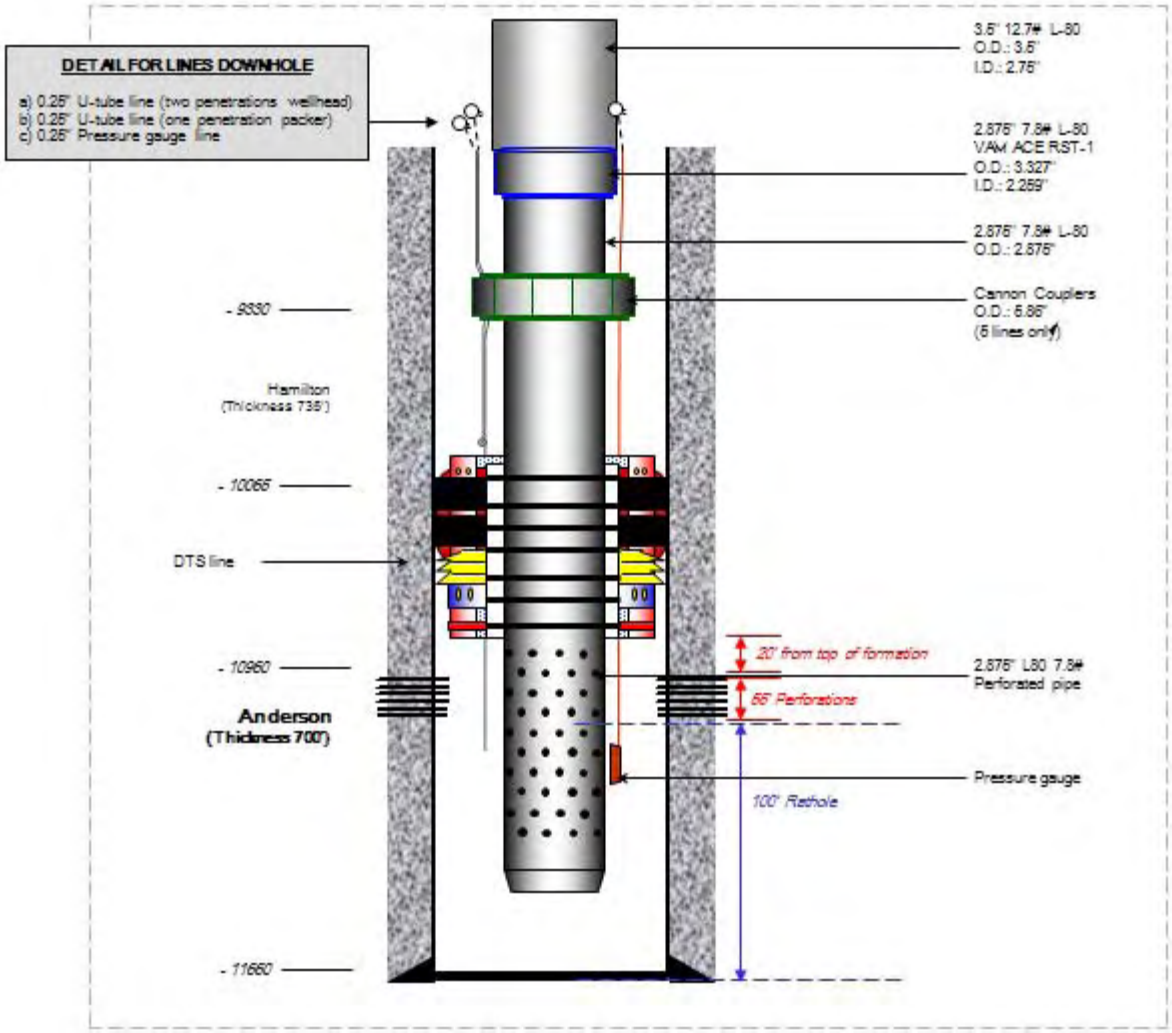

Figure 4. Detail of monitoring well C6-2 assuming an Anderson Formation completion.

APPENDIX C – EPA Reporting Forms

Form 7520-9:	Completion of Construction
Form 7520-11:	Annual Well Monitoring Report
Form 7520-12:	Well Rework Record
Form 7520-14:	Plugging and Abandonment Plan

APPENDIX D – Region 9 Temperature Logging Requirements

A Temperature "Decay" Log (two separate temperature logging passes) must satisfy the following criteria to be considered a valid Mechanical Integrity Test ("MIT") as specified by 40 CFR §146.8(c)(1). Variances to these requirements are expected for certain circumstances, but they must be approved prior to running the log. As a general rule, the well shall inject for approximately six (6) months prior to running a temperature decay progression sequence of logs.

1. With the printed log, also provide raw data for both logging runs (at least one data reading per foot depth) unless the logging truck is equipped with an analog panel as the processing device.
2. The heading on the log must be complete and include all the pertinent information, such as correct well name, location, elevations, etc.
3. The total shut-in times must be clearly shown in the heading. Minimum shut-in time for active injectors is twelve (12) hours for running the initial temperature log, followed by a second log, a minimum of four (4) hours later. These two log runs will be superimposed on the same track for final presentation.
4. The logging speed must be kept between twenty (20) and fifty (50) feet per minute (30 ft/min optimum) for both logs. The temperature sensor should be located as close to the bottom of the tool string as possible (logging downhole).
5. The vertical depth scale of the log should be one (1) or two (2) inches per one-hundred (100) feet to match lithology logs (see 7(b)). The horizontal temperature scale should be no more than one Fahrenheit degree per inch spacing.
6. The right hand tracks must contain the "absolute" temperature and the "differential" temperature curves with both log runs identified and clearly superimposed for comparison and interpretation purposes.
7. The left hand tracks must contain (unless impractical, but EPA must pre-approve any deviations):
    - (a) a collar locator log,
    - (b) a lithology log which includes either:
        - (i) an historic Gamma Ray that is "readable", i.e. one that demonstrates lithologic changes without either excessive activity by the needle or severely dampened responses; or
        - (ii) a copy of an original spontaneous potential ("SP") curve from either the subject well or from a representative, nearby well.
    - (c) A clear identification on the log showing the base of the lowermost Underground Source of Drinking Water ("USDW"). A USDW is basically a formation that contains less than ten thousand (10,000) parts per million ("ppm") Total Dissolved Solids ("TDS") and is further defined in 40 CFR §144.3.

APPENDIX E - Region 9 UIC Pressure Falloff Requirements

For reference please refer to:

http://www.epa.gov/region09/water/groundwater/uic-docs/falloff-testing-guidlines.pdf

APPENDIX F - Plugging and Abandonment Plans

Upon completion of injection activities the well(s) shall be abandoned according to State and Federal regulations to ensure protection of Underground Sources of Drinking Water.

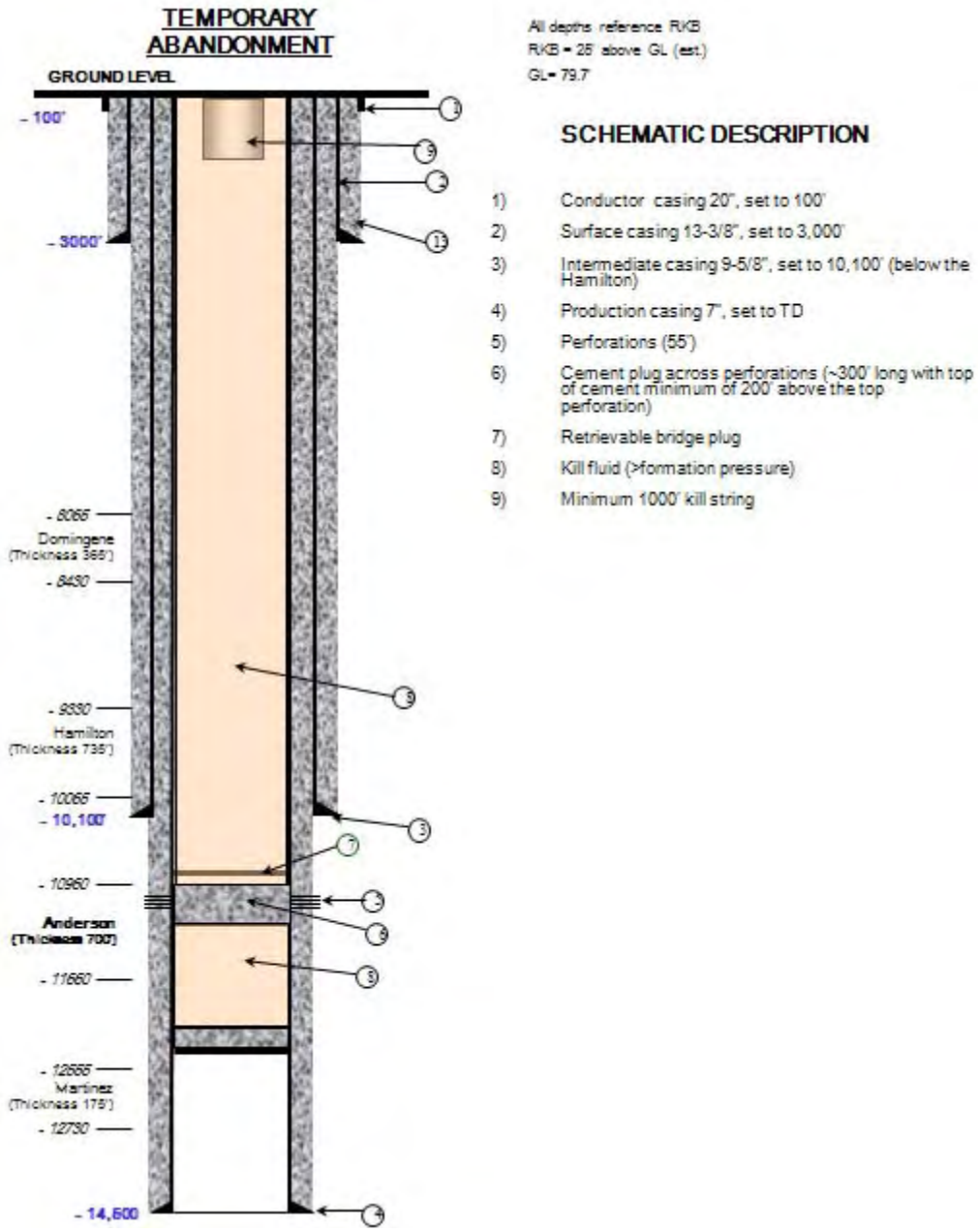

Figure 1. Temporary Plugging and Abandonment plan schematic for wells C6-1 and C6-2.

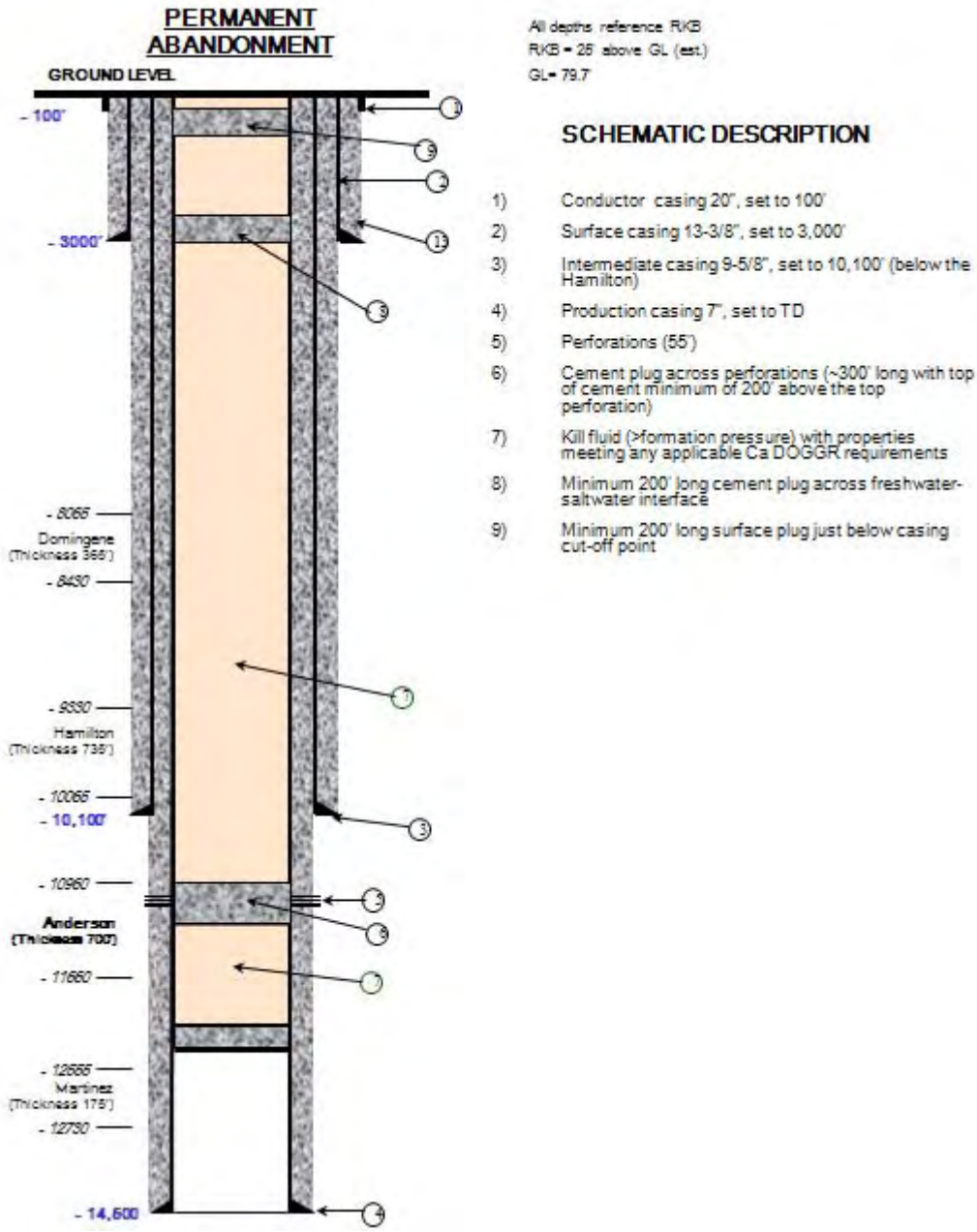

Figure 2. Permanent Plugging and Abandonment plan schematic for wells C6-1 and C6-2.

APPENDIX G –
REGION 9 Step Rate Test Policy

For reference please refer to:
Society of Petroleum Engineers (SPE) Paper #16798, Systematic Design and Analysis of Step-Rate Tests To Determine Formation Parting Pressure (This paper may be obtained from the SPE.)

APPENDIX H – CO_2 Specifications and Potential Tracers

Component	Standard
Purity	95% v/v min.
Moisture	30 pounds of water per mmcf
Oxygen	10 ppm by weight, max.
Nitrogen	4 mole %
Hydrocarbons	5 mole %
Total sulfur content	35 ppm by weight, max.
Hydrogen Sulfide	20 ppm by weight, max.

* From Kinder Morgan
** ppm = parts per million

Table 1. Typical commercial grade CO_2 specifications (from Attachment P of the Permit Application).

Tracer	Concen-tration (injectate)	Concen-tration (produced fluids)	Maximum Expected Total Weight	Comments
FLUTEC-TG PMCH (perfluoromethylcyclohexane)	30 ug/mL (30 ppm)	1 ng/mL (1 ppb)	Maximum total Perfluoro-carbons: 60 kg.	No known human-or eco-toxicity
FLUTEC-TG PTMCH (perfluoro-1,3,5-trimethylcyclohexane)	30 ug/mL (30 ppm)	1 ng/mL (1 ppb)	Maximum total Perfluoro-carbons: 60 kg.	No known human-or eco-toxicity
FLUTEC-TG o-PDMCH (perfluoro-1,2-dimethylcyclohexane)	30 ug/mL (30 ppm)	1 ng/mL (1 ppb)	Maximum total Perfluoro-carbons: 60 kg.	No known human-or eco-toxicity
FLUTEC-TG m-PDMCH (perfluoro-1,3-dimethylcyclohexane)	7 ug/mL (7 ppm)	0.2 ng/mL (0.2 ppb)	Maximum total Perfluoro-carbons: 60 kg.	No known human-or eco-toxicity
FLUTEC-TG p-PDMCH (perfluoro-1,4-dimethylcyclohexane)	7 ug/mL (7 ppm)	0.2 ng/mL (0.2 ppb)	Maximum total Perfluoro-carbons: 60 kg.	No known human-or eco-toxicity
FLUTEC-TG PMCP (perfluoromethylcyclopentane)	30 ug/mL (30 ppm)	1 ng/mL (1 ppb)	Maximum total Perfluoro-carbons: 60 kg.	No known human-or eco-toxicity
FLUTEC-TG PDMCB (perfluorodimethylcyclobutane)	7 ug/mL (7 ppm)	0.2 ng/mL (0.2 ppb)	Maximum total Perfluoro-carbons: 60 kg.	No known human-or eco-toxicity
FLUTEC-TG PECH (perfluoroethylcyclohexane)	7 ug/mL (7 ppm)	0.2 ng/mL (0.2 ppb)	Maximum total Perfluoro-carbons: 60 kg.	No known human-or eco-toxicity
^{20}Ne (Neon 20)	30.3 ppm	Variable	0.63 kg	No known human-or eco-toxicity
^{36}Ar (Argon 36)	164 ppm	Variable	3.42 kg	No known human-or eco-toxicity
^{84}Kr (Krypton 84)	7.64 ppm	Variable	0.16 kg	No known human-or eco-toxicity
^{132}Xe (Xenon 132)	0.4 ppm	Variable	0.01 kg	No known human-or eco-toxicity
Fluorescein and/or Eosin	1 ppm	5 ppb	10kg	No known human- or eco-toxicity

*ppm = parts per million, ppb = parts per billion

Table 2. Potential tracers used during injection and well testing (from Attachment P of the Permit Application).

APPENDIX I: OPERATIONS TIMELINE

Activity ID	Activity Name	Current Duration (Wks)
Demonstration Project		
Site Prep		
DMP1010	Well Pad Construction	6
Drilling		
DMP1080	Drill Injection Well	11
DMP1110	Test (includes Injection Test, SRT, and FOTs)	2
DMP1100	Drill Observation Well	4
Completions		
DMP1090	Well Completions	4
Facilities		
DMP1200	US EPA CO_2 Injection Approval	12
DMP1210	CO_2 Pumping	8
DMP1220	CO_2 Monitoring	24
DMP1230	Decommissioning and TA	8

The timeline depicted does not include the durations for notice to EPA, and EPA review and approval.