STANDARD FORM 2 FEBRUARY 1965 EDITION GENERAL SERVICES ADMINISTRATION FPR (41 CFR) 1-16.601	**U.S. GOVERNMENT** **LEASE FOR REAL PROPERTY**

DATE OF LEASE MAY 10 2001	LEASE NO. GS-05B-16837

THIS LEASE, made and entered into this date by and between

North Bogey Properties, LLC

whose authorized representative is Mr. Tom Bowen

whose address is 456 E. 16th Street
Holland, Michigan 49423

and whose interest in the property hereinafter described is that of owner, hereinafter called the Lessor, and the UNITED STATES OF AMERICA, hereinafter called the Government:

WITNESSETH: The parties hereto for the consideration hereinafter mentioned, covenant and agree as follows:

1. The Lessor hereby leases to the Government the following described premises:

   3,500 rentable square feet (3,058 net usable square feet) of ground floor office space in a build-to-suit, single tenant building, along with 13 surface on-site parking spaces, all located on a site just south of 1700 S. Mitchell (Address of the building to be determined as shown on the attached site plan (labeled "Exhibit "B") to be used for such purposes as determined by the General Services Administration.

2. TO HAVE AND TO HOLD the said premises with their appurtenances for the term beginning on April 1, 2002 through March 31, 2012, subject to termination and renewal rights as may be hereinafter set forth.

3. The Government shall pay the Lessor annual rent of $108,950.00 ($35.63/usable square foot, $31.13/rentable square foot) at the rate of $9,079.17 per month in arrears. Rent for a lesser period shall be prorated. Rent checks shall be made payable to:

   North Bogey Properties, LLC
   Attn: Tom Bowen
   456 E. 16th Street
   Holland, Michigan 49423

   As part of the rental consideration, the Lessor shall perform all responsibilities and obligations as defined in this lease which includes the attachments specified in Paragraph 5 below.

4. The Lessor shall furnish to the Government, as part of the rental consideration, the following:

   All services, utilities and maintenance of the building and grounds. Also, as part of the rental consideration, the Lessor shall meet all responsibilities and obligations as defined in the Solicitation of Offers NO. GS-05B-16837 and other attachments to the Lease, including but not limited to providing thirteen (13) parking spaces for the Government, as well as meeting all handicapped Accessibility and Fire/Life Safety Requirements.

5. The following are attached and made a part hereof:

   (A) Paragraphs 12 through 22 of this lease on pages 3 and 4; (B) Solicitation of Offers NO GS-05B-16837 dated 8/18/00, pages 1 through 70; (C) Exhibit A, Block Plan and Building Elevation Sketch; (D) Exhibit B, Site Plan; (E) GSA Form 3517B (REV. 12/99) consisting of 26 pages; (F) GSA Form 3518 (Rev 12/99) consisting of 4 pages; and (G) Labor Rates for Wexford County, Michigan per paragraph 20 below.

6. The date of this lease is the date this contract was formed as a result of the Government's acceptance of the Lessor's Best and Final Offer dated 3/7/2001, submitted by the Lessor under SFO GS-05B-16837. This lease reflects the terms and conditions of the accepted Best and Final Offer.

7. Cost adjustments and termination rights shall be adjusted to coincide with any revised actual commencement date. The commencement date of April 1, 2002 as stated in Paragraph 2 of the lease is the estimated beginning date. The actual commencement date will be established by Supplemental Lease Agreement to the lease if necessary. The lease will then be in effect for 10 years firm, subject to termination rights as specified in the lease. The anniversary date for annual escalations, operating cost adjustments and termination rights shall be adjusted to coincide with any revised actual commencement date.

8. The Lessor will construct the building and alter the space ready for occupancy no later than 270 calendar days from the date of award or receipt of plans, and samples, whichever is later. GSA shall deliver layout drawings and necessary finish selections to the Lessor within 100 days after award.

9. The total net usable square foot area referred to in Paragraph 1, is subject to adjustment, but may not be less than the minimum net usable square footage nor exceed the maximum limitation defined in the Solicitation for Offers. Should there be any adjustments in the usable square footage delivered, that has been determined through mutual field measurement, the per annum rental referred to above shall be adjusted on the basis of $35.63 per usable square foot per annum. The lease shall be amended by Supplemental Lease Agreement after actual field measurement to establish the square footage and rental in compliance with the terms of the lease.

10. The rent is subject to annual operating cost adjustments in accordance with Section 3, Paragraph 3.6 (A through E) of Solicitation for Offers NO. GS-05B-16837 within this lease. It is understood and agreed that for operating cost adjustment purposes, the first year's operating cost will be (b) (4) [redacted] ft. of space.

11. It is understood and agreed that for real estate tax adjustment purposes, in accordance with Section 3, Paragraph 3.4 (a through g) of Solicitation for Offers NO. GS-05B-16837 within this lease, the Government will occupy 100 percent of the net usable square foot area of the building.

IN WITNESS WHEREOF, the parties hereto have hereunto subscribed their names as of the date first above written.

LESSOR North Bogey Properties, LLC

BY (b) (6) [redacted] (Signature) MANAGING MEMBER

(Signature)

IN PRESENCE OF:

(b) (6) [redacted] (Signature)

456 E. 16th STREET, HOLLAND, MI 49423 (Address)

UNITED STATES OF AMERICA GENERAL SERVICES ADMINISTRATION

BY (b) (6) [redacted] Glenn Deacon (Signature)

Contracting Officer (Official title)

12. The following unit cost will be referenced to determine the cost of adjustments necessary for the use of more or less materials than the amount required in Solicitation for Offers NO. GS-05B-16837, either the credit due the Government for using less materials or the lump-sum due the Lessor for furnishing additional materials installed in accordance with the final layout drawing:

Floor Duplex electrical outlet
Wall Duplex electrical outlet
Floor Quadruplex electrical
Wall Quadruplex electrical
Dedicatied Clean Duplex
Dedicated Clean Fourplex
Dedicated clean electrical computer receptacle
Floor Telephone
Wall Telephone
Floor mounted data outlet
Wall mounted data outlet
Wall mounted data/telephone combo outlet
Power Feeds to modular furniture
GFI outlet
IG outlet
Partition ceiling high sanded, taped and painted (per lf.)
Partition ceiling high sanded, taped and wallpapered (per lf)
Slab-to-Deck Partitions
Interior Doors (including hardware, frame and finished)
Half walls sanded, taped and painted (per lf.)
Half walls sanded, taped and wallpapered (per lf.)

(b) (4) [redacted]

13. If heating, or cooling, is required by the Government on an overtime basis, it s[redacted]per hour.

14. Lessor shall not construct, change, alter, remove, or add to the leased area without prior notification and approval from the General Services Administration (the Contracting Officer or his/her representative).

15. If the property housing the leased premises is sold or transferred, the following information is required before the Government can acknowledge the success in interest and change the payee for rent or other payments:

    (I) Evidence of the transfer of title.
    (II) A letter from successor Lessor (transferee) assuming, approving and adopting the lease and agreeing to be bound by its terms.
    (III) A letter from prior Lessor (transferor) waiving all rights under the lease as against the United States of America, except unpaid rent through a specified date, usually the date of ownership transfer.
    (IV) The IRS tax identification number of the new owner.

    Where leased premises are transferred by death of the Lessor, a copy of the letters of administration when there is no will, showing the Lessor(s), is required. Unless an interim court order is received, rents will be accrued and paid the new owner(s) upon final settlement of the estate.

16. The Tax Identification Number for the real estate parcels occupied under this lease is 83-10-106-00-003-03.

17. All questions pertaining to this lease should be referred to the Contracting Officer of the General Services Administration or his/her designee. The Government occupant is not authorized to administer this lease. The General Services Administration assumes no responsibility for any cost incurred by the Lessor except as provided by the terms of this lease or authorized in writing by the Contracting Officer or his/her designee.

18. All terms and conditions of this Lease as expressly contained herein represent the total obligations of the Lessor and the Government. Any agreements, written or oral between the Lessor and Government prior to the execution of this Lease are not applicable or binding. This agreement may be amended only by written instrument executed by the Lessor and Government.

19. The Lease Common Area Factor is 1.1445 (3,058 usable square feet multiplied by 1.1445 equals 3,500 rentable square feet of space).

20. Attached to this lease are the Department of Labor current wage labor rates for Wexford County, Michigan consisting of 3 pages (Exhibit G). As required by Paragraph 1.16, page 8 and Paragraph 3.19, page 15 of the Solicitation for Offers GS-05B-16837, which is made part of this Lease, the Lessor is required to pay prevailing wage rates established for the construction area, as determined by the Department of Labor. It is the Lessor's responsibility to determine what the current wage rates are at the time of construction in the area of the construction for the Department of Labor and to use those rates to comply with Paragraphs 1.6 and 3.19 of the Solicitation for Offers GS-05B-16837.

21. The Contracting Officer represents that the General Services Administration as an agent with authority to enter into this Lease on behalf of the Government and executes this document in his or her Official capacity only, and not as an individual.

22. Lessor Acknowledges that the Block Plan and Building sketch submitted by Lessor, and attached to this Lease as Exhibit A, are subject to change by the Government. In particular: 1) The Lessor shall provide at no extra cost to the Government a total of 18 windows and window coverings (15 are shown on Exhibit A) and 2) The interior Block Plan submitted by the Lessor shows the Lessor's concept of the interior space plan and not one approved by the Government. The Lessor acknowledges that the Government will supply the Lessor with approved interior space plans, pursuant to terms in the Solicitation for Offers GS-05B-16837, for the Lessor to use to develop his construction plans.

SOLICITATION FOR OFFERS

THE GENERAL SERVICES ADMINISTRATION

GS-05B-16837

CADILLAC, MICHIGAN

NAME: Peppi Wilson (b) (6) [redacted]

TITLE: Contracting Officer

The information collection requirements contained in this Solicitation/Contract, that are not required by regulation, have been approved by the Office of Management and Budget pursuant to the Paperwork Reduction Act and assigned the OMB Control No. 3090-0163.

TABLE OF CONTENTS

1. 0 SUMMARY 5
1.1. AMOUNT AND TYPE OF SPACE (JAN 1997) 5
1.2. PARKING/TRANSPORTATION 5
1.3. AREA OF CONSIDERATION 5
1.4. LOCATION: INSIDE OR OUTSIDE CITY CENTER (JAN 1997) 5
1.5. LEASE TERM 6
1.6. OFFER DUE DATE 6
1.7. OCCUPANCY DATE 6
1.8. HOW TO OFFER (JAN 1997) 6
1.9. PLANS WITH OFFER (JAN 1997) 7
1.10. NEGOTIATIONS (JAN 1997) 7
1.11. PRICE EVALUATION (PRESENT VALUE) (JAN 1997) 7
1.12. HISTORIC PREFERENCE, GSAR 552.270-4 (JUN 1994) (VARIATION) 8
1.13. AWARD (JAN 1997) 8
1.14. ACCESSIBILITY FOR NEW CONSTRUCTION (JAN 1997) 8
1.15. SEISMIC SAFETY FOR NEW CONSTRUCTION (JAN 1997) 8
1.16. LABOR STANDARDS (JAN 1997) 9
1.17. LOCATION IN THE BUILDING 9

2. 0 AWARD FACTORS 9
2.1. ACCESSIBILITY (JAN 1997) 9
2.2. ACCESSIBILITY AND SEISMIC SAFETY (JAN 1997) 10
2.3. AWARD BASED ON PRICE (DEC1996) 11

3. 0 MISCELLANEOUS 11
3.1. UNIT COSTS FOR ADJUSTMENTS 11
3.2. ALTERATIONS $100,000 OR LESS (JAN 1997) 12
3.3. ALTERNATE PROPOSALS 12
3.4. TAX ADJUSTMENT, GSAR 552.270-24 (AUG 1992) 12
3.5. PERCENTAGE OF OCCUPANCY 13
3.6. OPERATING COSTS GSAR 552.270-23 (JUN 1985) 13
3.7. OPERATING COSTS BASE (JAN 1997) 14
3.8. RENTABLE SPACE (JUN 1994) 14
3.9. BOMA USABLE SQUARE FEET (JAN 1997) 14
3.10. COMMON AREA FACTOR (JAN 1997) 14
3.11. APPURTENANT AREAS 14
3.12. LIQUIDATED DAMAGES, GSAR 552.270-22 (AUG 1992) 14
3.13. ADJUSTMENT FOR VACANT PREMISES, GSAR 552.270-25 (JUN 1994) (VARIATION) 14
3.14. RELOCATION ASSISTANCE ACT 14
3.15. EVIDENCE OF CAPABILITY TO PERFORM 15
3.16. CONSTRUCTION SCHEDULE 15
3.17. PROGRESS REPORTS 15
3.18. CONSTRUCTION INSPECTIONS 15
3.19. MISCELLANEOUS LABOR CLAUSES (AUG 1994) 15
3.20. SIGNAGE 19

4. 0 GENERAL ARCHITECTURAL 19
4.1. QUALITY AND APPEARANCE OF BUILDING EXTERIOR 20
4.2. WORK PERFORMANCE 20
4.3. BUILDING SYSTEMS (JAN 1997) 20
4.4. SPACE EFFICIENCY 20
4.5. FLOOR PLANS AFTER OCCUPANCY 20
4.6. CAD AS-BUILT FLOOR PLANS (JAN 1997) 20
4.7. FLOORS AND FLOOR LOAD (JAN 1997) 20
4.8. EXITS AND ACCESS (SEP 1991) 20
4.9. WINDOWS (SEP 1991) 20
4.10. ACCESSIBILITY (JAN 1997) 20
4.11. LANDSCAPING (OCT 1996) 20

5. 0 ARCHITECTURAL FINISHES 20
5.1. BUILDING FINISHES 21
5.2. LAYOUT AND FINISHES 21
5.3. CEILINGS (SEP 1991) 21
5.4. DOORS: EXTERIOR (DEC 1992) 21

INITIALS: _____ & _____
LESSOR GOV'T

5.5. DOORS: INTERIOR (SEP 1991) 21
5.6. DOORS: HARDWARE (MAR 1999) 21
5.7. DOORS AND LOCKS 21
5.8. DOORS: AUTOMATIC OPENERS (JUNE 1999) 21
5.9. DOORS: IDENTIFICATION 22
5.10. PARTITIONS: GENERAL 22
5.11. PARTITIONS: PERMANENT (SEP 1991) 22
5.12. PARTITIONS: SUBDIVIDING (OCT 1999) 22
5.13. WALL COVERINGS (SEP 1991) 22
5.14. FLOOR COVERING AND PERIMETERS (DEC 1991) 23
5.15. CARPET TILE (APRIL 2000) 23
5.16. SLAB PREPARATION FOR CARPET AND VINYL TILE (APRIL 2000) 24
5.17. RESILIENT FLOORING (JUN 1999) 24
5.18. ACCUSTICAL REQUIREMENTS (JAN 1997) 24
5.19. WINDOW COVERINGS (SEP 1991) 24
5.20. CLOSETS 25

6. 0 MECHANICAL, ELECTRICAL, PLUMBING 25
6.1. MECHANICAL, ELECTRICAL, PLUMBING: GENERAL 25
6.2. ENERGY COST SAVINGS (JAN 1997) 25
6.3. DRINKING FOUNTAINS 25
6.4. TOILET ROOMS (JAN 1997) 25
6.5. TOILET ROOMS: FIXTURE SCHEDULE (OCT 1996) 25
6.6. JANITOR CLOSETS 26
6.7. HEATING AND AIR CONDITIONING (JAN 1997) 26
6.8. VENTILATION (OCT 1996) 27
6.9. VENTILATION: TOILET ROOMS (DEC 1993) 27
6.10. ELECTRICAL: ADDITIONAL DISTRIBUTION SPECIFICATIONS 27

7. 0 TELEPHONE 27
7.1. TELEPHONE EQUIPMENT 27
7.2. TELEPHONE CONDUIT 28
7.3. DATA DISTRIBUTION (JAN 1997) 28
7.4. ELECTRICAL, TELEPHONE, DATA FOR SYSTEMS FURNITURE (JAN 1997) 28

8. 0 ELECTRICAL 28
8.1. ELECTRICAL: GENERAL 28
8.2. LIGHTING: INTERIOR (JAN 1997) 28
8.3. LIGHTING: EXTERIOR (JUN 1999) 28
8.4. SWITCHES (JAN 1997) 29
8.5. ADDITIONAL ELECTRICAL CONTROLS 29
8.6. ELEVATORS (JAN 1997) 29
8.7. ELECTRICAL DISTRIBUTION 29
8.8. ELECTRCAL EQUIPMENT 30
8.9. UNDERFLOOR DUCT SYSTEM 30
8.10. ELECTRICAL: ADDITIONAL INFORMATION/IWS LAN CONFIGURATION 31
8.10.1 IWS/LAN CONFIGURATION--GENERAL INFORMATION 31
8.10.2 IWS LAN/HEATING, VENTILATION, AND AIR CONDITIONING (HVAC) REQUIREMENTS 31
8.10.3 IWS LAN/MATERIALS AND EQUIPMENT TO BE PROVIDED BY THE LESSOR AS PART OF THE LEASE 31
8.10.4 IWS LAN/SITE PREPARATION 31
8.10.5 IWS LAN/SOCIAL SECURITY ADMINISTRATION MODULAR FURNITURE INSTALLATION MODIFICATIONS TO SITE 34
8.10.6 IWS LAN/DEFINITION OF TERMS SSA OFFICIAL POLICY 39
8.10.7 IWS LAN/ATTACHMENTS 40

9. 0 SPECIFIC ROOM INFORMATION 40
9.1. PRIVATE OFFICES (JUN 1999) 40
9.2. ADP ROOM 40
9.3. MULTIPURPOSE ROOM 41
9.4. STORAGE ROOM 41
9.5. EMPLOYEE RESTROOMS 41
9.6. RECEPTION AREA 41
9.7. VIDEO TELECONFERENCE ROOM 43

10. 0 SERVICES, UTILITIES, MAINTENANCE 44
10.1. SERVICES, UTILITIES, MAINTENANCE: GENERAL 44
10.2. NORMAL HOURS 44
10.3. OVERTIME USAGE (JAN 1997) 44

10.4. OVERTIME USAGE (JAN 1997) 44
10.5. UTILITIES 44
10.6. UTILITIES: SEPARATE FROM RENTAL (JAN 1997) 44
10.7. JANITORIAL SERVICES (JAN 1997) 44
10.8. JANITORIAL SERVICES (JAN 1997) 44
10.9. SCHEDULE OF PERIODIC SERVICES 45
10.10. MAINTENANCE AND TESTING OF SYSTEMS (OCT 1996) 45
10.11. SECURITY 46
10.12. SECURITY: ADDITIONAL REQUIREMENTS 46
10.13. BUILDING OPERATING PLAN 46
10.14. LANDSCAPE MAINTENANCE 46

11. 0 SAFETY AND ENVIRONMENTAL MANAGEMENT 46
11.1. OCCUPANCY PERMIT (OCT 1996) 46
11.2. FIRE AND LIFE SAFETY (OCT 1996) 46
11.3. PORTABLE FIRE EXTINGUISHERS (OCT 1999) 46
11.4. SPRINKLER SYSTEM (OCT 1996) 46
11.5. MANUAL FIRE ALARM SYSTEMS (OCT 1996) 47
11.6. OSHA REQUIREMENTS (OCT 1996) 47
11.7. ASBESTOS (OCT 1996) 47
11.8. ASBESTOS (OCT 1996) 47
11.9. INDOOR AIR QUALITY (OCT 1996) 47
11.10. RADON IN AIR (OCT 1996) 48
11.11. RADON IN AIR (OCT 1996) 48
11.12. RADON IN WATER (SEP 1991) 49
11.13. HAZARDOUS MATERIALS (OCT 1996) 49
11.14. RECYCLING (OCT 1996) 49

12. 0 ATTACHMENTS 50
12.1. ATTACHMENT No. 1 50
12.2. ATTACHMENT No. 2 51
12.3. ATTACHMENT No. 3 52
12.4. ATTACHMENT No. 4 53
12.5. ATTACHMENT No. 5 54
12.6. ATTACHMENT No. 6 55
12.7. ATTACHMENT No. 7 56
12.8. ATTACHMENT No. 8 57
12.9. ATTACHMENT No. 9 58

13. 0 REVISIONS (July 25, 2000) to this SFO 59

INITIALS: _____ & _____
LESSOR GOV'T

1.0 SUMMARY

1.1. AMOUNT AND TYPE OF SPACE (JAN 1997)

(a) The General Services Administration (GSA) is interested in leasing approximately 3,517 Rentable square feet of space. The Rentable space must yield a minimum of 2,780 BOMA Usable Square Feet (as defined elsewhere in this solicitation) to a maximum of 3,058 BOMA Usable Square Feet, available for use by Tenant for personnel, furnishings, and equipment.

(b) Offers must be for space located in a quality building of sound and substantial construction as described in this solicitation for offers, and have a potential for efficient layout. For purposes of this solicitation, the definition of BOMA Usable Square Feet is in the paragraph entitled "BOMA Usable Square Feet" in the Miscellaneous section of this solicitation. Space must be contiguous. Space should be no more than twice as long as it is wide, should be on one level, and should have open areas where columns and other obstructions do not hinder the development of efficient space layouts, the use of modular furniture and office work flow.

(c) To demonstrate potential for efficient layout, offerors may be requested to provide test fit layouts when the space offered contains certain features like:

- narrow column spacing
- atriums, light wells or other areas interrupting contiguous spaces
- extremely long, narrow runs of space
- irregular space configurations, or
- other unusual building features.

The Government will advise the offeror if the test fit layout demonstrates that the Government's requirement cannot be accommodated within the space offered. The offeror will have the option of increasing the BOMA Usable square footage offered provided that it does not exceed the maximum BOMA Usable square footage in the solicitation. If the offeror is already providing the maximum BOMA Usable square footage and cannot house the Government's space requirements, then the Government will advise the offeror that the offer is unacceptable.

(d) Unless otherwise noted, all references in this solicitation to square feet shall mean BOMA Usable Square Feet.

(e) The approximate breakdown of the total square footage required is as follows:

Open Area	1385 - 1663
Reception Area	180
Multi-Purpose Room	160
ADP Room	200
Private Offices (2)	255
Private Restrooms	300
Storage Room	150
Video Teleconference Room	150

1.2. PARKING/TRANSPORTATION

Adequate public transportation is required to the proposed location in those cities or towns that have a public transportation system.

Vehicle parking facilities, to accommodate 11 parking spaces, must be available with 2-hour minimum meters or otherwise unrestricted parking for visitors and employees within two blocks of the office. Such parking must be usable during normal working hours. Parking space which is routinely occupied by mid-morning would not be acceptable for visitor use.

Parking for the handicapped must be located within the same block of the building and must comply with the "Parking and Loading Zones" paragraph in the HANDICAPPED ACCESSIBILITY section of this Solicitation. The location of the parking for the handicapped must also be positioned as to not mandate the disabled from crossing any streets.

1.3. AREA OF CONSIDERATION

The space offered must be within Cadillac, Michigan city limits, and serviced by city water and sewer.

1.4. LOCATION: INSIDE OR OUTSIDE CITY CENTER (JAN 1997)

(a) CITY CENTER NEIGHBORHOOD:

Space must be located in a prime commercial office district with attractive, prestigious, professional surroundings with a prevalence of modern design and/or tasteful rehabilitation in modern use. Streets and public sidewalks should be well maintained.

(1) PARKING AND TRANSPORTATION

The parking to square foot ratio available on-site must at least meet current local code requirements or in the absence of a local code requirement, on-site parking must be available at a ratio of 1 space for every 300 rentable square feet of Government leased space.

(2) LOCATION AMENITIES:
A variety of inexpensive and moderately priced fast food and/or eat-in restaurants must be located within one mile and other employee services such as retail shops, cleaners, banks, etc., should be located within one mile.

(b) OUTSIDE OF CITY CENTER NEIGHBORHOOD:
Space must be located in an office, research, technology, or business park that is modern in design with a campus-like atmosphere, or on an attractively landscaped site containing one or more modern office buildings that are professional and prestigious in appearance with surrounding development well-maintained and in consonance with a professional image.

(1) PARKING AND TRANSPORTATION
The parking to square foot ratio available on-site must at least meet current local code requirements or in the absence of a local code requirement, on-site parking must be available at a ratio of 1 space for every 300 rentable square feet of Government leased space.

(2) LOCATION AMENITIES:
Adequate eating facilities are to be located within one mile and other employee services, such as retail shops, cleaners, banks, etc. should be located within one mile.

1.5. LEASE TERM
The lease term is for 10 years firm. No renewal options are required.

1.6. OFFER DUE DATE
The Contracting Officer will notify you concerning the due date of your offer.

1.7. OCCUPANCY DATE
Occupancy is required within 180 calendar days from the date of award or from receipt of plans and samples, whichever is later. GSA shall deliver layout drawings and necessary finish selection to the successful Offeror within 100 days after the date of award.

1.8. HOW TO OFFER (JAN 1997)
(a) Offers are to be submitted to the Contracting Officer at:
General Services Administration
Client Service Team- 5PEC
230 South Dearborn
Room 3622
Chicago, Illinois 60604
ATTN: Jerry Kosman

(b) No later than the close of business on the offer due date the following documents, properly executed, must be submitted:

(1) GSA Form 1364, Proposal to Lease Space (enclosed) or similar form.

(2) GSA Form 1217, Lessor's Annual Cost Statement (enclosed).

(3) Representations and Certifications (enclosed).

(4) *One-eighth inch (preferred) or larger scale first generation blue line plans of the space offered.*

(i) Photostatic copies are not acceptable. All architectural features of the space must be accurately shown. If conversion or renovation of the building is planned, alterations to meet this solicitation must be indicated. If requested, more informative plans must be provided within 15 days.

(ii) Plans shall reflect corridors in place or the proposed corridor pattern for both a typical full (single tenant) floor and/or partial (multi-tenant) floor. The corridors in place or proposed corridors should meet local code requirements for issuance of occupancy permits.

(iii) GSA will review the corridors in place and/or proposed corridor pattern to make sure that these achieve an acceptable level of safety as well as to ensure that these corridors provide public access to all essential building elements. The offeror will be advised of any adjustments that are required to the corridors for the purpose of determining the BOMA Usable space. The required corridors may or may not be defined by ceiling high partitions. Actual corridors in the approved layout for the successful offeror's space may differ from the corridors used in determining the BOMA Usable square footage for the lease award.

(5) A list of unit costs for adjustments (see paragraph entitled "Alterations Costing $100,000 or Less").

(6) An hourly overtime rate for overtime use of heating and cooling (see paragraph entitled "Overtime Usage").

(7) The estimated cost to prepare the space for occupancy by the Government.

(8) The offeror's proposed amortization rate for tenant alterations.

(c) The Offeror should also include as part of the offer, information which addresses any award factors which are listed in the solicitation paragraph entitled "Other Factors."

(d) Any items requested in the cover letter which accompanies this solicitation are required as part of this solicitation.

(e) See Solicitation Provisions for instructions. If additional information is needed, the Contracting Officer should be contacted.

(f) There will be no public opening of offers and all offers will be confidential until the lease has been awarded; however, the Government may release proposals outside the Government to a Government support contractor to assist in the evaluation of offers. Such Government contractors shall be required to protect the data from unauthorized disclosure. Offerors who desire to maximize protection of information in their offers may apply the restriction notice to their offers as prescribed in the provision entitled "52.215-12, Restriction on Disclosure and Use of Data."

1.9. PLANS WITH OFFER (JAN 1997)

All plans submitted for consideration must be Computer-Aided Design (CAD) files in the AutoCAD Release 12 (or later) .dwg format. Clean and purged files are to be submitted on 3½ inch high density diskettes, or, if approved by the Contracting Officer, on CD-ROM or QIC (¼ inch Cartridge) tape. All submissions must be accompanied with a written matrix indicating the layering standard used to ensure ll information is recoverable. Plans shall include a proposed corridor pattern for typical floors and/or partial floors. All architectural features of the space must be accurately shown.

1.10. NEGOTIATIONS (JAN 1997)

(a) The Government reserves the right to award a lease pursuant to this solicitation based on initial offers. If no such award is made, negotiations will be conducted on behalf of the Government by the GSA Contracting Officer or other authorized representative. The GSA Contracting Officer is named on the cover of this solicitation. GSA will negotiate rental price for the initial term, any renewal periods, and any other aspect of the offer as deemed necessary.

(b) The Offeror shall not enter into negotiations concerning the space leased or to be leased with representatives of Federal agencies other than the Contracting Officer or designee.

(c) The Contracting Officer will conduct oral or written negotiations with all Offerors that are within the competitive range. The competitive range will be established by the Contracting Officer on the basis of cost or price and other factors (if any) that are stated in this solicitation and will include all offers that have a reasonable chance of being selected for award.

(d) Offerors will be provided a reasonable opportunity to submit any cost or price, technical, or other revisions to their offers that may result from the negotiations. Negotiations will be closed with submission of "Best and Final" offers.

1.11. PRICE EVALUATION (PRESENT VALUE) (JAN 1997)

(a) If annual CPI adjustments in operating expenses are included, Offerors are required to submit their offers with the total "gross" annual price per rentable square foot and a breakout of the "base" price per rentable square foot for services and utilities (operating expenses) to be provided by the Lessor. The "gross" price shall include the "base" price.

(b) Offerors are required to submit plans and any other information to demonstrate that the rentable space yields BOMA Usable space within the required BOMA Usable range. The Government will verify the amount of BOMA Usable square footage and convert the rentable prices offered to BOMA Usable prices, which will subsequently be used in the price evaluation.

(c) If the offer includes annual adjustments in operating expenses, the base price per BOMA Usable square foot from which adjustments are made will be the base price for the term of the lease, including any option periods.

(d) Evaluation of offers will be on the basis of the annual price per BOMA Usable square foot, including any option periods. The Government will perform present value price evaluation by reducing the prices per BOMA Usable square foot to a composite annual BOMA Usable square foot price, as follows:

(1) Parking and wareyard areas will be excluded from the total square footage, but not from the price. For different types of space, the gross annual per square foot price will be determined by dividing the total annual rental by the total square footage minus these areas.

(2) If annual adjustments in operating expenses will not be made, the gross annual per square foot price will be discounted annually at 8 percent to yield a gross present value cost (PVC) per square foot.

(3) If annual adjustments in operating expenses will be made, the annual per square foot price, minus the base cost of operating expenses, will be discounted annually at 8 percent to yield a net PVC per square foot. The operating expenses will be both escalated at 4 percent compounded annually and discounted annually at 8 percent, then added to the net PVC to yield the gross PVC.

(4) To the gross PVC will be added:

- The cost of Government provided services and applicable service charges not included in the rental escalated at 4 percent compounded annually and discounted annually at 8 percent.

- The annualized (over the full term) per BOMA Usable square foot cost of any items which are to be reimbursed in a lump sum payment. (The cost of these items is present value; therefore, it will not be discounted.)

(5) The sum of either (2) and (4) or (3) and (4), above, will be the per BOMA Usable square foot present value of the offer for price evaluation purposes.

1.12. HISTORIC PREFERENCE, GSAR 552.270-4 (JUN 1994) (VARIATION)

(a) Preference will be given to Offerors of space in buildings in, or formally listed as eligible for inclusion in the National Register of Historic Places, and to historically significant buildings in historic districts listed in the National Register. Such preference will be extended to historic buildings and will result in award if:

(1) The offer for space meets the terms and conditions of this solicitation as well as any other offer received. (It is within the discretion of the Contracting Officer to accept alternatives to certain architectural characteristics and safety features defined elsewhere in this solicitation to maintain the historical integrity of the building, such as high ceiling, wooden floors, etc.) and

(2) The rental is no more than 10 percent higher, on a total annual square foot (BOMA Usable) cost to the Government, than the lowest otherwise acceptable offer.

(b) If more than one offer of an historic building is received and they meet the above criteria, an award will then be made to the lowest priced historic property offered.

1.13. AWARD (JAN 1997)

(a) After conclusion of negotiations, the Contracting Officer will require the Offeror selected for award to execute the proposed lease prepared by GSA which reflects the proposed agreement of the parties.

(b) The proposed lease shall consist of:

(1) Standard Form 2 (or GSA Form 3626) U.S. Government Lease for Real Property,

(2) required clauses,

(3) required certifications and representations,

(4) the pertinent provisions of the offer,

(5) the radon prevention exhibit, Exhibit 9

(6) the pertinent provisions of the SFO, and

(7) prevailing wage rates (applicable only when new construction is offered and where the Government will be the sole or predominant tenant.

(c) The acceptance of the offer and award of the lease by the Government occurs upon notification of unconditional acceptance of the offer or execution of the lease by the GSA Contracting Officer and mailing or otherwise furnishing written notification of the executed lease to the successful Offeror.

1.14. ACCESSIBILITY FOR NEW CONSTRUCTION (JAN 1997)

To be considered for award, buildings to be constructed must fully meet the new construction requirements of the Americans With Disabilities Act Accessibility Guidelines (ADAAG) (36 CFR Part 36, App. A) and the Uniform Federal Accessibility Standards (UFAS) (Federal Register vol. 49, No. 153, August 7, 1984, reissued as FED. STD. 795, dated April 1, 1988, and amended by Federal Property Management Regulations Amendment D-88, 54 FR 12627, March 28, 1989). Where standards conflict, the more stringent shall apply.

1.15. SEISMIC SAFETY FOR NEW CONSTRUCTION (JAN 1997)

(a) If an Offeror proposes to satisfy the requirements of this solicitation through the construction of a new building or the construction of an addition to an existing building, then such new building or addition shall fully meet seismic safety standards, as described below.

(b) For those buildings or additions to buildings described in (a) above, the Offeror shall provide a written certification from a licensed structural engineer that the building(s) conforms to the seismic standards for new construction of the current (as of the date of this solicitation) edition of the ICBO Uniform Building Code, the BOCA National Building Code, or the SBCCI Standard Building Code.

(c) All design and engineering documents, including structural engineering calculations, must be made available for review by the Government during design development to ensure compliance with seismic safety standards.

1.16. LABOR STANDARDS (JAN 1997)

If an offeror proposes to satisfy the requirements of this Solicitation for Offers through the construction of a new building or the complete rehabilitation or reconstruction of an existing building, and the Government will be the sole or predominant tenant such that any other use of the building will be functionally or quantitatively incidental to the Government's use and occupancy, the following Federal Acquisition Regulation clauses shall apply to work performed in preparation for occupancy and use of the building by the United States:

52.222-4 Contract Work Hours and Safety Standards Act - Overtime Compensation

52.222-6 Davis-Bacon Act

52.222-7 Withholding of Funds

52.222-8 Payrolls and Basic Records

52.222-9 Apprentices and Trainees

52.222-10 Compliance with Copeland Act Requirements

52.222-11 Subcontracts (Labor Standards)

52.222-12 Contract Termination-Debarment

52.222-13 Compliance with Davis-Bacon and Related Act Regulations

52.222-14 Disputes Concerning Labor Standards

52.222-15 Certification of Eligibility

1.17. LOCATION IN THE BUILDING

Space must be ground floor or above.

2.0 AWARD FACTORS

2.1. ACCESSIBILITY (JAN 1997)

(a) All offers received in response to this solicitation will be evaluated to determine whether the offers fully meet the accessibility requirements for new construction of the Americans With Disabilities Act Accessibility Guidelines (ADAAG) (36 CFR Part 36, App. A) and the Uniform Federal Accessibility Standards (UFAS) (Federal Register vol. 49, No. 153, August 7, 1984, reissued as FED. STD. 795, dated April 1, 1988, and amended by Federal Property Management Regulations Amendment D-88, 54 FR 12627, March 28, 1989). If any offers are received which fully meet accessibility requirements of new construction, then other offers which do not fully meet these requirements will not be considered. Where standards conflict, the more stringent shall apply.

(b) FULL COMPLIANCE:
"Fully meets" as used herein means the offer fully complies with the ADAAG and/or UFAS requirements for Parking and Loading Zones, Accessible Route, Entrance and Egress, Ramps, Stairs, Handrails, Doors, Elevators, Telephones, Controls, Signage, Alarms, Drinking Fountains, Storage Facilities, Seating and Work Stations, Assembly Areas, and Toilet Rooms.

(c) SUBSTANTIAL COMPLIANCE:
In accordance with ADAAG and UFAS, if no offer is received which fully meets accessibility requirements for new construction, but an offer(s) is received which substantially meets these requirements, then other offers which do not substantially meet these requirements will not be considered. "Substantially meets" as used herein with respect to the accessibility requirements means the offer fully complies with the ADAAG and UFAS requirements for Automobile Parking and Loading Zones, Accessible Route, Entrance and Egress, Doors, Drinking Fountains, Toilet Rooms and the space has at least one elevator where necessary for route.

(d) LESS THAN SUBSTANTIAL COMPLIANCE:
In accordance with ADAAG and UFAS, if no offer is received which either fully or substantially meets the accessibility requirements of new construction, consideration will be given only to offers which meet the following minimum requirements:

(1) At least one accessible route shall be provided from an accessible entrance to the leased space and all required accessible areas. At least one interior means of vertical access shall be provided. Elevators shall have complying Controls and Signage.

(2) If parking is provided, then accessible spaces shall be included.

(3) Accessible toilet rooms shall be provided as follows:

(i) Where more than one toilet room for each sex is provided on a floor on which the Government leases space, at least one toilet room for each sex on that floor shall be accessible.

(ii) *Where only one toilet room for each sex is provided on a floor on* which the Government leases space, either one unisex toilet room or one toilet room for each sex on that floor shall be accessible.

(iii) Where only one toilet room is provided in a building where the Government leases space, one unisex toilet room shall be accessible.

(iv) In a qualified historic building where the Advisory Council on Historic Preservation determines that providing the above minimum accessible toilet facilities would threaten or destroy the historic integrity of the space, unisex toilet room(s) in the building shall be accessible.

(e) If no offer is received which meets the minimum accessibility requirements described above, offers will not be considered unless a waiver of accessibility requirements is requested by the Contracting Officer and granted by the GSA Public Buildings Service Commissioner.

2.2. ACCESSIBILITY AND SEISMIC SAFETY (JAN 1997)

(a) All offers received in response to this solicitation will be evaluated to determine whether the offers fully meet one of the Model Building Seismic Design Provisions shown below *and the accessibility requirements for new construction of the Americans* With Disabilities Act Accessibility Guidelines (ADAAG) (36 CFR Part 36, App. A) and the Uniform Federal Accessibility Standards (UFAS) (Federal Register vol. 49, No. 153, August 7, 1984, reissued as FED. STD. 795, dated April 1, 1988, and amended by Federal Property Management Regulations Amendment D-88, 54 FR 12627, March 28, 1989). Where standards conflict, the more stringent shall apply. If any offers are received which fully meet accessibility and seismic safety requirements, then other offers which do not fully meet these requirements will not be considered.

(b) FULL COMPLIANCE:

(1) "Fully meets" as used herein with respect to accessibility means the offer fully complies with the ADAAG and UFAS requirements for Parking (Automobile and Van) and Loading Zones, Accessible Route, Entrance and Egress, Ramps, Stairs, Handrails, Doors, Elevators, Telephones, Controls, Signage, Alarms, Drinking Fountains, Storage Facilities, Seating and Work Stations, Assembly Areas, and Toilet Rooms. Where standards conflict, the more stringent shall apply.

(2) "Fully meets" with regard to seismic safety, means that the building design and construction are in compliance with the seismic requirements of one of the following Model Building Code Seismic Design Provisions as applicable in the geographical area. *Compliance shall be established by a registered structural engineer's evaluation.*

	Model Building Code Seismic Design Provisions		
BUILDING TYPE	BOCA	SBCCI	UBC
Wood Frame, Wood Shear Panels	*	*	1949
Steel Moment Resisting Frame	1987	1991	1976
Steel Braced Frame	1990	1991	1988
Steel Frame w/Concrete Shear Walls	1987	1991	1976
Reinforced Concrete Moment Resisting Frame	1987	1991	1976
Reinforced Concrete Shear Walls	1987	1991	1976
Tilt-up Concrete	1987	1991	1973
Reinforced Masonry	1987	1991	1976

*Local provisions for wood construction need to be compared to the 1949 UBC to determine benchmark year.
For additional building types, see NISTIR 5382.

(c) SUBSTANTIAL COMPLIANCE

(1) In accordance with ADAAG and UFAS, if no offer is received which fully meets accessibility requirements for new construction, but an offer(s) is received which substantially meets these requirements, then other offers which do not substantially meet these requirements will not be considered. "Substantially meets" as used herein with respect to the accessibility requirements means the offer fully complies with the ADAAG and UFAS requirements for Automobile Parking and Loading Zones, Accessible Route, Entrance and Egress, Doors, Drinking Fountains, Toilet Rooms and the space has at least one elevator where necessary for route.

(2) "Substantially meets" with regard to seismic safety will be determined by the Government based upon the Offeror's evaluation by a registered structural engineer that specifically describes all exceptions to full compliance with the Model Building Code Seismic Design Provisions above. The offeror is to evaluate using NISTIR 5382 and identify all deficiencies. Based upon the evaluation, the Contracting Officer will make an award to the offer which best meets the Model Building Code Seismic Design Provisions and the other requirements of this solicitation.

(d) LESS THAN SUBSTANTIAL COMPLIANCE: *In accordance with ADAAG and UFAS, if no offer is received which either fully or* substantially meets the accessibility requirements of new construction, consideration will be given only to offers which meet the following minimum requirements:

(1) At least one accessible route shall be provided from an accessible entrance to the leased space and all required accessible areas. At least one interior means of vertical access shall be provided. Elevators shall have complying Controls and Signage.

(2) If parking is provided, then accessible spaces shall be included.

(3) Accessible toilet rooms shall be provided as follows:

(i) Where more than one toilet room for each sex is provided on a floor on which the Government leases space, at least one toilet room for each sex on that floor shall be accessible.

(ii) Where only one toilet room for each sex is provided on a floor on which the Government leases space, either one unisex toilet room or one toilet room for each sex on that floor shall be accessible.

(iii) Where only one toilet room is provided in a building where the Government leases space, one unisex toilet room shall be accessible.

(iv) In a qualified historic building where the Advisory Council on Historic Preservation determines that providing the above minimum accessible toilet facilities would threaten or destroy the historic integrity of the space, unisex toilet room(s) in the building shall be accessible.

(e) If no offer is received which meets the minimum accessibility requirements described above, offers will not be considered unless a waiver of accessibility requirements is requested by the Contracting Officer and granted by the GSA Public Buildings Service Commissioner.

2.3. AWARD BASED ON PRICE (DEC1996)

The lease will be awarded to the responsible Offeror whose offer conforms to the requirements of this solicitation and is the lowest priced offer submitted (see the SFO paragraph entitled "Price Evaluation (Present Value)").

3.0 MISCELLANEOUS

3.1. UNIT COSTS FOR ADJUSTMENTS

Several paragraphs in this SFO specify means for determining quantities of materials. These are Government projections to assist the Offeror in cost estimating. Actual quantities may not be determined until after the lease is awarded and the space layout completed. To enable an equitable settlement if the Government layout departs from the projection, the Offeror must list a unit cost for each of these materials. GSA will use each unit cost to make a lump sum payment or rental increase if the amount of material required by the layout is more than specified or take credit from rental if the amount is less than specified. Offerors are required to state in the offer or in an attachment:

Floor Duplex electrical outlet

Wall Duplex electrical outlet

Floor Quadruplex electrical

Wall Quadruplex electrical

Dedicated Clean Duplex

Dedicated Clean Fourplex

Dedicated clean electrical computer receptacle

Floor Telephone

Wall Telephone

Floor mounted data outlet

Wall mounted data outlet

Power Feeds to modular furniture

GFI outlet

IG outlet

Wall Dedicated outlets

Floor Dedicated outlets

Partition ceiling high sanded and taped (per lf)

Partition ceiling high sanded, taped and Wallpapered (per lf)

Slab-to-slab partitions (per lf)

Doors (each)

Half Wall Partitions taped and sanded (per lf)

Half Wall, Wallpapered Partitions (per if)

3.2. ALTERATIONS $100,000 OR LESS (JAN 1997)

(a) The unit prices which the Offeror is required to list will be used, upon acceptance by GSA, during the first year of the lease to price alterations costing $100,000 or less. These prices may be indexed or renegotiated to apply to subsequent years of the lease upon mutual agreement of the Lessor and Government.

(b) Where unit prices for alterations are not available, the Lessor may be requested to provide a price proposal for the alterations. Orders will be placed by issuance of a GSA Form 276, Supplemental Lease Agreement, a GSA Form 300, Order for Supplies or Services, or a tenant agency approved form. The clauses entitled "GSAR 552.232-71 Prompt Payment" and "GSAR 552.232-72 Invoice Requirements (Variation)" apply to orders for alterations. All orders are subject to the terms and conditions of this lease.

(c) Orders may be placed by the Contracting Officer, the GSA buildings manager or tenant agency officials when specifically authorized to do so by the Contracting Officer. The Contracting Officer will provide the Lessor with a list of agency officials authorized to place orders and will specify any limitations on the authority delegated to tenant agency officials. The tenant agency officials are not authorized to deal with the Lessor on any other matters.

(d) Payments for alterations ordered by tenant agencies will be made directly by the agency placing the order.

3.3. ALTERNATE PROPOSALS

This solicitation may specify certain items for which alternate proposals are required. For evaluation and negotiation, the offer shall state:

- Itemized costs for lump sum payment not to be included in the rental rate, and
- A rental rate which includes the costs of these items.

The Offeror must provide costs for both methods of evaluation on the lease proposal form in order to be considered for award. GSA may elect the option it deems most favorable.

3.4. TAX ADJUSTMENT, GSAR 552.270-24 (AUG 1992)

(a) Real estate taxes, as referred to in this clause, are only those taxes which are assessed against the building and/or the land upon which the building is located, without regard to benefit to the property, for the purpose of funding general government services. Real estate taxes shall not include, without limitation, general and/or special assessments, business improvement district assessments, or any other present or future taxes or governmental charges that are imposed upon Lessor or assessed against the Building and/or the land upon which the building is located.

(b) Base year taxes as referred to in this clause are the real estate taxes for the first twelve (12) month period coincident with full assessment, or may be an amount negotiated by the parties that reflects an agreed upon base for a fully assessed value of the property.

(c) The term "full assessment" as referred to in this clause means that the taxing jurisdiction has considered all contemplated improvements to the assessed property in the valuation of the same. Partial assessments for newly constructed projects or for projects under construction, conversion, or renovation will not be used for establishing the Government's base year for taxes.

(d) The Lessor shall furnish the Contracting Officer with copies of all notices which may affect the valuation of said land and buildings for real estate taxes thereon, as well as all notices of a tax credit, all tax bills and all paid tax receipts, or where tax receipts are not given, other similar evidence of payment acceptable to the Contracting Officer (hereinafter, evidence of payment), and a proper invoice (as described in the Prompt Payment clause of this lease, GSAR 552.232-71) of the tax adjustment including the calculation thereof, for each year that real estate taxes are incurred during the lease term or any extension thereof. All such documents are due within ten (10) calendar days of receipt except that the proper invoice and evidence of payment shall be submitted within sixty (60) calendar days after the date the tax payment is due from the Lessor to the taxing authority. **Failure to submit the proper invoice and evidence of payment within such time frame shall be a waiver of the right to receive payment resulting from an increased tax adjustment under this clause.**

(e) The Government shall make a single annual lump sum payment to the Lessor for its share of any increase in real estate taxes during the lease term over the amount established as the base year taxes, or receive a rental credit or lump sum payment for its share of any decreases in real estate taxes during the lease term below the amount established as the base year taxes. The amount of lump sum payment or rental credit shall be based upon evidence of valuation and payment submitted by the Lessor to the Contracting Officer in accordance with paragraph (d).

(i) In the event of an increase in taxes over the base year, the Lessor shall submit a proper invoice of the tax adjustment including the calculation thereof together with evidence of payment to the Contracting Officer. **The Government shall be responsible for payment of any tax increase over the base year taxes only if the proper invoice and evidence of payment is submitted by the Lessor within sixty (60) calendar days after the date the tax payment is due from the**

Lessor to the taxing authority. The due date for making payment shall be the thirtieth (30th) calendar day after receipt of evidence of payment by the Contracting Officer or the thirtieth (30th) calendar day after the anniversary date of the lease, whichever is later. If the lease terminates before the end of a tax year, payment for the tax increase due as a result of this section for the tax year will be prorated based on the number of days the Government occupied the space. No increase will be paid, due, or owing unless all evidence of valuation and payment have been previously submitted to the Contracting Officer. The Government's payment for its share of real estate taxes shall not include any late charges, interest, or penalties imposed by the taxing authority as a result of the Lessor's delinquency in paying such taxes or charges.

(ii) In the event of a decrease in taxes from the base year, or in the event of any refund or tax deduction, the Lessor shall notify the Contracting Officer in accordance with paragraph (d) of this clause. The Government shall be entitled to and shall receive a credit for the prorata reduction in taxes applicable to the Premises encumbered by this lease, regardless of whether the Government has made a tax payment for that year. The Government's share of the credit will be determined in accordance with paragraph (f) of this clause and shall be taken as a deduction from the rent. Any credit due the Government after the expiration or earlier termination of the Lease (including but not limited to credits resulting from a decrease in taxes pursuant to a tax credit due the Lessor; a reduction in the tax assessment; or a tax appeal proceeding for a year of the Lease, or portion thereof) shall be made by a lump sum payment to the Government or as a rental credit to any succeeding lease as determined by the Contracting Officer. The Lessor shall remit any lump sum payment to the Government within fifteen (15) calendar days of payment by the taxing authority to the Lessor or the Lessor's designee. If the credit due to the Government is not paid by the due date, interest shall accrue on the late payment at the rate established by the Secretary of the Treasury under Section 12 of the Contract disputes Act of 1978 (41 U.S.C. 611) that is in effect on the day after the due date. The interest penalty shall accrue daily on the amount of the credit and be compounded in thirty (30) day increments inclusive from the first day after the due date through the payment date. The Government shall have the right to pursue the outstanding balance of any tax credit using all such collection methods as are available to the United States to collect debts. Such collection rights shall survive the expiration of this lease.

(f) The Government shall pay its share of tax increases or receive its share of any tax decrease based on the ratio of the rentable square feet occupied by the Government to the total rentable square feet in the building or complex (percentage of occupancy). For the purpose of this lease, the Government's percentage of occupancy shall be set forth in the offer on form 1364. This percentage shall be subject to adjustment to take into account additions or reductions of the amount of space as may be contemplated in this lease or amendments hereto. The block and lot/parcel or other identification numbers for the property, building(s) and parking areas(s) occupied under this lease shall be set forth on form 1364.

(g) The Government may direct the Lessor upon reasonable notice to initiate a tax appeal or the Government may decide to contest the tax assessment on behalf of the Government and the Lessor or for the Government alone. The Lessor shall furnish to the Government information necessary for appeal of the tax assessment in accordance with the filing requirements of the taxing authority. If the Government decides to contest the tax assessment on its own behalf or on behalf of the Government and the Lessor, the Lessor shall cooperate and use all reasonable efforts including but not limited to affirming the accuracy of the documents, executing documents required for any legal proceeding and taking such other actions as may be required. If the Lessor initiates an appeal on behalf of the Government, the Government and the Lessor will enter into an agreement to establish a method for sharing expenses and tax savings.

3.5. PERCENTAGE OF OCCUPANCY

The percent of the building occupied by the Government, for purposes of tax adjustments, will be established during negotiations.

3.6. OPERATING COSTS GSAR 552.270-23 (JUN 1985)

A. Beginning with the second year of the lease and each year after, the Government shall pay adjusted rent for changes in costs for cleaning services, supplies, materials, maintenance, trash removal, landscaping, water, sewer charges, heating, electricity and certain administrative expenses attributable to occupancy. Applicable costs listed on GSA Form 1217, Lessor's Annual Cost Statement, when negotiated and agreed upon, will be used to determine the base rate for operating costs adjustment.

B. The amount of adjustment will be determined by multiplying the base rate by the percent of change in the cost of living index. The percent change will be computed by comparing the index figure published for the month prior to the lease commencement date with the index figure published for the month which begins each successive 12-month period. For example, a lease which commences in June of 1985 would use the index published for May of 1985 and that figure would be compared with the index published for May of 1986, May of 1987, and so on, to determine the percent change. The cost of living index will be measured by the U.S. Department of Labor revised consumer price index for wage earners and clerical workers, U.S. city average, all items figure, (1982-84 = 100) published by the Bureau of Labor Statistics. Payment will be made with the monthly installment of fixed rent. Rental adjustments will be effective on the anniversary date of the lease. Payment of the adjusted rental rate will become due on the first workday of the second month following the publication of the cost of living index for the month prior to the lease commencement date.

C. If the Government exercises and option to extend the lease term at the same rate as that of the original term, the option price will be based on the adjustment during the original term. Annual adjustments will continue.

D. In the event of any decreases in the cost of living index occurring during the term of the occupancy under the lease, the rental amount will be reduced accordingly. The amount of such reduction will be determined in the same manner as increases in rent provided under this clause.

E. The offer must clearly state whether the rental is firm throughout the term of the lease or if it is subject to annual adjustment of operating costs as indicated above. If operating costs will be subject to adjustment, it should be specified on block 19 of GSA Form 1364, Proposal to Lease Space, contained elsewhere in this Solicitation.

3.7. OPERATING COSTS BASE (JAN 1997)

The base for the operating costs adjustment will be established during negotiations based upon BOMA Usable Square Feet.

3.8. RENTABLE SPACE (JUN 1994)

Rentable space is the area for which a tenant is charged rent. It is determined by the building owner and may vary by city or by building within the same city. The rentable space may include a share of building support/common areas such as elevator lobbies, building corridors, and floor service areas. Floor service areas typically include restrooms, janitor rooms, telephone closets, electrical closets, and mechanical rooms. The rentable space generally does not include vertical building penetrations and their enclosing walls, such as stairs, elevator shafts and vertical ducts.

3.9. BOMA USABLE SQUARE FEET (JAN 1997)

(a) For the purposes of this solicitation, the Government recognizes the BOMA (Building Owners and Managers Association) International standard (ANSI/BOMA Z65.1-1996) definition for Office Area, which means "the area where a tenant normally houses personnel and/or furniture, for which a measurement is to be computed."

(b) BOMA Usable Square Feet shall be computed by measuring the area enclosed by the finished surface of the room side of corridors (corridors in place as well as those required by local codes and ordinances to provide an acceptable level of safety and/or to provide access to essential building elements) and other permanent walls, the dominant portion (see Z65.1) of building exterior walls, and the center of tenant-separating partitions. Where alcoves, recessed entrances, or similar deviation from the corridor are present, BOMA Usable Square Feet shall be computed as if the deviation were not present.

(c) To keep all offers equal, the definition of BOMA usable is the same in a single tenant building as in a multi-tenant building. In a single tenant building the common areas are the visitors restrooms, the vestibule and the mechanical room(s). The common area measurement should not be included in the Usable Measurement. If you have any questions regarding this matter, bring it to the attention of the contracting officer.

3.10. COMMON AREA FACTOR (JAN 1997)

If applicable, Offerors shall provide the Common Area Factor (a conversion factor(s) determined by the building owner and applied by the owner to the BOMA Usable Square Feet to determine the rentable square feet for the offered space).

3.11. APPURTENANT AREAS

The right to use appurtenant areas and facilities is included. The Government reserves the right to post Government rules and regulations where the Government leases space.

3.12. LIQUIDATED DAMAGES, GSAR 552.270-22 (AUG 1992)

In case of failure on the part of the Lessor to complete the work within the time fixed in the lease contract or letter of award, the Lessor shall pay the Government as fixed and agreed liquidated damages, pursuant to this clause, the sum that will be determined by the Government after damages are assessed by the Government.

3.13. ADJUSTMENT FOR VACANT PREMISES, GSAR 552.270-25 (JUN 1994) (VARIATION)

(a) If the Government fails to occupy any portion of the leased premises or vacates the premises in whole or in part prior to expiration of the term of the lease, the rental rate will be reduced.

(b) The rate will be reduced by that portion of the costs per BOMA Usable square foot of operating expenses not required to maintain the space. Said reduction must occur after the Government gives 30 calendar days prior notice to the Lessor, and must continue in effect until the Government occupies the premises or the lease expires or is terminated.

3.14. RELOCATION ASSISTANCE ACT

If an improved site is offered and new construction will result in the displacement of individuals or businesses, the successful Offeror shall be responsible for payment of relocation costs for displaced persons in accordance with the Uniform Relocation Assistance and Real Property Acquisition Policies Act of 1970, as amended, and 49 CFR Part 24.

3.15. EVIDENCE OF CAPABILITY TO PERFORM

(a) AT THE TIME OF SUBMISSION OF OFFERS, OFFERORS SHALL SUBMIT TO THE CONTRACTING OFFICER:

(1) *Satisfactory evidence of at least a conditional commitment of funds in an amount necessary to prepare the space.* Such commitments must be signed by an authorized bank officer and at a minimum must state: amount of loan; term in years; annual percentage rate; length of loan commitment.

(2) The name of the proposed construction contractor, as well as evidence of his experience, competency, and performance *capabilities with construction similar in scope to that which is required herein.*

(3) The license or certification of the individual(s) and/or firm(s), providing architectural and engineering design services, to practice in the state where the facility is located.

(4) *Compliance with local zoning laws or evidence of variances, if any, approved by the proper local authority.*

(5) Evidence of ownership or control of site.

(b) AFTER AWARD:
Within 30 days after award, the successful Offeror/Lessor shall provide to the Contracting Officer evidence of:

(1) A firm commitment of funds in an amount sufficient to perform the work.

(2) Award of a construction contract with a firm completion date.

(3) Issuance of a building permit covering construction of the improvements.

3.16. CONSTRUCTION SCHEDULE

(a) *Within 7 days after award of the lease contract, the successful Offeror shall submit to the Contracting Officer a tentative* construction schedule giving the dates on which the various phases of construction will be completed to coincide with the Government's required occupancy date (see paragraph entitled "Occupancy Date"). Adjustment to the construction schedule should be submitted immediately afterit has been revised.

(b) *The schedule is to include timing for completion of design and construction milestones, including* but not limited to, (1) submittal of preliminary plans and specifications, (2) submittal of other working drawings, (3) issuance of a building permit, (4) completed construction documents, (5) start of construction, (6) completion of principal categories of work, (7) phased completion, and availability for occupancy of each portion of the Government space (by floor, block, or other appropriate category), and (8) final construction completion.

3.17. PROGRESS REPORTS

After start of construction, the successful Offeror shall submit to the Contracting Officer, written progress reports at intervals of30 days. The report shall include information as to percentage of the work completed by phase and trade, a statement as to expected completion and occupancy date, changes introduced into the work, and general remarks on such items as material shortages, strikes, weather, etc.

3.18. CONSTRUCTION INSPECTIONS

(a) Construction inspections will be made periodically by the Contracting Officer and/or designated technical representatives to review compliance with the solicitation requirements and the final working drawings.

(b) Periodic reviews, tests, and inspections by the Government are not to be interpreted as resulting in any approval of the Lessor's apparent progress toward meeting the Government's objectives, but are intended to discover any information which the Contracting Officer may be able to call to the Lessor's attention to prevent costly misdirection of effort. The Lessor will remain completely *responsible for designing, constructing, operating, and maintaining the building in full accordance with the* requirements of this solicitation.

3.19. MISCELLANEOUS LABOR CLAUSES (AUG 1994)

1. 52.222-4 CONTRACT WORK HOURS AND SAFETY STANDARDS ACT—OVERTIME COMPENSATION (JUL 1995)

(a) *Overtime requirements.* No Contractor or subcontractor contracting for any part of the contract work which may require or involve the employment of laborers or mechanics (see Federal Acquisition Regulation (FAR) 22.300) shall require or permit any such laborers or mechanics in any workweek in which the individual is employed on such work to work in excess of 40 hours in such workweek unless such laborer or mechanic receives compensation at a rate not less than 1½ times the basic rate of pay for all hours worked in excess of 40 hours in such workweek.

(b) *Violation; liability for unpaid wages; liquidated damages.* In the event of any violation of the provisions set forth in paragraph (a) of this clause, the Contractor and any subcontractor responsible therefor shall be liable for the unpaid wages. In addition, such Contractor and subcontractor shall be liable to the United States (in the case of work done under contract for the District of Columbia or a territory, to such District or to such territory), for liquidated damages. Such liquidated damages

shall be computed with respect to each individual laborer or mechanic employed in violation of the provisions set forth in paragraph (a) of this clause in the sum of $10 for each calendar day on which such individual was required or permitted to work in excess of the standard workweek of 40 hours without payment of the overtime wages required by provisions set forth in paragraph (a) of this clause.

(c) *Withholding for unpaid wages and liquidated damages.* The Contracting Officer shall upon his or her own action or upon written request of an authorized representative of the Department of Labor withhold or cause to be withheld, from any moneys payable on account of work performed by the Contractor or subcontractor under any such contract or any other Federal contract with the same Prime Contractor, or any other Federally-assisted contract subject to the Contract Work Hours and Safety Standards Act which is held by the same Prime Contractor, such sums as may be determined to be necessary to satisfy any liabilities of such Contractor or subcontractor for unpaid wages and liquidated damages as provided in the provisions set forth in paragraph (b) of this clause.

(d) *Payrolls and basic records.*

(1) The Contractor or subcontractor shall maintain payrolls and basic payroll records during the course of contract work and shall preserve them for a period of 3 years from the completion of the contract for all laborers and mechanics working on the contract. Such records shall contain the name and address of each such employee, social security number, correct classifications, hourly rates of wages paid, daily and weekly number of hours worked, deductions made, and actual wages paid. Nothing in this paragraph shall require the duplication of records required to be maintained for construction work by Department of Labor regulations at 29 CFR 5.5(a)(3) implementing the Davis-Bacon Act.

(2) The records to be maintained under paragraph (d)(1) of this clause shall be made available by the Contractor or subcontractor for inspection, copying, or transcription by authorized representatives of the Contracting Officer or the Department of Labor. The Contractor or subcontractor shall permit such representatives to interview employees during working hours on the job.

(e) *Subcontracts.* The Contractor or subcontractor shall insert in any subcontracts exceeding $100,000 the provisions set forth in paragraphs (a) through (e) of this clause and also a clause requiring the subcontractors to include these provisions in any lower tier subcontracts. The Prime Contractor shall be responsible for compliance by any subcontractor or lower tier subcontractor with the provisions set forth in paragraphs (a) through (e) of this clause.

2. 52.222-6 DAVIS-BACON ACT (FEB 1995)

(a) All laborers and mechanics employed or working upon the site of the work will be paid unconditionally and not less often than once a week, and without subsequent deduction or rebate on any account (except such payroll deductions as are permitted by regulations issued by the Secretary of Labor under the Copeland Act (29 CFR Part 3)), the full amount of wages and bona fide fringe benefits (or cash equivalents thereof) due at time of payment computed at rates not less than those contained in the wage determination of the Secretary of Labor which is attached hereto and made a part hereof, regardless of any contractual relationship which may be alleged to exist between the Contractor and such laborers and mechanics. Contributions made or costs reasonably anticipated for bona fide fringe benefits under section 1(b)(2) of the Davis-Bacon Act on behalf of laborers or mechanics are considered wages paid to such laborers or mechanics, subject to the provisions of paragraph (d) of this clause; also, regular contributions made or costs incurred for more than a weekly period (but not less often than quarterly) under plans, funds, or programs which cover the particular weekly period, are deemed to be constructively made or incurred during such period. Such laborers and mechanics shall be paid not less than the appropriate wage rate and fringe benefits in the wage determination for the classification of work actually performed, without regard to skill, except as provided in the clause entitled Apprentices and Trainees. Laborers or mechanics performing work in more than one classification may be compensated at the rate specified for each classification for the time actually worked therein; provided, that the employer's payroll records accurately set forth the time spent in each classification in which work is performed. The wage determination (including any additional classifications and wage rates conformed under paragraph (b) of this clause) and the Davis-Bacon poster (WH-1321) shall be posted at all times by the Contractor and its subcontractors at the site of the work in a prominent and accessible place where it can be easily seen by the workers.

(b) (1) The Contracting Officer shall require that any class of laborers or mechanics which is not listed in the wage determination and which is to be employed under the contract shall be classified in conformance with the wage determination. The Contracting Officer shall approve an additional classification and wage rate and fringe benefits therefor only when all the following criteria have been met:

(i) The work to be performed by the classification requested is not performed by a classification in the wage determination.

(ii) The classification is utilized in the area by the construction industry.

(iii) The proposed wage rate, including any bona fide fringe benefits, bears a reasonable relationship to the wage rates contained in the wage determination.

(2) If the Contractor and the laborers and mechanics to be employed in the classification (if known), or their representatives, and the Contracting Officer agree on the classification and wage rate (including the amount designated for fringe benefits, where appropriate), a report of the action taken shall be sent by the Contracting Officer

to the Administrator of the Wage and Hour Division, Employment Standards Administration, U.S. Department of Labor, Washington, DC 20210. The Administrator or an authorized representative will approve, modify, or disapprove every additional classification action within 30 days of receipt and so advise the Contracting Officer or will notify the Contracting Officer within the 30-day period that additional time is necessary.

(3) In the event the Contractor, the laborers or mechanics to be employed in the classification, or their representatives, and the Contracting Officer do not agree on the proposed classification and wage rate (including the amount designated for fringe benefits, where appropriate), the Contracting Officer shall refer the questions, including the views of all interested parties and the recommendation of the Contracting Officer, to the Administrator of the Wage and Hour Division for determination. The Administrator, or an authorized representative, will issue a determination within 30 days of receipt and so advise the Contracting Officer or will notify the Contracting Officer within the 30-day period that additional time is necessary.

(4) The wage rate (including fringe benefits, where appropriate) determined pursuant to subparagraphs (b)(2) and (b)(3) of this clause shall be paid to all workers performing work in the classification under this contract from the first day on which work is performed in the classification.

(c) Whenever the minimum wage rate prescribed in the contract for a class of laborers or mechanics includes a fringe benefit which is not expressed as an hourly rate, the Contractor shall either pay the benefit as stated in the wage determination or shall pay another bona fide fringe benefit or an hourly cash equivalent thereof.

(d) If the Contractor does not make payments to a trustee or other third person, the Contractor may consider as part of the wages of any laborer or mechanic the amount of any costs reasonably anticipated in providing bona fide fringe benefits under a plan or program; provided, that the Secretary of Labor has found, upon the written request of the Contractor, that the applicable standards of the Davis-Bacon Act have been met. The Secretary of Labor may require the Contractor to set aside in a separate account assets for the meeting of obligations under the plan or program.

3. 52.222-7 WITHHOLDING OF FUNDS (FEB 1988)
The Contracting Officer shall, upon his or her own action or upon written request of an authorized representative of the Department of Labor, withhold or cause to be withheld from the Contractor under this contract or any other Federal contract with the same Prime Contractor, or any other Federally assisted contract subject to Davis-Bacon prevailing wage requirements, which is held by the same Prime Contractor, so much of the accrued payments or advances as may be considered necessary to pay laborers and mechanics, including apprentices, trainees, and helpers, employed by the Contractor or any subcontractor the full amount of wages required by the contract. In the event of failure to pay any laborer or mechanic, including any apprentice, trainee, or helper, employed or working on the site of the work, all or part of the wages required by the contract, the Contracting Officer may, after written notice to the Contractor, take such action as may be necessary to cause the suspension of any further payment, advance, or guarantee of funds until such violations have ceased.

4. 52.222-8 PAYROLLS AND BASIC RECORDS (FEB 1988)
(a) Payrolls and basic records relating thereto shall be maintained by the Contractor during the course of the work and preserved for a period of 3 years thereafter for all laborers and mechanics working at the site of the work. Such records shall contain the name, address, and social security number of each such worker, his or her correct classification, hourly rates of wages paid (including rates of contributions or costs anticipated for bona fide fringe benefits or cash equivalents thereof of the types described in section 1(b)(2)(B) of the Davis-Bacon Act), daily and weekly number of hours worked, deductions made, and actual wages paid. Whenever the Secretary of Labor has found, under paragraph (d) of the clause entitled Davis-Bacon Act, that the wages of any laborer or mechanic include the amount of any costs reasonably anticipated in providing benefits under a plan or program described in section 1(b)(2)(B) of the Davis-Bacon Act, the Contractor shall maintain records which show that the commitment to provide such benefits is enforceable, that the plan or program is financially responsible, and that the plan or program has been communicated in writing to the laborers or mechanics affected, and records which show the costs anticipated or the actual cost incurred in providing such benefits. Contractors employing apprentices or trainees under approved programs shall maintain written evidence of the registration of apprenticeship programs and certification of trainee programs, the registration of the apprentices and trainees, and the ratios and wage rates prescribed in the applicable programs.

(b) (1) The Contractor shall submit weekly for each week in which any contract work is performed a copy of all payrolls to the Contracting Officer. The payrolls submitted shall set out accurately and completely all of the information required to be maintained under paragraph (a) of this clause. This information may be submitted in any form desired. Optional Form WH-347 (Federal Stock Number 029-005-00014-1) is available for this purpose and may be purchased from the Superintendent of Documents, U.S. Government Printing Office, Washington, DC 20402. The Prime Contractor is responsible for the submission of copies of payrolls by all subcontractors.

(2) Each payroll submitted shall be accompanied by a "Statement of Compliance," signed by the Contractor or subcontractor or his or her agent who pays or supervises the payment of the persons employed under the contract and shall certify—

(i) That the payroll for the payroll period contains the information required to be maintained under paragraph (a) of this clause and that such information is correct and complete;

(ii) That each laborer or mechanic (including each helper, apprentice, and trainee) employed on the contract during the payroll period has been paid the full weekly wages earned, without rebate, either directly or indirectly, and that no deductions have been made either directly or indirectly from the full wages earned, other than permissible deductions as set forth in the Regulations, 29 CFR Part 3; and

(iii) That each laborer or mechanic has been paid not less than the applicable wage rates and fringe benefits or cash equivalents for the classification of work performed, as specified in the applicable wage determination incorporated into the contract.

(3) The weekly submission of a properly executed certification set forth on the reverse side of Optional Form WH-347 shall satisfy the requirement for submission of the "Statement of Compliance" required by subparagraph (b)(2) of this clause.

(4) The falsification of any of the certifications in this clause may subject the Contractor or subcontractor to civil or criminal prosecution under Section 1001 of Title 18 and Section 3729 of Title 31 of the United States Code.

(c) The Contractor or subcontractor shall make the records required under paragraph (a) of this clause available for inspection, copying, or transcription by the Contracting Officer or authorized representatives of the Contracting Officer or the Department of Labor. The Contractor or subcontractor shall permit the Contracting Officer or representatives of the Contracting Officer or the Department of Labor to interview employees during working hours on the job. If the Contractor or subcontractor fails to submit required records or to make them available, the Contracting Officer may, after written notice to the Contractor, take such action as may be necessary to cause the suspension of any further payment. Furthermore, failure to submit the required records upon request or to make such records available may be grounds for debarment action pursuant to 29 CFR 5.12.

5. 52.222-9 APPRENTICES AND TRAINEES (FEB 1988)

(a) *Apprentices.* Apprentices will be permitted to work at less than the predetermined rate for the work they performed when they are employed pursuant to and individually registered in a bona fide apprenticeship program registered with the U.S. Department of Labor, Employment and Training Administration, Bureau of Apprenticeship and Training, or with a State Apprenticeship Agency recognized by the Bureau, or if a person is employed in his or her first 90 days of probationary employment as an apprentice in such an apprenticeship program, who is not individually registered in the program, but who has been certified by the Bureau of Apprenticeship and Training or a State Apprenticeship Agency (where appropriate) to be eligible for probationary employment as an apprentice. The allowable ratio of apprentices to journeymen on the job site in any craft classification shall not be greater than the ratio permitted to the Contractor as to the entire work force under the registered program. Any worker listed on a payroll at an apprentice wage rate, who is not registered or otherwise employed as stated in this paragraph, shall be paid not less than the applicable wage determination for the classification of work actually performed. In addition, any apprentice performing work on the job site in excess of the ratio permitted under the registered program shall be paid not less than the applicable wage rate on the wage determination for the work actually performed. Where a contractor is performing construction on a project in a locality other than that in which its program is registered, the ratios and wage rates (expressed in percentages of the journeyman's hourly rate) specified in the Contractor's or subcontractor's registered program shall be observed. Every apprentice must be paid at not less than the rate specified in the registered program for the apprentice's level of progress, expressed as a percentage of the journeyman hourly rate specified in the applicable wage determination. Apprentices shall be paid fringe benefits in accordance with the provisions of the apprenticeship program. If the apprenticeship program does not specify fringe benefits, apprentices must be paid the full amount of fringe benefits listed on the wage determination for the applicable classification. If the Administrator determines that a different practice prevails for the applicable apprentice classification, fringes shall be paid in accordance with that determination. In the event the Bureau of Apprenticeship and Training, or a State Apprenticeship Agency recognized by the Bureau, withdraws approval of an apprenticeship program, the Contractor will no longer be permitted to utilize apprentices at less than the applicable predetermined rate for the work performed until an acceptable program is approved.

(b) *Trainees.* Except as provided in 29 CFR 5.16, trainees will not be permitted to work at less than the predetermined rate for the work performed unless they are employed pursuant to and individually registered in a program which has received prior approval, evidenced by formal certification by the U.S. Department of Labor, Employment and Training Administration. The ratio of trainees to journeymen on the job site shall not be greater than permitted under the plan approved by the Employment and Training Administration. Every trainee must be paid at not less than the rate specified in the approved program for the trainee's level of progress, expressed as a percentage of the journeyman hourly rate specified in the applicable wage determination. Trainees shall be paid fringe benefits in accordance with the provisions of the trainee program. If the trainee program does not mention fringe benefits, trainees shall be paid the full amount of fringe benefits listed in the wage determination unless the Administrator of the Wage and Hour Division determines that there is an apprenticeship program associated with the corresponding journeyman wage rate in the wage determination which provides for less than full fringe benefits for apprentices. Any employee listed on the payroll at a trainee rate who is not registered and participating in a training plan approved by the Employment and Training Administration shall be paid not less than the applicable wage rate in the wage determination for the classification of work actually performed. In addition, any trainee performing work on the job site in excess of the ratio permitted under the registered program shall be paid not less than the applicable wage rate in the wage determination for the work actually performed. In the event the Employment and Training Administration withdraws approval of a training program, the Contractor will no longer be permitted to utilize trainees at less than the applicable predetermined rate for the work performed until an acceptable program is approved.

(c) *Equal employment opportunity*. The utilization of apprentices, trainees, and journeymen under this clause shall be in conformity with the equal employment opportunity requirements of Executive Order 11246, as amended, and 29 CFR Part 30.

6. 52.222-10 COMPLIANCE WITH COPELAND ACT REQUIREMENTS (FEB 1988)
The Contractor shall comply with the requirements of 29 CFR Part 3, which are hereby incorporated by reference in this contract.

7. 52.222-11 SUBCONTRACTS (LABOR STANDARDS) (FEB 1988)
(a) The Contractor or subcontractor shall insert in any subcontracts the clauses entitled *Davis-Bacon Act, Contract Work Hours and Safety Standards Act—Overtime Compensation, Apprentices and Trainees, Payrolls and Basic Records, Compliance with Copeland Act Requirements, Withholding of Funds, Subcontracts (Labor Standards), Contract Termination—Debarment, Disputes Concerning Labor Standards, Compliance with Davis-Bacon and Related Act Regulations, and Certification of Eligibility*, and such other clauses as the Contracting Officer may, by appropriate instructions, require, and also a clause requiring subcontractors to include these clauses in any lower tier subcontracts. The Prime Contractor shall be responsible for compliance by any subcontractor or lower tier subcontractor with all the contract clauses cited in this paragraph.

(b) (1) Within 14 days after award of the contract, the Contractor shall deliver to the Contracting Officer a completed Statement and Acknowledgment Form (SF 1413) for each subcontract, including the subcontractor's signed and dated acknowledgment that the clauses set forth in paragraph (a) of this clause have been included in the subcontract.

(2) Within 14 days after the award of any subsequently awarded subcontract the Contractor shall deliver to the Contracting Officer an updated completed SF 1413 for such additional subcontract.

8. 52.222-12 CONTRACT TERMINATION—DEBARMENT (FEB 1988)
A breach of the contract clauses entitled *Davis-Bacon Act, Contract Work Hours and Safety Standards Act—Overtime Compensation, Apprentices and Trainees, Payrolls and Basic Records, Compliance with Copeland Act Requirements, Subcontracts (Labor Standards), Compliance with Davis-Bacon and Related Act Regulations, or Certification of Eligibility* may be grounds for termination of the contract, and for debarment as a Contractor and subcontractor as provided in 29 CFR 5.12.

9. 52.222-13 COMPLIANCE WITH DAVIS-BACON AND RELATED ACT REGULATIONS (FEB 1988)
All rulings and interpretations of the Davis-Bacon and Related Acts contained in 29 CFR Parts 1, 3, and 5 are hereby incorporated by reference in this contract.

10. 52.222-14 DISPUTES CONCERNING LABOR STANDARDS (FEB 1988)
The United States Department of Labor has set forth in 29 CFR Parts 5, 6, and 7 procedures for resolving disputes concerning labor standards requirements. Such disputes shall be resolved in accordance with those procedures and not the disputes clause of this contract. Disputes within the meaning of this clause include disputes between the Contractor (or any of its subcontractors) and the contracting agency, the U.S. Department of Labor, or the employees or their representatives.

11. 52.222-15 CERTIFICATION OF ELIGIBILITY (FEB 1988)
(a) By entering into this contract, the Contractor certifies that neither it (nor he or she) nor any person or firm who has an interest in the Contractor's firm is a person or firm ineligible to be awarded Government contracts by virtue of section 3(a) of the Davis-Bacon Act or 29 CFR 5.12(a)(1).

(b) No part of this contract shall be subcontracted to any person or firm ineligible for award of a Government contract by virtue of section 3(a) of the Davis-Bacon Act or 29 CFR 5.12(a)(1).

(c) The penalty for making false statements is prescribed in the U.S. Criminal Code, 18 U.S.C. 1001.

3.20. SIGNAGE

The Lessor shall provide, install and maintain signage acceptable to the Contracting Officer, on the exterior of the building. The sign shall read "Social Security Administration." The elevation drawings shall show the signage type and location. The Lease rate shall include the cost for the signage, installation and connection to electrical, if applicable. Necessary permits will be obtained by the Lessor. Directories and lobby signs will be provided by the Lessor in multi-tenant buildings, which will clearly identify the location of the SSA office. The Lessor will return to the Government all exterior and interior signs which the Government procured through and/or provided to the Lessor.

4.0 GENERAL ARCHITECTURAL

4.1. QUALITY AND APPEARANCE OF BUILDING EXTERIOR

The space offered should be located in a new or modern office building with facade of stone, marble, brick, stainless steel, aluminum or other permanent materials in good condition acceptable to the Contracting Officer. The building should be compatible with its surroundings. Overall the building should project a professional and aesthetically pleasing appearance including an attractive front and entrance way. The employee entrance must be covered by an acceptable canopy, as determined by the Contacting Officer. The building should have energy efficient windows or glass areas consistent with the structural integrity of the building, unless not appropriate for intended use. The facade, downspouts, roof trim and window casing are to be clean and in good condition. If not in a new or modern office building, the space offered should be in a building that has undergone, or will completely undergo by occupancy, a first class restoration or adaptive reuse for office space with modern conveniences. If the restoration work is underway or proposed, then architectural plans acceptable to the Contracting Officer must be submitted as part of the offer.

4.2. WORK PERFORMANCE

All work in performance of this lease must be done by skilled workers or mechanics and be acceptable to the Contracting Officer.

4.3. BUILDING SYSTEMS (JAN 1997)

Whenever requested, the Lessor shall furnish at no cost to GSA a report by a registered professional engineer(s) showing that the building and its systems as designed and constructed will satisfy the requirements of this lease.

4.4. SPACE EFFICIENCY

The design of the space offered must be conducive to efficient layout and good utilization.

4.5. FLOOR PLANS AFTER OCCUPANCY

Within 30 days after occupancy, 1/8-inch as-built mylar reproducible full floor plans showing the space under lease as well as corridors, stairways, and core areas must be provided to the Contracting Officer.

4.6. CAD AS-BUILT FLOOR PLANS (JAN 1997)

Computer-Aided Design (CAD) files of as-built floor plans showing the space under lease, as well as corridors, stairways, and core areas, must be provided to the Contracting Officer along with the mylar drawings required above. The plans must be in AutoCAD Release 12 (or later) .dwg format. Clean and purged files are to be submitted on 3½ inch high density diskettes, or, if approved by the Contracting Officer, on CD-ROM or QIC (¼ inch Cartridge) tape. They shall be labeled with building name, address, list of drawing(s), date of the drawing(s), and Lessor's architect and phone number. The Lessor's operator will demonstrate the submission on GSA equipment, if requested by the Contracting Officer.

4.7. FLOORS AND FLOOR LOAD (JAN 1997)

All adjoining floor areas must be of a common level, non-slip, and acceptable to the Contracting Officer. Underfloor surfaces must be smooth and level. Office areas shall have a minimum live load capacity of 50 pounds per BOMA Usable square foot plus 20 pounds per BOMA Usable square foot for moveable partitions. Storage areas shall have a minimum live load capacity of 100 pounds per BOMA Usable square foot including moveable partitions. A report showing the floor load capacity, at no cost to the Government, by a registered professional engineer may be required. Calculations and structural drawings may also be required.

4.8. EXITS AND ACCESS (SEP 1991)

Vestibules shall be provided at both public and employee entrances and exits wherever weather conditions and heat loss are important factors for consideration. In the event of negative air pressure conditions, provisions shall be made for equalizing air pressure. The doors in the vestibule at the public entrance must be heavy duty tempered glass that meets all local codes and NFPA requirements. Vestibules and door arrangements must meet ADA and NFPA requirements. Walk-off mats shall be provided at all exits that open to the exterior. Mats shall be spot cleaned and/or shampooed as required during the term of the lease.

4.9. WINDOWS (SEP 1991)

Office space must have windows in each exterior bay unless waived by the Contracting Officer.

All windows shall be weathertight. Opening windows must be equipped with locks. Off-street, ground level windows and those accessible from fire escapes, adjacent roofs, and other structures that can be opened shall be fitted with a sturdy locking device.

4.10. ACCESSIBILITY (JAN 1997)

The building and the leased space shall be accessible to the handicapped in accordance with the Americans With Disabilities Act Accessibility Guidelines (36 CFR Part 36, App. A) and the Uniform Federal Accessibility Standards (41 CFR 101-19.6, App. A). Where standards conflict, the more stringent shall apply.

4.11. LANDSCAPING (OCT 1996)

Where topographical conditions permit, the site shall be landscaped for low maintenance and water conservation with plants that are either native or well-adapted to local growing conditions. The Contracting Officer shall approve the landscaping to be provided.

5.0 ARCHITECTURAL FINISHES

5.1. BUILDING FINISHES
Building finishes shall be for first class, modern space.

5.2. LAYOUT AND FINISHES
All required finish selection samples must be provided within 14 days of the request for such by the Contracting Officer. GSA shall deliver layout drawings and necessary finish selections to the Lessor within 100 days after award or after receipt of plans and samples, whichever is later.

5.3. CEILINGS (SEP 1991)
Ceilings must be at least 9 feet and no more than 11 feet measured from floor to the lowest obstruction. Areas with raised flooring must maintain these ceiling height limitations above the finished raised flooring. The ceiling must have a minimum noise reduction coefficient (NRC) of 0.60 and a minimum Sound Transmission Class (STC) of 40 throughout the Government occupied space. Bulkheads and hanging or surface mounted light fixtures which impede traffic ways shall be avoided.

Ceilings must be a flat plane in each room and suspended with parabolic fixtures and finished as follows unless an alternate finish is approved by the Contracting Officer:

- Restrooms: plaster or pointed and taped gypsum board.
- Offices and Conference Rooms: mineral and acoustical tile or lay in panels with textured or patterned surface and tegular edges or equivalent quality to be approved by the Contracting Officer.
- Corridors and Eating/Galley Areas: plaster or pointed and taped gypsum board or mineral acoustical tile.

5.4. DOORS: EXTERIOR (DEC 1992)
Exterior doors must be heavy duty, full flush, hollow steel construction, solid core wood, or insulated tempered glass. Wood doors shall be at least 1¾ inches thick. Exterior doors shall be weather-tight and open outward. Hinges, pivots, and pins shall be installed in a manner which prevents removal when the door is closed and locked.

5.5. DOORS: INTERIOR (SEP 1991)
Doors must have a minimum opening of 36" by 80". Hollow core wood doors are not acceptable. They must be flush, solid core natural wood, veneer faced or equivalent finish as approved by the Contracting Officer. They shall be operable by a single effort and must be in accordance with national building code requirements. 12 interior doors will be required. The number of interior doors does not include restroom or wardrobe doors (if provided).

5.6. DOORS: HARDWARE (MAR 1999)
Doors shall have door handles or door pulls with heavy weight hinges. All doors shall have corresponding door stops (wall or floor mounted). All public use doors and toilet room doors shall be equipped with kick plates. All door entrances from public corridors and exterior doors shall have automatic door closers. All door entrances from public corridors, exterior doors and other doors designated by the Government shall be equipped with 5-pin, tumbler cylinder locks and strike plates. The door entrance to the private office designated by the government as the manager's office, shall also be equipped with 5-pin, tumbler cylinder lock and strike plate. All locks shall be master keyed. The Government shall be furnished with at least two master keys for each lock.

5.7. DOORS AND LOCKS
All entrance doors will have dead-bolt locks with minimum 1-inch throws. The interior of the door will be equipped with a thumb latch and a sign on the door must state, "This door must remain unlocked while the office is occupied."

In space located on the ground floor level, all rear and side doors will be constructed with solid wood cores or be metal sheathed, equipped with panic hardware with key override. A separate employee entrance providing ingress/egress without going through the reception area is required. The employee entrance door (and delivery door, if provided) will also be equipped with a push-button combination-type lock for ingress. A doorbell and peephole located approximately 54 inches from the floor is required for the employee entrance. A doorbell and peephole located approximately 54 inches from the floor is required at all delivery doors (if provided in space occupied by the Government).

In space located above ground level, all doors leading into SSA space will be constructed of solid wood cores or be metal sheathed and will have panic hardware.

All outside doors, including the door into the Automated Data Processing (ADP) room should have inaccessible hinge pins or have non-rising fixed-hinge pins.

5.8. DOORS: AUTOMATIC OPENERS (JUNE 1999)
Furnish, install, power and maintain an approved, automatic, electro-mechanical door entrance system at the public entrance, to be approved by the Contracting Officer, at the public and employee entrances, as well as employee restroom doors. The door system should consist of two sets of sliding doors with an airlock between the two sets of doors. The air lock must be heated and cooled.

5.9. *DOORS: IDENTIFICATION*

Door identification shall be installed in approved locations adjacent to office entrances. The form of door identification must be approved by the Contracting Officer.

5.10. PARTITIONS: GENERAL

Partitions and dividers must be provided as outlined below. Partitioning requirements may be met with existing partitions if they meet the Government's standards and layout requirements.

5.11. PARTITIONS: PERMANENT (SEP 1991)

Permanent partitions (from the floor to the roof-deck) must be provided as necessary to surround stairs, corridors, elevator shafts, toilet rooms, janitor closets, the managers' offices and the Government-occupied premises from other tenants on the floor.

5.12. PARTITIONS: SUBDIVIDING (OCT 1999)

(a) Office subdividing partitions shall comply with local requirements. Partitioning must be designed to provide a Sound Transmission Class (STC) of 40. Partitioning shall be installed by the Lessor at locations to be determined by the Government. The partitioning *shall extend from the finished floor to the finished ceiling. Any demolition of existing improvements which is necessary to satisfy* the Government's layout shall be done at the Lessor's expense. Partitioning shall be provided at a ratio of 1 linear foot for each 20 BOMA Usable Square Feet of space provided. Should there be a barrier wall requirement, the barrier wall partitioning will not be included in the above estimate for linear feet of partitioning. The barrier wall requirement is in addition to the linear feet of partitioning required in this paragraph. Partitioning over interior office doors is included in the measurement. Permanent partitioning and partitioning which surrounds exterior walls will not be included in unit cost adjustments but should be included as part of the annual rental rate.

(b) Partitions may be prefinished or taped and painted. HVAC must be rebalanced and lighting repositioned, as appropriate, after installation of partitions.

(c) Vinyl wall covering will be used on all interior walls (partitions) (including any support pillars, columns or barrier walls).

(d) Lessor will provide half walls (partitions for walls surrounding the raised platform detailed in the RECEPTION AREA paragraph of the SPECIFIC ROOM REQUIREMENTS section of this solicitation) at the rate of one linear foot for each 100 square feet of space, *up to a maximum of 100 linear feet. These walls will be 42 inches high from the floor of the raised platform. These* low-height partitions must consist of 5/8" Gypsum board on each side of 2-1/2" metal studs with 1-1/2" paint grade wood cap with eased edges and a 1/2" wood reveal between wood cap and partition with scheduled base. See Attachment 5.

(e) Partitioning over interior office doors is included in the measurement. Permanent partitioning and partitioning which surrounds exterior walls will not be included in unit cost adjustments but should be included as part of the annual rental rate.

(f) All wall covering must be in accordance with the following specification in the "wall Covering: Physical Requirements" paragraph in the LAYOUT AND FINISHES section of this Solicitation.

5.13. WALL COVERINGS (SEP 1991)

PHYSICAL REQUIREMENTS:

Prior to occupancy, partitioned offices and open office areas shall be covered with vinyl or polyolefin commercial wall covering weighing not less that 13 ounces per square yard as specified in FS CCC-W-408C or equivalent. The quality of finish shall be approved by the Contracting Officer.

Prior to occupancy all restrooms offered to comply with the restroom fixture schedule of this solicitation must have ceramic tile in splash areas and vinyl wall covering not less than 13 ounces per square yard as specified in FS CCC-W-408C on remaining wall areas or equivalent quality as approved by the Contracting Officer, unless an alternate finish is approved by the Contracting Officer.

Prior to occupancy all elevator areas which access the Government's leased space, hallways within or accessing the Government's leased space and eating/galley areas within the Government's leased space are to be covered with vinyl wall coverings not less than 22 ounces per square yard as specified in FS CCC-W-408C, or equivalent quality as approved by the Contracting Officer, unless an alternate finish is approved by the Contracting Officer.

REPLACEMENT:

All wall covering is to be maintained in "like new" condition for the life of the lease. Wall covering must be replaced or repaired at the Lessor's expense, including moving and replacing furnishings, anytime during the occupancy by the Government if it is torn, peeling or permanently stained; the ceramic tile in the restrooms must be replaced or repaired if it is loose, chipped, broken or permanently discolored. All repair and replacement work is to be done after working hours. In addition, the wallcoverings in the reception area must be replaced every 5 years at the Lessor's expense.

SAMPLES:

The Lessor is to provide at least 6 samples of each type of wall covering to be installed for selection by the Contracting Officer.

PAINTING:

Prior to occupancy all surfaces designated by GSA for painting must be newly painted in colors acceptable to GSA. All painted surfaces, including any partitioning installed by the Government or the Lessor after Government occupancy, must be repainted after working

hours at Lessor expense at least every 5 years. This includes moving and return of furniture. Public areas must be painted at least every 3 years.

5.14. FLOOR COVERING AND PERIMETERS (DEC 1991)

Floor covering shall be either resilient flooring or carpet tiles, except as otherwise specified in this solicitation. Floor perimeters at partitions must have wood, rubber, vinyl, or carpet base. Exceptions must be approved by the Contracting Officer.

OFFICE AREAS:
Prior to occupancy, carpet tiles must cover all office areas partitioned or unpartitioned, including interior hallways and conference rooms. The use of existing carpet may be approved by the Contracting Officer; however, existing carpet must be shampooed before occupancy and must meet the static buildup requirement for new carpet.

SPECIALTY AREAS:
Resilient flooring is to be used in reproduction rooms, storage, file and other specialty rooms. The Offeror shall provide the Government with a minimum of 6 different color samples. The sample and color must be approved by GSA prior to installation. No substitutes may be made by the Offeror after sample selection.

TOILET AND SERVICE AREAS:
Terrazzo, unglazed ceramic tile, and/or quarry tile shall be used in all toilet and service areas unless another covering is approved by the Contracting Officer.

CARPET - SAMPLES:
When carpet must be newly installed or changed, the Offeror shall provide the Government with a minimum of 6 different color samples. The sample and color must be approved by GSA prior to installation. No substitutes may be made by the Offeror after sample selection.

CARPET - INSTALLATION:
Carpet must be installed in accordance with manufacturing instructions to lay smoothly and evenly.

CARPET - REPLACEMENT:
Carpet shall be replaced at least every 10 years during Government occupancy or any time during the lease when:

- Backing or underlayment is exposed.
- There are noticeable variations in surface color or texture.

Replacement includes moving and return of furniture.

The public area is approximately 20 percent of the space. If the reception/waiting area is carpeted, the Lessor shall replace the carpet in that area every 5 years. Replacement includes both moving and return of furniture.

RESILIENT FLOORING - REPLACEMENT:
The flooring shall be replaced by the Lessor at no cost to the Government prior to or during Government occupancy when it has: Curls, upturned edges, or other noticeable variations in texture.

5.15. CARPET TILE (APRIL 2000)

All space occupied by the Government shall be provided with carpet tile meeting the following specifications. (Resilient flooring shall be provided in areas identified elsewhere in this Solicitation.)

Any carpet to be newly installed must meet the following specifications.

- Pile Yarn Content: staple filament or continuous filament branded by a fiber producer (Allied, Dupont, Monsanto, BASF), soil-hiding nylon.
- Carpet pile construction: tufted level loop, level cut pile, or level cut/uncut pile.
- Pile weight: 26 ounces per square yard is the minimum for level loop and cut pile. 32 ounces per square yard is the minimum for plush and twist.
- Secondary back: PVC, EVA (ethylene vinyl acetate), polyurethane, polyethylene, bitumen or olefinic hardback reinforced with fiberglass.
- Total weight: minimum of 130 ounces per square yard.
- Density: 100 percent nylon (loop and cut pile) -- minimum of 4000; other fibers, including blends and combinations -- minimum of 4500.
- Pile height: minimum of 1/8 inch.
- Static buildup: maximum of 3.5 KV, when tested in accordance with AATCC-134.

Carpet construction: minimum of 64 tufts per square inch.

5.16. SLAB PREPARATION FOR CARPET AND VINYL TILE (APRIL 2000)

Floor preparation prior to installation of the carpet must meet the criteria as identified by the Carpet and Rug Institute publication No. CRI 104 (phone: 800-882-8846). Prior to installing carpet and vinyl tiles, the Lessor must provide written certification that alkalinity and moisture tests have been conducted, and that alkalinity and moisture levels are within the criteria established in CRI 104. Included in the certification the Lessor must provide the moisture and alkalinity test data. No tiles are to be laid until the required levels are reached, or approval is given by the contracting office for another method to be used to make the slab acceptable for the installation of tiles. All costs incurred and any delays in accepting the space by the Government due to the slab not meeting the requirements are the Lessor's responsibility. The Lessor is strongly encouraged, as soon as possible after award, to obtain a copy of the Carpet and Rug Institute publication and to take the necessary steps to prepare the slab to meet the requirements. For new construction, plans to meet the requirements should be in place before the slab is poured.

5.17. RESILIENT FLOORING (JUN 1999)

Resilient flooring shall be installed in the following rooms: public vestibule, bathrooms, storage area, ADP room and the area around the sink in the multipurpose room. Flooring shall be of commercial quality.

5.18. ACOUSTICAL REQUIREMENTS (JAN 1997)

REVERBERATION CONTROL:
Ceilings in carpeted space shall have a Noise Reduction Coefficient (NRC) of not less than 0.55 In accordance with ASTM C-423. Ceilings in offices, conference rooms, and corridors having resilient flooring shall have an NRC of not less than 0.65.

AMBIENT NOISE CONTROL:
Ambient noise from mechanical equipment shall not exceed Noise Criteria curve (NC) 35 in accordance with the ASHRAE Handbook in offices and conference rooms; NC 40 in corridors, cafeterias, lobbies, and toilets; NC 50 in other spaces.

NOISE ISOLATION:
Rooms separated from adjacent spaces by ceiling-high partitions (not including doors) shall not be less than the following Noise Isolation Class (NIC) Standards when tested in accordance with ASTM E-336:

conference rooms:	NIC-40
offices:	NIC-35

TESTING:
The Contracting Officer may require at no cost to the Government test reports by a qualified acoustical consultant showing that acoustical requirements have been met.

The requirements of this Acoustical Requirements paragraph shall take precedence over any additional specifications in this solicitation if there is a conflict.

5.19. WINDOW COVERINGS (SEP 1991)

WINDOW BLINDS:
All exterior windows shall be equipped with window blinds. The blinds may be aluminum or plastic vertical blinds or horizontal blinds with aluminum slats of 1 inch width or less. The use of any other material must be approved by the Contracting Officer. The window blinds must have non-corroding mechanisms and synthetic tapes. Color selection will be made by the Contracting Officer.

CONSTRUCTION:
Any draperies to be newly installed, must be made as follows:

- 100 percent fullness, including overlap, side hems, and necessary returns.
- 4-inch double headings turned over a 4-inch permanently finished stiffener.
- 1½-inch doubled side hems; 4-inch doubled and blind stitched bottom hems.
- Three-fold pinch pleats.
- Safety stitched intermediate seams.
- Matched patterns.

- Tacked corners.

- No raw edges or exposed seams.

Use of existing draperies must be approved by the Contracting Officer.

SAMPLES:
A minimum of 6 patterns and colors shall be made available to the Government for selection; shading of sample fabric shall not vary markedly from that of the final product.

5.20. CLOSETS
A closet or closets should be located near the employee entrance sufficiently large enough to hold all employee's coats. The closet(s) must contain rods, a shelf above the rod(s) and have bi-fold doors.

6.0 MECHANICAL, ELECTRICAL, PLUMBING

6.1. MECHANICAL, ELECTRICAL, PLUMBING: GENERAL
The Lessor shall provide and operate all building equipment and systems in accordance with applicable technical publications, manuals, and standard procedures. Mains, lines, and meters for utilities shall be provided by the Lessor. Exposed ducts, piping, and conduits are not permitted in office space.

6.2. ENERGY COST SAVINGS (JAN 1997)

(a) All offerors are encouraged to contact an energy service company qualified under the Energy Policy Act to perform Energy Savings Performance Contracts (ESPC) to determine whether opportunities for cost effective energy improvements to the space are available.

(b) A list of energy service companies qualified under the Energy Policy Act to perform ESPCs, as well as additional information on cost effective energy efficiency, renewables, and water conservation may be obtained by writing to: US Department of Energy, Federal Energy Management Program, EE-90, Washington, DC 20585 or by calling the FEMP HELP DESK at 1-800-566-2877 and asking for the ESPC qualified list.

6.3. DRINKING FOUNTAINS
The Lessor shall provide drinking fountains adjacent to the public and employee toilet rooms.

6.4. TOILET ROOMS (JAN 1997)

(a) Separate toilet facilities for men and women shall be provided on each floor occupied by the Government in the building. The facilities must be located so that employees will not be required to travel more than 200 feet on one floor to reach the toilets. Each toilet room shall have sufficient water closets enclosed with modern stall partitions and doors, urinals (in men's room), and hot (set at 105°F, if practical) and cold water. Water closets and urinals shall not be visible when the exterior door is open.

(b) Each main toilet room shall contain the following equipment:

(1) A mirror above the lavatory.

(2) A toilet paper dispenser in each water closet stall, that will hold at least two rolls and allow easy, unrestricted dispensing

(3) A coat hook on inside face of door to each water closet stall and on several wall locations by lavatories.

(4) At least one modern paper towel dispenser, soap dispenser and waste receptacle for every two lavatories.

(5) A coin operated sanitary napkin dispenser in women's toilet rooms with waste receptacle for each water closet stall.

(6) Ceramic tile or comparable wainscot from the floor to a minimum height of 4 feet 6 inches.

(7) A disposable toilet seat cover dispenser.

(8) A counter area of at least 2 feet in length, exclusive of the lavatories (however, it may be attached to the lavatories) with a mirror above and a ground fault interrupt type convenience outlet located adjacent to the counter area.

(9) A wall mounted storage cabinet approximately 24" wide 27" high and 14" deep.

6.5. TOILET ROOMS: FIXTURE SCHEDULE (OCT 1996)

(a) The toilet fixture schedules specified below shall be applied to each full floor based on one person for each 135 BOMA Usable Square Feet of office space in a ratio of 20 percent men and 80 percent women:

(b) Refer to the schedule separately for each sex.

NUMBER OF MEN*/WOMEN	WATER CLOSETS	LAVATORIES
1 - 15	1	1
16 - 35	2	2
36 - 55	3	3
56 - 60	4	3
61 - 80	4	4
81 - 90	5	4
91 - 110	5	5
111 - 125	6	5
126 - 150	6	**
> 150	***	

* In men's facilities, urinals may be substituted for 1/3 of the water closets specified.

** Add one lavatory for each 45 additional employees over 125.

*** Add one water closet for each 40 additional employees over 150.

(c) For new installations:

(1) *Water closets shall not use more than 1.6 gallons per flush.*

(2) Urinals shall not use more than 1.0 gallons per flush.

(3) Faucets shall not use more than 2.5 gallons per minute at a flowing water pressure of 80 psi.

TOILET FIXTURE REQUIREMENTS FOR THE SOCIAL SECURITY ADMINISTRATION

	Men			Women	
	Water Closets	Urinals	Lavatories	Water Closets	Lavatories
Employee	1	1	1	2	1
Visitors	1	1	1	1	1

F. If a toilet room is located on an outside wall (i.e., the other side of the wall is outdoors), it must be served by a heating/cooling vent.

6.6. JANITOR CLOSETS

Janitor closets with service sink, hot and cold water, and ample storage for cleaning equipment, materials, and supplies shall be provided on all floors. Janitor closets shall have door(s) fitted with an automatic deadlocking latch bolt with a minimum throw of ½ inch.

6.7. HEATING AND AIR CONDITIONING (JAN 1997)

(a) Temperatures shall conform to local commercial equivalent temperature levels and operating practices in order to maximize tenant satisfaction. These temperatures must be maintained throughout the leased premises and service areas, regardless of outside temperatures, during the hours of operation specified in the lease.

(b) During non-working hours, heating temperatures shall be set no higher than 55°F and air conditioning will not be provided except as necessary to return space temperatures to a suitable level for the beginning of working hours. Thermostats shall be secured from manual operation by key or locked cage. A key shall be provided to the GSA Field Office Manager.

(c) Simultaneous heating and cooling are not permitted.

(d) Areas having excessive heat gain or heat loss, or affected by solar radiation at different times of the day, shall be independently controlled.

(e) ZONE CONTROL:
Individual thermostat control shall be provided for office space with control areas not to exceed 2000 BOMA Usable Square Feet. Areas which routinely have extended hours of operation shall be environmentally controlled through dedicated heating and air-conditioning equipment. Special purpose areas (such as photocopy centers, large conference rooms, computer rooms, etc.) with an internal cooling load in excess of 5 tons shall be independently controlled. Concealed package air-conditioning equipment shall be provided to meet localized spot cooling of tenant special equipment. Portable space heaters are prohibited from use.

(f) EQUIPMENT PERFORMANCE:
Temperature control for office spaces shall be assured by concealed central heating and air-conditioning equipment. The equipment shall maintain space temperature control over a range of internal load fluctuations of plus 0.5 Watt/sq.ft. to minus 1.5 Watts/sq.ft. from initial design requirements of the tenant.

6.8. VENTILATION (OCT 1996)

(a) During working hours in periods of heating and cooling, ventilation shall be provided in accordance with ASHRAE Standard 62, Ventilation for Acceptable Indoor Air Quality.

(b) Conference rooms of 400 BOMA Usable Square Feet or greater shall be provided with a dedicated source of ventilation or be fitted with air handling equipment with smoke/odor removing filters.

(c) Where the Lessor proposes that the Government should pay utilities:

(1) *An automatic air or water economizer cycle must be provided to all air handling equipment, where practicable.*

(2) The building shall have a fully functional building automation system (BAS) capable of control, regulation, and monitoring of all environmental conditioning equipment. The BAS shall be fully supported by a service and maintenance contract.

6.9. VENTILATION: TOILET ROOMS (DEC 1993)

Toilet rooms shall be properly exhausted, with a minimum of 10 air changes per hour.

6.10. ELECTRICAL: ADDITIONAL DISTRIBUTION SPECIFICATIONS

If the Offeror proposes that building maintenance will be the responsibility of the Government, the Lessor shall provide duplex utility outlets in toilets, corridors, and dispensing areas for maintenance purposes at no cost to the Government. Fuses and circuit breakers shall be plainly marked or labeled to identify circuits or equipment supplied through them.

7.0 TELEPHONE

7.1. TELEPHONE EQUIPMENT

The Lessor shall ensure that all outlets and associated wiring used to transmit telecommunication (voice) service to the workstation will be safely concealed in floor ducts, walls, ceilings or columns. Wall outlets shall be provided with rings and pull strings to facilitate the installation of cable. Two (2) dedicated duplex outlets are required at the telephone board.

The Government reserves the right to provide its own telecommunication (voice and data) service in the space to be leased. The Government may contract with another party to have inside working and telephone equipment installed or use wiring provided by the Lessor, if available. In any case' space for telecommunication equipment shall be provided by the Lessor. Telecommunication switchrooms, wire closets and related spaces shall be enclosed. The enclosure may not be used for storage or other purposes and shall have door(s) fitted with an automatic deadlocking latch bolt with a minimum throw of ½".

A sheet of plywood, **4' x 8' x 3/4"** will be mounted on one wall of the area.

The plywood must have a smooth surface (class C or better) and should be treated with at least two coats of flame retardant paint or sealant.. The longest side of the plywood sheet will be installed horizontally with the lowest edge 36" above the floor.

(a) Fifteen (15) telephone floor or wall outlets shall be provided. The Lessor shall ensure that all outlets and associated wiring used to transmit telecommunication (voice) service to the workstation will be safely concealed in floor ducts, walls, ceilings, or columns. Wall outlets shall be provided with rings and pull strings to facilitate the installation of cable.

(b) The Government reserves the right to provide its own telecommunication (voice) service in the space to be leased. The Government may contract with another party to have inside wiring and telephone equipment installed. Telecommunication switchrooms, wire closets, and related spaces shall be enclosed. The enclosure shall not be used for storage or other purposes and shall have door(s) fitted with an automatic deadlocking latch bolt with a minimum throw of ½ inch.

7.2. TELEPHONE CONDUIT

The Lessor must furnish and install conduit enclosing cable to telephone outlets, which must be at least one inch in diameter. If required by local ordinance, conduit must be used to enclose signal lines which connect equipment in the ADP room to other terminals located in the space. The Lessor is not responsible for installation of the telephone cabling within this conduit network. The telephone cabling and instruments will be provided by the Government.

7.3. DATA DISTRIBUTION (JAN 1997)

Floor or wall data outlets shall be provided on the basis of 1 per 100 BOMA Usable Square Feet. The Lessor shall ensure that data outlets and the associated wiring used to transmit data to workstations will be safely concealed in floor ducts, walls, columns, or below access flooring. Wall-mounted outlets shall be provided with rings and pull strings to facilitate the installation of the data cable. When cable consists of multiple runs, the Lessor shall provide cable trays to insure that Government-provided cable does not come into contact with suspended ceilings. Cable trays shall be ladder-type, and shall form a loop around the perimeter of the Government-occupied space such that the horizontal distance between individual drops does not exceed 30 feet.

7.4. ELECTRICAL, TELEPHONE, DATA FOR SYSTEMS FURNITURE (JAN 1997)

(a) The Lessor shall provide separate data, telephone, and electric junction boxes for the base feed connections to Government-provided modular or systems furniture, when such feeds are supplied via wall outlets or floor penetrations. When overhead feeds are used, junction boxes shall be installed for electrical connections. Raceways will be provided throughout the furniture panels to distribute the electrical, telephone, and data cable. The Lessor shall provide all electrical service wiring and connections to the furniture at designated junction points. Cluster groups at floor or wall locations shall be provided on the basis of 1 per 250 BOMA Usable Square Feet. A set consisting of 1 data junction box, 1 telephone junction box, and 1 electrical junction box shall comprise a cluster group. Each electrical junction shall contain an 8-wire feed consisting of 3 general-purpose 120-volt circuits with 1 neutral and 1 ground wire, and a 120-volt isolated-ground circuit with 1 neutral and 1 isolated-ground wire. A 20-amp. circuit shall have no more than 8 general-purpose receptacles or 4 isolated-ground "computer" receptacles. The isolated-ground "computer" circuits shall be installed in accordance with the September 21, 1983 edition of Federal Information Processing Standards pub. 94.

(b) Cable shall be provided, installed, and connected to systems furniture by the Lessor/contractor with the assistance and/or advice of the Government or computer vendor. The Lessor shall provide wall-mounted data and telephone junction boxes, which shall include rings and pull strings designed to facilitate the installation of cable. The Lessor shall provide a means of distributing the cable via a system of ladder-type cable trays, which shall form a loop around the perimeter of the Government-occupied space. Said ladder trays shall provide access to both telecommunications data closets and telephone closets, and shall be located such that they are within a 30-foot horizontal distance of any single drop.

8.0 ELECTRICAL

8.1. ELECTRICAL: GENERAL

The Lessor shall be responsible for meeting the applicable requirements of the National Electric Code, the National Electric Safety Code; Standards of the National Electric Manufacturers' Association, Insulated Power Cable Engineers' Association, the American Institute of Electrical Engineers and local codes and ordinances. When codes conflict, the more stringent standard shall apply. Main service facilities will be enclosed. The enclosure may not be used for storage or other purposes and shall have door(s) fitted with an automatic deadlocking latch bolt with a minimum throw of ½". Distribution panel must be circuit breaker type with 10 percent spare power load and circuits.

Convenience outlets shall be installed on the basis of a maximum of eight (8) outlets per 20-Amp circuit.

8.2. LIGHTING: INTERIOR (JAN 1997)

(a) Modern low brightness, parabolic type 2' x 4' or 2' x 2' fluorescent fixtures using no more than 2.0 watts/BOMA Usable square foot shall be provided. Such fixtures shall be capable of producing and maintaining a uniform lighting level of 50 foot-candles at working surface height throughout the space. A lighting level of at least 20 foot-candles at foot level should be maintained in corridors providing ingress and egress to the Government leased space. One to 10 foot-candles or minimum levels sufficient to ensure safety should be maintained in other non-working areas. When the space is not in use by the Government, interior and exterior lighting, except that essential for safety and security purposes, shall be turned off.

8.3. LIGHTING: EXTERIOR (JUN 1999)

(a) Building entrances and parking areas must be lighted. Ballasts are to be rapid-start, thermally protected, voltage regulating type, UL listed and ETL approved.

(b) Outdoor parking areas shall have a minimum of 1 foot-candle of illumination. Indoor parking areas shall have a minimum of 10 foot-candles level illumination.

(c) The lessor shall provide security lighting for all parking lots, as determined by the Contracting Officer. Outdoor, vandal-resistant floodlights are to be provided at all exterior entry/exit doors; where existing lighting is not adequate, as determined by the Contracting Officer. The lights should be of a quality equal to, or better than the TWP Wall-Pac 100 Watt High Pressure Sodium fixture by Lithonia Lighting, Crawfordsville, Indiana 47933.

8.4. SWITCHES (JAN 1997)

Switches shall be located on columns or walls by door openings in accordance with the "Controls" subparagraph of the paragraph entitled "Handicapped Accessibility" in the "General Architectural" section of this solicitation. No more than 1000 BOMA Usable Square Feet of open space shall be controlled by one light switch.

8.5. ADDITIONAL ELECTRICAL CONTROLS

If the Offeror proposes that the Government pay separately for electricity, no more than 500 square feet of office may be controlled by one switch or automatic light control and must be provided to all space on the Government meter, either through a building automation system, time clock, occupant sensor, or other comparable system acceptable to the Contracting Officer.

8.6. ELEVATORS (JAN 1997)

(a) The Lessor shall provide suitable passenger and freight elevator service to all GSA-leased space not having ground level access.

(b) CODE:
Elevators shall conform to the current editions of the American National Standard A17.1, Safety Code for Elevators and Escalators, except that elevator cabs are not required to have a visual or audible signal to notify passengers during automatic recall. The elevator shall be inspected and maintained in accordance with the current requirements of the American National Standard A17.2, Inspector's Manual for Elevators.

8.7. ELECTRICAL DISTRIBUTION

(a) The Lessor will provide at least two separate distribution panels.

One panel will be providing for convenience outlets and mechanical and lighting loads. It must be circuit breaker type with 25 percent spare power load and circuits. This panel shall be provided with an equipment ground bus. The feeder for this panel shall contain an equipment ground conductor. The branch breakers in the panel shall be bolt on type. Under no circumstances will circuits feeding SSA's LAN equipment run through this panel. This panel will also feed convenience outlets in the systems furniture.

The total number of required convenience outlets circuited through this power panel is:

55 duplex outlets (24 for systems furniture)
10 dedicated duplex outlets

Convenience outlets shall be installed on the basis of a maximum of eight (8) outlets per 20-Amp Circuit.

The other panel will be dedicated strictly to SSA's LAN system equipment and systems furniture power feeds. Panel capacity shall meet the requirements of the number of LAN workstations, printers, and LAN rack called for in the paragraph "SPECIAL ELECTRICAL: SSA LAN AND FURNITURE SYSTEM" below, and shown on the approved floor plan. The panel shall have a bolt-on main breaker; an isolated ground bus and equipment ground bus for SSA's computer system equipment. The power feed for the panel shall contain two insulated conductors for the two grounds. Minimum size of the equipment ground and isolated ground conductors shall be No. 6 AWG. The isolated ground conductor shall be terminated at either the service or at the neutral ground bond of the transformer feeding the dedicated panel. There shall be no splices in the isolated ground conductor feeding the IG bus. The ampacity of the panel and main breaker shall be sized for 125 percent of the present connected load plus 25 percent growth. The number of circuits will be as calculated below plus 25 percent for future expansion. The branch breakers in the panel shall be bolt on type. The panel shall be located within the SSA occupied space of the building. In the automated data processing (ADP) room and provide code-required working space. The panel shall not be located in the zone identified for the LAN rack. The power for SSA's computer equipment shall be a 208/120-volt, 60 hertz, three phase, four-wire system.

The total number of required outlets circuited through this power panel is:

24 duplex type IG NEMA 5-20 (wall mounted)
10 duplex type IG NEMA 5-20 dedicated outlets (wall mounted for LAN rack)
8 duplex type IG NEMA 5-20 dedicated outlets via systems furniture power feed.

(b) It is preferred that electrical cabling be provided overhead in conduit. Overhead cabling must be encased in ¾" conduit.

(c) The Lessor shall provide separate electric junction boxes for the base feed connections to Government-provided modular or systems furniture, when such feeds are supplied via wall outlets or floor penetrations Cluster groups at floor or wall locations shall be provided on the basis of 1 per 250 BOMA Usable Square Feet. A set consisting of 1 data junction box, 1 telephone junction box, and 1 electrical junction box shall comprise a cluster group. **(NOTE: This information is repeated for reference to the electical specifications only and is not in addition to the total number of cluster groups required per section 7.4(a).**

(d) Each electrical junction shall contain an 8-wire feed consisting of 3 general-purpose 120-volt circuits with 1 neutral and 1 ground wire, and a 120-volt isolated-ground circuit with 1 neutral and 1 isolated-ground wire. A 20-amp. Circuit shall have no more than 8 general-purpose receptacle or 4 isolated-ground "computer" receptacles. The isolated-ground "computer" circuits shall be installed in accordance with the September 21, 1983 edition of Federal Information procession Standards pub. 94.

(e) Where overhead feeds are used, 2 junction boxes shall be installed for electrical connections, 1 for isolated ground outlets and 1 for convenience outlets. Raceways will be provided throughout the furniture panels to distribute the electrical, telephone, and data cable. The Lessor shall provide all electrical service wiring and connections to the furniture at designated junction points.

8.8. ELECTRCAL EQUIPMENT

A. Surface strips across public traffic aisles will not be permitted. **It is preferred that electrical, computer cabling and telephone cabling be provided overhead in conduits.** Only a minimal use of power electrical panels serving other tenants and located outside of SSA's space are to be used for SSA service.

B. Large electrical current feeders installed in the walls, ceiling space or below the floor of SSA office space shall be enclosed in Rigid Galvanizing Steel Conduit (RGC) or Electrical Metallic Tubing (EMT) to lessen possible electromagnetic interference with SSA color terminals.

C. SSA will be responsible for final connection of all agency computer equipment to the cable to be provided and installed by the Lessor.

8.9. UNDERFLOOR DUCT SYSTEM

A. The below delineated specification for an underfloor duct system is **permitted** in existing locations but **not** a requirement. The Offeror may propose this system but such a proposal will be evaluated equal to all other Offerors. **Overhead wiring is preferred.**

B. In all new construction, if underfloor duct system is provided, it must meet the following specifications.

1. The underfloor distribution shall be any one of the following systems:
   a. Underfloor duct system
   b. Header duct system on cellular floor or
   c. Underfloor trench duct system.

   The system must comply with the National Electrical Code and meet the Underwriters Laboratories' standards.

2. The system should consist of three separate ducts:
   a. Duct for electrical service,
   b. Duct for telephone cable and signal wiring,
   c. Duct for data cable.

   The two-duct system consisting of a duct for electrical services and a combination duct for the telephone and data cable will also be acceptable.

3. The junction box cover plates shall be adjustable. The cover plates must be flush with the cement/carpet floor.

4. All junction boxes shall be spaced to provide an adequate accessibility to all wiring in the duct system.

5. All junction boxes or header ducts must be accessible even when covered with carpet.

6. The duct system shall be metallic to prevent electromagnetic interference.

7. The main duct runs should be no further apart than 5' on center.

8. The preset inserts for electrical, telephone/signal and data cable outlets shall be no more than 5' apart.

9. The duct system should accommodate flexible office rearrangements and equipment location changes. The duct system should be located to provide easy access in the entire space.

10. The duct trench system must be structurally strong to withstand heavy cart traffic without caving in.

11. The duct cell shall be free from burrs, dust, dirt and foreign matter, with a duct assembly that is water tight.

12. The floor duct system should carry only electrical wiring in use. Remove all unused cable (signal, data, telephones) prior to occupancy. The availability for space in the underground floor system should be inspected. The full capacity of the duct raceway with cable should normally be limited to 60 percent of the cross-section area of the raceway.

13. Ducts should be sized to accommodate future wiring as well as today's needs and provide for a 20 percent expansion over the term of the lease.

14. The type of service and estimate of outlets required will also determine the size of ducts. Duct dimensions may vary with manufacturers. Use the large area duct for signal, data and telephones cables and the small area duct for electrical wiring.

8.10. ELECTRICAL: ADDITIONAL INFORMATION/IWS LAN CONFIGURATION

The following specifications are provided to the offeror as an estimating tool only. They describe the electrical service and branch circuiting required for SSA's furniture and LAN system. It also describes the data cabling requirements.

The lessor must provide to SSA's electrical engineers a building riser diagram with 30 days after receiving SSA's proposed floor layout. SSA will then provide construction documents to the lessor to the power wiring and data cables related only to the computer equipment and systems furniture. The lessor is still responsible for designing the incoming electric power service and all other distribution of power.

8.10.1 IWS/LAN CONFIGURATION--GENERAL INFORMATION

The IWS/LAN components located in the SSA office will consist of bridges, token ring LAN's, workstations, and printers. The bridge equipment will consist of an IBM compatible PC attached to the Wide Area Network (WAN) via high speed 56k bit dedicated telephone lines and attached to the LAN via token ring adapter. The LAN will consist of an IBM compatible PC file server equipped with fixed disk storage, CD-ROM, removable storage, tape backup, and FAX machine.

The file server and LAN management PC will be attached to token ring Control Access Units (CAU's) and Lobe Attachment Modules (LAM's) via token ring adapters. The CAU's will be rack-mounted with patch panels to allow easy reconfiguration of cabling.

Workstations consist of IBM compatible PC desktop computers with fixed disk storage, floppy disk storage, and token ring adapters for connection to the LAN via the LAM's. Laser printers and dot matrix printers will be attached to the LAN either at the file server, workstation, or centrally located to the workstations via token ring interface.

All of the critical components of the LAN rack will be powered by an Uninterruptable Power Supply (UPS) in case of power failure.

Lessor is not responsible for the installation of the equipment -- only the site preparation.

8.10.2 IWS LAN/HEATING, VENTILATION, AND AIR CONDITIONING (HVAC) REQUIREMENTS

The ADP room shall be maintained between 68 degrees and 78 degrees Fahrenheit. The HVAC system must be capable of maintaining ± 2 degrees F. of the thermostat setting. This condition must be maintained 24 hours a day, 7 days a week. HVAC shall be thermostatically controlled within the room and be independent of the house system. The equipment located in the ADP room will be operational 24 hours a day, 7 days a week.

The IWS/LAN equipment located in the office area will operate in a standard office environment.

8.10.3 IWS LAN/MATERIALS AND EQUIPMENT TO BE PROVIDED BY THE LESSOR AS PART OF THE LEASE

Type 1A data cables, IBM # 33G2772. In air plenum areas, cables must be Plenum rated Type 1A cable, IBM # 33G8220.

IBM enhanced data connector # 60G1070 and IBM enhanced data connector #73G7500 (for installation into surface mount boxes) suitable for IBM Type 1A cable.

Faceplates, IBM # 8310572 mounted on outlet box inside columns or walls unless surface mounted box must be used if interior of wall or column cannot be accessed.

Free standing single-device housings with a face plate (IBM # 4760486) for all IWS/LAN equipment fed through the modular furniture.

A suitable size hinged metal wire trough sized for a maximum 20% fill, from the ceiling to the floor in the ADP room for the data cables at the wall behind the LAN rack. The wireway shall have an "L" shaped turn with a 6 inch extension at the floor to deliver the cables to the LAN rack.

Dedicated, 20-amp isolated ground electrical circuits. One circuit for up to four IWS/LAN workstations, one circuit for up to two printers, and two circuits for the LAN rack.

A No. 6 AWG ground conductor in 3/4 inch conduit from the LAN rack location to the electrical panel providing power to the computer equipment. Terminate the ground conductor at the equipment ground bus in the panel and leave 10 feet of ground conductor neatly coiled at the LAN rack end. (see IWS/LAN Rack Grounding Detail" below).

Isolated ground (IG) duplex receptacles, NEMA 5-20R, Hubbell IG 5362 or equal (orange in color).

8.10.4 IWS LAN/SITE PREPARATION

A. ELECTRICAL INSTALLATION

Provide additional electrical panel capacity to meet the requirements of the number of IWS/LAN workstations, printers, and LAN rack called for in this package and shown on the approved floor plan. The power for SSA's computer equipment shall be a 208/120 volt, 60 hertz, three phase, four wire system.

Provide a dedicated power panel with a bolt-on main breaker, an isolated ground bus and an equipment ground bus for SSA's computer (present Field Office Systems Enhancement (FOSE) system and future IWS/LAN system) equipment. The power feed for the panel shall contain two insulated conductors for the two grounds. Minimum size of the equipment ground and isolated ground conductors shall be No. 6 AWG. The isolated ground conductor shall be terminated at either the service ground or at the

neutral ground bond of the transformer feeding the dedicated panel. There shall be no splices in the isolated ground conductor feeding the IG bus.

The ampacity of the panel and main breaker shall be sized for 125 percent of the present connected load plus 25 percent growth. The number of circuits will be as calculated below plus 25 percent for future expansion. The branch breakers in the panel shall be bolt on type.

Locate this panel within the SSA occupied space of the building in the automated data processing (ADP) room and provide code-required working space. Do not locate panel in zone identified for LAN rack.

A separate power panel shall be provided for convenience receptacles. This panel shall be provided with an equipment ground bus. Mechanical and lighting loads may be on this panel; however, only computer loads may be on the isolated ground panel. The feeder for this panel shall contain an isolated equipment ground conductor. The branch breakers in the panel shall be bolt on type.

This panel shall be located within the SSA occupied space of the building.

Provide branch circuiting to isolated ground (IG) duplex receptacle for each IWS/LAN systems furniture workstation with a maximum of four workstations per 20-amp dedicated circuit. Provide an isolated ground (IG) duplex receptacle for each IWS/LAN workstation not associated with systems furniture such as in the Managers Office. The approved floor plan will show the location and number of workstations.

Provide an IG duplex receptacle for each IWS/LAN printer with a maximum of two printers per 20-amp dedicated circuit. The approved floor plan will show the location and number of printers.

Provide two IG duplex receptacles, each one to be connected to a 20-amp dedicated isolated ground circuit for each LAN rack shown on the approved floor plan.

The maximum number of receptacles per 20 ampere circuit shall be limited to the following:

- One receptacle for the LAN rack critical equipment (total 12 amperes).
- One receptacle for LAN rack non-critical equipment (total 12 amperes).
- Four receptacles for workstations or image server (each workstation 4.0 amperes).
- Two receptacles for laser printers or scanning work station. (each laser printer 7.8 amperes, scanner 3.5 amperes).
- Four receptacles for other printers such as line printers, (each printer 2.5 amperes.)

Adhere to the following criteria:

- Workstations shall not be on the same circuit as printers, faxes or scanner workstations.
- Image servers may be connected to workstations, but not printers, faxes or Scanner workstations
- The LAN rack requires two separate dedicated outlets, each one on a 20-amp dedicated IG circuit (12 amps each).
- A FAX is similar to a printer that consumes 5.0 amperes and can be grouped with other printers.
- Only laser printers shall be on the same circuit with other laser printers.

All the receptacles for the computer equipment shall be isolated ground (IG) type and shall meet requirements of NEC 250-74 Exception No. 4.

All the IG receptacles shall be powered from the dedicated electrical panel board with an isolated ground bus and equipment ground bus.

Provide and install IG receptacles that are NEMA 5-20R, Hubbell IG 5326 or equivalent, orange in color.

Provide grounding wire for the LAN rack per "IWS/LAN Rack Grounding Detail" below. The LAN rack will be delivered and installed by SSA's IWS/LAN contractor.

Each branch circuits for the computer equipment shall be provided with a separate isolated ground a separate neutral and a shared equipment grounding conductor with a maximum of three circuits shared per equipment ground conductor. Provide no more than three circuits per home. All the branch circuits for the convenience receptacles shall be provided with equipment ground conductors.

All receptacles in the ADP room associated with a given LAN rack should be placed on the same phase.

Identify each receptacle with the breaker number and the device (IWS/LAN workstation, printer, or LAN rack) to be connected to it. Identify each breaker at the panel and the devices it serves.

Receptacles are to be marked (neatly printed) with an alphanumeric marking system approved by the local manager.

Provide isolated grounds as defined in National Electrical Code (NEC) and Federal Information Processing Standards (FIPS) 94, "Guideline on Electrical Power in ADP Installation."

Provide additional standard electrical circuits and install receptacles as shown on the approved floor plan.

Large electrical current feeders installed in the walls, ceiling space, or below the floor of SSA office space shall be enclosed in rigid galvanized steel conduit (RGS) or Electrical Metallic Tubing (EMT) to lessen possible electromagnetic interference with SSA color IWS/LAN workstations.

Unless wire is being run in underfloor ducts, use conduit for wire, non-metalic sheath cable (e.g. Romex) is unacceptable. Use Rigid Steel Conduit, or Intermediate metal conduit. EMT (Electrical Metal Tubing) may be used in dry concealed locations and flexible steel conduit is permitted only when the run is concealed in walls (dry locations) and power poles. Conduit should be run concealed except in electrical or mechanical equipment rooms. Minimum size of conduit shall be ¾".

Provide "THHN/THWN" insulation solid or stranded copper wire for wire sizes no. 10 AWG and smaller. Provide "THHN/THWN" or "XHHW" insulation, stranded copper wire for wire sizes no. 8 AWG and larger.

Provide color coding on feeders and branch circuits as follows 208/120 and 240/120 volt systems Phase A-black; Phase B-red; Phase C-blue; Neutral-white; Equipment Ground-green; Isolated Ground-green with yellow bands. Provide color coding for 480/277 volt wiring as above excepct: Phase A-brown; Phase B-orange and Phase C-yellow.

B. DATA CABLE INSTALLATION

Provide and install a data cabling system with outlet boxes where required. Cable for the IWS/LAN workstations and printers shall be IBM Type 1A cable, IBM # 33G2772, with a enhanced connector, (IBM # 60G1070 or IBM #73G7500 where necessary) suitable for IBM Type 1A cable on each end and NEC approved. In all air plenum areas, data cable must be Plenum rated, IBM # 33G8220, to meet NEC requirements, NEC 800-3d, 725-2 (b).

Data cable is to be a continuous run with no splices or butts and without kinks or sharp turns. The cable must not be laid immediately adjacent to fluorescent lighting, A/C power lines or motorized devices. Data cable must be installed to maintain the maximum separation from A/C power lines that is practical.

The maximum distance from the wiring closet to the work area is 330 feet. The maximum distance from wiring closet to wiring closet is 660 feet.

Wire Closet/Centers: (Wiring closet information contained herein should only be used in offices where no ADP room is used (i.e. large sites with multiple LANs). All field offices should be using ADP rooms. The ADP room should be at least 200 sq. ft. The LAN rack area is 7 ft. by 7 ft.

The size of the wiring closet/center is determined by the number of drops planned. Allow enough closet space for a 23-inch rack (rack size: height six feet, width 23 inches, depth 2 feet).

Additional wiring space may be needed for the following:

- Other electronic equipment
- Additional cables
- Additional racks for expansion

Convenience power outlets should be installed and available, one outlet for test equipment and one outlet for rack equipment. Locks on the wiring closet door should be provided to prevent unauthorized access to the communication cabling system. If space, power outlets, or locked wiring closet are not available, then a centrally located room (the ADP room in SSA offices) can be chosen, so long as it meets the same criteria as the wiring closet.

All cable runs between each existing IWS/LAN workstation and printer and the wiring closet/center must be point-to-point cable runs. Under NO circumstances shall any point-to-point cable be spliced to achieve the required distance.

All cable runs that are to be installed should be grounded according to IBM specifications. The cable is to be grounded at the wiring center.

Cable modular furniture with internal cabling (see below).

C. THE CONTRACTOR SHALL DO THE FOLLOWING:

Supply and install Type 1A cable (IBM # 33G2772) or Type 1A Teflon (IBM # 33G8220) as required, connectors (IBM # 60G1070 or IBM#73G7500), suitable for IBM Type 1A cable, on both ends of the data cable,

Supply and install faceplates, IBM # 8310572 and surface mounted boxes at the IWS/LAN equipment located at columns or walls, or free standing single-device housings with a face plate and a magnetic backing (IBM # 4760486) for all IWS/LAN equipment fed through the modular furniture.

Supply and install all wireways and wire molds as required.

Supply and install the data cable from each IWS/LAN workstation and printer to the ADP room, leaving a 15-foot pigtail. Terminate the office end at a faceplate or surface mount box as required. The cable in the ADP room be stripped back to expose the metal braiding 24" back from the data connector for grounding to the LAN rack.

Provide a LAN rack identification number to the SSA office manager. The number shall be of 1 inch size and shall be comprised of the following:

For example: 05-321-02-01 (Region-Office Code-Floor-ADP room). The SSA office manager will give this to the IWS/LAN vendor for installation on the LAN rack.

ALL the data cables shall be identified at both ends by labels with the following numbering scheme:

- Workstation cables - WS001, WS002, etc. (match the numbers with the modular furniture cubicle numbers, followed by workstations not associated with modular furniture, such as the Managers office).
- Workstations in training area - WST followed by three digit number in continuation of the workstation cable numbers under "A" above.
- Laser printers - LP followed by three digit number in continuation of the training workstation cable numbers under "B" above.
- Line printers - DP followed by three digit number in continuation of the form printer cable number under "C" above (one per office).
- FAX machine - FX followed by three digit number in continuation of the line printer cable number "D" above (one per office).
- Scanner Work Stations-SWS followed by three digit number in continuation of the FAX cable number "E" above (one per office).
- Image Server-IS followed by three digit number in continuation of the scanner work station number under "F" above (one per office).

Identification labels shall be provided on the face plates of the cable termination boxes.

Conduct a continuity test on each installed cable.

Certify in writing that all data cables have continuity.

Identify the cable terminations for each device on the desk layout, and indicate the cable label for each cable.

Certify in writing that the cable termination codings are correct.

Mark up, and provide to the local SSA manager, a desk layout drawing to show an "as built" status for electrical and data cabling, including an identification of all electrical and data circuits.

Discuss all cabling drawing with the local manager to assure that all marked-up drawings are clear and understood.

D. GENERAL

If the work is to be done in an existing, operating SSA office, the SSA operation must continue. The contractor must provide proper phasing of the work so as not to interfere with SSA operations.

8.10.5 IWS LAN/SOCIAL SECURITY ADMINISTRATION MODULAR FURNITURE INSTALLATION MODIFICATIONS TO SITE

Lessor's site preparation may include upgrading the electrical distribution system, providing new transformers, feeders, and electrical power panels with an isolated grounding (IG) system if the existing system is not adequate to meet needs as stated in this package. It shall also include installing new branch circuit wiring for convenience and IG receptacles and installing data cables for computer hardware. The quantity of computer equipment required by this package may increase the HVAC requirements.

The data communications equipment which is not based in the ADP room will be located in the general office area.

Site preparation modifications shall be completed in two phases.

- Phase I work involves upgrading the electrical distribution system and providing transformers, feeders and power panels as needed. This includes the installation of additional electrical ducts, conduit, and junction boxes near the modular furniture access points which will be identified on the designer's exact furniture layout and electrical schematic. It also includes upgrading the electrical system, providing new transformers, feeders, and electrical power panels with an isolated grounding (IG) system to meet needs as stated in this package, and installation of additional wiring/cabling from electrical power panels to junction boxes, telephone closets, and the Intelligent Workstation/Local Area Network (IWS/LAN) rack to access IWS/LAN workstations and printers. This phase of site preparation is to be completed prior to the installation of the modular furniture.

- Phase II work occurs during modular furniture installation completed by a government contractor. It is anticipated that the electrician's work will begin approximately half way through the furniture installation and will be completed no later than Sunday. The entire office (not just the reception area) must be operational Monday morning. The exact scheduling of the Phase II work will be discussed in detail at the pre-installation meeting about one month prior to the installation of the furniture. This phase involves installing data and telephone cabling (telephone cable will be installed by a telephone contractor provided by the government) as described below. The lessor is required to connect the pigtail leads from the modular furniture to the wiring in the junction boxes, test all the prewired receptacles in the modular furniture, install data cables in the modular furniture raceways, and terminate all the data cables with the specified connectors. All of the Phase II site preparation work must be coordinated and done in conjunction with the furniture movers, furniture installers, and the telephone installers. Once phase II work begins, it shall continue until the entire project is completed, including the installation of all modular furniture, electrical, data and telephone cabling. Exact schedules will be determined approximately one month before furniture installation occurs. The General Services Administration (GSA), the lessor, SSA, and contractors will meet to establish the schedule. It is anticipated that phase II work will be completed in 5 calendar days starting on Friday, proceeding through the weekend, and completed on Tuesday. The reception area must be ready for business on Monday.

Note: The telephone cabling is not a part of the lessor's site preparation, but site preparation work must be coordinated with and accommodate a telephone contractor (provided by the government) to do the necessary cabling for the telephone system.

A. BACKGROUND ON THE SPECIFICS OF ELECTRICAL, TELEPHONE, AND DATA CABLING OF MODULAR FURNITURE PANELS

SSA will install prewired modular furniture. The office space shall be prepared electrically to power the furniture. A plan indicating the furniture layout and computer equipment will be provided to GSA.

The furniture is fitted with isolated ground receptacles and convenience receptacles. A group of furniture workstations are connected together electrically and terminate into an eight wire flexible whip, of which only seven wires are used. The whips will be passed through power poles and left in ceiling space for termination to electrical junction boxes by the lessor's electrical contractor. In case the office space is provided with an underfloor duct system for power distribution, the furniture whips will be left at the floor for termination into floor mounted junction boxes by the lessor's electrical contractor.

1. The modular furniture will be provided with both electrified and nonelectrified panels.
2. The electrified panels will be provided with two separate metal raceways, one for power wiring and the other for data and telephone cables. Details of the modular furniture panels will be furnished to the successful offeror after lease award.
3. The raceway for power wiring will be located horizontally at the bottom of the furniture panel; the raceway for the data and telephone cables will be located horizontally at the top of the furniture panel.
4. The two raceways for power wiring, and for the data and telephone cables will be interconnected by vertical metal raceways at the corners and ends of some panels. These raceways are fitted with easily accessed raceway covers.
5. The modular furniture is provided with a prewired electrical system. The raceway is a plug-in type bus duct with a provision for plugging in power feed and receptacles. The bus duct has 8 conductors composed of four phase conductors, two neutral conductors, and two ground conductors.

   a. SSA has chosen to use only 7 conductors. One of the phase conductors is not used. Two phase conductors, a neutral conductor, and an equipment ground conductor power two convenience outlet circuits. A third phase conductor, second neutral conductor, and an isolated ground conductor power an isolated ground receptacle circuit.

   b. The furniture manufacturers offer 6 types of NEMA 5-20 receptacles. These are identified by numbers 1 through 6. Each type of receptacle, when plugged into a bus duct, connects to a certain combination of phase, neutral, and ground conductors.

   c. SSA has opted to procure only three types of receptacles, which are No. 1, No. 2, and No. 5. Receptacles No. 1 and No. 2, when plugged into the bus duct of the modular furniture, connect to two different phase conductors, a common neutral conductor, and an equipment ground conductor. These are ivory in color and make up convenience outlets. Receptacle No. 5, when plugged into the bus duct of the modular furniture, connect to the third phase conductor, another neutral conductor, and the isolated ground conductor. These are orange in color and make up isolated ground outlets.

6. The modular furniture is also provided with empty raceways for telephone and data communication cabling to be utilized by SSA. The data cables installed in the bottom raceway along the power bus duct shall be kept to a minimum.

7. Panel schedules and circuit designator shall be provided for modular furniture isolated ground receptacles (type No. 5) and convenience receptacles (type No. 1 and type No. 2).

8. To accommodate the snap-in receptacles, the furniture panels will be prewired to meet the following requirements:

   - One circuit for a maximum of 10 No. 1 convenience duplex receptacles and 10 No. 2 convenience duplex receptacles to meet the requirements of the latest edition of the National Electric Code (NEC).
   - One dedicated circuit for no more than four IG duplex receptacles for four IWS/LAN workstations and image server.

- No more than four IG outlets for four dot-matrix printers (line printers).
- No more than two IG duplex receptacles for two laser printers and scanner workstations.
- No more than an IG outlet for a FAX machine.

NOTE: Depending on the configuration of the space offered, the printers and possibly some of the IWS/LAN workstations may be located outside of the modular furniture configuration. The lessor must furnish and install data cabling, electrical wiring, and IG electrical outlets as described in the IWS/LAN sections of these special requirements in those locations.

9. The furniture panel manufacturer will provide power poles with pigtails as an integral part of the furniture panels which will be coordinated by the furniture installer with the reflected ceiling plan. The pigtails will extend about 2 feet from the top end of the power poles.

10. The electrical wiring to power pole raceways will consist of an electrical harness with 20-ampere capacity, UL approved, 8-wire system. The system can be connected to 120/208 volt, three phase service by using seven wires. (The pink wire is not used.) The system can also be connected to 120/240 volt, single phase service by using six wires. (The red and pink are not used.)

11. All the raceways for power, data and telephone will be provided with a safety ground in accordance with the latest edition of the NEC.

B. LESSOR REQUIREMENTS AND RESPONSIBILITIES - PHASE I

1. ELECTRICAL - The lessor shall:

a. Provide additional electrical power requirements such as transformers, power panels, and feeders as required to meet the anticipated power demands. If the office needs an air cooled step down transformer, it shall be located a minimum 8 feet away from the ADP room.

b. Determine the type of existing electrical service, e.g., 120/208 volts, 3 phase ; or 277/480 volts, 3 phase; or 120/240 single phase. Verify that building service and transformer are large enough for the additional electric load.

c. Provide Isolated Grounding System as indicated in SSA's Official Policy on the following pages.

d. Provide new power panels with an isolated grounding bus, sufficient number of circuit breakers (20 amp capacity each), and new power feeders.

e. Provide and install wall or floor receptacles for any IWS/LAN workstations, printers, and IWS/LAN rack outside of the modular furniture area. These will be shown on the designer prepared floor plans. An IG duplex receptacle is required for each IWS/LAN workstation and each printer, and two IG receptacles are required for the IWS/LAN rack. Provide branch circuit wiring from the electrical power panels not to exceed the dedicated circuit requirements listed in A. 8. above.

f. Provide and install additional electrical outlets and telephone outlets outside of the modular furniture area in accordance with GSA specifications and where shown on the designer prepared floorplan. These outside electrical outlets will be supplied at the ratio 1 for each 100 square feet of space. These outside telephone outlets will be supplied at the ratio of 1 for each 125 square feet of space.

g. Furnish and install suitably sized junction boxes, sufficient to handle the load, above the ceiling (with conduit) in the vicinity of the feeding points of the modular furniture panels.

h. Provide branch circuit wiring from power panels to the junction boxes combining circuits in different junction boxes and other IG duplex receptacles so as not to exceed the maximum limits indicated in A. 8. above. All the branch circuits for IG duplex receptacles in the ADP room associated with the IWS/LAN rack shall be connected to the circuit breaker on the same phase in the power panel.

i. Provide grounding wire for the LAN rack per "IWS/LAN Rack Grounding Detail" below. The LAN rack will be delivered and installed by SSA's IWS/LAN contractor.

j. Temporarily cap-off the wiring in the junction boxes until modular furniture installation. Make all connections in power panels and keep the circuit breakers off.

k. Mark each circuit with the breaker number and the computer hardware (IWS/LAN workstation, printer, or IWS/LAN rack) to be connected to it. Identify each breaker at the panel and the devices it serves. Receptacles are to be marked with an alpha/numeric marking system approved by the SSA local manager. The type of marking device shall be approved by the SSA manager as well. It must be a permanent type of marking painted on or attached to, the cover plate of each receptacle. Identify receptacles on the electrical layout drawing with the same standard alpha/numeric marking system. It is especially important that all circuits be clearly identified at the breakers of the power panel, the junction boxes, and on the electrical layout drawing to preclude error and facilitate connections in Phase II of the project.

2. DATA CABLING - The lessor shall:

a. Furnish and install data cables (Type 1A cables, IBM # 33G2772. In air plenum areas, cables must be Plenum rated Type 1A cable, IBM # 33G8220) from the IWS/LAN rack in the ADP room to each of the printers and IWS/LAN workstations leaving a 15-foot pigtail of cable from the end of the wireway at the floor near the LAN rack location in the ADP room with 2 feet of exposed braiding to terminate at the LAN rack. The cables shall be installed through ducts, conduits or plenum areas. Teflon cable must be used in plenum areas. Provide necessary conduits, ducts, surface - mounted raceways, etc., to protect cables from physical damage. Provide hangers and support for the cables in the plenum areas in accordance with industry standards.

Provide a suitable size wire trough (metal with hinged opening for accessibility) for 20% fill, from ceiling to floor in the ADP room for the data cables at the wall behind the LAN rack. The wireway shall have "L" shaped turn with a 6 inch extension at the floor to deliver the cables to the LAN rack.

The total length of each cable will vary in accordance with the equipment location, office layout, and space configuration. Equipment distribution will generally be uniform throughout the work area.

Five IBM Type 1A data cables, each 25 feet long, terminated at both ends with IBM Type 1A cable connectors to be given to the SSA office manager. These will be given to the IWS/LAN vendor for the interconnection of computer equipment in the LAN rack.

A total of 24 individual cables with connectors will be required.

b. Provide and install connectors, IBM # 60G1070 suitable for IBM Type 1A cable.

c. Leave enough cable length to be installed in designated raceways in the modular furniture panels plus 18-24 inches of slack end from furniture access hole to the surface mount box to each terminal or printer location.

d. ALL the data cables shall be identified at both ends by labels with the following numbering scheme:
   1) Workstation cables - WS001, WS002, etc. (match the numbers with the modular furniture cubicle numbers).
   2) Workstations in training area - WST followed by three digit number in continuation of the workstation cable numbers under "A" above.
   3) Laser printers - LP followed by three digit number in continuation of the training workstation cable numbers under "B" above.
   4) Line printers - DP followed by three digit number in continuation of the form printer cable number under "C" above (one per office).
   5) FAX machine - FX followed by three digit number in continuation of the line printer cable number "D" above (one per office).
   6) Scanner Work Station-SWS followed by three digit number in continuation of the FAX cable number under "E" above (one per office).
   7) Image Server-IS followed by three digit number in continuation of the scanner work station number under "F" above (one per office.)

   Identification labels shall also be provided on the face plates of the cable termination boxes.

e. Neatly coil extra length cabling above the ceiling and properly support or store it to protect it from damage.

3. OTHER CONSTRUCTION

The lessor shall complete all other construction and alterations necessary to comply with this solicitation for offers. As phase II work, which is described below, is being completed the office must be ready for immediate use by SSA Personnel.

C. LESSOR REQUIREMENTS AND RESPONSIBILITIES - PHASE II

1. ELECTRICAL - The lessor shall:

a. Connect the pigtails of the pre-wired furniture panels to the branch circuit wiring in the junction boxes.
b. Turn on the circuit breakers in the power panels for the circuits feeding modular furniture and test each receptacle in the furniture to verify that it is energized and connected properly.
c. Identify each receptacle in the modular furniture by circuit number and the power panel, and update the directory in the power panel. Provide details on the electrical layout schematic to show the "as-built" status for all of the receptacles. A copy of the "as-built" plans shall be provided to the local manager.
d. Provide a grounding wire for the LAN rack per "IWS/LAN Rack Grounding Detail" below.

2. DATA CABLING - The lessor shall:

a. Complete installation of the data cables from the IWS/LAN rack in the ADP room through the modular furniture panel raceways to each IWS/LAN workstation and each printer. Complete remaining installation of data cables outside of the modular furniture configuration.

NOTE: At the office end of the data cable, provide faceplates, IBM # 8310572. Provide surface mounted boxes at the IWS/LAN equipment located at columns or walls. Provide free standing single-device housings with a face plate and a magnetic backing (IBM # 4760486) for all IWS/LAN equipment fed through the modular furniture.

b. Install Type A connectors (refer to IWS/LAN requirements above) at both ends of all data cables installed.

c. Make sure that both ends of each of the data cables are properly marked. Provide details on the electrical layout schematic to show the "as-built" status for all the data cables.

d. Conduct the following continuity tests on each installed data cable:

1) For the central conductor from end to end.
2) For body or casting of the Type A connector from end to end.
3) Insulation test between the center pin and the body (casting) of the Type A connector.

e. Certify in writing that all data cables have continuity and no shorts.

f. Certify in writing that the data cable termination codes are correct. Provide copy of both certifications to the local SSA manager.

3. The lessor shall certify and submit the final "as-built" drawings, including the modular furniture wiring and cabling, to the local SSA manager.

All electrical/cabling work shall be performed in conformance with local electrical codes. Final approval of the work performed shall be made by the SSA local manager or the SSA RO representative.

D. SCHEDULING AND COORDINATION

1. Lessor shall coordinate the access to the office with the local manager where space is currently occupied.

2. SSA may arrange to have the telephone equipment vendor complete the necessary telephone site preparation (precabling) activities during Phase I.

3. Following completion of Phase I site preparation, the agency will notify the furniture manufacturer that the office is ready for furniture installation (Phase II) and schedule a pre-installation meeting with GSA, the furniture installer and the lessor. The meeting agenda will include clarification of Phase II activities, scheduling and determination of the specific Phase II installation start and end dates.

4. It shall be necessary for the lessor to have an adequate number of electricians on the job to keep pace with the furniture installers. Once the furniture installation begins on the designated date, the installation will proceed until the entire office has been completed.

5. All electrical/cabling work shall be completed in conformance with local electrical codes. Final approval of the work performed shall be made by GSA.

E. INSPECTION AND AS-BUILT PLAN REQUIREMENTS

1. A pre-occupancy inspection of the completed work is to be made with representatives of the lessor, general contractor, electrical contractor, GSA, and SSA present.

2. The lessor shall furnish to GSA within two weeks of occupancy, as-built drawings of the completed work that shows the following as a minimum:

a. All usual building features such as partitions, doors, electrical panels and receptacles, telephone outlets, fire extinguishers, water fountains and plumbing fixtures.

b. All IWS/LAN component locations and identification markings for the following:

1) Special electrical panels and receptacles.

2) All electrical junction boxes where any IWS/LAN circuit components have been combined.

3) Data cable ends.

4) Intrusion alarm controls, sensors and related devices, where applicable.

c. Any unusual features that may exist in addition to those listed above.

8.10.6 IWS LAN/DEFINITION OF TERMS SSA OFFICIAL POLICY

Use of the National Electric Code (NEC), Federal Information Processing Standards (FIPS) Publication 94 and SSA Definition of Dedicated Lines, Isolated Ground, Feeders and Branch Circuits, Convenience Receptacle Branch Circuits, and a Description of the Modular Furniture Feeds.

1. NEC & FIPS PUB. 94

The NEC is published by the National Fire Protection Association (NFPA) and is part of most building codes. Compliance with the latest edition of this code is mandatory for electrical installation to safeguard person and property from hazards arising from the use of electricity. Some local building codes may also have additional requirements. FIPS Publication 94 dated September 21, 1983 and published by the U.S. Department of Commerce/National Bureau of Standards, provides guidelines on electric power for ADP installations. SSA's Division of Realty and Space Management insists upon use of both NEC and FIPS 94.

2. DEDICATED LINE

A dedicated line is a separate branch circuit which runs from an isolated ground (IG) receptacle or series of IG receptacles to the breaker with the same or similar type of equipment plugged into it. A dedicated circuit will not share phase, neutral or ground wires with any other circuits. It does not mean that each electrical device, such as a computer terminal, has its own breaker. This would overtax the quantity of breakers required in each panel board.

Noncompatible devices such as typewriters, coffeepots, printers, controllers, microwave ovens, etc., should not be plugged into the workstation dedicated line. Further, a series of printers should have a separate dedicated line and each Intelligent Workstation/Local Area Network (IWS/LAN) rack should have its own dedicated line. This requirement is to reduce line noise and avoid sudden common voltage drops created by noncompatible devices.

A branch circuit can power ten convenience receptacles as limited by the NEC. The code states that the continuous current supplied by a branch circuit shall not exceed 80 percent of the branch circuit rating. This would be 16 amps for a 20-amp circuit breaker and 12 amps for a 15-amp circuit breaker.

Each receptacle must be marked with the breaker number it is connected to. This may assure that noncompatible devices are not connected to the same breaker and dedicated line.

3. ISOLATED GROUND (IG) - FOR RECEPTACLES

An IG in a branch circuit is a separate, insulated grounding wire that runs from an isolated grounding-type receptacle (usually orange in color) to the panel box. It is connected to a special insulated separate ground strip or bus which is in turn connected by an insulated wire to the main building service ground, avoiding any contact with the conduit, electrical boxes, and neutral bus. This grounding conductor may pass through one or more panel boxes without any connection to the panel box grounding terminal.

The main building service ground is a point at the electrical service entrance where the neutral of the incoming service or neutral of the service transformer is bonded to the service equipment ground. An IG should not run to an isolated earth ground or a water pipe.

This installation shall meet the requirements of FIPS PUB. 94 dated September 21, 1983, "Guidelines on Electric Power for ADP Installation" issued by the Bureau of Standards and the article 250-74 exception No. 4 of NEC.

The integrity of the isolated ground is essential to proper operation of the IWS/LAN equipment. The isolated ground is to be provided in addition to the electrical grounding as required by article 250 of the latest edition of the NEC, which is solely a safety requirement.

4. FEEDER AND BRANCH CIRCUIT

A feeder is an electric circuit between the service equipment, such as a distribution board or a switch board, and a panel board.

A branch circuit is an electrical circuit between a breaker in the panel board and receptacles or devices on the floor.

A 3 wire 120 volt branch circuit for IG receptacles will have one phase wire connected to a circuit breaker, one neutral connected to the neutral bus in the panel, and one insulated ground wire connected to the isolated ground bus in the panel. In addition, the conduit and all the non-current carrying metallic parts of the system shall be grounded in accordance with the requirements of the NEC.

5. CONVENIENCE RECEPTACLES BRANCH CIRCUITS

One common neutral wire can be provided for two or three phase circuits provided these circuits are connected to circuit breakers of different phases. Consequently, two circuits connected to the same phase shall be provided with two separate neutral wires.

Therefore, a 4 wire 208 volt branch circuit will have two different phase wires, one neutral wire, and one equipment ground wire.

Similarly, a 5 wire 208 volt branch circuit will have three different phase wires, one neutral wire, and one equipment ground wire.

6. MODULAR FURNITURE FEED

A 7 wire 120/208 volt feed for the modular furniture will have one dedicated circuit and two convenience receptacle branch circuits. The dedicated circuit will have one phase wire, one neutral wire, and one IG wire. The two convenience receptacle branch circuits will have two phase wires, one neutral wire, and one safety ground wire. This safety ground wire will serve both the dedicated branch circuit and the convenience branch circuit.

7. IG RECEPTACLE CIRCUITING REQUIREMENT

No more than four IG receptacles for IWS/LAN workstations and image server per circuit.

No more than two IG receptacles for Laser printers and scanning work station per circuit.

Two IG receptacles each on a separate circuit for the IWS/LAN rack.

If additional information is desired or you have questions about this policy, you may contact DRSM's electrical engineer, Mr. Mulchand Lala, 410-965-4948.

8.10.7 IWS LAN/ATTACHMENTS

Reference Attachments 2.1-2.4 for Typical receptacle wiring diagrams.

Typical receptacle wiring in system furniture and typical IBM cable installation diagrams are available upon request.

9.0 SPECIFIC ROOM INFORMATION

The following paragraphs delineate the specific room type area and any special requirements.

9.1. PRIVATE OFFICES (JUN 1999)

Approximately 255 square feet total for three offices

A. Two (2) private offices as follows: 1) A District Manager's office with 165 sq. ft.; 2) A Private Interview room with 90 sq. ft. Each will require a double pane observation window 48" wide and 36" high, with sill approximately 42" above the floor. Location in the partition will be indicated on the approved layout. Alternate window designs of different configuration which will enhance the appearance of the office or which represent a building standard configuration are acceptable. The installation of up to two interior windows will include installed drapes or mini-blinds.

B. The door entrance to one private office, designated by the government as the manager's office, shall be equipped with a 5-pin, tumbler cylinder lock and strike plate. The lock shall be master keyed. The Government shall be furnished with at least two master keys for this lock.

9.2. ADP ROOM

Approximately 200 square feet each

A. Architectural

The entry door to the room shall be solid wood core or metal sheathed with hinges mounted inside the room. The room shall be secured with a six pin tumbler, off master lock with a deadbolt lock having a minimum throw of 1". All keys to the room shall be controlled by SSA. The floor covering shall be smooth vinyl tile. A carbon dioxide fire extinguisher is required. This room must be secure from other than Social Security Administration (SSA) employees; therefore, no equipment other than SSA equipment (data equipment, telephone equipment) can be placed in this room. The IG electrical panel that powers SSA's LAN equipment must be located in the ADP room.

B. Heating, Ventilating and Air Conditioning (HVAC) Requirements

In general, the ADP Room shall be maintained at a temperature range of between 68°F and 78°F during office hours and no less than 55°F nor more than 80°F during non office hours, 24 hours per day, 7 days per week. Relative humidity will be maintained between 20 and 80 percent. The room shall be separately zoned and have its own separate thermostatic control inside the room. The HVAC system shall be designed to supply on the average 6 complete air changes per hour with a minimum of 20 percent fresh air.

Both the telephone system, as described in the "Telephone Equipment" paragraph in the TELEPHONE section of this Solicitation, and the computer equipment will be installed in the ADP Room.

9.3. MULTIPURPOSE ROOM

Approximately 160 square feet

A. Architectural

All walls surrounding the Multipurpose Room shall have minimum Sound Transmission Coefficient (STC) of 45 or better. The room shall have a chair rail surrounding the inside walls of the room pursuant to the specifications given in paragraph E of the "Reception Area" paragraph in the SPECIFIC ROOM INFORMATION section of this Solicitation. The door and frame construction shall be designed to meet the same STC requirement as the surrounding wall. The floor covering shall be vinyl tile around the sink area and carpet tiles in the remaining area.

B. Cabinets and Sink:

Provide a double basin stainless steel (equivalent to Elkay Celebrity GECR-3321) with hot and cold water lines, drain, garbage disposal, paper towel holder and soap dispenser. The sink is to be mounted in wood cabinets with Formica brand (or equivalent) laminate counter with 4" back splash. Cabinets are to be divided into one 48" open cabinet (to meet ADA guidelines) for sink base and two 24" cabinets. The 24" cabinets are to have one adjustable shelf, full depth, one 6" high drawer and two 12" wide doors. Doors and drawers are to be provided with one 4" wire pull each. Upper cabinets are to be 96" in length, divided into 4 equal units and 26" high overall. Each unit is to have two adjustable shelves full depth and two 12" doors full height. Each door is to have one 4" wire pull. All finishes are to be Formica brand laminate (or equivalent). Finishes should be applied pursuant to Manufacturer's specifications to avoid laminate from separating from countertop.

Folding Wall: Yes __X__ No ____

C. An acoustically treated folding wall will be provided by the Lessor as an initial space alteration. The wall should be of a quality equal to, or better than, the Soundguard Model 37, manufactured by Holcomb and Hoke Manufacturing Company, Indianapolis, Indiana. The length of this partition will range between 15 to 30 linear feet.

D. Install three (3) dedicated duplex outlets on separate circuits in the multipurpose room.

9.4. STORAGE ROOM

Approximately 150 square feet

This room requires both resilient floor covering and vinyl wall covering. It should be constructed in accordance with the specifications for general office space and contain built in shelving on one wall and a counter top flat surface to be used for a mail center.

9.5. EMPLOYEE RESTROOMS

Approximately 300 square feet (two each of 150 square feet within space).

Both a men's and women's restroom shall be provided for exclusive use by SSA employees. This set of restrooms shall be directly accessible from the employee area and shall conform with all handicapped accessibility standards set forth in this Solicitation. The restrooms shall also conform to the requirements set forth in the "Restrooms" paragraph in the MECHANICAL, ELECTRICAL, PLUMBING section and in the "Wall Covering: Physical Requirements" paragraph in the ARCHITECTURAL FINISHES section of this Solicitation.

9.6. RECEPTION AREA

Approximately 180 square feet

The Lessor is responsible for providing and installing the following reception room items:

A. Finishing Requirements

The reception area requires walk-off mats in entrances and lobbies. The maintenance, cleaning, replacement and storage of these mats, when not in use, is the responsibility of the lessor.

The reception area requires carpet tiles. All carpet tile shall meet specifications listed in Solicitation.

The vinyl wall covering in the reception area shall be kept in good condition and be replaces as necessary or every five (5) years, whichever comes first.

B. Literature Display Rack

Provide two wall mounted literature display racks 36" wide x 24" high with either no pocket dividers or adjustable width dividers for forms and literature (equivalent or better than Model 436-2P or Model 433P from Peter Pepper Products, Inc. 17929 S. Susana Road, Compton, CA 90224, GSA Contract No: GS-OOF-3875A).

C. Bulletin Board

Provide a wall mounted bulletin board with solid oak frame and 2 windowed doors with total dimensions of 36" high and 48" wide (equal to or better than model QRT-364 from Nationwide Office Supply, 44 Sea Cliff Avenue, Glen Cove, NY 11542) or (equal to or better than Model No. 308-RC from Claridge Company, Palatine, Illinois, telephone: (847) 991-8822).

D. Signs

Provide up to six professionally prepared signs with wording such as "No Smoking," "Take a Number And Be Seated," "Social Security Numbers," etc. Use of universally recognized symbols is encouraged. Exact wording will be provided by local management.

Wording will be either in English, Spanish or possibly another foreign language. The preferred colors for English signs are white lettering on a royal blue background. Preferred colors for Spanish signs is royal blue lettering on a white background.

Signs are to be installed on the wall or hung from the ceiling. They should be at least 12" high and 18" wide and have rounded corners. Signs should be equal to or better than Module 9.1 provided by Interface Architectural Signage, Inc., 5320 Webb Parkway, Lilburn, Georgia 30247.

E. Chair Rail

Furnish and install a chair rail, materials and finish to be consistent with area decor, on the inside walls as shown on an approved floor plan. The chair rail should be installed at a height from the floor sufficient to prevent standard chair backs from damaging the wall. Chair rail should be equal to or better than 2700 Chair Rail/Wall Guard provided by Institutional Products Corporation, 5.80W.18766 Apollo Drive, PO Box 406, Muskego, Wisconsin 53150, telephone: (414) 679-9010.

9.7. VIDEO TELECONFERENCE ROOM

Approximately 150 square feet.

A. Sound

The ambient noise from mechanical equipment shall not exceed noise criteria (NC) 35 in accordance with the ASHRAE Handbook in offices and conference rooms. All partitioning surrounding the video teleconference room shall have a sound transmission coefficient (STC) rating of 45. The wall surface color shall be light blue/gray flat. All doors shall have gaskets and sweeps. Ceilings shall have a noise reduction coefficient (NRC) of not less than 0.55 in accordance with ASTM C-423. All duct penetrations into the room shall be baffled so as not to compromise the STC or ambient noise requirements. Low velocity systems are necessary to minimize equipment and system generated noise.

B. Electrical, Lighting and Telephone Requirements

Electrical

Special duplex outlets (not to exceed three) on dedicated circuits for video teleconferencing (VTC) equipment will be required. For the VTC equipment within the room, at a minimum, there shall be one duplex receptacle. The duplex receptacles should be 20 amps, 125 volts. It shall be located within three feet of the VTC equipment, on the short wall of the room. It shall be wired to a dedicated 20 amp, one pole circuit breaker. There shall be a similar circuit provided for the Codex unit, wherever it is installed. Dedicated circuits shall be located at the convenience panel.

Telephone

A separate telephone line (outlet) shall be provided within the Video Teleconferencing Room.

Lighting

Lighting in the room shall be 2'x2' 9 cell parabolic fluorescent light fixtures with 3" deep louvers or 2'x4' 18 cell parabolic fluorescent light fixtures with 3" deep louvers to provide a minimum uniform lighting level of 60 foot candles. Downlights shall be HALO low voltage H-1499T (or equivalent) recessed incandescent with reflector H-1421C (or equivalent) located on four foot intervals above the conference table. Participants shall have the ability to adjust the lighting level in these specific areas to 100 foot candles, capable of dimming to 80 foot candles. There shall be parabolic louvers/lenses, designed to minimize wall shadows. These lights will illuminate the entire room. Lamps shall be non-energy saving type. The lamps shall be located in such a configuration and pattern so as not to produce glare on the monitor as seen from the conference table and still provide adequate light on the conference table and participants. For video teleconferencing purposes, the other areas of the room, i.e. behind the conference table and over the equipment and monitor, would be best at the 60 foot-candle range.

There shall be dimmable downlights or wallwashers (see above specs.) at four (4) foot intervals located at one end of the room where the white board will be installed to illuminate the writing surface.

C. Dry Marker Board

Install a 36" high dry marker board across the length of one wall of the video teleconference room. The dry marker board shall be a Greensteel or equivalent board which is 3/4" particle board with 22 gauge face sheet and porcelain writing surface. Butt joints are to be splined. Color DMB-7 (white) with black plastic Tee-edge molding (#551T). The board must have an eraser shelf.

D. Heating Ventilating and Air Conditioning (HVAC)

Separately zoned heating, ventilating, and air-conditioning meeting the standards delineated in this solicitation and conforming with ASRAE must be provided. All duct penetrations shall be baffled so as not to compromise the STC requirement for this room. Low velocity systems are necessary to minimize equipment and system generated noise. It is preferable to locate the Codec unit outside of the room. Wherever the Codec unit is to be installed, the heat gain generated by it should be accounted for in the HVAC requirement calculations.

When the Codec unit (provided by the Government) is installed, it will require the following environmental conditions to ensure proper operation: Operating Temperature shall range between 50 to 104 degrees F (10 to 40 C); Storage Temperature shall range between 32 to 158 degrees F (0 to 70 C); and, Relative Humidity shall range between 15 to 95% non-condensing). The typical heat dissipation of a Codec unit is 1,700 BTU's per hour.

Temperatures within the room must be maintained at normal comfort levels specified in this solicitation. Consideration must be given to the output of the Codec unit, and heat dissipation of the occupants of the room. (A person at rest emits 450 to 500 BTU's of heat. The room will hold between 10 to 15 people at any one time for training sessions and/or conferences.)

E. If required, the Government shall have the option of installing a satellite dish on the roof. The Lessor's approval, which shall not be unreasonably withheld shall be obtained in advance of exercising this option. All site preparation, installation and maintenance shall be at the expense of the Government. There shall be no rental increase if this option is exercised by the Government and approved by the Lessor.

10.0 SERVICES, UTILITIES, MAINTENANCE

10.1. SERVICES, UTILITIES, MAINTENANCE: GENERAL

Services, utilities, and maintenance shall be provided as part of the rental consideration. The Lessor must have a building superintendent or a locally designated representative available to promptly correct deficiencies.

10.2. NORMAL HOURS

Services, utilities, and maintenance will be provided daily, extending 7:00 a.m. until 6:00 p.m. except Saturdays, Sundays, and Federal holidays.

10.3. OVERTIME USAGE (JAN 1997)

(a) The Government shall have access to the leased space at all times without additional payment, including the use, during other than normal hours, of necessary services and utilities such as elevators, toilets, lights, and electric power.

(b) Reimbursement to the Lessor for overtime heating or cooling will be at the hourly rate established in the contract.

10.4. OVERTIME USAGE (JAN 1997)

(a) The Government shall have access to the leased space at all times without additional payment, including the use, during other than normal hours, of necessary services and utilities such as elevators, toilets, lights, and electric power.

(b) If heating or cooling is required on an overtime basis, such services will be ordered orally or in writing by the Contracting Officer or Buildings Manager. When ordered, services shall be provided at the hourly rate established in the contract. Costs for personal *services shall only be included as authorized by the Government.*

(c) When the cost of service is $2,000 or less, the service may be ordered orally. An invoice shall be submitted to the official placing the order for certification and payment. Orders for services costing more than $2,000 will be placed using a Form 300, Order for Supplies or Services. The clauses entitled "GSAR 552.232-71 Prompt Payment" and "GSAR 552.232-72 Invoice Requirements (Variation)" apply to all orders for overtime services.

(d) All orders are subject to the terms and conditions of this lease. In the event of a conflict between an order and this lease, the lease shall control.

10.5. UTILITIES

The Lessor shall ensure that utilities necessary for operation are provided and all associated costs are included as a part of the established rental rate.

10.6. UTILITIES: SEPARATE FROM RENTAL (JAN 1997)

(a) The Offeror must specify which utilities, if any, are excluded from the rental consideration. If any such utilities are excluded, the Offeror must obtain a statement from a registered professional engineer stating that all heating, ventilation, air conditioning, plumbing, and other energy intensive building systems can operate under the control conditions stated in this SFO. The statement must also identify all building systems which do not conform to the system performance values, including the "recommended" or "suggested" values of ASHRAE Standard 90.1, Energy Efficient Design of New Buildings Except Low-Rise Residential Buildings, or more restrictive local/state codes.

(b) The Lessor shall provide separate meters for utilities to be paid for by the Government. The Lessor shall furnish in writing to the Contracting Officer, prior to occupancy by the Government, a record of the meter numbers and verification that the meters measure Government usage only. Proration is not permissible. In addition, an automatic control system shall be provided to assure compliance with heating and air conditioning requirements (see "Mechanical, Electrical, Plumbing" section of this solicitation).

10.7. JANITORIAL SERVICES (JAN 1997)

The Lessor shall provide janitorial services for the leased space, public areas, entrances, and all other common areas and provide replacement of supplies.

10.8. JANITORIAL SERVICES (JAN 1997)

Cleaning and all routine office maintenance activities must be conducted during routine business hours of 8:00 a.m. to 4:30 p.m.

The Lessor shall maintain the leased premises, including outside areas in a clean condition and shall provide supplies and equipment. The following schedule describes the level of services intended. Performance will be based on the Contracting Officer's evaluation of results, not the frequency or method of performance.

Lessor shall provide an outside dumpster, sufficient in site to handle office trash between pick-ups. The size of the dumpster to be approved by the Contracting Officer.

DAILY:
Empty trash receptacles and clean ashtrays. Sweep entrances, lobbies and corridors. Spot sweep floors and spot vacuum carpets. Clean drinking fountains. Sweep and damp mop or scrub toilet rooms. Clean all toilet fixtures and replenish toilet supplies. Dispose of all trash and garbage generated in or about the building. Wash inside and out or steam clean cans used for collection of food remnants from snack bars and vending machines. Dust horizontal surfaces that are readily available and visibly require dusting. Spray buff resilient floors in main corridors, entrances and lobbies, clean elevators and escalators, remove carpet stains. Police sidewalks, parking areas and driveways. Sweep loading dock areas and platforms.

THREE TIMES A WEEK:
Sweep or vacuum stairs.

WEEKLY:
Damp mop and spray buff all resilient floors in toilets and health units. Sweep sidewalks, parking areas and driveways (weather permitting).

EVERY TWO WEEKS:
Spray buff resilient floors in secondary corridors, entrance and lobbies. Damp mop and spray buff hard and resilient floors in office space.

MONTHLY:
Thoroughly dust furniture. Completely sweep and/or vacuum carpets. Sweep storage space. Spot clean all wall surfaces within 70 inches of the floor.

EVERY TWO MONTHS:
Damp wipe toilet wastepaper receptacles, stall partitions, doors, window sills and frames. Shampoo entrance and elevator carpets.

THREE TIMES A YEAR:
Dust wall surfaces within 70 inches of the floor, vertical surfaces and under surfaces. Clean metal and marble surfaces in lobbies. Wet mop or scrub garages.

TWICE A YEAR:
Wash all interior and exterior windows and other glass surfaces. Strip and apply four coats of finish to resilient floors in toilets. Strip and refinish main corridors and other heavy traffic areas.

ANNUALLY:
Wash all venetian blinds and dust 6 months from washing. Vacuum or dust all surfaces in the building of 70 inches from the floor, including light fixtures. Vacuum all drapes in place. Strip and refinish floors in offices and secondary lobbies and corridors. Shampoo carpets in corridors and lobbies. Clean balconies, ledges, courts, areaways and flat roofs.

EVERY TWO YEARS:
Shampoo carpets in all offices and other non-public areas.

EVERY FIVE YEARS:
Dry clean or wash (as appropriate) all drapes.

AS REQUIRED:
Properly maintain plants and lawns, remove snow and ice from entrances, exterior walks and parking lots of the building. Provide initial supply, installation and replacement of light bulbs, tubes, ballasts and starters. Replace worn floor coverings (this includes moving and return of furniture). Control pests as appropriate, using Integrated Pest Management techniques.

10.9. SCHEDULE OF PERIODIC SERVICES

Within 60 days after occupancy by the Government, the Lessor shall provide the Contracting Officer with a detailed written schedule of all periodic services and maintenance to be performed other than daily, weekly or monthly.

10.10. MAINTENANCE AND TESTING OF SYSTEMS (OCT 1996)

(a) The Lessor is responsible for the total maintenance and repair of the leased premises. Such maintenance and repairs include site and private access roads. All equipment and systems shall be maintained to provide reliable, energy efficient service without unusual interruption, disturbing noises, exposure to fire or safety hazards, uncomfortable drafts, excessive air velocities, or unusual emissions of dirt. The Lessor's maintenance responsibility includes initial supply and replacement of all supplies, materials, and equipment necessary for such maintenance. Maintenance, testing, and inspection of appropriate equipment and systems must be done in accordance with applicable codes, and inspection certificates must be displayed as appropriate. Copies of all records in this regard shall be forwarded to the Field Office Manager or a designated representative.

(b) Without any additional charge, the Government reserves the right to require documentation of proper operations or testing prior to occupancy of such systems as fire alarm, sprinkler, emergency generator, etc. to ensure proper operation. These tests shall be witnessed by a representative of the Contracting Officer.

10.11. SECURITY

The Lessor shall provide a level of security which reasonably deters unauthorized entry to the space leased during non-duty hours and deters loitering or disruptive acts in and around the space leased during duty hours.

10.12. SECURITY: ADDITIONAL REQUIREMENTS

The Government reserves the right to require the Lessor to submit completed fingerprint charts and personal history statements for each employee of the Lessor as well as employees of the Lessor's contractor's or subcontractors who will provide building operating services of a continuing nature for the property in which the leased space is located. The Government may also require this information for employees of the Lessor, his contractors, or subcontractors who will be engaged to perform alterations or emergency repairs for the property.

If required, the Contracting Officer will furnish the Lessor with form FD-258, "Fingerprint Chart" and Form 176, "Statement of Personal History" to be completed for each employee and returned by the Lessor to the Contracting Officer or his designated representative within 10 working days from the date of the written request to do so. Based on the information furnished, the Government will conduct security checks of the employees. The Contracting Officer will advise the Lessor in writing if an employee is found to be unsuitable or unfit for his assigned duties. Effective immediately, such an employee cannot work or be assigned to work on the property in which the leased space is located. The Lessor will be required to provide the same data within 10 working days from the addition of new employee(s) to the work force. In the event the Lessor's contractor/subcontractor is subsequently replaced, the new contractor/subcontractor is not required to submit another set of these forms for employees who were cleared through this process while employed by the former contractor/subcontractor. The Contracting Officer may require the Lessor to submit Form FD-258 and Form 176 for every employee covered by this clause on a 3-year basis.

10.13. BUILDING OPERATING PLAN

If the cost of utilities is not included as part of the rental consideration, Offerors shall submit a building operating plan with the offer. Such plan shall include a schedule of start-up and shutdown times for operation of each building system, such as lighting, heating, cooling, ventilation, and plumbing which is necessary for the operation of the building. Such plan shall be in operation on the effective date of the lease.

10.14. LANDSCAPE MAINTENANCE

Performance will be based on the Contracting Officer's evaluation of results and not the frequency or the method of performance. Landscape maintenance is to be performed during the growing season on a weekly cycle and will consist of watering, mowing, and policing area to keep it free of debris. Pruning and fertilization are to be done on an as needed basis. In addition, dead or dying plants are to be replaced promptly.

11.0 SAFETY AND ENVIRONMENTAL MANAGEMENT

11.1. OCCUPANCY PERMIT (OCT 1996)

The Lessor shall provide a valid Occupancy Permit for the intended use of the Government and shall maintain and operate the building in conformance with current local codes and ordinances. If the local jurisdiction does not issue occupancy permits, Offerors should consult the contracting officer to determine if other documentation may be needed.

11.2. FIRE AND LIFE SAFETY (OCT 1996)

(a) Below-grade space to be occupied by Government and all areas in a building referred to as "hazardous areas" in National Fire Protection Association Standard 101, known as the "Life Safety Code," or any successor standard thereto, must be protected by an automatic sprinkler system or an equivalent level of safety.

(b) If offered space is 3 stories or more above grade, the Lessor shall provide written documentation that the building meets egress and fire alarm requirements as established by NFPA Standard No. 101 or equivalent. However, if 1) offered space is 5 stories or less above grade, 2) the total Government leased space in the building (all leases combined) will be less than 35,000 square feet, and 3) the building is sprinklered, this documentation is not required.

(c) If offered space is 6 stories or more above grade, additional fire and life safety requirements may apply. Therefore, the offeror must advise GSA in its offer whether or not the offered space, or any part thereof, is on or above the sixth floor of the offered building.

11.3. PORTABLE FIRE EXTINGUISHERS (OCT 1999)

Portable type fire extinguishers meetings requirements of NFPA Standard No. 10 shall be provided and maintained by the Lessor. Initial and replacement charges for fire extinguishers shall be provided by the Lessor. Inspection (quick check) and maintenance (thorough check) or these extinguishers shall be done in accordance with NFPA standard No. 10. A Carbon Dioxide fire extinguisher is required in the ADP room.

11.4. SPRINKLER SYSTEM (OCT 1996)

(a) If any portion of the offered space is on or above the 6th floor, and lease of the offered space will result, either individually or in combination with other Government leases in the offered building, in the Government leasing more than 35,000 BOMA Usable Square Feet of space in the offered building, then the entire building must be protected by an automatic sprinkler system or an equivalent level of safety.

(b) If an offeror proposes to satisfy any requirement of this clause by providing an equivalent level of safety, the offeror must submit, for Government review and approval, a fire protection engineering analysis, performed by a qualified fire protection engineer, demonstrating that an equivalent level of safety for the offered building exists. Offerors should contact the Contracting Officer for further information regarding Government review and approval of "equivalent level of safety" analyses. (See 41 CFR 101-6.6 for guidance on conducting an equivalent level of safety analysis.)

(c) Definition: "Equivalent level of safety" means an alternative design or system (which may include automatic sprinkler systems), based upon fire protection engineering analysis, which achieves a level of safety equal to or greater than that provided by automatic sprinkler systems.

11.5. MANUAL FIRE ALARM SYSTEMS (OCT 1996)

Manual fire alarm systems shall be provided in accordance with NFPA Standard 101 (current as of the date of this solicitation). Systems shall be maintained and tested by the Lessor in accordance with NFPA Standard 72. The fire alarm system wiring and equipment must be electrically supervised and automatically notify the local fire department (NFPA Standard No. 72) or approved central station. Emergency power must be provided in accordance with NFPA Standards No. 70 and 72.

11.6. OSHA REQUIREMENTS (OCT 1996)

The Lessor shall maintain buildings and space in a safe and healthful condition according to the Occupational Safety and Health Administration (OSHA) standards.

11.7. ASBESTOS (OCT 1996)

The leased space shall be free of all asbestos containing materials, except undamaged asbestos flooring in the space or undamaged boiler or pipe insulation outside the space, in which case an asbestos management program conforming to Environmental Protection Agency guidance shall be implemented.

11.8. ASBESTOS (OCT 1996)

(a) Offers are requested for space with no asbestos-containing materials (ACM), or with ACM in a stable, solid matrix (e.g., asbestos flooring or asbestos cement panels) which is not damaged or subject to damage by routine operations. For purposes of this "Asbestos" paragraph, "space" includes the space offered for lease, common building areas and ventilation systems and zones serving the space offered, and the area above suspended ceilings and engineering space in the same ventilation zone as the space offered. If no offers are received for such space, the Government may consider space with thermal system insulation ACM (e.g., wrapped pipe or boiler lagging) which is not damaged or subject to damage by routine operations.

(b) Definition. ACM is defined as any materials with a concentration of greater than 1 percent by dry weight of asbestos.

(c) Space with ACM of any type or condition may be upgraded by the offeror to meet the conditions described in subparagraph (a) by abatement (removal, enclosure, encapsulation, or repair) of ACM not meeting those conditions. If an offer involving abatement of ACM is accepted by the Government, the Lessor shall, prior to occupancy, successfully complete the abatement in accordance with Occupational Safety and Health Administration (OSHA), Environmental Protection Agency (EPA), Department of Transportation (DOT), State, and local regulations and guidance.

(e) Management plan. If space is offered which contains ACM, the offeror must submit an asbestos-related management plan for acceptance by the Government prior to lease award. This plan must conform to EPA guidance, be implemented prior to occupancy, and be revised promptly when conditions affecting the plan change. If asbestos abatement work is to be performed in the space after occupancy, the Lessor shall submit to the Contracting Officer the occupant safety plan and a description of the methods of abatement and reoccupancy clearance, in accordance with OSHA, EPA, DOT, State, and local regulations and guidance, at least 4 weeks prior to the abatement work.

11.9. INDOOR AIR QUALITY (OCT 1996)

(a) The Lessor shall control contaminants at the source and/or operate the space in such a manner that the GSA indicator levels for carbon monoxide (CO), carbon dioxide (CO_2), and formaldehyde (HCHO) are not exceeded. The indicator levels for office areas shall be: CO - 9 parts per million (ppm) time-weighted average (TWA - 8-hour sample); CO_2 - 1000 ppm (TWA); formaldehyde - 0.1 ppm (TWA).

(b) The Lessor shall make a reasonable attempt to apply insecticides (except traps), paints, glues, adhesives, and heating, ventilating and air conditioning (HVAC) system cleaning compounds with highly volatile or irritating organic compounds, outside of working hours. The Lessor shall provide advance notice to the tenant before applying noxious chemicals in occupied spaces, and adequate ventilation in those spaces during working hours during and after application.

(c) The Lessor shall, at all times, supply adequate ventilation to the leased premises with air having contaminants below OSHA or EPA action levels and permissible exposure limits, and without noxious odors or dusts. The Lessor shall conduct HVAC system balancing after all HVAC system alterations; and make a reasonable attempt to schedule major construction outside of office hours.

(d) The Lessor shall promptly investigate indoor air quality (IAQ) complaints and shall implement controls, including alteration of building operating procedures (e.g., adjusting air intakes, adjusting air distribution, cleaning and maintaining HVAC systems, etc.), to address such complaints.

(e) The Government reserves the right to conduct independent IAQ assessments and detailed studies in space it occupies, as well as in space serving the Government-leased space (e.g., common use areas, mechanical rooms, HVAC systems, etc.). The Lessor shall assist the Government in its assessments and detailed studies by making available information on building operations and Lessor activities, and providing access to space for assessment and testing, if required, and implement corrective measures required by the Contracting Officer.

11.10. RADON IN AIR (OCT 1996)

If space planned for occupancy by the Government is on the second floor above grade or lower, the Lessor shall, prior to occupancy, test the leased space for 2-3 days using charcoal canisters or Electret Ion Chambers to ensure radon in air levels are below the Environmental Protection Agency's action concentration of 4 picoCuries/liter. After the initial testing, a follow-up test for a minimum of 90 days using Alpha Track Detectors or Electret Ion Chambers must be completed.

11.11. RADON IN AIR (OCT 1996)

(a) The radon concentration in the air of space leased to the Government shall be less than the Environmental Protection Agency (EPA) action concentration for homes of 4 picoCuries per liter (pCi/L), herein called the "EPA action concentration."

(b) Initial testing:

(1) The Lessor shall test for radon that portion of space planned for occupancy by the Government in ground contact or closest to the ground up to and including the second floor above grade (space on the third or higher floor above grade need not be measured), report the results to the Contracting Officer upon award, and promptly carry out a corrective action program for any radon concentration which equals or exceeds the EPA action level.

(2) Testing sequence: The Lessor shall measure radon by the Standard Test in subparagraph (d)(1), completing the Test not later than 150 days after award, unless the Contracting Officer decides that there is not enough time to complete the Test before Government occupancy, in which case the Lessor shall perform the Short Test in subparagraph (d)(2).

(3) If the space offered for lease to the Government is in a building under construction or proposed for construction, the Lessor shall, if possible, perform the Standard Test during buildout before Government occupancy of the space. If the Contracting Officer decides that it is not possible to complete the Standard Test before occupancy, the Lessor shall complete the Short Test before occupancy, and the Standard Test not later than 150 days after occupancy.

(c) Corrective action program:

(1) Program initiation and procedures:

(i) If the Government or the Lessor detects radon at or above the EPA action level at any time before Government occupancy, the Lessor shall carry out a corrective action program which reduces the concentration to below the EPA action level before Government occupancy.

(ii) If the Government or the Lessor detects a radon concentration at or above the EPA action level at any time after Government occupancy, the Lessor shall promptly carry out a corrective action program which reduces the concentration to below the EPA action level.

(iii) If the Government or the Lessor detects a radon concentration at or above the EPA residential occupancy concentration of 200 pCi/L at any time after Government occupancy, the Lessor shall promptly restrict the use of the affected area, and provide comparable temporary space for the tenants, as agreed to by the Government, until the Lessor carries out a prompt corrective action program which reduces the concentration to below the EPA action level and certifies the space for reoccupancy.

(iv) The Lessor shall provide the Government with prior written notice of any proposed corrective action or tenant relocation. The Lessor shall promptly revise the corrective action program upon any change in building condition or operation which would affect the program or increase the radon concentration to or above the EPA action level.

(2) The Lessor shall perform the Standard Test in subparagraph (d)(1) to assess the effectiveness of a corrective action program. The Lessor may also perform the Short Test in subparagraph (d)(2) to determine whether the space may be occupied, but shall begin the Standard Test concurrently with the Short Test.

(3) All measures to accommodate delay of occupancy, corrective action, tenant relocation, tenant reoccupancy, or follow-up measurement, shall be provided by the Lessor at no additional cost to the Government.

(4) If the Lessor fails to exercise due diligence, or is otherwise unable to reduce the radon concentration promptly to below the EPA action level, the Government may implement a corrective action program and deduct its costs from the rent.

(d) Testing procedures:

(1) Standard Test: Place Alpha Track Detectors or Electret Ion Chambers throughout the required area for 91 or more days so that each covers no more than 2,000 square feet of usable space. Use only devices listed in the EPA Radon Measurement Proficiency (RMP) Program Application Device Checklists. Use a laboratory rated proficient in the EPA Program to analyze the devices. Submit the results and supporting data (sample location, device type, duration, radon measurements, laboratory proficiency certification number, and the signature of a responsible laboratory official) within 30 days after the measurement.

(2) Short Test: Place Alpha Track Detectors for at least 14 days, or Electret Ion Chambers or charcoal canisters for 2 to 3 days, throughout the required area so that each covers no more than 2,000 square feet of usable space, starting not later than 7 days after award. Use only devices listed in the EPA RMP Program Application Device Checklists. Use a laboratory rated proficient in the EPA Program to analyze the devices, and submit the results and supporting data within 30 days after the measurement. In addition, complete the Standard Test not later than 150 days after Government occupancy.

11.12. RADON IN WATER (SEP 1991)

(a) Two water samples constituting a sampling pair shall be taken from the same location for quality control. They shall be obtained inside the building and as near the non-public water source as is practical, in accordance with EPA's "Radon In Water Sampling Program Manual." Analysis of water samples for radon must be performed by a laboratory that uses the analytical procedures as described in EPA's "Two Test Procedures For Radon In Drinking Water."

(b) The Lessor shall perform the necessary radon testing and submit a certification to the Contracting Officer before the Government occupies the space.

(c) If the EPA action level is reached or exceeded, the Lessor shall institute abatement methods, such as aeration, which reduce the radon to below the EPA action level prior to occupancy by the Government, and are promptly revised when building conditions which would or do affect the program change.

11.13. HAZARDOUS MATERIALS (OCT 1996)

The leased space shall be free of hazardous materials according to applicable Federal, State, and local environmental regulations.

11.14. RECYCLING (OCT 1996)

Where State and/or local law, code or ordinance require recycling programs for the space to be provided pursuant to this solicitation, the successful offeror shall comply with such State and/or local law, code or ordinance in accordance with the paragraph of the General Clauses entitled "Compliance with Applicable Law." In all other cases, the successful offeror shall establish a recycling program in the leased space where local markets for recovered materials exist. The Lessor agrees, upon request, to provide the Government with additional information concerning recycling programs maintained in the building and the leased space.

12.0 ATTACHMENTS

12.1. ATTACHMENT No. 1

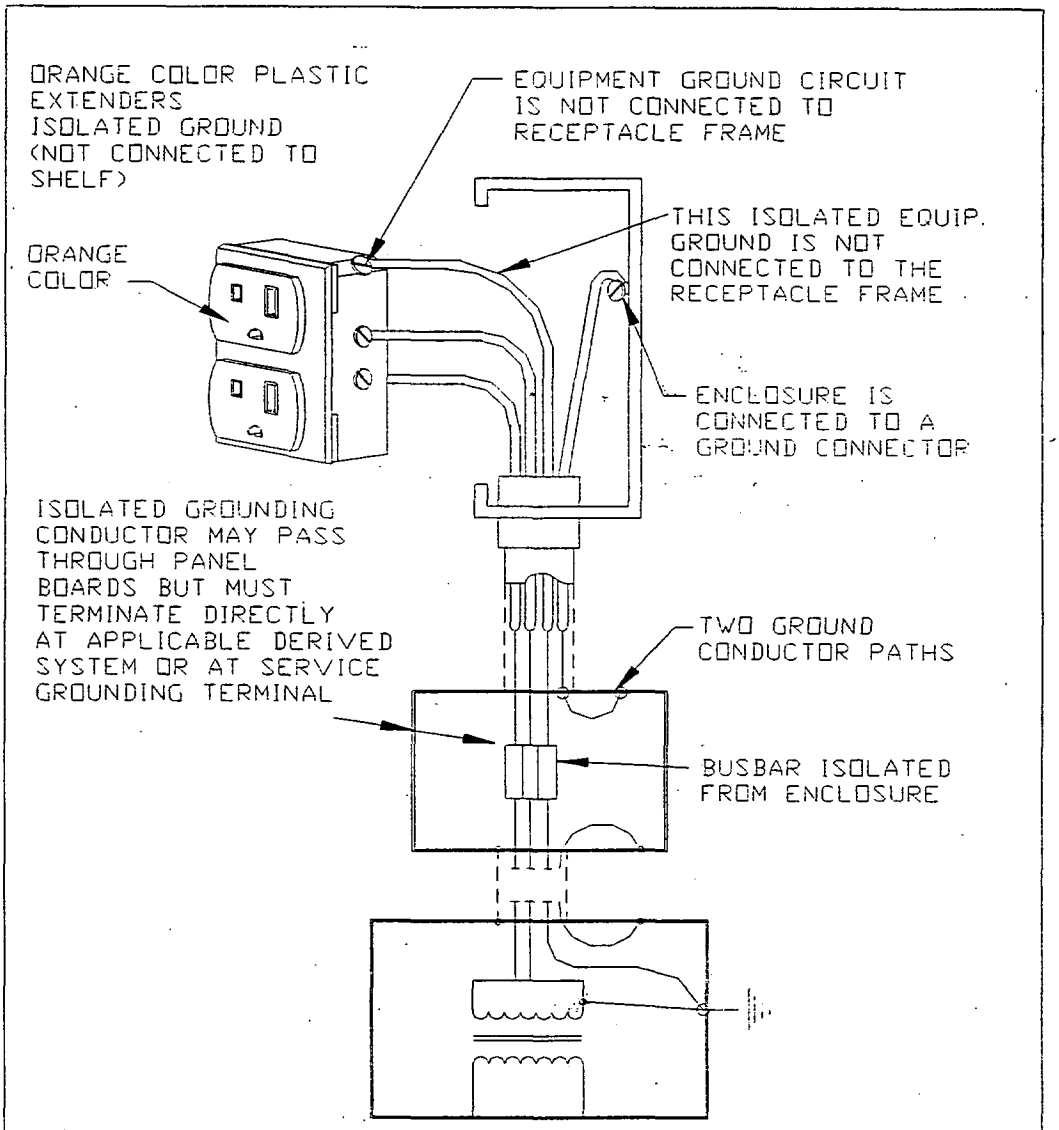

Isolated ground receptacles: When installed per National Electric Code Article 250-74, exception 4, at least two ground conductor paths are required; one for the receptacle ground pin and the other for the receptacle enclosure.

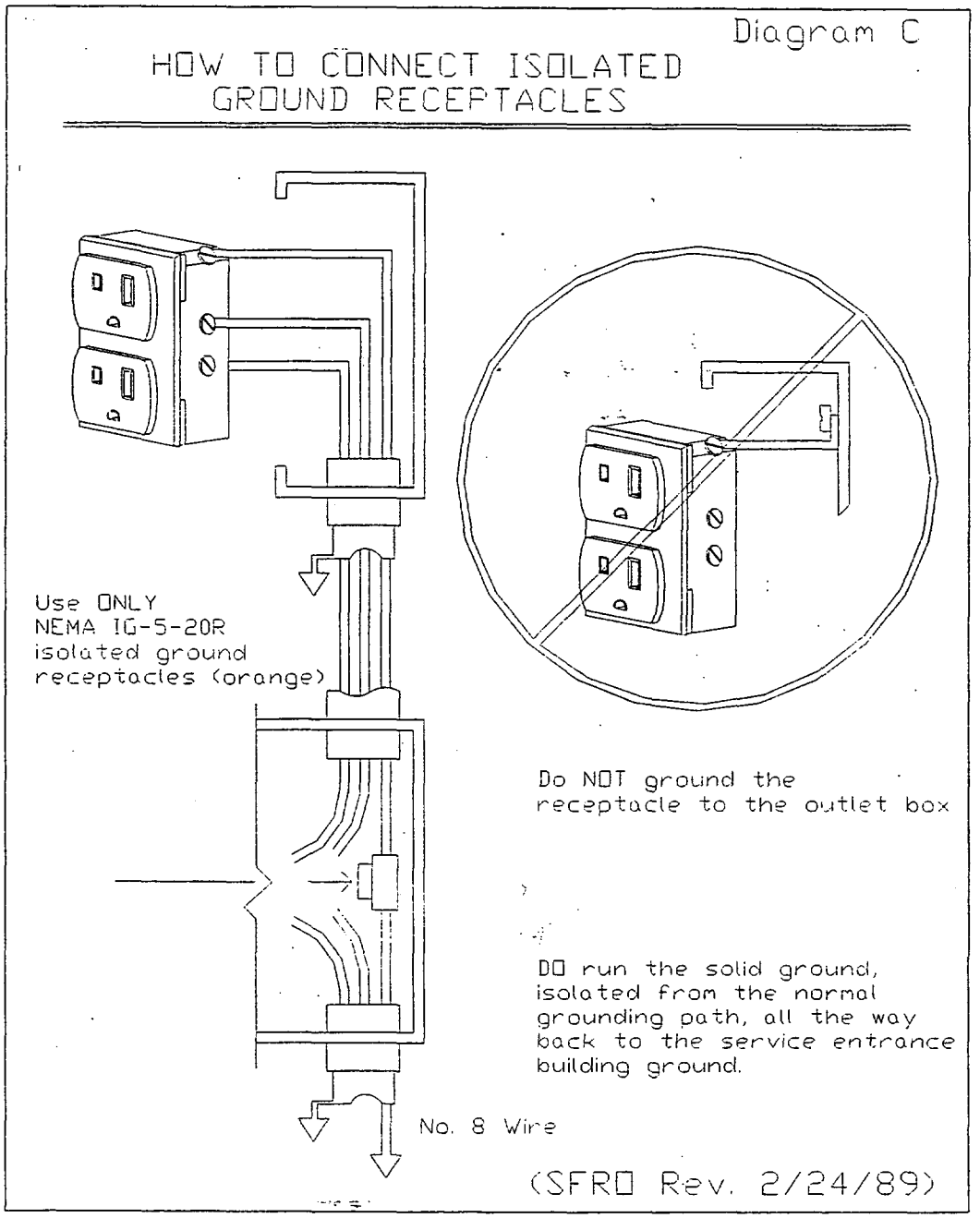

INITIALS: _____ & _____
LESSOR GOV'T

Diagram B

HOW TO WIRE RECEPTACLES

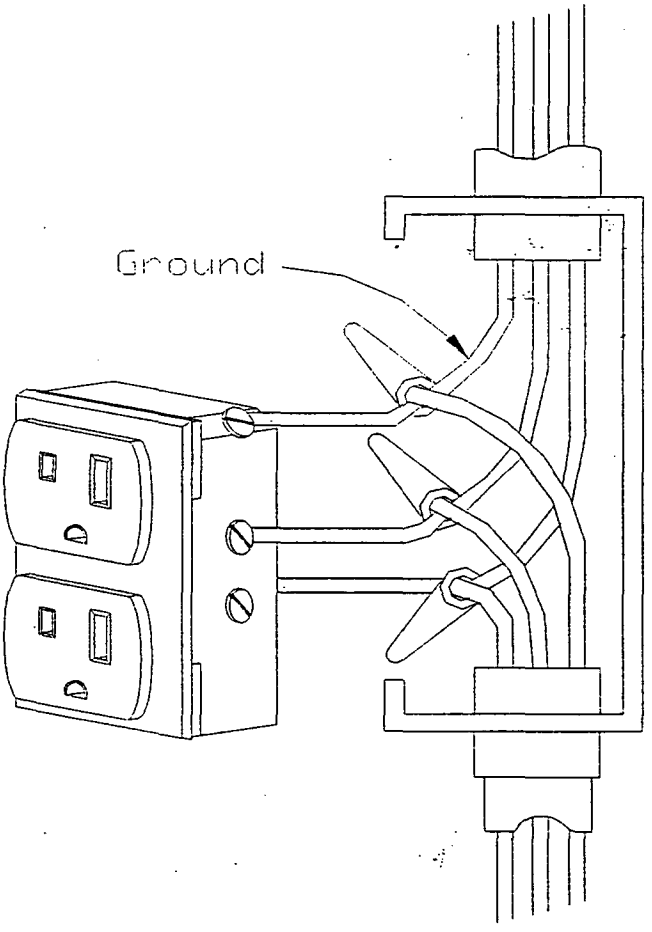

Each wire in the outlet box, inluding the ground wire, must be "pigtailed" and twisted prior to the application of a UL listed spring pressure connector, leaving a single wire connected to each lug of the receptacle.

(SFRO Rev. 2/21/89)

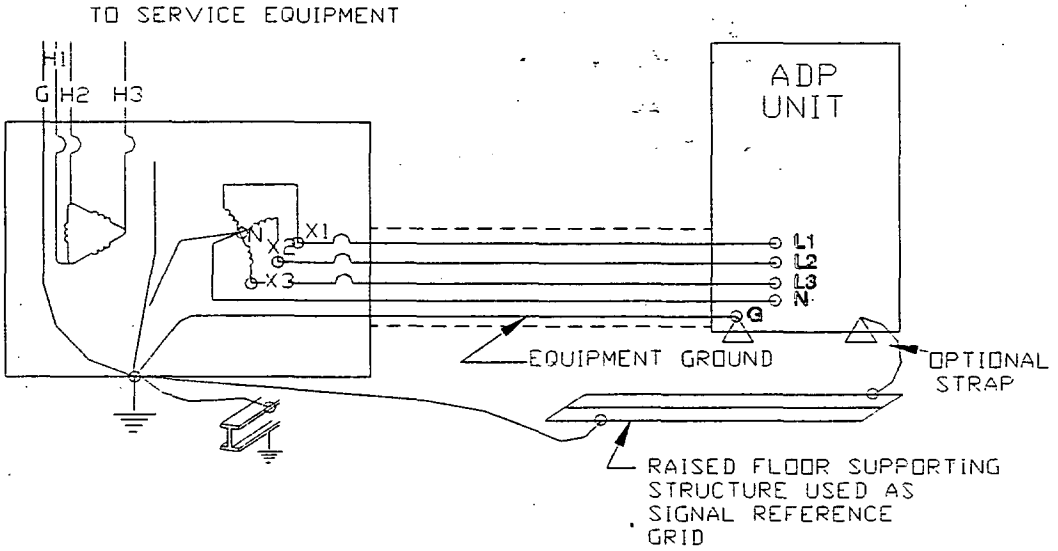

Grounding ADP units to a grounded reference grid with optional ground straps can supplement but must never replace equipment ground conductors. Optional ground straps to a suitable signal reference grid are recommended to reduce impulse noise currents in ADP system ground conductors.

12.5. ATTACHMENT No. 5

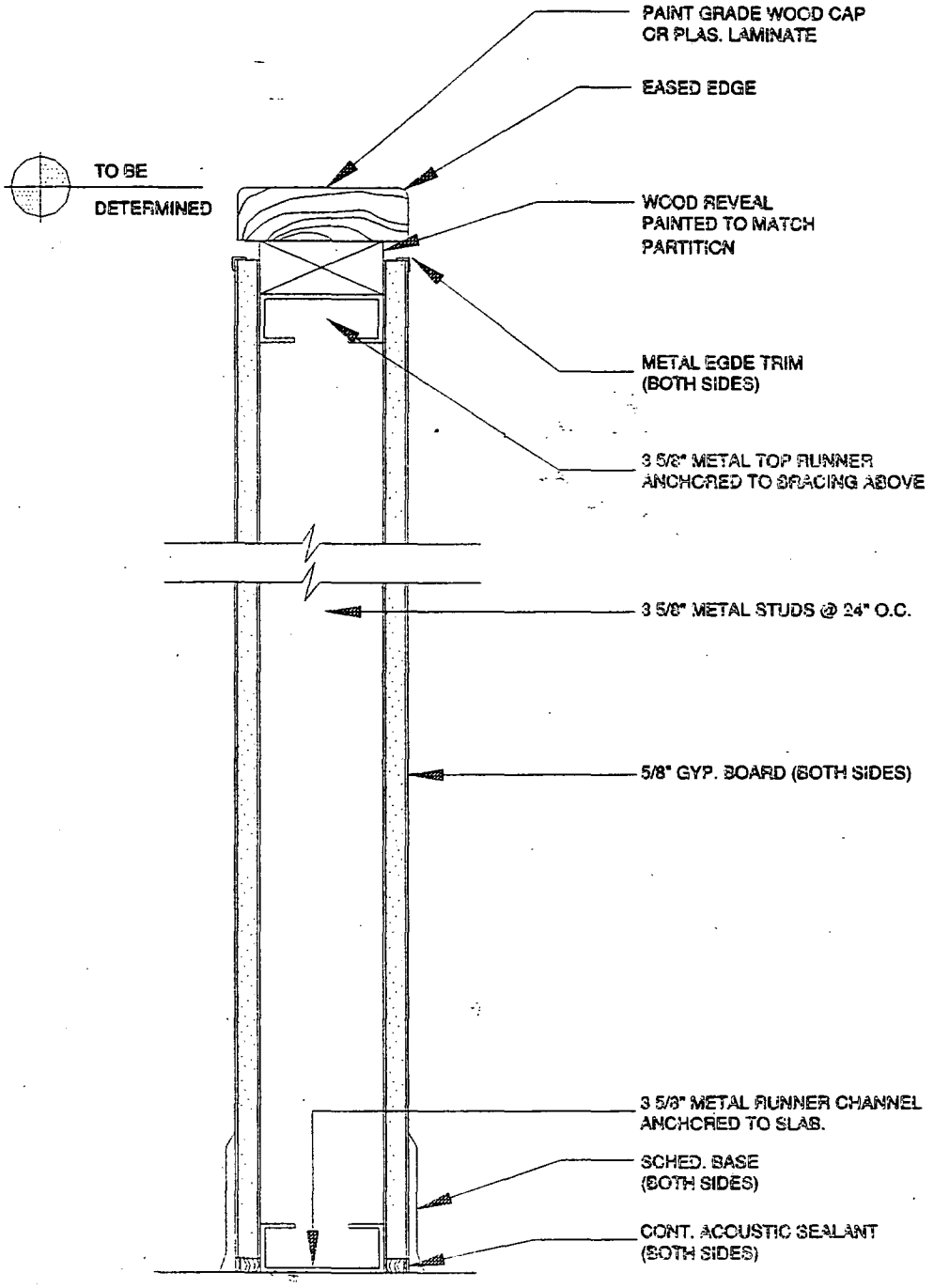

04 TYPE "B" PARTITION

3"=1'-0"

12.6. ATTACHMENT No. 6

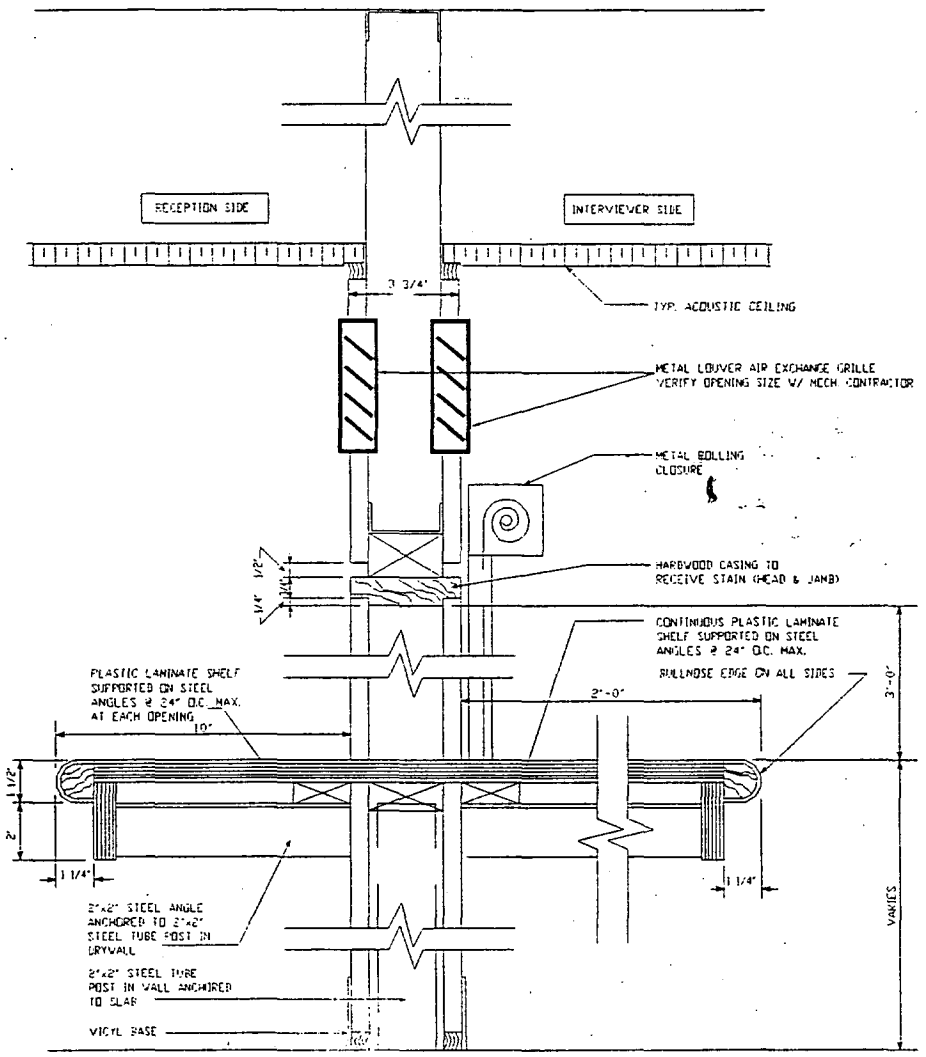

CASED INTERVIEW OPENING-RECEPTION

SCALE: 3"=1'-0"

12.7. ATTACHMENT No. 7

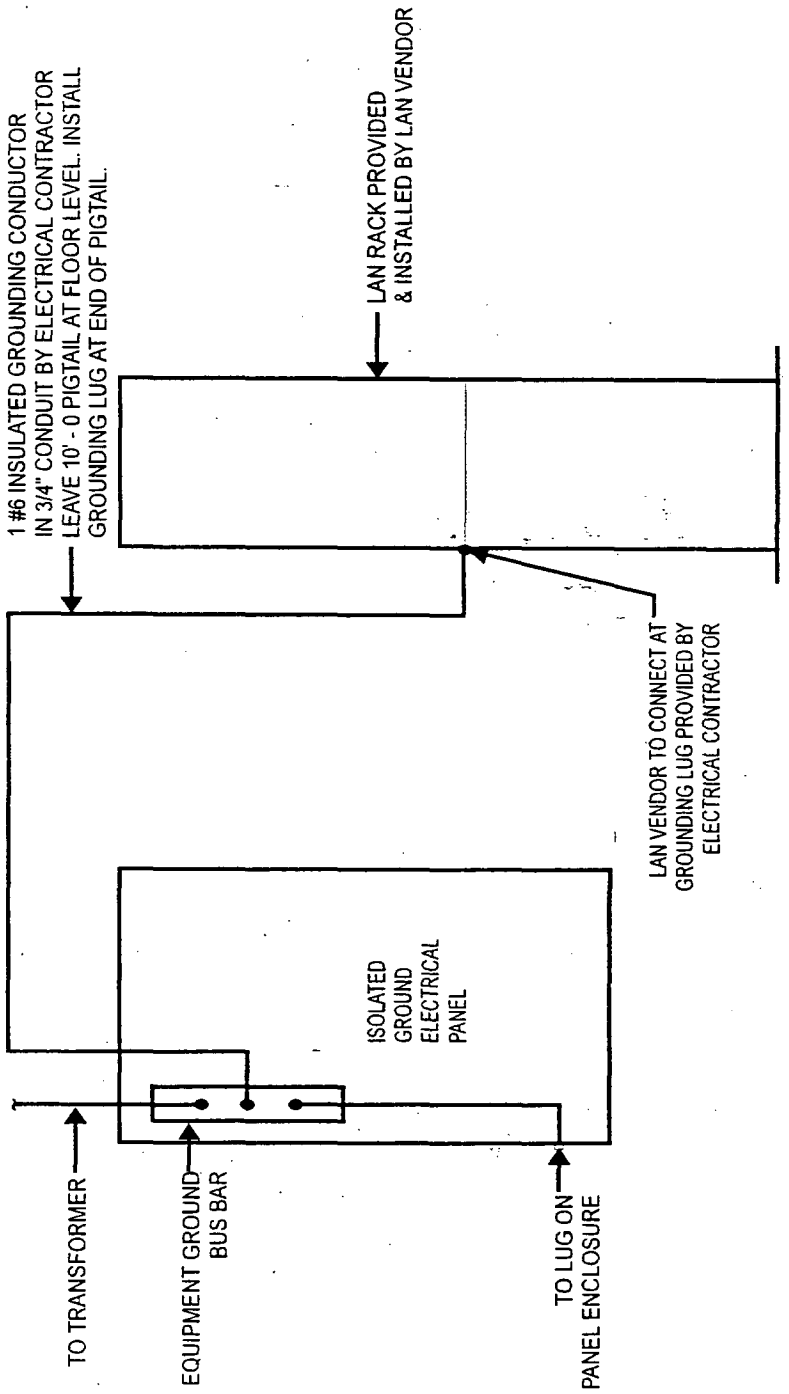

IWS - LAN RACK GROUNDING DETAIL

INITIALS: _____ & _____
LESSOR GOV'T

12.8. ATTACHMENT No. 8

CABLE IDENTIFICATION

All cables shall be labeled with eleven numeric digits at both ends of the cable and on the outlet plate according to the eleven digits of the cable number.

All communication outlets at the workstation shall be labeled with the eleven digit cable number in the following manner:

RR = Regional Code

BB = Building Code

FF = Building Floor

WW = Wiring Center

XXX = Device Number

An example of this labeling scheme is demonstrated below:

09-5602-01001

Region = 09
Building = 56
Floor = 02
Wiring Closet/Center = 01 Device Number = 001

INITIALS: _____ & _____
LESSOR GOV'T

12.9. *ATTACHMENT No. 9*

RADON-RESISTANT TECHNIQUES FOR NEW BUILDING CONSTTRUCTION

The techniques described below have proven to be effective in reducing the entry of radon gas into a building and preparing the building for easy installation of an active radon control system. This approach utilizes barriers to radon entry and stack effect reduction techniques to reduce the rate of radon entry, plus the installation of a PVC pipe running from beneath the slab to the roof where it dissipates. All new construction should be tested to ensure that the passive system has lowered the radon level below 4 pC/l. If the level is above 4 pc/l, the system can be modified by the addition of a fan and warning device.

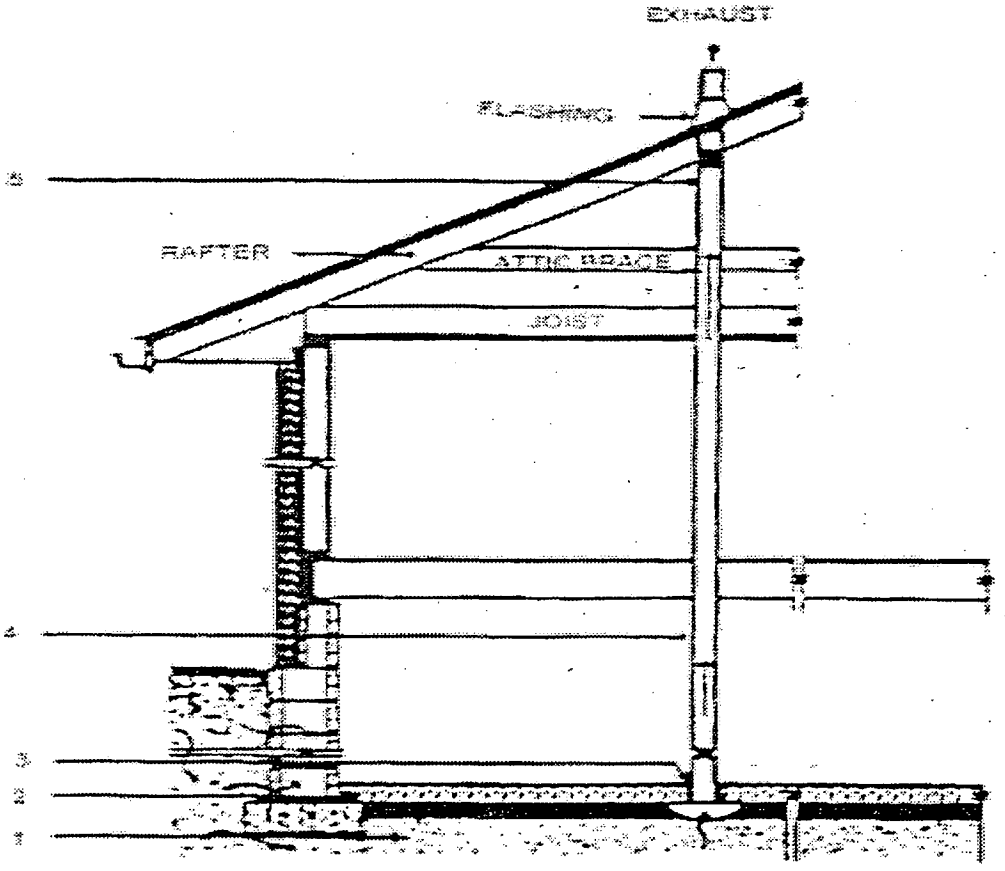

1. Layer of gas permeable material, such as clean gravel, 4" thick.

2. Continuous layer of polyethylene sheeting under entire slab, overlapped at seams to serve as a soil-gas-moisture barrier.

3. Sealing and caulking of any openings through the slab and foundation walls, such as drains, sumps, utility penetrations, and floor-wall joints to retard soil-gas-moisture entry.

4. Installation of 3"—4" PVC pipe that extends from the gas permeable layer to the roof.

5.Roughed-in wiring for later installation of fan and system-failure warning device, if radon shows elevated levels.

13.0 REVISIONS (July 25, 2000) to this SFO

The following paragraphs contain both new requirements and revisions to existing requirements that appear elsewhere in this SFO, and are made a part of this SFO. The lessor is responsible, where feasible, to meet these new and amended requirements. In the event the Lessor cannot meet the new requirements and changes to the existing requirements that are listed below, the lessor must notify the Contractor Officer and provide proof as to why the new or amended requirement(s) is not feasible and cannot be met. The Contractor Officer will determine, in his/her sole judgement, if the requirement can be waived. Any questions or conflicts that the Lessor has about the following requirements should be directed to the Contracting Officer for resolution.

SFO Section 4, General Architectural

QUALITY AND APPEARANCE OF BUILDING EXTERIOR (JUL 2000) [Modified paragraph]

The space offered should be located in a modern office building with facade of stone, marble, brick, stainless steel, aluminum or other permanent materials in good condition acceptable to the Contracting Officer. If not in a new office building, the space offered should be in a building that has undergone, or will complete by occupancy, first class restoration or adaptive reuse for office space with modern conveniences. If the restoration work is underway or proposed, then architectural plans acceptable to the Contracting Officer must be submitted as part of the offer. The building should be compatible with its surroundings. Overall the building should project a professional and aesthetically pleasing appearance including an attractive front and entrance way. The building should have energy efficient windows or glass areas consistent with the structural integrity of the building, unless not appropriate for intended use. The facade, downspouts, roof trim and window casing are to be clean and in good condition.

CONSTRUCTION WASTE MANAGEMENT (JUL 2000) [New paragraph]

(a) Recycling construction waste means providing all services necessary to furnish construction materials or wastes to organizations which will employ these materials or wastes in the production of new materials. Recycling includes required labor and equipment necessary to separate individual materials from the assemblies of which they form a part.

(b) The Offeror shall submit to the Government their proposal to dispose of or recycle construction waste. Where the small quantity of material, the extraordinarily complex nature of the waste disposal method, or prohibitive expense for recycling would represent a genuine hardship, the Government may permit alternative means of disposal. This requirement shall also apply to subsequent alterations under the lease.

(c) The Lessor will recycle the following items during both the demolition and construction phases of the project, subject to economic evaluation and feasibility:

(1) Ceiling grid and tile,
(2) Light fixtures, including proper disposal of any transformers, ballasts and fluorescent light bulbs,
(3) Duct work and HVAC equipment,
(4) Wiring and electrical equipment,
(5) Aluminum and/or steel doors and frames,
(6) Hardware,
(7) Drywall,
(8) Steel studs,
(9)) Carpet, carpet backing, and carpet padding,
(10) Wood,
(11) Insulation,
(12) Cardboard packaging,
(13) Pallets,
(14) Windows and glazing materials,
(15) All miscellaneous metals (as in steel support frames for filing equipment), and
(16) All other finish and construction materials.

(d) If any waste materials encountered during the demolition or construction phase are found to contain lead, asbestos, PCBs (such as fluorescent lamp ballasts), or other harmful substances, they are to be handled and removed in accordance with State and Federal laws and requirements concerning hazardous waste.

(e) In addition to providing "one-time" removal and recycling of large-scale demolition items such as carpeting or drywall, the Lessor will provide continuous facilities for the recycling of incidental construction waste during initial construction.

(f) Construction materials recycling records shall be maintained and accessible to the Contracting Officer. Records shall include materials recycled or landfilled, quantity, date, and identification of hazardous wastes.

EXISTING FIT-OUT, SALVAGED, OR RE-USED BUILDING MATERIAL (JUL 2000) [New paragraph]

(a) Items and material existing in the offered space or to be removed from the offered space during the demolition phase are eligible for reuse in the construction phase of the project. The reuse of items and materials is preferable to recycling them; however, items considered for reuse must be in refurbishable condition, and must meet the quality standards set forth by the Government in this SFO. In the absence of definitive quality standards, the Lessor is to ensure that the quality of the item(s) in question will meet or exceed accepted industry or trade standards for first quality commercial grade applications.

(b) Lessor shall submit a reuse plan to the Contracting Officer. The Government will not pay for existing fixtures and other Tenant Improvements accepted in place. However, the Government will reimburse the Lessor, as part of the Tenant Improvement allowance, the costs to repair or improve such fixtures or improvements identified on the reuse plan and approved by the Contracting Officer.

INDOOR AIR QUALITY DURING CONSTRUCTION (JUL 2000) [New paragraph]

(a) The Lessor shall provide to the Government Materials Safety Data Sheets (MSDS) upon request for the following products prior to their installation or use: adhesives, caulking, sealants, insulating materials, fireproofing or firestopping materials, paints, carpets, floor and wall patching or leveling materials, lubricants, clear finish for wood surfaces and janitorial cleaning products.

(b) The Contracting Officer may eliminate from consideration products with significant quantities of toxic, flammable, corrosive or carcinogenic material and products with potential for harmful chemical emissions. Materials used often or in large quantities will receive the greatest amount of review.

(c) All MSDSs must comply with OSHA requirements. The Lessor and its agents must comply with all recommended measures in the MSDSs to protect the health and safety of personnel.

(d) To the greatest extent possible, Lessor shall sequence the installation of finish materials so that materials that will be high emitters of VOCs are installed and allowed to cure before installing interior finish materials, especially soft materials that are woven, fibrous, or porous in nature, that may adsorb contaminants and release them over time.

(e) Where demolition or construction work occurs adjacent to occupied space, Lessor shall erect appropriate barriers (noise, dust, odor, etc.) and take necessary steps to minimize interference with the occupants. This includes maintaining acceptable temperature, humidity and ventilation in the occupied areas during window removal, window replacement, or similar types of work.

(f) A final flush-out period of 48 to 72 hours should be provided before occupancy. Lessor shall ventilate with 100 percent outside air at the recommended air change rate (ASHRAE Standard 62) during installation of materials and finishes. If outside air would cause unacceptable inside temperature levels, humidity levels, and/or air quality, an alternate ventilation plan may be submitted to the Contracting Officer for approval.

LANDSCAPING (JUL 2000) (Modified paragraph)

(a) Where conditions permit, the site shall be landscaped for low maintenance and water conservation with plants that are either native or well-adapted to local growing conditions.

(b) Landscape management practices shall prevent pollution by

(i) Employing practices which avoid or minimize the need for fertilizers and pesticides,
(ii) Prohibiting the use of 2,4-D and organophosphates, and
(iii) Composting/recycling all yard waste.

(c) Lessor shall use landscaping products with recycled content as required by EPA's Comprehensive Procurement Guidelines for landscaping products (*www.epa.gov/cpg*).

(d) The Contracting Officer shall approve the landscaping to be provided.

RECYCLED CONTENT PRODUCTS (COMPREHENSIVE PROCUREMENT GUIDELINES) (JUL 2000) [New paragraph]

(a) The Lessor shall comply to the extent feasible with the Resource Conservation and Recovery Act (RCRA), Section 6002, 1976. The Lessor must use recycled content products as indicated in this SFO and as designated by the U.S. Environmental Protection Agency in the Comprehensive Procurement Guideline (CPG), 40 CFR Part 247, and its accompanying Recovered Material Advisory Notice (RMAN). The CPG lists the designated recycled content products. EPA also provides recommended levels of recycled content for these products. The list of designated products, EPA's recommendations, and lists of manufacturers and suppliers of the products can be found at *www.epa.gov/cpg/products.htm*.

(b) The Offeror, if unable to comply with the CPG and RMAN list, shall submit a request for waiver for each material to the Contracting Officer with initial offers. The request for waiver shall be based on the following criteria:

(1) The cost of the recommended product is unreasonable.
(2) Inadequate competition exists.
(3) Items are not available within a reasonable period of time.
(4) Items do not meet the solicitation's performance standards.

ENVIRONMENTALLY PREFERABLE BUILDING PRODUCTS AND MATERIALS (JUL 2000) [New paragraph]

(a) The Lessor shall use environmentally preferable products and materials where economically feasible. Environmentally preferable products have a lesser or reduced effect on human health and the environment when compared to other products and services that serve the same purpose.

(b) Refer to EPA's environmentally preferable products web site, *www.epa.gov/opptintr/epp*. In general, environmentally preferable products and materials do one or more of the following -

(1) Contain recycled material, are biobased, or have other positive environmental attributes;
(2) Minimize the consumption of resources, energy, or water;
(3) Prevent the creation of solid waste, air pollution, or water pollution;
(4) Promote the use of of non-toxic substances and avoid toxic materials or processes.

FLOOR COVERING AND PERIMETERS (JUL 2000) [Modified paragraph]

(a) Floor covering shall be either resilient flooring or carpet, except as otherwise specified in this solicitation. Floor perimeters at partitions must have wood, rubber, vinyl, or carpet base. Exceptions must be approved by the Contracting Officer.

(b) OFFICE AREAS:
Prior to occupancy, carpet or carpet tiles must cover all office areas partitioned or unpartitioned, including interior hallways and conference rooms. The use of existing carpet may be approved by the Contracting Officer; however, existing carpet must be shampooed before occupancy and must meet the static buildup requirement for new carpet.

(c) SPECIALTY AREAS:
Resilient flooring is to be used in reproduction rooms, storage, file and other specialty rooms. The Offeror shall provide the Government with a minimum of 6 different color samples. The sample and color must be approved by GSA prior to installation. No substitutes may be made by the Offeror after sample selection.

(d) TOILET AND SERVICE AREAS:
Terrazzo, unglazed ceramic tile, recycled glass tile, and/or quarry tile shall be used in all toilet and service areas unless another covering is approved by the Contracting Officer.

(e) CARPET - SAMPLES:
When carpet must be newly installed or changed, the Offeror shall provide the Government with a minimum of 6 different color samples. The sample and color must be approved by GSA prior to installation. No substitutes may be made by the Offeror after sample selection.

(f) CARPET - INSTALLATION:
Carpet must be installed in accordance with manufacturing instructions to lay smoothly and evenly.

(g) CARPET - REPLACEMENT:
Carpet shall be replaced at least every 10 years during Government occupancy or any time during the lease when:

(1) Backing or underlayment is exposed.

(2) There are noticeable variations in surface color or texture.

Replacement includes moving and return of furniture.

(h) RESILIENT FLOORING - REPLACEMENT:
The flooring shall be replaced by the Lessor at no cost to the Government prior to or during Government occupancy when it has curls, upturned edges, or other noticeable variations in texture.

WOOD PRODUCTS (JUL 2000) [New paragraph]

(a) For all new installations of wood products, the lessor is encouraged to use independently certified forest products. For information on certification and certified wood products, see web sites for the Forest Stewardship Council or the Certified Forest Products Council at *www.fscus.org/* and *www.certifiedwood.org/*.

(b) New installations of wood products used under this contract should not contain wood from endangered wood species, as listed by the Convention on International Trade and Endangered Species (CITES). The list of species can be found at *www.certifiedwood.org/Resources/CITES/ CITESContent.html.*

(c) Particle board, strawboard and plywood materials shall comply with HUD Standards for VOC emissions (particleboard: 0.2 ppm of formaldehyde, plywood: 0.3 ppm of formaldehyde).

ADHESIVES AND SEALANTS (JUL 2000) [New paragraph]

All adhesives employed on this project (including, but not limited to, adhesives for carpet, carpet tile, plastic laminate, wallcoverings, wood adhesive, or sealants) shall be those with the lowest possible Volatile Organic Compound (VOC) content below 20 g/L. and which meet the requirements of the manufacturer of the products adhered or involved. The Lessor shall use adhesives and sealants with no formaldehyde or heavy metals.

INSULATION – THERMAL, ACOUSTIC, AND HVAC (JUL 2000) [New paragraph]

(a) All insulation products shall contain recovered materials as required by EPA's Comprehensive Procurement Guideline and related recycled content recommendations.

(b) No insulation installed with this project shall be material manufactured using chlorofluorocarbons (CFCs), nor shall CFCs be used in the installation of the product.

(c) All insulation containing fibrous materials exposed to air flow must be rated for that exposure or encapsulated.

(d) Insulating properties for all materials must meet or exceed applicable industry standards. Polystyrene products shall meet ASTM C578-91.

CEILINGS (JUL 2000) [Modified paragraph]

(a) Ceilings must be at least 9 feet and no more than 12 feet measured from floor to the lowest obstruction. Areas with raised flooring must maintain these ceiling height limitations above the finished raised flooring. Bulkheads and hanging or surface mounted light fixtures which impede traffic ways shall be avoided.

(b) Ceilings must have a minimum noise reduction coefficient (NRC) of 0.60 and a minimum Sound Transmission Class (STC) of 40 throughout the Government occupied space.

(c) Ceilings must be a flat plane in each room and suspended with ample light fixtures and finished as follows unless an alternate finish is approved by the Contracting Officer:

(1) *Restrooms: plaster or pointed and taped gypsum board.*

(2) Offices and Conference Rooms: mineral and acoustical tile or lay in panels with textured or patterned surface and tegular edges or equivalent quality to be approved by the Contracting Officer. Tiles or panels must contain recycled content.

(3) Corridors and Eating/Galley Areas: plaster or pointed and taped gypsum board or mineral acoustical tile.

WALL COVERINGS (JUL 2000) [Modified paragraph]

(a) PHYSICAL REQUIREMENTS:

(1) Prior to occupancy, partitioned offices and open office areas shall be covered with vinyl or polyolefin commercial wall covering weighing not less that 13 ounces per square yard as specified in FS CCC-W-408C or equivalent. The quality of finish shall be approved by the Contracting Officer.

(2) Selected offices and conference rooms as specified below are to be covered with wood paneling or textile covering to be approved by the Contracting Officer.

_____

_____

_____

_____

(3) Prior to occupancy all restrooms offered to comply with the restroom fixture schedule of this solicitation must have ceramic tile in splash areas and vinyl wall covering not less than 13 ounces per square yard as specified in FS CCC-W-408C on remaining wall areas or equivalent quality as approved by the Contracting Officer, unless an alternate finish is approved by the Contracting Officer.

(4) Prior to occupancy all elevator areas which access the Government's leased space, hallways within or accessing the Government's leased space and eating/galley areas within the Government's leased space are to be covered with vinyl wall coverings not less than 22 ounces per square yard as specified in FS CCC-W-408C, or equivalent quality as approved by the Contracting Officer, unless an alternate finish is approved by the Contracting Officer.

(b) REPLACEMENT:

All wall covering is to be maintained in "like new" condition for the life of the lease. Wall covering must be replaced or repaired at the Lessor's expense, including moving and replacing furnishings, (except where wall covering has been damaged due to the negligence of the Government), anytime during the occupancy by the Government if it is torn, peeling or permanently stained; the ceramic tile in the restrooms must be replaced or repaired if it is loose, chipped, broken or permanently discolored. All repair and replacement work is to be done after working hours.

(c) SAMPLES:

The Lessor is to provide at least 6 samples of each type of wall covering to be installed for selection by the Contracting Officer.

(d) PAINTING:

(1) Prior to occupancy all surfaces designated by GSA for painting must be newly painted in colors acceptable to GSA. All painted surfaces, including any partitioning installed by the Government or the Lessor after Government occupancy, must be repainted after working hours at Lessor expense at least every 5 years. This includes moving and return of furniture. Public areas must be painted at least every 3 years.

(2) Where feasible, reprocessed or consolidated latex paint with low VOC should be used in accordance with EPA's Comprehensive Procurement Guideline. The type of paint shall be acceptable to the Contracting Officer. Lessor shall follow manufacturer's recommendations for the application and maintenance of all paint products.

PAINTING (JUL 2000) [Modified paragraph]

(a) Prior to occupancy all surfaces designated by GSA for painting must be newly painted in colors acceptable to GSA. All painted surfaces, including any partitioning installed by the Government or Lessor after Government occupancy, must be repainted after working hours at Lessor expense at least every 5 years. This includes moving and return of (standard and systems – check with Ken on this par. Re TI SFO) furniture. Public areas must be painted at least every 3 years.

(b) Where feasible, reprocessed or consolidated latex paint with low VOC should be used in accordance with EPA's Comprehensive Procurement Guideline. The type of paint shall be acceptable to the Contracting Officer. Lessor shall follow manufacturer's recommendations for the application and maintenance of all paint products.

CARPET TILE (JUL 2000) [Modified paragraph]

(a) Approximately 99% percent of the space shall be carpeted with carpet tile.

(b) Any carpet to be newly installed must meet the following specifications:

(1) Pile Yarn Content: staple filament or continuous filament branded by a fiber producer (e.g., Allied, Dupont, Monsanto, BASF), soil hiding nylon or polyethylene terephthalate (PET) resin.

(2) Environmental requirements: Lessors shall use carpet that meets the "Green Label" requirements of the Carpet Research Institute unless an exception is granted by the Contracting Officer.

(3) Pile Yarn Content: staple filament or continuous filament branded by a fiber producer (Allied, Dupont, Monsanto, BASF), soil-hiding nylon.

(4) Carpet pile construction: tufted level loop, level cut pile, or level cut/uncut pile.

(5) Pile weight: 28 ounces per square yard is the minimum for level loop and cut pile. 32 ounces per square yard is the minimum for plush and twist.

(6) Secondary back: PVC, EVA (ethylene vinyl acetate), polyurethane, polyethylene, bitumen or olefinic hardback reinforced with fiberglass.

(7) Total weight: minimum of 130 ounces per square yard.

(8) Density: 100 percent nylon (loop and cut pile) -- minimum of 4000; other fibers, including blends and combinations -- minimum of 4500.

(9) Pile height: minimum of 1/8 inch.

(10) Static buildup: maximum of 3.5 KV, when tested in accordance with AATCC-134.

(11) Carpet construction: minimum of 64 tufts per square inch.

SFO Section 6, Mechanical, Electrical, Plumbing

ENERGY COST SAVINGS (JUL 2000) [Modified paragraph]

(a) All offerors are encouraged to use Energy Savings Performance Contracts (ESPC) or utility agreements to achieve, maintain and/or exceed the ENERGY STAR Benchmark Score of 75, and are encouraged to include shared savings in their offer as a result of energy upgrades where applicable. The ENERGY STAR Online Benchmark Tool can be found at *www.epa.gov/energystar.*

(b) All new construction shall achieve an ENERGY STAR Building Label within one year after reaching 95 percent occupancy and continue to maintain the level of performance.

(c) Offerors may obtain a list of energy service companies qualified under the Energy Policy Act to perform ESPCs, as well as additional information on cost effective energy efficiency, renewables, and water conservation is available at *www.eren.doe.gov/femp* or by calling the FEMP Help Desk at 1-800-566-2877 for the ESPC qualified list.

DRINKING FOUNTAINS (JUL 2000) [Modified paragraph]

(a) The Lessor shall provide, on each floor of office space, a minimum of one chilled drinking fountain within every 150 feet of travel distance.

(b) Solder and flux in joining potable water supply piping shall not contain more than 0.2 percent lead and domestic water pipe or pipe fittings shall not contain more than 8 percent lead. In addition, the Lessor is to meet standards set forth in EPA's "Lead in Drinking Water Standards for Schools, and Non-Residential Buildings," EPA Publication 812-B-94-002, April 1994.

TOILET ROOMS (JUL 2000) [Modified paragraph]

(a) Separate toilet facilities for men and women shall be provided on each floor occupied by the Government in the building. The facilities must be located so that employees will not be required to travel more than 200 feet on one floor to reach the toilets. Each toilet room shall have sufficient water closets enclosed with modern stall partitions and doors, urinals (in men's room), and hot (set in accordance with applicable building codes) and cold water. Water closets and urinals shall not be visible when the exterior door is open.

(b) Each main toilet room shall contain the following equipment:

(1) A mirror above the lavatory.

(2) A toilet paper dispenser in each water closet stall, that will hold at least two rolls and allow easy, unrestricted dispensing.

(3) A coat hook on inside face of door to each water closet stall and on several wall locations by lavatories.

(4) At least one modern paper towel dispenser, soap dispenser and waste receptacle for every two lavatories.

(5) A coin operated sanitary napkin dispenser in women's toilet rooms with waste receptacle for each water closet stall.

(6) Ceramic tile, recycled glass tile, or comparable wainscot from the floor to a minimum height of 4 feet 6 inches.

(7) A disposable toilet seat cover dispenser.

(8) A counter area of at least 2 feet in length, exclusive of the lavatories (however, it may be attached to the lavatories) with a mirror above and a ground fault interrupt type convenience outlet located adjacent to the counter area.

(c) If newly installed, toilet partitions shall be made from recovered materials as listed in EPA's Comprehensive Procurement Guidelines.

HEATING AND AIR CONDITIONING (JUL 2000) [Modified paragraph]

(a) Temperatures shall conform to local commercial equivalent temperature levels and operating practices in order to maximize tenant satisfaction. These temperatures must be maintained throughout the leased premises and service areas, regardless of outside temperatures, during the hours of operation specified in the lease.

(b) During non-working hours, heating temperatures shall be set no higher than 55°F and air conditioning will not be provided except as necessary to return space temperatures to a suitable level for the beginning of working hours. Thermostats shall be secured from manual operation by key or locked cage. A key shall be provided to the GSA Field Office Manager.

(c) Simultaneous heating and cooling are not permitted.

(d) Areas having excessive heat gain or heat loss, or affected by solar radiation at different times of the day, shall be independently controlled.

(e) Zone Control. Individual thermostat control shall be provided for office space with control areas not to exceed 2000 BOMA Usable Square Feet. Areas which routinely have extended hours of operation shall be environmentally controlled through dedicated heating and air-conditioning equipment. Special purpose areas (such as photocopy centers, large conference rooms, computer rooms, etc.) with an internal cooling load in excess of 5 tons shall be independently controlled. Concealed package air-conditioning equipment shall be provided to meet localized spot cooling of tenant special equipment. Portable space heaters are prohibited from use.

(f) Equipment Performance. Temperature control for office spaces shall be assured by concealed central heating and air-conditioning equipment. The equipment shall maintain space temperature control over a range of internal load fluctuations of plus 0.5 Watt/sq.ft. to minus 1.5 Watts/sq.ft. from initial design requirements of the tenant.

(g) HVAC Use During Construction. The permanent HVAC System may be used to move both supply and return air during the construction process only if the following conditions are met:

(1) A complete air filtration system with 60 percent efficiency filters is installed and properly maintained,
(2) No permanent diffusers are used,
(3) No plenum-type return air system is employed,
(4) The HVAC duct system is adequately sealed to prevent the spread of airborne particulate and other contaminants,
(5) Following the building "flush-out", all duct systems are vacuumed with portable HEPA vacuums and documented clean in accordance with the National Air Duct Cleaners Association Specifications.

(h) Ductwork Re-use and Cleasing. Any ductwork to be reused and/or to remain in place shall be cleaned and tested and demonstrated to be clean in acordance with the standards set forth by the National Air Duct Cleaners Association. Cleaning is to occur immediately prior to Government occupancy to avoid contamination from construction dust and other airborne particulates.

(i) Insulation. All insulation must contain recovered materials as required by EPA's Comprehensive Procurement Guidelines and related recycled content recommendations.

(j) The Lessor shall conduct HVAC system balancing after any HVAC system alterations during the term of the lease and make a reasonable attempt to schedule major construction outside of office hours.

VENTILATION (JUL 2000) [Modified paragraph]

(Delete 2-line version of paragraph.)

(a) During working hours in periods of heating and cooling, ventilation shall be provided in accordance with ASHRAE Standard 62, Ventilation for Acceptable Indoor Air Quality.

(b) Conference rooms of _____ BOMA Usable Square Feet or greater shall be provided with a dedicated source of ventilation or be fitted with air handling equipment with smoke/odor removing filters.

(c) Air filtration shall be provided and maintained with filters having a minimum efficiency rating as determined by ASHRAE Standard 52. Pre-filters shall be 30 percent to 35 percent efficient. Final filters should be 80 percent to 85 percent efficient for particles at 3 microns.

(d) The Lessor shall conduct HVAC system balancing after all HVAC system alterations; and make a reasonable attempt to schedule major construction outside of office hours.

(e) Where the Lessor proposes that the Government should pay utilities:

(1) An automatic air or water economizer cycle must be provided to all air handling equipment.

(2) The building shall have a fully functional building automation system (BAS) capable of control, regulation, and monitoring of all environmental conditioning equipment. The BAS shall be fully supported by a service and maintenance contract.

LIGHTING: INTERIOR AND PARKING (JUL 2000) [Modified paragraph]

(Delete Switches, Jan 1997, paragraph.)

(a) Modern, diffused fluorescent fixtures using no more than 2.0 watts per ANSI/BOMA Usable square foot shall be provided. Such fixtures shall be capable of producing a light level of 50 average maintained foot-candles at working surface height throughout the space. Tubes shall then be removed to provide 30 foot-candles in portions of work areas other than work surfaces and 1-10 foot-candles or minimum levels sufficient to ensure safety in non-working areas. Exceptions may be granted by the GSA buildings manager. When the space is not in use by the Government, interior and exterior lighting, except that essential for safety and security purposes, shall be turned off.

(b) Exterior parking areas, vehicle driveways, pedestrian walkways and building perimeter shall have a minmum of 1 foot-candle of illumination and be designed based on Illumination Engineering Society standards. Exterior lighting and indoor parking shall be sufficient to accommodate security monitoring (i.e., closed circuit television camera). Indoor parking shall have a minimum of 10 foot-candles and be designed based on Illumination Engineering Society standards.

(c) The Lessor shall provide occupancy sensors and/or scheduling controls through building automation system to reduce the hours the lights are on when the space is unoccupied. Daylight dimming controls shall be used in atriums or other space where daylight can contribute to energy savings.

(d) Lighting shall be controlled by occupancy sensors arranged to control open areas, individual offices, conference rooms, toilet rooms within the Government demised area, and all other programmed spaces or rooms within the lease space. The control system shall provide an optimal mix of infrared and ultrasonic sensors suitable for the configuration and type of space. Occupancy sensors shall be located so that they have a clear view of the room or area they are monitoring. No more than 1,000 BOMA Usable Square Feet of open space shall be controlled by occupancy sensor. All occupancy sensors shall have manual switches to override the light control. Such switches shall be located by door openings in accordance with the Americans With Disabilities Act Accessibility Guidelines and the Uniform Federal Accessibility Standards. If light switches are to be used instead of occupancy sensors or in combination with occupancy sensors, the Offeror must notify the Government during the negotiation process.

LIGHTING: INTERIOR AND PARKING (JUL 2000) [Modified paragraph]

(a) Lessor shall provide deep-cell parabolic louver 2' x 4' or 2' x 2' (or building standard that meets or exceeds this standard) fluorescent fixtures with energy efficient lamps (T8 or better) and electronic ballasts for standard interior lighting. Such fixtures shall produce 50 average maintained foot-candles at working surface height throughout work spaces, 20 foot-candles in corridors, and 10 foot-candles in other non-working areas.

(b) Exterior parking areas, vehicle driveways, pedestrian walkways and building perimeter shall have a minmum of 1 foot-candle of illumination and be designed based on Illumination Engineering Society standards. Exterior lighting and indoor parking shall be sufficient to accommodate security monitoring (i.e., closed circuit television camera). Indoor parking shall have a minimum of 10 foot-candles and be designed based on Illumination Engineering Society standards.

(c) The Lessor shall provide occupancy sensors and/or scheduling controls through building automation system to reduce the hours the lights are on when the space is unoccupied. Daylight dimming controls shall be used in atriums or other space where daylight can contribute to energy savings.

(d) Lighting shall be controlled by occupancy sensors arranged to control open areas, individual offices, conference rooms, toilet rooms within the Government demised area, and all other programmed spaces or rooms within the lease space. The control system shall provide an optimal mix of infrared and ultrasonic sensors suitable for the configuration and type of space. Occupancy sensors shall be located so that they have a clear view of the room or area they are monitoring. No more than 1,000 BOMA Usable Square Feet of open space shall be controlled by occupancy sensor. All occupancy sensors shall have manual switches to override the light control. Such switches shall be located by door openings in accordance with the Americans With Disabilities Act Accessibility Guidelines and the Uniform Federal Accessibility Standards. If light switches are to be used instead of occupancy sensors or in combination with occupancy sensors, the Offeror must notify the Government during the negotiation process.

SFO Section 7, Services, Utilities, Maintenance

JANITORIAL SERVICES (JUL 2000) [Modified paragraph]

(a) The Lessor shall provide janitorial services for the leased space, public areas, entrances, and all other common areas and provide replacement of supplies.

(b) Selection of Cleaning Products. The Lessor shall make careful selection of janitorial cleaning products and equipment to –

(1) Use products that are packaged ecologically,
(2) Use products and equipment considered environmentally beneficial and/or recycled products that are phosphate free, non-corrosive, non-flammable and fully biodegradable and
(3) Minimize the use of harsh chemicals and the release of irritating fumes.

Examples of acceptable products may be found at http://pub.fss.gsa.gov/environ/clean-prod-catalog.html.

(c) Selection of Paper Products. The Lessor shall select paper and paper products (i.e., bathroom tissue and paper towels) with recycled content conforming to the EPA's Comprehensive Procurement Guidelines.

JANITORIAL SERVICES (JUL 2000) [Modified paragraph]

(a) Cleaning is to be performed after tenant working hours unless daytime cleaning is specified as a special requirement elsewhere in this solicitation.

(b) The Lessor shall maintain the leased premises, including outside areas in a clean condition and shall provide supplies and equipment. The following schedule describes the level of services intended. Performance will be based on the Contracting Officer's evaluation of results, not the frequency or method of performance.

(1) DAILY:
Empty trash receptacles and clean ashtrays. Sweep entrances, lobbies and corridors. Spot sweep floors and spot vacuum carpets. Clean drinking fountains. Sweep and damp mop or scrub toilet rooms. Clean all toilet fixtures and replenish toilet supplies. Dispose of all trash and garbage generated in or about the building. Wash inside and out or steam clean cans used for collection of food remnants from snack bars and vending machines. Dust horizontal surfaces that are readily available and visibly require dusting. Spray buff resilient floors in main corridors, entrances and lobbies, clean elevators and escalators, remove carpet stains. Police sidewalks, parking areas and driveways. Sweep loading dock areas and platforms.

(2) THREE TIMES A WEEK:
Sweep or vacuum stairs.

(3) WEEKLY:
Damp mop and spray buff all resilient floors in toilets and health units. Sweep sidewalks, parking areas and driveways (weather permitting).

(4) EVERY TWO WEEKS:
Spray buff resilient floors in secondary corridors, entrance and lobbies. Damp mop and spray buff hard and resilient floors in office space.

(5) MONTHLY:
Thoroughly dust furniture. Completely sweep and/or vacuum carpets. Sweep storage space. Spot clean all wall surfaces within 70 inches of the floor.

(6) EVERY TWO MONTHS:
Damp wipe toilet wastepaper receptacles, stall partitions, doors, window sills and frames. Shampoo entrance and elevator carpets.

(7) THREE TIMES A YEAR:
Dust wall surfaces within 70 inches of the floor, vertical surfaces and under surfaces. Clean metal and marble surfaces in lobbies. Wet mop or scrub garages.

(8) TWICE A YEAR:
Wash all interior and exterior windows and other glass surfaces. Strip and apply four coats of finish to resilient floors in toilets. Strip and refinish main corridors and other heavy traffic areas.

(9) ANNUALLY:
Wash all venetian blinds and dust 6 months from washing. Vacuum or dust all surfaces in the building of 70 inches from the floor, including light fixtures. Vacuum all drapes in place. Strip and refinish floors in offices and secondary lobbies and corridors. Shampoo carpets in corridors and lobbies. Clean balconies, ledges, courts, areaways and flat roofs.

(10) EVERY TWO YEARS:
Shampoo carpets in all offices and other non-public areas.

(11) EVERY FIVE YEARS:
Dry clean or wash (as appropriate) all drapes.

(12) AS REQUIRED:
Properly maintain plants and lawns, remove snow and ice from entrances, exterior walks and parking lots of the building. Provide initial supply, installation and replacement of light bulbs, tubes, ballasts and starters. Replace worn floor coverings (this includes moving and return of furniture). Control pests as appropriate, using Integrated Pest Management techniques.

(c) Selection of Cleaning Products. The Lessor shall make careful selection of janitorial cleaning products and equipment to –

(1) Use products that are packaged ecologically,
(2) Use products and equipment considered environmentally beneficial and/or recycled products that are phosphate free, non-corrosive, non-flammable and fully biodegradable and
(3) Minimize the use of harsh chemicals and the release of irritating fumes.

Examples of acceptable products may be found at http://pub.fss.gsa.gov/environ/clean-prod-catalog.html.

(d) Selection of Paper Products. The Lessor shall select paper and paper products (i.e., bathroom tissue and paper towels) with recycled content conforming to the EPA's Comprehensive Procurement Guidelines.

SFO Section 8, Safety and Environmental Management

INDOOR AIR QUALITY (JUL 2000) [Modified paragraph]

(a) The Lessor shall control contaminants at the source and/or operate the space in such a manner that the GSA indicator levels for carbon monoxide (CO), carbon dioxide (CO_2), and formaldehyde (HCHO) are not exceeded. The indicator levels for office areas shall be: CO - 9 parts per million (ppm) time-weighted average (TWA - 8-hour sample); CO_2 - 1000 ppm (TWA); formaldehyde - 0.1 ppm (TWA).

(b) The Lessor shall make a reasonable attempt to apply insecticides, paints, glues, adhesives, and heating, ventilating and air conditioning (HVAC) system cleaning compounds with highly volatile or irritating organic compounds, outside of working hours. The Lessor shall provide at least 72 hours advance notice to the Government before applying noxious chemicals in occupied spaces, and adequately ventilate those spaces during and after application.

(c) The Lessor shall promptly investigate indoor air quality (IAQ) complaints and shall implement the necessary controls to address the complaint.

(d) The Government reserves the right to conduct independent IAQ assessments and detailed studies in space it occupies, as well as in space serving the Government-leased space (e.g., common use areas, mechanical rooms, HVAC systems, etc.). The Lessor shall assist the Government in its assessments and detailed studies by making available information on building operations and Lessor activities, and providing access to space for assessment and testing, if required, and implement corrective measures required by the Contracting Officer.

(e) The Lessor shall provide to the Government Materials Safety Data Sheets (MSDS) upon request for the following products prior to their use during the term of the lease: adhesives, caulking, sealants, insulating materials, fireproofing or firestopping materials, paints, carpets, floor and wall patching or leveling materials, lubricants, clear finish for wood surfaces, janitorial cleaning products, pesticides, rodenticides, and herbicides. The Government reserves the right to review such products used by the Lessor within the Government's

lease space, common building areas and ventilation systems and zones serving the leased space, and the area above suspended ceilings and engineering space in the same ventilation zone as the leased space.

RADON IN WATER (JUL 2000) [Modified paragraph]

(a) The Lessor shall demonstrate that water provided in leased space is in compliance with EPA requirements and shall submit certification to the Contracting Officer prior to the Government occupying the space.

(b) If the EPA action level is reached or exceeded, the Lessor shall institute appropriate abatement methods which reduce the radon levels to below this action level.

Minimal Alterations and Improvements Lease Paragraphs

In accordance with Attachment 1 of this acquisition letter, realty professionals shall use the following paragraphs for leases involving minimal alterations and improvements based on the scope of the project and in support of Executive Orders 13101 and 13123, except when:

(1) The cost of the recommended product is unreasonable,
(2) Inadequate competition exists,
(3) Items are not available within a reasonable period of time, or
(4) Items do not meet the solicitation's performance standards.

EXISTING FIT-OUT, SALVAGED, OR RE-USED BUILDING MATERIAL (JUL 2000) [New paragraph]

(a) Items and material existing in the offered space or to be removed from the offered space during the demolition phase are eligible for reuse in the construction phase of the project. The reuse of items and materials is preferable to recycling them; however, items considered for reuse must be in refurbishable condition, and must meet the quality standards set forth by the Government in this SFO. In the absence of definitive quality standards, the Lessor is to ensure that the quality of the item(s) in question will meet or exceed accepted industry or trade standards for first quality commercial grade applications.

(b) Lessor shall submit a reuse plan to the Contracting Officer, when requested. The Government will not pay for existing fixtures and other Tenant Improvements accepted in place. However, the Government will reimburse the Lessor, as part of the Tenant Improvement allowance, the costs to repair or improve such fixtures or improvements identified on the reuse plan and approved by the Contracting Officer.

INDOOR AIR QUALITY DURING CONSTRUCTION (JUL 2000) [New paragraph]

(a) All Government Materials Safety Data Sheets (MSDS) must comply with OSHA requirements. The Lessor and its agents must comply with all recommended measures in the MSDSs to protect the health and safety of personnel.

(b) Low Volatile Organic Compound (VOC) materials and products shall be used to the greatest extent possible. Particle board, strawboard and plywood materials shall comply with HUD Standards for VOC emissions (particleboard: 0.2 ppm of formaldehyde, plywood: 0.3 ppm of formaldehyde). All adhesives used (including, but not limited to, adhesives for carpet, carpet tile, plastic laminate, wallcoverings, wood adhesive, or sealants) shall be those with the lowest possible VOC content below 20 g/L., which meets the requirements of the manufacturer of the products adhered or involved. Where feasible, reprocessed or consolidated latex paint with low VOC should be used in accordance with EPA's Comprehensive Procurement Guideline.

(c) During working hours in periods of heating and cooling, ventilation shall be provided in accordance with ASHRAE Standard 62, Ventilation for Acceptable Indoor Air Quality.

(d) To the greatest extent possible, Lessor shall sequence the installation of finish materials so that materials that will be high emitters of VOCs are installed and allowed to cure before installing interior finish materials, especially soft materials that are woven, fibrous, or porous in nature, that may adsorb contaminants and release them over time.

(e) A final flush-out period of 48 to 72 hours should be provided before occupancy. Lessor shall ventilate with 100 percent outside air at the recommended air change rate (ASHRAE Standard 62) during installation of materials and finishes. If outside air would cause unacceptable inside temperature levels, humidity levels, and/or air quality, an alternate ventilation plan may be submitted to the Contracting Officer for approval.

RECYCLED CONTENT PRODUCTS (COMPREHENSIVE PROCUREMENT GUIDELINES) (JUL 2000) [New paragraph]

The Lessor shall comply to the extent feasible with the Resource Conservation and Recovery Act (RCRA), Section 6002, 1976, by using recycled content products as designated by the U.S. Environmental Protection Agency in the Comprehensive Procurement Guideline (CPG), 40 CFR Part 247, and its accompanying Recovered Material Advisory Notice (RMAN). The CPG lists the designated recycled content products. EPA also provides recommended levels of recycled content for these products. The list of designated products, EPA's recommendations, and lists of manufacturers and suppliers of the products can be found at *www.epa.gov/cpg/products.htm*.

ENVIRONMENTALLY PREFERABLE BUILDING PRODUCTS AND MATERIALS (JUL 2000) [New paragraph]

The Lessor shall use environmentally preferable products and materials where economically feasible. Environmentally preferable products have a lesser or reduced effect on human health and the environment when compared to other products and services that serve the same purpose. Refer to EPA's environmentally preferable products web site, *www.epa.gov/opptintr/epp*.

JANITORIAL SERVICES (JUL 2000) [New paragraph]

(a) Selection of Cleaning Products. The Lessor shall make careful selection of janitorial cleaning products and equipment to –

(1) Use products that are packaged ecologically,
(2) Use products and equipment considered environmentally beneficial and/or recycled products that are phosphate free, non-corrosive, non-flammable and fully biodegradable and
(3) Minimize the use of harsh chemicals and the release of irritating fumes.

Examples of acceptable products may be found at http://pub.fss.gsa.gov/environ/clean-prod-catalog.html.

(b) Selection of Paper Products. The Lessor shall select paper and paper products (i.e., bathroom tissue and paper towels) with recycled content conforming to the EPA's Comprehensive Procurement Guidelines.

(b) (5)

THIS DRAWING IS FOR PRELIMINARY PURPOSES ONLY. THE INFORMATION CONTAINED IN THIS DRAWING IS NOT INTENDED TO REPRESENT A BOUNDARY SURVEY OR ANY CONSTRUCTION PLAN INFORMATION. THIS DRAWING SHOULD NOT BE USED FOR SUBMITTAL TO GOVERNMENTAL AGENCIES.

APPROVAL STATUS

[illegible]	ROAD COMMISSION REVIEW OR APPROVAL
[illegible]	DRAIN COMMISSION REVIEW OR APPROVAL
[illegible]	CITY/COUNTY REVIEW OR APPROVAL
[illegible]	MDEQ REVIEW OF APPROVAL

GENERAL NOTES

1. ZONING REQUIREMENTS:

CURRENT ZONING	TS1
PROPOSED ZONING	TS1

LOT & SETBACKS:

FRONT YARD	50ft
SIDE YARD	10ft
REAR YARD	45ft
MIN WIDTH	100ft
MAX HEIGHT	30ft
MIN LOT SQ/FT	10,000sq/ft

2. SUMMARY OF LAND USE:

TOTAL GREEN AREA	= 88,744sq/ft (88.30%)
TOTAL BUILDING COVERAGE	= 3,500sq/ft (3.56%)
TOTAL PAVED AREA	= 7,997sq/ft (8.14%)
TOTAL ACREAGE	= 2.26ac (98,241sq/ft)
TOTAL PARKING REQUIRED	= 11
TOTAL PARKING PROPOSED	= 13

DESCRIPTION:

GENERAL NOTES:

1. UTILITIES SHOWN (IF ANY) ARE APPROXIMATE LOCATIONS DERIVED FROM ACTUAL MEASUREMENTS OR AVAILABLE RECORDS. THIS MAP IS NOT TO BE INTERPRETED AS SHOWING EXACT LOCATIONS OR SHOWING ALL UTILITIES IN THE AREA.
2. NOTE TO CONTRACTORS: THREE WORKING DAYS BEFORE YOU DIG CALL MISS DIG AT 1-800-482-7171.
3. CONTOUR INTERVAL = 1 FOOT.
4. BENCHMARK:

ELEVATION:

N

0' 15' 30' 60'

SCALE: 1" = 30'

LOCATION MAP – NO SCALE

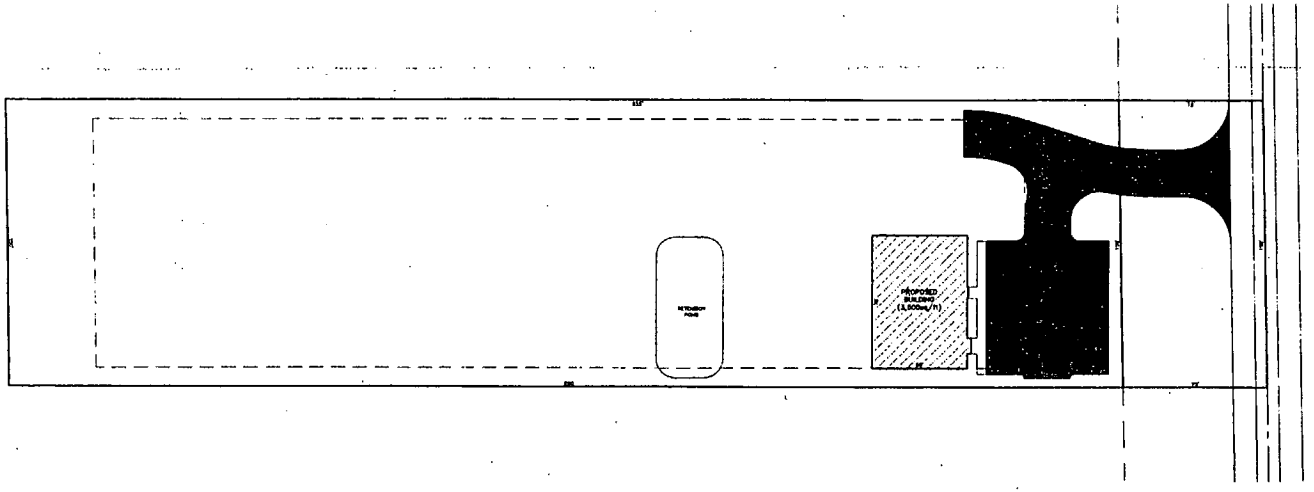

LEGEND

	EXISTING	PROPOSED
MONUMENT		
IRON SET		
IRON FOUND		
LIGHT POLE		
GUY ANCHOR		
UTILITY POLE		
CLEANOUT		
VALVE (WATER & GAS)		
STORM SEWER MANHOLE		
SANITARY SEWER MANHOLE		
CATCH BASIN		
FIRE HYDRANT		
TRANSFORMER		
UTILITY RISER		
MAIL BOX		
ELECTRIC METER		
GAS METER		
SIGN		
POST		
SOIL BORING		
ELECTRIC		
TELEPHONE		
CABLE TV		
FIBER OPTIC		
GAS LINE		
EXISTING WATER LINE		
PROPOSED WATER LINE		
EXISTING STORM SEWER		
PROPOSED STORM SEWER		
EXISTING SANITARY SEWER		
PROPOSED SANITARY SEWER		

DRIESENGA & ASSOCIATES, INC.

Engineering Surveying Testing

Holland, MI Ph. 616-396-0220 | Clifford Rapids, MI Ph. 616-745-5310 | Lagrange Lake, MI Ph. 616-846-1960 | Chillicothe, MI Ph. 231-894-5106

CADILLAC OFFICE
SECTION, TOWN & RANGE
SCOTT GEERLINGS
ADDRESS
HOLLAND, MICHIGAN

CADILLAC S.S. BUILDING

REVISIONS

1	
2	
3	
4	
5	

Designed By: ROL
Drawn By: ROL
Checked By: Date:
Plot:
Scale: 1" = 30'
Date: 12-27-00
Job No.: CADILLAC
Sheet No.: 1 of 1

EXHIBIT B

GENERAL CLAUSES
(Acquisition of Leasehold Interests in Real Property)

CATEGORY	Clause No.	48 CFR Ref.	Clause Title
DEFINITIONS	1	552.270-4	Definitions
GENERAL	2	552.270-5	Subletting and Assignment
	3	552.270-11	Successors Bound
	4	552.270-23	Subordination, Nondisturbance and Attornment
	5	552.270-24	Statement of Lease
	6	552.270-25	Substitution of Tenant Agency
	7	552.270-26	No Waiver
	8	552.270-27	Integrated Agreement
	9	552.270-28	Mutuality of Obligation
PERFORMANCE	10	552.270-17	Delivery and Condition
	11	552.270-18	Default in Delivery - Time Extensions (Variation)
	12	552.270-19	Progressive Occupancy
	13	552.270-21	Effect of Acceptance and Occupancy
	14	552.270-6	Maintenance of Building and Premises-Right of Entry
	15	552.270-10	Failure in Performance
	16	552.270-22	Default by Lessor During the Term
	17	552.270-7	Fire and Casualty Damage
	18	552.270-8	Compliance with Applicable Law
	19	552.270-12	Alterations
	20	552.270-29	Acceptance of Space
INSPECTION	21	552.270-9	Inspection-Right of Entry
PAYMENT	22	552.232-75	Prompt Payment
	23	552.232-76	Electronic Funds Transfer Payment (Variation)
	24	552.232-70	Invoice Requirements
	25	52.232-23	Assignment of Claims
	26	552.270-20	Payment (Variation)
STANDARDS OF CONDUCT	27	552.203-5	Covenant Against Contingent Fees
	28	52.203-7	Anti-Kickback Procedures
	29	52.223-6	Drug-Free Workplace
ADJUSTMENTS	30	552.203-70	Price Adjustment for Illegal or Improper Activity
	31	52.215-10	Price Reduction for Defective Cost or Pricing Data
	32	552.270-13	Proposals for Adjustment
	33	552.270-14	Changes (Variation)
AUDITS	34	552.215-70	Examination of Records by GSA
	35	52.215-2	Audit and Records—Negotiation
DISPUTES	36	52.233-1	Disputes

INITIALS: _____ & _____
LESSOR GOVERNMENT

LABOR STANDARDS	37	52.222-26	Equal Opportunity
	38	52.222-21	Prohibition of Segregated Facilities
	39	52.222-35	Affirmative Action for Disabled Veterans and Veterans of the Vietnam Era
	40	52.222-36	Affirmative Action for Workers with Disabilities
	41	52.222-37	Employment Reports on Disabled Veterans and Veterans of the Vietnam Era
SUBCONTRACTING	42	52.209-6	Protecting the Government's Interest When Subcontracting With Contractors Debarred, Suspended, or Proposed for Debarment
	43	52.215-12	Subcontractor Cost or Pricing Data
	44	52.219-8	Utilization of Small Business Concerns
	45	52.219-9	Small Business Subcontracting Plan
	46	52.219-16	Liquidated Damages- Subcontracting Plan
ADVERTISING	47	552.203-71	Restriction on Advertising

GENERAL CLAUSES
(Acquisition of Leasehold Interests in Real Property)

1. 552.270-4 - DEFINITIONS (SEP 1999)

The following terms and phrases (except as otherwise expressly provided or unless the context otherwise requires) for all purposes of this lease shall have the respective meanings hereinafter specified:

(a) "Commencement Date" means the first day of the term.

(b) "Contract" and "Contractor" means "Lease" and "Lessor," respectively.

(c) "Contracting Officer" means a person with the authority to enter into, administer, and/or terminate contracts and make related determinations and findings. The term includes certain authorized representatives of the Contracting Officer acting within the limits of their authority as delegated by the Contracting Officer.

(d) "Delivery Date" means the date specified in or determined pursuant to the provisions of this lease for delivery of the premises to the Government, improved in accordance with the provisions of this lease and substantially complete, as such date may be modified in accordance with the provisions of this lease.

(e) "Delivery Time" means the number of days provided by this lease for delivery of the premises to the Government, as such number may be modified in accordance with the provisions of this lease.

(f) "Excusable Delays" mean delays arising without the fault or negligence of Lessor and Lessor's subcontractors and suppliers at any tier, and shall include, without limitation, (1) acts of God or of the public enemy, (2) acts of the United States of America in either its sovereign or contractual capacity, (3) acts of another contractor in the performance of a contract with the Government, (4) fires, (5) floods, (6) epidemics, (7) quarantine restrictions, (8) strikes, (9) freight embargoes, (10) unusually severe weather, or (11) delays of subcontractors or suppliers at any tier arising from unforeseeable causes beyond the control and without the fault or negligence of both the Lessor and any such subcontractor or supplier.

(g) "Lessor" means the sub-lessor if this lease is a sublease.

(h) "Lessor shall provide" means the Lessor shall furnish and install at Lessor's expense.

(i) "Notice" means written notice sent by certified or registered mail, Express Mail or comparable service, or delivered by hand. Notice shall be effective on the date delivery is accepted or refused.

(j) "Premises" means the space described on the Standard Form 2, U.S. Government Lease for Real Property, of this lease.

(k) "Substantially complete" and "substantial completion" means that the work, the common and other areas of the building, and all other things necessary for the Government's access to the premises and occupancy, possession, use and enjoyment thereof, as provided in this lease, have been completed or obtained, excepting only such minor matters as do not interfere with or materially diminish such access, occupancy, possession, use or enjoyment.

(l) "Work" means all alterations, improvements, modifications, and other things required for the preparation or continued occupancy of the premises by the Government as specified in this lease.

2. 552.270-5 - SUBLETTING AND ASSIGNMENT (SEP 1999)

The Government may sublet any part of the premises but shall not be relieved from any obligations under this lease by reason of any such subletting. The Government may at any time assign this lease, and be relieved from all obligations to Lessor under this lease excepting only unpaid rent and other liabilities, if any, that have accrued to the date of said assignment. Any assignment shall be subject to prior written consent of Lessor, which shall not be unreasonably withheld.

3. 552.270-11 SUCCESSORS BOUND (SEP 1999)

This lease shall bind, and inure to the benefit of, the parties and their respective heirs, executors, administrators, successors, and assigns.

4. 552.270-23 - SUBORDINATION, NONDISTURBANCE AND ATTORNMENT (SEP 1999)

(a) Lessor warrants that it holds such title to or other interest in the premises and other property as is necessary to the Government's access to the premises and full use and enjoyment thereof in accordance with the provisions of this lease. Government agrees, in consideration of the warranties and conditions set forth in this clause, that this lease is subject and subordinate to any and all recorded mortgages, deeds of trust and other liens now or hereafter existing or imposed upon the premises, and to any renewal, modification or extension thereof. It is the intention of the parties that this provision shall be self-operative and that no further instrument shall be required to effect the present or subsequent subordination of this lease. Government agrees, however, within twenty (20) business days next following the Contracting Officer's receipt of a written demand, to execute such instruments as Lessor may reasonably request to evidence further the subordination of this lease to any existing or future mortgage, deed of trust or other security interest pertaining to the premises, and to any water, sewer or access easement necessary or desirable to serve the premises or adjoining property owned in whole or in part by Lessor if such easement does not interfere with the full enjoyment of any right granted the Government under this lease.

(b) No such subordination, to either existing or future mortgages, deeds of trust or other lien or security instrument shall operate to affect adversely any right of the Government under this lease so long as the Government is not in default under this lease. Lessor will include in any future mortgage, deed of trust or other security instrument to which this lease becomes subordinate, or in a separate nondisturbance agreement, a provision to the foregoing effect. Lessor warrants that the holders of all notes or other obligations secured by existing mortgages, deeds of trust or other security instruments have consented to the provisions of this clause, and agrees to provide true copies of all such consents to the Contracting Officer promptly upon demand.

(c) In the event of any sale of the premises or any portion thereof by foreclosure of the lien of any such mortgage, deed of trust or other security instrument, or the giving of a deed in lieu of foreclosure, the Government will be deemed to have attorned to any purchaser, purchasers, transferee or transferees of the premises or any portion thereof and its or their successors and assigns, and any such purchasers and transferees will be deemed to have assumed all obligations of the Lessor under this lease, so as to establish direct privity of estate and contract between Government and such purchasers or transferees, with the same force, effect and relative priority in time and right as if the lease had initially been entered into between such purchasers or transferees and the Government; provided, further, that the Contracting Officer and such purchasers or transferees shall, with reasonable promptness following any such sale or deed delivery in lieu of foreclosure, execute all such revisions to this lease, or other writings, as shall be necessary to document the foregoing relationship.

(d) None of the foregoing provisions may be deemed or construed to imply a waiver of the Government's rights as a sovereign.

5. 552.270-24 - STATEMENT OF LEASE (AUG 1999)

(a) The Contracting Officer will, within thirty (30) days next following the Contracting Officer's receipt of a joint written request from Lessor and a prospective lender or purchaser of the building, execute and deliver to Lessor a letter stating that the same is issued subject to the conditions stated in this clause and, if such is the case, that (1) the lease is in full force and effect; (2) the date to which the rent and other charges have been paid in advance, if any; and (3) whether any notice of default has been issued.

(b) Letters issued pursuant to this clause are subject to the following conditions:

(1) That they are based solely upon a reasonably diligent review of the Contracting Officer's lease file as of the date of issuance;
(2) That the Government shall not be held liable because of any defect in or condition of the premises or building;
(3) That the Contracting Officer does not warrant or represent that the premises or building comply with applicable Federal, State and local law; and
(4) That the Lessor, and each prospective lender and purchaser are deemed to have constructive notice of such facts as would be ascertainable by reasonable prepurchase and precommitment inspection of the Premises and Building and by inquiry to appropriate Federal, State and local Government officials.

6. 552.270-25 - SUBSTITUTION OF TENANT AGENCY (SEP 1999)

The Government may, at any time and from time to time, substitute any Government agency or agencies for the Government agency or agencies, if any, named in the lease.

7. 552.270-26 - NO WAIVER (SEP1999)

No failure by either party to insist upon the strict performance of any provision of this lease or to exercise any right or remedy consequent upon a breach thereof, and no acceptance of full or partial rent or other performance by either party during the continuance of any such breach shall constitute a waiver of any such breach of such provision.

8. 552.270-27 - INTEGRATED AGREEMENT (SEP 1999)

This Lease, upon execution, contains the entire agreement of the parties and no prior written or oral agreement, express or implied, shall be admissible to contradict the provisions of the Lease.

9. 552.270-28 - MUTUALITY OF OBLIGATION (SEP 1999)

The obligations and covenants of the Lessor, and the Government's obligation to pay rent and other Government obligations and covenants, arising under or related to this Lease, are interdependent. The Government may, upon issuance of and delivery to Lessor of a final decision asserting a claim against Lessor, set off such claim, in whole or in part, as against any payment or payments then or thereafter due the Lessor under this lease. No setoff pursuant to this clause shall constitute a breach by the Government of this lease.

10. 552.270-17 - DELIVERY AND CONDITION (SEP 1999)

(a) Unless the Government elects to have the space occupied in increments, the space must be delivered ready for occupancy as a complete unit. The Government reserves the right to determine when the space is substantially complete.

(b) If the premises do not in every respect comply with the provisions of this lease the Contracting Officer may, in accordance with the Failure in Performance clause of this lease, elect to reduce the rent payments.

11. 552.270-18 - DEFAULT IN DELIVERY - TIME EXTENSIONS (SEP 1999) (VARIATION)

(a) With respect to Lessor's obligation to deliver the premises substantially complete by the delivery date (as such date may be modified pursuant to this lease), time is of the essence. If the Lessor fails to prosecute the work with the diligence that will ensure its substantial completion by the delivery date or fails to substantially complete the work by such date, the Government may by notice to the Lessor terminate this lease, which termination shall be effective when received by Lessor. The Lessor and the Lessor's sureties, if any, shall be jointly and severally liable for any damages to the Government resulting from such termination, as provided in this clause. The Government shall be entitled to the following damages:

(1) The Government's aggregate rent and estimated real estate tax and operating cost adjustments for the firm term and all option terms of its replacement lease or leases, in excess of the aggregate rent and estimated real estate tax and operating cost adjustments for the term; provided, if the Government procures replacement premises for a term (including all option terms) in excess of the term, the Lessor shall not be liable for excess Government rent or adjustments during such excess part of such term;
(2) All administrative and other costs borne by the Government in procuring a replacement lease or leases;
(3) Such other, additional relief as may be provided for in this lease, at law or in equity.
(4) Damages to which the Government may be entitled under this clause shall be due and payable thirty (30) days next following the date Lessor receives notice from the Contracting Officer specifying such damages.

(b) Delivery by Lessor of less than the minimum ANSI/BOMA Usable square footage required by this lease shall in no event be construed as substantial completion, except as permitted by the Contracting Officer.

(c) Notwithstanding paragraph (a) of this clause, this lease shall not be terminated under this clause nor the Lessor charged with damages under this clause, if (1) the delay in substantially completing the work arises from excusable delays and (2) the Lessor within 10 days from the beginning of any such delay (unless extended in writing by the Contracting Officer) provides notice to the Contracting Officer of the causes of delay. The Contracting

Officer shall ascertain the facts and the extent of delay. If the facts warrant such action, the delivery date shall be extended, by the Contracting Officer, to the extent of such delay at no additional costs to the Government. A time extension is the sole remedy of the Lessor.

12. 552.270-19 - PROGRESSIVE OCCUPANCY (SEP 1999)

The Government shall have the right to elect to occupy the space in partial increments prior to the substantial completion of the entire leased premises, and the Lessor agrees to schedule its work so as to deliver the space incrementally as elected by the Government. The Government shall pay rent commencing with the first business day following substantial completion of the entire leased premise unless the Government has elected to occupy the leased premises incrementally. In case of incremental occupancy, the Government shall pay rent pro rata upon the first business day following substantial completion of each incremental unit. Rental payments shall become due on the first workday of the month following the month in which an increment of space is substantially complete, except that should an increment of space be substantially completed after the fifteenth day of the month, the payment due date will be the first workday of the second month following the month in which it was substantially complete. The commencement date of the firm lease term will be a composite determined from all rent commencement dates.

13. 552.270-21 - EFFECT OF ACCEPTANCE AND OCCUPANCY (SEP 1999)

Neither the Government's acceptance of the premises for occupancy, nor the Government's occupancy thereof, shall be construed as a waiver of any requirement of or right of the Government under this Lease, or as otherwise prejudicing the Government with respect to any such requirement or right.

14. 552.270-6 - MAINTENANCE OF BUILDING AND PREMISES - RIGHT OF ENTRY (SEP 1999)

Except in case of damage arising out of the willful act or negligence of a Government employee, Lessor shall maintain the premises, including the building, building systems, and all equipment, fixtures, and appurtenances furnished by the lessor under this lease, in good repair and condition so that they are suitable in appearance and capable of supplying such heat, air conditioning, light, ventilation, safety systems, access and other things to the premises, without reasonably preventable or recurring disruption, as is required for the Government's access to, occupancy, possession, use and enjoyment of the premises as provided in this lease. For the purpose of so maintaining the premises, the Lessor may at reasonable times enter the premises with the approval of the authorized Government representative in charge.

15. 552.270-10 - FAILURE IN PERFORMANCE (SEP 1999)

The covenant to pay rent and the covenant to provide any service, utility, maintenance, or repair required under this lease are interdependent. In the event of any failure by the Lessor to provide any service, utility, maintenance, repair or replacement required under this lease the Government may, by contract or otherwise, perform the requirement and deduct from any payment or payments under this lease, then or thereafter due, the resulting cost to the Government, including all administrative costs. If the Government elects to perform any such requirement, the Government and each of its contractors shall be entitled to access to any and all areas of the building, access to which is necessary to perform any such requirement, and the Lessor shall afford and facilitate such access. Alternatively, the Government may deduct from any payments under this lease, then or thereafter due, an amount which reflects the reduced value of the contract requirement not performed. No deduction from rent pursuant to this clause shall constitute a default by the Government under this lease. These remedies are not exclusive and are in addition to any other remedies which may be available under this lease or at law.

16. 552.270-22 - DEFAULT BY LESSOR DURING THE TERM (SEP 1999)

(a) Each of the following shall constitute a default by Lessor under this lease:

(1) Failure to maintain, repair, operate or service the premises as and when specified in this lease, or failure to perform any other requirement of this lease as and when required provided any such failure shall remain uncured for a period of thirty (30) days next following Lessor's receipt of notice thereof from the Contracting Officer or an authorized representative.

(2) Repeated and unexcused failure by Lessor to comply with one or more requirements of this lease shall constitute a default notwithstanding that one or all such failures shall have been timely cured pursuant to this clause.

(b) If a default occurs, the Government may, by notice to Lessor, terminate this lease for default and if so terminated, the Government shall be entitled to the damages specified in the Default in Delivery-Time Extensions clause.

17. 552.270-7 - FIRE AND CASUALTY DAMAGE (SEP 1999)

If the entire premises are destroyed by fire or other casualty, this lease will immediately terminate. In case of partial destruction or damage, so as to render the premises untenantable, as determined by the Government, the Government may terminate the lease by giving written notice to the Lessor within 15 calendar days of the fire or other casualty; if so terminated, no rent will accrue to the Lessor after such partial destruction or damage; and if not so terminated, the rent will be reduced proportionately by supplemental agreement hereto effective from the date of such partial destruction or damage. Nothing in this lease shall be construed as relieving Lessor from liability for damage to or destruction of property of the United States of America caused by the willful or negligent act or omission of Lessor.

18. 552.270-8 - COMPLIANCE WITH APPLICABLE LAW (SEP 1999)

Lessor shall comply with all Federal, state and local laws applicable to the Lessor as owner or lessor, or both, of the building or premises, including, without limitation, laws applicable to the construction, ownership, alteration or operation of both or either thereof, and will obtain all necessary permits, licenses and similar items at Lessor's expense. The Government will comply with all Federal state and local laws applicable to and enforceable against it as a tenant under this lease; provided that nothing in this lease shall be construed as a waiver of any sovereign immunity of the Government. This lease shall be governed by Federal law.

19. 552.270-12 - ALTERATIONS (SEP 1999)

The Government shall have the right during the existence of this lease to make alterations, attach fixtures, and erect structures or signs in or upon the premises hereby leased, which fixtures, additions or structures so placed in, on, upon, or attached to the said premises shall be and remain the property of the Government and may be removed or otherwise disposed of by the Government. If the lease contemplates that the Government is the sole occupant of the building, for purposes of this clause, the leased premises include the land on which the building is sited and the building itself. Otherwise, the Government shall have the right to tie into or make any physical connection with any structure located on the property as is reasonably necessary for appropriate utilization of the leased space.

20. 552.270-29 - ACCEPTANCE OF SPACE (SEP 1999)

(a) When the Lessor has completed all alterations, improvements, and repairs necessary to meet the requirements of the lease, the Lessor shall notify the Contracting Officer. The Contracting Officer or designated representative shall promptly inspect the space.

(b) The Government will accept the space and the lease term will begin after determining that the space is substantially complete and contains the required ANSI/BOMA Usable square footage as indicated in the paragraph of this solicitation entitled "Amount and Type of Space."

21. 552.270-9 - INSPECTION - RIGHT OF ENTRY (SEP 1999)

(a) At any time and from time to time after receipt of an offer (until the same has been duly withdrawn or rejected), after acceptance thereof and during the term, the agents, employees and contractors of the Government may, upon reasonable prior notice to Offeror or Lessor, enter upon the offered premises or the premises, and all other areas of the building access to which is necessary to accomplish the purposes of entry, to determine the potential or actual compliance by the Offeror or Lessor with the requirements of the solicitation or this lease, which purposes shall include, but not be limited to: (1) inspecting, sampling and analyzing of suspected asbestos-containing materials and air monitoring for asbestos fibers; (2) inspecting the heating, ventilation and air conditioning system, maintenance records, and mechanical rooms for the offered premises or the premises; (3) inspecting for any leaks, spills, or other potentially hazardous conditions which may involve tenant exposure to hazardous or toxic substances; and (4) inspecting for any current or past hazardous waste operations, to ensure that appropriate mitigative actions were taken to alleviate any environmentally unsound activities in accordance with Federal, State and local law.

(b) Nothing in this clause shall be construed to create a Government duty to inspect for toxic materials or to impose a higher standard of care on the Government than on other lessees. The purpose of this clause is to promote the ease with which the Government may inspect the building. Nothing in this clause shall act to relieve the Lessor of any duty to inspect or liability which might arise as a result of Lessor's failure to inspect for or correct a hazardous condition.

22. 552.232-75 - PROMPT PAYMENT (SEP 1999)

The Government will make payments under the terms and conditions specified in this clause. Payment shall be considered as being made on the day a check is dated or an electronic funds transfer is made. All days referred to in this clause are calendar days, unless otherwise specified.

(a) Payment due date.

(1) Rental payments. Rent shall be paid monthly in arrears and will be due on the first workday of each month, and only as provided for by the lease.
- (i) When the date for commencement of rent falls on the 15th day of the month or earlier, the initial monthly rental payment under this contract shall become due on the first workday of the month following the month in which the commencement of the rent is effective.
- (ii) When the date for commencement of rent falls after the 15th day of the month, the initial monthly rental payment under this contract shall become due on the first workday of the second month following the month in which the commencement of the rent is effective.

(2) Other payments. The due date for making payments other than rent shall be the later of the following two events:
- (i) The 30th day after the designated billing office has received a proper invoice from the Contractor.
- (ii) The 30th day after Government acceptance of the work or service. However, if the designated billing office fails to annotate the invoice with the actual date of receipt, the invoice payment due date shall be deemed to be the 30th day after the Contractor's invoice is dated, provided a proper invoice is received and there is no disagreement over quantity, quality, or Contractor compliance with contract requirements.

(b) Invoice and inspection requirements for payments other than rent.

(1) The Contractor shall prepare and submit an invoice to the designated billing office after completion of the work. A proper invoice shall include the following items:
- (i) Name and address of the Contractor.
- (ii) Invoice date.
- (iii) Lease number.
- (iv) Government's order number or other authorization.
- (v) Description, price, and quantity of work or services delivered.
- (vi) Name and address of Contractor official to whom payment is to be sent (must be the same as that in the remittance address in the lease or the order.)
- (vii) Name (where practicable), title, phone number, and mailing address of person to be notified in the event of a defective invoice.

(2) The Government will inspect and determine the acceptability of the work performed or services delivered within 7 days after the receipt of a proper invoice or notification of completion of the work or services unless a different period is specified at the time the order is placed. If actual acceptance occurs later, for the purpose of determining the payment due date and calculation of interest, acceptance will be deemed to occur on the last day of the 7-day inspection period. If the work or service is rejected for failure to conform to the technical requirements of the contract, the 7 days will be counted beginning with receipt of a new invoice or notification. In either case, the Contractor is not entitled to any payment or interest unless actual acceptance by the Government occurs.

(c) Interest Penalty.

(1) An interest penalty shall be paid automatically by the Government, without request from the Contractor, if payment is not made by the due date.

(2) The interest penalty shall be at the rate established by the Secretary of the Treasury under Section 12 of the Contract Disputes Act of 1978 (41 U.S.C. 611) that is in effect on the day after the due date. This rate is referred to as the "Renegotiation Board Interest Rate," and it is published in the Federal Register semiannually on or about January 1 and July 1. The interest penalty shall accrue daily on the payment amount approved by the Government and be compounded in 30-day increments inclusive from the first day after the due date through the payment date.

(3) Interest penalties will not continue to accrue after the filing of a claim for such penalties under the clause at 52.233-1, Disputes, or for more than 1 year. Interest penalties of less than $1.00 need not be paid.

(4) Interest penalties are not required on payment delays due to disagreement between the Government and Contractor over the payment amount or other issues involving contract compliance or on amounts temporarily withheld or retained in accordance

with the terms of the contract. Claims involving disputes, and any interest that may be payable, will be resolved in accordance with the clause at 52.233-1, Disputes.

23. 552.232-76 - ELECTRONIC FUNDS TRANSFER PAYMENT (SEP 1999) (Variation)

(a) The Government will make payments under this lease by electronic funds transfer (EFT). After award, but no later than 30 days before the first payment, the Lessor shall designate a financial institution for receipt of EFT payments, and shall submit this designation to the Contracting Officer or other Government official, as directed.

(b) The Lessor shall provide the following information:

(1) The lease number to which this notice applies.
(2) The American Bankers Association 9-digit identifying number for wire transfers of the financing institution receiving payment if the institution has access to the Federal Reserve Communications System.
(3) Number of account to which funds are to be deposited.
(4) Type of depositor account ("C" for checking, "S" for savings).
(5) If the Lessor is a new enrollee to the EFT system, a completed "Payment Information Form," SF 3881.

(c) In the event the Lessor, during the performance of this contract, elects to designate a different financial institution for the receipt of any payment made using EFT procedures, notification of such change and the required information specified in (b), above must be received by the appropriate Government official no later than 30 days prior to the date such change is to become effective.

(d) The documents furnishing the information required in this clause must be dated and contain the signature, title, and telephone number of the Lessor or an authorized representative designated by the Lessor, as well as the Lessor's name and lease number.

(e) Lessor failure to properly designate a financial institution or to provide appropriate payee bank account information may delay payments of amounts otherwise properly due.

24. 552.232-70 - INVOICE REQUIREMENTS (VARIATION) (SEP 1999)

(This clause applies to payments other than rent.)

(a) Invoices shall be submitted in an original only, unless otherwise specified, to the designated billing office specified in this contract or order.

(b) Invoices must include the Accounting Control Transaction (ACT) number provided below or on the order.

ACT Number (to be supplied on individual orders)

(c) If information or documentation in addition to that required by the Prompt Payment clause of this contract is required in connection with an invoice for a particular order, the order will indicate what information or documentation must be submitted.

25. 52.232-23 - ASSIGNMENT OF CLAIMS (JAN 1986)

(a) The Contractor, under the Assignment of Claims Act, as amended, 31 USC 3727, 41 USC 15 (hereafter referred to as the "the Act"), may assign its rights to be paid amounts due or to become due as a result of the performance of this contract to a bank, trust company, or other financing institution, including any Federal lending agency. The assignee under such an assignment may thereafter further assign or reassign its right under the original assignment to any type of financing institution described in the preceding sentence.

(b) Any assignment or reassignment authorized under the Act and this clause shall cover all unpaid amounts payable under this contract, and shall not be made to more than one party, except that an assignment or reassignment may be made to one party as agent or trustee for two or more parties participating in the financing of this contract.

(c) The Contractor shall not furnish or disclose to any assignee under this contract any classified document (including this contract) or information related to work under this contract until the Contracting Officer authorizes such action in writing.

26. 552.270-20 - PAYMENT (SEP 1999) (VARIATION)

(a) When space is offered and accepted, the ANSI/BOMA Usable square footage delivered will be confirmed by:

(1) the Government's measurement of plans submitted by the successful Offeror as approved by the Government, and an inspection of the space to verify that the delivered space is in conformance with such plans or

(2) a mutual on-site measurement of the space, if the Contracting Officer determines that it is necessary.

(b) Payment will not be made for space which is in excess of the amount of ANSI/BOMA Usable square footage stated in the lease.

(c) If it is determined that the amount of ANSI/BOMA Usable square footage actually delivered is less than the amount agreed to in the lease, the lease will be modified to reflect the amount of Usable space delivered and the annual rental will be adjusted as follows:

Usable square feet not delivered multiplied by the ANSI/BOMA Usable square foot (USF) rate equals the reduction in annual rent. The rate per USF is determined by dividing the total annual rental by the Usable square footage set forth in the lease.

USF Not Delivered X Rate per USF = Reduction in Annual Rent.

27. 552.203-5 - COVENANT AGAINST CONTINGENT FEES (FEB 1990)

(a) The Contractor warrants that no person or agency has been employed or retained to solicit or obtain this contract upon an agreement or understanding for a contingent fee, except a bona fide employee or agency. For breach or violation of this warranty, the Government shall have the right to annul this contract without liability or, in its discretion, to deduct from the contract price or consideration, or otherwise recover the full amount of the contingent fee.

(b) "Bona fide agency," as used in this clause, means an established commercial or selling agency (including licensed real estate agents or brokers), maintained by a Contractor for the purpose of securing business, that neither exerts nor proposes to exert improper influence to solicit or obtain Government contracts nor holds itself out as being able to obtain any Government contract or contracts through improper influence.

"Bona fide employee," as used in this clause, means a person, employed by a Contractor and subject to the Contractor's supervision and control as to time, place, and manner of performance, who neither exerts nor proposes to exert improper influence to solicit or obtain Government contracts nor holds out as being able to obtain any Government contract or contracts through improper influence.

"Contingent fee," as used in this clause, means any commission, percentage, brokerage, or other fee that is contingent upon the success that a person or concern has in securing a Government contract.

"Improper influence," as used in this clause, means any influence that induces or tends to induce a Government employee or officer to give consideration or to act regarding a Government contract on any basis other than the merits of the matter.

28. 52.203-7 - ANTI-KICKBACK PROCEDURES (JUL 1995)

(Applies to leases which exceed $100,000 average net annual rental, including option periods.)

(a) Definitions.

"Kickback," as used in this clause, means any money, fee, commission, credit, gift, gratuity, thing of value, or compensation of any kind which is provided, directly or indirectly, to any prime Contractor, prime Contractor employee, subcontractor, or subcontractor employee for the purpose of improperly obtaining or rewarding favorable treatment in connection with a prime contract or in connection with a subcontract relating to a prime contract.

"Person," as used in this clause, means a corporation, partnership, business association of any kind, trust, joint-stock company, or individual.

"Prime contract," as used in this clause, means a contract or contractual action entered into by the United States for the purpose of obtaining supplies, materials, equipment, or services of any kind.

"Prime Contractor," as used in this clause, means a person who has entered into a prime contract with the United States.

"Prime Contractor employee," as used in this clause, means any officer, partner, employee, or agent of a prime Contractor.

"Subcontract," as used in this clause, means a contract or contractual action entered into by a prime Contractor or subcontractor for the purpose of obtaining supplies, materials, equipment, or services of any kind under a prime contract.

"Subcontractor," as used in this clause, (1) means any person, other than the prime Contractor, who offers to furnish or furnishes any supplies, materials, equipment, or services of any kind under a prime contract or a subcontract entered into in connection with such prime contract, and (2) includes any person who offers to furnish or furnishes general supplies to the prime Contractor or a higher tier subcontractor.

"Subcontractor employee," as used in this clause, means any officer, partner, employee, or agent of a subcontractor.

(b) The Anti-Kickback Act of 1986 (41 U.S.C. 51-58) (the Act), prohibits any person from--

(1) Providing or attempting to provide or offering to provide any kickback;
(2) Soliciting, accepting, or attempting to accept any kickback; or
(3) Including, directly or indirectly, the amount of any kickback in the contract price charged by a prime Contractor to the United States or in the contract price charged by a subcontractor to a prime Contractor or higher tier subcontractor.

(c) (1) The Contractor shall have in place and follow reasonable procedures designed to prevent and detect possible violations described in paragraph (b) of this clause in its own operations and direct business relationships.
(2) When the Contractor has reasonable grounds to believe that a violation described in paragraph (b) of this clause may have occurred, the Contractor shall promptly report in writing the possible violation. Such reports shall be made to the inspector general of the contracting agency, the head of the contracting agency if the agency does not have an inspector general, or the Department of Justice.
(3) The Contractor shall cooperate fully with any Federal agency investigating a possible violation described in paragraph (b) of this clause.
(4) The Contracting Officer may (i) offset the amount of the kickback against any monies owed by the United States under the prime contract and/or (ii) direct that the Prime Contractor withhold from sums owed a subcontractor under the prime contract, the amount of the kickback. The Contracting Officer may order that monies withheld under subdivision (c)(4)(ii) of this clause be paid over to the Government unless the Government has already offset those monies under subdivision (c)(4)(i) of this clause. In the either case, the Prime Contractor shall notify the Contracting Officer when the monies are withheld.
(5) The Contractor agrees to incorporate the substance of this clause, including subparagraph (c)(5) but excepting subparagraph (c)(1), in all subcontracts under this contract which exceed $100,000.

29. 52.223-6 DRUG-FREE WORKPLACE (JAN 1997)

(a) Definitions. As used in this clause --

"Controlled substance" means a controlled substance in schedules I through V of section 202 of the Controlled Substances Act (21 U.S.C. 812) and as further defined in regulation at 21 CFR 1308.11 - 1308.15.

"Conviction" means a finding of guilt (including a plea of nolo contendere) or imposition of sentence, or both, by any judicial body charged with the responsibility to deter-mine violations of the Federal or State criminal drug statutes.

"Criminal drug statute" means a Federal or non-Federal criminal statute involving the manufacture, distribution, dispensing, possession, or use of any controlled substance.

"Drug-free workplace" means the site(s) for the performance of work done by the Contractor in connection with a specific contract at which employees of the Contractor are prohibited from engaging in the unlawful manufacture, distribution, dispensing, possession, or use of a controlled substance.

"Employee" means an employee of a Contractor directly engaged in the performance of work under a Government contract. "Directly engaged" is defined to include all direct cost employees and any other Contractor employee who has other than a minimal impact or involvement in contract performance.

"Individual" means an offeror/contractor that has no more than one employee including the offeror/contractor.

(b) The Contractor, if other than an individual, shall-- within 30 days after award (unless a longer period is agreed to in writing for contracts of 30 days or more performance duration), or as soon as possible for contracts of less than 30 days performance duration--

(1) Publish a statement notifying its employees that the unlawful manufacture, distribution, dispensing, possession, or use of a controlled substance is prohibited in the Contractor's workplace and specifying the actions that will be taken against employees for violations of such prohibition;

(2) Establish an ongoing drug-free awareness program to inform such employees about--

(i) The dangers of drug abuse in the workplace;
(ii) The Contractor's policy of maintaining a drug-free workplace;
(iii) Any available drug counseling, rehabilitation, and employee assistance programs; and
(iv) The penalties that may be imposed upon employees for drug abuse violations occurring in the workplace;

(3) Provide all employees engaged in performance of the contract with a copy of the statement required by subparagraph (b)(1) of this clause;

(4) Notify such employees in writing in the statement required by subparagraph (b)(1) of this clause that, as a condition of continued employment on this contract, the employee will--

(i) Abide by the terms of the statement; and
(ii) Notify the employer in writing of the employee's conviction under a criminal drug statute for a violation occurring in the workplace no later than 5 days after such conviction.

(5) Notify the Contracting Officer in writing within 10 days after receiving notice under subdivision (b)(4)(ii) of this clause, from an employee or otherwise receiving actual notice of such conviction. The notice shall include the position title of the employee;

(6) Within 30 days after receiving notice under subdivision (b)(4)(ii) of this clause of a conviction, take one of the following actions with respect to any employee who is convicted of a drug abuse violation occurring in the workplace:

(i) Taking appropriate personnel action against such employee, up to and including termination; or

(ii) Require such employee to satisfactorily participate in a drug abuse assistance or rehabilitation program approved for such purposes by a Federal, State, or local health, law enforcement, or other appropriate agency; and

(7) Make a good faith effort to maintain a drug-free workplace through implementation of subparagraphs (b)(1) though (b)(6) of this clause.

(c) The Contractor, if an individual, agrees by award of the contract or acceptance of a purchase order, not to engage in the unlawful manufacture, distribution, dispensing, possession, or use of a controlled substance while performing this contract.

(d) In addition to other remedies available to the Government, the Contractor's failure to comply with the requirements of paragraph (b) or (c) of this clause may, pursuant to FAR 23.506, render the Contractor subject to suspension of contract payments, termination of the contract for default, and suspension or debarment.

30. 552.203-70 - PRICE ADJUSTMENT FOR ILLEGAL OR IMPROPER ACTIVITY (SEP 1999)

(Applies to leases which exceed $100,000.)

(a) If the head of the contracting activity (HCA) or his or her designee determines that there was a violation of subsection 27(a) of the Office of Federal Procurement Policy Act, as amended (41 U.S.C. 423), as implemented in the Federal Acquisition Regulation, the Government, at its election, may--

(1) Reduce the monthly rental under this lease by 5 percent of the amount of the rental for each month of the remaining term of the lease, including any option periods, and recover 5 percent of the rental already paid;
(2) Reduce payments for alterations not included in monthly rental payments by 5 percent of the amount of the alterations agreement; or
(3) Reduce the payments for violations by a Lessor's subcontractor by an amount not to exceed the amount of profit or fee reflected in the subcontract at the time the subcontract was placed.

(b) Prior to making a determination as set forth above, the HCA or designee shall provide to the Lessor a written notice of the action being considered and the basis therefor. The Lessor shall have a period determined by the agency head or designee, but not less than 30 calendar days after receipt of such notice, to submit in person, in writing, or through a representative, information and argument in opposition to the proposed reduction. The agency head or designee may, upon good cause shown, determine to deduct less than the above amounts from payments.

(c) The rights and remedies of the Government specified herein are not exclusive, and are in addition to any other rights and remedies provided by law or under this lease.

31. 52.215-10 - PRICE REDUCTION FOR DEFECTIVE COST OR PRICING DATA (OCT 1997)

(Applies when cost or pricing data are required for work or service exceeding $500,000.)

(a) If any price, including profit or fee, negotiated in connection with this contract, or any cost reimbursable under this contract, was increased by any significant amount because—

(1) The Contractor or a subcontractor furnished cost or pricing data that were not complete, accurate, and current as certified in its Certificate of Current Cost or Pricing Data;
(2) A subcontractor or prospective subcontractor furnished the Contractor cost or pricing data that were not complete, accurate, and current as certified in the Contractor's Certificate of Current Cost or Pricing Data; or
(3) Any of these parties furnished data of any description that were not accurate, the price or cost shall be reduced accordingly and the contract shall be modified to reflect the reduction.

(b) Any reduction in the contract price under paragraph (a) of this clause due to defective data from a prospective subcontractor that was not subsequently awarded the subcontract shall be limited to the amount, plus applicable overhead and profit markup, by which (1) the actual subcontract or (2) the actual cost to the Contractor, if there was no subcontract, was less than the prospective subcontract cost estimate submitted by the Contractor; *provided*, that the actual subcontract price was not itself affected by defective cost or pricing data.

(c) (1) If the Contracting Officer determines under paragraph (a) of this clause that a price or cost reduction should be made, the Contractor agrees not to raise the following matters as a defense:
(i) The Contractor or subcontractor was a sole source supplier or otherwise was in a superior bargaining position and thus the price of the contract would not have been modified even if accurate, complete, and current cost or pricing data had been submitted.
(ii) The Contracting Officer should have known that the cost or pricing data in issue were defective even though the Contractor or subcontractor took no affirmative action to bring the character of the data to the attention of the Contracting Officer.
(iii) The contract was based on an agreement about the total cost of the contract and there was no agreement about the cost of each item procured under the contract.
(iv) The Contractor or subcontractor did not submit a Certificate of Current Cost or Pricing Data.
(2) (i) Except as prohibited by subdivision (c)(2)(ii) of this clause, an offset in an amount determined appropriate by the Contracting Officer based upon the facts shall be allowed against the amount of a contract price reduction if--
(A) The Contractor certifies to the Contracting Officer that, to the best of the Contractor's knowledge and belief, the Contractor is entitled to the offset in the amount requested; and
(B) The Contractor proves that the cost or pricing data were available before the "as of" date specified on its Certificate of Current Cost or Pricing Data, and that the data were not submitted before such date.

(ii) An offset shall not be allowed if--
(A) The understated data were known by the Contractor to be understated before the "as of" date specified on its Certificate of Current Cost or Pricing Data; or
(B) The Government proves that the facts demonstrate that the contract price would not have increased in the amount to be offset even if the available data had been submitted before the "as of" date specified on its Certificate of Current Cost or Pricing Data.

(d) If any reduction in the contract price under this clause reduces the price of items for which payment was made prior to the date of the modification reflecting the price reduction, the Contractor shall be liable to and shall pay the United States at the time such overpayment is repaid--

(1) Simple interest on the amount of such overpayment to be computed from the date(s) of overpayment to the Contractor to the date the Government is repaid by the Contractor at the applicable underpayment rate effective for each quarter prescribed by the Secretary of the Treasury under 26 U.S.C. 6621(a)(2); and
(2) A penalty equal to the amount of the overpayment, if the Contractor or subcontractor knowingly submitted cost or pricing data that were incomplete, inaccurate, or noncurrent.

32. 552.270-13 - PROPOSALS FOR ADJUSTMENT (SEP 1999)

(a) The Contracting Officer may, from time to time during the term of this lease, require changes to be made in the work or services to be performed and in the terms or conditions of this lease. Such changes will be required under the Changes clause.

(b) If the Contracting Officer makes a change within the general scope of the lease, the Lessor shall submit, in a timely manner, an itemized cost proposal for the work to be accomplished or services to be performed when the cost exceeds $100,000. The proposal, including all subcontractor work, will contain at least the following details--

(1) Material quantities and unit costs;
(2) Labor costs (identified with specific item or material to be placed or operation to be performed;
(3) Equipment costs;
(4) Worker's compensation and public liability insurance;
(5) Overhead;
(6) Profit; and
(7) Employment taxes under FICA and FUTA.

(c) The following Federal Acquisition Regulation (FAR) provisions also apply to all proposals exceeding $500,000 in cost --

(1) The Lessor shall provide cost or pricing data including subcontractor cost or pricing data (48 CFR 15.403-4) and
(2) The Lessor's representative, all Contractors, and subcontractors whose portion of the work exceeds $500,000 must sign and return the "Certificate of Current Cost or Pricing Data" (48 CFR 15.406-2).

(d) Lessors shall also refer to 48 CFR Part 31, Contract Cost Principles, for information on which costs are allowable, reasonable, and allocable in Government work.

33. 552.270-14 - CHANGES (SEP 1999) (VARIATION)

(a) The Contracting Officer may at any time, by written order, make changes within the general scope of this lease in any one or more of the following:

(1) Specifications (including drawings and designs);
(2) Work or services;
(3) Facilities or space layout; or
(4) Amount of space, provided the Lessor consents to the change.

(b) If any such change causes an increase or decrease in Lessor's cost of or the time required for performance under this lease, whether or not changed by the order, the Contracting Officer shall modify this lease to provide for one or more of the following:

(1) A modification of the delivery date;
(2) An equitable adjustment in the rental rate;
(3) A lump sum equitable adjustment; or

(4) An equitable adjustment of the annual operating costs per ANSI/BOMA Usable square foot specified in this lease.

(c) The Lessor shall assert its right to an adjustment under this clause within 30 days from the date of receipt of the change order and shall submit a proposal for adjustment. Failure to agree to any adjustment shall be a dispute under the Disputes clause. However, nothing in this clause shall excuse the lessor from proceeding with the change as directed.

(d) Absent such written change order, the Government shall not be liable to Lessor under this clause.

34. 552.215-70 - EXAMINATION OF RECORDS BY GSA (FEB 1996)

The Contractor agrees that the Administrator of General Services, or any duly authorized representative shall, until the expiration of 3 years after final payment under this contract, or of the time periods for the particular records specified in Subpart 4.7 of the Federal Acquisition Regulation (48 CFR 4.7), whichever expires earlier, have access to and the right to examine any books, documents, papers, and records of the Contractor involving transactions related to this contract or compliance with any clauses thereunder. The Contractor further agrees to include in all its subcontracts hereunder a provision to the effect that the subcontractor agrees that the Administrator of General Services, or any duly authorized representatives shall, until the expiration of 3 years after final payment under the subcontract, or of the time periods for the particular records specified in Subpart 4.7 of the Federal Acquisition Regulation (48 CFR 4.7), whichever expires earlier, have access to and the right to examine any books, documents, papers, and records of such subcontractor, involving transactions related to the subcontract or compliance with any clauses thereunder. The term "subcontract" as used in this clause excludes (a) purchase orders not exceeding $100,000 and (b) subcontracts or purchase orders for public utility services at rates established for uniform applicability to the general public.

35. 52.215-2 - AUDIT AND RECORDS—NEGOTIATION (JUN 1999)

(a) As used in this clause, "records" includes books, documents, accounting procedures and practices, and other data, regardless of type and regardless of whether such items are in written form, in the form of computer data, or in any other form.

(b) Examination of costs. If this is a cost-reimbursement, incentive, time-and-materials, labor-hour, or price redeterminable contract, or any combination of these, the Contractor shall maintain and the Contracting Officer, or an authorized representative of the Contracting Officer, shall have the right to examine and audit all records and other evidence sufficient to reflect properly all costs claimed to have been incurred or anticipated to be incurred directly or indirectly in performance of this contract. This right of examination shall include inspection at all reasonable times of the Contractor's plants, or parts of them, engaged in performing the contract.

(c) Cost or pricing data. If the Contractor has been required to submit cost or pricing data in connection with any pricing action relating to this contract, the Contracting Officer, or an authorized representative of the Contracting Officer, in order to evaluate the accuracy, completeness, and currency of the cost or pricing data, shall have the right to examine and audit all of the Contractor's records, including computations and projections, related to—

(1) The proposal for the contract, subcontract, or modification;
(2) The discussions conducted on the proposal(s), including those related to negotiating;
(3) Pricing of the contract, subcontract, or modification; or
(4) Performance of the contract, subcontract or modification.

(d) Comptroller General—

(1) The Comptroller General of the United States, or an authorized representative, shall have access to and the right to examine any of the Contractor's directly pertinent records involving transactions related to this contract or a subcontract hereunder.
(2) This paragraph may not be construed to require the Contractor or subcontractor to create or maintain any record that the Contractor or subcontractor does not maintain in the ordinary course of business or pursuant to a provision of law.

(e) Reports. If the Contractor is required to furnish cost, funding, or performance reports, the Contracting Officer or an authorized representative of the Contracting Officer shall have the right to examine and audit the supporting records and materials, for the purpose of evaluating—

(1) The effectiveness of the Contractor's policies and procedures to produce data compatible with the objectives of these reports; and

(2) The data reported.

(f) Availability. The Contractor shall make available at its office at all reasonable times the records, materials, and other evidence described in paragraphs (a), (b), ©, (d), and (e) of this clause, for examination, audit, or reproduction, until 3 years after final payment under this contract or for any shorter period specified in Subpart 4.7, Contractor Records Retention, of the Federal Acquisition Regulation (FAR), or for any longer period required by statute or by other clauses of this contract. In addition—

(1) If this contract is completely or partially terminated, the Contractor shall make available the records relating to the work terminated until 3 years after any resulting final termination settlement; and
(2) The Contractor shall make available records relating to appeals under the Disputes clause or to litigation or the settlement of claims arising under or relating to this contract until such appeals, litigation, or claims are finally resolved.

(g) The Contractor shall insert a clause containing all the terms of this clause, including this paragraph (g), in all subcontracts under this contract that exceed the simplified acquisition threshold, and—

(1) That are cost-reimbursement, incentive, time-and-materials, labor-hour, or price-redeterminable type or any combination of these;
(2) For which cost or pricing data are required; or
(3) That require the subcontractor to furnish reports as discussed in paragraph (e) of this clause.

The clause may be altered only as necessary to identify properly the contracting parties and the Contracting Officer under the Government prime contract.

36. 52.233-1 - DISPUTES (DEC 1998)

(a) This contract is subject to the Contract Disputes act of 1978, as amended (41 U.S.C. 601-613

(b) Except as provided in the Act, all disputes arising under or relating to this contract shall be resolved under this clause.

(c) "Claim," as used in this clause, means a written demand or written assertion by one of the contracting parties seeking, as a matter of right, the payment of money in a sum certain, the adjustment or interpretation of contract terms, or other relief arising under or relating to this contract. A claim arising under a contract, unlike a claim relating to that contract, is a claim that can be resolved under a contract clause that provides for the relief sought by the claimant. However, a written demand or written assertion by the Contractor seeking the payment of money exceeding $100,000 is not a claim under the Act until certified as required by subparagraph (d)(2) of this clause. A voucher, invoice, or other routine request for payment that is not in dispute when submitted is not a claim under the Act. The submission may be converted to a claim under the Act, by complying with the submission and certification requirements of this clause, if it is disputed either as to liability or amount or is not acted upon in a reasonable time.

(d) (1) A claim by the Contractor shall be made in writing and, unless otherwise stated in this contract, submitted within 6 years after accrual of the claim to the Contracting Officer for a written decision. A claim by the Government against the Contractor shall be subject to a written decision by the Contracting Officer.
(2) (i) The Contractor shall provide the certification specified in paragraph (d)(2)(iii) of this clause when submitting any claim exceeding $100,000.
(ii) The certification requirement does not apply to issues in controversy that have not been submitted as all or part of a claim.
(iii) The certification shall state as follows: "I certify that the claim is made in good faith; that the supporting data are accurate and complete to the best of my knowledge and belief; that the amount requested accurately reflects the contract adjustment for which the Contractor believes the Government is liable; and that I am duly authorized to certify the claim on behalf of the Contractor."
(3) The certification may be executed by any person duly authorized to bind the Contractor with respect to the claim.

(e) For Contractor claims of $100,000 or less, the Contracting Officer must, if requested in writing by the Contractor, render a decision within 60 days of the request. For Contractor-certified claims over $100,000, the Contracting Officer must, within 60 days, decide the claim or notify the Contractor of the date by which the decision will be made.

(f) The Contracting Officer's decision shall be final unless the Contractor appeals or files a suit as provided in the Act.

(g) If the claim by the Contractor is submitted to the Contracting Officer or a claim by the Government is presented to the Contractor, the parties, by mutual consent, may agree to use alternative disputes resolution (ADR). If the Contractor refuses an offer for ADR, the Contractor shall inform the Contracting Officer, in writing, of the Contractor's specific reasons for rejecting the offer.

(h) The Government shall pay interest on the amount found due and unpaid from (1) the date that the Contracting Officer receives the claim (certified if required); or (2) the date that payment otherwise would be due, if that date is later, until the date of payment. With regard to claims having defective certifications, as defined in FAR 33.201, interest shall be paid from the date that the Contracting Officer initially receives the claim. Simple interest on claims shall be paid at the rate, fixed by the Secretary of the Treasury as provided in the Act, which is applicable to the period during which the Contracting Officer receives the claim and then at the rate applicable for each 6-month period as fixed by the Treasury Secretary during the pendency of the claim.

(i) The Contractor shall proceed diligently with performance of this contract, pending final resolution of any request for relief, claim, appeal, or action arising under the contract, and comply with any decision of the Contracting Officer.

37. 52.222-26 - EQUAL OPPORTUNITY (FEB 1999)

(a) If, during any 12-month period (including the 12 months preceding the award of this contract), the Contractor has been or is awarded nonexempt Federal contracts and/or subcontracts that have an aggregate value in excess of $10,000, the Contractor shall comply with subparagraphs (b)(1) through (11) below. Upon request, the Contractor shall provide information necessary to determine the applicability of this clause.

(b) During performing this contract, the Contractor agrees as follows:

(1) The Contractor shall not discriminate against any employee or applicant for employment because of race, color, religion, sex, or national origin. However, it shall not be a violation of this clause for the Contractor to extend a publicly announced preference in employment to Indians living on or near an Indian reservation, in connection with employment opportunities on or near an Indian reservation, as permitted by 41 CFR 60-1.5.

(2) The Contractor shall take affirmative action to ensure the applicants are employed, and that employees are treated during employment, without regard to their race, color, religion, sex, or national origin. This shall include, but not be limited to, (i) employment, (ii) upgrading, (iii) demotion, (iv) transfer, (v) recruitment or recruitment advertising, (vi) layoff or termination, (vii) rates of pay or other forms of compensation, and (viii) selection for training, including apprenticeship.

(3) The Contractor shall post in conspicuous places available to employees and applicants for employment the notices to be provided by the Contracting Officer that explain this clause.

(4) The Contractor shall, in all solicitations or advertisements for employees placed by or on behalf of the Contractor, state that all qualified applicants will receive consideration for employment without regard to race, color, religion, sex, or national origin.

(5) The Contractor shall send, to each labor union or representative of workers with which it has a collective bargaining agreement or other contract or understanding, the notice to be provided by the Contracting Officer advising the labor union or workers' representative of the Contractor's commitments under this clause, and post copies of the notice in conspicuous places available to employees and applicants for employment.

(6) The Contractor shall comply with Executive Order 11246, as amended, and the rules, regulations, and orders of the Secretary of Labor.

(7) The Contractor shall furnish to the contracting agency all information required by Executive Order 11246, as amended, and by the rules, regulations, and orders of the Secretary of Labor. Standard Form 100 (EEO-1), or any successor form, as prescribed in 41 CFR part 60-1. Unless the Contractor has filed within the 12 months preceding the date of contract award, the Contractor shall, within 30 days after contract award, apply to either the regional Office of Federal Contract Compliance Programs (OFCCP) or the local office of the Equal Employment Opportunity Commission for the necessary forms

(8) The Contractor shall permit access to its premises, during normal business hours, by thecontracting agency or the OFCCP for the purpose of conducting on-site compliance evaluations and complaint investigations. The Contractor shall permit the

Government to inspect and copy any books, accounts, records (including computerized records), and other material that may be relevant to the matter under investigation and pertinent to compliance with Executive Order 11246, as amended, and rules and regulations that implement the Executive Order.

(9) If the OFCCP determines that the Contractor is not in compliance with this clause or any rule, regulation, or order of the Secretary of Labor, this contract may be canceled, terminated, or suspended in whole or in part and the Contractor may be declared ineligible for further Government contracts, under the procedures authorized in Executive Order 11246, as amended. In addition, sanctions may be imposed and remedies invoked against the Contractor as provided in Executive Order 11246, as amended, the rules, regulations, and orders of the Secretary of Labor, or as otherwise provided by law.

(10) The Contractor shall include the terms and conditions of subparagraph (b)(1) through (11) of this clause in every subcontract or purchase order that is not exempted by the rules, regulations, or orders of the Secretary of Labor issued under Executive Order 11246, as amended, so that these terms and conditions will be binding upon each subcontractor or vendor.

(11) The Contractor shall take such action with respect to any subcontract or purchase order as the contracting agency may direct as a means of enforcing these terms and conditions, including sanctions for noncompliance; provided, that if the Contractor becomes involved in, or is threatened with, litigation with a subcontractor or vendor as a result of any direction, the Contractor may request the United States to enter into the litigation to protect the interests of the United States.

(c) Notwithstanding any other clause in this contract, disputes relative to this clause will be governed by the procedures in 41 CFR 60-1.1.

38. 52.222-21 – PROHIBITION OF SEGREGATED FACILITIES (FEB 1999)

(a) "Segregated facilities," as used in this clause, means any waiting rooms, work areas, rest rooms and wash rooms, restaurants and other eating areas, time clocks, locker rooms and other storage or dressing areas, parking lots, drinking fountains, recreation or entertainment areas, transportation, and housing facilities provided for employees, that are segregated by explicit directive or are in fact segregated on the basis of race, color, religion, sex, or national origin because of written or oral policies or employee custom. The term does not include separate or single-user rest rooms or necessary dressing or sleeping areas provided to assure privacy between the sexes.

(b) The Contractor agrees that it does not and will not maintain or provide for its employees any segregated facilities at any of its establishments, and that it does not and will not permit its employees to perform their services at any location under its control where segregated facilities are maintained. The Contractor agrees that a breach of this clause is a violation of the Equal Opportunity clause in this contract.

(c) The Contractor shall include this clause in every subcontract and purchase order that isissubject to the Equal Opportunity clause of this contract.

39. 52.222-35 - AFFIRMATIVE ACTION FOR DISABLED VETERANS AND VETERANS OF THE VIETNAM ERA (APR 1998) (DEVIATION)

(a) Definitions.

"Appropriate office of the State employment service system," as used in this clause, means the local office of the Federal-State national system of public employment offices with assigned responsibility for serving the area where the employment opening is to be filled, including the District of Columbia, Guam, Puerto Rico, and the Virgin Islands.

"Positions that will be filled from within the Contractor's organization," as used in this clause, means employment openings for which no consideration will be given to persons outside the Contractor's organization (including any affiliates, subsidiaries, and the parent companies) and includes any openings that the Contractor proposes to fill from regularly establish "recall" lists.

"Employment openings," as used in this clause, includes full-time employment, temporary employment of over 3 days, and part-time employment, but does not include (1) executive and top management positions, (2) positions that will be filled from within the Contractor's organization or under a customary and traditional employer-union hiring arrangement, or (3) openings in an educational institution that are restricted to students of that institution.

"Veteran of the Vietnam era" means a person who--

Served on active duty for a period of more than 180 days, any part of which occurred between August 5, 1964, and May 7, 1975, and was discharged or released therefrom with other than a dishonorable discharge; or

Was discharged or released from active duty for a service-connected disability if any part of such active duty was performed between August 5, 1964, and May 7, 1975.

(b) General.

(1) Regarding any position for which the employee or applicant for employment is qualified, the Contractor shall not discriminate against the individual because the individual is a disabled veteran or veteran of the Vietnam era. The Contractor agrees to take affirmative action to employ, advance in employment, and otherwise treat qualified disabled veterans and veterans of the Vietnam era without discrimination based upon their disability or veterans' status in all employment practices such as--
(i) Employment;
(ii) Upgrading;
(iii) Demotion or transfer;
(iv) Recruitment;
(v) Advertising;
(vi) Layoff or termination;
(vii) Rates of pay or other forms of compensation; and
(viii) Selection for training, including apprenticeship.

(2) The Contractor agrees to comply with the rules, regulations, and relevant orders of the Secretary of Labor (Secretary) issued under the Vietnam Era Veterans' Readjustment Assistance Act of 1972 (the Act), as amended.

(c) Listing openings.

(1) The Contractor agrees to list all employment openings existing at contract award or occurring during contract performance, at an appropriate office of the State employment service system in the locality where the opening occurs. These openings include those occurring at any contractor facility, including one not connected with performing this contract. An independent corporate affiliate is exempt from this requirement.

(2) State and local government agencies holding Federal contracts of $10,000 or more shall also list all their openings with the appropriate office of the State employment service.

(3) The listing of employment openings with the State employment service system is required at least concurrently with using any other recruitment source or effort and involves the obligations of placing a bona fide job order, including accepting referrals of veterans and nonveterans. This listing does not require hiring any particular job applicant or hiring from any particular group of job applicants and is not intended to relieve the Contractor from any requirements of Executive orders or regulations concerning nondiscrimination in employment.

(4) Whenever the Contractor becomes contractually bound to the listing terms of this clause, it shall advise the State employment service system, in each State where it has establishments, of the name and location of each hiring location in the State. As long as the Contractor is contractually bound to these terms and has so advised the State system, it need not advise the State system of subsequent contracts. The Contractor may advise the State system when it is no longer bound by this contract clause.

(d) Applicability.

(1) This clause does not apply to the listing of employment openings which occur and are filled outside the 50 states, the District of Columbia, the Commonwealth of Puerto Rico, Guam, and the Virgin Islands.

(2) The terms of paragraph (c) above of this clause do not apply to openings that the Contractor proposes to fill from within its own organization or under a customary and traditional employer-union hiring arrangement. This exclusion does not apply to a particular opening once an employer decides to consider applicants outside of its own organization or employer-union arrangement for that opening.

(e) Postings.

(1) The Contractor agrees to post employment notices stating (i) the Contractor's obligation under the law to take affirmative action to employ and advance in employment qualified disabled veterans and veterans of the Vietnam era, and (ii) the rights of applicants and employees.

(2) These notices shall be posted in conspicuous places that are available to employees and applicants for employment. They shall be in a form prescribed by the Director, Office of Federal Contract Compliance Programs, Department of Labor (Director), and provided by or through the Contracting Officer.

(3) The Contractor shall notify each labor union or representative of workers with which it has a collective bargaining agreement or other contract understanding, that the Contractor is bound by the terms of the Act, and is committed to take affirmative action to employ, and advance in employment, qualified disabled veterans and veterans of the Vietnam era.

(f) Noncompliance. If the Contractor does not comply with the requirements of this clause, appropriate actions may be taken under the rules, regulations, and relevant orders of the Secretary issued pursuant to the Act.

(g) Subcontracts. The Contractor shall include the terms of this clause in every subcontract or purchase order of $10,000 or more unless exempted by rules, regulations, or orders of the Secretary. The Contractor shall act as specified by the Director to enforce the terms, including action for noncompliance.

40. 52.222-36 - AFFIRMATIVE ACTION FOR WORKERS WITH DISABILITIES (JUN 1998)

(a) General.

(1) Regarding any position for which the employee or applicant for employment is qualified, the Contractor shall not discriminate against any employee or applicant because of physical or mental disability. The Contractor agrees to take affirmative action to employ, advance in employment and otherwise treat qualified individuals with disabilities without discrimination based upon their physical or mental disability in all employment practices such as--
(i) Recruitment, advertising, and job application procedures;
(ii) Hiring, upgrading, promotion, award of tenure, demotion, transfer, layoff, termination, right of return from layoff, and rehiring;
(iii) Rates of pay or any other form of compensation and changes in compensation;
(iv) Job assignments, job classifications, organizational structures, position descriptions, lines of progression, and seniority lists;
(v) Leaves of absence, sick leave, or any other leave;
(vi) Fringe benefits available by virtue of employment, whether or not administered by the Contractor;
(vii) Selection and financial support for training, including apprenticeships, professional meetings, conferences, and other related activities, and selection for leaves of absence to pursue training
(viii) Activities sponsored by the Contractor, including social or recreational programs; and
(ix) Any other term, condition, or privilege of employment

(2) The Contractor agrees to comply with the rules, regulations, and relevant orders of the Secretary of Labor (Secretary) issued under the Rehabilitation Act of 1973 (29 USC 793) (the Act), as amended.

(b) Postings.

(1) The Contractor agrees to post employment notices stating (i) the Contractor's obligation under the law to take affirmative action to employ and advance in employment qualified individuals with disabilities and (ii) the rights of applicants and employees.

(2) These notices shall be posted in conspicuous places that are available to employees and applicants for employment. The Contractor shall ensure that applicants and employees with disabilities are informed of the contents of the notice (e.g., the Contractor may have the notice read to a visually disabled individual, or may lower the posted notice so that it might be read by a person in a wheelchair). The notices shall be in a form prescribed by the Deputy Assistant Secretary for Federal Contract Compliance of the U.S. Department of Labor (Deputy Assistant Secretary) and shall be provided by or through the Contracting Officer.

(3) The Contractor shall notify each labor union or representative of workers with which it has a collective bargaining agreement or other contract understanding, that the Contractor is bound by the terms of Section 503 of the Act and is committed to take affirmative action to employ, and advance in employment, qualified individuals with physical or mental disabilities.

(c) Noncompliance. If the Contractor does not comply with the requirements of this clause, appropriate actions may be taken under the rules, regulations, and relevant orders of the Secretary issued pursuant to the Act.

(d) Subcontracts. The Contractor shall include the terms of this clause in every subcontract or purchase order in excess of $2,500 unless exempted by rules, regulations, or orders of the Secretary. The Contractor shall act as specified by the Director to enforce the terms, including action for noncompliance.

41. 52.222-37 - EMPLOYMENT REPORTS ON DISABLED VETERANS AND VETERANS OF THE VIETNAM ERA (JAN 1999)

(a) Unless the Contractor is a State or local government agency, the Contractor shall report at least annually, as required by the Secretary of Labor, on:

(1) The number of disabled veterans and the number of veterans of the Vietnam era in the workforce of the contractor by job category and hiring location; and
(2) The total number of new employees hired during the period covered by the report, and of that total, the number of special disabled veterans, and the number of veterans of the Vietnam era.

(b) The above items shall be reported by completing the form entitled "Federal Contractor Veterans' Employment Report VETS-100."

(c) Reports shall be submitted no later than September 30 of each year beginning September 30, 1988.

(d) The employment activity report required by paragraph (a)(2) of this clause shall reflect total hires during the most recent 12-month period as of the ending date selected for the employment profile report required by paragraph (a)(1) of this clause. Contractors may select an ending date: (1) As of the end of any pay period during the period January through March 1 of the year the report is due, or (2) as of December 31, if the Contractor has previous written approval from the Equal Employment Opportunity Commission to do so for purposes of submitting the Employer Information Report EEO-1 (Standard Form 100).

(e) The count of veterans reported according to paragraph (a) of this clause shall be based on voluntary disclosure. Each Contractor subject to the reporting requirements at 38 U.S.C. 4212 shall invite all special disabled veterans and veterans of the Vietnam era who wish to benefit under the affirmative action program at 38 U.S.C. 4212 to identify themselves to the Contractor. The invitation shall state that the information is voluntarily provided, that the information will be kept confidential, that disclosure or refusal to provide the information will not subject the applicant or employee to any adverse treatment, and that the information will be used only in accordance with the regulations promulgated under 38 U.S.C. 4212.

(f) Subcontracts. The Contractor shall include the terms of this clause in every subcontract or purchase order of $10,000 or more unless exempted by rules, regulations, or orders of the Secretary.

42 52.209-6 - PROTECTING THE GOVERNMENT'S INTEREST WHEN SUBCONTRACTING WITH CONTRACTORS DEBARRED, SUSPENDED, OR PROPOSED FOR DEBARMENT (AUG 1995)

(a) The Government suspends or debars Contractors to protect the Government's interests. Contractors shall not enter into any subcontract in excess of the small purchase limitation at FAR 13.000 with a Contractor that has been debarred, suspended, or proposed for debarment unless there is a compelling reason to do so.

(b) The Contractor shall require each proposed first-tier subcontractor, whose subcontract will exceed the small purchase limitation at FAR 13.000, to disclose to the Contractor, in writing, whether as of the time of award of the subcontract, the subcontractor, or its principals, is or is not debarred, suspended, or proposed for debarment by the Federal Government.

(c) A corporate officer or designee of the Contractor shall notify the Contracting Officer, in writing, before entering into a subcontract with a party that is debarred, suspended or proposed for debarment (See FAR 9.404 for information on the List of Parties Excluded from Federal Procurement and Nonprocurement Programs). The notice must include the following:

(1) The name of the subcontractor,
(2) The Contractor's knowledge of the reasons for the subcontractor being on the List of Parties Excluded from Federal Procurement and Nonprocurement Programs;
(3) The compelling reason(s) for doing business with the subcontractor notwithstanding its inclusion on the List of Parties Excluded from Federal Procurement and Nonprocurement Programs;

(4) The systems and procedures the Contractor has established to ensure that it is fully protecting the Government's interests when dealing with such subcontractor in view of the specific basis for the party's debarment, suspension, or proposed debarment.

43. 52.215-12 - SUBCONTRACTOR COST OR PRICING DATA (OCT 1997)

(Applies when the clause at FAR 52.215-10 is applicable.)

(a) Before awarding any subcontract expected to exceed the threshold for submission of cost or pricing data at FAR 15.403-4, on the date of agreement on price or the date of award, which ever is later; or before pricing any subcontract modification involving a pricing adjustment expected to exceed the threshold for submission of cost or pricing data at FAR 15.403-4, the Contractor shall require the subcontractor to submit cost or pricing data (actually or by specific identification in writing), unless an exception under FAR 15.403-1 applies.

(b) The Contractor shall require the subcontractor to certify in substantially the form prescribed in FAR 15.406-2 that, to the best of its knowledge and belief, the data submitted under paragraph (a) of this clause were accurate, complete, and current as of the date of agreement on the negotiated price of the subcontract or subcontract modification.

(c) In each subcontract that exceeds the threshold for submission of cost or pricing data at FAR 15.403-4, when entered into, the Contractor shall insert either--

(1) The substance of this clause, including this paragraph (c), if paragraph (a) of this clause requires submission of cost or pricing data for the subcontract; or
(2) The substance of the clause at FAR 52.215-13, Subcontractor Cost or Pricing Data -- Modifications.

44. 52.219-8 - UTILIZATION OF SMALL BUSINESS CONCERNS (OCT 1999)

(Applies to leases which exceed $100,000 average net annual rental, including option periods.)

(a) It is the policy of the United States that small business concerns, HUBZone small business concerns, small business concerns owned and controlled by socially and economically disadvantaged individuals, and small business concerns owned and controlled by women shall have the maximum practicable opportunity to participate in performing contracts let by any Federal agency, including contracts and subcontracts for subsystems, assemblies, components, and related services for major systems. It is further the policy of the United States that its prime contractors establish procedures to ensure the timely payment of amounts due pursuant to the terms of their subcontracts with small business concerns, HUBZone small business concerns, small business concerns owned and controlled by socially and economically disadvantaged individuals, and small business concerns owned and controlled by women.

(b) The Contractor hereby agrees to carry out this policy in the awarding of subcontracts to the fullest extent consistent with efficient contract performance. The Contractor further agrees to cooperate in any studies or surveys as may be conducted by the United States Small Business Administration or the awarding agency of the United States as may be necessary to determine the extent of the Contractor's compliance with this clause.

(c) Definitions. As used in this contract--

(1) "Small business concern" means a small business as defined pursuant to section 3 of the Small Business Act and relevant regulations promulgated pursuant thereto.

(2) "HUBZone small business concern" means a small business concern that appears on the List of Qualified HUBZone Small Business Concerns maintained by the Small Business Administration.

(3) "Small business concern owned and controlled by socially and economically disadvantaged individuals" and "small disadvantaged business concern" mean a small business concern that represents, as part of its offer that--

(i) It has received certification as a small disadvantaged business concern consistent with 13 CFR 124, Subpart B;

(ii) No material change in disadvantaged ownership and control has occurred since its certification;

(iii) Where the concern is owned by one or more individuals, the net worth of each individual upon whom the certification is based does not exceed $750,000 after taking into account the applicable exclusions set forth at 13 CFR 124.104(c)(2); and

(iv) It is identified, on the date of its representation, as a certified small disadvantaged business in the database maintained by the Small Business Administration (PRO-Net).

(4) "Small business concern owned and controlled by women" means a small business concern--

(i) Which is at least 51 percent owned by one or more women, or, in the case of any publicly owned business, at least 51 percent of the stock of which is owned by one or more women; and

(ii) Whose management and daily business operations are controlled by one or more women.

(d) Contractors acting in good faith may rely on written representations by their subcontractors regarding their status as a small business concern, a HUBZone small business concern, a small business concern owned and controlled by socially and economically disadvantaged individuals, or a small business concern owned and controlled by women.

45. 52.219-9 SMALL BUSINESS SUBCONTRACTING PLAN (OCT 1999)

(Applies to leases which exceed $500,000.)

(a) This clause does not apply to small business concerns.

(b) Definitions. As used in this clause--

"Commercial item" means a product or service that satisfies the definition of commercial item in section 2.101 of the Federal Acquisition Regulation.

"Commercial plan" means a subcontracting plan (including goals) that covers the offeror's fiscal year and that applies to the entire production of commercial items sold by either the entire company or a portion thereof (e.g., division, plant, or product line).

"Individual contract plan" means a subcontracting plan that covers the entire contract period (including option periods), applies to a specific contract, and has goals that are based on the offeror's planned subcontracting in support of the specific contract, except that indirect costs incurred for common or joint purposes may be allocated on a prorated basis to the contract.

"Master plan" means a subcontracting plan that contains all the required elements of an individual contract plan, except goals, and may be incorporated into individual contract plans, provided the master plan has been approved.

"Subcontract," means any agreement means any agreement (other than one involving an employer-employee relationship) entered into by a Federal Government prime Contractor or subcontractor calling for supplies or services required for performance of the contract or subcontract.

(c) The offeror, upon request by the Contracting Officer, shall submit and negotiate a subcontracting plan, where applicable, which separately addresses subcontracting with small business, HUBZone small business concerns, small disadvantaged business, and women-owned small business concerns. If the offeror is submitting an individual contract plan, the plan must separately address subcontracting with small business, HUBZone small business, small disadvantaged business, and women-owned small business concerns, with a separate part for the basic contract and separate parts for each option (if any). The plan shall be included in and made a part of the resultant contract. The subcontracting plan shall be negotiated within the time specified by the Contracting Officer. Failure to submit and negotiate the subcontracting plan shall make the offeror ineligible for award of a contract.

(d) The offeror's subcontracting plan shall include the following:

(1) Goals, expressed in terms of percentages of total planned subcontracting dollars, for the use of small business, HUBZone small business, small disadvantaged business, and women-owned small business concerns as subcontractors. The offeror shall include all subcontracts that contribute to contract performance, and may include a

proportionate share of products and services that are normally allocated as indirect costs.

(2) A statement of--
   (i) Total dollars planned to be subcontracted for an individual contract plan; or the offeror's total projected sales, expressed in dollars, and the total value of projected subcontracts to support the sales for a commercial plan;
   (ii) Total dollars planned to be subcontracted to small business concerns;
   (iii) Total dollars planned to be subcontracted to HUBZone small business concerns
   (iv) Total dollars planned to be subcontracted to small disadvantaged business concerns; and
   (v) Total dollars planned to be subcontracted to women-owned small business concerns.

(3) A description of the principal types of supplies and services to be subcontracted, and an identification of the types planned for subcontracting to (i) small business concerns, (ii) HUBZone small business concerns, (iii) small disadvantaged business concerns and (iv) women-owned small business concerns.

(4) A description of the method used to develop the subcontracting goals in paragraph (d)(1) of this clause.

(5) A description of the method used to identify potential sources for solicitation purposes (e.g., existing company source lists, the Procurement Marketing and Access Network (PRO-Net) of the Small Business Administration (SBA), the National Minority Purchasing Council Vendor Information Service, the Research and Information Division of the Minority Business Development Agency in the Department of Commerce, or small, HUBZone, small disadvantaged, and women-owned small business trade associations). A firm may rely on the information contained in PRO-Net as an accurate representation of a concern's size and ownership characteristics for the purposes of maintaining a small, HUBZone, small disadvantaged and women-owned small business source list. Use of PRO-Net as its source list does not relieve a firm of its responsibilities (e.g., outreach, assistance, counseling, or publicizing subcontracting opportunities) in this clause

(6) A statement as to whether or not the offeror included indirect costs in establishing subcontracting goals, and a description of the method used to determine the proportionate share of indirect costs to be incurred with (i) small business concerns, (ii) HUBZone small business concerns, (iii) small disadvantaged business concerns, and (iv) women-owned small business concerns.

(7) The name of the individual employed by the offeror who will administer the offeror's subcontracting program, and a description of the duties of the individual.

(8) A description of the efforts the offeror will make to assure that small business, HUBZone small business, small disadvantaged and women-owned small business concerns have an equitable opportunity to compete for subcontracts.

(9) Assurances that the offeror will include the clause in this contract entitled "Utilization of Small Business Concerns" in all subcontracts that offer further subcontracting opportunities, and that the offeror will require all subcontractors (except small business concerns) that receive subcontracts in excess of $500,000 ($1,000,000 for construction of any public facility) to adopt a subcontracting plan that complies with the requirements of this clause.

(10) Assurances that the offeror will-- (i) cooperate in any studies or surveys as may be required, (ii) submit periodic reports so that the Government can determine the extent of compliance by the offeror with the subcontracting plan, (iii) submit Standard Form (SF) 294, Subcontracting Report for Individual Contracts, and/or SF 295, Summary Subcontract Report, in accordance with the instructions on the forms and in paragraph (j) of this clause, and (iv) ensure that its subcontractors agree to submit Standard Forms 294 and 295.

(11) A recitation of the types of records the offeror will maintain concerning procedures that have been adopted to comply with the requirements and goals in the plan, including establishing source lists; and a description of the offeror's efforts to locate small business, HUBZone small business, small disadvantaged business, and women-owned small business concerns and award subcontracts to them. The records shall include at least the following (on a plant-wide or company-wide basis, unless otherwise indicated):

   (i) Source lists (e.g., PRO-Net), guides, and other data that identify small business, HUBZone small business, small disadvantaged and women-owned small business concerns.
   (ii) Organizations contacted in an attempt to locate sources that are small business, HUBZone small business, small disadvantaged or women-owned small business concerns.
   (iii) Records on each subcontract solicitation resulting in an award of more than $100,000, indicating (A) whether small business concerns were solicited and if not, why not, (B) whether HUBZone small business concerns were solicited

and if not, why not, (C) whether small disadvantaged business concerns were solicited and if not, why not, (D) whether women-owned small business concerns were solicited and if not, why not, and (E) if applicable, the reason award was not made to a small business concern.

(iv) Records of any outreach efforts to contact (A) trade associations, (B) business development organizations, and (C) conferences and trade fairs to locate small, HUBZone small, small disadvantaged, and women-owned small business sources.

(v) Records of internal guidance and encouragement provided to buyers through (A) workshops, seminars, training, etc., and (B) monitoring performance to evaluate compliance with the program's requirements.

(vi) On a contract-by-contract basis, records to support award data submitted by the offeror to the Government, including the name, address, and business size of each subcontractor. Contractors having commercial plans need not comply with this requirement.

(e) In order to effectively implement this plan to the extent consistent with efficient contract performance, the Contractor shall perform the following functions:

(1) Assist small business, HUBZone small business, small disadvantaged and women-owned small business concerns by arranging solicitations, time for the preparation of bids, quantities, specifications, and delivery schedules so as to facilitate the participation by such concerns. Where the Contractor's lists of potential small, HUBZone small business, small disadvantaged and women-owned small business subcontractors are excessively long, reasonable efforts shall be made to give all such small business concerns an opportunity to compete over a period of time.

(2) Provide adequate and timely consideration of the potentialities of small, HUBZone small business, small disadvantaged and women-owned small business concerns in all "make-or-buy" decisions.

(3) Counsel and discuss subcontracting opportunities with representatives of small, HUBZone small business, small disadvantaged and women-owned small business firms.

(4) Provide notice to subcontractors concerning penalties and remedies for misrepresentations of business status as small, HUBZone small business, small disadvantaged or women-owned small business for the purpose of obtaining a subcontract that is to be included as part or all of a goal contained in the Contractor's subcontracting plan.

(f) A master plan on a plant or division-wide basis that contains all the elements required by paragraph (d) of this clause, except goals, may be incorporated by reference as a part of the subcontracting plan required of the offeror by this clause; provided, (1) the master plan has been approved, (2) the offeror ensures that the master plan is updated as necessary and provides copies of the approved master plan, including evidence of its approval, to the Contracting Officer, and (3) goals and any deviations from the master plan deemed necessary by the Contracting Officer to satisfy the requirements of this contract are set forth in the individual subcontracting plan.

(g) A commercial plan is the preferred type of subcontracting plan for contractors furnishing commercial items. The commercial plan shall relate to the offeror's planned subcontracting generally, for both commercial and Government business, rather than solely to the Government contract. Commercial plans are also preferred for subcontractors that provide commercial items under a prime contract, whether or not the prime contractor is supplying a commercial item.

(h) Prior compliance of the offeror with other such subcontracting plans under previous contracts will be considered by the Contracting Officer in determining the responsibility of the offeror for award of the contract.

(i) The failure of the Contractor or subcontractor to comply in good faith with (1) the clause of this contract entitled "Utilization of Small Business Concerns," or (2) an approved plan required by this clause, shall be a material breach of the contract.

(j) The Contractor shall submit the following reports:

(1) Standard Form 294, Subcontracting Report for Individual Contracts. This report shall be submitted to the Contracting Officer semiannually and at contract completion. The report covers subcontract award data related to this contract. This report is not required for commercial plans.

(2) Standard Form 295, Summary Subcontract Report. This report encompasses all the contracts with the awarding agency. It must be submitted semi-annually for contracts with the Department of Defense and annually for contracts with civilian agencies. If the reporting activity is covered by a commercial plan, the reporting activity must report annually all subcontract awards under that plan. All reports submitted at the close of each fiscal year (both individual and commercial plans) shall include a breakout, in the Contractor's format, of subcontract awards, in whole dollars, to small disadvantaged business concerns by Standard Industrial Classification (SIC) Major Group. For a commercial plan, the Contractor may obtain from each of its subcontractors a predominant SIC Major Group and report all awards to that subcontractor under its predominant SIC Major Group.

46 52.219-16 LIQUIDATED DAMAGES--SUBCONTRACTING PLAN (JAN 1999)

(a) *Failure to make a good faith effort to comply with the subcontracting plan*, as used in this clause, means a willful or intentional failure to perform in accordance with the requirements of the subcontracting plan approved under the clause in this contract entitled "Small, Small Disadvantaged and Women-Owned Small Business Subcontracting Plan," or willful or intentional action to frustrate the plan.

(b) Performance shall be measured by applying the percentage goals to the total actual subcontracting dollars or, if a commercial plan is involved, to the pro rata share of actual subcontracting dollars attributable to Government contracts covered by the commercial plan. If, at contract completion or, in the case of a commercial plan, at the close of the fiscal year for which the plan is applicable, the Contractor has failed to meet its subcontracting goals and the Contracting Officer decides in accordance with paragraph (c) of this clause that the Contractor failed to make a good faith effort to comply with its subcontracting plan, established in accordance with the clause in this contract entitled "Small Business Subcontracting Plan," the Contractor shall pay the Government liquidated damages in an amount stated. The amount of probable damages attributable to the Contractor's failure to comply shall be an amount equal to the actual dollar amount by which the Contractor failed to achieve each subcontract goal.

(c) Before the Contracting Officer makes a final decision that the Contractor has failed to make such good faith effort, the Contracting Officer shall give the Contractor written notice specifying the failure and permitting the Contractor to demonstrate what good faith efforts have been made and to discuss the matter. Failure to respond to the notice may be taken as an admission that no valid explanation exists. If, after consideration of all the pertinent data, the Contracting Officer finds that the Contractor failed to make a good faith effort to comply with the subcontracting plan, the Contracting Officer shall issue a final decision to that effect and require that the Contractor pay the Government liquidated damages as provided in paragraph (b) of this clause.

(d) With respect to commercial products plans; i.e., company-wide or division-wide subcontracting plans approved under paragraph (g) of the clause in this contract entitled "Small, Small Disadvantaged and Women-Owned Small Business Subcontracting Plan," the Contracting Officer of the agency that originally approved the plan will exercise the functions of the Contracting Officer under this clause on behalf of all agencies that awarded contracts covered by that commercial products plan.

(e) The Contractor shall have the right of appeal, under the clause in this contract entitled Disputes, from any final decision of the Contracting Officer.

(f) Liquidated damages shall be in addition to any other remedies that the Government may have.

47. 552.203-71 - RESTRICTION ON ADVERTISING (VARIATION) (SEP 1999)

The Contractor shall not refer to this contract in commercial advertising or similar promotions in such a manner as to state or imply that the product or service provided is endorsed or preferred by the White House, the Executive Office of the President, or any other element of the Federal Government, or is considered by these entities to be superior to other products or services.

REPRESENTATIONS AND CERTIFICATIONS (Acquisition of Leasehold Interests in Real Property)	Solicitation Number GS-05B-16837	Dated 3/7/01

Complete appropriate boxes, sign the form, and attach to offer.

The Offeror makes the following Representations and Certifications. NOTE: The "Offeror," as used on this form, is the owner of the property offered, not an individual or agent representing the owner.

1. 52.219-1 - SMALL BUSINESS PROGRAM REPRESENTATIONS (NOV 1999)

(a) (1) The standard industrial classification (SIC) code for this acquisition is 6515.
(2) The small business size standard applicable to this acquisition is average annual gross revenues of $15 million or less for the preceding three fiscal years.
(3) The small business size standard for a concern which submits an offer in its own name, other than on a construction or service contract, but which proposes to furnish a product which it did not itself manufacture, is 500 employees.

(b) *Representations.*

(1) The Offeror represents as part of its offer that it [X] is, [ ] is not a small business concern.
(2) (Complete only if offeror represented itself as a small business concern in paragraph (b)(1) of this provision.) The Offeror represents, for general statistical purposes, that it[ ] is, [X] is not a small disadvantaged business concern as defined in 13 CFR 124.1002.
(3) (Complete only if offeror represented itself as a small business concern in paragraph (b)(1) of this section.) The Offeror represents as part of its offer that it [ ] is, [X] is not a women-owned small business concern.
(4) [Complete only if offeror represented itself as a small business concern in paragraph (b)(1) of this provision.] The offeror represents, as part of its offer, that it—

(i) [ ] is, [X] is not a HUBZone small business concern listed, on the date of this representation, on the List of Qualified HUBZone Small Business Concerns maintained by the Small Business Administration, and no material change in ownership and control, principal office of ownership, or HUBZone employee percentage has occurred since it was certified by the Small Business Administration in accordance with 13 CFR Part 126; and

(ii) It [ ] is, [X] is not a joint venture that complies with the requirements of 13 CFR Part 126, and the representation in paragraph (b)(4)(i) of this provision is accurate for the HUBZone small business concern or concerns that are participating in the joint venture. [The offeror shall enter the name or names of the HUBZone small business concern or concerns that are participating in the joint venture: _____.] Each HUBZone small business concern participating in the joint venture shall submit a separate signed copy of the HUBZone representation.

(5) [Complete if offeror represented itself as disadvantaged in paragraph (b)(2) of this provision]. The offeror shall check the category in which its ownership falls:

____ Black American.
____ Hispanic American.
____ Native American (American Indians, Eskimos, Aleuts, or Native Hawaiians).
____ Asian-Pacific American (persons with origins from Burma, Thailand, Malaysia, Indonesia, Singapore, Brunei, Japan, China, Taiwan, Laos, Cambodia (Kampuchea), Vietnam, Korea, The Philippines, U.S. Trust Territory of the Pacific Islands (Republic of Palau), Republic of the Marshall Islands, Federated States of Micronesia, the Commonwealth of the Northern Mariana Islands, Guam, Samoa, Macao, Hong Kong, Fiji, Tonga, Kiribati, Tuvalu, or Nauru).
____ Subcontinent Asian (Asian-Indian) American (persons with origins from India, Pakistan, Bangladesh, Sri Lanka, Bhutan, the Maldives Islands, or Nepal).
____ Individual/concern, other than one of the preceding.

(c) *Definitions. Small business concern,* as use in this provision, means a concern, including its affiliates, that is independently owned and operated, not dominant in the field of operation in which it is bidding on Government contracts, and qualified as a small business under the criteria in 13 CFR Part 121 and the size standard in paragraph (a) of this provision.

Women-owned small business concern, as use in this provision, means a small business concern--

(1) Which is at least 51 percent owned by one or more women or, in the case of any publicly owned business, at least 51 percent of the stock of which is owned by one ore more women; and
(2) Whose management and daily business operations are controlled by one or more women.

(d) *Notice.*

(1) If this solicitation is for supplies and has been set aside, in whole or in part, for small business concerns, then the clause in this solicitation providing notice of the set-aside contains restrictions on the source of the end items to be furnished.
(2) Under 15 U.S.C. 645(d), any person who misrepresents a firm's status as a small, small disadvantaged, or women-owned small business concern in order to obtain a contract to be awarded under the preference programs

INITIALS: _____ & _____
LESSOR GOVERNMENT

established pursuant to sections 8(a), 8(d), 9, or 15 of the Small Business Act or any other provision of Federal law that specifically references section 8(d) for a definition of program eligibility, shall--

(i) Be punished by imposition of fine, imprisonment, or both;
(ii) Be subject to administrative remedies, including suspension and debarment; and
(iii) Be ineligible for participation in programs conducted under the authority of the Act.

2. 52.204-5 - WOMEN-OWNED BUSINESS (OTHER THAN SMALL BUSINESS) (MAY 1999)

(a) *Definition.* "Women-owned business concern," as used in this provision, means a concern which is at least 51 percent owned by one or more women; or in the case of any publicly owned business, at least 51 percent of its stock is owned by one or more women; and whose management and daily business operations are controlled by one or more women.

(b) *Representation.* [Complete only if the offeror is a women-owned business concern and has not represented itself as a small business concern in paragraph (b)(1) of FAR 52.219-1, Small Business Program Representations, of this solicitation.] The offeror represents that it [ ] is a women-owned business concern..

3. 52.222-22 - PREVIOUS CONTRACTS AND COMPLIANCE REPORTS (FEB 1999)

The Offeror represents that --

(a) It [X] has, [ ] has not participated in a previous contract or subcontract subject to the Equal Opportunity clause of this solicitation;

(b) It [ ] has, [X] has not filed all required compliance reports; and

(c) Representations indicating submission of required compliance reports, signed by proposed subcontractors, will be obtained before subcontract awards. (Approved by OMB under Control Number 1215-0072.)

4. 52.222-25 - AFFIRMATIVE ACTION COMPLIANCE (APR 1984)

The Offeror represents that --

(a) It [ ] has developed and has on file, [X] has not developed and does not have on file, at each establishment affirmative action programs required by the rules and regulations of the Secretary of Labor (41 CFR 60-1 and 60-2), or

(b) It [ ] has not previously had contracts subject to the written affirmative action programs requirement of the rules and regulations of the Secretary of Labor. (Approved by OMB under Control Number 1215-0072.)

5. 52.203-02 - CERTIFICATE OF INDEPENDENT PRICE DETERMINATION (APR 1985)

(Applies to leases which exceed $100,000 average net annual rental, including option periods.)

(a) The Offeror certifies that--

(1) The prices in this offer have been arrived at independently, without, for the purpose of restricting competition, any consultation, communication, or agreement with any otherOfferor or competitor relating to (i) those prices, (ii) the intention to submit an offer, or (iii) the methods or factors used to calculate the prices offered;
(2) The prices in this offer have not been and will not be knowingly disclosed by theOfferor, directly or indirectly, to any other Offeror or competitor before bid opening (in the case of a sealed bid solicitation) or contract award (in the case of a negotiated solicitation) unless otherwise required by law; and
(3) No attempt has been made or will be made by theOfferor to induce any other concern to submit or not to submit an offer for the purpose of restricting competition.

(b) Each signature on the offer is considered to be a certification by the signatory that the signatory--

(1) Is the person in the Offeror's organization responsible for determining the prices being offered in this bid or proposal, and that the signatory has not participated and will not participate in any action contrary to subparagraphs (a)(1) through (a)(3) above; or
(2) (i) Has been authorized, in writing, to act as agent for the following principals in certifying that those principals have not participated, and will not participate in any action contrary to subparagraphs (a)(1) through (a)(3) above Tom Bowen [insert full name of person(s) in the Offeror's organization responsible for determining the prices offered in this bid or proposal, and the title of his or her position in the Offeror's organization];
(ii) As an authorized agent, does certify that the principals named in subdivision (b)(2)(i) above have not participated, and will not participate, in any action contrary to subparagraphs (a)(1) through (a)(3) above; and
(iii) As an agent, has not personally participated, and will not participate, in action contrary to subparagraphs (a)(1) through (a)(3) above.

(c) If the Offeror deletes or modifies subparagraph (a)(2) above, theOfferor must furnish with its offer a signed statement setting forth in detail the circumstances of the disclosure.

6. 52.203-11 - CERTIFICATION AND DISCLOSURE REGARDING PAYMENTS TO INFLUENCE CERTAIN FEDERAL TRANSACTIONS (APR 1991) (DEVIATION)

INITIALS: _____ & _____
LESSOR GOVERNMENT

(Applies to leases which exceed $100,000.)

(a) The definitions and prohibitions contained in the clause, at FAR 52.203-12, Limitation on Payments to Influence Certain Federal Transactions, are hereby incorporated by reference in paragraph (b) of this certification.

(b) The offeror, by signing its offer, hereby certifies to the best of his or her knowledge and belief that on or after December 23, 1989,--

(1) No Federal appropriated funds have been paid or will be paid to any person for influencing or attempting to influence an officer or employee of any agency, a Member of Congress, an officer or employee of Congress, or an employee of a Member of Congress on his or her behalf in connection with the awarding of a contract resulting from this solicitation.

(2) If any funds other than Federal appropriated funds (including profit or fee received under a covered Federal transaction) have been paid, or will be paid, to any person for influencing or attempting to influence an officer or employee of any agency, a Member of Congress, an officer or employee of Congress, or an employee of a Member of Congress on his or her behalf in connection with this solicitation, theofferor shall complete and submit, with its offer, OMB standard form LLL, Disclosure of Lobbying Activities, to the Contracting Officer; and

(3) He or she will include the language of this certification in all subcontract awards at any tier and require that all recipients of subcontract awards in excess of $100,000 shall certify and disclose accordingly.

(c) Submission of this certification and disclosure is a prerequisite for making or entering into this contract imposed by section 1352, title 31, United States Code. Any person who makes an expenditure prohibited under this provision or who fails to file or amend the disclosure form to be filed or amended by this provision, shall be subject to a civil penalty of not less than $10,000, and not more than $100,000, for each such failure.

7. 52.209-5 - CERTIFICATION REGARDING DEBARMENT, SUSPENSION, PROPOSED DEBARMENT, AND OTHER RESPONSIBILITY MATTERS (MAR 1996)

(Applies to leases which exceed $100,000 average net annual rental, including option periods.)

(a) (1) The Offeror certifies, to the best of its knowledge and belief, that--

(i)The Offeror and/or any of its Principals--

(A) Are [ ] are not [X] presently debarred, suspended, proposed for debarment, or declared ineligible for the award of contracts by any Federal agency;

(B) Have [ ] have not [X], within a three-year period preceding this offer, been convicted of ohad a civil judgment rendered against them for: commission of fraud or a criminal offense in connection with obtaining, attempting to obtain, or performing a public (Federal, State, or local) contract or subcontract; violation of Federal or State antitrust statutes relating to the submission of offers; or commission of embezzlement, theft, forgery, bribery, falsification or destruction of records, making false statements, tax evasion, or receiving stolen property; and

(C) Are [ ] are not [X] presently indicted for, or otherwise criminally or civilly charged by a governmental entity with, commission of any of the offenses enumerated in subdivision (a)(1)(i)(B) of this provision.

(ii) The Offeror has [ ] has not [X], within a three-year period preceding this offer, had one or more contracts terminated for default by any Federal agency.

(2) "Principals," for the purposes of this certification, means officers; directors; owners; partners; and, persons having primary management or supervisory responsibilities within a business entity (e.g., general manager; plant manager; head of a subsidiary, division, or business segment, and similar positions).

THIS CERTIFICATION CONCERNS A MATTER WITHIN THE JURISDICTION OF AN AGENCY OF THE UNITED STATES AND THE MAKING OF A FALSE, FICTITIOUS, OR FRAUDULENT CERTIFICATION MAY RENDER THE MAKER SUBJECT TO PROSECUTION UNDER SECTION 1001, TITLE 18, UNITED STATES CODE.

(b) The Offeror shall provide immediate written notice to the Contracting Officer if, at any time prior to contract award, the Offeror learns that its certification was erroneous when submitted or has become erroneous by reason of changed circumstances.

(c) A certification that any of the items in paragraph (a) of this provision exists will not necessarily result in withholding of an award under this solicitation. However, the certification will be considered in connection with a determination of the Offeror's responsibility. Failure of theOfferor to furnish a certification or provide such additional information as requested by the Contracting Officer may render the Offeror nonresponsible.

(d) Nothing contained in the foregoing shall be construed to require establishment of a system of records in order to render, in good faith, the certification required by paragraph (a) of this provision. The knowledge and information of anOfferor is not required to exceed that which is normally possessed by a prudent person in the ordinary course of business dealings.

(e) The certification in paragraph (a) of this provision is a material representation of fact upon which reliance was placed when making award. If it is later determined that theOfferor knowingly rendered an erroneous certification, in addition to other remedies available to the Government, the Contracting Officer may terminate the contract resulting from this solicitation for default.

8. 52.204-3 - TAXPAYER IDENTIFICATION (JUN 1997)

(a) *Definitions.*

"*Common parent*," as used in this solicitation provision, means that corporate entity that owns or controls an affiliated group of corporations that files its Federal income tax returns on a consolidated basis, and of which theofferor is a member.

"*Taxpayer Identification Number* (TIN)," as used in this solicitation provision, means the number required by the IRS to be used by the offeror in reporting income tax and other returns. The TIN may be either a Social Security Number or an Employer Identification Number.

(b) All offerors must submit the information required in paragraphs (d) through (f) of this provision to comply with debt collection requirements of 31 U.S.C. 7701(c) and 3325(d), reporting requirements of 26 U.S.C. 6041, 6041A, and 6050M, and implementing regulations issued by the IRS. If the resulting contract is subject to the payment reporting requirements described in Federal Acquisition Regulation (FAR) 4.904, the failure or refusal by the offeror to furnish the information may result in a 31 percent reduction of payments otherwise due under the contract.

(c) The TIN may be used by the Government to collect and report on any delinquent amounts arising out of theofferor's relationship with the Government (31 U.S.C. 7701(c)(3)). If the resulting contract is subject to the payment reporting requirements described in FAR 4.904, the TIN provided hereunder may be matched with IRS records to verify the accuracy of the offeror's TIN.

(d) *Taxpayer Identification Number (TIN).*

* TIN: TO BE APPLIED FOR
* TIN has been applied for.
* TIN is not required because:
* Offeror is a nonresident alien, foreign corporation, or foreign partnership that does not have income effectively connected with the conduct of a trade or business in the United States and does not have an office or place of business or a fiscal paying agent in the United States;
* Offeror is an agency or instrumentality of a foreign government;
* Offeror is an agency or instrumentality of the Federal government;

(e) *Type of organization.*

* Sole proprietorship;
* Partnership; Not a corporate entity;
* Corporate entity (not tax-exempt);
* Corporate entity (tax-exempt);
* Government entity (Federal, State, or local);
* Foreign government;
* International organization per 26 CFR 1.6049-4;
* Other _____.

(f) *Common Parent.*

* Offeror is not owned or controlled by a common parent as defined in paragraph (a) of this provision.
* Name and TIN of common parent:

Name _____
TIN _____

9. OFFEROR'S DUNS NUMBER (APR 1996)

Enter number, if known: _____

OFFEROR OR AUTHORIZED REPRESENTATIVE	Name and Address (Including ZIP Code) North Bogey Properties, LLC 456 E. 16th Street Holland, MI 49423 (b) (6) [redacted] Signature Tom Bowen, Member	Telephone Number (616) 355-6349 March 7, 2001 Date

INITIALS: _____ & _____
LESSOR GOVERNMENT

GENERAL DECISION MI010063 04/20/01 MI63
General Decision Number MI010063

Superseded General Decision No. MI000063

State: Michigan

Construction Type:
HEAVY

County(ies):

ALCONA	GRAND TRAVERSE	MONTCALM
ANTRIM	KALKASKA	NEWAYGO
BENZIE	LAKE	OCEANA
CHARLEVOIX	LEELANAU	OSCEOLA
CHEBOYGAN	MANISTEE	OSCODA
CLARE	MASON	OTSEGO
CRAWFORD	MECOSTA	ROSCOMMON
EMMET	MISSAUKEE	**WEXFORD**

HEAVY CONSTRUCTION PROJECTS (does not include airport or bridge construction projects, or sewer or water line work if it is incidental to a highway construction project)

Modification Number	Publication Date
0	03/02/2001
1	03/23/2001
2	04/20/2001

COUNTY(ies):

ALCONA	GRAND TRAVERSE	MONTCALM
ANTRIM	KALKASKA	NEWAYGO
BENZIE	LAKE	OCEANA
CHARLEVOIX	LEELANAU	OSCEOLA
CHEBOYGAN	MANISTEE	OSCODA
CLARE	MASON	OTSEGO
CRAWFORD	MECOSTA	ROSCOMMON
EMMET	MISSAUKEE	**WEXFORD**

ASBE0047H 07/01/2000

	Rates	Fringes
ASBESTOS WORKER/INSULATOR Includes the application of all insulating materials, protective coverings, coatings and finishings to all types of mechanical systems	23.54	8.82

BOIL0169C 07/01/2000

	Rates	Fringes
BOILERMAKER	25.02	8% + 11.392

BRMI0001B 06/01/2000

	Rates	Fringes
MECOSTA AND MONTCALM COUNTIES; OSCEOLA COUNTY (Townships of Evart, Hersey, Orient and Richmond):		
MARBLE, TERRAZZO AND TILE SETTER	15.36	3.35

BRMI0005C 10/01/1993

	Rates	Fringes
LAKE, MASON, NEWAYGO AND OCEANA COUNTIES:		
MARBLE, TERRAZZO AND TILE SETTER	15.61	3.00

BRMI0010K 06/01/2000

	Rates	Fringes
ALCONA, ANTRIM, BENZIE, CHARLEVOIX, CHEBOYGAN, CLARE, CRAWFORD, EMMET, GRAND TRAVERSE, KALKASKA, LEELANAU, MANISTEE, MISSAUKEE, OSCODA, OTSEGO, ROSCOMMON AND **WEXFORD** COUNTIES:		
BRICKLAYER AND PLASTERER	21.13	6.90
CEMENT MASON	19.03	6.70

FOOTNOTE:
Work done from swinging and overhanging scaffolds: $0.50 per hour additional.

BRMI0010N 10/01/2000

	Rates	Fringes
LAKE, MASON, MECOSTA AND OSCEOLA COUNTIES:		
CEMENT MASON	19.27	4.90

FOOTNOTE:
Paid Holiday:
Fourth of July, if the worker has been employed by the contractor in any period of seven working days before said holiday within the current calendar year.

BRMI0010O 10/01/2000

	Rates	Fringes
LAKE, MASON, MECOSTA, MONTCALM, NEWAYGO, OCEANA AND OSCEOLA COUNTIES:		
BRICKLAYER	20.78	5.78

FOOTNOTE:
Paid Holiday:
Fourth of July, if the worker has been employed by the contractor in any period of seven working days before said holiday within the current calendar year.

CARP0100B 06/01/2000

	Rates	Fringes
LAKE, MASON, MECOSTA, MONTCALM, NEWAYGO, OCEANA AND OSCEOLA COUNTIES:		
CARPENTER; PILEDRIVER; SOFT FLOOR LAYER	19.48	5.80

FOOTNOTES:
Work on materials treated with creosote, or those which are wet with "Wood Life" material (fresh cuts of lumber which have been treated with "Wood Life" are not to be considered as wet materials): $0.25 per hour additional.
Work on any swing scaffold: $0.15 per hour additional.
Work on chimneys or towers over thirty (30) feet in height:

$0.50 per hour additional.

CARP0202C 05/01/2000

	Rates	Fringes
ALCONA, ANTRIM, BENZIE, CHARLEVOIX, CHEBOYGAN, CRAWFORD, EMMET, GRAND TRAVERSE, KALKASKA, LEELANAU, MANISTEE, MISSAUKEE, OSCODA, OTSEGO, ROSCOMMON AND **WEXFORD** COUNTIES:		
CARPENTER	18.83	5.77
PILEDRIVER	19.46	5.79

FOOTNOTE:
Welding: $.25 per hour additional.

CARP0706G 08/01/2000

	Rates	Fringes
CLARE COUNTY:		
CARPENTER	22.41	6.62

CARP1102F 06/01/2000

	Rates	Fringes
ALCONA, ANTRIM, BENZIE, CHARLEVOIX, CHEBOYGAN, CRAWFORD, EMMET, GRAND TRAVERSE, KALKASKA, LAKE, LEELANAU, MANISTEE, MASON, MECOSTA, MISSAUKEE, MONTCALM, NEWAYGO, OCEANA, OSCEOLA, OSCODA, OTSEGO, ROSCOMMON AND **WEXFORD** COUNTIES:		
MILLWRIGHT	22.36	9.00

FOOTNOTES:
Work on heights over open areas and over fifty (50) ft. high: $.50 per hour additional.
Welding: $.50 per hour additional.

CARP1102J 06/01/2000

	Rates	Fringes
CLARE COUNTY:		
MILLWRIGHT	29.42	11.25

ELEC0107D 06/01/1996

	Rates	Fringes
MECOSTA AND MONTCALM COUNTIES; AND OSCEOLA COUNTY (Townships of Evart, Hersey, Orient and Richmond):		
ELECTRICIANS:		
Electrician	19.22	3% + 4.28
Cable splicer	21.62	3% + 4.28

ELEC0275A 06/01/1999

	Rates	Fringes
LAKE, MASON, MECOSTA, MONTCALM, NEWAYGO AND OCEANA COUNTIES; OSCEOLA COUNTY (Townships of Evart, Hersey, Orient and Richmond):		
ELECTRICIAN	21.49	3% + 5.63

FOOTNOTE:
Work 40' or more above ground, floor or flat roofs, except work on mechanical/hydraulic work platforms which are MIOSHA approved: 10% additional.

ELEC0498A 06/01/1997

	Rates	Fringes

ANTRIM, BENZIE AND CHARLEVOIX COUNTIES; CHEBOYGAN COUNTY (Township of Mentor); CLARE COUNTY (Townships of Freeman, Garfield, Greenwood, Lincoln, Redding, Summerfield, Surrey and Winterfield); CRAWFORD COUNTY (does not include the township of Lovetts); EMMET COUNTY (does not include the township of Wawatan); GRAND TRAVERSE AND KALKASKA COUNTIES; LAKE COUNTY (Townships of Dover, Eden, Elk, Ellsworth, Newkirk, Peacock and Sauble); LEELANAU AND MANISTEE COUNTIES; MASON COUNTY (Townships of Freesoil, Grant and Meade); MISSAUKEE COUNTY; OSCEOLA COUNTY (does not include the townships of Evart, Hersey, Orient and Richmond); OTSEGO COUNTY (does not include the townships of Charlton, Chester and Dover); ROSCOMMON COUNTY (does not include the townships of Backus, Nestor and Roscommon); **WEXFORD** COUNTY:

ELECTRICIAN	20.77	15% + 2.55

FOOTNOTES:
Work at heights of from thirty-five (35) to sixty (60) feet shall be paid ten percent (10%) of the straight time rate of pay over and above the applicable rate.
Work over sixty (60) feet shall be paid twenty percent (20%) over and above the applicable rate.
Above provisions to be interpreted as follows:
All work to be done while on a bosuns chair or swinging scaffold; while on ladders, towers, scaffolds, unguarded stairs, structural members of temporary structures (such as decks or forms near unguarded areas). Ropes shall not be considered guardrails. High time does not apply to work performed when in an aerial bucket or on the platform of a scissor lift.
The height shall be calculated from floor or ground to the level of the work being done.

ELEC0692E 06/01/1997

	Rates	Fringes

CLARE COUNTY (Townships of Arthur, Franklin, Frost, Grand, Hamilton, Hatton, Hayes and Sheridan); AND ROSCOMMON COUNTY (Townships of Backus, Nestor and Roscommon):

ELECTRICIAN	22.26	18.52%+2.35

ELEC0692I 06/01/1997

	Rates	Fringes

ALCONA COUNTY; CHEBOYGAN COUNTY (does not include the township of Mentor); CRAWFORD COUNTY (Township of Lovetts); EMMET COUNTY (Township of Wawatan); OSCODA COUNTY; OTSEGO COUNTY (Townships of Charlton, Chester and Dover):

ELECTRICIAN	20.82	18.52%+2.35

---

* ELEC0876G 06/01/2000

	Rates	Fringes
LINE CONSTRUCTION:		

Line technician	25.62	19.5% + 2.10
Cable splicer	26.68	19.5% + 2.10
Operator/ground person (digger, tractor and setting rig with tracks or rough terrain vehicle, large bombardier, backhoe over 85 hp, hydraulic crane 10 ton or over)	19.76	19.5% + 2.10
Light equipment operator/ground person/truck driver/ground person (winch, A-frame, diggers when used for distribution line truck and used for distribution work. Distribution truck driver, 5th wheel type trucks, bucket trucks, ladder trucks and all live boom trucks, all equipment 85 hp or under)	17.36	19.5% + 2.10
Truck driver/ground person (trucks with winch or boom or dump, other than distribution work)	16.54	19.5% + 2.10
Ground person	13.86	19.5% + 2.10

FOOTNOTE:
Operators of 5/8 yd. rated capacity backhoe or over, and operator of 25 ton, rated capacity, crane or over, and operators of heavy duty tension or pulling machinery on 345 KV and above, shall receive the line technician rate of pay.

ENGI0324H 10/01/2000

	Rates	Fringes
SEWER RELINING:		
POWER EQUIPMENT OPERATORS:		
GROUP 1	22.71	7.96
GROUP 2	21.32	7.96

SEWER RELINING CLASSIFICATIONS

GROUP 1: Operation of audio-visual closed circuit TV system, including remote in-ground cutter and other equipment used in connection with the CCTV system

GROUP 2: Operation of hot water heaters and circulation systems, water jetters and vacuum and mechanical debris removal systems

---

ENGI0324S 05/01/2000

	Rates	Fringes
ALCONA, ANTRIM, BENZIE, CHARLEVOIX, CHEBOYGAN, CLARE, CRAWFORD, EMMET, GRAND TRAVERSE, KALKASKA, LEELANAU, MISSAUKEE, OSCODA, OTSEGO, ROSCOMMON AND **WEXFORD** COUNTIES:		
POWER EQUIPMENT OPERATORS:		
GROUP 1	24.81	9.80
GROUP 2	24.56	9.80
GROUP 3	23.46	9.80
GROUP 4	19.96	9.80
GROUP 5	19.36	9.80
GROUP 6	17.21	9.80

GROUP 7	15.51	9.80

LAKE, MANISTEE, MASON, MECOSTA, MONTCALM, NEWAYGO, OCEANA AND OSCEOLA COUNTIES:

POWER EQUIPMENT OPERATORS:

GROUP 1	24.81	9.80
GROUP 2	24.56	9.80
GROUP 3	24.06	9.80
GROUP 4	20.26	9.80
GROUP 5	19.66	9.80
GROUP 6	17.51	9.80
GROUP 7	15.86	9.80

FOOTNOTES:
Crane operator with main boom and jib 300' or longer: $1.50 per hour above the group 1 rate.
Crane operator with main boom and jib 400' or longer: $3.00 per hour above the group 1 rate.

PAID HOLIDAYS:
New Year's Day, Decoration Day, Fourth of July, Labor Day, Thanksgiving Day and Christmas Day.

POWER EQUIPMENT OPERATOR CLASSIFICATIONS

GROUP 1: Crane with main boom and jib 220' or longer

GROUP 2: Crane with main boom and jib 140' or longer, tower crane, gantry crane, whirley derrick

GROUP 3: Regular equipment operator, crane, stiff leg derrick, scraper, dozer, grader, front end loader, hoist, job mechanic

GROUP 4: Air tugger (single drum), material hoist, boiler operator, sweeping machine, winch truck, Bobcat and similar equipment, fork truck (over 20' lift)

GROUP 5: Pump 6" or over, well points, freeze systems, boom truck (non-swinging); end dumps and laser/power screed; concrete wire saw (20 h.p. and over)
GROUP 6: Air compressor, welder, generator, conveyor, pump under 6", grease person and fork truck (20' lifting capacity or less when working on masonry work)

GROUP 7: Oiler, fire tender and heater operator

ENGI0325M 05/01/2000

	Rates	Fringes
POWER EQUIPMENT OPERATORS:		
STEEL ERECTION:		

LAKE, MANISTEE, MASON, MECOSTA, MONTCALM, NEWAYGO, OCEANA AND OSCEOLA COUNTIES:

GROUP 1	25.16	9.80
GROUP 2	24.91	9.80
GROUP 3	24.41	9.80
GROUP 4	20.61	9.80
GROUP 5	18.96	9.80
GROUP 6	16.66	9.80

ANTRIM, BENZIE, CHARLEVOIX, EMMET, GRAND TRAVERSE, KALKASKA, LEELANAU, MISSAUKEE AND **WEXFORD** COUNTIES:

GROUP 1	25.16	9.80
GROUP 2	24.91	9.80
GROUP 3	23.91	9.80
GROUP 4	20.31	9.80
GROUP 5	18.66	9.80
GROUP 6	16.16	9.80

FOOTNOTES:
Crane operator with main boom and jib 300' or longer: $1.50 additional to the group 1 rate.
Crane operator with main boom and jib 400' or longer: $3.00 additional to the group 1 rate.

PAID HOLIDAYS:
New Year's Day, Decoration Day, Fourth of July, Labor Day, Thanksgiving Day and Christmas Day.

POWER EQUIPMENT OPERATOR CLASSIFICATIONS

GROUP 1: Crane operator, with main boom & jib 220' or longer

GROUP 2: Crane operator, with main boom & jib 140' or longer; Tower crane; Gantry crane; Whirley derrick

GROUP 3: Regular equipment operator, crane, dozer, loader, hoist, straddle wagon, mechanic

GROUP 4: Air tugger (single drum), material hoist, pump 6" or over

GROUP 5: Air compressor, welder, generators, conveyors

GROUP 6: Oiler and fire tender

ENGI0325U 06/01/2000

ALCONA, CHEBOYGAN, CLARE, CRAWFORD, OSCODA, OTSEGO AND ROSCOMMON COUNTIES:

	Rates	Fringes
POWER EQUIPMENT OPERATORS:		
STEEL ERECTION:		
GROUP 1	34.87	9.82
GROUP 2	35.87	9.82
GROUP 3	33.37	9.82
GROUP 4	34.37	9.82
GROUP 5	31.87	9.82
GROUP 6	32.87	9.82
GROUP 7	31.60	9.82
GROUP 8	32.60	9.82
GROUP 9	31.15	9.82
GROUP 10	32.15	9.82
GROUP 11	30.42	9.82
GROUP 12	31.42	9.82
GROUP 13	30.06	9.82
GROUP 14	31.06	9.82
GROUP 15	29.42	9.82
GROUP 16	22.61	9.82
GROUP 17	21.20	9.82

FOOTNOTE:
PAID HOLIDAYS: New Year's Day, Memorial Day, Fourth of July, Labor Day, Thanksgiving Day and Christmas Day.

POWER EQUIPMENT OPERATOR CLASSIFICATIONS

GROUP 1: Engineer when operating combination of boom and jib 400' or longer

GROUP 2: Engineer when operating combination of boom and jib 400' or longer on a crane that requires an oiler

GROUP 3: Engineer when operating combination of boom and jib 300' or longer

GROUP 4: Engineer when operating combination of boom and jib 300' or longer on a crane that requires an oiler

GROUP 5: Engineer when operating combination of boom and jib 220' or longer

GROUP 6: Engineer when operating combination of boom and jib 220' or longer on a crane that requires an oiler

GROUP 7: Engineer when operating combination of boom and jib 140' or longer

GROUP 8: Engineer when operating combination of boom and jib 140' or longer on a crane that requires an oiler

GROUP 9: Tower crane and derrick operator (where operator's work station is 50 ft. or more above first sub-level)
GROUP 10: Tower crane and derrick operator (where operator's work station is 50 ft. or more above first sub-level) on a crane that requires an oiler

GROUP 11: Engineer when operating combination of boom and jib 120' or longer

GROUP 12: Engineer when operating combination of boom and jib 120' or longer on a crane that requires an oiler

GROUP 13: Crane operator and job mechanic

GROUP 14: Crane operator on a crane that requires an oiler

GROUP 15: Hoisting operator

GROUP 16: Compressor or welder operator

GROUP 17: Oiler

ENGI0325W 09/01/2000

	Rates	Fringes
POWER EQUIPMENT OPERATORS:		
UNDERGROUND WORK:		
GROUP 1	23.85	9.82
GROUP 2	20.36	9.82
GROUP 3	19.86	9.82
GROUP 4	19.58	9.82

POWER EQUIPMENT OPERATOR CLASSIFICATIONS

GROUP 1: Backfiller tamper; Backhoe; Batch plant operator (concrete); Clamshell; Concrete paver (2 drums or larger); Conveyor loader (Euclid type); Crane (crawler, truck type or pile driving); Dozer; Dragline; Elevating grader; Endloader; Gradall (and similar type machine); Grader; Mechanic; Power shovel; Roller (asphalt); Scraper (self-propelled or tractor drawn); Side boom tractor (type D-4 or equivalent and larger); Slip form paver; Slope paver; Trencher (over 8 ft. digging capacity); Well drilling rig

GROUP 2: Boom truck (power swing type boom); Crusher; Hoist; Pump (1 or more - 6-in. discharge or larger - gas or diesel-powered or powered by generator of 300 amperes or more - inclusive of generator); Side boom tractor (smaller than type D-4 or equivalent); Sweeper (Wayne type and similar equipment); Tractor (pneu-tired, other than backhoe or front end loader); Trencher (8-ft. digging capacity and smaller)

GROUP 3: Air compressors (600 cfm or larger); Air compressors (2 or more - less than 600 cfm); Boom truck (non-swinging, non-powered type boom); Concrete breaker (self-propelled or truck mounted - includes compressor); Concrete paver (1 drum - 1/2 yd. or larger); Elevator (other than passenger); Maintenance person; Pump (2 or more - 4-in. up to 6-in. discharge - gas or diesel powered - excluding submersible pumps); Pumpcrete machine (and similar equipment); Wagon drill (multiple); Welding machine or generator (2 or more - 300 amp. or larger - gas or diesel powered)

GROUP 4: Boiler; Concrete saw (40 hp or over); Curing machine (self-propelled); Farm tractor (with attachment); Finishing machine (concrete); Fire person; Hydraulic pipe pushing machine; Mulching equipment; Oiler; Pumps (2 or more up to 4-in. discharge, if used 3 hours or more a day, gas or diesel powered - excluding submersible pumps); Roller (other than asphalt); Stump remover; Trencher (service); Vibrating compaction equipment, self-propelled (6 ft. wide or over); End dump operator

---

* ENGI0325Z 10/01/2000

	Rates	Fringes
POWER EQUIPMENT OPERATORS:		
HAZARDOUS WASTE REMOVAL:		
LEVEL A:		
GROUP 1	26.37	9.80
GROUP 2	22.87	9.80
Engineer when operating crane with boom and jib or leads 220' or longer	29.32	9.80
Engineer when operating crane with boom and jib or leads 140' or longer	29.02	9.80
Regular crane operator, mechanic, dragline operator, boom truck operator and concrete pump with boom operator	27.34	9.80
LEVELS B AND C:		

GROUP 1	25.42	9.80
GROUP 2	21.93	9.80
Engineer when operating crane with boom and jib or leads 220' or longer	28.37	9.80
Engineer when operating crane with boom and jib or leads 140' or longer	28.07	9.80
Regular crane operator, mechanic, dragline operator, boom truck operator and concrete pump with boom operator	26.39	9.80
LEVEL D:		
GROUP 1	24.12	9.80
GROUP 2	20.63	9.80
Engineer when operating crane with boom and jib or leads 220' or longer	27.07	9.80
Engineer when operating crane with boom and jib or leads 140' or longer	26.77	9.80
Regular crane operator, mechanic, dragline operator, boom truck operator and concrete pump with boom operator	25.09	9.80
LEVEL D WHEN CAPPING LANDFILL:		
GROUP 1	23.87	9.80
GROUP 2	20.38	9.80
Engineer when operating crane with boom and jib or leads 220' or longer	26.82	9.80
Engineer when operating crane with boom and jib or leads 140' or longer	26.52	9.80
Regular crane operator, mechanic, dragline operator, boom truck operator and concrete pump with boom operator	24.84	9.80

HAZARDOUS WASTE REMOVAL CLASSIFICATIONS

GROUP 1: Backhoe, batch plant operator, clamshell, concrete breaker when attached to hoe, concrete cleaning decontamination machine operator, concrete pump, concrete paver, crusher, dozer, elevating grader, endloader, farm tractor (90 h.p. and higher), gradall, grader, heavy equipment robotics operator, loader, pug mill, pumpcrete machines, pump trucks, roller, scraper (self-propelled or tractor drawn), side boom tractor, slip form paver, slop paver, trencher, ultra high pressure waterjet cutting tool system operator, vactors, vacuum blasting machine operator, vertical lifting hoist, vibrating compaction equipment (self-propelled), and well drilling rig

GROUP 2: Air compressor, concrete breaker when not attached to hoe, elevator, end dumps, equipment decontamination operator, farm tractor (less than 90 h.p.) forklift, generator, heater, mulcher, pigs (portable reagent storage tanks), power screens, pumps (water), stationary compressed air plant, sweeper, and

welding machine

ENGI0326A 05/01/2000

	Rates	Fringes
POWER EQUIPMENT OPERATORS:		
GAS DISTRIBUTION AND DUCT INSTALLATION WORK:		
GROUP 1	21.59	9.80
GROUP 2-A	21.49	9.80
GROUP 2-B	21.27	9.80
GROUP 3	20.49	9.80
GROUP 4	19.99	9.80

SCOPE OF WORK:
The construction, installation, treating and reconditioning of pipelines transporting gas vapors within cities, towns, subdivisions, suburban areas, or within private property boundaries, up to and including private meter settings of private industrial, governmental or other premises, more commonly referred to as "Distribution Work," starting from the first metering station, connection, similar or related facility, of the main or cross country pipeline and including duct installation.

POWER EQUIPMENT - GAS DISTRIBUTION CLASSIFICATIONS

GROUP 1: Mechanic, crane (over 1/2 yd. capacity), backhoe (over 1/2 yd. capacity), grader (Caterpillar 12 equivalent or larger)

GROUP 2-A: Trencher, backhoe (1/2 yd. capacity or less)

GROUP 2-B: Crane (1/2 yd. capacity or less), compressor (2 or more), dozer (D-4 equivalent or larger), endloader (1 yd. capacity or larger), pump (1 or 2 six-inch or larger), side boom (D-4 equivalent or larger)

GROUP 3: Backfiller, boom truck (powered), concrete saw (20 hp or larger), dozer (less than D-4 equivalent), endloader (under 1 yd. capacity), farm tractor (with attachments), pump (2 - 4 under six-inch capacity), side boom tractor (less than D-4 equivalent), tamper (self-propelled)

GROUP 4: Oiler, grease person

IRON0025W 06/01/2000

	Rates	Fringes
ALCONA, CHEBOYGAN, CLARE, CRAWFORD, OSCODA, OTSEGO AND ROSCOMMON COUNTIES:		
IRONWORKERS:		
Machinery mover, rigger and machinery erector	21.07	14.87

IRON0026C 04/01/2000

	Rates	Fringes
IRONWORKERS - PRE-ENGINEERED METAL **BUILDING** ERECTOR	17.28	11.29

IRON0026E 06/01/2000

	Rates	Fringes
ALCONA, CHEBOYGAN, CLARE, CRAWFORD, OSCODA, OTSEGO AND ROSCOMMON		

COUNTIES:

IRONWORKERS:

Ornamental, structural, precast erector	24.29	16.63
Fence erector	17.57	12.03
Siding & decking	19.76	14.56

IRON0026L 06/01/2000

	Rates	Fringes
ALCONA, CHEBOYGAN, CLARE, CRAWFORD, OSCODA, OTSEGO AND ROSCOMMON COUNTIES:		
IRONWORKERS:		
Reinforcing	22.84	15.07
Wire mesh	19.21	13.80

IRON0340D 06/01/2000

	Rates	Fringes
ANTRIM, BENZIE, CHARLEVOIX, EMMET, GRAND TRAVERSE, KALKASKA, LAKE, LEELANAU, MANISTEE, MASON, MECOSTA, MISSAUKEE, MONTCALM, NEWAYGO, OCEANA, OSCEOLA AND **WEXFORD** COUNTIES:		
IRONWORKERS:		
Reinforcing & structural	20.38	9.56
Rigger; Heavy machinery mover	19.92	8.26

LABO0005E 10/01/2000

	Rates	Fringes
LABORERS:		
HAZARDOUS WASTE ABATEMENT:		
ALCONA, ANTRIM, BENZIE, CHARLEVOIX, CHEBOYGAN, CRAWFORD, EMMET, GRAND TRAVERSE, KALKASKA COUNTIES, LEELANAU, MISSAUKEE, OSCODA, OTSEGO AND **WEXFORD** COUNTIES:		
Work performed in conjunction with site preparation not requiring the use of personal protective equipment; Also, Level D	16.38	4.96
Levels A, B or C	17.38	4.96
CLARE AND ROSCOMMON COUNTIES:		
Work performed in conjunction with site preparation not requiring the use of personal protective equipment; Also, Level D	18.76	4.96
Levels A, B or C	19.76	4.96
LAKE, MANISTEE, MASON, MECOSTA, MONTCALM, NEWAYGO, OCEANA AND OSCEOLA COUNTIES:		
Work performed in conjunction with site preparation not requiring the use of personal protective equipment; Also, Level D	17.26	4.96
Levels A, B or C	18.26	4.96

---

* LABO0259M 09/01/2000

	Rates	Fringes
LABORERS:		
TUNNEL, SHAFT & CAISSON:		

SCOPE OF WORK:
Tunnel, shaft and caisson work of every type and descripton and all operations incidental thereto, including, but not limited to, shafts and tunnels for sewers, water, subways, transportation, diversion, sewerage, caverns, shelters, aquafers, reservoirs, missile silos and steel sheeting for underground construction.

TUNNEL, SHAFT & CAISSON:		
GROUP 1	20.17	5.02
GROUP 2	20.26	5.02
GROUP 3	20.36	5.02
GROUP 4	20.52	5.02
GROUP 5	20.78	5.02
GROUP 6	21.09	5.02
GROUP 7	13.36	5.02

TUNNEL LABORER CLASSIFICATIONS

GROUP 1: Tunnel, shaft and caisson laborer, dump, shanty, hog house tender, testing (on gas)

GROUP 2: Manhole, headwall, catch basin builder, bricklayer tender, mortar, material mixer, fence erector and guard rail builder

GROUP 3: Air tool operator (jackhammer, bush hammer and grinder), first bottom, second bottom, cage tender, car pusher, carrier, concrete, concrete form, concrete repair, cement invert laborer, cement finisher, concrete shoveler, conveyor, floor, gasoline and electric tool operator, gunite, grout operator, welder, heading dinky person, inside lock tender, pea gravel operator, pump, outside lock tender, scaffold, top signal person, switch person, track, tugger, utility person, vibrator, winch operator, pipe jacking, wagon drill and air track operator and concrete saw operator (under 40 h.p.)

GROUP 4: Tunnel, shaft and caisson mucker, bracer, liner plate, long haul dinky driver and well point

GROUP 5: Tunnel, shaft and caisson miner, drill runner, key board operator, power knife operator, reinforced steel or mesh (e.g. wire mesh, steel mats, dowel bars, etc.)

GROUP 6: Dynamite and powder

GROUP 7: Restoration laborer, seeding, sodding, planting, cutting, mulching and top soil grading; and the restoration of property such as replacing mailboxes, wood chips, planter boxes, flagstones, etc.

LABO0260C 08/01/2000

	Rates	Fringes
ASBESTOS LABORERS		
Includes removing and disposing of all insulation materials from		

walls, ceilings, floors, columns, and all other non-mechanical surfaces; and removal of insulating materials from mechanical systems that are to be demolished; loading/unloading of bagged and tagged materials at the disposal site (includes lead paint abatement clean-up)	16.78	5.72

LABO0260H 06/01/2000

LAKE, MANISTEE, MASON, NEWAYGO AND OCEANA COUNTIES:	Rates	Fringes
LABORERS:		
GROUP 1	14.60	5.00
GROUP 2	14.85	5.00
GROUP 3	15.10	5.00

LABORER CLASSIFICATIONS

GROUP 1: General laborer; also, work on pumps, well wheels, air, electric or gasoline tools, motor-driven buggies; laborers working on swing scaffolds; carpenter tender; cement finisher tender

GROUP 2: Jackhammer operator, crocklayer and caisson worker in buildings

GROUP 3: Top person on chimneys or towers over thirty (30') in height, material mixer, operator of portable mixer and plasterer tender

---

LABO0260I 06/01/2000

MECOSTA, MONTCALM AND OSCEOLA COUNTIES:	Rates	Fringes
LABORERS:		
GROUP 1	14.85	5.00
GROUP 2	15.10	5.00
GROUP 3	15.35	5.00

LABORER CLASSIFICATIONS

GROUP 1: General laborer; also, work on pumps, well wheels, air, electric or gasoline tools, motor-driven buggies; laborers working on swing scaffolds; carpenter tender, cement finisher tender

GROUP 2: Jackhammer operator, crocklayer and caisson worker in buildings

GROUP 3: Top person on chimneys or towers over thirty (30') in height, material mixers, operators of portable mixers and plasterer tender

---

LABO0334P 07/01/2000

	Rates	Fringes

LANDSCAPE LABORERS:

GROUP 1	14.50	3.05
GROUP 2	11.03	3.05

LANDSCAPE LABORER CLASSIFICATIONS

GROUP 1: Landscape specialist, including air, gas and diesel equipment operator and lawn sprinkler installer

GROUP 2: Landscape laborer: small power tool operator, material mover and truck driver

---

* LABO0334W 09/01/2000

	Rates	Fringes
LABORERS - OPEN CUT:		
GROUP 1	17.12	5.02
GROUP 2	17.25	5.02
GROUP 3	17.36	5.02
GROUP 4	17.43	5.02
GROUP 5	17.55	5.02
GROUP 6	14.77	5.02
GROUP 7	13.11	5.02

SCOPE OF WORK:

Open cut construction work shall be construed to mean work which requires the excavation of earth including industrial, commercial and residential **building** site excavation and preparation, land balancing, demolition and removal of concrete and underground appurtenances, grading, paving, sewers, utilities and improvements; retention, oxidation, flocculation and irrigation facilities, and also including but not limited to underground piping, conduits, steel sheeting for underground construction, and all work incidental thereto, and general excavation. Open cut construction work shall also be construed to mean waterfront work, piers, docks, seawalls, breakwalls, marinas and all incidental work.

Open cut construction work shall not include any structural modifications, alterations, additions and repairs to buildings, or highway work, including roads, streets, bridge construction and parking lots or steel erection work and excavation for the **building** itself and back filling inside of and within 5 ft. of the **building** and foundations, footings and piers for the **building**. Open cut construction work shall not include any work covered under Tunnel, Shaft and Caisson work.

OPEN CUT LABORER CLASSIFICATIONS

GROUP 1: Construction laborer

GROUP 2: Mortar and material mixer, concrete form person, signal person, well point person, manhole, headwall and catch basin builder, guard rail builder, headwall, seawall, breakwall,

dock builder and fence erector

GROUP 3: Air, gasoline and electric tool operator, vibrator operator, driller, pump person, tar kettle operator, bracer, rodder, reinforced steel or mesh person (e.g. wire mesh, steel mats, dowel bars, etc.), welder, pipe jacking & boring, person, wagon drill and air track operator and concrete saw operator (under 40 h.p.), windlass and tugger person and directional

boring person

GROUP 4: Trench or excavating grade person

GROUP 5: Pipe layer (including crock, metal pipe, multi-plate or other conduits)

GROUP 6: Grouting person, audio-visual television operations and all other operations in connection with closed circuit television inspection, pipe cleaning and pipe relining work

GROUP 7: Restoration laborer, seeding, sodding, planting, cutting, mulching and top soil grading; and the restoration of property such as replacing mailboxes, wood chips, planter boxes, flagstones, etc.

LABO0355K 06/01/2000

	Rates	Fringes
LAKE, MANISTEE, MASON, MECOSTA, MONTCALM, NEWAYGO, OCEANA AND OSCEOLA COUNTIES:		
MASON TENDER	17.04	4.97

FOOTNOTE:
Paid Holiday:
Fourth of July, if the worker has been employed by the contractor in any period of seven working days before said holiday within the current calendar year.

LABO1098H 08/01/2000

	Rates	Fringes
CLARE AND ROSCOMMON COUNTIES:		
LABORERS:		
GROUP 1	17.10	5.02
GROUP 2	17.22	5.02
GROUP 3	17.30	5.02
GROUP 4	17.60	5.02
GROUP 5	18.10	5.02
GROUP 6	18.10	5.02

LABORER CLASSIFICATIONS

GROUP 1: All construction laborers except workers falling within specified classifications; Also, pumps with a 3-in. or less discharge and not hooked up in battery, mechanized buggy operator & mortar mixer (when done by hand) and mason tender

GROUP 2: Mechanized mortar mixing; air, electric and gas driven tools

GROUP 3: Air or electric driven pavement breakers, concrete vibrator, plaster tender and plaster mixer, crock and/or pipelayer, signal person and top person on caisson work

GROUP 4: Tunnel miner, tunnel mucker and tunnel and shaft underpinning contributing to the structural support of buildings

GROUP 5: Driller & blaster, burner & welder

GROUP 6: Refractory work: Work inside or outside digesters,

tanks, lime kilns, chests, boilers and boiler tubes, heat treat ovens, and smoke stacks, including the handling of acid, chlorine, chemicals, epoxies, liquids and cleaning of existing precipitators, hydro blasting, hydro washing, and sandblasting

---

LABO1098I 05/01/2000

	Rates	Fringes
ALCONA, ANTRIM, BENZIE, CHARLEVOIX, CHEBOYGAN, CRAWFORD, EMMET, GRAND TRAVERSE, KALKASKA, LEELANAU, MISSAUKEE, OSCODA, OTSEGO, AND **WEXFORD** COUNTIES:		
LABORERS:		
Work inside or outside digester, tanks, lime kilns, chests, boilers, and boiler tubes, including the handling of acid, chlorine, chemicals, epoxies, liquids and cleaning of existing precipitators, hydro blasting, hydro washing, sandblasting	15.58	4.82
All other work:		
GROUP 1	14.58	4.82
GROUP 2	15.18	4.82

LABORER CLASSIFICATIONS

GROUP 1: All construction laborers on heavy construction work, except those in Group 2, mortar mixer, mason tender, carpenter tender, material mixer (whether done by hand or machine), vibrator operator, operator of concrete mixer, chipping hammer, tamping machine (whether run by air, electric, or gas), sandblaster, operator of motor-driven buggies, plaster mixer, plaster tender, pipe or crock layer, caisson work in buildings

GROUP 2: Concrete breaker (90 lb. hammer or less) and cement gun nozzle person

---

PAIN0845S 06/01/1998

	Rates	Fringes
NEWAYGO COUNTY (except the townships of Barton, Big Prairie, Brooks, Croton, Ensley, Everett, Goodwell, Grant, Home, Monroe, Norwich and Wilcox); AND OCEANA COUNTY:		
PAINTERS:		
Brush and roller	16.95	2.31
Brush (falling distance which exceeds 30')	17.45	2.31
Spray; Sandblasting; Hydroblast (handheld lance 5,000 PSI and over); Power grinders (7" disc or over)	17.70	2.31
Spray (falling distance which exceeds 30'); Sandblasting (falling distance which exceeds 30'); High work (all preparatorial work, sand blasting, and painting from a falling height exceeding 30 ft. on the following named structures: water tanks, gas		

holders, radio towers, church steeples, blast furnaces, smoke stacks, cracking plants, exterior cranes, but not including work performed from scaffolding or a platform or basket suspended from a crane or hoist) 18.20 2.31
Work performed in confined spaces 18.45 2.31

PAIN0845W 05/11/2000

	Rates	Fringes
MECOSTA AND MONTCALM COUNTIES; NEWAYGO COUNTY (Townships of Barton, Big Prairie, Brooks, Croton, Ensley, Everett, Goodwell, Grant, Home, Monroe, Norwich and Wilcox); OSCEOLA COUNTY (except the township of Marrion and the northeastern corners of Highland and Middle Branch):		
PAINTERS:		
Brush	15.16	5.66
Spray	16.16	5.66
Brush, swing stage; window jacks and belts	15.66	5.66
Spray or sandblast, swing stage; steeplejack	16.66	5.66
Steamclean	16.16	5.66
Waterblast; sandblast	16.91	5.66
Electric substations	16.66	5.66
Bridges over highways and railroads:		
Brush	15.41	5.66
Spray	16.41	5.66
Water - sandblast	16.91	5.66
Interior pipes closed vessels and closed tanks:		
Brush	15.66	5.66
Spray	16.66	5.66
Interior high work:		
Brush	16.66	5.66
Spray	17.66	5.66
Fireproofing work	16.16	5.66

FOOTNOTES:
Lead abatement work: $1.00 per hour additional.

---

* PAIN1803H 11/01/2000

	Rates	Fringes
ALCONA, ANTRIM, BENZIE, CHARLEVOIX, CHEBOYGAN, CLARE, CRAWFORD, EMMET, GRAND TRAVERSE, KALKASKA, LAKE, LEELANAU, MANISTEE, MASON AND MISSAUKEE COUNTIES; OSCEOLA COUNTY (north of Hwy. #10); OSCODA, OTSEGO, ROSCOMMON AND **WEXFORD** COUNTIES:		
PAINTERS:		
Work performed on water; bridges over water or moving traffic, radio and powerline towers,		

elevated tanks, steeples, smoke stacks over 40 ft. of falling heights, recovery of lead-based paints and any work associated with industrial plants, except maintenance of industrial plants	19.02	6.36
All other work, including maintenance of industrial plants	17.60	6.36

FOOTNOTES:
Spray painting, sandblasting, blowdown associated with spraying and blasting, water blasting and work involving a swing stage, boatswain chair or spider: $1.00 per hour additional.
All work performed inside tanks, vessels, tank trailers, railroad cars, sewers, smoke stacks, boilers or other spaces having limited egress not including buildings, opentop tanks,

pits, etc.: $1.25 per hour additional.
Work involving the actual installation of wallcoverings: $0.30 per hour additional.

PLAS0016I 06/01/2000

	Rates	Fringes
MONTCALM, NEWAYGO AND OCEANA COUNTIES:		
CEMENT MASON	18.15	6.05
PLASTERER	14.00	4.46

PLUM0085B 05/01/2000

	Rates	Fringes
ALCONA, ANTRIM, BENZIE, CHARLEVOIX, CHEBOYGAN, CRAWFORD, EMMET, GRAND TRAVERSE, KALKASKA, LEELANAU, MISSAUKEE, OSCODA, OTSEGO, ROSCOMMON AND **WEXFORD** COUNTIES:		
PLUMBER:		
Industrial work	25.04	9.83
All other heavy construction	22.05	9.83

PLUM0085K 05/01/2000

	Rates	Fringes
CLARE COUNTY:		
PLUMBER & PIPEFITTER	25.04	9.83

---

* PLUM0174C 01/01/2001

	Rates	Fringes
MECOSTA, MONTCALM AND OSCEOLA COUNTIES:		
PLUMBER & PIPEFITTER	25.66	9.47

FOOTNOTE:
Work that requires the use of a respirator with an outside air source: 10% per hour additional.

---

* PLUM0174H 01/01/2001

	Rates	Fringes

LAKE, MANISTEE, MASON, NEWAYGO AND OCEANA COUNTIES:

PLUMBER & PIPEFITTER	25.66	9.47

FOOTNOTE:
Work that requires the use of a respirator with an outside air source: 10% per hour additional.

PLUM0190G 05/01/1999

	Rates	Fringes
GAS DISTRIBUTION PIPELINE:		
Welding in conjunction with gas distribution pipeline work	24.10	7.77
All other work	15.44	5.62

ROOF0070L 06/01/1994

	Rates	Fringes
LAKE, MASON, NEWAYGO AND OCEANA COUNTIES:		
ROOFER	15.28	3.65

ROOF0070M 06/01/1993

	Rates	Fringes
MECOSTA AND MONTCALM COUNTIES:		
ROOFERS:		
Roofer and slater	13.10	3.90

ROOF0149K 05/01/2000

	Rates	Fringes
ALCONA, ANTRIM, BENZIE, CHARLEVOIX, CHEBOYGAN, CRAWFORD, EMMET, GRAND TRAVERSE, KALKASKA, LEELANAU, MANISTEE, MISSAUKEE, OSCEOLA, OSCODA, OTSEGO AND **WEXFORD** COUNTIES:		
ROOFERS:		
Roofer	15.00	5.35
Slater	17.00	5.35

ROOF0149L 06/01/1996

	Rates	Fringes
CLARE AND ROSCOMMON COUNTIES:		
ROOFER	17.76	5.02

SHEE0007Q 05/01/1999

	Rates	Fringes
LAKE, MASON, MECOSTA, MONTCALM, NEWAYGO, OCEANA AND OSCEOLA COUNTIES:		
SHEET METAL WORKER	22.56	6.31

SHEE0007R 05/01/1999

	Rates	Fringes
ALCONA, ANTRIM, BENZIE, CHARLEVOIX, CHEBOYGAN, CLARE, CRAWFORD,		

EMMET, GRAND TRAVERSE, KALKASKA, LEELANAU, MANISTEE, MISSAUKEE, OSCODA, OTSEGO, ROSCOMMON AND **WEXFORD** COUNTIES:

SHEET METAL WORKER	20.98	9.35

TEAM0007G 06/01/2000

	Rates	Fringes
TRUCK DRIVER:		
Trucks under 8 cu. yds.	21.62	.50 + a
Trucks, 8 cu. yds. and over	21.72	.50 + a
Euclids, double bottoms and lowboys	21.87	.50 + a

FOOTNOTE:
a. $241.90 per week.

WELDERS - Receive rate prescribed for craft performing operation to which welding is incidental.

==========

Unlisted classifications needed for work not included within the scope of the classifications listed may be added after award only as provided in the labor standards contract clauses (29 CFR 5.5(a)(1)(v)).

In the listing above, the "SU" designation means that rates listed under that identifier do not reflect collectively bargained wage and fringe benefit rates. Other designations indicate unions whose rates have been determined to be prevailing.

WAGE DETERMINATION APPEALS PROCESS

1.) Has there been an initial decision in the matter? This can be:

* an existing published wage determination
* a survey underlying a wage determination
* a Wage and Hour Division letter setting forth a position on a wage determination matter
* a conformance (additional classification and rate) ruling

On survey related matters, initial contact, including requests for summaries of surveys, should be with the Wage and Hour Regional Office for the area in which the survey was conducted because those Regional Offices have responsibility for the Davis-Bacon survey program. If the response from this initial contact is not satisfactory, then the process described in 2.) and 3.) should be followed.

With regard to any other matter not yet ripe for the formal process described here, initial contact should be with the Branch of Construction Wage Determinations. Write to:

Branch of Construction Wage Determinations
Wage and Hour Division
U. S. Department of Labor
200 Constitution Avenue, N. W.
Washington, D. C. 20210

2.) If the answer to the question in 1.) is yes, then an interested party (those affected by the action) can request review and reconsideration from the Wage and Hour Administrator (See 29 CFR Part 1.8 and 29 CFR Part 7). Write to:

Wage and Hour Administrator
U.S. Department of Labor
200 Constitution Avenue, N. W.
Washington, D. C. 20210

The request should be accompanied by a full statement of the interested party's position and by any information (wage payment data, project description, area practice material, etc.) that the requestor considers relevant to the issue.

3.) If the decision of the Administrator is not favorable, an interested party may appeal directly to the Administrative Review Board (formerly the Wage Appeals Board). Write to:

Administrative Review Board
U. S. Department of Labor
200 Constitution Avenue, N. W.
Washington, D. C. 20210

4.) All decisions by the Administrative Review Board are final.

END OF GENERAL DECISION

GENERAL SERVICES ADMINISTRATION PUBLIC BUILDING SERVICE SUPPLEMENTAL LEASE AGREEMENT	Supplemental Lease Agreement No. 1	Date: 2/11/02
	To Lease No.: GS-05B-16837	

ADDRESS OF PREMISES 1720 S. Mitchell St.
Cadillac, MI 49601

THIS AGREEMENT, made and entered into this date by and between:

Whose address is North Bogey Properties, LLC
c/o Mr. Tom Bowen
456 E. 16th Street
Holland, Michigan 49423

02-02-15A08:37 RCVD

hereinafter called the Lessor, and the UNITED STATES OF AMERICA, hereinafter called the Government:

WHEREAS, the Government has requested that the lessor install an Intrusion Detection/Duress system to provide security for the Government leased space located at 1720 S. Mitchell St. Cadillac, MI, in accordance with the specifications attached herein, and

WHEREAS, the lessor has agreed to install said Intrusion Detection/Duress system for the t (b) (4) [redacted] such cost to be reimbursed to the Lessor by the Government in a one-time, lump sum payment of [redacted] ance of said Intrusion Detection/Duress system, and an invoice from North Bogey Properties, LL[redacted]

Lessor also agrees to furnish and (b) (4) [redacted]
(b) (4) [redacted]

NOW THEREFORE, these parties for the consideration hereinafter mentioned covenant and agree that the said Lease is amended effective February 7, 2002 as follows:

1. The Lessor will install an Intrusion Detection/Duress system to provide security for the Government leased space located at 1720 S. Mitchell St. Cadillac, MI, in accordance with the attached specifications and requirements, which consist of 21 pages. Upon acceptance by the Government of the Intrusion Detection/Duress system and submittal of an invoice by the Lessor, the Government will pay Lessor a one-time, lump-sum payment of $[redacted] (b) (4) [redacted].

This is page 1 of 1

IN WITNESS WHEREOF, the parties subscribed their names as of the above date.

LESSOR: North Bogey Properties, LLC
(b) (6) [redacted]

BY [redacted] ACTING MEMBER

BY [redacted] (Title)

IN [redacted] 456 E. 16th St., Holland (Address)

UN[redacted]SERVICES ADMINISTRATION

BY [redacted] CONTRACTING OFFICER

2. The Lessor shall, pursuant to Change Order #2 of lease #GS-05B-16837 dated 4-25-01 section 5.15, install carpet tile and conduct slab preparation for carpet and vinyl tile per section 5.16. Upon acceptance of the space by the Government and submittal of an invoice by the Lessor, the Government will pay Lessor a one-time, lump-sum payment of (b) (4) [redacted].
3. The Lessor shall, pursuant to Change Order #3 of lease #GS-05B-16837 dated 8-14-01, install a Barrier Wall in the reception area. Upon acceptance of the space by the Government and submittal of an invoice by Lessor, the Government will pay the Lessor a one-time, lump sum payment of $(b) (4) [redacted]4

All other terms and conditions of the Lease shall remain in force and effect.

Init.: Lessor: ____ / Govt.: ____

16 JAN 02 1

General Service Administration
Federal Protective Service Division
110 Michigan N. W., Room 228
Grand Rapids, MI 49503

Pursuant to the following specification, Contractor shall provide all labor, materials and supervision necessary to perform all work described herein at the site whose address is listed below:

Social Security Administration
1720 ~~1700~~ S. Mitchell
Cadillac, MI 49601
MI2088ZZ.

All work is to be coordinated with the General Services Administration, Federal Protective Service Office, 110 Michigan NW, Room 228, Grand Rapids, Michigan 49503. Contact person is George Roberts. Mr. Roberts can be reached by telephone at (616) 766-0299. 776-0299

All work shall be scheduled for normal working hours only. Normal working hours are from 8:00am - 5:00pm, Eastern Standard Time, Monday through Friday, except federal holidays. Due to the necessity to maintain service to the public, the contractor shall not impair the operation of the office's at any time except during other than normal working hours mentioned above.

Included in this document:
Specifications
List of Equipment
Marked up floor plans
Contractor's Battle Creek MegaCenter alarm form

Scope of work for:

General Services Administration Contract to install a working Duress Alarm and Intrusion Detection System at:

Social Security Administration, ~~1700~~ 1720 S Mitchell, Cadillac, MI 49601
Building number **MI2088ZZ.**

Specification:

Install the duress alarm and intrusion detection system as follows:

.01 Provide and install high quality balanced magnetic contacts to the doors, interior motion detectors, glass bread sensors, duress buttons, and other associated equipment as shown on drawing. Comply with National Electrical Codes and Underwriter's Laboratories standard (UL1076) for proprietary alarm systems.

Init.: Lessor: / Govt.:

.02 Provide and install dual technology or passive infrared motion (PIR) detectors as noted on attached drawing. If PIR type is used, the units will utilize step focus optics and built in background disturbance indicator. Use of these indicators will prevent false alarms caused by environmental factors. Standard 360 degree ceiling PIR's pattern area coverage shall be used with all other detectors.

.03 Provide and install Alarm Control/Communicator Panel, Ademco Vista 50PUL, or equivalent, with additional Ademco Vista enclosure, or equivalent.

.04 Provide and install 2 Command Center digital keypads. One is to allow zone arm/disarm functions and to shunt out alarm for valid entry at door designated for employee entry/exit door. The second one is to be installed in the Office Managers office.

.05 Pull and connect proper (**plenum rated cable only**) twisted wire, at least #18, between the door contacts, motion detectors, Glass break sensors, Command Center digital keypad and the control/communicator panel.

.06 Wire mold is not approved for this installation unless approved by the Contracting Officer prior to installation. Wire mold shall match existing surface and be neatly installed. Concealed wiring shall be used in all locations.

.07 Grounding will be per manufacturers specifications and NFPA No. 70, where required.

.08 Provide and install high quality dual dry closure contacts (C./N.O./N.C.) to the work locations shown on the drawing. Comply with National Electrical Codes.

.09 Provide and install dual contact duress buttons that activate silently. Install as noted on attached drawing. If lighted type is used, the units shall be installed so that the light can not be seen by the "client". Use of these lights shall indicate alarm activation's. Install all duress buttons in inconspicuous locations.

.10 Each duress button indicated shall activate an separate associated light and activate a common sounder located in areas designated by the onsite Social Security Administration Office Manager. The sounder shall adjustable from no sound to full volume. The light display and sounder shall be located in an area where personnel responding to duress activation's can hear the sounder and see the light display while they are in route to the location of the duress activation.

.11 The volume controls for all sounders shall be have a range from no sound to full volume.

Init.: Lessor: YB / Govt.: Pd

3.1 Outline Specs

.01 The Command Center keypad will be interfaced with the control/communicator and telephone jack. Command center locations shall be selected by client agency manager at time of installation.

.02 Time delay will be set at least 15 seconds (time to adjustable and programmable) time of entry/exit delay will be determined at time of installation.

.03 The control/communicator panel shall be mounted in the general ADP/telephone room, at appropriate distance from other equipment which might cause interference.

.04 Telephone line jack shall be placed near the communicator.

.05 The control panel will be mounted at eye level.

.06 Contractor will mount the backup battery in the control panel cabinet.

.07 The Communicator lightning protection module shall be used.

.08 Contractor will contact 877-719-4894, Battle Creek MegaCenter for communication instructions, relay zone information, and account number.

.09 All devises shall be zoned and report to the alarm receiver in the monitoring stations separately.

Init.: Lessor: YB / Govt.: PW

SECURITY SYSTEMS SPECIFICATIONS

1. The system must comply for quality of products, design and performance with Underwriters Laboratories Standards for both central and proprietary intrusion detection systems. Successful offerer should refer to UL standard 611 for central station alarms and UL 1076 for proprietary alarm systems.

2. Shunt switches (access/secure switches) associated with intrusion detection systems protecting facilities will be installed within the protected zone(s) and be equipped with a time delay of sufficient duration to permit opening of securing of the protected zone(s) by authorized persons.

3. Control units associated with intrusion detection systems protecting facilities will be appropriately mounted within secure office space. With the exception of transmission lines and tamper-proof, local signaling devices, all component parts of sub-assemblies of intrusion detection systems protecting office spaces will be inaccessible from the exterior of the facility.

4. Systems protecting office space will conform with applicable UL standards relating to central station alarm systems.

5. Alarm contractor will program the system to contact the alarm receiver of Federal Protective Service Division. The station number (alarm account number) for the communication receiver will be determined by Federal Protective service.

6. Materials on the Site: Unless otherwise noted or specified, materials and equipment that are removed and not reused under this contract become the property of the Contractor, and salvage value shall be reflected in the bid.

7. Storage or sale of Equipment on the Site: Storage or sale of excess salvageable material on the site is not permitted. Remove from the site daily.

8. All installed security system equipment will have no less capabilities than the security equipment specified in the attached "List of Equipment."

9. The control/communicator panel and additional panel/enclosures.

Init.: Lessor: YB / Govt.: RW

1. GENERAL

1.1.1 The security System shall be of the proprietary type designed to transmit signals automatically over electrically or electronically supervised lines.

1.1.2 The contractor shall modify the drawings furnished under the solicitation to indicate the parameters (extent and location) of the Security System to be installed.

1.1.3 The design of the Security System including equipment, components and installation shall ensure that the entire system is inherently stable, defeat resistant, fail-safe, durable, reliable and suitable in every respect for satisfactory, long lasting, continuous operation and that is will require a minimum of maintenance and adjustment, all as defined in this requirement. Operation of the total system on a 24-hour day, under all normal variations of use, shall not result in more than an average of one unexplained (nuisance) alarm per year, per alarm zone.

1.1.4 Simplicity of Operation: The design of the Security System and the selection of equipment shall be such that all of the equipment can be operated by inexperienced personnel with a minimum of indoctrination in the system. Design shall incorporate optimum operator control interfacing for efficient operation.

1.1.5 Related Work: Provide accessories and miscellaneous items as required even though each item is not specifically shown on drawings, mentioned or described. Additionally refer to other sections of this specification or as maybe shown on drawings.

1.2 Applicable Publications:

1.2.1 The contractor shall provide the material, equipment or devices that meet the requirements of the Underwriters Laboratories Inc., (UL) latest edition as regards to all building security systems. The label of or listing by, The Underwriter's Laboratories, Inc., will be accepted as conforming with this requirement. In lieu of the label or listing, the Contractor may conform to the published standards of the Underwriters' Laboratories, Inc. For materials, equipment or devices that fall outside the scope of activity or the Underwriters' Laboratories, Inc., this requirement does not apply.

1.2.2 The National Electric Code (NEC) of the National Fire Protection Association (NFPA), and standards of the organization listed below are referenced herein. All work and equipment shall be manufactured, tested and installed in accordance with standard which are applicable.

(1) Electronic Industries Association (EIA)
(2) Underwriters' Laboratories, Inc. (UL)
(3) Insulated Power Cable Engineers Association (IPCEA)
(4) National Electrical Manufactures Association (NEMA)
(5) Institute of Electrical and Electronic Engineers (IEEE)
(6) American National Standards Institute (ANSI)
(7) National Fire Protection Association (NFPA)

1.3 Submittal:

1.3.1 No later than 10 days after award, the Contractor shall submit two –(2) copies of a complete schedule of materials, devices and equipment, including a list of manufactures, complete model numbers with related published technical specification and quantities of all the equipment which the Contractor proposes to incorporate in the systems to ghosts contracting officers representative. Additionally, the contractor shall provide catalog cut sheets of the equipment and wiring schematic diagram and/or block diagram with sufficient descriptive data. The literature furnished must be identified or marked exactly to show the item to which it pertains. These schedules must be approved by the government before work can proceed.

1.3.2 Along with the equipment descriptive literature, evidence shall be furnished that there is an experienced and efficient service organization within 100 miles of the project, which regularly carries a stock of the repair parts for the system to be furnished, and that the organization is capable of providing preventive maintenance and emergency service response to trouble calls as specified herein.

1.4 Guarantee:

1.4.1 The Security Systems installed under this contract shall be guaranteed against all defective materials, design and workmanship for a period of one year from the date of acceptance (GSA form 220 inspection report) signed for 100% payment by the Contracting Officer's Representative (refer to paragraph 3.6.3). New replacement parts shall be furnished promptly upon receipt of notice from the Government of failure of any part, without cost to the Government, of the guaranteed system during the guarantee period.

Init.: Lessor: ____ / Govt.: ____

2. Products:

2.1 Standard Products:

2.1.1 Unless specifically approved by the Contracting Officer, all material and equipment installed in the system shall be new and shall be the products of the manufacturers regularly engaged in the production of such equipment. In addition, they shall be the manufacturer's latest field proven standard designs available at the time of delivery, except for such modifications from the manufacturers standard as may be required to conform to these requirements. Where two or more units of the same class equipment are required, such units shall be the standard products of a single manufacturer. Manufacturers shall be so established in the industry that prompt continuing service and delivery of replacement parts may be assured.

2.1.2 Maintainability: Devices and equipment shall be designed and constructed to facilitate modular, unitized component replacement. Components shall be so arranged and assembled that they are readily accessible to maintenance personnel without compromising the defeat-resistance operation of the system Controls and adjustments inside enclosures, requiring manipulation by maintenance personnel, shall be readily visible and accessible with minimum disassembly of the equipment.

2.1.3 Interchangeability: Like units, assemblies, subassemblies and replaceable parts shall be physically and functionally interchangeable as complete items without modification. Individual items shall not be hand-picked for fit or performance. Reliance shall not be placed on any unsuspected dimension, rating, characteristic etc. Whether parts and subassemblies are readily replaceable will be determined by the Contracting Officer or his representative.

2.1.4 Manufactures Nameplates: Manufacturers nameplates will be securely and permanently affixed to each major component of the security system, and will be indented, embosses or silk-screened in a high quality way providing lasting identification. Each nameplate will as a minimum contain the manufacturer's name and complete model number or serial number of the component, currently available and identified in current publication or catalogs.

2.1.5 Workmanship: Workmanship during manufacture, assembly and installation of the Security System shall conform, in all respects, with the requirements of the associations listed hereinafter. Soldering, workmanship, wiring, cleaning, finishes and miscellaneous materials shall conform to these requirements.

Init.: Lessor: TB / Govt.: RW

2.1.6 Cabinets: Communicator cabinets shall be heavy gauge, welded steel construction with full hinged doors, paint finish shall be with prime coat and baked enamel finish coat. All cabinets shall include lock and 2 keys. When more than one cabinets shall include lock and 2 keys. When more than one cabinet is installed on a project, they shall be keyed alike. All cabinets will have tampers switches on the doors and for removal from the walls to which they are affixed.

2.1.7 Junction Boxes: All security system junction boxes where splices are required shall be provided with terminal strips, which shall be suitable for type of wire installed.

2.2 Equipment Housing and Cabinets:

2.2.1. Construction: Enclosures for monitor panels, power supplies, cabinets, alarm devices and detection equipment, and other system components shall be so formed and assembled as to have ample strength and rigidity necessary to resist the abuses to which they are likely to be subjected. They shall be constructed of sheet steel, except where the function of the equipment makes the use of this material prohibitive, and shall be not less than No. 16 U. S. Standard Gauge. Access doors shall have locks meeting the requirements of 2.2.3.

2.2.2 Environmental Requirements: All components shall be capable of full operation under the following conditions:

1) Humidity: Up to 85 percent relative humidity.
2) Temperature: Any ambient temperature in the range from 32 degrees F. to 95 degrees F. for indoor use.

2.2.3. Locks and Key Lock Switches: All locks on equipment and power supply enclosures for maintenance access shall be keyed alike and two keys furnished for the entire system. The contractor shall exercise every precaution to protect the security of these keys. Upon completion of the work, the keys shall be delivered properly tagged to the Contracting Officer.

2.2.4. Tamper Switches: Enclosure and junction boxes (except main security monitor panel) shall be provided with cover operated, corrosion-resistant tamper switches to actuate an alarm signal before access to equipment within the enclosures is gained. The tamper switch mounting hardware shall be concealed so that the location of the switch cannot be visually detected from the exterior of the enclosure.

2.3 Not used in this specification.

2.4 Remote Signaling Equipment:

Init.: Lessor: YB / Govt.: RW

2.4.1 Digital Communicators: The digital communicator shall be microprocessor controlled with re-programmable Random Access Memory (RAM) or with Electronically Erasable Programmable Read Only Memory (EEPROM) and shall transmit individual signals for each alarm device in the system including individual tamper switches. In addition they must be capable of generating Automatic Test Reports in accurate programmable intervals (1 hr. - 28 days) timed by the communicators internal clock, additionally, the units must transmit also battery supervision report.

2.4.2 Transmitters when activated by switch open or closure on the End of Line Resistor (EOLR) terminated initiating circuit must dial touch tone or rotary, two separate preprogrammed telephone numbers (up to sixteen (16) digits) for dual monitoring. Upon completion of the dial sequence, the Communicator will report its own preprogrammed unique account number and alarm point contact identification format.

2.4.2.1 Where device tamper switches have been wired to the alarm control panel the Communicator shall transmit a separate individual supervisory/tamper signal and alarm signal for each of the alarm device.

2.4.3 The Digital Communicators shall be installed, wired, programmed and connected to the specified security system and shall be programmed to send the Chicago processor a test signal at a predetermined interval (1hr. - 28 days). The contractor shall provide the applicable specific zone descriptions that will pin point the alarm locations form person responding to the alarm and for programming the Communicators receiving equipment. The alarm contractor is responsible for programming the equipment to make sure the alarm signals can be received. The alarm monitoring center has Surguard and Osborne Hoffman alarm recievers with contact identification RS232 format.

2.4.4 Basic Communicator operations is as follows: The alarm processor in is brought on line by a signal transmitted by the Digital Communicator transmitter. The central then commands the calling Communicator to transmit its report. The report is transmitted two times and stored in separate registers and compared bit for bit. If the comparison yields identical data in the register the central processor enunciates the report. If the comparison does not yield identical data in the registers an error message is generated and is displayed and enunciated at the central processor. Should the report not get through, the Communicator must attempt to get through 10 times before shutting down; should the message fail to be transmitted after 10 times the Communicator shall maintain its status and report during its next programmed test cycle. It will hang up and call the second alarm receiver and complete the same process mentioned above.

2.4.5 The Communicator and associate equipment shall be contained in the same surface wall mounting, attack resistant, medium gauge (not less than 20), welded steel cabinet with full hinged and locking door. Finish cabinet front and door prime coat and baked enamel finish coat. Provide two (2) keys.

Init.: Lessor: TB / Govt.: [signature]

2.4.6 The Digital Communicator must be provided with a minimum of twenty four (24) hour battery backup with automatic charger. Also, provide a line seizure and lightning protection, used to protect the Communicator from lightning. The unit must be pre-registered with the Federal Communication Commission (FCC) for direct telephone line connection.

2.4.7 Line Protection: Provide a line seizure lightning protection module, used to protect the communicator from lightning. The unit must be pre-registered for direct telephone line connection.

2.4.8 Typical communicator wiring with line seizure.

2.5. Alarm Devices - The detecting units shall be so located in the designated area with a minimum of nuisance alarms caused by vibration. The system shall not be sensitive to thunder, sonic boom, flying insects, air currents or surges in connected electric power. Intermittent or complete failure of the system shall initiate an alarm, all enclosures shall be protected by tamper switches.

2.5.1 Balanced Magnetic Switches: The balance magnetic switches shall be of the type which opens and crosses the circuit when actuated. The switch mechanism shall be of the balanced magnetic type which initiates an alarm upon increase, decrease of attempted substitution of magnetic field applied to the switch when in the normally secured position. The mechanism shall be adjustable so that the operation gap between faces of the switch to accommodate installation variances.

2.5.1.1. Switch, magnet, and line connector shall be housed in weatherproof boxes cast of nonferrous metal. The cover of the magnet housing shall not be easily removable. Covers of cast aluminum switch boxes shall be secured by stainless screws. The switch boxes shall have flanges cast into the housing cover, which prevents access into the interior of housing without activation a tamper switch.

2.5.1.2 Balanced magnetic switches shall be mounted so an alarm is initiated wherever the latching or lead edges of the closure is moved as much as one inch form its closed position. Provide standoff spacers as necessary to align magnet and switch assemblies.

2.5.2 Passive Glass Breakage Detectors: Shall be of the type with electronic discrimination circuits that detect only the intermolecular noises present in breaking glass, the detectors shall cause no false alarm due to shock, vibration, temperature change or bending. Each unit shall have latching circuit and LED indicator so the alarmed detector can be isolated.

2.5.2.1 If the detectors provided require a tester to periodically test the detectors the tester shall be provided by the contractor.

2.5.2.2 Reset switches shall be provided to reset each loop.

Note: Passive infrared detectors shall be used in lieu of glass breakage detectors: where glass breakage detectors are not feasible for use. This change must be approved by the Contracting Officer's Representative, in advance.

2.5.2 Passive Infrared Detector: Detector shall project a minimum of 18 detection beams, have a field of view of 90 degree horizontal and 30 degree vertical (or 360 degree ceiling mounted with three pattern path, direct down, short range and long range) and have gain/ temperature compensation circuit.

2.5.2.1 The detector shall have SPDT output relay and separate tamper switch output.

2.5.2.2 Unit will be powered by a 12 volt power supply and have a battery that will provide 24 hours of standby time. Battery manufactured date must be within 90 days of installation.

2.5.2.3 The radiating and detecting units shall be so located in the designated area that maximum coverage is afforded, with a minimum of nuisance alarms caused by motion outside the boundaries of the area. The system shall not be sensitive to thunder, sonic boom, flying insects, air currents or surges in connected electric power. Intermittent or complete failure of the system shall initiate an alarm, all enclosures shall be protected by tamper switches.

2.5.2.4 Performance: The systems shall initiate an alarm signal when person walks four consecutive steps at a rate of on step per second. Such a four-step movement shall constitute a trial and an alarm shall be initiated at every trial made, moving progressively throughout the protected area. No adjustments to any part of the system shall be permitted during the trials.

2.5.3 Digital Key Pad Alarm Control Shunt: The digital key pad shall have no less than 12 push buttons and shall be capable of single digit arming.

2.5.3.1 The digital key pads shall be tamper proof so status cannot be altered nor can the combination be detected by removing the key pad.

2.5.3.2 The key pads shall have Liquid Crystal Display to indicate the status of each device it is controlling. The display must be capable of alpha-numeric, up to 32 characters and have view tilt.

2.5.3.3 Any improper entry will void the combination.

2.5.3.4 The key pad shall be capable of 700 code combinations programmed by simple operation.

Init.: Lessor: YB / Govt.: PW

2.5.3.5 The key pads shall operate in conjunction with the control panel arm-inhibit circuit.

2.5.3.6 The key pads shall be equipped with tamper switches.

Init.: Lessor: YB / Govt.: PW

3. EXECUTION:

3.1 Where existing, the Contractor shall remove all existing alarm equipment (including wiring) and return the equipment to the government.

3.1.2 The contractor shall furnish, install and connect/reconnect as applicable all equipment and wiring to fully receive signals from remote devices, enunciate alarm and supervision, acknowledge and transmit alarm to FPSD monitoring facilities.

3.1.2.1 The Contractor shall provide and install one of the following type telephone interface jacks RJ31X, RJ33X or RJ38X determined by the type of existing telephone circuit to be used. The telephone circuit shall be connected in such a manor that if an alarm is present on the communicator the communicator will seize the phone line circuit and transmit the alarm to the central processors. The telephone jack will be connected to the telephone number that the agency management chooses.

3.1.3 The contractor shall provide all wiring: quantities, types of conductors and size shall be as required by the manufacturer of the respective equipment being installed. Conductors shown on drawings are for bidding purposes only.

3.1.4 The system shall be installed by a qualified security specialist with at least 3 years experience in security system installation.

3.1.5 Definition: The term "Specialist" as used in this specification shall mean an individual or firm of established reputation (or, if newly organized, whose personnel have regularly engaged on and which maintains a regular force of workman skilled in either (as applicable) manufacturing or fabricating items required by the contract, installing items required by the contract, or otherwise performing work required by the contract. Where the contract specification requires installation by a specialist, that term shall also be deemed to mean either the manufacturer of the item, an individual or firm who will perform the work under the manufacturer's direct supervision.

3.1.6 Wiring and Cable: **Use plenum rated cabling only.** All wiring and cables shall comply with pertinent sections of the National Electrical code where applicable. Wiring shall be neat and sturdy. Wires shall not be bent sharply where they enter insulating material. Wires shall be properly placed and supported to prevent undue stress on the conductors. Groups of wires and cables no in conduit shall be properly laced and secured.

3.1.6.1 Power Wiring: Shall not be routed in common runs with low voltage signal wiring. Power wiring runs shall be so arranged that they do not introduce unwanted signals or currents into the signal wiring.

Initials: Contractor YB / Govt. PW

3.1.6.2 Grounding: Conductors, ground conductors, conduits, junction boxes, cabinets, cable messengers and all non-current-carrying metallic parts of the equipment shall be grounded in accordance with NFPA No. 70.

3.1.8 Repair of existing work shall be carefully laid out in advance. Where cutting, channeling, chasing or drilling is done in any part of the building during installation, these parts shall be repaired and refinished by skilled mechanics of the trades involved, and all cleaning us and debris, removal accomplished, all at no additional cost to the Government. Conduit and fittings which run exposed on finished walls and below ceilings shall be painted with two coats of paint to match the surfaces on which they are run.

3.2 Verification of Site Conditions:

3.2.1 The contractor shall verify all dimensions and conditions at the site before starting any portion of the work under this contract.

3.3 Programming:

3.3.1 The Contractor shall be fully responsible for programming the communicators and prove service to the FPS monitoring center. Refer to Base program 3.9 of this section of the specifications.

3.3.2 The Contractor shall request programming information relating to phone numbers and account numbers. The request shall be to the Operations Manager, in writing, via fax, at the time of installation the system. In the letter, the Contractor shall provide GSA with a connected advice listing which zone is connected to each point of the communicators.

3.4 The Contractor shall provide internal wiring of each communicator.

3.5 Spare parts:

3.5.1 The following spare parts shall be provided:
One spare fuse for each fused circuit in the system.
Ten spare lamps for each lamp type furnished in the system.
One spare door contact for each type provided in the system.

3.6 Test:

3.6.1 Upon completion of the installation complete performance tests of each device, switch, control unit, power supply, battery, battery standby charging supply, each monitoring panel, key pad and all other equipment and material required by the contract shall be conducted in the presence of the Contracting Officer, or his representative.

Initial Lessor: YB / Govt.: PW

3.6.2 Following these tests and following the training period, the Government shall conduct a reliability test for a continuous period of one month to determine overall system conformance to all the applicable requirements of this contract. Contractor personnel will not be allowed at the site during this burn-in period except at the request of the Contracting Officer or his representative.

3.6.3 Acceptance by the Government will be given after completion of the installation, satisfactory completion of the security system performance and reliability tests and receipt by the Government of all required drawings and documents. Then the guarantee period will begin.

3.7 As-Installed Drawings and Documentation:

3.7.1 Upon completion (within thirty calendar days) of the work, the Contractor shall neatly modify the approved shop drawings to show details of the system as actually installed, including all modifications which have been approved during the course of the contract and provide wiring diagrams showing numbered terminal points, wiring diagram of individual components and schematics of all electrical of electronic equipment used.

3.7.2 The Contractor shall furnish a (one –[1])manual containing all necessary information to enable untrained personnel to operate, and trained personnel to test and maintain the system, and to include all pertinent drawings, schematics, tables, charts, and photographs. The manual shall incorporate the following information:

(1) Covers: Front and back covers shall be of durable stock with the following printed on the front cover; Title with correct nomenclature; contract number; date of publication; proprietary notice to read, "Prepared Under Contract No. by (name of Contractor), for the General Services Administration".

(2) Title page: The title page shall be of the same information which appears on the front cover.

(3) Table of contents: The table of contents shall list all important subdivisions of the manual.

(4) General: The general section shall contain detailed information on the equipment included in the Security System. It shall include: system operation; installation notes; bill of materials; manufacturers model and serial numbers for all equipment; maintenance and adjustment; trouble shooting; and schematic, assemble, wiring and interconnecting diagrams of the circuits, internal and external, for all equipment.

(5) Technical Section: The technical section shall contain the detailed information on the equipment included in the Security System. It shall include: system operation; installation; bill of materials including manufacturers with model and serial numbers; maintenance and

adjustment; trouble shooting; and schematic, assemble, wiring and interconnecting diagrams of all circuits, internal and external, for all equipment.

(6) Operation Section: The operation section shall contain recommended procedures for operation of each device, as well as the monitor station as a consolidated system.

3.7.3 One –(1) copy of the as-installed drawings and the manual shall be furnished to the Contracting Officer's Representative.

Init.: Lessor: TB / Govt.: [illegible]

3.8 Instructions:

3.8.1 Without additional expense to the Government, competent control equipment manufacturer of his authorized representative personnel shall give instruction for the care, adjustment and operation of all parts of the system to the Government employees who are to have charge of the equipment.

3.8.2 Each instructor shall be thoroughly familiar with all parts of the installation on which he is to give instruction and shall be trained in operating theory as well as in practical operation and maintenance work.

3.8.3 Furnish up to (4) hours of instruction one week prior to testing and after installation at agency management request. Additionally, furnish one set of manuals one week prior to the instruction period.

3.9 Communicator Base Program: will be given to successful bidder by Federal Protective Service (FPS) monitoring Operation Managers at time of installation. For instructions call 877-719-4894.

4.0 Maintenance Service:

4.1 Maintenance service shall be provided for the security system herein after specified.

4.2 All maintenance work shall be performed by skilled personnel directly employed and supervised by the same firm engaged to furnish the system specified herein after.

4.3. Unless otherwise specified, all work shall be performed during regular hours of regular working days of the trade. The dates and hours of work shall be scheduled in a manner acceptable to the Building Manager and the maintenance personnel shall register with the proper Government authority upon entering and leaving the building.

4.4 Unless otherwise specified, the maintenance service shall apply to all parts of the systems and equipment installed under this section and shall include the following:

(1) Systematic examinations not less frequent than one every three months.

(2) Cleaning, adjusting, repairing and replacing of all parts as necessary to keep the equipment in first class condition and proper working order, exclusive of any work required as a result of improper use, accidents or negligence for which the contract is not directly of indirectly responsible.

(3) Furnish all cleaning materials and parts required.

Initial Contractor: YB / Gov't: PW

(4) Providing emergency service consisting of promptly responding to request from the Building Manager of his authorized representative by telephone or otherwise, for emergency service within two hours of the trouble call on any day of the week, at any hour, day or night, as necessary to restore service with 8 hours in cases where emergency trouble should develop between regular examinations. Any temporary repairs must be made permanent within 48 hours of the temporary repair.

4.5 In the event the Building Manager of his authorized representative authorizes in writing, the performance of any portion of the maintenance work except emergency service, during overtime hours, the Government shall pay, at established billing rates, for the difference between regular and overtime labor and any expenses incident solely to performance of the work during overtime hours.

4.6 The Contractor shall save and keep harmless and indemnify the Government against any and all liability, claims and costs of whatsoever kind and nature for injury or death of any person or persons and for loss or damage to any property (Government or otherwise) resulting in whole or in part from the negligent acts. Fault or omissions of the Contractor any subcontractor or any employee, agent or representative or the contractor or any subcontractor in the performance of the maintenance service work specified herein.

5.0 Service:

5.1 Service shall be provided for the security system herein after specified.

5.2 All service work shall be performed by skilled personnel directly employed and supervised by the same firm engaged to furnish the system specified herein after.

5.3. Unless otherwise specified, all work shall be performed during regular hours of regular working days of the trade. The dates and hours of work shall be scheduled in a manner acceptable to the Building Manager and the maintenance personnel shall register with the proper Government authority upon entering and leaving the building.

5.4 Unless otherwise specified, the service shall apply to all parts of the systems and equipment installed under this section and shall include the following:

(1) Cleaning, adjusting, repairing and replacing of all parts as necessary to keep the equipment in first class condition and proper working order, exclusive of any work required as a result of improper use, accidents or negligence for which the contract is not directly of indirectly responsible.

(2) Furnish all cleaning materials and parts required.

(3) Providing emergency service consisting of promptly responding to request from the Building Manager of his authorized representative by telephone or otherwise, for emergency service within two hours of the trouble call on any day of the week, at any hour, day or night, as necessary to restore service with 8 hours in cases where emergency trouble should develop between regular examinations. Any temporary repairs must be made permanent within 48 hours of the temporary repair.

5.5 In the event the Building Manager of his authorized representative authorizes in writing, the performance of any portion of the service work except emergency service, during overtime hours, the Government shall pay, at established billing rates, for the difference between regular and overtime labor and any expenses incident solely to performance of the work during overtime hours.

5.6 Contractor use of the Existing Building: Maintain the existing building in a safe and weather-tight condition throughout the construction period. Repair damage caused by the construction operations. Take all precautions necessary to protect the building and its occupants during the construction period.

LIST OF EQUIPMENT:

Organization Office: 5PS-4D
Project Control #: 2000-39

Estimate by:
George Roberts Jr.

Location:
Social Security Administration
YB 1720 ~~1700 S~~. Mitchell
Cadillac, MI 49601
Building# MI2088ZZ

Project Purpose:
Intrusion detection & duress system.

Description of items (Intrusion & Duress system)	**Material REQD**	**Unit**
control equipment:		
Ademco, Vista 50PUL, control communicator/alarm panel with U.L. listed cabinet, transformer, & lock.	1	Ea
Ademco, 6139, Alpha numeric keypad.	2	Ea
Yuasa NP712 7AH 12VDC Battery	2	Ea
Ademco, 4208U, 8 zone expander module.	3	Ea
Dolphin Components Corp., DC-3112, RJ31X jack & cord.	1	Ea
Ademco, 955, control tamper switch with 953WH bracket.	1	Ea
perimeter system field equipment:		
SENTROL 1087 Door Contacts	3	Pr
Visonic, Disc/AS PIR 360 degree lens	2	Ea.
Blue Grass 901 Passive Glass Break Sensors	8	Ea.
Beldon 87XXX or 82XXX Plenum 22 AWG Cable	As needed	
Duress equipment:		
United Sec. Prod. HUB2B, duress buttons.	9	Ea
Ademco, 710, strobe warning light, clear lense	2	Ea.
Mallory sonalert 64F288,6-28 VDC, soft sound.	1	Ea
Quam, type QC-10, 20 W, volume controls.	1	Ea.
Security systems training for agency employees	4	Hours

Does not include electrician providing power for systems.

Initial Lessor: YB / Govt: PW

Contact Identification for:

Social Security Administration, ~~1700~~ 1720 S Mitchell, Cadillac, MI 49601, Building number MI2088ZZ.

1.	Control Tampers (on panel in ADP room)	instant
2.	Front (public entrance East side)	burglary
3.	Employee entrance door (on North, Exit/entry delay)	burglary
4.	Emergency exit door (on South side)	burglary
5.	Vestibule (East public entrance) glass break sensor	burglary
6.	East side (N. of public entrance) glass break sensor	burglary
7.	North east area glass break sensor	burglary
8.	Loop output (to expander modules)	
9.	North west corner glass break sensor (Mgr. Office)	burglary
10.	South west corner (multi-purpose room) glass break	burglary
11.	South west (multi-purpose room) glass break	burglary
12.	South east corner glass break sensor	burglary
13.	East side(S. of public entrance) glass break sensor	burglary
14.	Duress desk one	instant duress
15.	Duress desk two	instant duress
16.	Duress desk three	instant duress
17.	Duress desk four	instant duress
18.	Duress desk five (receptionist)	instant duress
19.	Duress desk six	instant duress
20.	Duress desk seven	instant duress
21.	Duress desk eight	instant duress
22.	Duress Manager's desk	instant duress
23.	Front employee hallway motion (PIR)	interior follower of point 3
24.	Automated Data Process (ADP) room motion (PIR)	instant

(b) (5)

CHANGE ORDER NO. 2
DATED: 4-25-2001
LEASE NO. GS-05B-16837

The lease is amended to incorporate the following changes. If there is a conflict in the wording, this change order takes precedence. All other provisions of the lease shall remain unchanged.

5.15 CARPET TILE (APRIL 2000)

All space occupied by the Government shall be provided with carpet tile meeting the following specifications. (Resilient flooring shall be provided in areas identified elsewhere in this Solicitation.)

Interface Flooring Systems, Inc. MoistureGard carpet tile is to be newly installed and must meet the following specifications:

·Pile Yarn Content: staple filament or continuous filament branded by a fiber producer (Allied, Dupont, Monsanto, BASF), soil-hiding nylon.

·Carpet pile construction: tufted level loop, level cut pile, or level cut/uncut pile.

·Pile weight: ~~28~~ 26 ounces per square yard is the minimum for level loop and cut pile. 32 ounces per square yard is the minimum for plush and twist.

·Total weight: minimum of 130 ounces per square yard.

·Density: 100 percent nylon (loop and cut pile) -- minimum of 4000; other fibers, including blends and combinations – minimum of 4500.

·Pile height: minimum of 1/8 inch.

·Static buildup: maximum of 3.5 KV, when tested in accordance with AATCC-134.

·Carpet construction: minimum of 64 tufts per square inch.

·Ability to be installed in areas of excessive moisture (up to 10 lbs. per 1,000 square feet within 24 hours).

·Environmental requirements: Lessors shall use carpet tile that meets the "Green Label" requirements of the Carpet and Rug Institute.

Adherence to the Recycled Content Products (Comprehensive Procurement Guidelines) (JUL 2000) is not required as a part of this section, CARPET TILE (2000).

Adhesive used in the installation of carpet tile must meet manufacturer guidelines and standards (adhesive recommended by carpet tile manufacturer is suggested) to make certain the proper function of carpet tile and further ensure warranty is not voided.

Any and all changes to the above specification must be approved in writing by the contracting officer prior to installation (i.e. installation of carpet tile equal in quality and ability to Interface Flooring Systems, Inc. MoistureGard).

5.16 SLAB PREPARATION FOR CARPET AND VINYL TILE (APRIL 2000)

Floor preparation prior to installation of the carpet must meet the criteria as identified by the Carpet and Rug Institute publication No. CRI 104 (phone: 800-882-8846) and includes, but is not limited to the installation of a moisture barrier prior to pouring of slab (for new construction). Prior to installing carpet and vinyl tiles, the Lessor must provide written certification that alkalinity and moisture tests have been conducted, and that alkalinity and moisture levels are within he criteria established by Interface Flooring Systems, Inc. for MoistureGard carpet tile (or the manufacturer of approved equal). Included in the certification the Lessor must provide the moisture and alkalinity test data. No tiles are to be laid until written approval is given by the contracting office for another method to be used to make the slab acceptable for the installation of tiles. All costs incurred and any delays in accepting the space by the Government due to the slab not meeting the requirements are the Lessor's responsibility. The Lessor is strongly encouraged, as soon as possible after award, to obtain a copy of the Carpet and Rug Institute publication and to take the necessary steps to prepare the slab to meet the requirements. For new construction, plans to meet the requirements should be in place before the slab is poured.

CHANGE ORDER NO. 3
DATED: 8/14/01
LEASE NO. GS-05B-16837

The lease is amended to incorporate the following changes. If there is a conflict in the wording, this change order takes precedence. All other provisions of the lease shall remain unchanged.

Barrier wall in the reception area

See Attachment 6

1. A wall will enclose the reception area. It will have an opening one foot from the ceiling. The wing walls separating the the employee workstations can be ceiling height to anchor the wall.

   The wall will have at least one door and cased openings through which interviewing will be accomplished. Additional doors will be added when the space configuration requires them. The door will be standard size and equipped with an automatic door closer, locking panic hardware on the inside, with a five button combination lock and lever hardware on the reception area side of the door. The door will open toward the reception area and have a vertical light within 10" of the latch side of the door. The light should be 6" wide and 5' long and consist of a non-breakable transparent material.

2. Seven (7) cased openings will be 30" from the floor, 45" wide and 36" high. There will be 36" between these cased openings, where space permits. Ceiling-high partitions will be constructed on the reception side, separating each cased opening. The partitions will be 48" deep. Exact locations will be indicated on the approved layout.

3. Each cased opening (with the exception of the light in the door) will be equipped with a countertop roll shutter of the following quantity or equivalent.
   a. QMI Roll Shutter Supply, 933 North Oak Lawn Avenue, Elmhurst, IL 60126, Phone: 800-446-2500, Fax; 630-782-1911, web site: www.qmishutters.com. Model: PV-2, with rebars every third slat.
   b. A.C. Rolling Shutter Company, 2310 Superior Avenue, Cleveland, Ohio 44114, Telephone (216) 441-9400, fax: 216-441-9600.

   The shutter will be made of PVC or Aluminum, with the raising mechanism and lock being operable on the employee side of the shutter only. The raising mechanism may be a manual strap for windows of 48 inches or less in width, and a strap crank for windows over 48 inches in width. The lessor shall replace straps and cranks if they are broken, and shall replace all straps every five years.

4. At the base of each interviewing window, a shelf with adequate supports, and with an edge designed so as to not present safety hazards, will project 10" to 12" on the reception side.

5. Vinyl wall covering will be used on reception area walls in accordance with the "Wall Covering: Physical Requirements" paragraph in the ARCHITECTURAL FINISHES section of this Solicitation.

6. An exposed factory finished painted metal louver must be provided on each side of the partition above the case opening. Opening size must be verified with the Lessor's mechanical contractor.

INITIALS: _____ & _____
LESSOR GOV'T

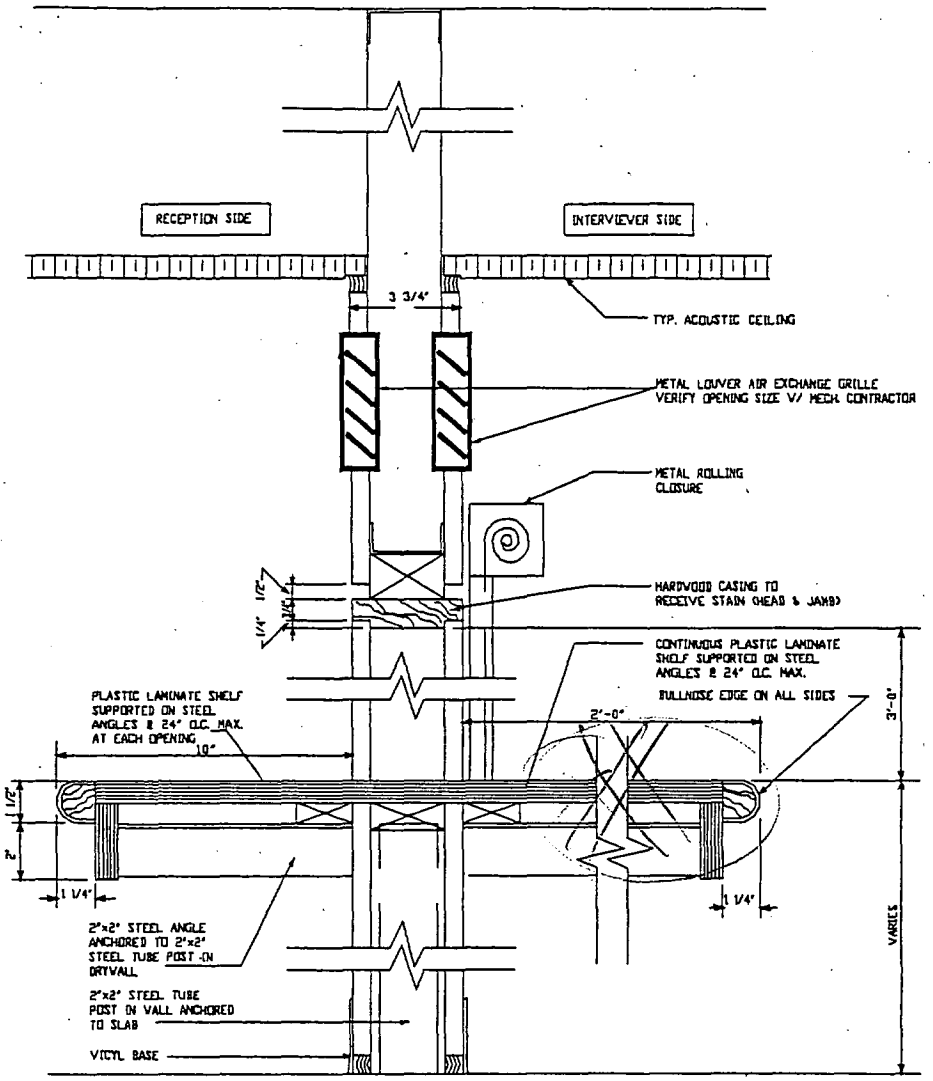

CASED INTERVIEW OPENING-RECEPTION

SCALE: 3"=1'-0"

INITIALS: LB & PW
LESSOR GOV'T

(b) (5)

CHANGE ORDER NO. 4
DATED: 9/12/01
LEASE NO. GS-05B-16837

The lease is amended to incorporate the following changes. If there is a conflict in the wording, this change order takes precedence. All other provisions of the lease shall remain unchanged.

- Add the following paragraphs in Section 5 (as Paragraph 5.2A):

5.2A Electrical Riser System Information:

Provide one copy of the Electrical Construction Documents within thirty (30) days after receipt of Government provided design intent floorplans indicating the following:

- Written statement regarding whether or not the ceiling is used as a return air plenum

- Riser Diagram Drawing including:
    a. Service voltage
    b. Service entrance type & service entrance equipment size
    c. Switchboard and panelboard schedules including voltage, mains, main circuit size, and number/location of spare/space's available
    d. Interconnection of all switchboards, panelboards, and transformers
    e. Sizes of all feeders to switchboards and panelboards

- Floor Plan(s) which include:
    a. Location of incoming service, utility meter, and service entrance equipment
    b. Location of all switchboards, panelboards and transformers

Note: SmithGroup's scope of work is to provide electrical and data construction documents for the entire IWS/LAN computer system and the association Systems Furniture, only. The above information is needed prior to submittal of the related sealed construction drawings and specifications.

CHANGE ORDER NO. 3
DATED: 8/14/01
LEASE NO. GS-05B-16837

The lease is amended to incorporate the following changes. If there is a conflict in the wording, this change order takes precedence. All other provisions of the lease shall remain unchanged.

Barrier wall in the reception area

See Attachment 6

1. A wall will enclose the reception area. It will have an opening one foot from the ceiling. The wing walls separating the the employee workstations can be ceiling height to anchor the wall.

   The wall will have at least one door and cased openings through which interviewing will be accomplished. Additional doors will be added when the space configuration requires them. The door will be standard size and equipped with an automatic door closer, locking panic hardware on the inside, with a five button combination lock and lever hardware on the reception area side of the door. The door will open toward the reception area and have a vertical light within 1.0" of the latch side of the door. The light should be 6" wide and 5' long and consist of a non-breakable transparent material.

2. Seven (7) cased openings will be 30" from the floor, 45" wide and 36" high. There will be 36" between these cased openings, where space permits. Ceiling-high partitions will be constructed on the reception side, separating each cased opening. The partitions will be 48" deep. Exact locations will be indicated on the approved layout.

3. Each cased opening (with the exception of the light in the door) will be equipped with a countertop roll shutter of the following quantity or equivalent.
   a. QMI Roll Shutter Supply, 933 North Oak Lawn Avenue, Elmhurst, IL 60126, Phone: 800-446-2500, Fax; 630-782-1911, web site: www.qmishutters.com. Model: PV-2, with rebars every third slat.
   b. A.C. Rolling Shutter Company, 2310 Superior Avenue, Cleveland, Ohio 44114, Telephone (216) 441-9400, fax: 216-441-9600.

   The shutter will be made of PVC or Aluminum, with the raising mechanism and lock being operable on the employee side of the shutter only. The raising mechanism may be a manual strap for windows of 48 inches or less in width, and a strap crank for windows over 48 inches in width. The lessor shall replace straps and cranks if they are broken, and shall replace all straps every five years.

4. At the base of each interviewing window, a shelf with adequate supports, and with an edge designed so as to not present safety hazards, will project 10" to 12" on the reception side.

5. Vinyl wall covering will be used on reception area walls in accordance with the "Wall Covering: Physical Requirements" paragraph in the ARCHITECTURAL FINISHES section of this Solicitation.

6. An exposed factory finished painted metal louver must be provided on each side of the partition above the case opening. Opening size must be verified with the Lessor's mechanical contractor.

INITIALS: _____ & _____
LESSOR GOV'T

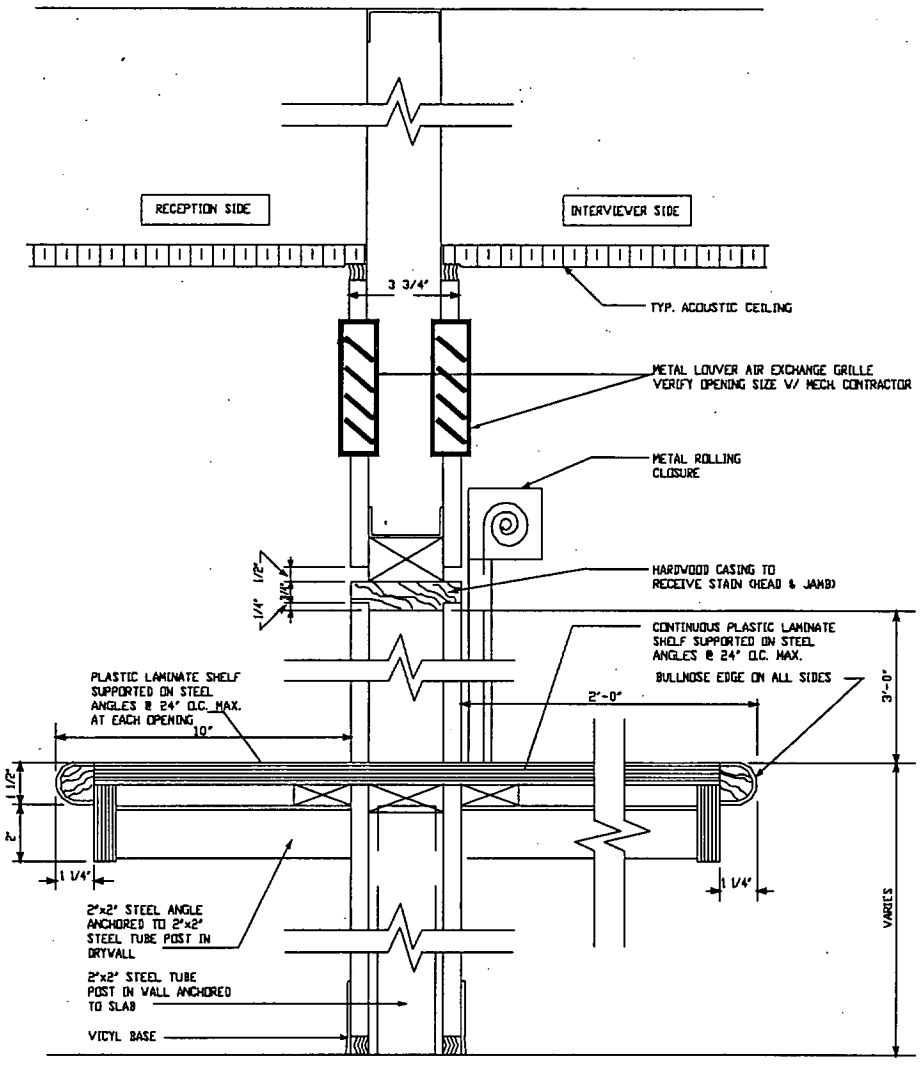

CASED INTERVIEW OPENING-RECEPTION

SCALE: 3"=1'-0"

INITIALS: LB & PW
LESSOR GOV'T

RECEIVED PARS-
MAY 01 9:04

CHANGE ORDER NO. 2
DATED: 4-25-2001
LEASE NO. GS-05B-16837

The lease is amended to incorporate the following changes. If there is a conflict in the wording, this change order takes precedence. All other provisions of the lease shall remain unchanged.

5.15 CARPET TILE (APRIL 2000)

All space occupied by the Government shall be provided with carpet tile meeting the following specifications. (Resilient flooring shall be provided in areas identified elsewhere in this Solicitation.)

Interface Flooring Systems, Inc. MoistureGard carpet tile is to be newly installed and must meet the following specifications:

·Pile Yarn Content: staple filament or continuous filament branded by a fiber producer (Allied, Dupont, Monsanto, BASF), soil-hiding nylon.

·Carpet pile construction: tufted level loop, level cut pile, or level cut/uncut pile.

·Pile weight: 28 ounces per square yard is the minimum for level loop and cut pile. 32 ounces per square yard is the minimum for plush and twist.

·Total weight: minimum of 130 ounces per square yard.

·Density: 100 percent nylon (loop and cut pile) -- minimum of 4000; other fibers, including blends and combinations -- minimum of 4500.

·Pile height: minimum of 1/8 inch.

·Static buildup: maximum of 3.5 KV, when tested in accordance with AATCC-134.

·Carpet construction: minimum of 64 tufts per square inch.

·Ability to be installed in areas of excessive moisture (up to 10 lbs. per 1,000 square feet within 24 hours).

·Environmental requirements: Lessors shall use carpet tile that meets the "Green Label" requirements of the Carpet and Rug Institute.

Adherence to the Recycled Content Products (Comprehensive Procurement Guidelines) (JUL 2000) is not required as a part of this section, CARPET TILE (2000).

Adhesive used in the installation of carpet tile must meet manufacturer guidelines and standards (adhesive recommended by carpet tile manufacturer is suggested) to make certain the proper function of carpet tile and further ensure warranty is not voided.

Any and all changes to the above specification must be approved in writing by the contracting officer prior to installation (i.e. installation of carpet tile equal in quality and ability to Interface Flooring Systems, Inc. MoistureGard).

5.16 SLAB PREPARATION FOR CARPET AND VINYL TILE (APRIL 2000)

Floor preparation prior to installation of the carpet must meet the criteria as identified by the Carpet and Rug Institute publication No. CRI 104 (phone: 800-882-8846) and includes, but is not limited to the installation of a moisture barrier prior to pouring of slab (for new construction). Prior to installing carpet and vinyl tiles, the Lessor must provide written certification that alkalinity and moisture tests have been conducted, and that alkalinity and moisture levels are within he criteria established by Interface Flooring Systems, Inc. for MoistureGard carpet tile (or the manufacturer of approved equal). Included in the certification the Lessor must provide the moisture and alkalinity test data. No tiles are to be laid until written approval is given by the contracting office for another method to be used to make the slab acceptable for the installation of tiles. All costs incurred and any delays in accepting the space by the Government due to the slab not meeting the requirements are the Lessor's responsibility. The Lessor is strongly encouraged, as soon as possible after award, to obtain a copy of the Carpet and Rug Institute publication and to take the necessary steps to prepare the slab to meet the requirements. For new construction, plans to meet the requirements should be in place before the slab is poured.

-RECEIVED FARS-
22 MAY 01 9:03

CHANGE ORDER NO. 1
DATED: 4-25-2001
LEASE NO. GS-05B-16837

The lease is amended to incorporate the following changes. If there is a conflict in the wording, this change order takes precedence. All other provisions of the lease shall remain unchanged.

SSA INTELLIGENT WORKSTATION/LOCAL AREA NETWORK (IWS/LAN) REQUIREMENTS FOR SITE PREPARATION

8.10.1 IWS/LAN CONFIGURATION--GENERAL INFORMATION

The IWS/LAN components located in the SSA office will consist of bridges, token ring LAN's, workstations, and printers. The bridge equipment will consist of an IBM compatible PC attached to the Wide Area Network (WAN) via high speed 56k bit dedicated telephone lines and attached to the LAN via token ring adapter. The LAN will consist of an IBM compatible PC file server equipped with fixed disk storage, CD-ROM, removable storage, tape backup, and FAX machine.

The file server and LAN management PC will be attached to token ring Control Access Units (CAU's) and Lobe Attachment Modules (LAM's) via token ring adapters. The CAU's will be rack-mounted with patch panels to allow easy reconfiguration of cabling.

Workstations consist of IBM compatible PC desktop computers with fixed disk storage, floppy disk storage, and token ring adapters for connection to the LAN via the LAM's. Laser printers and dot matrix printers will be attached to the LAN either at the file server, workstation, or centrally located to the workstations via token ring interface.

All of the critical components of the LAN rack will be powered by an Uninterruptable Power Supply (UPS) in case of power failure. The UPS shall be provided by others.

Lessor is not responsible for the installation of the equipment -- only the site preparation.

If the work is to be done in an existing, operating SSA office, the SSA operation must continue the contractor must provide proper phasing of the work so as not to interfere with SSA operations.

8.10.2 HEATING, VENTILATION, AND AIR CONDITIONING (HVAC) REQUIREMENTS

The ADP room shall be maintained between 68 degrees and 78 degrees Fahrenheit. The HVAC system must be capable of maintaining ± 2 degrees F. of the thermostat setting. This condition must be maintained 24 hours a day, 7 days a week. HVAC shall be thermostatically controlled within the room and be independent of the house system. The equipment located in the ADP room will be operational 24 hours a day, 7 days a week.

The IWS/LAN equipment located in the office area will operate in a standard office environment.

INITIALS: _____ & _____
LESSOR GOV'T

8.10.3 MATERIALS AND EQUIPMENT TO BE PROVIDED BY THE LESSOR AS PART OF THE LEASE

DATA CABLE AND ACCESSORIES

1. Category 5E PVC cables, Bertek # ~~532141~~ 532281 or equivalent in non-plenum ceilings; Mohawk # ~~M56093~~ M56168 or equivalent in plenum ceilings.
2. Category 5E RJ-45 T568A connector; AMP # 1116604-3 or equivalent.
3. Category 5E modular patch panel to be mounted in IWS/LAN rack and data outlets as needed to serve IWS/LAN workstations and equipment.
4. Faceplates, AMP SL series mounted in recessed outlet box inside columns or walls. Provide surface mounted box if interior of wall or column cannot be accessed.
5. Free standing single-device housings with a faceplate and a magnetic backing (IBM # 4760486) for all IWS/LAN equipment fed through the modular furniture.
6. A 12" wide wire mesh cable tray, mounted vertically on wall of ADP room behind LAN rack, extending from 6 inches above the ceiling to 6 inches from the floor for routing the data cables.
7. A No. 6 AWG copper ground conductor with THHN insulation, installed in ¾- inch conduit from the LAN rack location to the isolated ground electrical panel (Panel RP-G) that provides power to the LAN rack. Terminate one end of the #6 ground conductor at the equipment ground bus in panel RP-G and leave 10 feet of #6 ground conductor neatly coiled at the LAN rack end for future connection to the LAN rack (by others) terminated with a ground lug.
8. One 4'x8'x1/2" sheet of plywood painted to match ADP room wall color. Mount at the Telephone switch location.

ELECTRICAL EQUIPMENT AND ACCESSORIES

1. One isolated ground panelboard (to be identified as RP-G) with the following features:
   - 208Y/120 volt, 3-phase, 4-wire with fully rated neutral bus and separate copper ground and isolated ground buses.
   - Minimum short-circuit rating of 10,000 RMS amperes.
   - Main circuit breaker, minimum ampacity equal to 125 percent of the total connected load as called for in this package and shown on the approved floor plans plus 25 percent space capacity based on equipment loads as listed in the table below.
   - Bolt-on type, 20 ampere, molded-case branch circuit breakers. Provide 25 percent spare breakers.
   - Typed circuit directory card matching the installed circuit layout.
2. General purpose receptacle panelboard (to be identified as RP-A) with the following features:

INITIALS: _____ & _____
LESSOR GOV'T

- 208Y/120 volt, 3-phase, 4-wire with fully rated neutral bus and separate copper ground bus.
- Minimum short-circuit rating of 10,000 RMS amperes.
- Main circuit breaker, minimum ampacity equal to the total load as called for in this package and shown on the approved floor plans, plus 25 percent spare capacity, sized per NEC requirements.
- One 3 -pole branch circuit breaker to feed panel RP-G sized to match the main circuit breaker in RP-G.
- Bolt-on type, 20 ampere, molded-case branch circuit breakers. Provide 20 percent spare breakers.
- Typed circuit directory card matching the installed circuit layout.

3. Isolated ground (IG) duplex receptacles, orange colored, NEMA 5-20R, Hubbell IG 5362, Arrow Hart IG 5362, or equal; orange colored.

4. General purpose duplex receptacles, ivory colored, NEMA 5-20R, Hubbell, Arrow Hart, or equal.

5. Building wire, THHN/THWN insulation, solid or stranded copper wire for No. 10 AWG and smaller; stranded copper wire for sizes No. 8 AWG and larger. Provide minimum size of No. 12 AWG.

8.10.4 SITE PREPARATION

1. ELECTRICAL INSTALLATION - GENERAL

A) Install electrical equipment and accessories in accordance with the National Electrical Code and all local codes and ordinances.

B) Install branch circuiting in electrical metallic tubing (EMT), minimum size 3/4". Install no more than three homeruns per conduit. Compression fittings are to be used on all conduit connections.

C) Do not install isolated ground and non-isolated ground circuits in the same conduit.

D) For non-isolated ground circuits provide one equipment ground wire per conduit run.

E) For isolated ground circuits provide one neutral and one isolated ground wire for each circuit. In addition, provide one equipment ground wire per conduit run.

F) Metal-clad cable, Type MC, may be installed recessed in walls if all neutral wires, isolated ground wires and equipment ground wires as listed above are contained in the cable.

G) Provide color coding on 208Y/120 volt feeders and branch circuits as follows:

- Phase A - black
- Phase B - red
- Phase C - blue
- Neutral - white (provide red plastic tape at each splice point for neutral wires originating from the isolated ground panelboard.

INITIALS: _____ & _____
LESSOR GOV'T

- Ground - green
- Isolated Ground - Green with yellow bands or stripes. Solid green wire with yellow tape at splice/termination points is not acceptable.

H) Provide color coding on 480Y/277 volt feeders and branch circuits as follows:

- Phase A - brown
- Phase B - orange
- Phase C - yellow
- Neutral - white
- Ground - green

2. ELECTRICAL INSTALLATION - ISOLATED GROUND POWER

A) Install RP-G in the ADP room. Do not locate the panel in the zone identified for the LAN rack.

B) Provide a power feeder to the panel, preferably originating from RP-A, consisting of three phase conductors, one full-size neutral, one equipment ground (minimum No. 6 AWG) and one isolated ground conductor (minimum No. 6 AWG).

C) The isolated ground conductor feeding RP-G must originate from either the building service ground or the neutral/ground bond of the local 208Y/120 volt transformer feeding RP-G and it must be run inside the feeder conduit. Provide one continuous isolated ground conductor from point of origin to RP-G.

D) Provide isolated ground branch circuiting to isolated ground (IG) duplex receptacles in IWS/LAN systems furniture workstations. Connect a maximum of four workstations per 20-amp circuit. Provide an isolated ground (IG) duplex receptacle and isolated ground branch circuiting for each IWS/LAN workstation not associated with systems furniture, such as in the Manager's Office. The approved floor plan will show the location and number of workstations.

E) Provide an IG duplex receptacle and isolated ground branch circuiting for each IWS/LAN printer (LP or DP), fax (FX), scanner workstation (SWS), and image server (IS). The approved floor plan will show the location and quantities.

F) Provide two IG duplex receptacles, and isolated ground branch circuiting for each LAN rack shown on the approved floor plan. Connect both receptacles to the same phase but on separate dedicated circuits.

G) All the receptacles for the computer equipment shall be isolated ground (IG) type and shall meet requirements of NEC 250-74 Exception No. 4.

H) Adhere to the following for maximum number of isolated ground receptacles per circuit and connection criteria. Maximum load per circuit is 16 amps.

INITIALS: _____ & _____
LESSOR GOV'T

Equipment	Load (Amps)	Maximum Per Circuit	Allowable Connection Criteria
Workstation (IWS)	4.0	4	Only with other workstations or image server; not with printers, faxes, or scanner workstation.
Laser Printer (LP)	7.8	2	With other printers, faxes or scanner workstation.
Digital Copier (DC)	12.0	1	Dedicated circuit
Dot Matrix Printer (DP)	2.5	4	With other printers, faxes or scanner workstation.
Fax (FX)	5.0	4	With other printers, faxes or scanner workstation.
Scanner Workstation (SWS)	3.5	1	With printers, or faxes.
Image Server (IS)	6.0	1	Only with other workstations or by itself; not with printers, faxes, or scanner work-station.
LAN Rack (Critical equipment)	2	1	Dedicated circuit (same phase as LAN rack non-critical equipment).
LAN Rack (Non-critical equipment)	2	1	Dedicated circuit (same phase as LAN rack critical equipment).

l) Label each isolated ground receptacle with the panel designation and circuit breaker number it is connected to (e.g. "G-14"). Place typed, self-adhesive label on receptacle faceplate. Handwritten labels are not acceptable. Identify each breaker at the panel and the devices it serves on the circuit directory.

INITIALS: _____ & _____
LESSOR GOV'T

3. ELECTRICAL INSTALLATION - GENERAL PURPOSE POWER

A) Install panel RP-A within SSA controlled space preferably in the electrical closet serving the floor SSA occupies.

B) Connect general purpose furniture receptacles to panel RP-A. Provide two circuits of different phases to each workstation telepower pole and connect the number "1" or "a" general purpose receptacles to one phase and the number "2" or "b" receptacles to the other. Connect not more than 10 receptacles per circuit. The same circuits may be used to serve multiple workstation groupings if the maximum number of receptacles per circuit is not exceeded.

C) Provide additional standard electrical circuits and install receptacles as shown on the approved floor plan.

D) Other building general purpose receptacles, mechanical loads and lighting may be connected to RP-A.

4. DATA CABLE INSTALLATION

A) Install cable in neat symmetrical lines parallel to the centerlines of the building construction.

B) Do not splice cable.

C) Install cable in single runs between outlets and IWS/LAN rack in ADP room.

D) Leave six inches of slack cable behind each outlet and 15 feet of slack cable as measured from the bottom of the wire mesh cable tray in the ADP room. After termination of cable onto patch panel and installation of patch panel into LAN rack coil excess cable in cable tray.

E) Provide modular patch panel(s) and mount in IWS/LAN rack provided by SSA's LAN vendor. Provide sufficient ports in patch panel(s) for 10 per cent spare capacity.

F) Data cable is to be a continuous run with no splices or butts and without kinks or sharp turns. The cable must not be laid immediately adjacent to fluorescent light, A/C power lines of motorized devices. Data cable must be installed to maintain the maximum separation from A/C power lines, six inches minimum.

G) Support all cables in ceiling space on adjustable J-hooks rated for Category 5E cable with rolled edges and integral retainer clips. Provide J-hooks at 5 feet on - center.

H) Ground cable tray according to N.E.C.

I) Install cable in modular furniture within internal cable raceways.

J) Terminate data cable at both ends with RJ-45 connector per TIA/EIA 568-A standards, with T568A wiring configuration.

INITIALS: _____ & _____
LESSOR GOV'T

K) Install data connector into patch panel in ADP room and into faceplate at each data outlet as indicated on plans.

L) Faceplates - Wall Mounted

1. Install each faceplate located at columns or walls in separate, recessed, wall-mounted outlet boxes.

M) Faceplates - Mounted in Herman Miller furniture systems.

1. Install either of the two methods listed below. Use the same method on all furniture.

   a. Install surface mounted faceplate with Herman Miller adapter.
   b. Install faceplate on raceway at base of systems furniture at unused power or data receptacle opening.

N) Faceplates - mounted in OEI furniture systems

1. Install surface mounted faceplate with OEI adapter.

O) Identify all the data cables at both ends by self-adhesive machine lettered (not handwritten) labels with the following numbering scheme. Attach labels onto faceplate of each data outlet and patch panels in ADP room.

1. Workstation cables - "C0001", "C0002", etc. (match the numbers with the modular furniture cubicle numbers, followed by workstations not associated with modular furniture, such as the Manager's Office).

2. Workstations in training area - "C" followed by four digit number in continuation of the workstation cable numbers under "1" above.

3. Laser printers - "C" followed by four digit number in continuation of the training workstation cable numbers under "2" above.

4. Digital Copiers – "C" followed by four digit number in continuation of the laser printer cable number under "3" above.

5. Line printers - "C" followed by four digit number in continuation of the digital copier cable number under "4" above (one per office).

6. FAX machine - "C" followed by four digit number in continuation of the line printer cable number "5" above.

7. Scanner Work Stations-"C" followed by four digit number in continuation of the FAX cable number "6" above (one per office).

8. Image Server-"C" followed by four digit number in continuation of the scanner workstation number under "7" above (one per office).

P) Cable Bundling

1. Bundle and loosely tie-wrap cables, sequentially in groups of twelve beginning with C0001, in the ADP room.

INITIALS: _____ & _____
LESSOR GOV'T

2. Wrap cables with Velcro-type straps in a manner that allows cables to be connected to LAN ports as needed by SSA. Do not use plastic tie-wraps.

5. CABLE TESTING

A) Per TIA/EIA-TSB67 testing standards.

6. AS-BUILT DRAWINGS

A) Mark up, and provide to the local SSA manager, a desk layout drawing to show an "as built" status for electrical and data cabling, including an identification of all electrical and data circuits.

B) Discuss all cabling drawing with the local manager to assure that all marked-up drawings are clear and understood.

8.10.5 SOCIAL SECURITY ADMINISTRATION MODULAR FURNITURE INSTALLATION MODIFICATIONS TO SITE

Lessor's site preparation may include upgrading the electrical distribution system, providing new transformers, feeders, and electrical power panels with an isolated grounding (IG) system if the existing system is not adequate to meet needs as stated in this package. It shall also include installing new branch circuit wiring for convenience and IG receptacles and installing data cables for computer hardware. The quantity of computer equipment required by this package may increase the HVAC requirements.

The data communications equipment that is not based in the ADP room will be located in the general office area.

Site preparation modifications shall be completed in two phases.

Phase I work involves upgrading the electrical distribution system and providing transformers, feeders and power panels as needed. This includes the installation of additional electrical ducts, conduit, and junction boxes near the modular furniture access points that will be identified on the designer's exact furniture layout and electrical schematic. It also includes upgrading the electrical system, providing new transformers, feeders, and electrical power panels with an isolated grounding (IG) system to meet needs as stated in this package, and installation of additional wiring/cabling from electrical power panels to junction boxes, telephone closets, and the Intelligent Workstation/Local Area Network (IWS/LAN) rack to access IWS/LAN workstations and printers. This phase of site preparation is to be completed prior to the installation of the modular furniture.

Phase II work occurs during modular furniture installation completed by a government contractor. It is anticipated that the electrician's work will begin approximately half way through the furniture installation. The exact scheduling of the Phase II work will be discussed in detail at the pre-installation meeting about 45 days prior to the installation of the furniture. This phase involves installing data and telephone cabling (telephone cable will be installed by a telephone contractor provided by the government) as described below. The lessor is required to connect the pigtail leads from the modular furniture to the wiring in the junction boxes, test all the prewired receptacles in the modular furniture, install data

INITIALS: _____ & _____
LESSOR GOV'T

cables in the modular furniture raceways, and terminate all the data cables with the specified connectors. All of the Phase II site preparation work must be coordinated and done in conjunction with the furniture movers, furniture installers, and the telephone installers. Once Phase II work begins, it shall continue until the entire project is completed, including the installation of all modular furniture, electrical, data and telephone cabling. Exact schedules will be determined approximately 45 days before furniture installation occurs. The General Services Administration (GSA), the lessor, SSA, and contractors will meet to establish the schedule. It is anticipated that Phase II work will be completed in 5 calendar days which will probably include a Saturday and Sunday. Some areas of the office, such as reception and front end interviewing, may be identified as critical and will need to be completed in less than 5 days.

Note: The telephone cabling is not a part of the lessor's site preparation, but site preparation work must be coordinated with and accommodate a telephone contractor (provided by the government) to do the necessary cabling for the telephone system. The lessor shall provide conduit and junction boxes and wall plates for wall mounted telephone outlets in locations to be identified on the plans.

A. BACKGROUND ON THE SPECIFICS OF ELECTRICAL, TELEPHONE, AND DATA CABLING OF MODULAR FURNITURE PANELS

SSA will install prewired modular furniture. The office space shall be prepared electrically to power the furniture. GSA will provide a plan indicating the furniture layout and computer equipment to contractor.

The furniture is fitted with isolated ground receptacles and convenience receptacles. A group of furniture workstations are connected together electrically and terminate into an eight wire flexible whip, of which only seven wires are used. The whips will be passed through power poles and left in ceiling space for termination to electrical junction boxes by the lessor's electrical contractor. In case the office space is provided with an underfloor duct system for power distribution, the furniture whips will be left at the floor for termination into floor mounted junction boxes by the lessor's electrical contractor.

1. The modular furniture will be provided with both electrified and non-electrified panels.

2. The electrified panels will be provided with two separate metal raceways, one for power wiring and the other for data and telephone cables. Details of the modular furniture panels will be furnished to the successful offeror after lease award.

3. The raceway for power wiring will be located horizontally at the bottom of the furniture panel; the raceway for the data and telephone cables will be located horizontally at the top of the furniture panel.

4. The two raceways for power wiring, and for the data and telephone cables will be interconnected by vertical metal raceways at the corners and ends of some panels. These raceways are fitted with easily accessed raceway covers.

5. The modular furniture is provided with a prewired electrical system. The raceway is a plug-in type bus duct with a provision for plugging in power feed and receptacles. The bus duct has 8 conductors composed of four phase conductors, two neutral conductors, and two ground conductors.

INITIALS: _____ & _____
LESSOR GOV'T

SSA has chosen to use only 7 conductors. One of the phase conductors is not used. Two phase conductors, a neutral conductor, and an equipment ground conductor power two convenience outlet circuits. A third phase conductor, second neutral conductor, and an isolated ground conductor power an isolated ground receptacle circuit.

The furniture manufacturers offer 6 types of NEMA 5-20 receptacles. These are identified by numbers 1 through 6. Each type of receptacle, when plugged into a bus duct connects to a certain combination of phase, neutral, and ground conductors.

SSA has opted to procure only three types of receptacles, which are No. 1, No. 2, and No. 5. (In Herman Miller furniture, the outlets are identified as A, B and C.) Receptacles No. 1 and No. 2, when plugged into the bus duct of the modular furniture connect to two different phase conductors, a common neutral conductor, and an equipment ground conductor. These are ivory in color and make up convenience outlets. Receptacle No. 5, when plugged into the bus duct of the modular furniture, connect to the third phase conductor, another neutral conductor, and the isolated ground conductor. These are orange in color and make up isolated ground outlets.

6. The modular furniture is also provided with empty raceways for telephone and data communication cabling to be utilized by SSA. The data cables installed in the bottom raceway along the power bus duct shall be kept to a minimum.

7. Panel schedules and circuit designator shall be provided for modular furniture isolated ground receptacles (type No. 5) and convenience receptacles (type No. 1 and type No. 2).

8. To accommodate the snap-in receptacles, the furniture panels will be prewired to meet the following requirements:

   - One circuit for a maximum of ten (10) No. 1 convenience duplex receptacles and ten (10) No. 2 convenience duplex receptacles.
   - One dedicated circuit for no more than four IG duplex orange receptacles for four IWS/LAN workstations and image server.
   - No more than two IG orange outlets for two laser printers, other printers, fax machines and scanner workstations.

NOTE: Depending on the configuration of the space offered, the printers and possibly some of the IWS/LAN workstations may be located outside of the modular furniture configuration. The lessor must furnish and install data cabling, electrical wiring, and IG electrical outlets as described in the IWS/LAN sections of these special requirements in those locations.

9. The furniture panel manufacturer will provide power poles with pigtails as an integral part of the furniture panels that will be coordinated by the furniture installer with the reflected ceiling plan. The pigtails will normally extend about 2 feet from the top end of the power poles. Extra length pigtails up to 18 ft. can be requested if necessary.

10. The electrical wiring to power pole raceways will consist of an electrical harness with 20-ampere capacity, UL approved, 8-wire system. The system can be connected to 208Y/120 volt, three phase service by using seven wires. (The pink wire is not

INITIALS: _____ & _____
LESSOR GOV'T

used.) The system can also be connected to 120/240 volt, single-phase service by using six wires. (The red and pink are not used.)

11. All the raceways for power, data and telephone will be provided with a safety ground in accordance with the latest edition of the NEC.

B. LESSOR REQUIREMENTS AND RESPONSIBILITIES - PHASE I

1. ELECTRICAL - The lessor shall:

a. Provide additional electrical power requirements such as transformers, power panels RP-A and RP-G, and feeders, as required to meet the anticipated power demands. If the office needs an air-cooled step down transformer, it shall be located a minimum 8 feet away from the ADP room. **This electrical riser information and a diagram of the electrical panels and feeders must be supplied to GSA within 30 days of the lease award. This information will be forwarded to SSA's electrical engineering firm to use for construction drawings for IWS/LAN and systems furniture installation.**

b. Determine the type of existing electrical service, e.g., 208Y/120 volts, 3 phase; or 480Y/277 volts, 3 phase; or 120/240 single phase. Verify that building service and transformer are large enough for the additional electric load.

c. Provide Isolated Grounding System as indicated in SSA's Official Policy on the following pages.

d. Provide wall or floor receptacles for IWS/LAN workstations, printers, etc. and IWS/LAN rack outside of the modular furniture area. These will be shown on the designer prepared floor plans. An IG duplex receptacle is required for each IWS/LAN workstation, printer, digital copier, fax, scanner, image server, and two IG receptacles are required for the IWS/LAN rack. Provide branch circuit wiring from the electrical power panels not to exceed the dedicated circuit requirements listed in paragraph A. 8. above.

e. Provide and install additional electrical outlets and telephone outlets outside of the modular furniture area in accordance with GSA specifications and where shown on the designer prepared floor plan.

f. Furnish and install suitably sized junction boxes, sufficient to handle the load, above the ceiling (with conduit) in the vicinity of the feeding points of the modular furniture panels.

g. Provide branch circuit wiring from power panels to the junction boxes combining circuits in different junction boxes and other IG duplex receptacles so as not to exceed the maximum limits indicated in A. 8. above.

h. Provide grounding wire for the LAN rack per "IWS/LAN Rack Grounding Detail" below. The LAN rack will be delivered and installed by SSA's IWS/LAN contractor.

i. Temporarily cap-off the wiring in the junction boxes until modular furniture installation. Make all connections in power panels and keep the circuit breakers off.

INITIALS: _____ & _____
LESSOR GOV'T

j. Mark each circuit with the breaker number and the computer hardware (IWS/LAN workstation, printer, or IWS/LAN rack) to be connected to it. Identify each breaker at the panel and the devices it serves. Identify receptacles on the electrical layout drawing with the same standard alpha/numeric marking system. It is especially important that all circuits be clearly identified at the breakers of the power panel, the junction boxes, and on the electrical layout drawing to preclude error and facilitate connections in Phase II of the project.

k. Electrical conductors shall be labeled with a numerical code corresponding to the circuit breaker protecting the circuit.

2. DATA CABLING - The lessor shall:

a. Provide category 5E, unshielded twisted pair data cables from the IWS/LAN rack in the ADP room to each of the printers and IWS/LAN workstations. Provide hangers and support for the cables in accordance with industry standards.

The total length of each cable will vary in accordance with the equipment location, office layout, and space configuration. Equipment distribution will generally be uniform throughout the work area.

A total of 24 individual data cables with connectors will be required.

b. Provide category 5E data connectors, patch panels, and wire mesh cable tray.

c. Identify all data cables at both ends by machine lettered (not handwritten) labels.

3. OTHER CONSTRUCTION

The lessor shall complete all other construction and alterations necessary to comply with this solicitation for offers. As phase II work, which is described below, is being completed the office must be ready for immediate use by SSA Personnel.

C. LESSOR REQUIREMENTS AND RESPONSIBILITIES - PHASE II

1. ELECTRICAL - The lessor shall:

a. Connect the pigtails of the pre-wired furniture panels to the branch circuit wiring in the junction boxes.

b. Turn on the circuit breakers in the power panels for the circuits feeding modular furniture and test each receptacle in the furniture to verify that it is energized and connected properly.

c. Identify each receptacle in the modular furniture by circuit number and the power panel, and update the directory in the power panel. Provide details on the electrical layout schematic to show the "as-built" status for all of the receptacles. A copy of the "as-built" plans shall be provided to the local manager.

d. Provide a grounding wire for the LAN rack.

INITIALS: _____ & _____
LESSOR GOV'T

2. DATA CABLING - The lessor shall:

   a. Complete installation of the data cables from the IWS/LAN rack in the ADP room through the modular furniture panel raceways to each IWS/LAN workstation and each printer. Complete remaining installation of data cables outside of the modular furniture configuration.

   b. Install data connectors at both ends of all data cables installed.

   c. Make sure that both ends of each of the data cables are properly labeled. Provide details on the electrical layout schematic to show the "as-built" status for all the data cables.

   d. Conduct testing of each channel (i.e. from the jack at the office end to the jack at the patch panel in the ADP room) for all data cable runs in accordance with TIA/EIA Testing Standards.

3. The lessor shall certify and submit the final "as-built" drawings, including the modular furniture wiring and cabling, to the local SSA manager.

   All electrical/cabling work shall be performed in conformance with local electrical codes.

D. SCHEDULING AND COORDINATION

1. Lessor shall coordinate the access to the office with the local manager where space is currently occupied.

2. SSA may arrange to have the telephone equipment vendor complete the necessary telephone site preparation (precabling) activities during Phase I.

3. Following completion of Phase I site preparation, the office will be ready for furniture installation (Phase II). The agency will schedule a pre-installation meeting with GSA, the furniture installer, the telephone contractor and the lessor and his electrical and data cabling contractor(s). The meeting agenda will include clarification of Phase II activities, scheduling and determination of the specific Phase II installation start and end dates.

4. It shall be necessary for the lessor to have an adequate number of electricians on the job to keep pace with the furniture installers. Once the furniture installation begins on the designated date, the installation will proceed until the entire office has been completed.

5. All electrical/cabling work shall be completed in conformance with local electrical codes. GSA shall make final approval of the work performed.

E. INSPECTION AND AS-BUILT PLAN REQUIREMENTS

INITIALS: _____ & _____
LESSOR GOV'T

1. A pre-occupancy inspection of the completed work is to be made with representatives of the lessor, general contractor, electrical contractor, GSA, and SSA present.

2. The lessor shall furnish to GSA within two weeks of occupancy, as-built drawings of the completed work that shows the following as a minimum:

   a. All usual building features such as partitions, doors, electrical panels and receptacles, telephone outlets, fire extinguishers, water fountains and plumbing fixtures.

   b. All IWS/LAN component locations and identification markings for the following:

      1) Special electrical panels and receptacles.

      2) All electrical junction boxes where any IWS/LAN circuit components have been combined.

      3) Data cable ends.

      4) Intrusion alarm controls, sensors and related devices, where applicable.

      5) Any unusual features that may exist in addition to those listed above.

3. **SSA has hired an electrical engineering firm to provide construction drawings for the IWS/LAN and systems furniture electrical systems. Following completion of all work associated with the installation of the furniture and equipment, a "Pre-Travel Work Verification Form" (included in the construction documents) will be completed by the electrical and data contractors. This form will alert the electrical engineering firm to arrange for an inspection of the work performed to verify that it meets SSA requirements and complies with the construction drawings provided by the engineering firm.**

8.10.6 DEFINITION OF TERMS SSA OFFICIAL POLICY

Use of the National Electric Code (NEC), Federal Information Processing Standards (FIPS) Publication 94 and SSA Definition of Dedicated Lines, Isolated Ground, Feeders and Branch Circuits, Convenience Receptacle Branch Circuits, and a Description of the Modular Furniture Feeds.

1. NEC & FIPS PUB. 94

The NEC is published by the National Fire Protection Association (NFPA) and is part of most building codes. Compliance with the latest edition of this code is mandatory for electrical installation to safeguard persons and property from hazards arising from the use of electricity. Some local building codes may also have additional requirements. FIPS Publication 94 dated September 21, 1983 and published by the U.S. Department of Commerce/National Bureau of Standards, provides guidelines on electric power for ADP installations. SSA's Division of Realty and Space Management insists upon site installations conforming to both NEC and FIPS 94.

INITIALS: _____ & _____
LESSOR GOV'T

2. Dedicated Line

A dedicated line is a separate branch circuit that runs from an isolated ground (IG) receptacle or series of IG receptacles to the breaker with the same or similar type of equipment plugged into it. A dedicated circuit will not share phase, neutral or ground wires with any other circuits. It does not mean that each electrical device, such as a computer terminal, has its own breaker. This would overtax the quantity of breakers required in each panel board.

Noncompatible devices such as typewriters, coffeepots, printers, controllers, microwave ovens, etc., should not be plugged into the workstation dedicated line. Further, a series of printers should have a separate dedicated line and each Intelligent Workstation/Local Area Network (IWS/LAN) rack should have its own dedicated line. This requirement is to reduce line noise and avoid sudden common voltage drops created by noncompatible devices.

A branch circuit can power six convenience receptacles as limited by the NEC. The code states that the continuous current supplied by a branch circuit shall not exceed 80 percent of the branch circuit rating. This would be 16 amps for a 20-amp circuit breaker.

Each receptacle must be marked with the breaker number to which it is connected. This may assure that noncompatible devices are not connected to the same breaker and dedicated line.

3. Isolated Ground (IG) - For Receptacles

An IG in a branch circuit is a separate, insulated grounding wire that runs from an isolated grounding-type receptacle (usually orange in color) to the panel box. It is connected to a special insulated separate ground strip or bus which is in turn connected by an insulated wire to the main building service ground, avoiding any contact with the conduit, electrical boxes, and neutral bus. This grounding conductor may pass through one or more panel boxes without any connection to the panel box grounding terminal.

The main building service ground is a point at the electrical service entrance where the neutral of the incoming service or neutral of the service transformer is bonded to the service equipment ground. An IG should not run to an isolated earth ground or a water pipe.

This installation shall meet the requirements of FIPS PUB. 94 dated September 21, 1983, "Guidelines on Electric Power for ADP Installation" issued by the Bureau of Standards and the article 250-74 exception No. 4 of NEC.

The integrity of the isolated ground is essential to proper operation of the IWS/LAN equipment. The isolated ground is to be provided in addition to the electrical grounding as required by article 250 of the latest edition of the NEC, which is solely a safety requirement.

4. Feeder and Branch Circuit

A feeder is an electric circuit between the service equipment, such as a distribution board or a switch board, and a panel board.

A branch circuit is an electrical circuit between a breaker in the panel board and receptacles or devices on the floor.

A 4 wire 120 volt branch circuit for IG receptacles will have one phase wire connected to a circuit breaker, one neutral connected to the neutral bus in the panel, and one insulated

INITIALS: _____ & _____
LESSOR GOV'T

ground wire connected to the isolated ground bus in the panel and one equipment ground wire connected to the equipment ground bus. In addition, the conduit and all the non-current carrying metallic parts of the system shall be grounded in accordance with the requirements of the NEC.

5. Convenience Receptacles Branch Circuits

One common neutral wire can be provided for two or three phase circuits provided these circuits are connected to circuit breakers of different phases. Consequently, two circuits connected to the same phase shall be provided with two separate neutral wires.

Therefore, a 4-wire 208 volt branch circuit will have two different phase wires, one neutral wire, and one equipment ground wire.

Similarly, a 5-wire 208 volt branch circuit will have three different phase wires, one neutral wire, and one equipment ground wire.

6. Modular Furniture Feed

A 7-wire 120/208 volt feed for the modular furniture will have one dedicated circuit and two convenience receptacle branch circuits. The dedicated circuit will have one phase wire, one neutral wire, and one IG wire. The two convenience receptacle branch circuits will have two phase wires, one neutral wire, and one safety ground wire. This safety ground wire will serve both the dedicated branch circuit and the convenience branch circuit.

7. IG Receptacle Circuiting Requirement

No more than four IG receptacles for IWS/LAN workstations and image server per circuit.

No more than two IG receptacles for Laser printers and scanning work station per circuit.

Two IG receptacles each on a separate circuit for the IWS/LAN rack.

Digital copiers will be placed on a separate IG circuit.

If additional information is desired or you have questions about this policy, you may contact DRSM's electrical engineer, Mr. Mulchand Lala, 410-965-4948.

8. Provide

The word "provide" signifies that the contractor shall "furnish and install".

9. The latest edition of the NEC shall be used when installing at subject site.

8.10.7 ATTACHMENTS

Reference Attachments 12.1-12.4 for typical receptacle wiring diagrams.

Typical receptacle wiring in system furniture and typical IBM cable installation diagrams are available upon request.

INITIALS: _____ & _____
LESSOR GOV'T

GENERAL SERVICES ADMINISTRATION PUBLIC BUILDINGS SERVICE SUPPLEMENTAL LEASE AGREEMENT	SUPPLEMENTAL AGREEMENT NO. 2	DATE MAY 15 2002
	TO LEASE NO. GS-05B-16837	

ADDRESS OF PREMISES 1720 S. Mitchell St.
Cadillac, Michigan 49604

THIS AGREEMENT, made and entered into this date by and between

whose address is: North Bogey Properties, LLC
c/o Mr. Tom Bowen
456 E 16th Street
Holland, Michigan 39423

05-15-02A07:52 RCVD

hereinafter called the Lessor and the UNITED STATES OF AMERICA, hereinafter called the Government:

WHEREAS, the parties hereto mentioned desire to amend the above Lease. NOW THEREFORE, these parties for the consideration hereinafter mentioned covenant and agree that the said Lease is amended, effective April 1, 2002, as follows:

Supplemental Lease Agreement (SLA) No. 2 is issued to document the actual address, square footage and commencement date of the leased premises.

The measured space contains 3,110 usable square feet. This is larger than the maximum 3,058 usable square feet allowable per SFO GS-05B-16837 section 1.1 of this Lease. The total initial rent will remain the same as stated in the SF-2 as it was based upon maximum allowable 3,058 usable square feet. The measured square footage requires the following changes to the lease:

Paragraph 1 of the Lease is deleted in its entirety and replaced with the following:

1. The Lessor hereby leases to the Government the following described premises:
   3,559 rentable square feet (3,110 BOMA usable square feet) of ground floor office space in a build to suit, single tenant building, along with 13 surface on-site parking spaces, all located on a site at 1720 S. Mitchell St. Cadillac, MI 49604, to be used for such purposes as determined by the General Services Administration.

Paragraph 2 of the Lease is deleted in its entirety and replaced with the following:

2. TO HAVE AND TO HOLD the said premises with their appurtenances for the term beginning on April 1, 2002 through March 31, 2012, subject to termination and renewal rights as may be hereinafter set forth.

is s is page 1 of 2

IN WITNESS WHEREOF, the parties subscribed their names as of the above date.

LESSOR: NORTH BOGEY PROPERTIES, LLC

(b) (6)

BY [redacted] (Owner)

[redacted] (Owner)

UNITE[redacted]VICES ADMINISTRATION

BY [redacted] CONTRACTING OFFICER

(Signature) (Title)

Paragraph 3 of the Lease is deleted in its entirety and replaced with the following:

3. The Government shall pay the Lessor annual rent o(b) (4) [redacted] in arrears. Rent for a lesser period shall be prorated. Rent checks shall be made payable to:

North Bogey Properties, LLC
Attn: Tom Bowen
456 E. 16th Street
Holland, Michigan 49423

As part of the rental consideration, the Lessor shall perform all responsibilities and obligations as defined in this lease which includes the attachments specified in Paragraph 5 below.

Paragraph 10 of the Lease is deleted in its entirety and replaced with the following:

10. The rent is subject to annual operating cost adjustments in accordance with Section 3, Paragraph 3.6 (A through E) of Solicitation for Offers NO. GS-05B-16837 within this lease. It is understood and agreed that for operating cost adjustment purposes, the first year's operation cost will be(b) (4) [redacted] sq. ft. of space.

Paragraph 19 of the Lease is deleted in its entirety and replaced with the following:

19. The Lease Common Area Factor is 1.1445 (3,110 usable square feet multiplied by 1.1445 equals 3,559 rentable square feet of space).

All other terms and conditions of the Lease remain unchanged.

INITIALS: _____ & _____
LESSOR GOV'T

CHANGE ORDER NO. 5
DATED: 3/11/02
LEASE NO. GS-05B-16837

The lease is amended to incorporate the following change. If there is a conflict in the wording, this change order takes precedence. All other provisions of the lease shall remain unchanged.

Signage:

Lessor to furnish and install at no cost to the Government 8" upper and lower case "Social Security Administration" injection molded plastic letters on the front of the building.

Lessor shall furnish and install at the street entry, a double sided, non-lighted sign showing the address number of the building and "Social Security Administration" pursuant to the attached drawing, at a total cost of (b) (4) [redacted] to the Government.

INITIALS: YB & PW
LESSOR GOV'T

GENERAL SERVICES ADMINISTRATION PUBLIC BUILDINGS SERVICE SUPPLEMENTAL LEASE AGREEMENT	SUPPLEMENTAL AGREEMENT NO. 03	DATE JUL 12 2006
	TO LEASE NO. GS-05B-16837	

ADDRESS OF PREMISES

1720 SOUTH MITCHELL STREET
CADILLAC, MI 49601

THIS AGREEMENT, made and entered into this date by and between whose address is

IRENE L. GONZALES
6251 FALLBROOK AVENUE
WOODLAND HILLS, CA 91367

hereinafter called the Lessor, and the UNITED STATES OF AMERICA, hereinafter called the Government:

WHEREAS, the parties hereto desire to amend the above Lease.

NOW THEREFORE, these parties for the consideration hereinafter mentioned covenant and agree that the said Lease is amended, effective March 1, 2006 as follows:

Former Lessor: NORTH BOGEY PROPERTIES, LLC
C/O TOM BOWEN
456 EAST 16TH STREET
HOLLAND, MI 49423

New Lessor & Payee: IRENE L. GONZALES
6251 FALLBROOK AVENUE
WOODLAND HILLS, CA 91367

(b) (4) [redacted]

The Lessor assumes, approves, adopts and agrees to be bound by the terms of the lease.
All other terms and conditions of the lease shall remain in force and effect.

IN WITNESS WHEREOF, the parties subscribed their names as of the above date.

LESSOR (b) (6) [redacted]

BY

IN PRES[redacted]

6/28/06
(Title)

22647 VENTURA BLVD, WOODLAND HILLS, CA. 91364
(Address)

UNITED S[redacted]INISTRATION

BY

Contracting Officer
(Official Title)

GSA DC 68-1176(5PEEM computer generated form:JAN 92)GSA FORM 276 JUL 67/FEB 92

SEE ATTACHED
FOR OFFICIAL
ACKNOWLEDGEMENT

CALIFORNIA ALL-PURPOSE ACKNOWLEDGMENT

State of California

County of LOS ANGELES

On JUNE 28, 2006 before me, KATHERINE E. SEIGEL, NOTARY PUBLIC
Date — Name and Title of Officer (e.g., "Jane Doe, Notary Public")

personally appeared IRENE L. GONZALES
Name(s) of Signer(s)

☐ ~~personally known to me~~

☒ (or proved to me on the basis of satisfactory evidence)

to be the person(~~s~~) whose name(~~s~~) is/~~are~~ subscribed to the within instrument and acknowledged to me that ~~he~~/she/~~they~~ executed the same in ~~his~~/her/~~their~~ authorized capacity(~~ies~~), and that by ~~his~~/her/~~their~~ signature(~~s~~) on the instrument the person(~~s~~), or the entity upon behalf of which the person(~~s~~) acted, executed the instrument.

WITNESS my hand and official seal.

KATHERINE E. SEIGEL
Commission # 1605513
Notary Public - California
Los Angeles County
My Comm. Expires Sep 10, 2009

Place Notary Seal Above

(b) (6) [redacted]
Signature of Notary Public

OPTIONAL

Though the information below is not required by law, it may prove valuable to persons relying on the document and could prevent fraudulent removal and reattachment of this form to another document.

Description of Attached Document

Title or Type of Document: SUPPLEMENTAL LEASE AGREEMENT

Document Date: JUNE 28, 2006 Number of Pages: (1) ONE

Signer(s) Other Than Named Above: NONE

Capacity(ies) Claimed by Signer(s)

Signer's Name: _____
☐ Individual
☐ Corporate Officer — Title(s): _____
☐ Partner — ☐ Limited ☐ General
☐ Attorney in Fact
☐ Trustee
☐ Guardian or Conservator
☐ Other: _____
Signer Is Representing: _____

RIGHT THUMBPRINT OF SIGNER
Top of thumb here

Signer's Name: _____
☐ Individual
☐ Corporate Officer — Title(s): _____
☐ Partner — ☐ Limited ☐ General
☐ Attorney in Fact
☐ Trustee
☐ Guardian or Conservator
☐ Other: _____
Signer Is Representing: _____

RIGHT THUMBPRINT OF SIGNER
Top of thumb here

© 2006 National Notary Association • 9350 De Soto Ave., P.O. Box 2402 • Chatsworth, CA 91313-2402 Item No. 5907 Reorder: Call Toll-Free 1-800-876-6827

GENERAL SERVICES ADMINISTRATION
PUBLIC BUILDINGS SERVICE
SUPPLEMENTAL LEASE AGREEMENT

SUPPLEMENTAL AGREEMENT NO. 4	DATE 1-17-12
TO LEASE NO. GS-05B-16837	

EXTENSION

ADDRESS OF PREMISES

1720 S. Mitchell Street
Cadillac, MI 49601-8533

THIS AGREEMENT, made and entered into this date by and between

Irene L. Gonzales
6251 Fallbrook Avenue
whose address is Woodland Hills, CA 91367

hereinafter called the Lessor, and the UNITED STATES OF AMERICA, hereinafter called the Government:

WHEREAS, the parties hereto desire to amend the above Lease.

NOW THEREFORE, these parties for the consideration hereinafter mentioned covenant and agree that the said Lease is amended, effective April 1, 2012, as follows:

Supplemental Lease Agreement (SLA) No. 4 is issued to extend the subject lease for a period of six(6) months, three (3) months firm, subject to the termination rights set forth below.

Accordingly, Paragraph 2 (SF-2) of the Lease is hereby deleted in its entirety and replaced with the following:

" 2. TO HAVE AND TO HOLD the said premises with their appurtenances for the term beginning on April 1, 2002, through September 30, 2012, subject to termination and renewal rights as may be hereinafter set forth."

Paragraph 4 is hereby added to the Lease as follows:

" 4. The Government may terminate this lease at any time on or after June 30, 2012, by giving at least 30 days notice in writing to the lessor and no rental shall accrue after the effective date of termination. Said notice shall be computed commencing with the day after the date of mailing."

All other terms and conditions of the lease shall remain in force and effect.

IN WITNESS WHEREOF, the parties subscribed their names as of the above date.

LESSOR Irene L. Gonzales

(b) (6)

BY [redacted] Owner
(Title)

IN PRES [redacted] 6251 Fallbrook Ave.
Woodland Hills, CA 91367
(Address)

UNITED [redacted] STRATION

BY [redacted] Contracting Officer
(Official Title)

GENERAL SERVICES ADMINISTRATION
PUBLIC BUILDINGS SERVICE
SUPPLEMENTAL LEASE AGREEMENT

SUPPLEMENTAL AGREEMENT NO. 5	DATE
TO LEASE NO. GS-05B-16837	

EXTENSION

ADDRESS OF PREMISES

1720 S. Mitchell Street
Cadillac, MI 49601-8533

THIS AGREEMENT, made and entered into this date by and between

Irene L. Gonzales
6251 Fallbrook Avenue
whose address is Woodland Hills, CA 91367

hereinafter called the Lessor, and the UNITED STATES OF AMERICA, hereinafter called the Government:

WHEREAS, the parties hereto desire to amend the above Lease.

NOW THEREFORE, these parties for the consideration hereinafter mentioned covenant and agree that the said Lease is amended, effective April 1, 2012, as follows:

Supplemental Lease Agreement (SLA) No. 5 is issued to extend the subject lease for a period of two(2) years, one (1) year firm, subject to the termination rights set forth below.

Accordingly, Paragraph 2 (SF-2) of the Lease is hereby deleted in its entirety and replaced with the following:

" 2. TO HAVE AND TO HOLD the said premises with their appurtenances for the term beginning on April 1, 2002, through March 31, 2014, subject to termination and renewal rights as may be hereinafter set forth."

Paragraph 4 is hereby added to the Lease as follows:

" 4. The Government may terminate this lease at any time on or after March 31, 2013, by giving at least 60 days notice in writing to the lessor and no rental shall accrue after the effective date of termination. Said notice shall be computed commencing with the day after the date of mailing."

All other terms and conditions of the lease shall remain in force and effect.

IN WITNESS WHEREOF, the parties subscribed their names as of the above date.

LESSOR Irene L. Gonzales

(b) (6)

BY [redacted]

IN PRES[redacted]

Owner
(Title)
6251 Fallbrook Ave.
Woodland Hills, CA 91367
(Address)

UNITED S[redacted]ON

BY [redacted]

Contracting Officer
(Official Title)

(Signature) Jerald M. Helland

GENERAL SERVICES ADMINISTRATION
PUBLIC BUILDINGS SERVICE
LEASE AMENDMENT AGREEMENT

LEASE Amendment AGREEMENT NO. 6

DATE 3/12/14

TO LEASE NO. GS-05B-16837

EXTENSION

ADDRESS OF PREMISES

1720 S. Mitchell Street
Cadillac, MI 49601-8533

THIS AGREEMENT, made and entered into this date by and between

Irene L. Gonzales
6251 Fallbrook Avenue
whose address is Woodland Hills, CA 91367

hereinafter called the Lessor, and the UNITED STATES OF AMERICA, hereinafter called the Government:

WHEREAS, the parties hereto desire to amend the above Lease.

NOW THEREFORE, these parties for the consideration hereinafter mentioned covenant and agree that the said Lease is amended, effective April 1, 2014, as follows:

Lease Amendment Agreement (LAA) No. 6 is issued to extend the subject lease for a period of one(1) year, six (1) months firm, subject to the termination rights set forth below.

Accordingly, Paragraph 2 (SF-2) of the Lease is hereby deleted in its entirety and replaced with the following:

" 2. TO HAVE AND TO HOLD the said premises with their appurtenances for the term beginning on April 1, 2002, through March 31, 2015, subject to termination and renewal rights as may be hereinafter set forth."

Paragraph 4 is hereby added to the Lease as follows:

" 4. The Government may terminate this lease at any time on or after September 30, 2014, by giving at least 30 days notice in writing to the lessor and no rental shall accrue after the effective date of termination. Said notice shall be computed commencing with the day after the date of mailing."

All other terms and conditions of the lease shall remain in force and effect.

IN WITNESS WHEREOF, the parties subscribed their names as of the above date.

LESSOR Irene L. Gonzales

(b) (6)

BY [redacted] Owner (Title)

IN PRESEN[redacted]

6111 LOCKHURST DR. WOODLAND HILLS CA 91367 (Address)

UNITED ST[redacted]TRATION

BY [redacted] Contracting Officer

(Signature) Mark Montgomery (Official Title)

GENERAL SERVICES ADMINISTRATION
PUBLIC BUILDINGS SERVICE
LEASE AMENDMENT AGREEMENT

LEASE Amendment AGREEMENT NO. 7

DATE 3/11/15

TO LEASE NO. GS-05B-16837

EXTENSION

ADDRESS OF PREMISES

1720 S. Mitchell Street
Cadillac, MI 49601-8533

THIS AGREEMENT, made and entered into this date by and between

Irene L. Gonzales
6251 Fallbrook Avenue
whose address is Woodland Hills, CA 91367

hereinafter called the Lessor, and the UNITED STATES OF AMERICA, hereinafter called the Government:

WHEREAS, the parties hereto desire to amend the above Lease.

NOW THEREFORE, these parties for the consideration hereinafter mentioned covenant and agree that the said Lease is amended, effective April 1, 2015, as follows:

Lease Amendment Agreement (LAA) No. 7 is issued to extend the subject lease for a period of 18 months, 12 months firm, subject to the termination rights set forth below.

Accordingly, Paragraph 2 (SF-2) of the Lease is hereby deleted in its entirety and replaced with the following:

" 2. TO HAVE AND TO HOLD the said premises with their appurtenances for the term beginning on April 1, 2002, through September 30, 2016, subject to termination and renewal rights as may be hereinafter set forth."

Paragraph 4 is hereby added to the Lease as follows:

" 4. The Government may terminate this lease at any time on or after April 1, 2016, by giving at least 30 days notice in writing to the lessor and no rental shall accrue after the effective date of termination. Said notice shall be computed commencing with the day after the date of mailing."

All other terms and conditions of the lease shall remain in force and effect.

IN WITNESS WHEREOF, the parties subscribed their names as of the above date.

LESSOR Irene L. Gonzales

(b) (6) [redacted] Owner

IN PRESENCE O[redacted] 01 VIRGINA AVE #309 SANTA MONICA CAL 90404
(Address)

UNITED STATES [redacted] RATION

BY [redacted] Contracting Officer
(Signature) Mark Montgomery (Official Title)

GENERAL SERVICES ADMINISTRATION PUBLIC BUILDINGS SERVICE LEASE AMENDMENT	LEASE AMENDMENT No. 8 TO LEASE NO. GS-05B-16837
ADDRESS OF PREMISES 1720 S. Mitchell Street Cadillac, MI 49601-8533	

THIS AGREEMENT, made and entered into this date by and between Irene L. Gonzales, Sole Proprietor

whose address is:

6251 Fallbrook Avenue
Woodland Hills, CA 91367-1602

hereinafter called the Lessor, and the **UNITED STATES OF AMERICA**, hereinafter called the Government:

WHEREAS, the parties hereto desire to amend the above Lease dated May 10, 2001, as amended by SLA 1 dated September 11, 2002, SLA 2 dated May 15, 2002, SLA 3 dated July 12,2006, SLA 4 dated January 17, 2012, SLA 5 dated April 1, 2012, LA 6 dated March 12, 2014, and LA 7 dated March 11, 2015,

NOW THEREFORE, these parties for the considerations hereinafter mentioned covenant and agree that the said Lease is amended, effective October 1, 2016, as follows:

Lease Amendment No. 8 is issued to extend the subject lease for a period of thirty (30) months, one (1) year firm, subject to the termination rights set forth below.

Accordingly, Paragraph 2 (SF-2) of the lease is hereby deleted in its entirety and replaced with the following:

"2. TO HAVE AND TO HOLD the said premises with their appurtenances for the term beginning on April 1, 2002, through March 31, 2019, subject to termination and renewal rights as may be hereinafter set forth."

This Lease Amendment contains 2 pages.

All other terms and conditions of the lease shall remain in force and effect.
IN WITNESS WHEREOF, the parties subscribed their names as of the below date.

FOR THE LESSOR:

(b) (6)

Signature: [redacted]
Name:
Title:
Entity Name:
Date:

FOR THE GOVERNMENT:

[redacted]

WITNESSED

Signature:
Name: CHRISTINE GONZALES-PALMER
Title:
Date: 9-30-2016

Paragraph 4 as referenced in Lease Amendment No. 7 , which was mis-stated to be a replacement of Paragraph 4, but Rather is a supplement to Paragraph 4 of the Lease: is hereby deleted in its entirety and replaced with the following:

"4. The Government may terminate this lease at any time on or after September 30, 2017, by giving at least ninety (90) days' notice in writing to the Lessor. Said notice shall be computed commencing with the day after the date of mailing. This Lease will terminate prior to the effective date of the Lease contained in RLP 5MI0204, if that Lease is awarded to the Lessor, with no notice to the Lessor. No rental shall accrue after the effective date of termination."

Paragraph 23 is hereby added to the lease as follows:

"23. Broker Commission and Commission Credit

A. CBRE, Inc. (Broker) is the authorized real estate Broker representing GSA in connection with this Lease transaction. The total amount of the Commission is $(b) (4) and is earned upon Lease execution, payable according to the Commission Agreement signed between the two parties. Only (b) (4) of the Commission will be payable to CBRE, Inc. with the remaining $(b) (4), which is the Commission Credit, to be credited to the shell rental portion of the annual rental payments due and owing to fully recapture this Commission Credit. The reduction in shell rent shall commence with the first month of the rental payments and continue until the credit has been fully recaptured in equal monthly installments over the shortest time practicable.

B. Notwithstanding Paragraph 3 of this Lease, the shell rental payments due and owing under this Lease shall be reduced to recapture fully this Commission Credit. The reduction in shell rent shall commence with the first month of the rental payments and continue as indicated in this schedule for adjusted Monthly Rent:

Month 1 Rental Payment (b) (4) [redacted] adjusted 1st Month's Rent.*

* Subject to change based on adjustments outlined under the paragraph "Rent and Other Consideration."

INITIALS: LESSOR & GOV'T

GENERAL SERVICES ADMINISTRATION PUBLIC BUILDINGS SERVICE LEASE AMENDMENT	LEASE AMENDMENT No. 9 TO LEASE NO. GS-05P-LMI16837
ADDRESS OF PREMISES 1720 S. Mitchell Street Cadillac, MI 49601-8533	

THIS AGREEMENT, made and entered into this date by and between Irene L. Gonzales, Sole Proprietor

whose address is:

6251 Fallbrook Avenue
Woodland Hills, CA 91367-1602

hereinafter called the Lessor, and the **UNITED STATES OF AMERICA**, hereinafter called the Government:

WHEREAS, the parties hereto desire to amend the above Lease dated May 10, 2001, as amended by SLA 1 dated September 11, 2002, SLA 2 dated May 15, 2002, SLA 3 dated July 12,2006, SLA 4 dated January 17, 2012, SLA 5 dated April 1, 2012, LA 6 dated March 12, 2014, LA 7 dated March 11, 2015, and LA 8 dated October 6, 2016, ,

NOW THEREFORE, these parties for the considerations hereinafter mentioned covenant and agree that the said Lease is amended, effective April 1, 2019, as follows:

Lease Amendment No. 9 is issued to extend the subject lease for a period of twelve (18) months, subject to the termination right set forth below.

1. Paragraph 2 (SF-2) of the lease is hereby deleted in its entirety and replaced with the following:

"2. TO HAVE AND TO HOLD the said premises with their appurtenances for the term beginning on April 1, 2002, through September 30, 2020, subject to termination and renewal rights as hereinafter set forth. On June 20, 2018, the Lessor was awarded a lease under project 5MI0204. This lease shall automatically terminate immediately prior to the effective date of awarded Lease GS-05P-LMI19583, with no Notice required to terminate."

2. Paragraph 4. of this Lease is hereby deleted in its entirety.

This Lease Amendment contains 1 page.

All other terms and conditions of the lease shall remain in force and effect.
IN WITNESS WHEREOF, the parties subscribed their names as of the below date.

FOR THE LESSOR: **FOR THE GOVERNMENT:**

(b) (6)

Signature:
Name:
Title:
Entity Nam
Date:

WITNESSE

Signature:
Name: CHRISTINE GONZALES-PALMER
Title: WITNESS
Date: 3-7-2019

This Lease is made and entered into between

Irene L. Gonzales

(Lessor), whose principal place of business is 6251 Fallbrook Avenue, Woodland Hills, CA 91367-1602, and whose interest in the Property described herein is that of Fee Owner, and

The United States of America

(Government), acting by and through the designated representative of the General Services Administration (GSA), upon the terms and conditions set forth herein.

Witnesseth: The parties hereto, for the consideration hereinafter mentioned, covenant and agree as follows:

Lessor hereby leases to the Government the Premises described herein, being all or a portion of the Property located at

1720 S. Mitchell Drive, Cadillac, MI 49601-8533

and more fully described in Section 1 and Exhibit **A,** together with rights to the use of parking and other areas as set forth herein, to be used for such purposes as determined by GSA.

LEASE TERM

To Have and To Hold the said Premises with its appurtenances for the term beginning upon acceptance of the Premises as required by this Lease and continuing for a period of

Ten (10) Years, Five (5) Years Firm,

subject to termination and renewal rights as may be hereinafter set forth. The commencement date of this Lease, along with any applicable termination and renewal rights, shall be more specifically set forth in a Lease Amendment upon substantial completion and acceptance of the Space by the Government.

In Witness Whereof, the parties to this Lease evidence their agreement to all terms and conditions set forth herein by their signatures below, to be effective as of the date of delivery of the fully executed Lease to the Lessor.

FOR THE LESSOR: **FOR THE GOVERNMENT:**

(b) (6) [redacted]

Name: CHRISTINE G. GONZALES-PALMER

Title:

Date: JUNE 14, 2018

The information collection requirements contained in this Solicitation/Contract, that are not required by the regulation, have been approved by the Office of Management and Budget pursuant to the Paperwork Reduction Act and assigned the OMB Control No. 3090-0163.

CALIFORNIA ALL-PURPOSE ACKNOWLEDGMENT CIVIL CODE § 1189

A notary public or other officer completing this certificate verifies only the identity of the individual who signed the document to which this certificate is attached, and not the truthfulness, accuracy, or validity of that document.

State of California
County of Los Angeles

On 6-14-18 (Date) before me, Mohsen Azaran (Notary Public) (Here Insert Name and Title of the Officer),

personally appeared Irene L. Gonzales & Christine G. Gonzales-Palmer (Name(s) of Signer(s))

who proved to me on the basis of satisfactory evidence to be the person(s) whose name(s) is/are subscribed to the within instrument and acknowledged to me that he/she/they executed the same in his/her/their authorized capacity(ies), and that by his/her/their signature(s) on the instrument the person(s), or the entity upon behalf of which the person(s) acted, executed the instrument.

MOHSEN AZARAN
Commission # 2122580
Notary Public - California
Los Angeles County
My Comm. Expires Aug 8, 2019

I certify under PENALTY OF PERJURY under the laws of the State of California that the foregoing paragraph is true and correct.

WITNESS my hand and official seal.

Signature (b) (6) [redacted]
Signature of Notary Public

Place Notary Seal and/or Stamp Above

OPTIONAL

Completing this information can deter alteration of the document or fraudulent reattachment of this form to an unintended document.

Description of Attached Document

Title or Type of Document: Lease No. 05-05 P-LM 119583

Document Date: 6-14-18 Number of Pages: 1

Signer(s) Other Than Named Above:

Capacity(ies) Claimed by Signer(s)

Signer's Name: see Above	Signer's Name:
☐ Corporate Officer – Title(s):	☐ Corporate Officer – Title(s):
☐ Partner – ☐ Limited ☐ General	☐ Partner – ☐ Limited ☐ General
☒ Individual ☐ Attorney in Fact	☐ Individual ☐ Attorney in Fact
☐ Trustee ☐ Guardian of Conservator	☐ Trustee ☐ Guardian of Conservator
☐ Other:	☐ Other:
Signer is Representing:	Signer is Representing:

©2017 National Notary Association

SECTION 1 THE PREMISES, RENT, AND OTHER TERMS 5
1.01 THE PREMISES (SEP 2015) 5
1.02 EXPRESS APPURTENANT RIGHTS (SEP 2013) 5
1.03 RENT AND OTHER CONSIDERATION (SEP 2015) 5
1.04 BROKER COMMISSION AND COMMISSION CREDIT (SEP 2015) 6
1.05 TERMINATION RIGHTS (AUG 2011) 6
1.06 ~~RENEWAL RIGHTS (SEP 2013)~~ INTENTIONALLY DELETED 6
1.07 DOCUMENTS INCORPORATED IN THE LEASE (SEP 2015) 6
1.08 TENANT IMPROVEMENT RENTAL ADJUSTMENT (SEP 2015) 6
1.09 TENANT IMPROVEMENT FEE SCHEDULE (JUN 2012) 7
1.10 ~~BUILDING SPECIFIC AMORTIZED CAPITAL (SEP 2012)~~ INTENTIONALLY DELETED 7
1.11 ~~BUILDING SPECIFIC AMORTIZED CAPITAL RENTAL ADJUSTMENT (SEP 2013)~~ INTENTIONALLY DELETED 7
1.12 PERCENTAGE OF OCCUPANCY FOR TAX ADJUSTMENT (JUN 2012) 7
1.13 REAL ESTATE TAX BASE (SEP 2013) 7
1.14 OPERATING COST BASE (SEP 2013) 7
1.15 RATE FOR ADJUSTMENT FOR VACANT LEASED PREMISES (SEP 2013) 7
1.16 HOURLY OVERTIME HVAC RATES (AUG 2011) 7
1.17 ~~24-HOUR HVAC REQUIREMENT (SEP 2014)~~ INTENTIONALLY DELETED 7
1.18 BUILDING IMPROVEMENTS (MAR 2016) 7
1.19 ~~HUBZONE SMALL BUSINESS CONCERNS ADDITIONAL PERFORMANCE REQUIREMENTS (MAR 2012)~~ INTENTIONALLY DELETED 8

SECTION 2 GENERAL TERMS, CONDITIONS, AND STANDARDS 9
2.01 DEFINITIONS AND GENERAL TERMS (SEP 2013) 9
2.02 AUTHORIZED REPRESENTATIVES (JUN 2012) 9
2.03 ALTERATIONS REQUESTED BY THE GOVERNMENT (SEP 2013) 10
2.04 WAIVER OF RESTORATION (APR 2011) 10
2.05 PAYMENT OF BROKER (JUL 2011) 10
2.06 CHANGE OF OWNERSHIP (APR 2015) 10
2.07 REAL ESTATE TAX ADJUSTMENT (JUN 2012) 11
2.08 ADJUSTMENT FOR VACANT PREMISES (SEP 2013) 12
2.09 OPERATING COSTS ADJUSTMENT (JUN 2012) 12
2.10 ADDITIONAL POST-AWARD FINANCIAL AND TECHNICAL DELIVERABLES (JUN 2012) 13
2.11 ~~RELOCATION ASSISTANCE ACT (APR 2011)~~ INTENTIONALLY DELETED 13

SECTION 3 CONSTRUCTION STANDARDS AND SHELL COMPONENTS 14
3.01 ~~LABOR STANDARDS (SEP 2013)~~ INTENTIONALLY DELETED 14
3.02 WORK PERFORMANCE (JUN 2012) 14
3.03 RECYCLED CONTENT PRODUCTS (COMPREHENSIVE PROCUREMENT GUIDELINES) (SEP 2013) 14
3.04 ENVIRONMENTALLY PREFERABLE BUILDING PRODUCTS AND MATERIALS (SEP 2013) 14
3.05 EXISTING FIT-OUT, SALVAGED, OR REUSED BUILDING MATERIAL (JUN 2012) 14
3.06 CONSTRUCTION WASTE MANAGEMENT (SEP 2015) 14
3.07 WOOD PRODUCTS (SEP 2013) 15
3.08 ADHESIVES AND SEALANTS (AUG 2008) 15
3.09 BUILDING SHELL REQUIREMENTS (SEP 2013) 16
3.10 RESPONSIBILITY OF THE LESSOR AND LESSOR'S ARCHITECT/ENGINEER (JUN 2012) 16
3.11 QUALITY AND APPEARANCE OF BUILDING (JUN 2012) 16
3.12 VESTIBULES (APR 2011) 16
3.13 MEANS OF EGRESS (MAY 2015) 16
3.14 AUTOMATIC FIRE SPRINKLER SYSTEM (SEP 2013) 17
3.15 FIRE ALARM SYSTEM (SEP 2013) 17
3.16 ENERGY INDEPENDENCE AND SECURITY ACT (MAR 2016) 17
3.17 ELEVATORS (SEP 2013) 18
3.18 ~~BUILDING DIRECTORY (APR 2011)~~ INTENTIONALLY DELETED 18
3.19 ~~FLAGPOLE (SEP 2013)~~ INTENTIONALLY DELETED 18
3.20 DEMOLITION (JUN 2012) 19
3.21 ACCESSIBILITY (FEB 2007) 19
3.22 CEILINGS (APR 2015) 19
3.23 EXTERIOR AND COMMON AREA DOORS AND HARDWARE (SEP 2013) 19
3.24 DOORS: IDENTIFICATION (APR 2011) 19
3.25 WINDOWS (APR 2011) 19
3.26 PARTITIONS: GENERAL (APR 2015) 20
3.27 PARTITIONS: PERMANENT (APR 2015) 20
3.28 INSULATION: THERMAL, ACOUSTIC, AND HVAC (SEP 2013) 20
3.29 WALL FINISHES – SHELL (SEP 2015) 20
3.30 PAINTING – SHELL (JUN 2012) 20
3.31 FLOORS AND FLOOR LOAD (APR 2015) 20
3.32 FLOOR COVERING AND PERIMETERS – SHELL (SEP 2013) 20
3.33 MECHANICAL, ELECTRICAL, PLUMBING: GENERAL (APR 2011) 21

3.34 BUILDING SYSTEMS (APR 2011) ... 21
3.35 ELECTRICAL (JUN 2012) ... 21
3.36 ~~ADDITIONAL ELECTRICAL CONTROLS (JUN 2012)~~ INTENTIONALLY DELETED ... 21
3.37 PLUMBING (JUN 2012) ... 21
3.38 DRINKING FOUNTAINS (APR 2011) ... 21
3.39 RESTROOMS (SEP 2013) ... 21
3.40 PLUMBING FIXTURES: WATER CONSERVATION (DEC 2011) ... 22
3.41 JANITOR CLOSETS (SEP 2015) ... 22
3.42 HEATING, VENTILATION, AND AIR CONDITIONING - SHELL (SEP 2013) ... 22
3.43 TELECOMMUNICATIONS: DISTRIBUTION AND EQUIPMENT (SEP 2015) ... 23
3.44 TELECOMMUNICATIONS: LOCAL EXCHANGE ACCESS (JUN 2012) ... 23
3.45 LIGHTING: INTERIOR AND PARKING - SHELL (SEP 2013) ... 23
3.46 ACOUSTICAL REQUIREMENTS (JUN 2012) ... 24
3.47 ~~SECURITY FOR NEW CONSTRUCTION (NOV 2005)~~ INTENTIONALLY DELETED ... 24
3.48 ~~SEISMIC SAFETY FOR NEW CONSTRUCTION (SEP 2012)~~ INTENTIONALLY DELETED ... 24
3.49 ~~FIRE PROTECTION FOR NEW CONSTRUCTION (APR 2015)~~ INTENTIONALLY DELETED ... 24
3.50 ~~LEADERSHIP IN ENERGY AND ENVIRONMENTAL DESIGN FOR NEW CONSTRUCTION (LEED-NC) (SEP 2013)~~ INTENTIONALLY DELETED ... 24
3.51 ~~LEADERSHIP IN ENERGY AND ENVIRONMENTAL DESIGN FOR COMMERCIAL INTERIORS (LEED-CI) (SEP 2013)~~ INTENTIONALLY DELETED ... 24
3.52 INDOOR AIR QUALITY DURING CONSTRUCTION (SEP 2013) ... 24
3.53 SYSTEMS COMMISSIONING (APR 2011) ... 25
3.54 ~~DUE DILIGENCE AND NATIONAL ENVIRONMENTAL POLICY ACT REQUIREMENTS – LEASE (SEP 2014)~~ INTENTIONALLY DELETED ... 25
3.55 ~~NATIONAL HISTORIC PRESERVATION ACT REQUIREMENTS - LEASE (SEP 2014)~~ INTENTIONALLY DELETED ... 25

SECTION 4 DESIGN, CONSTRUCTION, AND POST AWARD ACTIVITIES ... 26
4.01 SCHEDULE FOR COMPLETION OF SPACE (SEP 2015) ... 26
4.02 CONSTRUCTION DOCUMENTS (SEP 2012) ... 26
4.03 TENANT IMPROVEMENTS PRICE PROPOSAL (SEP 2015) ... 26
4.04 ~~BUILDING SPECIFIC AMORTIZED CAPITAL (BSAC) PRICE PROPOSAL (SEP 2015)~~ INTENTIONALLY DELETED ... 27
4.05 GREEN LEASE SUBMITTALS (SEP 2015) ... 27
4.06 CONSTRUCTION SCHEDULE AND INITIAL CONSTRUCTION MEETING (APR 2011) ... 28
4.07 PROGRESS REPORTS (JUN 2012) ... 28
4.08 CONSTRUCTION INSPECTIONS (SEP 2015) ... 28
4.09 ACCESS BY THE GOVERNMENT PRIOR TO ACCEPTANCE (SEP 2013) ... 28
4.10 ACCEPTANCE OF SPACE AND CERTIFICATE OF OCCUPANCY (SEP 2015) ... 28
4.11 LEASE TERM COMMENCEMENT DATE AND RENT RECONCILIATION (JUN 2012) ... 28
4.12 AS-BUILT DRAWINGS (JUN 2012) ... 28
4.13 LIQUIDATED DAMAGES (JUN 2012) ... 29
4.14 ~~SEISMIC RETROFIT (SEP 2013)~~ INTENTIONALLY DELETED ... 29
4.15 LESSOR'S PROJECT MANAGEMENT FEE (SEP 2013) ... 29

SECTION 5 TENANT IMPROVEMENT COMPONENTS ... 30
5.01 TENANT IMPROVEMENT REQUIREMENTS (SEP 2013) ... 30
5.02 ~~TENANT IMPROVEMENT SPECIFICATIONS (SEP 2015)~~ INTENTIONALLY DELETED ... 30
5.03 FINISH SELECTIONS (SEP 2015) ... 30
5.04 WINDOW COVERINGS (JUN 2012) ... 30
5.05 DOORS: SUITE ENTRY (SEP 2013) ... 30
5.06 DOORS: INTERIOR (SEP 2013) ... 30
5.07 DOORS: HARDWARE (SEP 2013) ... 30
5.08 DOORS: IDENTIFICATION (JUN 2012) ... 30
5.09 PARTITIONS: SUBDIVIDING (SEP 2015) ... 30
5.10 WALL FINISHES (JUN 2012) ... 31
5.11 PAINTING – TI (SEP 2013) ... 31
5.12 FLOOR COVERINGS AND PERIMETERS (APR 2015) ... 31
5.13 HEATING AND AIR CONDITIONING (JUN 2012) ... 32
5.14 ELECTRICAL: DISTRIBUTION (SEP 2015) ... 32
5.15 TELECOMMUNICATIONS: DISTRIBUTION AND EQUIPMENT (JUN 2012) ... 32
5.16 TELECOMMUNICATIONS: LOCAL EXCHANGE ACCESS (AUG 2008) ... 33
5.17 DATA DISTRIBUTION (JUN 2012) ... 33
5.18 ELECTRICAL, TELEPHONE, DATA FOR SYSTEMS FURNITURE (JUN 2012) ... 33
5.19 LIGHTING: INTERIOR AND PARKING – TI (SEP 2015) ... 33

SECTION 6 UTILITIES, SERVICES, AND OBLIGATIONS DURING THE LEASE TERM ... 34
6.01 PROVISION OF SERVICES, ACCESS, AND NORMAL HOURS (JUN 2012) ... 34
6.02 UTILITIES (APR 2011) ... 34
6.03 ~~UTILITIES SEPARATE FROM RENTAL/BUILDING OPERATING PLAN (AUG 2011)~~ INTENTIONALLY DELETED ... 34
6.04 UTILITY CONSUMPTION REPORTING (SEP 2015) ... 34

6.05 HEATING AND AIR CONDITIONING (SEP 2014) ... 34
6.06 OVERTIME HVAC USAGE (JUN 2012) ... 34
6.07 JANITORIAL SERVICES (JUN 2012) ... 35
6.08 SELECTION OF CLEANING PRODUCTS (APR 2015) ... 35
6.09 SELECTION OF PAPER PRODUCTS (APR 2015) ... 35
6.10 SNOW REMOVAL (APR 2011) ... 35
6.11 MAINTENANCE AND TESTING OF SYSTEMS (SEP 2013) ... 36
6.12 MAINTENANCE OF PROVIDED FINISHES (SEP 2013) ... 36
6.13 ASBESTOS ABATEMENT (APR 2011) ... 36
6.14 ONSITE LESSOR MANAGEMENT (APR 2011) ... 36
6.15 IDENTITY VERIFICATION OF PERSONNEL (SEP 2013) ... 36
6.16 SCHEDULE OF PERIODIC SERVICES (JUN 2012) ... 37
6.17 LANDSCAPING (SEP 2015) ... 37
6.18 LANDSCAPE MAINTENANCE (APR 2011) ... 38
6.19 RECYCLING (JUN 2012) ... 38
6.20 RANDOLPH-SHEPPARD COMPLIANCE (SEP 2013) ... 38
6.21 ~~SAFEGUARDING AND DISSEMINATION OF SENSITIVE BUT UNCLASSIFIED (SBU) BUILDING INFORMATION (SEP 2013)~~ INTENTIONALLY DELETED ... 38
6.22 INDOOR AIR QUALITY (SEP 2013) ... 38
6.23 RADON IN AIR (SEP 2013) ... 39
6.24 ~~RADON IN WATER (JUN 2012)~~ INTENTIONALLY DELETED ... 39
6.25 HAZARDOUS MATERIALS (SEP 2013) ... 40
6.26 MOLD (SEP 2013) ... 40
6.27 OCCUPANT EMERGENCY PLANS (SEP 2013) ... 40
6.28 ~~FLAG DISPLAY (SEP 2013)~~ INTENTIONALLY DELETED ... 40

SECTION 7 ADDITIONAL TERMS AND CONDITIONS ... 41
7.01 SECURITY STANDARDS (JUN 2012) ... 41
7.02 MODIFIED PARAGRAPHS ... 41
7.03 CONSTRUCTION DURING NON-WORKING HOURS ... 41

SECTION 1 THE PREMISES, RENT, AND OTHER TERMS

1.01 THE PREMISES (SEP 2015)

The Premises are described as follows:

A. Office and Related Space: **3,500** rentable square feet (RSF), yielding **2,874** ANSI/BOMA Office Area (ABOA) square feet (SF) of office and related Space located on the **first (1st)** floor of the Building, as depicted on the floor plan attached hereto as Exhibit **B**.

B. Common Area Factor: The Common Area Factor (CAF) is established as **21.78** percent. This factor, which represents the conversion from ABOA to rentable square feet, rounded to the nearest whole percentage, shall be used for purposes of rental adjustments in accordance with the Payment Clause of the General Clauses.

C. INTENTIONALLY DELETED

1.02 EXPRESS APPURTENANT RIGHTS (SEP 2013)

The Government shall have the non-exclusive right to the use of Appurtenant Areas, and shall have the right to post Rules and Regulations Governing Conduct on Federal Property, Title 41, CFR, Part 102-74, Subpart C within such areas. The Government will coordinate with Lessor to ensure signage is consistent with Lessor's standards. Appurtenant to the Premises and included in the Lease are rights to use the following:

A. Parking: **zero (0)** parking spaces, reserved for the exclusive use of the Government, of which **zero (0)** shall be structured/inside parking spaces, and **zero (0)** shall be surface/outside parking spaces. In addition, the Lessor shall provide such additional parking spaces as required by the applicable code of the local government entity having jurisdiction over the Property.

B. Antennas, Satellite Dishes, and Related Transmission Devices: (1) Space located on the roof of the Building sufficient in size for the installation and placement of telecommunications equipment, (2) the right to access the roof of the Building, and (3) use of all Building areas (e.g., chases, plenums, etc.) necessary for the use, operation, and maintenance of such telecommunications equipment at all times during the term of this Lease.

1.03 RENT AND OTHER CONSIDERATION (SEP 2015)

A. The Government shall pay the Lessor annual rent, payable in monthly installments in arrears, at the following rates:

	FIRM TERM	NON FIRM TERM
	ANNUAL RENT	ANNUAL RENT
SHELL RENT[1]	$80,896.98	$83,100.00
TENANT IMPROVEMENTS RENT[2]	(b) (4) [redacted]	[redacted]
OPERATING COSTS[3]	[redacted]	[redacted]
BUILDING SPECIFIC AMORTIZED CAPITAL (BSAC)	[redacted]	[redacted]
PARKING[4]	[redacted]	[redacted]
TOTAL ANNUAL RENT	[redacted]	[redacted]

[1]Shell rent calculation:
(Firm Term) **$23.11** per RSF multiplied by **3,500** RSF
(Non Firm Term) **$23.74** per RSF multiplied by **3,500** RSF
[2]Tenant Improvements of (b) (4) [redacted] amortized at a rate of **5.75** percent per annum over **5** years.
[3]Operating Costs rent cal[redacted]er RSF multiplied by **3,500** RSF
[4]Parking costs described under sub-paragraph I below

B. INTENTIONALLY DELETED

C. Rent is subject to adjustment based upon a mutual on-site measurement of the Space upon acceptance, not to exceed **2,874** ABOA SF based upon the methodology outlined under the "Payment" clause of GSA Form 3517.

D. Rent is subject to adjustment based upon the final Tenant Improvement (TI) cost to be amortized in the rental rate, as agreed upon by the parties subsequent to the Lease Award Date.

E. INTENTIONALLY DELETED

F. If the Government occupies the Premises for less than a full calendar month, then rent shall be prorated based on the actual number of days of occupancy for that month.

G. Rent shall be paid to Lessor by electronic funds transfer in accordance with the provisions of the General Clauses. Rent shall be payable to the Payee designated by the Lessor in the System for Award Management (SAM). If the payee is different from the Lessor, both payee and Lessor must be registered and active in SAM.

H. Lessor shall provide to the Government, in exchange for the payment of rental and other specified consideration, the following:

1. The leasehold interest in the Property described in the paragraph entitled "The Premises."

2. All costs, expenses and fees to perform the work required for acceptance of the Premises in accordance with this Lease, including all costs for labor, materials, and equipment, professional fees, contractor fees, attorney fees, permit fees, inspection fees, and similar such fees, and all related expenses.

3. Performance or satisfaction of all other obligations set forth in this Lease; and all services, utilities, and maintenance required for the proper operation of the Property, the Building, and the Premises in accordance with the terms of the Lease, including, but not limited to, all inspections, modifications, repairs, replacements, and improvements required to be made thereto to meet the requirements of this Lease.

I. INTENTIONALLY DELETED

J. INTENTIONALLY DELETED

1.04 BROKER COMMISSION AND COMMISSION CREDIT (SEP 2015)

A. **CBRE, Inc.** (Broker) is the authorized real estate Broker representing GSA in connection with this Lease transaction. The total amount of the Commission is (b) (4) and is earned upon Lease execution, payable according to the Commission Agreement signed between the two parties. Only (b) (4) of the Commission will be payable to **CBRE, Inc.** with the remaining (b) (4) which is the Commission Credit, to be credited to the shell rental portion of the annual rental payments due and owing to fully recapture this Commission Credit. The reduction in shell rent shall commence with the first month of the rental payments and continue until the credit has been fully recaptured in equal monthly installments over the shortest time practicable.

B. Notwithstanding the "Rent and Other Consideration" paragraph of this Lease, the shell rental payments due and owing under this Lease shall be reduced to recapture fully this Commission Credit. The reduction in shell rent shall commence with the first month of the rental payments and continue as indicated in this schedule for adjusted Monthly Rent:

Month **1** Rental Payment (b) (4) minus prorated Commission Credit of (b) (4) adjusted **1st** Month's Rent.*

Month **2** Rental Payment [redacted] minus prorated Commission Credit of [redacted] adjusted **2nd** Month's Rent.*

* Subject to change based on adjustments outlined under the paragraph "Rent and Other Consideration."

1.05 TERMINATION RIGHTS (AUG 2011)

The Government may terminate this Lease, in whole or in part, at any time effective after the Firm Term of this Lease, by providing not less than **ninety (90)** days' prior written notice to the Lessor. The effective date of the termination shall be the day following the expiration of the required notice period or the termination date set forth in the notice, whichever is later. No rental shall accrue after the effective date of termination.

1.06 ~~RENEWAL RIGHTS (SEP 2013)~~ INTENTIONALLY DELETED

1.07 DOCUMENTS INCORPORATED IN THE LEASE (SEP 2015)

The following documents are attached to and made part of the Lease:

DOCUMENT NAME	NO. OF PAGES	EXHIBIT
LEGAL DESCRIPTION	A	1
FLOOR PLAN	B	1
SITE PLAN	C	1
SECURITY REQUIREMENTS	D	5
GSA FORM 3517B GENERAL CLAUSES	E	15
GSA FORM 3518-SAM, ADDENDUM TO SYSTEM FOR AWARD MANAGEMENT (SAM) REPRESENTATIONS AND CERTIFICATIONS (ACQUISITIONS OF LEASEHOLD INTERESTS IN REAL PROPERTY)	F	2

1.08 TENANT IMPROVEMENT RENTAL ADJUSTMENT (SEP 2015)

A. The Tenant Improvement Allowance (TIA) for purposes of this Lease is (b) (4) per ABOA SF. The TIA is the amount that the Lessor shall make available for the Government to be used for TIs. This amount is amortized in the rent over the Firm Term of this Lease at an annual interest rate of **5.75** percent.

B. The Government, at its sole discretion, shall make all decisions as to the use of the TIA. The Government may use all or part of the TIA. The Government may return to the Lessor any unused portion of the TIA in exchange for a decrease in rent according to the agreed-upon amortization rate over the Firm Term.

C. The Government may elect to make lump sum payments for any or all work covered by the TIA. That part of the TIA amortized in the rent shall be reduced accordingly. At any time after occupancy and during the Firm Term of the Lease, the Government, at its sole discretion, may elect to pay lump sum for any part or all of the remaining unpaid amortized balance of the TIA. If the Government elects to make a lump sum payment for the TIA after occupancy, the payment of the TIA by the Government will result in a decrease in the rent according to the amortization rate over the Firm Term of the Lease.

D. If it is anticipated that the Government will spend more than the allowance identified above, the Government may elect to:

1. Reduce the TI requirements;

2. Pay lump sum for the overage upon substantial completion in accordance with the "Acceptance of Space and Certificate of Occupancy" paragraph;

3. Negotiate an increase in the rent.

1.09 TENANT IMPROVEMENT FEE SCHEDULE (JUN 2012)

For pricing TI costs, the following rates shall apply for the initial build-out of the Space.

	INITIAL BUILD-OUT
ARCHITECT/ENGINEER FEES ($ PER ABOA SF OR % OF TI CONSTRUCTION COSTS)	(b) (4) [redacted]
LESSOR'S PROJECT MANAGEMENT FEE (% OF TI CONSTRUCTION COSTS)	**5.0%**

1.10 ~~BUILDING SPECIFIC AMORTIZED CAPITAL (SEP 2012)~~ INTENTIONALLY DELETED

1.11 ~~BUILDING SPECIFIC AMORTIZED CAPITAL RENTAL ADJUSTMENT (SEP 2013)~~ INTENTIONALLY DELETED

1.12 PERCENTAGE OF OCCUPANCY FOR TAX ADJUSTMENT (JUN 2012)

As of the Lease Award Date, the Government's Percentage of Occupancy, as defined in the "Real Estate Tax Adjustment" paragraph of this Lease is **100%** percent. The Percentage of Occupancy is derived by dividing the total Government Space of **3,500** RSF by the total Building space of **3,500** RSF.

1.13 REAL ESTATE TAX BASE (SEP 2013)

The Real Estate Tax Base, as defined in the "Real Estate Tax Adjustment" paragraph of the Lease is (b) (4) [redacted] Tax adjustments shall not occur until the tax year following lease commencement has passed.

1.14 OPERATING COST BASE (SEP 2013)

The parties agree, for the purpose of applying the paragraph titled "Operating Costs Adjustment," that the Lessor's base rate for operating costs shall be (b) (4) [redacted]

1.15 RATE FOR ADJUSTMENT FOR VACANT LEASED PREMISES (SEP 2013)

In accordance with the paragraph entitled "Adjustment for Vacant Premises," if the Government fails to occupy or vacates the entire or any portion of the Premises prior to expiration of the term of the Lease, the operating costs paid by the Government as part of the rent shall be reduced by (b) (4) [redacted] per ABOA SF of Space vacated by the Government.

1.16 HOURLY OVERTIME HVAC RATES (AUG 2011)

The following rates shall apply in the application of the paragraph titled "Overtime HVAC Usage:"

- (b) (4) [redacted] per hour for the entire Space.

1.17 ~~24-HOUR HVAC REQUIREMENT (SEP 2014)~~ INTENTIONALLY DELETED

1.18 BUILDING IMPROVEMENTS (MAR 2016)

Before the Government accepts the Space, the Lessor shall complete the following additional Building improvements:

A. As part of the tenant improvement allowance, Lessor shall repair and/or replace non-functional window blinds. If the windows with internal blinds cannot be repaired, replacement of the window units shall be a Shell cost.

B. Lessor shall replace tiling with ceramic tiling as part of the Building Shell.

C. Lessor shall install canopies on the exterior of the building over the front entry and side entry doors as part of the Building Shell.

D. Lessor shall remove wall coverings on exterior walls and repaint exterior walls to match existing paint colors as part of the tenant improvement allowance.

E. Lessor shall install a separate temperature control for the waiting area as part of the tenant improvement allowance.

F. Lessor shall resurface and restripe the parking lot as part of the Building Shell.

G. Lessor shall repair and/or replace exterior windows to address the accumulation of condensation on the interior side as part of the Building Shell.

H. Lessor shall replace existing T12 fluorescent lamps with T8 as part of the Building Shell.

I. As part of the Building Shell, lessor shall install smart thermostat controls to operate the HVAC system according to occupancy schedules

1.19 ~~HUBZONE SMALL BUSINESS CONCERNS ADDITIONAL PERFORMANCE REQUIREMENTS (MAR 2012)~~ INTENTIONALLY DELETED

SECTION 2 GENERAL TERMS, CONDITIONS, AND STANDARDS

2.01 DEFINITIONS AND GENERAL TERMS (SEP 2013)

Unless otherwise specifically noted, all terms and conditions set forth in this Lease shall be interpreted by reference to the following definitions, standards, and formulas:

A. Appurtenant Areas. Appurtenant Areas are defined as those areas and facilities on the Property that are not located within the Premises, but for which rights are expressly granted under this Lease, or for which rights to use are reasonably necessary or reasonably anticipated with respect to the Government's enjoyment of the Premises and express appurtenant rights.

B. Broker. If GSA awarded this Lease using a contract real estate broker, Broker shall refer to GSA's broker.

C. Building. The building(s) situated on the Property in which the Premises are located shall be referred to as the Building(s).

D. Commission Credit. If GSA awarded this Lease using a Broker, and the Broker agreed to forego a percentage of its commission to which it is entitled in connection with the award of this Lease, the amount of this credit is referred to as the Commission Credit.

E. Common Area Factor (CAF). The Common Area Factor (CAF) is a conversion factor determined by the Building owner and applied by the owner to the ABOA SF to determine the RSF for the leased Space. The CAF is expressed as a percentage of the difference between the amount of rentable SF and ABOA SF, divided by the ABOA SF. For example 11,500 RSF and 10,000 ABOA SF will have a CAF of 15% [(11,500 RSF-10,000 ABOA SF)/10,000 ABOA SF]. For the purposes of this Lease, the CAF shall be determined in accordance with the applicable ANSI/BOMA standard for the type of space to which the CAF shall apply.

F. Contract. Contract and contractor means Lease and Lessor, respectively.

G. Days. All references to "day" or "days" in this Lease shall mean calendar days, unless specified otherwise.

H. FAR/GSAR. All references to the FAR shall be understood to mean the Federal Acquisition Regulation, codified at 48 CFR Chapter 1. All references to the GSAR shall be understood to mean the GSA supplement to the FAR, codified at 48 CFR Chapter 5.

I. Firm Term/Non-Firm Term. The Firm Term is that part of the Lease term that is not subject to termination rights. The Non-Firm Term is that part of the Lease term following the end of the Firm Term.

J. Lease Term Commencement Date. The Lease Term Commencement Date means the date on which the lease term commences.

K. Lease Award Date. The Lease Award Date means the date of execution of the Lease by the LCO and the mailing or otherwise furnishing written notification of the executed Lease to the successful Offeror (and on which the parties' obligations under the Lease begin).

L. Premises. The Premises are defined as the total Office Area or other type of Space, together with all associated common areas, described in Section 1 of this Lease, and delineated by plan in the attached exhibit. Parking and other areas to which the Government has rights under this Lease are not included in the Premises.

M. Property. The Property is defined as the land and Buildings in which the Premises are located, including all Appurtenant Areas (e.g., parking areas) to which the Government is granted rights.

N. Rentable Space or Rentable Square Feet (RSF). Rentable Space is the area for which a tenant is charged rent. It is determined by the Building owner and may vary by city or by building within the same city. The Rentable Space may include a share of Building support/common areas such as elevator lobbies, Building corridors, and floor service areas. Floor service areas typically include restrooms, janitor rooms, telephone closets, electrical closets, and mechanical rooms. The Rentable Space does not include vertical building penetrations and their enclosing walls, such as stairs, elevator shafts, and vertical ducts. Rentable Square Feet is calculated using the following formula for each type of Space (e.g., office, warehouse, etc.) included in the Premises: ABOA SF of Space x (1 + CAF) = RSF.

O. Space. The Space shall refer to that part of the Premises to which the Government has exclusive use, such as Office Area, or other type of Space. Parking areas to which the Government has rights under this Lease are not included in the Space.

P. Office Area. For the purposes of this Lease, Space shall be measured in accordance with the standard (Z65.1-1996) provided by American National Standards Institute/Building Owners and Managers Association (ANSI/BOMA) for Office Area, which means "the area where a tenant normally houses personnel and/or furniture, for which a measurement is to be computed." References to ABOA mean ANSI/BOMA Office Area.

Q. Working Days. Working Days shall mean weekdays, excluding Saturdays and Sundays and Federal holidays.

2.02 AUTHORIZED REPRESENTATIVES (JUN 2012)

The signatories to this Lease shall have full authority to bind their respective principals with regard to all matters relating to this Lease. No other persons shall be understood to have any authority to bind their respective principals, except to the extent that such authority may be explicitly delegated by notice to the other party, or to the extent that such authority is transferred by succession of interest. The Government shall have the right to substitute its Lease Contracting Officer (LCO) by notice, without an express delegation by the prior LCO.

2.03 ALTERATIONS REQUESTED BY THE GOVERNMENT (SEP 2013)

A. The Government may request the Lessor to provide alterations during the term of the Lease. Alterations will be ordered by issuance of a Lease Amendment, GSA Form 300, Order for Supplies or Services, or, when specifically authorized to do so by the LCO, a tenant agency-approved form. The GSAM clause, 552.270-31, Prompt Payment, including its invoice requirements, shall apply to orders for alterations. All orders are subject to the terms and conditions of this Lease and may be placed by the LCO or a warranted contracting officer's representative (COR) in GSA or the tenant agency when specifically authorized to do so by the Lease Contracting Officer, subject to the threshold limitation below.

B. Orders for alterations issued by an authorized COR are limited to no more than $150,000 (LCOs are not subject to this threshold). This threshold will change according to future adjustments of the simplified acquisition threshold (see FAR 2.101). The LCO will provide the Lessor with a list of tenant agency officials authorized to place orders and will specify any limitations on the authority delegated to tenant agency officials. The tenant agency officials are not authorized to deal with the Lessor on any other matters.

C. Payments for alterations ordered by the tenant agency under the authorization described in sub-paragraph B will be made directly by the tenant agency placing the order.

2.04 WAIVER OF RESTORATION (APR 2011)

The Lessor shall have no right to require the Government to restore the Premises upon termination of the Lease, and waives all claims against the Government for waste, damages, or restoration arising from or related to (a) the Government's normal and customary use of the Premises during the term of the Lease (including any extensions thereof), as well as (b) any initial or subsequent alteration to the Premises regardless of whether such alterations are performed by the Lessor or by the Government. At its sole option, the Government may abandon property in the Space following expiration of the Lease, in which case the property will become the property of the Lessor and the Government will be relieved of any liability in connection therewith.

2.05 PAYMENT OF BROKER (JUL 2011)

If GSA awarded the Lease through its Broker, the Lessor shall pay GSA's Broker its portion of the commission one half upon Lease award and the remaining half upon acceptance of the Space. "Its portion of the commission" means the agreed-upon commission to GSA's Broker minus the Commission Credit specified in the Lease or Lease Amendment.

2.06 CHANGE OF OWNERSHIP (APR 2015)

A. If during the term of the Lease, title to the Property is transferred, the Lease is assigned, or the Lessor changes its legal name, the Lessor and its successor shall comply with the requirements of FAR Subpart 42.12. If title is transferred, the Lessor shall notify the Government within five days of the transfer of title.

B. The Government and the Lessor may execute a Change of Name Agreement if the Lessor is changing only its legal name, and the Government's and the Lessor's respective rights and obligations remain unaffected. A sample form is found at FAR 42.1205.

C. If title to the Property is transferred, or the Lease is assigned, the Government, the original Lessor (Transferor), and the new owner or assignee (Transferee) shall execute a Novation Agreement providing for the transfer of Transferor's rights and obligations under the Lease to the Transferee. When executed on behalf of the Government, a Novation Agreement will be made part of the Lease via Lease Amendment.

D. In addition to all documents required by FAR 42.1204, the LCO may request additional information (e.g., copy of the deed, bill of sale, certificate of merger, contract, court decree, articles of incorporation, operation agreement, partnership certificate of good standing, etc.) from the Transferor or Transferee to verify the parties' representations regarding the transfer, and to determine whether the transfer of the Lease is in the Government's interest.

E. If the LCO determines that recognizing the Transferee as the Lessor will not be in the Government's interest, the Transferor shall remain fully liable to the Government for the Transferee's performance of obligations under the Lease, notwithstanding the transfer. Under no condition shall the Government be obligated to release the Transferor of obligations prior to (a) the rent commencement date; and (b) any amounts due and owing to the Government under the Lease have been paid in full or completely set off against the rental payments due under the Lease.

F. As a condition for being recognized as the Lessor and entitlement to receiving rent, the Transferee must register in the System for Award Management (SAM) (See FAR 52.232-33), and complete and sign GSA Form 3518-SAM, Addendum to System for Award Management (SAM) Representations and Certifications (Acquisition of Leasehold Interests in Real Property).

G. If title to the Property is transferred, or the Lease is assigned, rent shall continue to accrue, subject to the Government's rights as provided for in this Lease. However, the Government's obligation to pay rent to the Transferee shall be suspended until the Government has received all information reasonably required by the LCO under sub-paragraph D, the Government has determined that recognizing the Transferee as the Lessor is in the Government's interest (which determination will be prompt and not unreasonably withheld), and the Transferee has met all conditions specified in sub-paragraph F. So long as any delays in effecting the recognition of Transferee as Lessor are not the responsibility of the Government, no interest shall accrue on suspended rent.

2.07 REAL ESTATE TAX ADJUSTMENT (JUN 2012)

A. Purpose: This paragraph provides for adjustment in the rent (tax adjustment) to account for increases or decreases in Real Estate Taxes for the Property after the establishment of the Real Estate Tax Base, as those terms are defined herein. Tax adjustments shall be calculated in accordance with this paragraph.

B. Definitions: The following definitions apply to the use of the terms within this paragraph:

Property is defined as the land and Buildings in which the Premises are located, including all Appurtenant Areas (e.g., parking areas to which the Government is granted rights).

Real Estate Taxes are those taxes that are levied upon the owners of real property by a Taxing Authority (as hereinafter defined) of a state or local Government on an ad valorem basis to raise general revenue for funding the provision of government services. The term excludes, without limitation, special assessments for specific purposes, assessments for business improvement districts, and/or community development assessments.

Taxing Authority is a state, commonwealth, territory, county, city, parish, or political subdivision thereof, authorized by law to levy, assess, and collect Real Estate Taxes.

Tax Year refers to the 12-month period adopted by a Taxing Authority as its fiscal year for assessing Real Estate Taxes on an annual basis.

Tax Abatement is an authorized reduction in the Lessor's liability for Real Estate Taxes below that determined by applying the generally applicable real estate tax rate to the Fully Assessed (as hereinafter defined) valuation of the Property.

Unadjusted Real Estate Taxes are the full amount of Real Estate Taxes that would be assessed for the Property for one full Tax Year without regard to the Lessor's entitlement to any Tax Abatements (except if such Tax Abatement came into effect after the date of award of the Lease), and not including any late charges, interest or penalties. If a Tax Abatement comes into effect after the date of award of the Lease, "unadjusted Real Estate Taxes" are the full amount of Real Estate Taxes assessed for the Property for one full Tax Year, less the amount of such Tax Abatement, and not including any late charges, interest, or penalties.

Real Estate Tax Base is the unadjusted Real Estate Taxes for the first full Tax Year following the commencement of the Lease term. If the Real Estate Taxes for that Tax Year are not based upon a Full Assessment of the Property, then the Real Estate Tax Base shall be the Unadjusted Real Estate Taxes for the Property for the first full Tax Year for which the Real Estate Taxes are based upon a Full Assessment. Such first full Tax Year may be hereinafter referred to as the Tax Base Year. Alternatively, the Real Estate Tax Base may be an amount negotiated by the parties that reflects an agreed upon base for a Fully Assessed value of the Property.

The Property is deemed to be Fully Assessed (and Real Estate Taxes are deemed to be based on a Full Assessment) only when a Taxing Authority has, for the purpose of determining the Lessor's liability for Real Estate Taxes, determined a value for the Property taking into account the value of all improvements contemplated for the Property pursuant to the Lease, and issued to the Lessor a tax bill or other notice of levy wherein the Real Estate Taxes for the full Tax Year are based upon such Full Assessment. At no time prior to the issuance of such a bill or notice shall the Property be deemed Fully Assessed.

Percentage of Occupancy refers to that portion of the Property exclusively occupied or used by the Government pursuant to the Lease. For Buildings, the Percentage of Occupancy is determined by calculating the ratio of the RSF occupied by the Government pursuant to the Lease to the total RSF in the Building or Buildings so occupied, and shall not take into account the Government's ancillary rights including, but not limited to, parking or roof space for antennas (unless facilities for such ancillary rights are separately assessed). This percentage shall be subject to adjustment to take into account increases or decreases for Space leased by the Government or for rentable space on the Property.

C. Adjustment for changes in Real Estate Taxes. After the Property is Fully Assessed, the Government shall pay its share of any increases and shall receive its share of any decreases in the Real Estate Taxes for the Property, such share of increases or decreases to be referred to herein as "tax adjustment." The amount of the tax adjustment shall be determined by multiplying the Government's Percentage of Occupancy by the difference between the current year Unadjusted Real Estate Taxes and the Real Estate Tax Base, less the portion of such difference not paid due to a Tax Abatement (except if a Tax Abatement comes into effect after the date of award of the Lease). If a Tax Abatement comes into effect after the date of award of the Lease, the amount of the tax adjustment shall be determined by multiplying the Government's Percentage of Occupancy by the difference between the current year Unadjusted Real Estate Taxes and the Real Estate Tax Base. The Government shall pay the tax adjustment in a single annual lump sum payment to the Lessor. In the event that this tax adjustment results in a credit owed to the Government, the Government may elect to receive payment in the form of a rental credit or lump sum payment.

If the Property contains more than one separately assessed parcel, then more than one tax adjustment shall be determined based upon the Percentage of Occupancy, Real Estate Tax Base, and Real Estate Taxes for each respective parcel.

After commencement of the Lease term, the Lessor shall provide to the LCO copies of all real estate tax bills for the Property, all documentation of Tax Abatements, credits, or refunds, if any, and all notices which may affect the assessed valuation of the Property, for the Tax Year prior to the commencement of the Lease Term, and all such documentation for every year following. Lessor acknowledges that the LCO shall rely on the completeness and accuracy of these submissions in order to establish the Real Estate Tax Base and to determine tax adjustments. The LCO may memorialize the establishment of the Real Estate Tax Base by issuing a unilateral administrative lease amendment indicating the base year, the amount of the Real Estate Tax Base, and the Government's Percentage of Occupancy.

The Real Estate Tax Base is subject to adjustment when increases or decreases to Real Estate Taxes in any Tax Year are attributable to (a) improvements or renovations to the Property not required by this Lease, or (b) changes in net operating income for the Property not derived from this Lease. If either condition results in a change to the Real Estate Taxes, the LCO may re-establish the Real Estate Tax Base as the Unadjusted Real

Estate Taxes for the Tax Year the Property is reassessed under such condition, less the amount by which the Unadjusted Real Estate Taxes for the Tax Year prior to reassessment exceeds the prior Real Estate Tax Base.

If this Lease includes any options to renew the term of the Lease, or be otherwise extended, the Real Estate Tax Base for determining tax adjustments during the renewal term or extension shall be the last Real Estate Tax Base established during the base term of the Lease.

If any Real Estate Taxes for the Property are retroactively reduced by a Taxing Authority during the term of the Lease, the Government shall be entitled to a proportional share of any tax refunds to which the Lessor is entitled, calculated in accordance with this Paragraph. Lessor acknowledges that it has an affirmative duty to disclose to the Government any decreases in the Real Estate Taxes paid for the Property during the term of the Lease. Lessor shall annually provide to the LCO all relevant tax records for determining whether a tax adjustment is due, irrespective of whether it seeks an adjustment in any Tax Year.

If the Lease terminates before the end of a Tax Year, or if rent has been suspended, payment for the real estate tax increase due because of this section for the Tax Year will be prorated based on the number of days that the Lease and the rent were in effect. Any credit due the Government after the expiration or earlier termination of the Lease shall be made by a lump sum payment to the Government or as a rental credit to any succeeding Lease, as determined in the LCO's sole discretion. Lessor shall remit any lump sum payment to the Government within 15 calendar days of payment or credit by the Taxing Authority to Lessor or Lessor's designee. If the credit due to the Government is not paid by the due date, interest shall accrue on the late payment at the rate established by the Secretary of the Treasury under Section 12 of the Contract Disputes Act of 1978, as amended (41 USC § 611), that is in effect on the day after the due date. The interest penalty shall accrue daily on the amount of the credit and shall be compounded in 30-day increments inclusive from the first day after the due date through the payment date. The Government shall have the right to pursue the outstanding balance of any tax credit using all such collection methods as are available to the United States to collect debts. Such collection rights shall survive the expiration of this Lease.

In order to obtain a tax adjustment, the Lessor shall furnish the LCO with copies of all paid tax receipts, or other similar evidence of payment acceptable to the LCO, and a proper invoice (as described in GSA Form 3517, General Clauses, 552.270-31, Prompt Payment) for the requested tax adjustment, including the calculation thereof. All such documents must be received by the LCO within 60 calendar days after the last date the real estate tax payment is due from the Lessor to the Taxing Authority without payment of penalty or interest. FAILURE TO SUBMIT THE PROPER INVOICE AND EVIDENCE OF PAYMENT WITHIN SUCH TIME FRAME SHALL CONSTITUTE A WAIVER OF THE LESSOR'S RIGHT TO RECEIVE A TAX ADJUSTMENT PURSUANT TO THIS PARAGRAPH FOR THE TAX YEAR AFFECTED.

D. Tax Appeals. If the Government occupies more than 50 percent of the Building by virtue of this and any other Government Lease(s), the Government may, upon reasonable notice, direct the Lessor to initiate a tax appeal, or the Government may elect to contest the assessed valuation on its own behalf or jointly on behalf of Government and the Lessor. If the Government elects to contest the assessed valuation on its own behalf or on behalf of the Government and the Lessor, the Lessor shall cooperate fully with this effort, including, without limitation, furnishing to the Government information necessary to contest the assessed valuation in accordance with the filing requirements of the Taxing Authority, executing documents, providing documentary and testimonial evidence, and verifying the accuracy and completeness of records. If the Lessor initiates an appeal at the direction of the Government, the Government shall have the right to approve the selection of counsel who shall represent the Lessor with regard to such appeal, which approval shall not be unreasonably withheld, conditioned or delayed, and the Lessor shall be entitled to a credit in the amount of its reasonable expenses in pursuing the appeal.

2.08 ADJUSTMENT FOR VACANT PREMISES (SEP 2013)

A. If the Government fails to occupy any portion of the leased Premises or vacates the Premises in whole or in part prior to expiration of the term of the Lease, the rental rate and the base for operating cost adjustments will be reduced.

B. If no rate reduction has been established in this Lease, the rate will be reduced by that portion of the costs per ABOA SF of operating expenses not required to maintain the Space. Said reduction shall occur after the Government gives 30 calendar days' prior notice to the Lessor and shall continue in effect until the Government occupies the vacant Premises or the Lease expires or is terminated.

2.09 OPERATING COSTS ADJUSTMENT (JUN 2012)

A. Beginning with the second year of the Lease and each year thereafter, the Government shall pay annual incremental adjusted rent for changes in costs for cleaning services, supplies, materials, maintenance, trash removal, landscaping, water, sewer charges, heating, electricity, and certain administrative expenses attributable to occupancy.

B. The amount of adjustment will be determined by multiplying the base rate by the annual percent of change in the Cost of Living Index. The percent change will be computed by comparing the index figure published for the month prior to the Lease Term Commencement Date with the index figure published for the month prior which begins each successive 12-month period. For example, a Lease which commences in June of 2005 would use the index published for May of 2005, and that figure would be compared with the index published for May of 2006, May of 2007, and so on, to determine the percent change. The Cost of Living Index will be measured by the Department of Labor revised Consumer Price Index for Urban Wage Earners and Clerical Workers (CPI-W), U.S. city average, all items, (1982 to 1984 = 100) published by the Bureau of Labor Statistics. Payment will be made with the monthly installment of fixed rent. Rental adjustments will be effective on the anniversary date of the Lease; however, payment of the adjusted rental rate will become due on the first workday of the second month following the publication of the Cost of Living Index for the month prior to the commencement of each 12-month period.

C. In the event of any decreases in the Cost of Living Index occurring during the term of the occupancy under the Lease, the rental amount will be reduced accordingly. The amount of such reductions will be determined in the same manner as increases in rent provided under this paragraph.

D. If the Government exercises an option to extend the Lease term at the same rate as that of the original term, the option price will be based on the adjustment during the original term. Annual adjustments will continue.

2.10 ADDITIONAL POST-AWARD FINANCIAL AND TECHNICAL DELIVERABLES (JUN 2012)

A. If the Lessor is a HUBZone small business concern (SBC) that did not waive the price evaluation preference, the Lessor shall provide a certification within 10 days after Lease award to the LCO (or representative designated by the LCO) that the Lessor was an eligible HUBZone SBC on the date of award. If it is determined within 20 days after award that a HUBZone SBC Offeror that has been awarded the Lease was not an eligible HUBZone SBC at the time of award, and the HUBZone SBC Lessor failed to provide the LCO with information regarding a change to its HUBZone eligibility prior to award, then the Lease shall be subject, at the LCO's discretion, to termination, and the Government will be relieved of all obligations to the Lessor in such an event and not be liable to the Lessor for any costs, claims or damages of any nature whatsoever.

B. Within **fifteen (15)** Working Days after Lease award, the Lessor shall provide to the LCO (or representative designated by the LCO) evidence of:

1. A firm commitment of funds in an amount sufficient to perform the work.

2. The names of at least two proposed construction contractors, as well as evidence of the contractors' experience, competency, and performance capabilities with construction similar in scope to that which is required herein.

3. The license or certification to practice in the state where the Building is located from the individual(s) and/or firm(s) providing architectural and engineering design services.

C. The Government shall have the right to withhold approval of design intent drawings (DIDs) until the conditions specified in sub-paragraphs A and B have been satisfied.

D. Within ten (10) calendar days after the LCO issues the Notice To Proceed (NTP) for TI construction, the Lessor shall provide to the LCO evidence of:

1. Award of a construction contract for TIs with a firm completion date. This date must be in accordance with the construction schedule for TIs as described in the "Schedule for Completion of Space" paragraph of this Lease.

2. Issuance of required permits for construction of the TIs.

2.11 ~~RELOCATION ASSISTANCE ACT (APR 2011)~~ INTENTIONALLY DELETED

SECTION 3 CONSTRUCTION STANDARDS AND SHELL COMPONENTS

3.01 ~~LABOR STANDARDS (SEP 2013)~~ INTENTIONALLY DELETED

3.02 WORK PERFORMANCE (JUN 2012)

All work in performance of this Lease shall be done by skilled workers or mechanics and shall be acceptable to the LCO. The LCO may reject the Lessor's workers 1) if such are unlicensed, unskilled, or otherwise incompetent, or 2) if such have demonstrated a history of either untimely or otherwise unacceptable performance in connection with work carried out in conjunction with either this contract or other government or private contracts.

3.03 RECYCLED CONTENT PRODUCTS (COMPREHENSIVE PROCUREMENT GUIDELINES) (SEP 2013)

A. The Lessor shall comply to the extent feasible with the Resource Conservation and Recovery Act (RCRA), Section 6002, 1976. The Lessor shall use recycled content products as indicated in this Lease and as designated by the U.S. Environmental Protection Agency (EPA) in the Comprehensive Procurement Guidelines (CPG), 40 CFR Part 247, and its accompanying Recovered Materials Advisory Notice (RMAN). The CPG lists the designated recycled content products. EPA also provides recommended levels of recycled content for these products. The list of designated products, EPA's recommendations, and lists of manufacturers and suppliers of the products can be found at http://www.epa.gov/cpg.

B. The Lessor, if unable to comply with both the CPG and RMAN lists, shall submit a Request for Waiver for each material to the LCO with the TI pricing submittal. The request for waiver shall be based on the following criteria:

1. The cost of the recommended product is unreasonable.
2. Inadequate competition exists.
3. Items are not available within a reasonable period.
4. Items do not meet Lease performance standards.

3.04 ENVIRONMENTALLY PREFERABLE BUILDING PRODUCTS AND MATERIALS (SEP 2013)

A. The Lessor shall use environmentally preferable products and materials. The Lessor is encouraged to consider the lifecycle analysis of the product in addition to the initial cost.

B. Refer to EPA's environmentally preferable purchasing Web site, www.epa.gov/epp and USDA Bio-Preferred products Web site www.biopreferred.gov. In general, environmentally preferable products and materials do one or more of the following:

1. Contain recycled material, are bio-based, are rapidly renewable (10-year or shorter growth cycle), or have other positive environmental attributes.
2. Minimize the consumption of resources, energy, and water.
3. Prevent the creation of solid waste, air pollution, or water pollution.
4. Promote the use of nontoxic substances and avoid toxic materials or processes.

C. The Lessor is encouraged to use products that are extracted and manufactured regionally.

3.05 EXISTING FIT-OUT, SALVAGED, OR REUSED BUILDING MATERIAL (JUN 2012)

A. Items and materials existing in the Premises, or to be removed from the Premises during the demolition phase, are eligible for reuse in the construction phase of the project. The reuse of items and materials is preferable to recycling them; however, items considered for reuse shall be in re-furbished condition and shall meet the quality standards set forth by the Government in this Lease. In the absence of definitive quality standards, the Lessor is responsible to confirm that the quality of the item(s) in question shall meet or exceed accepted industry or trade standards for first quality commercial grade applications.

B. The Lessor shall submit a reuse plan to the LCO. The Government will not pay for existing fixtures and other TIs accepted in place. However, the Government will reimburse the Lessor, as part of the TIA, the costs to repair or improve such fixtures or improvements identified on the reuse plan and approved by the LCO.

3.06 CONSTRUCTION WASTE MANAGEMENT (SEP 2015)

A. Recycling construction waste is mandatory for initial space alterations for TIs and subsequent alterations under the Lease.

B. Recycling construction waste means providing all services necessary to furnish construction materials or wastes to organizations which will employ these materials or wastes in the production of new materials. Recycling includes required labor and equipment necessary to separate individual materials from the assemblies of which they form a part.

C. SUBMITTAL REQUIREMENT: Prior to construction commencement, a proposed plan following industry standards to recycle construction waste. The construction waste management plan shall quantify material diversion goals and maximize the materials to be recycled and/or salvaged (at least 50 percent) from construction, demolition, and packaging debris. Where the small quantity of material, the extraordinarily complex nature of the waste disposal method, or prohibitive expense for recycling would represent a genuine hardship, the Government, upon written request of the Lessor and approval of the LCO, may permit alternative means of disposal.

D. The Lessor shall recycle the following items during both the demolition and construction phases of the project, subject to economic evaluation and feasibility:

1. Ceiling grid and tile
2. Light fixtures, including proper disposal of any transformers, ballasts, and fluorescent light bulbs
3. Duct work and HVAC equipment
4. Wiring and electrical equipment
5. Aluminum and/or steel doors and frames
6. Hardware
7. Drywall
8. Steel studs
9. Carpet, carpet backing, and carpet padding
10. Wood
11. Insulation
12. Cardboard packaging
13. Pallets
14. Windows and glazing materials
15. All miscellaneous metals (as in steel support frames for filing equipment)
16. All other finish and construction materials.

E. If any waste materials encountered during the demolition or construction phase are found to contain lead, asbestos, polychlorinated biphenyls (PCBs) (such as fluorescent lamp ballasts), or other harmful substances, they shall be handled and removed in accordance with Federal and state laws and requirements concerning hazardous waste.

F. In addition to providing "one time" removal and recycling of large scale demolition items such as carpeting or drywall, the Lessor shall provide continuous facilities for the recycling of incidental construction waste during the initial construction.

G. Construction materials recycling records shall be maintained by the Lessor and shall be accessible to the LCO. Records shall include materials recycled or land-filled, quantity, date, and identification of hazardous wastes.

3.07 WOOD PRODUCTS (SEP 2013)

A. For all new installations of wood products, the Lessor is encouraged to use independently certified forest products. For information on certification and certified wood products, refer to the Forest Certification Resource Center (www.certifiedwood.org), the Forest Stewardship Council United States (www.fscus.org), or the Sustainable Forestry Initiative (www.sfiprograms.org).

B. New installations of wood products used under this contract shall not contain wood from endangered wood species, as listed by the Convention on International Trade in Endangered Species. The list of species can be found at WWW.CITES.ORG/ENG/RESOURCES/SPECIES.HTML.

C. Particle board, strawboard, and plywood materials shall comply with Department of Housing and Urban Development (HUD) standards for formaldehyde emission controls. Plywood materials shall not emit formaldehyde in excess of 0.2 parts per million (ppm), and particleboard materials shall not emit formaldehyde in excess of 0.3 ppm.

D. All materials comprised of combustible substances, such as wood plywood and wood boards, shall be treated with fire retardant chemicals by a pressure impregnation process or other methods that treats the materials throughout as opposed to surface treatment.

3.08 ADHESIVES AND SEALANTS (AUG 2008)

All adhesives employed on this project (including, but not limited to, adhesives for carpet, carpet tile, plastic laminate, wall coverings, adhesives for wood, or sealants) shall be those with the lowest possible volatile organic compounds (VOC) content below 20 grams per liter and which meet the

requirements of the manufacturer of the products adhered or involved. The Lessor shall use adhesives and sealants with no formaldehyde or heavy metals. Adhesives and other materials used for the installation of carpets shall be limited to those having a flash point of 140 degrees F or higher. Lessor shall provide Material Safety Data Sheets for all adhesives and sealants employed on this project.

3.09 BUILDING SHELL REQUIREMENTS (SEP 2013)

A. The Building Shell shall be designed, constructed, and maintained in accordance with the standards set forth herein and completed prior to acceptance of Space. For pricing, fulfillment of all requirements not specifically designated as TIs, Building Specific Amortized Capital, Operating Costs, or other rent components as indicated shall be deemed included in the Shell Rent.

B. Base structure and Building enclosure components shall be complete. All common areas accessible by the Government, such as lobbies, fire egress corridors and stairwells, elevators, garages, and service areas, shall be complete. Restrooms shall be complete and operational. All newly installed Building shell components, including but not limited to, heating, ventilation, and air conditioning (HVAC), electrical, ceilings, sprinklers, etc., shall be furnished, installed, and coordinated with TIs. Circulation corridors are provided as part of the base Building only on multi-tenanted floors where the corridor is common to more than one tenant. On single tenant floors, only the fire egress corridor(s) necessary to meet code is provided as part of the shell.

3.10 RESPONSIBILITY OF THE LESSOR AND LESSOR'S ARCHITECT/ENGINEER (JUN 2012)

A. The Lessor shall be responsible for the professional quality, technical accuracy, and the coordination of all designs, drawings, specifications, and other services furnished by the Lessor under this contract. The Lessor shall, without additional compensation, correct or revise any errors or deficiencies in its designs, drawings, specifications, or other services.

B. THE LESSOR REMAINS SOLELY RESPONSIBLE FOR DESIGNING, CONSTRUCTING, OPERATING, AND MAINTAINING THE LEASED PREMISES IN FULL ACCORDANCE WITH THE REQUIREMENTS OF THE LEASE. The Government retains the right to review and approve many aspects of the Lessor's design, including without limitation, review of the Lessor's design and construction drawings, shop drawings, product data, finish samples, and completed base building and TI construction. Such review and approval is intended to identify potential design flaws, to minimize costly misdirection of effort, and to assist the Lessor in its effort to monitor whether such design and construction comply with applicable laws and satisfy all Lease requirements.

C. Neither the Government's review, approval or acceptance of, nor payment through rent of the services required under this contract, shall be construed to operate as a waiver of any rights under this contract or of any cause of action arising out of the performance of this contract, and the Lessor shall be and remain liable to the Government in accordance with applicable law for all damages to the Government caused by the Lessor's negligent performance of any of the services required under this Lease.

D. Design and construction and performance information is contained throughout several of the documents which comprise this Lease. The Lessor shall provide to space planners, architects, engineers, construction contractors, etc., all information required whether it is found in this Lease, special requirements and attachments, price lists, or design intent drawings. Reliance upon one of these documents to the exclusion of any other may result in an incomplete understanding of the scope of the work to be performed and/or services to be provided.

3.11 QUALITY AND APPEARANCE OF BUILDING (JUN 2012)

The Building in which the Premises are located shall be designed, built and maintained in good condition and in accordance with the Lease requirements. If not new or recent construction, the Building shall have undergone by occupancy, modernization, or adaptive reuse for office space with modern conveniences. The Building shall be compatible with its surroundings. Overall, the Building shall project a professional and aesthetically pleasing appearance including an attractive front and entrance way.

3.12 VESTIBULES (APR 2011)

A. Vestibules shall be provided at public and employee entrances and exits wherever weather conditions and heat loss are important factors for consideration. In the event of negative air pressure conditions, provisions shall be made for equalizing air pressure.

B. The Lessor shall provide permanent entryway systems (such as grilles or grates) to control dirt and particulates from entering the Building at all primary exterior entryways.

3.13 MEANS OF EGRESS (MAY 2015)

A. Prior to occupancy, the Premises and any parking garage areas shall meet or will be upgraded to meet, either the applicable egress requirements in the National Fire Protection Association, Life Safety Code (NFPA 101), or the International Code Council, International Building Code (IBC), each current as of the Lease Award Date, or use an alternative approach or method that achieves an equivalent level of safety deemed acceptable by the Government.

B. The Space shall have unrestricted access to a minimum of two remote exits on each floor of Government occupancy.

C. Interlocking or scissor stairs located on the floor(s) where Space is located shall only count as one exit stair.

D. A fire escape located on the floor(s) where Space is located shall not be counted as an approved exit stair.

E. Doors shall not be locked in the direction of egress unless equipped with special locking hardware in accordance with requirements of NFPA 101 or the IBC.

3.14 AUTOMATIC FIRE SPRINKLER SYSTEM (SEP 2013)

A. Any portion of the Space located below-grade, including parking garage areas, and all areas in a Building referred to as "hazardous areas" (defined in National Fire Protection Association (NFPA) 101) that are located within the entire Building (including non-Government areas) shall be protected by an automatic fire sprinkler system or an equivalent level of safety.

B. For Buildings in which any portion of the Space is on or above the sixth floor, then, at a minimum, the Building up to and including the highest floor of Government occupancy shall be protected by an automatic fire sprinkler system or an equivalent level of safety.

C. For Buildings in which any portion of the Space is on or above the sixth floor, and lease of the Space will result, either individually or in combination with other Government Leases in the Building, in the Government leasing 35,000 or more ANSI/BOMA Office Area SF of Space in the Building, then the entire Building shall be protected throughout by an automatic fire sprinkler system or an equivalent level of safety.

D. Automatic fire sprinkler system(s) shall be installed in accordance with the requirements of NFPA 13, Standard for the Installation of Sprinkler Systems that was in effect on the actual date of installation.

E. Automatic fire sprinkler system(s) shall be maintained in accordance with the requirements of NFPA 25, Standard for the Inspection, Testing, and Maintenance of Water-based Fire Protection Systems (current as of the Lease Award Date).

F. "Equivalent level of safety" means an alternative design or system (which may include automatic fire sprinkler systems), based upon fire protection engineering analysis, which achieves a level of safety equal to or greater than that provided by automatic fire sprinkler systems.

3.15 FIRE ALARM SYSTEM (SEP 2013)

A. A Building-wide fire alarm system shall be installed in the entire Building in which any portion of the Space is located on the 3rd floor or higher.

B. The fire alarm system shall be installed in accordance with the requirements of NFPA 72, National Fire Alarm and Signaling Code, that was in effect on the actual date of installation.

C. The fire alarm system shall be maintained in accordance with the requirements of NFPA 72, National Fire Alarm and Signaling Code (current as of the Lease Award Date).

D. The fire alarm system shall transmit all fire alarm signals to the local fire department via any of the following means: directly to the local fire department, to the (911) public communications center, to a central station, to a remote supervising station, or to a proprietary supervising station.

E. If the Building's fire alarm control unit is over 25 years old as of the date of award of this Lease, Lessor shall install a new fire alarm system in accordance with the requirements of NFPA 72, National Fire Alarm and Signaling Code (current as of the Lease Award Date), prior to Government acceptance and occupancy of the Space.

3.16 ENERGY INDEPENDENCE AND SECURITY ACT (MAR 2016)

A. Energy-related Requirements:

1. The Energy Independence and Security Act (EISA) establishes the following requirements for Government Leases in Buildings that have not earned the ENERGY STAR® Label conferred by the Environmental Protection Agency (EPA) within one year prior to the due date for final proposal revisions ("most recent year").

2. If this Lease was awarded under any of EISA's Section 435 statutory exceptions, the Lessor shall either:

a. Earn the ENERGY STAR® Label prior to acceptance of the Space (or not later than one year after the Lease Award Date of a succeeding or superseding Lease); or

b. (i) Complete energy efficiency and conservation improvements if any, agreed to by Lessor in lieu of earning the ENERGY STAR® Label prior to acceptance of the Space (or not later than one year after the Lease Award Date of a succeeding or superseding Lease); and

(ii) Obtain and publicly disclose the Building's current ENERGY STAR® score (using EPA's Portfolio Manager tool), unless the Lessor cannot access whole building utility consumption data, or there is no building category within Portfolio Manager to benchmark against, including spaces—

I. That are located in States with privacy laws that provide that utilities shall not provide such aggregated information to multitenant building owners; and

II. For which tenants do not provide energy consumption information to the commercial building owner in response to a request from the building owner. (A Federal agency that is a tenant of the space shall provide to the building owner, or authorize the owner to obtain from the utility, the energy consumption information of the space for the benchmarking and disclosure required by this subparagraph D).

III. That cannot be benchmarked (scored) using EPA's Portfolio Manager tool because of excessive vacancy; in which case Lessor agrees to obtain the score and publicly disclose it within 120 days of the eligibility to obtain a score using the EPA Portfolio Manager tool.

Note: "public disclosure" means posting the Energy Star® score on state or local websites in those areas that have applicable disclosure mandates, and reporting the score to the Government via Portfolio Manager. In the absence of an applicable state or local disclosure mandate, Lessor shall either generate and display the Energy Star® score in a public space at the building location or post the score on Lessor's or Lessor's Parent/Affiliate website.

3. If this Lease was awarded to a Building to be built or to a Building predominantly vacant as of the due date for final proposal revisions and was unable to earn the ENERGY STAR® label for the most recent year (as defined above) due to insufficient occupancy, but was able to demonstrate sufficient evidence of capability to earn the ENERGY STAR® label, then Lessor must earn the ENERGY STAR® label within 18 months after occupancy by the Government.

4. The Lessor is encouraged to purchase at least 50 percent of the Government tenant's electricity from renewable sources.

B. Hydrology-related Requirements:

1. Per EISA Section 438, the sponsor of any development or redevelopment project involving a Federal facility with a footprint that exceeds 5,000 square feet shall use site planning, design, construction, and maintenance strategies for the property to maintain or restore, to the maximum extent technically feasible, the predevelopment hydrology of the Property with regard to the temperature, rate, volume, and duration of flow. If the Lessor proposes to satisfy the Government's space requirements through a development or redevelopment project, and the Government will be the sole or predominant tenant such that any other use of the Property will be functionally or quantitatively incidental to the Government's use, the Lessor is required to implement hydrology maintenance and restoration requirements as required by EISA Section 438.

a. For the purposes of applying EISA Section 438 in this lease, "sponsor" shall mean "Lessor", and "exceeds 5,000 square feet" shall mean construction that disturbs 5,000 square feet or more of land area at the Property or on adjoining property to accommodate the Government's requirements, or at the Property for whatever reason. Information regarding implementation of the hydrology maintenance and restoration requirements can be found at: http://www.epa.gov/greeningepa/technical-guidance-implementing-stormwater-runoff-requirements-federal-projects

b. Lessor is required to implement these hydrology maintenance and restoration requirements to the maximum extent technically feasible, prior to acceptance of the Space, (or not later than one year after the Lease Award Date or Lease Term Commencement Date, whichever is later, of a succeeding or superseding Lease). Additionally, this Lease requires EISA Section 438 storm water compliance not later than one year from the date of any applicable disturbance (as defined in EISA Section 438) of more than 5,000 square feet of ground area if such disturbance occurs during the term of the Lease if the Government is the sole or predominant tenant. In the event the Lessor is required to comply with EISA Section 438, Lessor shall furnish the Government, prior to the filing for permits for the associated work, with a certification from Lessor's engineer that the design meets the hydrology maintenance and restoration requirements of EISA Section 438.

3.17 ELEVATORS (SEP 2013)

A. The Lessor shall provide suitable passenger and, when required by the Government, freight elevator service to any of the Premises not having ground level access. Service shall be available during the normal hours of operation specified in the in this Lease. However, one passenger and, when required by the Government, one freight elevator shall be available at all times for Government use. When a freight elevator is required by the Government, it shall be accessible to the loading areas. When possible, the Government shall be given 24-hour advance notice if the service is to be interrupted for more than 1-1/2 hours. Normal service interruption shall be scheduled outside of the Government's normal working hours. The Lessor shall also use best efforts to minimize the frequency and duration of unscheduled interruptions.

B. Code: Elevators shall conform to the current requirements of the American Society of Mechanical Engineers ASME A17.1/CSA B44, Safety Code for Elevators and Escalators (current as of the Lease Award Date). Elevators shall be provided with Phase I emergency recall operation and Phase II emergency in-car operation in accordance with ASME A17.1/CSA B44. Fire alarm initiating devices (e.g., smoke detectors) used to initiate Phase I emergency recall operation shall be installed in accordance with the requirements of NFPA 72, National Fire Alarm and Signaling Code. The elevators shall be inspected and maintained in accordance with the current edition of the ASME A17.2, Inspector's Manual for Elevators. Except for the reference to ASME A17.1 in ABAAS, Section F105.2.2, all elevators must meet ABAAS requirements for accessibility in Sections 407, 408, and 409 of ABAAS.

C. Safety Systems: Elevators shall be equipped with telephones or other two-way emergency communication systems. The system used shall be marked and shall reach an emergency communication location staffed 24 hours per day, 7 days per week.

D. Speed: The passenger elevators shall have a capacity to transport in 5 minutes 15 percent of the normal population of all upper floors (based on 150 SF per person). Further, the dispatch interval between elevators during the up-peak demand period shall not exceed 35 seconds.

E. Interior Finishes: Elevator cab walls shall be hardwood, marble, granite, or an equivalent pre-approved by the LCO. Elevator cab floors shall be marble, granite, terrazzo, or an equivalent pre-approved by the LCO.

3.18 ~~BUILDING DIRECTORY (APR 2011)~~ INTENTIONALLY DELETED

3.19 ~~FLAGPOLE (SEP 2013)~~ INTENTIONALLY DELETED

3.20 DEMOLITION (JUN 2012)

The Lessor shall remove existing abandoned electric, telephone, and data cabling and devices, as well as any other improvements or fixtures in place to accommodate the Government's requirements. Any demolition of existing improvements that is necessary to satisfy the Government's layout shall be done at the Lessor's expense.

3.21 ACCESSIBILITY (FEB 2007)

The Building, leased Space, and areas serving the leased Space shall be accessible to persons with disabilities in accordance with the Architectural Barriers Act Accessibility Standard (ABAAS), Appendices C and D to 36 CFR Part 1191 (ABA Chapters 1 and 2, and Chapters 3 through 10). To the extent the standard referenced in the preceding sentence conflicts with local accessibility requirements, the more stringent shall apply.

3.22 CEILINGS (APR 2015)

A complete acoustical ceiling system (which includes grid and lay-in tiles or other Building standard ceiling system as approved by the LCO) throughout the Space and Premises shall be required. The acoustical ceiling system shall be furnished, installed, and coordinated with TIs.

A. Ceilings shall be at a minimum 9 feet and 0 inches and no more than 12 feet and 0 inches measured from floor to the lowest obstruction. Areas with raised flooring shall maintain these ceiling-height limitations above the finished raised flooring. Bulkheads and hanging or surface mounted light fixtures which impede traffic ways shall be avoided. Ceilings shall be uniform in color and appearance throughout the Space, with no obvious damage to tiles or grid.

B. Prior to closing the ceiling, the Lessor shall coordinate with the Government for the installation of any items above the ceiling.

C. Should the ceiling be installed in the Space prior to construction of the TIs, then the Lessor shall be responsible for all costs in regard to the disassembly, storage during construction, and subsequent re-assembly of any of the ceiling components which may be required to complete the TIs. The Lessor shall also bear the risk for any damage to the ceiling or any components thereof during the construction of the TIs.

D. Ceilings shall be a flat plane in each room and shall be suspended and finished as follows unless an alternate equivalent is pre-approved by the LCO:

1. Restrooms. Plastered or spackled and taped gypsum board.

2. Offices and conference rooms. Mineral and acoustical tile or lay in panels with textured or patterned surface and tegular edges or an equivalent pre-approved by the LCO. Tiles or panels shall contain a minimum of 30% recycled content.

3. Corridors and eating/galley areas. Plastered or spackled and taped gypsum board or mineral acoustical tile.

E. INTENTIONALLY DELETED

3.23 EXTERIOR AND COMMON AREA DOORS AND HARDWARE (SEP 2013)

A. Exterior Building doors and doors necessary to the lobbies, common areas, and core areas shall be required. This does not include suite entry or interior doors specific to TIs.

B. Exterior doors shall be weather tight and shall open outward. Hinges, pivots, and pins shall be installed in a manner which prevents removal when the door is closed and locked. These doors shall have a minimum clear opening of 32" clear wide x 80" high (per leaf). Doors shall be heavy duty, flush, (1) hollow steel construction, (2) solid core wood, or (3) insulated tempered glass. As a minimum requirement, hollow steel doors shall be fully insulated, flush, #16-gauge hollow steel. Solid-core wood doors and hollow steel doors shall be at least 1-3/4 inches thick. Door assemblies shall be of durable finish and shall have an aesthetically pleasing appearance acceptable to the LCO. The opening dimensions and operations shall conform to the governing building, fire safety, accessibility, and energy codes and/or requirements. Fire door assemblies shall be listed and labeled. Labels on fire door assemblies shall be maintained in a legible condition. Fire door assemblies and their accompanying hardware, including frames and closing devices shall be installed in accordance with the requirements of NFPA 80, Standard for Fire Doors and Other Opening Protectives.

C. Exterior doors and all common area doors shall have door handles or door pulls with heavyweight hinges. All doors shall have corresponding doorstops (wall or floor mounted) and silencers. All public use doors and restroom doors shall be equipped with kick plates. All doors shall have automatic door closers. All Building exterior doors shall have locking devices installed to reasonably deter unauthorized entry.

3.24 DOORS: IDENTIFICATION (APR 2011)

All signage required in common areas unrelated to tenant identification shall be provided and installed by the Lessor.

3.25 WINDOWS (APR 2011)

A. Office Space shall have windows in each exterior bay unless waived by the LCO.

B. All windows shall be weather tight. Operable windows that open shall be equipped with locks. Off-street, ground-level windows and those accessible from fire escapes, adjacent roofs, and other structures that can be opened must be fitted with a sturdy locking device. Windows accessible from fire escapes must be readily operable from the inside of the Building.

3.26 PARTITIONS: GENERAL (APR 2015)

Partitions in public areas shall be marble, granite, hardwood, or drywall covered with high performance coating, or equivalent pre-approved by the LCO. Newly installed gypsum board material must be Greenguard Gold Certified or have 0 grams per liter of VOCs.

3.27 PARTITIONS: PERMANENT (APR 2015)

Permanent partitions shall extend from the structural floor slab to the structural ceiling slab. They shall be provided by the Lessor as part of shell rent as necessary to surround the Space, stairs, corridors, elevator shafts, restrooms, all columns, and janitor closets. They shall have a flame spread rating of 25 or less and a smoke development rating of 450 or less (ASTM E-84). Stairs, elevators, and other floor openings shall be enclosed by partitions and shall have the fire resistance required by the applicable building code, fire code and ordinances adopted by the jurisdiction in which the Building is located (such as the International Building Code, etc.) current as of the Lease Award Date. Newly installed gypsum board material must be Greenguard Gold Certified or have 0 grams per liter of VOCs.

3.28 INSULATION: THERMAL, ACOUSTIC, AND HVAC (SEP 2013)

A. All insulation products shall contain recovered materials as required by EPA's CPG and related recycled content recommendations.

B. No insulation installed with this project shall be material manufactured using chlorofluorocarbons (CFCs), nor shall CFCs be used in the installation of the product.

C. All insulation containing fibrous materials exposed to air flow shall be rated for that exposure or shall be encapsulated.

D. Insulating properties for all materials shall meet or exceed applicable industry standards. Polystyrene products shall meet American Society for Testing and Materials (ASTM) C578 91.

E. All insulation shall be low emitting with not greater than .05 ppm formaldehyde emissions.

F. The maximum flame spread and smoke developed index for insulation shall meet the requirements of the applicable local codes and ordinances (current as of the Lease Award Date) adopted by the jurisdiction in which the Building is located.

3.29 WALL FINISHES – SHELL (SEP 2015)

A. All restrooms within the Building common areas of Government-occupied floors shall have 1) ceramic tile, recycled glass tile, or comparable wainscot from the finished floor to a minimum height of 4'-6" and 2) semigloss paint on remaining wall areas, or other finish approved by the Government.

B. All elevator areas that access the Space and hallways accessing the Space shall be covered with high performance paint, or an equivalent.

3.30 PAINTING – SHELL (JUN 2012)

A. The Lessor shall bear the expense for all painting associated with the Building shell. These areas shall include all common areas. Exterior perimeter walls and interior core walls within the Space shall be spackled and prime painted with low VOC primer. If any Building shell areas are already painted prior to TIs, then the Lessor shall repaint, at the Lessor's expense, as necessary during TIs.

B. The costs for cyclical painting requirements as outlined in Section 6 shall be included in the shell rent.

3.31 FLOORS AND FLOOR LOAD (APR 2015)

A. All adjoining floor areas shall be of a common level not varying more than 1/4 inch over a 10-foot horizontal run in accordance with the American Concrete Institute standards, non-slip, and acceptable to the LCO.

B. Under-floor surfaces shall be smooth and level. Office areas shall have a minimum live load capacity of 50 pounds per ABOA SF plus 20 pounds per ABOA SF for moveable partitions. Storage areas shall have a minimum live load capacity of 100 pounds per ABOA SF, including moveable partitions. Lessor may be required to provide a report by a registered structural engineer showing the floor load capacity, at the Lessor's expense. Calculations and structural drawings may also be required.

C. INTENTIONALLY DELETED

3.32 FLOOR COVERING AND PERIMETERS – SHELL (SEP 2013)

A. Exposed interior floors in primary entrances and lobbies shall be marble, granite, or terrazzo. Exposed interior floors in secondary entrances, elevator lobbies, and primary interior corridors shall be high-grade carpet, marble, granite, or terrazzo. Resilient flooring shall be used in telecommunications rooms. Floor perimeters at partitions shall have wood, rubber, vinyl, marble, or carpet base.

B. Terrazzo, unglazed ceramic tile, recycled glass tile, and/or quarry tile shall be used in all restroom and service areas of Government-occupied floors.

C. Any alternate flooring must be pre-approved by the LCO.

D. The costs for cyclical carpet replacement requirements as outlined in Section 6 shall be included in the shell rent.

3.33 MECHANICAL, ELECTRICAL, PLUMBING: GENERAL (APR 2011)

The Lessor shall provide and operate all Building equipment and systems in accordance with applicable technical publications, manuals, and standard procedures. Mains, lines, and meters for utilities shall be provided by the Lessor. Exposed ducts, piping, and conduits are not permitted in office Space.

3.34 BUILDING SYSTEMS (APR 2011)

Whenever requested, the Lessor shall furnish to GSA as part of shell rent, a report by a registered professional engineer(s) showing that the Building and its systems as designed and constructed will satisfy the requirements of this Lease.

3.35 ELECTRICAL (JUN 2012)

A. The Lessor shall be responsible for meeting the applicable requirements of local codes and ordinances. When codes conflict, the more stringent standard shall apply. Main service facilities shall be enclosed. The enclosure may not be used for storage or other purposes and shall have door(s) fitted with an automatic deadlocking latch bolt with a minimum throw of 1/2 inch. Main distribution for standard office occupancy shall be provided at the Lessor's expense. All floors shall have 120/208 V, 3-phase, 4-wire with bond, 60 hertz electric service available. In no event shall such power distribution (not including lighting and HVAC) for the Space fall below 4 watts per ABOA SF.

B. Main power distribution switchboards and distribution and lighting panel boards shall be circuit breaker type with copper buses that are properly rated to provide the calculated fault circuits. All power distribution panel boards shall be supplied with separate equipment ground buses. All power distribution equipment shall be required to handle the actual specified and projected loads and 10 percent spare load capacity. Distribution panels are required to accommodate circuit breakers for the actual calculated needs and 10 percent spare circuits that will be equivalent to the majority of other circuit breakers in the panel system. Fuses and circuit breakers shall be plainly marked or labeled to identify circuits or equipment supplied through them.

C. Convenience outlets shall be installed in accordance with NFPA Standard 70, National Electrical Code, or local code, whichever is more stringent. The Lessor shall provide duplex utility outlets in restrooms, corridors, and dispensing areas.

3.36 ~~ADDITIONAL ELECTRICAL CONTROLS (JUN 2012)~~ INTENTIONALLY DELETED

3.37 PLUMBING (JUN 2012)

The Lessor shall include the cost of plumbing in common areas. Hot and cold water risers and domestic waste and vent risers, installed and ready for connections that are required for TIs, shall be included in the shell rent.

3.38 DRINKING FOUNTAINS (APR 2011)

On each floor of Government-occupied Space, the Lessor shall provide a minimum of two drinking fountains with chilled potable water within 200 feet of travel from any Government-occupied area on the floor. The fountains shall comply with Section F211 of the Architectural Barriers Act Accessibility Standard.

3.39 RESTROOMS (SEP 2013)

A. If this Lease is satisfied by new construction or major alterations, Lessor shall provide water closets, sinks and urinals on each floor that is partially or fully occupied by the government per the following schedule. The schedule is per floor and based on a density of one person for each 135 ABOA SF of office Space, allocated as 50% women and 50% men. If major alterations to the restrooms occur during the term of this Lease, the number of fixtures then must meet the schedule as part of the major alterations.

ESTIMATED TOTAL NUMBER OF PEOPLE PER FLOOR			(WOMEN'S) WATER CLOSETS	(WOMEN'S) SINKS	(MEN'S) WATER CLOSETS	(MEN'S) URINALS	(MEN'S) SINKS
1	to	8	2	1	1	1	1
9	to	24	3	2	2	1	1
25	to	36	3	2	2	1	2
37	to	56	5	3	3	2	2
57	to	75	6	4	4	2	2
76	to	96	6	5	4	2	3
97	to	119	7	5	5	2	3
120	to	134	9	5	6	3	4
Above 135			3/40	1/24	1/20	1/40	1/30

B. If no new construction or major renovation of a restroom is occurring, compliance with local code is sufficient. Separate restroom facilities for men and women shall be provided in accordance with local code or ordinances, on each floor occupied by the Government in the Building. The facilities shall be located so that employees will not be required to travel more than 200 feet on one floor to reach the restrooms. Each restroom shall have sufficient water closets enclosed with modern stall partitions and doors, urinals (in men's room), and hot (set in accordance with applicable building codes) and cold water. Water closets and urinals shall not be visible when the exterior door is open.

C. Each main restroom shall contain the following:

1. A mirror and shelf above the lavatory.

2. A toilet paper dispenser in each water closet stall that will hold at least two rolls and allow easy, unrestricted dispensing.

3. A coat hook on the inside face of the door to each water closet stall and on several wall locations by the lavatories.

4. At least one modern paper towel dispenser, soap dispenser, and waste receptacle for every two lavatories.

5. A coin-operated sanitary napkin dispenser in women's restrooms with a waste receptacle in each water closet stall.

6. A disposable toilet seat cover dispenser.

7. A counter area of at least 2 feet, 0 inches in length, exclusive of the lavatories (however, it may be attached to the lavatories) with a mirror above and a ground-fault interrupter-type convenience outlet located adjacent to the counter area. The counter should be installed to minimize pooling or spilling of water at the front edge.

8. A floor drain.

9. For new installations and major renovations, restroom partitions shall be made from recovered materials as listed in EPA's CPG.

3.40 PLUMBING FIXTURES: WATER CONSERVATION (DEC 2011)

For new installations and whenever plumbing fixtures are being replaced (replacement per floor is required prior to Lease commencement in all instances of nonconformance where the Government occupies the full floor):

A. Water closets must conform to EPA WaterSense or fixtures with equivalent flush volumes must be utilized.

B. Urinals must conform to EPA WaterSense or fixtures with equivalent flush volumes must be utilized. Waterless urinals are acceptable.

C. Faucets must conform to EPA WaterSense or fixtures with equivalent flow rates must be utilized.

Information on EPA WaterSense fixtures can be found at http://www.epa.gov/watersense/.

3.41 JANITOR CLOSETS (SEP 2015)

Janitor closets shall meet all local codes and ordinances. When not addressed by local code, Lessor shall provide containment drains plumbed for appropriate disposal of liquid wastes in spaces where water and chemical concentrate mixing occurs for maintenance purposes. Disposal is not permitted in restrooms.

3.42 HEATING, VENTILATION, AND AIR CONDITIONING - SHELL (SEP 2013)

A. Central HVAC systems shall be installed and operational, including, as appropriate, main and branch lines, VAV boxes, dampers, flex ducts, and diffusers, for an open office layout, including all Building common areas. The Lessor shall provide conditioned air through medium pressure duct work at a rate of .75 cubic feet per minute per ABOA SF and systems shall be designed with sufficient systems capacity to meet all requirements in this Lease.

B. Areas having excessive heat gain or heat loss, or affected by solar radiation at different times of the day, shall be independently controlled.

C. Equipment Performance. Temperature control for office Spaces shall be provided by concealed central heating and air conditioning equipment. The equipment shall maintain Space temperature control over a range of internal load fluctuations of plus 0.5 W/SF to minus 1.5 W/SF from initial design requirements of the tenant.

D. Ductwork Re-use and Cleaning. Any ductwork to be reused and/or to remain in place shall be cleaned, tested, and demonstrated to be clean in accordance with the standards set forth by NADCA. The cleaning, testing, and demonstration shall occur immediately prior to Government occupancy to avoid contamination from construction dust and other airborne particulates.

E. During working hours in periods of heating and cooling, ventilation shall be provided in accordance with the latest edition of American Society of Heating, Refrigeration and Air-Conditioning Engineers (ASHRAE) Standard 62.1, Ventilation for Acceptable Indoor Air Quality.

F. Air filtration shall be provided and maintained with filters having a minimum efficiency rating as determined by the latest edition of ASHRAE Standard 52.2, Method of Testing General Ventilation Air Cleaning Devices for Removal Efficiency by Particle Size. Pre-filters shall have a Minimum Efficiency Reporting Value (MERV) efficiency of 8. Final filters shall have a MERV efficiency of 13.

G. Restrooms shall be properly exhausted, with a minimum of 10 air changes per hour.

H. INTENTIONALLY DELETED

3.43 TELECOMMUNICATIONS: DISTRIBUTION AND EQUIPMENT (SEP 2015)

A. Sufficient space shall be provided on the floor(s) where the Government occupies Space for the purposes of terminating telecommunications service into the Building. The Building's telecommunications closets located on all floors shall be vertically-stacked. Telecommunications switch rooms, wire closets, and related spaces shall be enclosed. The enclosure shall not be used for storage or other purposes and shall have door(s) fitted with an automatic door-closer and deadlocking latch bolt with a minimum throw of 1/2 inch. The telephone closets shall include a telephone backboard.

B. Telecommunications switch rooms, wire closets, and related spaces shall meet applicable Telecommunications Industry Association (TIA) and Electronic Industries Alliance (EIA) standards. These standards include the following:

1. TIA/EIA-568, Commercial Building Telecommunications Cabling Standard,
2. TIA/EIA 569, Commercial Building Standard for Telecommunications Pathways and Spaces,
3. TIA/EIA-570, Residential and Light Commercial Telecommunications Wiring Standard, and
4. TIA/EIA-607, Commercial Building Grounding and Bonding Requirements for Telecommunications Standard.

C. Telecommunications switch rooms, wire closets, and related spaces shall meet applicable NFPA standards. Bonding and grounding shall be in accordance with NFPA Standard 70, National Electrical Code, and other applicable NFPA standards and/or local code requirements.

3.44 TELECOMMUNICATIONS: LOCAL EXCHANGE ACCESS (JUN 2012)

A. The Government may elect to contract its own telecommunications (voice, data, video, Internet or other emerging technologies) service in the Space. The Government may contract with one or more parties to have INS wiring (or other transmission medium) and telecommunications equipment installed.

B. The Lessor shall allow the Government's designated telecommunications providers access to utilize existing Building wiring to connect its services to the Government's Space. If the existing Building wiring is insufficient to handle the transmission requirements of the Government's designated telecommunications providers, the Lessor shall provide access from the point of entry into the Building to the Government's floor Space, subject to any inherent limitations in the pathway involved.

C. The Lessor shall allow the Government's designated telecommunications providers to affix telecommunications antennas (high frequency, mobile, microwave, satellite, or other emerging technologies), subject to weight and wind load conditions, to roof, parapet, or Building envelope as required. Access from the antennas to the Premises shall be provided.

D. The Lessor shall allow the Government's designated telecommunications providers to affix antennas and transmission devices throughout the Space and in appropriate common areas frequented by the Government's employees to allow the use of cellular telephones and communications devices necessary to conduct business.

3.45 LIGHTING: INTERIOR AND PARKING - SHELL (SEP 2013)

NOTE: FOR PRICING ESTIMATING PURPOSES, FIXTURES WILL BE INSTALLED AT THE AVERAGE RATIO OF 1 FIXTURE PER 80 ABOA SF.

A. INTERIOR FIXTURES: High efficiency T-8, T-5, or LED light fixtures (and associated ballasts or drivers) shall be installed as either ceiling grid or pendant mounted for an open-office plan. Ceiling grid fixtures shall be either 2' wide by 4' long or 2' wide by 2' long. Lessor shall provide, as part of Shell Rent, a minimum overall lighting fixture efficiency of 85 percent. Lamps shall maintain a uniform color level throughout the lease term.

B. LIGHTING LEVELS: Fixtures shall have a minimum of two tubes and shall provide 50 foot-candles at desktop level (30" above finished floor) with a maximum uniformity ratio of 1.5:1. Lessor shall provide, as part of Shell Rent, 10 average foot-candles in all other Building areas within the Premises with a uniformity ratio of 4:1. Emergency egress lighting levels shall be provided in accordance with the local applicable building codes (but not less than 1 foot-candle) by either an onsite emergency generator or fixture mounted battery packs.

C. POWER DENSITY:

Existing Buildings: The maximum fixture power density shall not exceed 1.4 watts per ABOA SF.
New Construction: The maximum fixture power density shall not exceed 1.1 watts per ABOA SF.

D. DAYLIGHTING CONTROLS: If the Lease is more than 10,000 ABOA SF, the Lessor shall provide daylight dimming controls in atriums or within 15 feet of windows and skylights where daylight can contribute to energy savings. Daylight harvesting sensing and controls shall be either integral to the fixtures or ceiling mounted and shall maintain required lighting levels in work spaces.

E. OCCUPANCY/VACANCY SENSORS: The Lessor shall provide ceiling mount occupancy sensors, or vacancy sensors (preferred), or scheduling controls through the building automation system (BAS) throughout the Space in order to reduce the hours that the lights are on when a particular space is unoccupied. No more than 1,000 square feet shall be controlled by any one sensor. Occupancy sensors in enclosed rooms shall continue to operate after the BAS has shutdown the building at the end of the workday.

F. BUILDING PERIMETER:

1. Exterior parking areas, vehicle driveways, pedestrian walks, and the Building perimeter lighting levels shall be designed per Illuminating Engineering Society (IES) standards. Provide 5 foot-candles for doorway areas, 3 foot-candles for transition areas and at least 5 foot-candles throughout the parking lot. Parking lot fixtures shall provide a maximum to minimum uniformity ratio of 10:1.

2. If the leased space is 100 percent occupied by Government tenants, all exterior parking lot fixtures shall be "Dark Sky" compliant with no property line trespass.

G. PARKING STRUCTURES: The minimum illuminance level for parking structures is 5 foot-candles as measured on the floor with a uniformity ratio of 10:1.

H. PARKING SENSORS: If the leased space is 100 percent occupied by Government tenants, exterior parking area and parking structure lighting shall be sensor or BAS controlled in order that it may be programmed to produce reduced lighting levels during non use. This non-use time period will normally be from 11:00 pm to 6:00 am.

I. EXTERIOR POWER BACKUP: Exterior egress, walkway, parking lot, and parking structure lighting must have emergency power backup to provide for safe evacuation of the Building.

3.46 ACOUSTICAL REQUIREMENTS (JUN 2012)

A. Reverberation Control. Private office and conference rooms using suspended acoustical ceilings shall have a noise reduction coefficient (NRC) of not less than 0.65 in accordance with ASTM C-423. Open office using suspended acoustical ceilings shall have an NRC of not less than 0.75. Private offices, conference rooms, and open offices using acoustical cloud or acoustical wall panels with a minimum of 70% coverage shall have an NRC of not less than 0.85.

B. Ambient Noise Control. Ambient noise from mechanical equipment shall not exceed noise criteria curve (NC) 35 in accordance with the ASHRAE Handbook of Fundamentals in offices and conference rooms; NC 40 in corridors, cafeterias, lobbies, and restrooms; NC 50 in other spaces.

C. Noise Isolation. Rooms separated from adjacent spaces by ceiling high partitions (not including doors) shall not be less than the following noise isolation class (NIC) standards when tested in accordance with ASTM E-336:

Conference rooms: NIC 40
Offices: NIC 35

D. Testing. The LCO may require, at Lessor's expense, test reports by a qualified acoustical consultant showing that acoustical requirements have been met.

3.47 ~~SECURITY FOR NEW CONSTRUCTION (NOV 2005)~~ INTENTIONALLY DELETED

3.48 ~~SEISMIC SAFETY FOR NEW CONSTRUCTION (SEP 2012)~~ INTENTIONALLY DELETED

3.49 ~~FIRE PROTECTION FOR NEW CONSTRUCTION (APR 2015)~~ INTENTIONALLY DELETED

3.50 ~~LEADERSHIP IN ENERGY AND ENVIRONMENTAL DESIGN FOR NEW CONSTRUCTION (LEED-NC) (SEP 2013)~~ INTENTIONALLY DELETED

3.51 ~~LEADERSHIP IN ENERGY AND ENVIRONMENTAL DESIGN FOR COMMERCIAL INTERIORS (LEED-CI) (SEP 2013)~~ INTENTIONALLY DELETED

3.52 INDOOR AIR QUALITY DURING CONSTRUCTION (SEP 2013)

A. The Lessor shall provide to the Government material safety data sheets (MSDS) or other appropriate documents upon request, but prior to installation or use for the following products, including but not limited to, adhesives, caulking, sealants, insulating materials, fireproofing or fire stopping materials, paints, carpets, floor and wall patching or leveling materials, lubricants, clear finishes for wood surfaces, janitorial cleaning products, and pest control products.

B. The LCO may eliminate from consideration products with significant quantities of toxic, flammable, corrosive, or carcinogenic material and products with potential for harmful chemical emissions. Materials used often or in large quantities will receive the greatest amount of review.

C. All MSDS shall comply with Occupational Safety and Health Administration (OSHA) requirements. The Lessor and its agents shall comply with all recommended measures in the MSDS to protect the health and safety of personnel.

D. To the greatest extent possible, the Lessor shall sequence the installation of finish materials so that materials that are high emitters of volatile organic compounds (VOCs) are installed and allowed to cure before installing interior finish materials, especially soft materials that are woven, fibrous, or porous in nature, that may adsorb contaminants and release them over time.

E. Where demolition or construction work occurs adjacent to occupied Space, the Lessor shall erect appropriate barriers (noise, dust, odor, etc.) and take necessary steps to minimize interference with the occupants. This includes maintaining acceptable temperature, humidity, and ventilation in the occupied areas during window removal, window replacement, or similar types of work.

F. HVAC during Construction: If air handlers are used during construction, the Lessor shall provide filtration media with a MERV of 8 at each return air grill, as determined by the latest edition of ASHRAE Standard 52.2, Method of Testing General Ventilation Air Cleaning Devices for Removal Efficiency by Particle Size. The permanent HVAC system may be used to move both supply and return air during the construction process only if the following conditions are met:

1. A complete air filtration system with 60 percent efficiency filters is installed and properly maintained;

2. No permanent diffusers are used;

3. No plenum type return air system is employed;

4. The HVAC duct system is adequately sealed to prevent the spread of airborne particulate and other contaminants; and

5. Following the Building "flush out," all duct systems are vacuumed with portable high-efficiency particulate arrestance (HEPA) vacuums and documented clean in accordance with National Air Duct Cleaners Association (NADCA) specifications.

G. Flush-Out Procedure:

1. A final flush-out period of 72 hours minimum is required after installation of all interior finishes and before occupancy of the Space. The Lessor shall ventilate 24 hours a day, with new filtration media at 100% outdoor air (or maximum outdoor air while achieving a relative humidity not greater than 60%).

2. After the 3-day period the Space may be occupied; however, the flush-out must continue for 30 days using the maximum percentage of outdoor air consistent with achieving thermal comfort and humidity control.

3. Any deviation from this ventilation plan must be approved by the LCO.

4. The Lessor is required to provide regularly occupied areas of the Space with new air filtration media before occupancy that provides a MERV of 13 or better.

5. During construction, meet or exceed the recommended design approaches of the Sheet Metal and Air Conditioning National Contractors Association (SMACNA) IAQ Guideline for Occupied Buildings Under Construction, 1995, Chapter 3.

6. Protect stored onsite and installed absorptive materials from moisture damage.

3.53 SYSTEMS COMMISSIONING (APR 2011)

The Lessor shall incorporate commissioning requirements to verify that the installation and performance of energy consuming systems meet the Government's project requirements. The commissioning shall cover only work associated with TIs or alterations or at a minimum: heating, ventilating, air conditioning and refrigeration (HVAC&R) systems and associated controls, lighting controls, and domestic hot water systems.

3.54 ~~DUE DILIGENCE AND NATIONAL ENVIRONMENTAL POLICY ACT REQUIREMENTS – LEASE (SEP 2014)~~ INTENTIONALLY DELETED

3.55 ~~NATIONAL HISTORIC PRESERVATION ACT REQUIREMENTS - LEASE (SEP 2014)~~ INTENTIONALLY DELETED

SECTION 4 DESIGN, CONSTRUCTION, AND POST AWARD ACTIVITIES

4.01 SCHEDULE FOR COMPLETION OF SPACE (SEP 2015)

Design and construction activities for the Space shall commence upon Lease award. The Lessor shall schedule the following activities to achieve timely completion of the work required by this Lease:

A. Government-Provided Design Intent Drawings (DIDs): The Government shall prepare and provide to the Lessor the Government's approved DIDs based upon the base Building documents provided by the Lessor as required in the paragraph titled "Documents Incorporated in the Lease" paragraph of this Lease. These DIDs will detail the TIs to be made by the Lessor within the Space. DIDs shall be due to the Lessor within **120** Working Days from award.

B. DIDs. For the purposes of this Lease, DIDs are defined as fully dimensioned drawings of the leased Space which reflect all Lease requirements provided by the Government sufficient for the preparation of construction documents (CDs), including, but not limited to:

1. Generic furniture layout, wall, door, and built-in millwork locations;
2. Telephone, electrical, and data outlet types and locations;
3. Information necessary for calculation of electrical and HVAC loads;
4. Work related to security requirements; and
5. All finish selections.

C. INTENTIONALLY DELETED

D. The Lessor's preparation and submission of construction documents (CDs): The Lessor as part of the TI must complete CDs conforming to the approved DIDs not later than **Sixty (60)** Working Days following the approval of DIDs. The pricing for this work is included under the A/E fees established under Section 1 of the Lease. If during the preparation of CDs the Lessor becomes aware that any material requirement indicated in the approved DIDs cannot be reasonably achieved, the Lessor shall promptly notify GSA, and shall not proceed with completion of CDs until direction is received from the LCO. The LCO shall provide direction within **Five (5)** Working Days of such notice, but the Government shall not be responsible for delays to completion of CDs occasioned by such circumstances. For the purpose of this paragraph, a "material requirement" shall mean any requirement necessary for the Government's intended use of the Space as provided for in, or reasonably inferable from, the Lease and the approved DIDs (e.g., number of workstations and required adjacencies).

E. Government review of CDs: The Government shall have **Ten (10)** Working Days to review CDs before Lessor proceeds to prepare a TI price proposal for the work described in the CDs. At any time during this period of review, the Government shall have the right to require the Lessor to modify the CDs to enforce conformance to Lease requirements and the approved DIDs.

F. The Lessor's preparation and submission of the TI price proposal: The Lessor shall prepare and submit a complete TI price proposal in accordance with this Lease within **Twenty (20)** Working Days following the end of the Government CD review period.

G. INTENTIONALLY DELETED

H. Negotiation of TI and BSAC price proposals and issuance of notice to proceed (NTP): The Government shall issue NTP within **fifteen (15)** Working Day following the submission of the TI and BSAC price proposals, unless these have been priced as turnkey, provided that price proposals conform to the requirements of the Lease and the parties negotiate a fair and reasonable price.

I. Construction of TIs and completion of other required construction work: The Lessor shall complete all work required to prepare the Premises as required in this Lease ready for use not later than **sixty (60)** Working days following issuance of NTP.

4.02 CONSTRUCTION DOCUMENTS (SEP 2012)

The Lessor's CDs shall include all mechanical, electrical, plumbing, fire protection, life safety, lighting, structural, security, and architectural improvements scheduled for inclusion into the Space. CDs shall be annotated with all applicable specifications. CDs shall also clearly identify TIs already in place and the work to be done by the Lessor or others. Notwithstanding the Government's review of the CDs, the Lessor is solely responsible and liable for their technical accuracy and compliance with all applicable Lease requirements.

4.03 TENANT IMPROVEMENTS PRICE PROPOSAL (SEP 2015)

A. The Lessor's TI price proposal shall be supported by sufficient cost or pricing data to enable the Government to evaluate the reasonableness of the proposal, or documentation that the Proposal is based upon competitive proposals (as described in the "Tenant Improvements Pricing Requirements" paragraph) obtained from entities not affiliated with the Lessor. Any work shown on the CDs that is required to be included in the Building shell rent or already priced as BSAC shall be clearly identified and excluded from the TI price proposal. After negotiation and acceptance of the TI price, GSA shall issue a NTP to the Lessor.

B. Under the provisions of FAR Subpart 15.4, the Lessor shall submit a TI price proposal with information that is adequate for the Government

to evaluate the reasonableness of the price or determining cost realism for the TIs within the time frame specified in this section. The TI price proposal shall use the fee rates specified in the "Tenant Improvement Fee Schedule" paragraph of this Lease. The Lessor shall exclude from the TI price proposal all costs for fixtures and/or other TIs already in place, provided the Government has accepted same. However, the Lessor will be reimbursed for costs to repair or improve the fixture(s) and/or any other improvements already in place. The Lessor must provide certified cost or pricing data for TI proposals exceeding the threshold in FAR 15.403-4, to establish a fair and reasonable price. For TI proposals that do not exceed the threshold in FAR 15-403-4, the Lessor shall submit adequate documentation to support the reasonableness of the price proposal as determined by the LCO.

C. The TIs scope of work includes the Lease, the DIDs, the CDs, and written specifications. In cases of discrepancies, the Lessor shall immediately notify the LCO for resolution. All differences will be resolved by the LCO in accordance with the terms and conditions of the Lease.

D. In lieu of requiring the submission of detailed cost or pricing data as described above, the Government (in accordance with FAR 15.403) is willing to negotiate a price based upon the results of a competitive proposal process. A minimum of two qualified General Contractors (GCs) shall be invited by the Lessor to participate in the competitive proposal process. Each participant shall compete independently in the process. In the absence of sufficient competition from the GCs, a minimum of two qualified subcontractors from each trade of the Tenant Improvement Cost Summary (TICS) Table (described below) shall be invited to participate in the competitive proposal process.

E. Each TI proposal shall be (1) submitted by the proposed General Contractors (or subcontractors) using the TICS Table in CSI Masterformat; (2) reviewed by the Lessor prior to submission to the Government to ensure compliance with the scope of work (specified above) and the proper allocation of shell and TI costs; and (3) reviewed by the Government. General Contractors shall submit the supporting bids from the major subcontractors along with additional backup to the TICS Table in a format acceptable to the Government. Backup will follow the TICS table Master format cost elements and be to level 5 as described in P-120, Project Estimating Requirements for the Public Buildings Service.

F. Unless specifically designated in this Lease as a TI or BSAC cost, all construction costs shall be deemed to be included in the Shell Rent. Any costs in the GC's proposal for Building shell items shall be clearly identified on the TICS Table separately from the TI costs.

G. The Government reserves the right to determine if bids meet the scope of work, that the price is reasonable, and that the Lessor's proposed contractors are qualified to perform the work. The Government reserves the right to reject all bids at its sole discretion. The Government reserves the right to attend or be represented at all negotiation sessions between the Lessor and potential contractors.

H. The Lessor shall demonstrate to the Government that best efforts have been made to obtain the most competitive prices possible, and the Lessor shall accept responsibility for all prices through direct contracts with all contractors. The LCO shall issue to the Lessor a NTP with the TIs upon the Government's sole determination that the Lessor's proposal is acceptable. The Lessor shall complete the work within the time frame specified in this section of the Lease.

4.04 ~~BUILDING SPECIFIC AMORTIZED CAPITAL (BSAC) PRICE PROPOSAL (SEP 2015)~~ INTENTIONALLY DELETED

4.05 GREEN LEASE SUBMITTALS (SEP 2015)

The Lessor shall submit to the LCO:

A. Product data sheets for floor coverings, paints and wall coverings, ceiling materials, all adhesives, wood products, suite and interior doors, subdividing partitions, wall base, door hardware finishes, window coverings, millwork substrate and millwork finishes, lighting and lighting controls, and insulation to be used within the leased Space. This information must be submitted NO LATER THAN the submission of the DIDs, if applicable.

B. MSDS or other appropriate documents upon request for products listed in the Lease.

C. Re-use plan required in accordance with the "Existing Fit-out, Salvaged, or Re-used Building Material" paragraph in the Lease.

D. Any waiver needed when not using materials from the CPG and RMAN lists of acceptable products in accordance with the "Recycled Content Products" paragraph in the Lease.

E. Radon test results as may be required by the "Radon in Air" and "Radon in Water" paragraphs in the Lease.

F. Construction waste management plan: Prior to construction commencement, a proposed plan following industry standards to recycle construction waste. The construction waste management plan shall quantify material diversion goals and maximize the materials to be recycled and/or salvaged (at least 50 percent) from construction, demolition, and packaging debris. Where the small quantity of material, the extraordinarily complex nature of the waste disposal method, or prohibitive expense for recycling would represent a genuine hardship, the Government, upon written request of the Lessor and approval of the LCO, may permit alternative means of disposal.

G. Building recycling service plan: A Building recycling service plan with floor plans annotating recycling area(s) as part of DIDs, if applicable, to be reflected on the CD submission.

H. A signed statement from the Lessor for the leased Space explaining how all HVAC systems serving the leased Space will achieve the desired ventilation of the Space during the flush-out period called for in the Lease.

I. A written commissioning plan submitted to the LCO prior to the completion of DIDs, if applicable, that includes:

1. A schedule of systems commissioning (revised as needed during all construction phases of the project, with such revisions provided to the LCO immediately); and

2. A description of how commissioning requirements will be met and confirmed.

J. INTENTIONALLY DELETED

K. If renewable source power is purchased, documentation within 9 months of occupancy.

4.06 CONSTRUCTION SCHEDULE AND INITIAL CONSTRUCTION MEETING (APR 2011)

The Lessor shall furnish a detailed construction schedule (such as Critical Path Method) to the Government within **five (5)** Working Day of issuance of the NTP. Such schedule shall also indicate the dates available for Government contractors to install telephone/data lines or equipment, if needed. Within **five (5)** Working Days of NTP, the Lessor shall initiate a construction meeting. The Lessor will have contractor representatives including its architects, engineers, general contractor and sub-contractor representatives in attendance. The Lessor shall keep meeting minutes of discussion topics and attendance.

4.07 PROGRESS REPORTS (JUN 2012)

After start of construction, the Lessor shall submit to the LCO written progress reports at intervals of **Ten (10)** Working Days. Each report shall include information as to the percentage of the work completed by phase and trade; a statement as to expected completion and occupancy dates; changes introduced into the work; and general remarks on such items as material shortages, strikes, weather, etc, that may affect timely completion. In addition, at the Government's discretion, the Lessor shall conduct meetings every two weeks to brief Government personnel and/or contractors regarding the progress of design and construction of the Space. The Lessor shall be responsible for taking and distributing minutes of these meetings.

4.08 CONSTRUCTION INSPECTIONS (SEP 2015)

A. The LCO or the LCO's designated technical representative may periodically inspect construction work to review compliance with Lease requirements and approved DIDs, if applicable.

B. Periodic reviews, witnessing of tests, and inspections by the Government shall not constitute approval of the Lessor's apparent progress toward meeting the Government's objectives but are intended to discover any information which the LCO may be able to call to the Lessor's attention to prevent costly misdirection of effort. The Lessor shall remain responsible for designing, constructing, operating, and maintaining the Building in full accordance with the requirements of the Lease.

4.09 ACCESS BY THE GOVERNMENT PRIOR TO ACCEPTANCE (SEP 2013)

The Government shall have the right to access any space within the Building during construction for the purposes of performing inspections or installing Government furnished equipment. The Government shall coordinate the activity of Government contractors with the Lessor to minimize conflicts with and disruption to other contractors on site. Access shall not be unreasonably denied to authorized Government officials including, but not limited to, Government contractors, subcontractors, or consultants acting on behalf of the Government on this project.

4.10 ACCEPTANCE OF SPACE AND CERTIFICATE OF OCCUPANCY (SEP 2015)

A. Ten (10) Working Days prior to the completion of the Space, the Lessor shall issue written notice to the Government to schedule the inspection of the Space for acceptance. The Government shall accept the Space only if the construction of Building shell and TIs conforming to this Lease and the approved DIDs, if applicable, is substantially complete, a Certificate of Occupancy (C of O) has been issued as set forth below, and the Building improvements necessary for acceptance as described in the paragraph "Building Improvements" are completed.

B. The Space shall be considered substantially complete only if the Space may be used for its intended purpose, and completion of remaining work will not interfere unreasonably with the Government's enjoyment of the Space. Acceptance shall be final and binding upon the Government with respect to conformance of the completed TIs to the approved DIDs, with the exception of items identified on a punch list generated as a result of the inspection, concealed conditions, latent defects, or fraud, but shall not relieve the Lessor of any other Lease requirements.

C. The Lessor shall provide a valid C of O, issued by the local jurisdiction, for the intended use of the Government. If the local jurisdiction does not issue C of O's or if the C of O is not available, the Lessor may satisfy this condition by providing a report prepared by a licensed fire protection engineer that indicates the Space and Building are compliant with all applicable local codes and ordinances and all fire protection and life safety-related requirements of this Lease.

D. The Government will not be required to accept space prior to the schedule outlined in this Lease.

4.11 LEASE TERM COMMENCEMENT DATE AND RENT RECONCILIATION (JUN 2012)

At acceptance, the Space shall be measured in accordance with the standards set forth in this Lease to determine the total ABOA SF in the Space. The rent for the Space will be adjusted based upon the measured ABOA square footage as outlined under the Payment clause of the General Clauses. At acceptance, the Lease term shall commence. The Lease Term Commencement Date, final measurement of the Premises, reconciliation of the annual rent, and amount of Commission Credit, if any, shall be memorialized by Lease Amendment.

4.12 AS-BUILT DRAWINGS (JUN 2012)

Not later than **thirty (30)** Working Days after the acceptance of the Space, the Lessor, at Lessor's expense, shall furnish to the Government a complete set of Computer Aided Design (CAD) files of as-built floor plans showing the Space under Lease, as well as corridors, stairways, and core areas. The plans shall have been generated by a CAD program which is compatible with the latest release of AutoCAD. The required file extension is ".DWG." Clean and purged files shall be submitted on CD-ROM. They shall be labeled with Building name, address, list of drawing(s), date of the

drawing(s), and Lessor's architect and architect's phone number. The Lessor's operator shall demonstrate the submission on GSA equipment, if requested by the LCO.

4.13 LIQUIDATED DAMAGES (JUN 2012)

In case of failure on the part of the Lessor to complete the work within the time fixed in the Lease, the Lessor shall pay the Government as fixed and agreed liquidated damages one (1) days' rent for each and every calendar day that the delivery is delayed beyond the date specified for delivery of all the Space ready for occupancy by the Government. This remedy is not exclusive and is in addition to any other remedies which may be available under this Lease or at law. This liquidated sum is not meant as a penalty, but as an approximation of actual damages that would be suffered by the Government because of the Lessor's delay.

4.14 ~~SEISMIC RETROFIT (SEP 2013)~~ INTENTIONALLY DELETED

4.15 LESSOR'S PROJECT MANAGEMENT FEE (SEP 2013)

A. The Lessor's project management fee shall cover all of the Lessor's project management costs associated with the delivery of Tenant Improvements, including, but not limited to:

1. Legal fees
2. Travel costs
3. Insurance
4. Home office overhead and other indirect costs
5. Carrying costs, exclusive of the TI amortization rate. Carrying costs are those costs of capital incurred for the delivery of TI, for the period starting from Lessor's outlay of funds, until the Lease Term Commencement Date.
6. Municipal, county, or state fees (not related to sales tax)
7. TI proposal preparation costs
8. Lessor's labor costs related to the management of the TI build-out.

B. At a minimum, the Lessor shall be responsible for performing the following services in order to receive the project management fee:

1. Provide assistance and expertise to the Government project team in the form of coordination, management, and administration of the design and construction process;
2. Monitor performance of the general contractor and other contractors, control schedules, and oversee financial accounts;
3. Conduct and document design and construction project meetings;
4. Perform administrative tasks, including documentation, record keeping (issuing meeting minutes), and payment validation in addition to submittal and change order processing;
5. Maintain Request for Information (RFI), submittal, and change order logs; and
6. Provide technical expertise (e.g. testing, estimating, resolving claims, or responding to inquiries).

SECTION 5 TENANT IMPROVEMENT COMPONENTS

5.01 TENANT IMPROVEMENT REQUIREMENTS (SEP 2013)

The TIs shall be designed, constructed, and maintained in accordance with the standards set forth in this Lease. For pricing, only those requirements designated as TIs within this section, or designated as TIs within the attached agency requirements and Security Requirements, shall be deemed to be TI costs.

5.02 ~~TENANT IMPROVEMENT SPECIFICATIONS (SEP 2015)~~ INTENTIONALLY DELETED

5.03 FINISH SELECTIONS (SEP 2015)

The Lessor must consult with the Government prior to developing a minimum of three (3) finish options to include coordinated samples of finishes for all interior elements such as paint, wall coverings, base coving, carpet, window treatments, laminates, and flooring. All samples provided must comply with specifications set forth elsewhere in this Lease. All required finish option samples must be provided at no additional cost to the Government within 10 Working Days after initial submission of DIDs, if applicable. GSA must deliver necessary finish selections to the Lessor within 10 Working Days after receipt of samples. The finish options must be approved by GSA prior to installation. The Lessor may not make any substitutions after the finish option is selected.

5.04 WINDOW COVERINGS (JUN 2012)

A. Window Blinds. All exterior windows shall be equipped with window blinds in new or like new condition, which shall be provided as part of the TIs. The blinds may be aluminum or plastic vertical blinds, horizontal blinds with aluminum slats of one-inch width or less, solar fabric roller shades, or an equivalent product pre-approved by the Government. The window blinds shall have non-corroding mechanisms and synthetic tapes. Color selection will be made by the Government.

B. INTENTIONALLY DELETED

5.05 DOORS: SUITE ENTRY (SEP 2013)

Suite entry doors shall be provided as part of the TIs and shall have a minimum clear opening of 32" wide x 84" high (per leaf). Doors shall meet the requirements of being a flush, solid core, 1-3/4-inch thick, wood door with a natural wood veneer face or an equivalent pre-approved by the Government. Hollow core wood doors are not acceptable. They shall be operable by a single effort; and shall meet the requirement of NFPA 101, Life Safety Code or the International Building Code (current as of the Lease Award Date). Doors shall be installed in a metal frame assembly which is primed and finished with a low VOC semi gloss oil-based paint finish with no formaldehyde.

5.06 DOORS: INTERIOR (SEP 2013)

Doors within the Space shall be provided as part of the TIs and shall have a minimum clear opening of 32" wide x 80" high. Doors shall be flush, solid core, wood with a natural wood veneer face or an equivalent door pre-approved by the LCO. Hollow core wood doors are not acceptable. They shall be operable with a single effort, and shall meet the requirements of NFPA 101, Life Safety Code or the International Building Code (current as of the Lease Award Date). Doors shall be installed in a metal frame assembly which is primed and finished with a low VOC semi-gloss oil-based paint with no formaldehyde.

5.07 DOORS: HARDWARE (SEP 2013)

Doors shall have door handles or door pulls with heavyweight hinges. The Lessor is encouraged to avoid the use of chrome-plated hardware. All doors shall have corresponding doorstops (wall- or floor-mounted) and silencers. All door entrances leading into the Space from public corridors and exterior doors shall have automatic door closers. Doors designated by the Government shall be equipped with 5-pin, tumbler cylinder locks and strike plates. All locks shall be master keyed. Furnish at least two master keys for each lock to the Government. Any exterior entrance shall have a high security lock, with appropriate key control procedures, as determined by Government specifications. Hinge pins and hasps shall be secured against unauthorized removal by using spot welds or pinned mounting bolts. The exterior side of the door shall have a lock guard or astragal to prevent tampering of the latch hardware. Doors used for egress only shall not have any operable exterior hardware. All security-locking arrangements on doors used for egress shall comply with requirements of NFPA 101or the International Building Code current as of the Lease Award Date.

5.08 DOORS: IDENTIFICATION (JUN 2012)

Door identification shall be installed in approved locations adjacent to office entrances as part of the TIs. The form of door identification shall be approved by the Government.

5.09 PARTITIONS: SUBDIVIDING (SEP 2015)

A. Office subdividing partitions shall comply with applicable building codes and local requirements and ordinances and shall be provided as part of the TIs. Partitioning shall extend from the finished floor to the finished ceiling and shall be designed to provide a minimum sound transmission class (STC) of 37. Partitioning shall be installed by the Lessor at locations to be determined by the Government as identified in the DIDs, if applicable. They shall have a flame spread rating of 25 or less and a smoke development rating of 450 or less (ASTM E-84).

B. HVAC shall be rebalanced and lighting repositioned, as appropriate, after installation of partitions.

C. If installed in accordance with the "Automatic Fire Sprinkler System" and "Fire Alarm System" paragraphs, sprinklers and fire alarm notification appliances shall be repositioned as appropriate after installation of partitions to maintain the level of fire protection and life safety.

D. Partitioning requirements may be satisfied with existing partitions if they meet the Government's standards and layout requirements.

E. Newly installed gypsum board material must be Greenguard Gold Certified or have 0 grams per liter of VOCs.

5.10 WALL FINISHES (JUN 2012)

If the Government chooses to install a high-performance paint coating, it shall comply with the VOC limits of the Green Seal Standard GS-11.

5.11 PAINTING – TI (SEP 2013)

A. Prior to acceptance, all surfaces within the Space which are designated by GSA for painting shall be newly finished in colors acceptable to the Government.

B. The Lessor shall provide interior paints and coatings that meet or are equivalent to the following standards for VOC off gassing:

1. Topcoat paints: Green Seal Standard GS-11, Paints, First Edition, May 20, 1993.

2. All other architectural coatings, primers, and undercoats: South Coast Air Quality Management District (SCAQMD) Rule 1113, Architectural Coatings, effective January 1, 2004.

3. Architectural paints, coatings, and primers applied to interior walls and ceilings:

   a. Flats: 50 grams per liter (g/L).

   b. Non-flats: 150 g/L.

4. Anti-corrosive and anti-rust paints applied to interior ferrous metal substrates: 250 g/L.

5. Clear wood finishes:

   a. Varnish: 350 g/L.

   b. Lacquer: 550 g/L.

6. Floor coatings: 100 g/L.

7. Sealers:

   a. Waterproofing sealers: 250 g/L.

   b. Sanding sealers: 275 g/L.

   c. All other sealers: 200 g/L.

8. Shellacs:

   a. Clear: 730 g/L.

   b. Pigmented: 550 g/L.

9. Stains: 250 g/L.

C. Use reprocessed latex paint in accordance with EPA's CPG (Comprehensive Procurement Guidelines) on all painted surfaces where feasible. The type of paint shall be acceptable to the Government.

5.12 FLOOR COVERINGS AND PERIMETERS (APR 2015)

A. Carpet tiles shall meet the requirements set forth in the specifications below. Floor perimeters at partitions shall have wood, rubber, vinyl, or carpet base. Floor covering shall be installed in accordance with manufacturing instructions to lay smoothly and evenly.

B. The use of existing carpet may be approved by the Government; however, existing carpet shall be repaired, stretched, and cleaned before occupancy and shall meet the static buildup requirement as stated in the specifications below.

C. Any alternate flooring shall be pre-approved by the Government.

D. SPECIFICATIONS FOR CARPET TO BE NEWLY INSTALLED OR REPLACED

1. Product sustainability and environmental requirements. In order to achieve superior performance in multiple environmental attribute areas, carpet must have third party certification in accordance with ANSI/NSF 140 2007e Sustainable Carpet Assessment Standard at a "Gold" level minimum. Carpet manufacturer must supply certificate as part of the procurement documentation.

2. Recycled content: Recycled content is measured by total product weight of pre-consumer and/or post-consumer materials. Recycled content must be at least 10% post-consumer recovered content.

3. Low emitting materials. The carpet and floor adhesive (for glue-down installations) must meet the Green Label Plus (GLP) and floor adhesive (for direct glue down) requirements of the Carpet and Rug Institute (CRI). GLP number must be provided. Adhesives must meet VOC content standards per South Coast Air Quality Management District Rule #1168.

4. Face fiber content. Face yarn must be 100 percent nylon fiber. Loop Pile shall be 100 percent Bulk Continuous Filament (BCF); cut and loop shall be 100 percent BCF for the loop portion and may be BCF or staple for the cut portion; cut pile carpet shall be staple or BCF.

5. Performance requirements for broadloom and modular tile:

a. Static: Less than or equal to 3.5 kV when tested by AATCC Test Method 134 (Step Test Option).

b. Flammability: Meets CPSC-FF-1-70, DOC-FF-1-70 Methenamine Tablet Test criteria.

c. Flooring Radiant Panel Test: Meets NFPA 253 Class I or II depending upon occupancy and fire code when tested under ASTM E-648 for glue down installation.

d. Smoke Density: NBS Smoke Chamber - Less than 450 Flaming Mode when tested under ASTM E-662.

NOTE: Testing must be performed in a NVLAP accredited laboratory.

6. Texture Appearance Retention Rating (TARR). Carpet must meet TARR ratings specified below:

Space Definition	Traffic Classification	TARR Classification
Private Offices	Moderate	≥ 3.0 TARR
Training, conference, courtrooms, etc.	Heavy	≥ 3.0 TARR
Open Office, cafeteria, corridors, lobbies	Severe	≥ 3.5 TARR

The carpet must be evaluated using ASTM D-5252 Hexapod Drum Test as per the commercial carpet test procedure and the TARR classification determined using ASTM D-7330.

7. Carpet reclamation. Reclamation of existing carpet to be determined with potential vendor. When carpet is replaced, submit certification documentation from the reclamation facility to the LCO.

8. Warranty. Submit a copy of the manufacturer's standard warranty to the LCO within the first 60 days of Government occupancy. The Government is to be a beneficiary of the terms of this warranty.

5.13 HEATING AND AIR CONDITIONING (JUN 2012)

Zone Control. Provide individual thermostat control for office Space with control areas not to exceed 1,500 ABOA SF. Interior spaces must be separately zoned. Specialty occupancies (conference rooms, kitchens, etc.) must have active controls capable of sensing Space use and modulating HVAC system in response to Space demand. Areas that routinely have extended hours of operation shall be environmentally controlled through dedicated heating and air conditioning equipment. Special purpose areas (such as photocopy centers, large conference rooms, computer rooms, etc.) with an internal cooling load in excess of 5 tons shall be independently controlled. Provide concealed package air conditioning equipment to meet localized spot cooling of tenant special equipment. Portable space heaters are prohibited.

5.14 ELECTRICAL: DISTRIBUTION (SEP 2015)

A. All electrical, telephone, and data outlets within the Space shall be installed by the Lessor in accordance with the DIDs, if applicable. All electrical outlets shall be installed in accordance with NFPA Standard 70.

B. All outlets within the Space shall be marked and coded for ease of wire tracing; outlets shall be circuited separately from lighting. All floor outlets shall be flush with the plane of the finished floor. Outlet cover colors shall be coordinated with partition finish selections.

C. The Lessor shall in all cases safely conceal outlets and associated wiring (for electricity, voice, and data) to the workstation(s) in partitions, ceiling plenums, in recessed floor ducts, under raised flooring, or by use of a method acceptable to the Government.

5.15 TELECOMMUNICATIONS: DISTRIBUTION AND EQUIPMENT (JUN 2012)

Telecommunications floor or wall outlets shall be provided as part of the TIs. At a minimum, each outlet shall house one 4-pair wire jack for voice and one 4-pair wire jack for data. The Lessor shall ensure that all outlets and associated wiring, copper, coaxial cable, optical fiber, or other transmission medium used to transmit telecommunications (voice, data, video, Internet, or other emerging technologies) service to the workstation shall be safely concealed under raised floors, in floor ducts, walls, columns, or molding. All outlets/junction boxes shall be provided with rings and pull strings to facilitate the installation of cable. Some transmission medium may require special conduit, inner duct, or shielding as specified by the Government.

5.16 TELECOMMUNICATIONS: LOCAL EXCHANGE ACCESS (AUG 2008)

Provide sealed conduit to house the agency telecommunications system when required.

5.17 DATA DISTRIBUTION (JUN 2012)

The Lessor shall be responsible for the cost of purchasing and installing data cable. The Lessor shall safely conceal data outlets and the associated wiring used to transmit data to workstations in floor ducts, walls, columns, or below access flooring. The Lessor shall provide as part of the TI, outlets with rings and pull strings to facilitate the installation of the data cable. When cable consists of multiple runs, the Lessor shall provide ladder type or other acceptable cable trays to prevent Government-provided cable coming into contact with suspended ceilings or sprinkler piping. Cable trays shall form a loop around the perimeter of the Space such that they are within a 30-foot horizontal distance of any single drop.

5.18 ELECTRICAL, TELEPHONE, DATA FOR SYSTEMS FURNITURE (JUN 2012)

A. The Lessor shall provide as part of the TIs separate data, telephone, and electric junction boxes for the base feed connections to Government provided modular or systems furniture, when such feeds are supplied via wall outlets or floor penetrations. When overhead feeds are used, junction boxes shall be installed for electrical connections. Raceways shall be provided throughout the furniture panels to distribute the electrical, telephone, and data cable. The Lessor shall provide all electrical service wiring and connections to the furniture at designated junction points. Each electrical junction shall contain an 8-wire feed consisting of 3 general purpose 120-V circuits with 1 neutral and 1 ground wire, and a 120-V isolated ground circuit with 1 neutral and 1 isolated ground wire. A 20-ampere circuit shall have no more than 8 general purpose receptacles or 4 isolated ground "computer" receptacles.

B. The Government shall be responsible for the cost of purchasing data and telecommunications cable. Said cable shall be installed and connected to systems furniture by the Lessor/contractor with the assistance and/or advice of the Government or computer vendor. The Lessor shall provide wall mounted data and telephone junction boxes, which shall include rings and pull strings to facilitate the installation of the data and telecommunications cable. When cable consists of multiple runs, the Lessor shall provide ladder-type or other acceptable cable trays to prevent Government provided cable coming into contact with suspended ceilings or sprinkler piping. Cable trays shall form a loop around the perimeter of the Space such that they are within a 30-foot horizontal distance of any single drop. Said cable trays shall provide access to both telecommunications data closets and telephone closets.

C. The Lessor shall furnish and install suitably sized junction boxes near the "feeding points" of the furniture panels. All "feeding points" shall be shown on Government approved design intent drawings. The Lessor shall temporarily cap off the wiring in the junction boxes until the furniture is installed. The Lessor shall make all connections in the power panel and shall keep the circuit breakers off. The Lessor shall identify each circuit with the breaker number and shall identify the computer hardware to be connected to it. The Lessor shall identify each breaker at the panel and identify the devices that it serves.

D. The Lessor's electrical contractor must connect power poles or base feeds in the junction boxes to the furniture electrical system and test all pre-wired receptacles in the systems furniture. Other Government contractors will be installing the data cable in the furniture panels for the terminal and printer locations, installing the connectors on the terminal/printer ends of the cable, and continuity testing each cable. Work shall be coordinated and performed in conjunction with the furniture, telephone, and data cable installers. Much of this work may occur over a weekend on a schedule that requires flexibility and on-call visits. The Lessor must coordinate the application of Certification of Occupancy with furniture installation.

5.19 LIGHTING: INTERIOR AND PARKING – TI (SEP 2015)

A. FIXTURES: Once the design intent drawings are approved, the Lessor shall design and provide interior lighting to comply with requirements under the paragraph, "Lighting: Interior and Parking – Shell." Any additional lighting fixtures and/or components required beyond what would have been provided for an open office plan (shell) are part of the TIs.

B. PENDANT STYLE FIXTURES: If pendant style lighting fixtures are used, the increase between the number of fixtures required in the Building shell and the Space layout is part of the TIs.

C. MIXED FIXTURES: DIDs, if applicable, may require a mixed use of recessed or pendant style fixtures in the Space.

D. BUILDING PERIMETER: There may be additional requirements for lighting in exterior parking areas, vehicle driveways, pedestrian walkways, and Building perimeter in the Security Requirements attached to this Lease.

SECTION 6 UTILITIES, SERVICES, AND OBLIGATIONS DURING THE LEASE TERM

6.01 PROVISION OF SERVICES, ACCESS, AND NORMAL HOURS (JUN 2012)

A. The Government's normal hours of operations are established as **7:00** AM to **6:00** PM, Monday through Friday, with the exception of Federal holidays. Services, maintenance, and utilities shall be provided during these hours. The Government shall have access to the Premises and its Appurtenant Areas at all times without additional payment, including the use, during other than normal hours, of necessary services and utilities such as elevators, restrooms, lights, and electric power. Cleaning shall be performed during normal hours.

B. The Lessor and the Lessor's representatives, employees and contractors shall demonstrate a cooperative, positive, welcoming, respectful, professional and business-like demeanor and shall present a neat, clean, job-appropriate (professional) appearance.

6.02 UTILITIES (APR 2011)

The Lessor is responsible for providing all utilities necessary for base Building and tenant operations as part of the rental consideration.

6.03 ~~UTILITIES SEPARATE FROM RENTAL/BUILDING OPERATING PLAN (AUG 2011)~~ INTENTIONALLY DELETED

6.04 UTILITY CONSUMPTION REPORTING (SEP 2015)

Upon the effective date of the Lease, only for leases over 10,000 RSF, the Lessor shall provide regular quarterly reports for the amount of utilities (including water) consumed at the Building broken down by utility type per month for the duration of the Lease. Lessors shall report this utility consumption data within 45 calendar days of the end of each calendar quarter. Data reported includes, but is not limited to, the number of actual units consumed, by utility type per month, and associated start and end date(s) for that consumption.

(Refer to the following link for reporting guidance: www.gsa.gov/ucr)

6.05 HEATING AND AIR CONDITIONING (SEP 2014)

A. In all office areas, temperatures shall conform to local commercial equivalent temperature levels and operating practices in order to maximize tenant satisfaction. These temperatures shall be maintained throughout the leased Premises and service areas, regardless of outside temperatures, during the hours of operation specified in the Lease. The Lessor shall perform any necessary systems start-up required to meet the commercially equivalent temperature levels prior to the first hour of each day's operation. At all times, humidity shall be maintained below 60% relative humidity.

B. During non working hours, heating temperatures shall be set no higher than 55° Fahrenheit, and air conditioning shall not be provided except as necessary to return Space temperatures to a suitable level for the beginning of working hours. Thermostats shall be secured from manual operation by key or locked cage. A key shall be provided to the Government's designated representative.

C. Thermal comfort. During all working hours, comply with the latest edition of ASHRAE Standard 55, Thermal Comfort Conditions for Human Occupancy.

D. Warehouse or garage areas require heating and ventilation only. Cooling of this Space is not required. Temperature of warehouse or garage areas shall be maintained at a minimum of 50° Fahrenheit.

E. The Lessor shall conduct HVAC system balancing after any HVAC system alterations during the term of the Lease and shall make a reasonable attempt to schedule major construction outside of office hours.

F. Normal HVAC systems' maintenance shall not disrupt tenant operations.

G. The existing HVAC system used for purposes of cooling the designated server room 24 hrs a day, 365 days a year is acceptable to the Government.

6.06 OVERTIME HVAC USAGE (JUN 2012)

A. If there is to be a charge for heating or cooling outside of the Building's normal hours, such services shall be provided at the hourly rates set forth elsewhere in the Lease. Overtime usage services may be ordered by the Government's authorized representative only.

B. When the cost of service is $3,000 or less, the service may be ordered orally. An invoice shall be submitted to the official placing the order for certification and payment. Orders for services costing more than $3,000 shall be placed using GSA Form 300, Order for Supplies or Services, or other approved service requisition procurement document. An invoice conforming to the requirements of this Lease shall be submitted to the official placing the order for certification and payment.

C. Failure to submit a proper invoice within 120 days of providing overtime utilities shall constitute a waiver of the Lessor's right to receive any payment for such overtime utilities pursuant to this Lease.

6.07 JANITORIAL SERVICES (JUN 2012)

The Lessor shall maintain the Premises and all areas of the Property to which the Government has routine access in a clean condition and shall provide supplies and equipment for the term of the Lease. The following schedule describes the level of services intended. Performance will be based on the LCO's evaluation of results, not the frequency or method of performance.

A. Daily. Empty trash receptacles. Sweep entrances, lobbies, and corridors. Spot sweep floors, and spot vacuum carpets. Clean drinking fountains. Sweep and damp mop or scrub restrooms. Clean all restroom fixtures, and replenish restroom supplies. Dispose of all trash and garbage generated in or about the Building. Wash inside and out or steam clean cans used for collection of food remnants from snack bars and vending machines. Dust horizontal surfaces that are readily available and visibly require dusting. Spray buff resilient floors in main corridors, entrances, and lobbies. Clean elevators and escalators. Remove carpet stains. Police sidewalks, parking areas, and driveways. Sweep loading dock areas and platforms. Clean glass entry doors to the Space.

B. Three times a week. Sweep or vacuum stairs.

C. Weekly. Damp mop and spray buff all resilient floors in restrooms and health units. Sweep sidewalks, parking areas, and driveways (weather permitting).

D. Every two weeks. Spray buff resilient floors in secondary corridors, entrance, and lobbies. Damp mop and spray buff hard and resilient floors in office Space.

E. Monthly. Thoroughly dust furniture. Completely sweep and/or vacuum carpets. Sweep storage Space. Spot clean all wall surfaces within 70 inches of the floor.

F. Every two months. Damp wipe restroom wastepaper receptacles, stall partitions, doors, window sills, and frames. Shampoo entrance and elevator carpets.

G. Three times a year. Dust wall surfaces within 70 inches of the floor, vertical surfaces and under surfaces. Clean metal and marble surfaces in lobbies. Wet mop or scrub garages.

H. Twice a year. Wash all interior and exterior windows and other glass surfaces. Strip and apply four coats of finish to resilient floors in restrooms. Strip and refinish main corridors and other heavy traffic areas.

I. Annually. Wash all venetian blinds, and dust 6 months from washing. Vacuum or dust all surfaces in the Building more than 70 inches from the floor, including light fixtures. Vacuum all draperies in place. Strip and refinish floors in offices and secondary lobbies and corridors. Shampoo carpets in corridors and lobbies. Clean balconies, ledges, courts, areaways, and flat roofs.

J. Every two years. Shampoo carpets in all offices and other non-public areas.

K. Every five years. Dry clean or wash (as appropriate) all draperies.

L. As required. Properly maintain plants and lawns. Provide initial supply, installation, and replacement of light bulbs, tubes, ballasts, and starters. Provide and empty exterior ash cans and clean area of any discarded cigarette butts.

M. Pest control. Control pests as appropriate, using Integrated Pest Management techniques, as specified in the GSA Environmental Management Integrated Pest Management Technique Guide (E402-1001).

6.08 SELECTION OF CLEANING PRODUCTS (APR 2015)

The Lessor shall use cleaning products (including general purpose cleaners, floor cleaners, hand soap, etc.) that comply with either the Green Seal standard, the UL/EcoLogo standard, EPA's Design for the Environment (DfE) designation, or a substitute acceptable to the LCO. Hand soap products shall also be USDA Certified BioPreferred.

6.09 SELECTION OF PAPER PRODUCTS (APR 2015)

The Lessor shall select paper and paper products (e.g., restroom tissue and paper towels) conforming to the Green Seal Standard (GS-1), or a substitute acceptable to the LCO.

6.10 SNOW REMOVAL (APR 2011)

Lessor shall provide snow removal services for the Government on all days for which this Lease has designated normal hours. Lessor shall clear parking lots, sidewalks, walkways and other entrances of snow and ice. The snow removal shall take place no later than 6:00 AM, without exception. Should accumulation continue throughout the day, the Lessor shall provide such additional snow removal services to prevent accumulation. In addition to snow removal, the Lessor shall keep walkways, sidewalks and parking lots free of ice during the normal hours. The Lessor shall remove excess buildup of sand and/or ice melt to minimize slipping hazards. If the Building entrance(s) has a northern exposure, then Lessor shall take additional measures to protect the safety of pedestrians.

6.11 MAINTENANCE AND TESTING OF SYSTEMS (SEP 2013)

A. The Lessor is responsible for the total maintenance and repair of the leased Premises. Such maintenance and repairs include the site and private access roads. All equipment and systems shall be maintained to provide reliable, energy efficient service without unusual interruption, disturbing noises, exposure to fire or safety hazards, uncomfortable drafts, excessive air velocities, or unusual emissions of dirt. The Lessor's maintenance responsibility includes initial supply and replacement of all supplies, materials, and equipment necessary for such maintenance. Maintenance, testing, and inspection of appropriate equipment and systems shall be done in accordance with current applicable codes, and inspection certificates shall be displayed as appropriate. Copies of all records in this regard shall be forwarded to the Government's designated representative.

B. At the Lessor's expense, the Government reserves the right to require documentation of proper operations, inspection, testing, and maintenance of fire protection systems, such as, but not limited to, fire alarm, fire sprinkler, standpipes, fire pump, emergency lighting, illuminated exit signs, emergency generator, prior to occupancy to ensure proper operation. These tests shall be witnessed by the Government's designated representative.

6.12 MAINTENANCE OF PROVIDED FINISHES (SEP 2013)

A. Paint, wall coverings. Lessor shall maintain all wall coverings and high performance paint coatings in "like new" condition for the life of the Lease. All painted surfaces shall be repainted at the Lessor's expense, including the moving and returning of furnishings, any time during the occupancy by the Government if the paint is peeling or permanently stained, except where damaged due to the negligence of the Government. All work shall be done after normal working hours as defined elsewhere in this Lease. In addition to the foregoing requirement,

1. Lessor shall repaint common areas at least every three years.

2. Lessor shall perform cyclical repainting of the Space every **five (5)** years of occupancy. This cost, including the moving and returning of furnishings, as well as disassembly and reassembly of systems furniture per manufacturer's warranty, shall be at the Lessor's expense.

B. Carpet and flooring.

1. Except when damaged by the Government, the Lessor shall repair or replace flooring at any time during the Lease term when:

   a. Backing or underlayment is exposed;

   b. There are noticeable variations in surface color or texture;

   c. It has curls, upturned edges, or other noticeable variations in texture;

   d. Tiles are loose; or,

   e. Tears or tripping hazards are present.

2. Notwithstanding the foregoing, as part of the rental consideration, the Lessor shall replace all carpet in the Space every **five (5)** years, with a product which meets the requirements in the "Floor Coverings and Perimeters" paragraph in this Lease.

3. Repair or replacement shall include the moving and returning of furnishings, including disassembly and reassembly of systems furniture per manufacturer's warranty, if necessary. Work shall be performed after the normal hours established elsewhere in this Lease.

6.13 ASBESTOS ABATEMENT (APR 2011)

If asbestos abatement work is to be performed in the Space after occupancy, the Lessor shall submit to the Government the occupant safety plan and a description of the methods of abatement and re-occupancy clearance, in accordance with OSHA, EPA, DOT, state, and local regulations and guidance, at least 4 weeks prior to the abatement work.

6.14 ONSITE LESSOR MANAGEMENT (APR 2011)

The Lessor shall provide an onsite Building superintendent or a locally designated representative available to promptly respond to deficiencies, and immediately address all emergency situations.

6.15 IDENTITY VERIFICATION OF PERSONNEL (SEP 2013)

A. The Government reserves the right to verify identities of personnel with routine pre-occupancy and/or unaccompanied access to Government space. The Lessor shall comply with the agency personal identity verification procedures below that implement Homeland Security Presidential Directive-12 (HSPD-12), Office of Management and Budget (OMB) guidance M-05-24 and M11-11, and Federal Information Processing Standards Publication (FIPS PUB) Number 201, as amended.

B. The Government reserves the right to conduct additional background checks on Lessor personnel and contractors with routine access to Government leased space throughout the term of the lease.

C. Upon request, the Lessor will notify the Government whether they will use either the manual process and submit completed fingerprint charts and background investigation forms, or use the electronic process of ID verification, completed through the e-QIP system. This would be done for each employee of the Lessor, as well as employees of the Lessor's contractors or subcontractors who will provide building operating services

requiring routine access to the Government's leased space for a period greater than 6 months. The Government may also require this information for the Lessor's employees, contractors, or subcontractors who will be engaged to perform alterations or emergency repairs in the Government's space.

1. MANUAL PROCESS: The Lessor shall provide Form FD 258, Fingerprint Chart (available from the Government Printing Office at http://bookstore.gpo.gov), and Standard Form 85P, Questionnaire for Public Trust Positions, completed by each person and returned to the Lease Contracting Officer (or the contracting officer's designated representative) within 30 days from receipt of the forms.

2. ELECTRONIC PROCESS: The electronic process will be done through the e-QIP system. The Lessor's contractor/personnel will receive an email along with instructions for completing the Office of Personnel Electronic Questionnaire (e-QIP). The contractor/personnel will have up to (7) seven business days to login and complete the e-QIP for the background investigation. The contractor/personnel will be instructed to access the website, and receive on screen instructions which include but it is not limited to:

a) How to Log In

b) How to Answer and Create New Golden Questions

c) What Additional Documents to Send

d) To Print and Sign two Signature Forms (Certification That My Answers Are True)

e) To complete the submission process, press the "Release /Request Transmit to the Agency" and exit the process

f) Where to Send.

The Lessor must ensure prompt input, and timely receipt of the following, from their contractor/personnel:

a) Two FBI Fingerprint Cards (Form FD-258) or one card produced by a livescan device,

b) Certification That My Answers Are True

c) Authorization for Release of Information.

D. The Lessor must ensure the contracting officer (or the contracting officer's designated representative) has all of the requested documentation to ensure the completion of the investigation.

E. Based on the information furnished, the Government will conduct background investigations of the employees. The contracting officer will advise the Lessor in writing if an employee fails the investigation, and, effective immediately, the employee will no longer be allowed to work or be assigned to work in the Government's space.

F. Throughout the life of the lease, the Lessor shall provide the same data for any new employees, contractors, or subcontractors who will be assigned to the Government's space. In the event the Lessor's contractor or subcontractor is subsequently replaced, the new contractor or subcontractor is not required to submit another set of these forms for employees who were cleared through this process while employed by the former contractor or subcontractor. The Lessor shall resubmit Form FD 258 and Standard Form 85P for every employee covered by this paragraph on a 5 year basis.

G. The Lessor shall insert this paragraph in all subcontracts when the subcontractor is required to have physical access to a federally controlled facility or access to a federal information system.

6.16 SCHEDULE OF PERIODIC SERVICES (JUN 2012)

Within 60 days after occupancy by the Government, the Lessor shall provide the LCO with a detailed written schedule of all periodic services and maintenance to be performed other than daily, weekly, or monthly.

6.17 LANDSCAPING (SEP 2015)

A. Landscape management practices shall prevent pollution by:

1. Employing practices which avoid or minimize the need for fertilizers and pesticides;

2. Prohibiting the use of the 2,4-Dichlorophenoxyacetic Acid (2,4-D) herbicide and organophosphates; and

3. Composting/recycling all yard waste.

B. The Lessor shall use landscaping products with recycled content as required by EPA's CPG for landscaping products. Refer to EPA's CPG web site, www.epa.gov/cpg.

C. INTENTIONALLY DELETED

6.18 LANDSCAPE MAINTENANCE (APR 2011)

Landscape maintenance shall be performed during the growing season at not less than a weekly cycle and shall consist of watering, weeding, mowing, and policing the area to keep it free of debris. Pruning and fertilization shall be done on an as-needed basis. In addition, dead, dying, or damaged plants shall be replaced.

6.19 RECYCLING (JUN 2012)

A. For Leases greater than 10,000 rentable SF, with a Lease term greater than six months, the Lessor shall establish a recycling program for (at a minimum) paper, corrugated cardboard, glass, plastics, and metals where local markets for recovered materials exist.

B. Where state or local law, code, or ordinance requires recycling programs for the Premises, Lessor shall comply with such state and/or local law, code, or ordinance.

C. When implementing any recycling program, the Lessor shall provide an easily accessible, appropriately sized area (2 SF per 1,000 SF of Building gross floor area) that serves the Space for the collection and storage of materials for recycling. Telecom rooms are not acceptable as recycling space. During the Lease term, the Lessor agrees, upon request, to provide the Government with additional information concerning recycling programs maintained in the Building and in the Space.

6.20 RANDOLPH-SHEPPARD COMPLIANCE (SEP 2013)

During the term of the Lease, the Lessor may not establish vending facilities within the leased Space that will compete with any Randolph-Sheppard vending facilities.

6.21 ~~SAFEGUARDING AND DISSEMINATION OF SENSITIVE BUT UNCLASSIFIED (SBU) BUILDING INFORMATION (SEP 2013)~~ INTENTIONALLY DELETED

6.22 INDOOR AIR QUALITY (SEP 2013)

A. The Lessor shall control contaminants at the source and/or operate the Space in such a manner that the GSA indicator levels for carbon monoxide (CO), carbon dioxide (CO2), and formaldehyde (HCHO) are not exceeded. The indicator levels for office areas shall be: CO 9 ppm time weighted average (TWA 8 hour sample); CO2 1,000 ppm (TWA); HCHO 0.1 ppm (TWA).

B. The Lessor shall make a reasonable attempt to apply insecticides, paints, glues, adhesives, and HVAC system cleaning compounds with highly volatile or irritating organic compounds, outside of working hours. Except in an emergency, the Lessor shall provide at least 72 hours advance notice to the Government before applying noxious chemicals in occupied Spaces and shall adequately ventilate those Spaces during and after application.

C. The Lessor shall promptly investigate indoor air quality (IAQ) complaints and shall implement the necessary controls to address the complaint.

D. The Government reserves the right to conduct independent IAQ assessments and detailed studies in Space that it occupies, as well as in space serving the Space (e.g., common use areas, mechanical rooms, HVAC systems, etc.). The Lessor shall assist the Government in its assessments and detailed studies by:

1. Making available information on Building operations and Lessor activities;
2. Providing access to Space for assessment and testing, if required; and
3. Implementing corrective measures required by the LCO.

E. The Lessor shall provide to the Government material safety data sheets (MSDS) upon request for the following products prior to their use during the term of the Lease: adhesives, caulking, sealants, insulating materials, fireproofing or firestopping materials, paints, carpets, floor and wall patching or leveling materials, lubricants, clear finish for wood surfaces, janitorial cleaning products, pesticides, rodenticides, and herbicides. The Government reserves the right to review such products used by the Lessor within:

1. The Space;
2. Common Building areas;
3. Ventilation systems and zones serving the Space; and
4. The area above suspended ceilings and engineering space in the same ventilation zone as the Space.

F. Where hazardous gasses or chemicals (any products with data in the Health and Safety section of the MSDS sheets) may be present or used, including large-scale copying and printing rooms, segregate areas with deck-to-deck partitions with separate outside exhausting at a rate of at least 0.5 cubic feet per minute per SF, no air recirculation. The mechanical system must operate at a negative pressure compared with the surrounding spaces of at least an average of 5 Pa (pascal) (0.02 inches of water gauge) and with a minimum of 1 Pa (0.004 inches of water gauge) when the doors to the rooms are closed.

6.23 RADON IN AIR (SEP 2013)

A. The radon concentration in the air of the Space shall be less than 4 picoCuries per liter (pCi/L) for childcare and 25 pCi/L for all other space, herein called "GSA action levels."

B. INITIAL TESTING:

1. The Lessor shall:

a. Test for radon that portion of Space planned for occupancy by the Government in ground contact or closest to the ground up to and including the second floor above grade (Space on the third or higher floor above grade need not be measured);.

b. Report the results to the LCO upon award; and

c. Promptly carry out a corrective action program for any radon concentration which equals or exceeds the GSA action levels.

2. Testing sequence. The Lessor shall measure radon by the standard test in sub-paragraph D.1, completing the test not later than 150 days after award, unless the LCO decides that there is not enough time to complete the test before Government occupancy, in which case the Lessor shall perform the short test in sub-paragraph D.2.

3. If the Space offered for Lease to the Government is in a Building under construction or proposed for construction, the Lessor, if possible, shall perform the standard test during buildout before Government occupancy of the Space. If the LCO decides that it is not possible to complete the standard test before occupancy, the Lessor shall complete the short test before occupancy and the standard test not later than 150 days after occupancy.

C. CORRECTIVE ACTION PROGRAM:

1. Program Initiation and Procedures.

a. If either the Government or the Lessor detects radon at or above the GSA action levels at any time before Government occupancy, the Lessor shall carry out a corrective action program which reduces the concentration to below the GSA action levels before Government occupancy.

b. If either the Government or the Lessor detects a radon concentration at or above the GSA action levels at any time after Government occupancy, the Lessor shall promptly carry out a corrective action program which reduces the concentration to below the GSA action levels.

c. If either the Government or the Lessor detects a radon concentration at or above the GSA action levels at any time after Government occupancy, the Lessor shall promptly restrict the use of the affected area and shall provide comparable temporary space for the tenants, as agreed to by the Government, until the Lessor carries out a prompt corrective action program which reduces the concentration to below the GSA action levels and certifies the Space for re-occupancy.

d. The Lessor shall provide the Government with prior written notice of any proposed corrective action or tenant relocation. The Lessor shall promptly revise the corrective action program upon any change in Building condition or operation which would affect the program or increase the radon concentration to or above the GSA action levels.

2. The Lessor shall perform the standard test in sub-paragraph D.1 to assess the effectiveness of a corrective action program. The Lessor may also perform the short test in sub-paragraph D.2 to determine whether the Space may be occupied but shall begin the standard test concurrently with the short test.

3. All measures to accommodate delay of occupancy, corrective action, tenant relocation, tenant re-occupancy, or follow-up measurement, shall be provided by the Lessor at no additional cost to the Government.

4. If the Lessor fails to exercise due diligence, or is otherwise unable to reduce the radon concentration promptly to below the GSA action levels, the Government may implement a corrective action program and deduct its costs from the rent.

D. TESTING PROCEDURES:

1. Standard Test. Place alpha track detectors throughout the required area for 91 or more days so that each covers no more than 2,000 ABOA SF. Use only devices listed in the EPA Radon Measurement Proficiency Program (RMP) application device checklists. Use a laboratory rated proficient in the EPA RMP to analyze the devices. Submit the results and supporting data (sample location, device type, duration, radon measurements, laboratory proficiency certification number, and the signature of a responsible laboratory official) within 30 days after the measurement.

2. Short Test. Place alpha track detectors for at least 14 days, or charcoal canisters for 2 days to 3 days, throughout the required area so that each covers no more than 2,000 ABOA SF, starting not later than 7 days after award. Use only devices listed in the EPA RMP application device checklists. Use a laboratory rated proficient in the EPA RMP to analyze the devices. Submit the results and supporting data within 30 days after the measurement. In addition, complete the standard test not later than 150 days after Government occupancy.

6.24 ~~RADON IN WATER (JUN 2012)~~ INTENTIONALLY DELETED

6.25 HAZARDOUS MATERIALS (SEP 2013)

A. The leased Space shall be free of hazardous materials, hazardous substances, and hazardous wastes, as defined by and according to applicable Federal, state, and local environmental regulations. Should there be reason to suspect otherwise, the Government reserves the right, at Lessor's expense, to require documentation or testing to confirm that the Space is free of all hazardous materials.

B. Lessor shall, to the extent of its knowledge, notify Government of the introduction of any hazardous materials onto the Property by Lessor or others, including but not limited to, co-tenants occupying Space in the Building.

6.26 MOLD (SEP 2013)

A. Actionable mold is mold of types and concentrations in excess of that found in the local outdoor air.

B. The Lessor shall provide Space to the Government that is free from actionable mold and free from any conditions that reasonably can be anticipated to permit the growth of actionable mold or are indicative of the possibility that actionable mold will be present (indicators).

C. At such times as the Government may direct, including but not limited to: after a flood, water damage not caused by the Government, or repairs caused by the Lessor, the Lessor, at its sole cost, expense and risk shall: (i) cause an industrial hygienist certified by the American Board of Industrial Hygienists or a qualified consultant (the Inspector) who, in either instance, is reasonably acceptable to the Government, to inspect and evaluate the Space for the presence of actionable mold or mold indicators; and (ii) cause the Inspector to deliver the results of its inspection and evaluation (the Report) to the Government within 30 days after it conducts same and, in all events, at the same time that it delivers the Report to Lessor. With the delivery of the Report to the Government, the Inspector shall notify the Government, in writing via cover letter to the report, if the Inspector discovers or suspects the existence of actionable mold or indicators in the leased Space.

D. The presence of actionable mold in the Premises may be treated as a Casualty, as determined by the Government, in accordance with the Fire and Other Casualty clause contained in the General Clauses of this Lease. In addition to the provisions of the Fire and Other Casualty clause of this Lease, should a portion of the Premises be determined by the Government to be un-tenantable due to an act of negligence by the Lessor or his agents, the Lessor shall provide reasonably acceptable alternative Space at the Lessor's expense, including the cost of moving, and any required alterations.

E. If the Report indicates that actionable mold or indicators are present in the leased Space, the Lessor, at its sole cost, expense, and risk, shall within 30 days after its receipt of the Report: (1) retain an experienced mold remediation contractor reasonably acceptable to the Government to prepare and submit to the Government and Lessor a remediation plan (the Plan) and within 90 days after the Government's approval of the Plan, remediate the actionable mold or the indicators in the leased Space, but prior to commencing such remediation, Lessor shall send the Government a notice stating: (i) the date on which the actionable mold remediation shall start and how long it is projected to continue; (ii) which portion of the leased Space shall be subject to the remediation; and (iii) the remediation procedures and standards to be used to implement the Plan and the clearance criteria to be employed at the conclusion of the remediation; and (2) notify, in accordance with any applicable Federal, state, and local health and safety requirements, the Government employees as well as all other occupants of and visitors to the leased Space of the nature, location and schedule for the planned remediation and reasons therefore.

F. The Lessor shall be responsible for conducting the remediation in accordance with the relevant provisions of the document entitled "Mold Remediation in Schools and Commercial Buildings" (EPA 402-K-01-001, March 2001), published by the U.S. Environmental Protection Agency, as same may be amended or revised from time to time, and any other applicable Federal, state, or local laws, regulatory standards and guidelines.

G. The Lessor acknowledges and agrees that the Government shall have a reasonable opportunity to inspect the leased Space after conclusion of the remediation. If the results of the Government's inspection indicate that the remediation does not comply with the Plan or any other applicable Federal, state, or local laws, regulatory standards or guidelines, the Lessor, at its sole cost, expense, and risk, shall immediately take all further actions necessary to bring the remediation into compliance.

H. If the Lessor fails to exercise due diligence, or is otherwise unable to remediate the actionable mold, the Government may implement a corrective action program and deduct its costs from the rent.

6.27 OCCUPANT EMERGENCY PLANS (SEP 2013)

The Lessor is required to cooperate, participate and comply with the development and implementation of the Government's Occupant Emergency Plan (OEP) and if necessary, a supplemental Shelter-in Place (SIP) Plan. Periodically, the Government may request that the Lessor assist in reviewing and revising its OEP and SIP. The Plan, among other things, must include an annual emergency evacuation drill, emergency notification procedures for the Lessor's Building engineer or manager, Building security, local emergency personnel, and Government agency personnel.

6.28 ~~FLAG DISPLAY (SEP 2013)~~ INTENTIONALLY DELETED

SECTION 7 ADDITIONAL TERMS AND CONDITIONS

7.01 SECURITY STANDARDS (JUN 2012)

The Lessor agrees to the requirements of Security Level **II** attached to this Lease.

7.02 MODIFIED PARAGRAPHS

The following paragraphs have been modified in this Lease:

A. 3.08 ADHESIVES AND SEALANTS (AUG 2008)

B. 3.12 VESTIBULES (APR 2011)

C. 3.26 PARTITIONS: GENERAL (APR 2015)

D. 3.29 WALL FINISHES – shell (sep 2015)

E. 5.10 WALL FINISHES (JUN 2012)

F. 5.17 DATA DISTRIBUTION (JUNE 2012)

G. 6.05 HEATING AND AIR CONDITIONING (SEP 2014)

H. 6.10 SNOW REMOVAL (APR 2011)

7.03 CONSTRUCTION DURING NON-WORKING HOURS

Lessor shall complete the required construction during non-working hours to minimize disruption to the Government.

Legal Description

COM AT NE COR OF SEC 9 TH S 1160.56 FT TO POB, S 150 FT W 545 FT, N 150 FT, E545 TO POB SEC 9-21-9 CITY OF CADILLAC.

Initials: Lessor _____ & Govt _____

(b) (5)

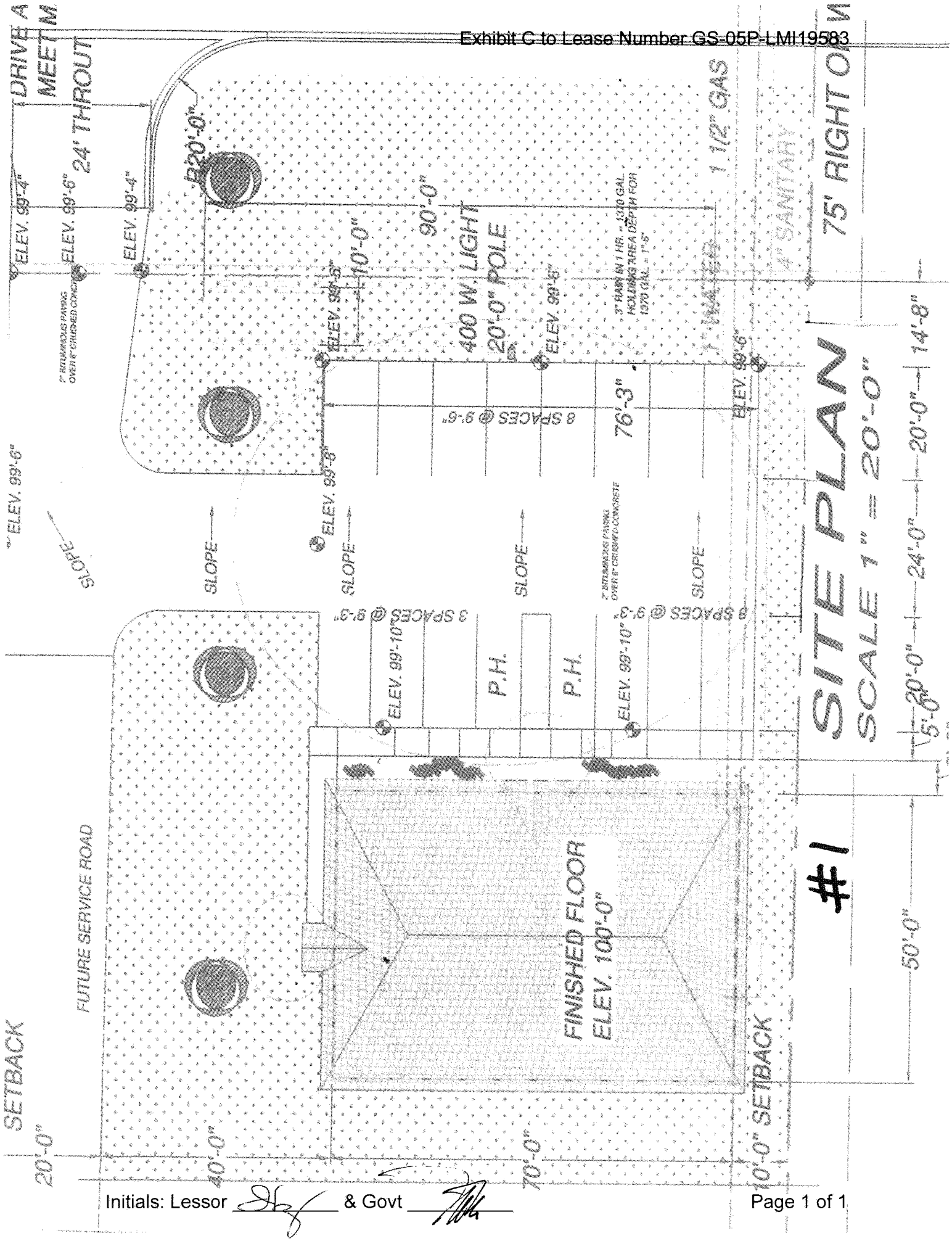
#1 SITE PLAN
SCALE 1" = 20'-0"
DRIVE A
MEET M
24' THROUT
75' RIGHT OF W
1 1/2" GAS
4" SANITARY
1" WATER
ELEV. 99'-4"
ELEV. 99'-6"
ELEV. 99'-4"
R20'-0"
90'-0"
10'-0"
400 W. LIGHT
20'-0" POLE
ELEV. 99'-6"
ELEV. 99'-6"
3" RAIN IN 1 HR. = 1370 GAL.
HOLDING AREA DEPTH FOR
1370 GAL. = 1'-6"
2" BITUMINOUS PAVING
OVER 6" CRUSHED CONC.
8 SPACES @ 9'-6"
76'-3"
ELEV. 99'-6"
14'-8"
20'-0"
24'-0"
20'-0"
5'-0"
ELEV. 99'-6"
ELEV. 99'-8"
SLOPE
SLOPE
SLOPE
SLOPE
SLOPE
2" BITUMINOUS PAVING
OVER 6" CRUSHED CONCRETE
3 SPACES @ 9'-3"
8 SPACES @ 9'-3"
ELEV. 99'-10"
ELEV. 99'-10"
P.H.
P.H.
FINISHED FLOOR
ELEV. 100'-0"
FUTURE SERVICE ROAD
50'-0"
SETBACK
SETBACK
20'-0"
40'-0"
70'-0"
10'-0"

SECURITY REQUIREMENTS - FACILITY SECURITY LEVEL II

THESE PARAGRAPHS CONTAIN ADDITIONAL SECURITY REQUIREMENTS, AND, UNLESS INDICATED OTHERWISE, ARE TO BE PRICED AS PART OF THE BUILDING SPECIFIC AMORTIZED CAPITAL (BSAC). WHERE THEY ARE IN CONFLICT WITH ANY OTHER REQUIREMENTS ON THIS LEASE, THE STRICTEST SHALL APPLY.

DEFINITIONS:

CRITICAL AREAS - The areas that house systems that if damaged or compromised could have significant adverse consequences for the facility, operation of the facility, or mission of the agency or its occupants and visitors. These areas may also be referred to as "limited access areas," "restricted areas," or "exclusionary zones." Critical areas do not necessarily have to be within Government-controlled space (e.g., generators, air handlers, electrical feeds which could be located outside Government-controlled space).

SENSITIVE AREAS – Sensitive areas include vaults, SCIFs, evidence rooms, war rooms, and sensitive documents areas. Sensitive areas are primarily housed within Government-controlled space.

FACILITY ENTRANCES, LOBBY, COMMON AREAS, NON-PUBLIC, AND UTILITY AREAS.

FACILITY ENTRANCES AND LOBBY

EMPLOYEE ACCESS CONTROL AT ENTRANCES (SHELL)

The Lessor shall provide key or electronic access control for the entrance to this building. All Government employees, under this lease, shall be allowed access to the leased space (including after-hours access).

COMMON AREAS, NON-PUBLIC, AND UTILITY AREAS.

PUBLIC RESTROOM ACCESS (SHELL)

The Government reserves the right to control access to public restrooms located within the Space.

SECURING CRITICAL AREAS (SHELL)
The Lessor shall secure areas designated as Critical Areas to restrict access:

A. Keyed locks, keycards, or similar security measures shall strictly control access to mechanical areas. Additional controls for access to keys, keycards, and key codes shall be strictly maintained. The Lessor shall develop and maintain accurate HVAC diagrams and HVAC system labeling within mechanical areas.

B. Roofs with HVAC systems shall also be secured. Fencing or other barriers may be required to restrict access from adjacent roofs based on a Government Building Security Assessment. Roof access shall be strictly controlled through keyed locks, keycards, or similar measures. Fire and life safety egress shall be carefully reviewed when restricting roof access.

C. At a minimum, Lessor shall secure building common areas including sprinkler rooms, electrical closets, telecommunications rooms.

VISITOR ACCESS CONTROL (SHELL)
Entrances are open to the public during business hours. After hours, visitor entrances are secured, and have a means to verify the identity of persons requesting access prior to allowing entry into the Space.

INTERIOR (GOVERNMENT SPACE)

DESIGNATED ENTRANCES (SHELL)
The Government shall have a designated main entrance.

IDENTITY VERIFICATION (SHELL)
The Government reserves the right to verify the identity of persons requesting access to the Space prior to allowing entry.

FORMAL KEY CONTROL PROGRAM (SHELL)
The Government reserves the right to implement a formal key control program. The Lessor shall have a means of allowing the electronic disabling of lost or stolen access media, if electronic media is used.

SITES AND EXTERIOR OF THE BUILDING

SIGNAGE

POSTING OF SIGNAGE IDENTIFYING THE SPACE AS GOVERNMENTAL (SHELL)

The Lessor shall not post sign(s) or otherwise identify the facility and parking areas as a Government, or specific Government tenant, occupied facility, including during construction, without written Government approval.

POSTING OF REGULATORY SIGNAGE (SHELL)

The Government may post or request the Lessor to post regulatory, statutory, sensitive areas and site specific signage.

LANDSCAPING

LANDSCAPING REQUIREMENTS (SHELL)

Lessor shall maintain landscaping (trees, bushes, hedges, land contour, etc,) around the facility. Landscaping shall be neatly trimmed in order to minimize the opportunity for concealment of individuals and packages/containers. Landscaping shall not obstruct the views of security guards and CCTV cameras, or interfere with lighting or IDS equipment.

CRIME PREVENTION THROUGH ENVIRONMENTAL DESIGN (SHELL)

The Lessor shall separate from public access, restricted areas as designated by the Government, through the application of Crime Prevention Through Environmental Design (CPTED) principles by using trees, hedges, berms, or a combination of these or similar features, and by fences, walls, gates and other barriers, where feasible and acceptable to the Government.

HAZMAT STORAGE

If there is HAZMAT storage, Lessor shall locate it in a restricted area or storage container away from loading docks, entrances, and uncontrolled parking.

PLACEMENT OF RECEPTACLES, CONTAINERS, AND MAILBOXES

Trash receptacles, containers, mailboxes, vending machines, or other fixtures and/or features that could conceal packages, brief cases, or other portable containers shall be located 10 feet away from building.

SECURITY SYSTEMS

CLOSED CIRCUIT TELEVISION SYSTEM (CCTV)

GOVERNMENT PROVIDED PRODUCT, INSTALLATION, AND MAINTENANCE

The Government shall provide and install an entry control system, with time lapse video recording, that will allow Government employees to view and communicate remotely with visitors before allowing access. This Closed Circuit Television (CCTV) system shall provide the Government with unobstructed coverage, as determined by the Government, of designated pedestrian entrances and exits. The Lessor shall permit twenty-four hour CCTV coverage and recording, provided and operated by the Government. The Government will centrally monitor the CCTV surveillance. Government specifications are available from the Contracting Officer. The Lessor shall post necessary regulatory, statutory, and/or site specific signage, as determined by the Government.

The Lessor, at the notice to proceed stage of the procurement, shall advise the Government of the appropriate time to install the equipment during the construction of the Space The Lessor shall facilitate the installation by allowing access to electrical panels and other areas of the building as necessary.

INTRUSION DETECTION SYSTEM (IDS)

GOVERNMENT PROVIDED SCOPE AND PRODUCT, INSTALLATION, AND MAINTENANCE

The Lessor shall permit installation of a perimeter Intrusion Detection System (IDS) to be operated by the Government. The Government shall provide and install an IDS on perimeter entry and exit doors, and operable ground-floor windows. Basic Security-in-Depth IDS—include: magnetic door switch(s), alarm system keypad, passive infrared sensor(s) (PIR), an alarm panel (to designated monitoring center) and appropriate communication method i.e. telephone and/or Internet connection, glass-break detector, magnetic window switches or shock sensors.

Basic Security-in-Depth IDS shall be connected and monitored at a central station. Emergency notification lists shall be coordinated with the monitoring station to include all applicable Government and Lessor points of contact. Monitoring shall be designed to facilitate a real-time detection of an incident, and to coordinate an active response to an incident.

The Lessor, at the notice to proceed stage of the procurement, shall advise the Government of the appropriate time to install the equipment during the construction of the Space. The Lessor shall facilitate the installation by allowing access to electrical panels and other areas of the building, as necessary.

DURESS ALARM

GOVERNMENT PROVIDED SCOPE, PRODUCT, INSTALLATION, AND MAINTENANCE
The Lessor shall permit installation of a duress alarm system to be provided and operated by the Government. The Government, in coordination with a security provider, either internal or external, as determined by the Contracting Officer, shall document and implement duress procedures for emergency situations.

The Lessor, at the notice to proceed stage of the procurement, shall advise the Government of the appropriate time to install the equipment during the construction of the Space and shall facilitate the installation, including access to electrical panels and other areas of the building, as necessary.

STRUCTURE

WINDOWS
No countermeasures are required for baseline standard.

OPERATIONS AND ADMINISTRATION

LESSOR TO WORK WITH FACILITY SECURITY COMMITTEE (FSC) (SHELL)
The Lessor shall cooperate and work with the buildings Facility Security Committee (FSC) throughout the term of the lease.

ACCESS TO BUILDING INFORMATION (SHELL)
Building Information—including mechanical, electrical, vertical transport, fire and life safety, security system plans and schematics, computer automation systems, and emergency operations procedures—shall be strictly controlled. Such information shall be released to authorized personnel only, approved by the Government, by the development of an access list and controlled copy numbering. The Contracting Officer may direct that the names and locations of -Government tenants not be disclosed in any publicly accessed document or record. If that is the case, the Government may request that such information not be posted in the building directory.

Lessor shall have emergency plans and associated documents readily available in the event of an emergency.

GENERAL CLAUSES
(Acquisition of Leasehold Interests in Real Property)

CATEGORY	CLAUSE NO.	48 CFR REF.	CLAUSE TITLE
GENERAL	1		SUBLETTING AND ASSIGNMENT
	2	552.270-11	SUCCESSORS BOUND
	3	552.270-23	SUBORDINATION, NON-DISTURBANCE AND ATTORNMENT
	4	552.270-24	STATEMENT OF LEASE
	5	552.270-25	SUBSTITUTION OF TENANT AGENCY
	6	552.270-26	NO WAIVER
	7		INTEGRATED AGREEMENT
	8	552.270-28	MUTUALITY OF OBLIGATION
PERFORMANCE	9		DELIVERY AND CONDITION
	10		DEFAULT BY LESSOR
	11	552.270-19	PROGRESSIVE OCCUPANCY
	12		MAINTENANCE OF THE PROPERTY, RIGHT TO INSPECT
	13		FIRE AND CASUALTY DAMAGE
	14		COMPLIANCE WITH APPLICABLE LAW
	15	552.270-12	ALTERATIONS
	16		ACCEPTANCE OF SPACE AND CERTIFICATE OF OCCUPANCY
PAYMENT	17	52.204-7	SYSTEM FOR AWARD MANAGEMENT
	18	52.204-13	SYSTEM FOR AWARD MANAGEMENT MAINTENANCE
	19	552.270-31	PROMPT PAYMENT
	20	52.232-23	ASSIGNMENT OF CLAIMS
	21		PAYMENT
	22	52.232-33	PAYMENT BY ELECTRONIC FUNDS TRANSFER—SYSTEM FOR AWARD MANAGEMENT
STANDARDS OF CONDUCT	23	52.203-13	CONTRACTOR CODE OF BUSINESS ETHICS AND CONDUCT
	24	552.270-32	COVENANT AGAINST CONTINGENT FEES
	25	52-203-7	ANTI-KICKBACK PROCEDURES
	26	52-223-6	DRUG-FREE WORKPLACE
	27	52.203-14	DISPLAY OF HOTLINE POSTER(S)
ADJUSTMENTS	28	552.270-30	PRICE ADJUSTMENT FOR ILLEGAL OR IMPROPER ACTIVITY
	29	52.215-10	PRICE REDUCTION FOR DEFECTIVE COST OR PRICING DATA
	30	552.270-13	PROPOSALS FOR ADJUSTMENT
	31		CHANGES
AUDITS	32	552.215-70	EXAMINATION OF RECORDS BY GSA
	33	52.215-2	AUDIT AND RECORDS—NEGOTIATION

INITIALS: _____ & _____
LESSOR GOVERNMENT

DISPUTES	34	52.233-1	DISPUTES
LABOR STANDARDS	35	52.222-26	EQUAL OPPORTUNITY
	36	52.222-21	PROHIBITION OF SEGREGATED FACILITIES
	37	52.219-28	POST-AWARD SMALL BUSINESS PROGRAM REREPRESENTATION
	38	52.222-35	EQUAL OPPORTUNITY FOR VETERANS
	39	52.222-36	EQUAL OPPORTUNITY FOR WORKERS WITH DISABILITIES
	40	52.222-37	EMPLOYMENT REPORTS ON VETERANS
SUBCONTRACTING	41	52.209-6	PROTECTING THE GOVERNMENT'S INTEREST WHEN SUBCONTRACTING WITH CONTRACTORS DEBARRED, SUSPENDED, OR PROPOSED FOR DEBARMENT
	42	52.215-12	SUBCONTRACTOR CERTIFIED COST OR PRICING DATA
	43	52.219-8	UTILIZATION OF SMALL BUSINESS CONCERNS
	44	52.219-9	SMALL BUSINESS SUBCONTRACTING PLAN
	45	52.219-16	LIQUIDATED DAMAGES—SUBCONTRACTING PLAN
	46	52.204-10	REPORTING EXECUTIVE COMPENSATION AND FIRST-TIER SUBCONTRACT AWARDS
	47	552.219-73	GOALS FOR SUBCONTRACTING PLAN

The information collection requirements contained in this solicitation/contract that are not required by regulation have been approved by the Office of Management and Budget (OMB) pursuant to the Paperwork Reduction Act and assigned the OMB Control No. 3090-0163.

GENERAL CLAUSES
(Acquisition of Leasehold Interests in Real Property)

1. SUBLETTING AND ASSIGNMENT (JAN 2011)

The Government may sublet any part of the premises but shall not be relieved from any obligations under this lease by reason of any such subletting. The Government may at any time assign this lease, and be relieved from all obligations to Lessor under this lease excepting only unpaid rent and other liabilities, if any, that have accrued to the date of said assignment. Any subletting or assignment shall be subject to prior written consent of Lessor, which shall not be unreasonably withheld.

2. 552.270-11 SUCCESSORS BOUND (SEP 1999)

This lease shall bind, and inure to the benefit of, the parties and their respective heirs, executors, administrators, successors, and assigns.

3. 552.270-23 SUBORDINATION, NON-DISTURBANCE AND ATTORNMENT (SEP 1999)

(a) Lessor warrants that it holds such title to or other interest in the premises and other property as is necessary to the Government's access to the premises and full use and enjoyment thereof in accordance with the provisions of this lease. Government agrees, in consideration of the warranties and conditions set forth in this clause, that this lease is subject and subordinate to any and all recorded mortgages, deeds of trust and other liens now or hereafter existing or imposed upon the premises, and to any renewal, modification or extension thereof. It is the intention of the parties that this provision shall be self-operative and that no further instrument shall be required to effect the present or subsequent subordination of this lease. Government agrees, however, within twenty (20) business days next following the Contracting Officer's receipt of a written demand, to execute such instruments as Lessor may reasonably request to evidence further the subordination of this lease to any existing or future mortgage, deed of trust or other security interest pertaining to the premises, and to any water, sewer or access easement necessary or desirable to serve the premises or adjoining property owned in whole or in part by Lessor if such easement does not interfere with the full enjoyment of any right granted the Government under this lease.

(b) No such subordination, to either existing or future mortgages, deeds of trust or other lien or security instrument shall operate to affect adversely any right of the Government under this lease so long as the Government is not in default under this lease. Lessor will include in any future mortgage, deed of trust or other security instrument to which this lease becomes subordinate, or in a separate non-disturbance agreement, a provision to the foregoing effect. Lessor warrants that the holders of all notes or other obligations secured by existing mortgages, deeds of trust or other security instruments have consented to the provisions of this clause, and agrees to provide true copies of all such consents to the Contracting Officer promptly upon demand.

(c) In the event of any sale of the premises or any portion thereof by foreclosure of the lien of any such mortgage, deed of trust or other security instrument, or the giving of a deed in lieu of foreclosure, the Government will be deemed to have attorned to any purchaser, purchasers, transferee or transferees of the premises or any portion thereof and its or their successors and assigns, and any such purchasers and transferees will be deemed to have assumed all obligations of the Lessor under this lease, so as to establish direct privity of estate and contract between Government and such purchasers or transferees, with the same force, effect and relative priority in time and right as if the lease had initially been entered into between such purchasers or transferees and the Government; provided, further, that the Contracting Officer and such purchasers or transferees shall, with reasonable promptness following any such sale or deed delivery in lieu of foreclosure, execute all such revisions to this lease, or other writings, as shall be necessary to document the foregoing relationship.

(d) None of the foregoing provisions may be deemed or construed to imply a waiver of the Government's rights as a sovereign.

4. 552.270-24 STATEMENT OF LEASE (SEP 1999)

(a) The Contracting Officer will, within thirty (30) days next following the Contracting Officer's receipt of a joint written request from Lessor and a prospective lender or purchaser of the building, execute and deliver to Lessor a letter stating that the same is issued subject to the conditions stated in this clause and, if such is the case, that (1) the lease is in full force and effect; (2) the date to which the rent and other charges have been paid in advance, if any; and (3) whether any notice of default has been issued.

(b) Letters issued pursuant to this clause are subject to the following conditions:

(1) That they are based solely upon a reasonably diligent review of the Contracting Officer's lease file as of the date of issuance;

(2) That the Government shall not be held liable because of any defect in or condition of the premises or building;

(3) That the Contracting Officer does not warrant or represent that the premises or building comply with applicable Federal, State and local law; and

(4) That the Lessor, and each prospective lender and purchaser are deemed to have constructive notice of such facts as would be ascertainable by reasonable pre-purchase and pre-commitment inspection of the Premises and Building and by inquiry to appropriate Federal, State and local Government officials.

5. 552.270-25 SUBSTITUTION OF TENANT AGENCY (SEP 1999)

The Government may, at any time and from time to time, substitute any Government agency or agencies for the Government agency or agencies, if any, named in the lease.

6. 552.270-26 NO WAIVER (SEP 1999)

No failure by either party to insist upon the strict performance of any provision of this lease or to exercise any right or remedy consequent upon a breach thereof, and no acceptance of full or partial rent or other performance by either party during the continuance of any such breach shall constitute a waiver of any such breach of such provision.

7. INTEGRATED AGREEMENT (JUN 2012)

This Lease, upon execution, contains the entire agreement of the parties and no prior written or oral agreement, express or implied, shall be admissible to contradict the provisions of the Lease. Except as expressly attached to and made a part of the Lease, neither the Request for Lease Proposals nor any pre-award communications by either party shall be incorporated in the Lease.

8. 552.270-28 MUTUALITY OF OBLIGATION (SEP 1999)

The obligations and covenants of the Lessor, and the Government's obligation to pay rent and other Government obligations and covenants, arising under or related to this Lease, are interdependent. The Government may, upon issuance of and delivery to Lessor of a final decision asserting a claim against Lessor, set off such claim, in whole or in part, as against any payment or payments then or thereafter due the Lessor under this lease. No setoff pursuant to this clause shall constitute a breach by the Government of this lease.

9. DELIVERY AND CONDITION (JAN 2011)

(a) Unless the Government elects to have the space occupied in increments, the space must be delivered ready for occupancy as a complete unit.

(b) The Government may elect to accept the Space notwithstanding the Lessor's failure to deliver the Space substantially complete; if the Government so elects, it may reduce the rent payments.

10. DEFAULT BY LESSOR (APR 2012)

(a) The following conditions shall constitute default by the Lessor, and shall give rise to the following rights and remedies for the Government:

(1) Prior to Acceptance of the Premises. Failure by the Lessor to diligently perform all obligations required for Acceptance of the Space within the times specified, without excuse, shall constitute a default by the Lessor. Subject to provision of notice of default to the Lessor, and provision of a reasonable opportunity for the Lessor to cure its default, the Government may terminate the Lease on account of the Lessor's default.

(2) After Acceptance of the Premises. Failure by the Lessor to perform any service, to provide any item, or satisfy any requirement of this Lease, without excuse, shall constitute a default by the Lessor. Subject to provision of notice of default to the Lessor, and provision of a reasonable opportunity for the Lessor to cure its default, the Government may perform the service, provide the item, or obtain satisfaction of the requirement by its own employees or contractors. If the Government elects to take such action, the Government may deduct from rental payments its costs incurred in connection with taking the action. Alternatively, the Government may reduce the rent by an amount reasonably calculated to approximate the cost or value of the service not performed, item not provided, or requirement not satisfied, such reduction effective as of the date of the commencement of the default condition.

(3) Grounds for Termination. The Government may terminate the Lease if:

(i) The Lessor's default persists notwithstanding provision of notice and reasonable opportunity to cure by the Government, or

(ii) The Lessor fails to take such actions as are necessary to prevent the recurrence of default conditions,

and such conditions (i) or (ii) substantially impair the safe and healthful occupancy of the Premises, or render the Space unusable for its intended purposes.

(4) Excuse. Failure by the Lessor to timely deliver the Space or perform any service, provide any item, or satisfy any requirement of this Lease shall not be excused if its failure in performance arises from:

(i) Circumstances within the Lessor's control;

(ii) Circumstances about which the Lessor had actual or constructive knowledge prior to the Lease Award Date that could reasonably be expected to affect the Lessor's capability to perform, regardless of the Government's knowledge of such matters;

(iii) The condition of the Property;

(iv) The acts or omissions of the Lessor, its employees, agents or contractors; or

(v) The Lessor's inability to obtain sufficient financial resources to perform its obligations.

(5) The rights and remedies specified in this clause are in addition to any and all remedies to which the Government may be entitled as a matter of law.

11. 552.270-19 PROGRESSIVE OCCUPANCY (SEP 1999)

The Government shall have the right to elect to occupy the space in partial increments prior to the substantial completion of the entire leased premises, and the Lessor agrees to schedule its work so as to deliver the space incrementally as elected by the Government. The Government shall pay rent commencing with the first business day following substantial completion of the entire leased premise unless the Government has elected to occupy the leased premises incrementally. In case of incremental occupancy, the Government shall pay rent pro rata upon the first business day following substantial completion of each incremental unit. Rental payments shall become due on the first workday of the month following the month in which an increment of space is substantially complete, except that should an increment of space be substantially completed after the fifteenth day of the month, the payment due date will be the first workday of the second month following the month in which it was substantially complete. The commencement date of the firm lease term will be a composite determined from all rent commencement dates.

12. MAINTENANCE OF THE PROPERTY, RIGHT TO INSPECT (APR 2015)

The Lessor shall maintain the Property, including the building, building systems, and all equipment, fixtures, and appurtenances furnished by the Lessor under this Lease, in good repair and tenantable condition so that they are suitable in appearance and capable of supplying such heat, air conditioning, light, ventilation, safety systems, access and other things to the premises, without reasonably preventable or recurring disruption, as is required for the Government's access to, occupancy, possession, use and enjoyment of the premises as provided in this lease. For the purpose of so maintaining the premises, the Lessor may at reasonable times enter the premises with the approval of the authorized Government representative in charge. Upon request of the Lease Contracting Officer (LCO), the Lessor shall provide written documentation that building systems have been properly maintained, tested, and are operational within manufacturer's warranted operating standards. The Lessor shall maintain the Premises in a safe and healthful condition according to applicable OSHA standards and all other requirements of this Lease, including standards governing indoor air quality, existence of mold and other biological hazards, presence of hazardous materials, etc. The Government shall have the right, at any time after the Lease Award Date and during the term of the Lease, to inspect all areas of the Property to which access is necessary for the purpose of determining the Lessor's compliance with this clause.

13. FIRE AND CASUALTY DAMAGE (JUN 20126)

If the building in which the Premises are located is totally destroyed or damaged by fire or other casualty, this Lease shall immediately terminate. If the building in which the Premises are located are only partially destroyed or damaged, so as to render the Premises untenantable, or not usable for their intended purpose, the Lessor shall have the option to elect to repair and restore the Premises or terminate the Lease. The Lessor shall be permitted a reasonable amount of time, not to exceed **270 days** from the event of destruction or damage, to repair or restore the Premises, provided that the Lessor submits to the Government a reasonable schedule for repair of the Premises within **60 days** of the event of destruction or damage. If the Lessor fails to timely submit a reasonable schedule for completing the work, the Government may elect to terminate the Lease effective as of the date of the event of destruction or damage. If the Lessor elects to repair or restore the Premises, but fails to repair or restore the Premises within **270 days** from the event of destruction or damage, or fails to diligently pursue such repairs or restoration so as to render timely completion commercially impracticable, the Government may terminate the Lease effective as of the date of the destruction or damage. During the time that the Premises are unoccupied, rent shall be abated. Termination of the Lease by either party under this clause shall not give rise to liability for either party.

Nothing in this lease shall be construed as relieving Lessor from liability for damage to, or destruction of, property of the United States of America caused by the willful or negligent act or omission of Lessor.

.

14. COMPLIANCE WITH APPLICABLE LAW (JAN 2011)

Lessor shall comply with all Federal, state and local laws applicable to its ownership and leasing of the Property, including, without limitation, laws applicable to the construction, ownership, alteration or operation of all buildings, structures, and facilities located thereon, and obtain all necessary permits, licenses and similar items at its own expense. The Government will comply with all Federal, State and local laws applicable to and enforceable against

it as a tenant under this lease, provided that nothing in this Lease shall be construed as a waiver of the sovereign immunity of the Government. This Lease shall be governed by Federal law.

15. 552.270-12 ALTERATIONS (SEP 1999)

The Government shall have the right during the existence of this lease to make alterations, attach fixtures, and erect structures or signs in or upon the premises hereby leased, which fixtures, additions or structures so placed in, on, upon, or attached to the said premises shall be and remain the property of the Government and may be removed or otherwise disposed of by the Government. If the lease contemplates that the Government is the sole occupant of the building, for purposes of this clause, the leased premises include the land on which the building is sited and the building itself. Otherwise, the Government shall have the right to tie into or make any physical connection with any structure located on the property as is reasonably necessary for appropriate utilization of the leased space.

16. ACCEPTANCE OF SPACE AND CERTIFICATE OF OCCUPANCY (APR 2015)

(a) Ten (10) working days prior to the completion of the Space, the Lessor shall issue written notice to the Government to schedule the inspection of the Space for acceptance. The Government shall accept the Space only if the construction of building shell and TIs conforming to this Lease and the approved DIDs is substantially complete, and a Certificate of Occupancy has been issued as set forth below.

(b) The Space shall be considered substantially complete only if the Space may be used for its intended purpose and completion of remaining work will not unreasonably interfere with the Government's enjoyment of the Space. Acceptance shall be final and binding upon the Government with respect to conformance of the completed TIs to the approved DIDs, with the exception of items identified on a punchlist generated as a result of the inspection, concealed conditions, latent defects, or fraud, but shall not relieve the Lessor of any other Lease requirements.

(c) The Lessor shall provide a valid Certificate of Occupancy, issued by the local jurisdiction, for the intended use of the Government. If the local jurisdiction does not issue Certificates of Occupancy or if the Certificate of Occupancy is not available, the Lessor may satisfy this condition by providing a report prepared by a licensed fire protection engineer that indicates that the Space and Building are compliant with all applicable local codes and ordinances and all fire protection and life safety-related requirements of this Lease to ensure an acceptable level of safety is provided. Under such circumstances, the Government shall only accept the Space without a Certificate of Occupancy if a licensed fire protection engineer determines that the offered space is compliant with all applicable local codes and ordinances and fire protection and life safety-related requirements of this Lease.

17. 52.204-7 SYSTEM FOR AWARD MANAGEMENT (JUL 2013)

This clause is incorporated by reference.

18. 52.204-13 SYSTEM FOR AWARD MANAGEMENT MAINTENANCE (JUL 2013)

This clause is incorporated by reference.

19. 552.270-31 PROMPT PAYMENT (JUN 2011)

The Government will make payments under the terms and conditions specified in this clause. Payment shall be considered as being made on the day a check is dated or an electronic funds transfer is made. All days referred to in this clause are calendar days, unless otherwise specified.

(a) *Payment due date—*

(1) *Rental payments.* Rent shall be paid monthly in arrears and will be due on the first workday of each month, and only as provided for by the lease.

(i) When the date for commencement of rent falls on the 15th day of the month or earlier, the initial monthly rental payment under this contract shall become due on the first workday of the month following the month in which the commencement of the rent is effective.

(ii) When the date for commencement of rent falls after the 15th day of the month, the initial monthly rental payment under this contract shall become due on the first workday of the second month following the month in which the commencement of the rent is effective.

(2) *Other payments.* The due date for making payments other than rent shall be the later of the following two events:

(i) The 30th day after the designated billing office has received a proper invoice from the Contractor.

(ii) The 30th day after Government acceptance of the work or service. However, if the designated billing office fails to annotate the invoice with the actual date of receipt, the invoice payment due date shall be deemed to be the 30th day after the Contractor's invoice is dated, provided a proper invoice is received and there is no disagreement over quantity, quality, or Contractor compliance with contract requirements.

(b) *Invoice and inspection requirements for payments other than rent.*

(1) The Contractor shall prepare and submit an invoice to the designated billing office after completion of the work. A proper invoice shall include the following items:

(i) Name and address of the Contractor.

(ii) Invoice date.

(iii) Lease number.

(iv) Government's order number or other authorization.

(v) Description, price, and quantity of work or services delivered.

(vi) Name and address of Contractor official to whom payment is to be sent (must be the same as that in the remittance address in the lease or the order).

(vii) Name (where practicable), title, phone number, and mailing address of person to be notified in the event of a defective invoice.

(2) The Government will inspect and determine the acceptability of the work performed or services delivered within seven days after the receipt of a proper invoice or notification of completion of the work or services unless a different period is specified at the time the order is placed. If actual acceptance occurs later, for the purpose of determining the payment due date and calculation of interest, acceptance will be deemed to occur on the last day of the seven day inspection period. If the work or service is rejected for failure to conform to the technical requirements of the contract, the seven days will be counted beginning with receipt of a new invoice or notification. In either case, the Contractor is not entitled to any payment or interest unless actual acceptance by the Government occurs.

(c) *Interest Penalty.*

(1) An interest penalty shall be paid automatically by the Government, without request from the Contractor, if payment is not made by the due date.

(2) The interest penalty shall be at the rate established by the Secretary of the Treasury under Section 12 of the Contract Disputes Act of 1978 (41 U.S.C. 611) that is in effect on the day after the due date. This rate is referred to as the "Renegotiation Board Interest Rate," and it is published in the **Federal Register**

semiannually on or about January 1 and July 1. The interest penalty shall accrue daily on the payment amount approved by the Government and be compounded in 30-day increments inclusive from the first day after the due date through the payment date.

(3) Interest penalties will not continue to accrue after the filing of a claim for such penalties under the clause at 52.233–1, Disputes, or for more than one year. Interest penalties of less than $1.00 need not be paid.

(4) Interest penalties are not required on payment delays due to disagreement between the Government and Contractor over the payment amount or other issues involving contract compliance or on amounts temporarily withheld or retained in accordance with the terms of the contract. Claims involving disputes, and any interest that may be payable, will be resolved in accordance with the clause at 52.233-1, Disputes.

(d) *Overpayments.* If the Lessor becomes aware of a duplicate payment or that the Government has otherwise overpaid on a payment, the Contractor shall—

(1) Return the overpayment amount to the payment office cited in the contract along with a description of the overpayment including the—

(i) Circumstances of the overpayment (*e.g.,* duplicate payment, erroneous payment, liquidation errors, date(s) of overpayment);

(ii) Affected lease number; (iii) Affected lease line item or sub-line item, if applicable; and

(iii) Lessor point of contact.

(2) Provide a copy of the remittance and supporting documentation to the Contracting Officer.

20. 52.232-23 ASSIGNMENT OF CLAIMS (MAY 2014)

(Applicable to leases over the micro-purchase threshold.)

(a) The Contractor, under the Assignment of Claims Act, as amended, 31 U.S.C. 3727, 41 U.S.C. 6305 (hereafter referred to as "the Act"), may assign its rights to be paid amounts due or to become due as a result of the performance of this contract to a bank, trust company, or other financing institution, including any Federal lending agency. The assignee under such an assignment may thereafter further assign or reassign its right under the original assignment to any type of financing institution described in the preceding sentence.

(b) Any assignment or reassignment authorized under the Act and this clause shall cover all unpaid amounts payable under this contract, and shall not be made to more than one party, except that an assignment or reassignment may be made to one party as agent or trustee for two or more parties participating in the financing of this contract.

(c) The Contractor shall not furnish or disclose to any assignee under this contract any classified document (including this contract) or information related to work under this contract until the Contracting Officer authorizes such action in writing.

21. PAYMENT (MAY 2011)

(a) When space is offered and accepted, the amount of American National Standards Institute/Building Owners and Managers Association Office Area (ABOA) square footage delivered will be confirmed by:

(1) The Government's measurement of plans submitted by the successful Offeror as approved by the Government, and an inspection of the space to verify that the delivered space is in conformance with such

plans or

(2) A mutual on-site measurement of the space, if the Contracting Officer determines that it is necessary.

(b) Payment will not be made for space which is in excess of the amount of ABOA square footage stated in the lease.

(c) If it is determined that the amount of ABOA square footage actually delivered is less than the amount agreed to in the lease, the lease will be modified to reflect the amount of ABOA space delivered and the annual rental will be adjusted as follows:

ABOA square feet not delivered multiplied by one plus the common area factor (CAF), multiplied by the rate per rentable square foot (RSF). That is: (1+CAF) x Rate per RSF = Reduction in Annual Rent

22. 52.232-33 PAYMENT BY ELECTRONIC FUNDS TRANSFER—SYSTEM FOR AWARD MANAGEMENT (JUL 2013)

This clause is incorporated by reference.

23. 52.203-13 CONTRACTOR CODE OF BUSINESS ETHICS AND CONDUCT (OCT 2015)

(Applicable to leases over $5.5 million total contract value and performance period is 120 days or more.)

This clause is incorporated by reference.

24. 552.270-32 COVENANT AGAINST CONTINGENT FEES (JUN 2011)

(Applicable to leases over the Simplified Lease Acquisition Threshold.)

(a) The Contractor warrants that no person or agency has been employed or retained to solicit or obtain this contract upon an agreement or understanding for a contingent fee, except a bona fide employee or agency. For breach or violation of this warranty, the Government shall have the right to annul this contract without liability or, in its discretion, to deduct from the contract price or consideration, or otherwise recover the full amount of the contingent fee.

(b) *Bona fide agency,* as used in this clause, means an established commercial or selling agency (including licensed real estate agents or brokers), maintained by a Contractor for the purpose of securing business, that neither exerts nor proposes to exert improper influence to solicit or obtain Government contracts nor holds itself out as being able to obtain any Government contract or contracts through improper influence.

(1) Bona fide employee, as used in this clause, means a person, employed by a Contractor and subject to the Contractor's supervision and control as to time, place, and manner of performance, who neither exerts nor proposes to exert improper influence to solicit or obtain Government contracts nor holds out as being able to obtain any Government contract or contracts through improper influence.

(2) Contingent fee, as used in this clause, means any commission, percentage, brokerage, or other fee that is contingent upon the success that a person or concern has in securing a Government contract.

(3) Improper influence, as used in this clause, means any influence that induces or tends to induce a *Government* employee or officer to give consideration or to act regarding a Government contract on any basis other than the merits of the matter.

25. 52.203-7 ANTI-KICKBACK PROCEDURES (MAY 2014)

(Applicable to leases over the Simplified Lease AcquisitionThreshold.)

This clause is incorporated by reference.

26. 52.223-6 DRUG-FREE WORKPLACE (MAY 2001)

(Applicable to leases over the Simplified Lease Acquisition Threshold, as well as to leases of any value awarded to an individual.)

This clause is incorporated by reference.

27. 52.203-14 DISPLAY OF HOTLINE POSTER(S) (OCT 2015)

(Applicable to leases over $5.5 Million total contract value and performance period is 120 days or more.)

(a) Definition.

"United States," as used in this clause, means the 50 States, the District of Columbia, and outlying areas.

(b) Display of fraud hotline poster(s). Except as provided in paragraph (c)—

(1) During contract performance in the United States, the Contractor shall prominently display in common work areas within business segments performing work under this contract and at contract work sites—

(i) Any agency fraud hotline poster or Department of Homeland Security (DHS) fraud hotline poster identified in paragraph (b)(3) of this clause; and

(ii) Any DHS fraud hotline poster subsequently identified by the Contracting Officer.

(2) Additionally, if the Contractor maintains a company website as a method of providing information to employees, the Contractor shall display an electronic version of the poster(s) at the website.

(3) Any required posters may be obtained as follows:

Poster(s)	Obtain from
GSA Office of Inspector General "FRAUDNET HOTLINE	Contracting Officer

(Contracting Officer shall insert—

(i) Appropriate agency name(s) and/or title of applicable Department of Homeland Security fraud hotline poster); and

(ii) The website(s) or other contact information for obtaining the poster(s).)

(c) If the Contractor has implemented a business ethics and conduct awareness program, including a reporting mechanism, such as a hotline poster, then the Contractor need not display any agency fraud hotline posters as required in paragraph (b) of this clause, other than any required DHS posters.

(d) Subcontracts. The Contractor shall include the substance of this clause, including this paragraph (d), in all subcontracts that exceed $5.5 million, except when the subcontract—

(1) Is for the acquisition of a commercial item; or

(2) Is performed entirely outside the United States.

28. 552.270-30 PRICE ADJUSTMENT FOR ILLEGAL OR IMPROPER ACTIVITY (JUN 2011)

(Applicable to leases over the Simplified Lease Acquisition Threshold.)

(a) If the head of the contracting activity (HCA) or his or her designee determines that there was a violation of subsection 27(a) of the Office of Federal Procurement Policy Act, as amended (41 U.S.C. 423), as implemented in the Federal Acquisition Regulation, the Government, at its election, may—

(1) Reduce the monthly rental under this lease by five percent of the amount of the rental for each month of the remaining term of the lease, including any option periods, and recover five percent of the rental already paid;

(2) Reduce payments for alterations not included in monthly rental payments by five percent of the amount of the alterations agreement; or

(3) Reduce the payments for violations by a Lessor's subcontractor by an amount not to exceed the amount of profit or fee reflected in the subcontract at the time the subcontract was placed.

(b) Prior to making a determination as set forth above, the HCA or designee shall provide to the Lessor a written notice of the action being considered and the basis thereof. The Lessor shall have a period determined by the agency head or designee, but not less than 30 calendar days after receipt of such notice, to submit in person, in writing, or through a representative, information and argument in opposition to the proposed reduction. The agency head or designee may, upon good cause shown, determine to deduct less than the above amounts from payments.

(c) The rights and remedies of the Government specified herein are not exclusive, and are in addition to any other rights and remedies provided by law or under this lease.

29. 52.215-10 PRICE REDUCTION FOR DEFECTIVE COST OR PRICING DATA (AUG 2011)

(Applicable when cost or pricing data are required for work or services over $750,000.)
This clause is incorporated by reference.

30. 552.270-13 PROPOSALS FOR ADJUSTMENT (SEP 1999)

(a) The Contracting Officer may, from time to time during the term of this lease, require changes to be made in the work or services to be performed and in the terms or conditions of this lease. Such changes will be required under the Changes clause.

(b) If the Contracting Officer makes a change within the general scope of the lease, the Lessor shall submit, in a timely manner, an itemized cost proposal for the work to be accomplished or services to be performed when the cost exceeds $100,000. The proposal, including all subcontractor work, will contain at least the following detail—

(1) Material quantities and unit costs;

(2) Labor costs (identified with specific item or material to be placed or operation to be performed;

(3) Equipment costs;

(4) Worker's compensation and public liability insurance;

(5) Overhead;

(6) Profit; and

(7) Employment taxes under FICA and FUTA.

(c) The following Federal Acquisition Regulation (FAR) provisions also apply to all proposals exceeding $500,000 in cost—

(1) The Lessor shall provide cost or pricing data including subcontractor cost or pricing data (48 CFR 15.403-4) and

(2) The Lessor's representative, all Contractors, and subcontractors whose portion of the work exceeds $500,000 must sign and return the "Certificate of Current Cost or Pricing Data" (48 CFR 15.406-2).

(d) Lessors shall also refer to 48 CFR Part 31, Contract Cost Principles, for information on which costs are allowable, reasonable, and allocable in Government work.

31. CHANGES (MAR 2013)

(a) The LCO may at any time, by written order, direct changes to the Tenant Improvements within the Space, Building Security Requirements, or the services required under the Lease.

(b) If any such change causes an increase or decrease in Lessor's costs or time required for performance of its obligations under this Lease, whether or not changed by the order, the Lessor shall be entitled to an amendment to the Lease providing for one or more of the following:

(1) An adjustment of the delivery date;

(2) An equitable adjustment in the rental rate;

(3) A lump sum equitable adjustment; or

(4) A change to the operating cost base, if applicable.

(c) The Lessor shall assert its right to an amendment under this clause within 30 days from the date of receipt of the change order and shall submit a proposal for adjustment. Failure to agree to any adjustment shall be a dispute under the Disputes clause. However, the pendency of an adjustment or existence of a dispute shall not excuse the Lessor from proceeding with the change as directed.

(d) Absent a written change order from the LCO, or from a Government official to whom the LCO has explicitly and in writing delegated the authority to direct changes, the Government shall not be liable to Lessor under this clause.

32. 552.215-70 EXAMINATION OF RECORDS BY GSA (FEB 1996)

The Contractor agrees that the Administrator of General Services or any duly authorized representative shall, until the expiration of 3 years after final payment under this contract, or of the time periods for the particular records specified in Subpart 4.7 of the Federal Acquisition Regulation (48 CFR 4.7), whichever expires earlier, have access to and the right to examine any books, documents, papers, and records of the Contractor involving transactions related to this contract or compliance with any clauses thereunder. The Contractor further agrees to include in all its subcontracts hereunder a provision to the effect that the subcontractor agrees that the Administrator of General Services or any duly authorized representatives shall, until the expiration of 3 years after final payment under the subcontract, or of the time periods for the particular records specified in Subpart 4.7 of the Federal Acquisition Regulation (48 CFR 4.7), whichever expires earlier, have access to and the right to examine any books, documents, papers, and records of such subcontractor involving transactions related to the subcontract or compliance with any clauses thereunder. The term "subcontract" as used in this clause excludes (a) purchase orders not exceeding $100,000 and (b) subcontracts or purchase orders for public utility services at rates established for uniform applicability to the general public.

33. 52.215-2 AUDIT AND RECORDS—NEGOTIATION (OCT 2010)

(Applicable to leases over the Simplified Lease Acquisition Threshold.)

This clause is incorporated by reference.

34. 52.233-1 DISPUTES (MAY 2014)
This clause is incorporated by reference.

35. 52.222-26 EQUAL OPPORTUNITY (APR 2015)
This clause is incorporated by reference.

36. 52.222-21 PROHIBITION OF SEGREGATED FACILITIES (APR 2015)
This clause is incorporated by reference.

37. 52.219-28 POST-AWARD SMALL BUSINESS PROGRAM REREPRESENTATION (JUL 2013)
(Applicable to leases exceeding the micro-purchase threshold.)
This clause is incorporated by reference.

38. 52.222-35 EQUAL OPPORTUNITY FOR VETERANS (OCT 2015)
(Applicable to leases $150,000 or more, total contract value.)

(a) Definitions. As used in this clause—

"Active duty wartime or campaign badge veteran," "Armed Forces service medal veteran," "disabled veteran," "protected veteran," "qualified disabled veteran," and "recently separated veteran" have the meanings given at FAR 22.1301.

(b) Equal opportunity clause. The Contractor shall abide by the requirements of the equal opportunity clause at 41 CFR 60-300.5(a), as of March 24, 2014. This clause prohibits discrimination against qualified protected veterans, and requires affirmative action by the Contractor to employ and advance in employment qualified protected veterans.

(c) Subcontracts. The Contractor shall insert the terms of this clause in subcontracts of $150,000 or more unless exempted by rules, regulations, or orders of the Secretary of Labor. The Contractor shall act as specified by the Director, Office of Federal Contract Compliance Programs, to enforce the terms, including action for noncompliance. Such necessary changes in language may be made as shall be appropriate to identify properly the parties and their undertakings.

39. 52.222-36 EQUAL OPPORTUNITY FOR WORKERS WITH DISABILITIES (JUL 2014)
(Applicable to leases over $15,000 total contract value.)

(a) *Equal opportunity clause*. The Contractor shall abide by the requirements of the equal opportunity clause at 41 CFR 60-741.5(a), as of March 24, 2014. This clause prohibits discrimination against qualified individuals on the basis of disability, and requires affirmative action by the Contractor to employ and advance in employment qualified individuals with disabilities.

(b) *Subcontracts*. The Contractor shall include the terms of this clause in every subcontract or purchase order in excess of $15,000 unless exempted by rules, regulations, or orders of the Secretary, so that such provisions will be binding upon each subcontractor or vendor. The Contractor shall act as specified by the Director, Office of Federal Contract Compliance Programs of the U.S. Department of Labor, to enforce the terms, including action for noncompliance. Such necessary changes in language may be made as shall be appropriate to identify properly the parties and their undertakings.

40. 52.222-37 EMPLOYMENT REPORTS ON VETERANS (FEB 2016)
(Applicable to leases $150,000 or more, total contract value.)
This clause is incorporated by reference.

41. 52.209-6 PROTECTING THE GOVERNMENT'S INTEREST WHEN SUBCONTRACTING WITH CONTRACTORS DEBARRED, SUSPENDED, OR PROPOSED FOR DEBARMENT (OCT 2015)
(Applicable to leases over $35,000 total contract value.)
This clause is incorporated by reference.

42. 52.215-12 SUBCONTRACTOR CERTIFIED COST OR PRICING DATA (OCT 2010)
(Applicable if over $750,000 total contract value.)
This clause is incorporated by reference.

43. 52.219-8 UTILIZATION OF SMALL BUSINESS CONCERNS (OCT 2014)
(Applicable to leases over the Simplified Lease Acquisition Threshold.)
This clause is incorporated by reference.

44. 52.219-9 SMALL BUSINESS SUBCONTRACTING PLAN (OCT 2015) ALTERNATE III (OCT 2015)
(Applicable to leases over $700,000 total contract value.)
This clause is incorporated by reference.

45. 52.219-16 LIQUIDATED DAMAGES—SUBCONTRACTING PLAN (JAN 1999)
(Applicable to leases over $700,000 total contract value.)
This clause is incorporated by reference.

46. 52.204-10 REPORTING EXECUTIVE COMPENSATION AND FIRST-TIER SUBCONTRACT AWARDS (OCT 2015)
(Applicable if over $30,000 total contract value.)
This clause is incorporated by reference.

47. 552.219-73 GOALS FOR SUBCONTRACTING PLAN (JUN 2005), ALTERNATE I (SEP 1999)
(Applicable if over $700,000 total contract value.)
This clause is incorporated by reference.

ADDENDUM to the System for Award Management (SAM) REPRESENTATIONS AND CERTIFICATIONS (Acquisitions of Leasehold Interests in Real Property)	Request for Lease Proposals Number 5MI0204	Dated

Complete appropriate boxes, sign the form, and attach to offer.
The Offeror makes the following additional Representations. NOTE: The "Offeror," as used on this form, is the owner of the property offered, not an individual or agent representing the owner.

1. ANNUAL REPRESENTATIONS AND CERTIFICATIONS FOR LEASEHOLD ACQUISITIONS (APR 2015)

(a) (1) The North American Industry Classification System (NAICS) code for this acquisition is 531120, unless the real property is self-storage (#531130), land (#531190), or residential (#531110).

(2) The small business size standard is 38.5 Million in annual average gross revenue of the concern for the last 3 fiscal years.

(3) The small business size standard for a concern which submits an offer in its own name, other than on a construction or service contract, but which proposes to furnish a product which it did not itself manufacture, is 500 employees.

(b) The System for Award Management (SAM) is a centrally located, searchable database which assists in the development, maintenance, and provision of sources for future procurements. The Offeror, by signing this addendum, hereby certifies he is registered in SAM.

[ ] Registration Active and Copy Attached

2. 552.203-72 REPRESENTATION BY CORPORATIONS REGARDING AN UNPAID DELINQUENT FEDERAL TAX LIABILITY OR A FELONY CONVICTION UNDER ANY FEDERAL LAW (DEVIATION) (OCT 2013)

(a) In accordance with Sections 630 and 631 of Division of the Consolidated Appropriations Act, 2012 (Pub. L. 112-74), and Section 101 of the Continuing Appropriations Act, 2014 (Pub. L. 113-16) none of the funds made available by the Continuing Appropriations Act 2014 may be used to enter into a contract action with any corporation that---

(1) Has any unpaid Federal tax liability that has been assessed, for which all judicial and administrative remedies have been exhausted or have lapsed, and that is not being paid in a timely manner pursuant to an agreement with the authority responsible for collecting the tax liability, where the awarding agency is aware of the unpaid tax liability, unless the agency has considered suspension or debarment of the corporation and made a determination that this further action is not necessary to protect the interests of the Government, or

(2) Was convicted, or had an officer or agent of such corporation acting on behalf of the corporation convicted of a felony criminal violation under any Federal law within the preceding 24 months, where the awarding agency is aware of the conviction, unless the agency has considered suspension or debarment of the corporation or such officer or agent and made a determination that this action is not necessary to protect the interests of the Government.

(b) The Contractor represents that—

(1) It is [ ] is not [X] a corporation that has any unpaid Federal tax liability that has been assessed, for which all judicial and administrative remedies have been exhausted or have lapsed, and that is not being paid in a timely manner pursuant to an agreement with the authority responsible for collecting the tax liability.

(2) It is [ ] is not [X] a corporation that was convicted, or had an officer or agent of the corporation acting on behalf of the corporation, convicted of a felony criminal violation under any Federal law within the preceding 24 months.

3. OFFEROR'S DUNS NUMBER

(a) Enter number: (b) (4) [redacted]

(b) An offeror may obtain a DUNS number (i) via the Internet at http://fedgov.dnb.com/webform or if the offeror does not have internet access, it may call Dun and Bradstreet at 1-866-705-5711 if located within the United States; or (ii) If located outside the United States, by contacting the local Dun and Bradstreet office. The offeror should indicate that it is an offeror for a U.S. Government contract when contacting the local Dun and Bradstreet office.

OFFEROR OR LEGALLY AUTHORIZED REPRESENTATIVE	NAME, ADDRESS (INCLUDING ZIP CODE)	TELEPHONE NUMBER
	(b) (6) [redacted] Signature	(b) (4) [redacted] Date