RCRA CORRECTIVE MEASURES IMPLEMENTATION PLAN

SUBMITTED TO USEPA REGION III

By

Atlantic Research Corporation
5945 Wellington Road
Gainesville, Virginia 20155

Project No. 229931.0001

October 3, 2018

Prepared By:

TRC Environmental Corporation
11231 Cornell Park Drive
Cincinnati, Ohio 45242
T: 513-489-2255

TABLE OF CONTENTS

EXECUTIVE SUMMARY **1**

1.0 INTRODUCTION **3**

2.0 FACILITY HISTORY **4**
2.1 History 4
2.2 Supplemental Work, Interim Measures, and Risk 6
2.3 Corrective Measures Objectives 7

3.0 CORRECTIVE MEASURES IMPLEMENTATION **9**
3.1 Soil Meets Commercial / Industrial Standards 9
3.2 Groundwater Remedy 9
3.3 Institutional Controls on Groundwater 10
3.4 Controls on Unrestricted Use of Soil 10
3.5 Controls on Potential Vapor Intrusion 11

4.0 OPERATION, MAINTENANCE, AND MONITORING **11**

5.0 PERMITTING AND APPROVALS **12**

6.0 FACILITY HEALTH AND SAFETY PROTOCOLS **12**

7.0 REFERENCES **12**

Table of Contents (cont.)

List of Figures

1: Site Location Map
2: Defined Polygons That May Require Soil Management at the Site
3: Defined Area That May Require Vapor Intrusion Mitigation at the Site

List of Appendices

I: Management Plan
II: Community Relations Plan
III: Operation and Maintenance Plan
IV: Sampling and Analysis Plan and Groundwater Monitoring and Well Reduction Plan
V: Institutional Control Plan
VI: Soil Management Plan (contingent)
VII: Health and Safety Plan

ACRONYMS

ug/kg	micrograms per kilogram
ARC	Atlantic Research Corporation
CMI	Corrective Measures Implementation
CMI Order	Corrective Measures Implementation Order
CMI Plan	Corrective Measures Implementation Plan
COC	Constituent of Concern
DOD	Department of Defense
DW	Deep Well
ft	feet
Geosyntec	Geosyntec Consultants Inc.
HHRA	Human Health Risk Assessment
IM	Interim Measure
Integral	Integral Consulting Inc.
LLC	Limited Liability Company
MCL	Maximum Contaminant Level
NDTS	Northern Deep Ground Water Treatment System
O&M	Operation and Maintenance
PCBs	Polychlorinated Biphenyls
RCRA	Resource Conservation and Recovery Act
SAP	Sampling and Analysis Plan
SM Plan	Soil Management Plan
SRFI	Supplemental RCRA Facility Investigation
TRC	TRC Environmental Corporation
TTF	Thermal Treatment Facility
USEPA	United States Environmental Protection Agency
VDEQ	Virginia Department of Environmental Quality
VOCs	Volatile Organic Compounds
VPDES	Virginia Pollutant Discharge Elimination System

EXECUTIVE SUMMARY

This Corrective Measures Implementation Plan ("CMI Plan") is for the former Atlantic Research Corporation ("ARC") facility located at 5945 Wellington Road, Gainesville, Virginia 20155 ("Facility" or "Site"). The Facility has undergone RCRA[1] Corrective Action to address soil and groundwater impacts from the historic management of certain hazardous substances including perchlorate, volatile organic compounds, semi-volatile organic compounds, metals, energetic compounds, and polychlorinated biphenyls on the Site. ARC and predecessors operated the Facility as a solid fuel rocket propellant and rocket motor production Facility, primarily under contracts with the United States Department of Defense ("DOD") from 1951 to 2005, when the Facility was decommissioned. Operations included rocket and missile production, testing, research and development, and thermal treatment areas for the disposal of waste propellant.

The Site is approximately 416 acres in area and is zoned for heavy industrial use. The property on which the former ARC Facility was located has been owned by Gainesville Associates since 1976[2]. In 2017, approximately 181 acres of the original parcel was acquired from Gainesville Associates by Sharpless Enterprises, LLC for commercial/industrial use (referred to as the Sharpless Parcel; the remainder of the original parcel is referred to as the Gainesville Parcel). Figure 1 shows the Site location and boundaries.

Investigative activities and significant soil and groundwater remediation has been accomplished through completed soil and groundwater corrective and interim actions beginning in the 1980s. Groundwater remediation remains ongoing at the north-central portion of the Site (on the Gainesville Parcel) with performance monitoring on Site at downgradient locations. Constituents of concern meet risk-based cleanup standards in groundwater at the downgradient property boundary and there has been no off-site groundwater or surface water contaminant migration detected. Soil interim actions achieved commercial/industrial standards at the Site as approved by the United States Environmental Protection Agency ("USEPA") in 2013. The Human Health Risk Assessment was approved by USEPA in 2016.

There are no unacceptable health risks from current exposures to any environmental media at or around the Site. Remaining potential future exposure pathways (depending upon future use) are:

- Groundwater at portions of the Site may pose future worker risk if contacted during excavation activities.
- There are isolated areas of the Site with soil concentrations, which could result in hypothetical risk levels above USEPA's risk management limits for residential use for the following pathways:
    - Soil contact (in discrete areas of the Gainesville and Sharpless Parcels); however, the 181-acre Sharpless Parcel is being put to commercial/industrial use[3].

[1] RCRA = Resource Conservation and Recovery Act.
[2] Started as a Virginia General Partnership, but then converted in 2005 to Gainesville Associates, LLC, a Virginia Limited Liability Company (hereafter "Gainesville Associates").
[3] Please note that Gainesville Associates reported to USEPA in September 2018 that it excavated and disposed off-site all soils from the Sharpless Parcel that did not meet residential risk standards, thus rendering the parcel suitable for unrestricted land use (SCS Engineers, 2018).

- Homegrown produce ingestion of perchlorate (in discrete areas of the Gainesville and Sharpless Parcels); however, the 181-acre Sharpless Parcel is being put to commercial/industrial use making any residential uses and ingestion of produce from gardens unlikely[4].
- Soil vapor intrusion (in discrete areas of the Gainesville and Sharpless Parcels).

The baseline ecological risk assessment for the Site determined that the concentrations of constituents of potential concern in soil, sediment, and surface water are unlikely to pose a significant ecological risk. Although USEPA has not approved the Ecological Risk Assessment, it has recognized the likelihood that redevelopment would eliminate the potential need for ecological risk mitigation, and such redevelopment has commenced on the 181-acre Sharpless Parcel[5].

The remaining corrective action at the Site incorporates the ongoing groundwater remediation and the following:

- Compliance with the approved groundwater monitoring and remedial operation and maintenance plans.
- Institutional control restricting groundwater use at the Site by the owners of the Site.
- Requirement for USEPA-approved soil management at specified areas of the Site in the event of redevelopment for residential use on the approximately 235 acres currently owned by Gainesville Associates.
- Requirement for USEPA-approved vapor mitigation for new building construction within the specified area of the Site potentially subject to vapor intrusion from contaminated groundwater.
- Requirement for implementation of earth moving activities (e.g., excavation, drilling, construction, etc.) in compliance with Site-specific health and safety protocols.

This CMI Plan summarizes the ARC Facility history, remaining corrective measures objectives, and implementation plans. Individual plans for components of the final remedy are appended to this document, and consist of the following:

I: Management Plan
II: Community Relations Plan
III: Operation and Maintenance Plan
IV: Sampling and Analysis Plan and Groundwater Monitoring and Well Reduction Plan
V: Institutional Control Plan
VI: Soil Management Plan (contingent)
VII: Health and Safety Plan

[4] Idem
[5] Idem. The SCS Engineers report was prepared on behalf of Gainesville Associates and submitted to USEPA on September 6, 2018. The excavations summarized therein were conducted as an initial stage of redeveloping the Sharpless Parcel for commercial/ industrial land use, although not necessary for such use, since in 2013 USEPA had approved the ARC report concluding that commercial/industrial standards in soils at the Site had been achieved (ENVIRON, 2013).

1.0 INTRODUCTION

On October 20, 1992, Atlantic Research Corporation ("ARC") signed a Final Administrative Order on Consent for Corrective Measures Implementation ("CMI Order") at ARC's former Facility leased from Gainesville Associates[6], located at 5945 Wellington Road, Gainesville, Virginia 20155. The CMI Order requires that corrective measures at the Facility follow a Corrective Measures Implementation Plan ("CMI Plan"). Since 1992, ARC has implemented the CMI Plan in various phases, and has documented the results in various reports including work plans, supplemental site investigation, risk assessment, and interim measure reports, and other documents that have been reviewed and approved by the United States Environmental Protection Agency ("USEPA"). The implementation of the CMI Plan has resulted in the remediation of hazardous substances on the Site including perchlorate, volatile organic compounds, semi-volatile organic compounds, metals, energetic compounds, and polychlorinated biphenyls ("PCBs") present in soil and groundwater.

In a June 14, 2018 letter, USEPA indicated that ARC has satisfactorily completed certain corrective actions undertaken at the Site pursuant to the CMI Order, Sections VI. H[7] and I[8]. The letter also noted that ARC has satisfactorily completed Interim Measures ("IMs") as set forth in the December 20, 2013 USEPA-approved IM Report to address perchlorate and other constituents of concern in soils at the Site (Environ, 2013). USEPA approved ARC's Human Health Risk Assessment ("HHRA") in October 2016 that identified and defined specific areas of the Site ("Polygons") that exceed risk management levels for residential use (Integral, 2016). Given that contaminants remain in soil at the Site above residential risk management levels, and at concentrations above risk-based standards in groundwater beneath the Site, USEPA also requested that ARC update the CMI Plan to include an Institutional Control Plan ("IC Plan") and an updated Operation and Maintenance Plan ("O&M Plan") for USEPA review and approval.

This updated CMI Plan includes an overview of the Site and the basis for corrective measures implementation. The following documents are included as appendices:

- Management Plan
- Community Relations Plan
- Health and Safety Plan
- Operation and Maintenance Plan
- Groundwater Monitoring and Well Reduction Plan
- Institutional Control Plan
- Soil Management Plan (contingent)

[6] Gainesville Associates started its ownership interest in the Property as a Virginia General Partnership, but then converted in 2005 to Gainesville Associates, LLC, a Virginia Limited Liability Company (hereafter "Gainesville Associates").
[7] Section IV.H of the CMI Order addresses additional work at the Site, which included the supplemental RCRA Facility Investigation, associated risk assessment, and modification of groundwater remediation.
[8] Section IV.I of the CMI Order addresses Interim Measures at the Site, which included soil removal actions.

Public participation has occurred during the performance of the corrective action. Quarterly progress reports have been prepared by ARC that document corrective action activities over time. All reports have been made available to the general public at the public repository established by ARC at the Prince William County Library located at 4603 James Madison Highway, Haymarket, VA 20169-2526. In addition, USEPA has also posted some materials on-line at the USEPA Region 3 Mid-Atlantic Corrective Action Sites (community involvement information) Web site http://www.epa.gov/reg3wcmd/ca/va.htm.

2.0 FACILITY HISTORY

On October 20, 1992, ARC signed the CMI Order to implement corrective actions at ARC's Facility that is leased from Gainesville Associates. ARC has implemented the CMI Order in phases since 1992 following various work plans and documenting the results in various reports including supplemental site investigations, risk assessments, interim measure reports, groundwater monitoring reports, and quarterly progress reports, which have been reviewed and when required, approved by the USEPA. The implementation of the CMI has resulted in the remediation of hazardous substances on the Site including perchlorate, volatile organic compounds, semi-volatile organic compounds, metals, energetic compounds, and polychlorinated biphenyls present in soil and/or groundwater.

2.1 History

The Facility operated as a solid fuel rocket propellant and rocket motor production plant primarily under contracts with the DOD from 1951 to 2005, when the Facility was decommissioned by ARC. Early operation of the Facility was conducted by Susquehanna Corporation, until ARC became the operator in February 1972. Operations included rocket and missile production, testing, research and development, and thermal treatment areas for the disposal of waste propellant. The original Site is approximately 416 acres in area.

In 2001, ARC notified USEPA of the discovery of a perchlorate groundwater contaminant plume underneath the Facility. As a result of this discovery, ARC determined that supplemental RCRA investigation and IMs were necessary to evaluate and address the source and the risks, to further delineate the extent of contamination, and to control and treat the contaminant plume. This work supplemented ongoing remediation under the CMI Order.

The CMI Order provided ARC with the opportunity to implement corrective measures in a phased approach due to the large area of the property (approximately 416 acres), and the long and varied history of chemical use and management at various locations on the Site prior to ARC ceasing operations on the Site in 2005. Corrective measures on the Site have been conducted by ARC in a phased approach following USEPA-approved RCRA Facility Investigation and Interim Measure Work Plans. The activities described in these work plans were considered to be "supplemental" RFI, and corrective measure activities followed applicable work plan, notification, quality assurance, and reporting requirements outlined in the CMI Order.

Supplemental investigation activities were conducted at the Site beginning in 2002 and culminated with the submission of the Supplemental RCRA Facility investigation ("SRFI") in 2009. This work included the evaluation of perchlorate and other energetic constituents in environmental media, assessment of the potential vapor intrusion pathway for volatile organic compounds ("VOCs"), Site decommissioning (i.e., manufacturing operations ceased in 2004 and the Facility closed in April 2005), and elimination of identified data gaps associated with prior work.

Coinciding with this SRFI work, in 2002 ARC converted the existing pump and treat groundwater remediation system, which had operated since 1987, to a recirculating bioremediation system at extraction well DW-13 in the north central portion of the Site, referred to as the Northern Deep Treatment System ("NDTS"). In 2004, ARC implemented a similar recirculating system at extraction well DW-34 in the downgradient south central portion of the Site, which operated until 2007 when its cessation was approved by USEPA (Geosyntec, 2008).

Prior to implementing soil IMs based on the SRFI, decommissioning and RCRA closure of the Thermal Treatment Facility ("TTF") was conducted (2006-2011) under the jurisdiction of the Virginia Department of Environmental Quality ("VDEQ"). The TTF was an on-site hazardous waste treatment unit that operated under Interim Status from 1983 until the ARC Facility closed operations. It was located in a cleared area in the northwest section of the ARC Facility).

A soil IM program was implemented during the period from March 2012 to May 2013. The total quantity of soil and debris removed and disposed off-site was approximately 30,000 tons. Approximately 25% of the excavated material was disposed as hazardous/regulated waste and 75% was disposed as non-hazardous/non-regulated waste. Approximately 11 tons of energetic materials were disposed off-site. All remaining Site buildings have been certified as free of munitions concerns associated with prior operations (Environ, 2013).

The entire Site is currently zoned for heavy industrial use (M-1), including the approximately 181 acre parcel sold to Sharpless Enterprises, LLC in 2017 (the "Sharpless Parcel"), and has been so zoned since the initial adoption of the Prince William County Zoning Ordinance. ARC continues to lease the remaining western part of the Site (approximately 235 acres) from Gainesville Associates ("Gainesville Parcel"). Gainesville Associates has had a rezoning application pending with Prince William County for the past ten years, but to date no definitive action has been taken by the County Board of Supervisors.

Until recently Gainesville Associates has stated that it intends to redevelop the Site as a mixed-use commercial and potential residential development. More recently, Gainesville Associates has indicated that it intends to make the entire Site suitable for unrestricted use and has reported to USEPA that it has removed all potentially-restricted soils from the Sharpless Parcel (SCS Engineers, 2018). ARC is not responsible for the redevelopment of the Site to an unrestricted land use, however, it has taken into account this activity by Gainesville Associates in the development of this CMI Plan, and associated Institutional Control Plan ("IC Plan") and Soil Management Plan ("SM Plan").

2.2 Supplemental Work, Interim Measures, and Risk

The CMI process included the completion of an extensive SRFI that took place between 2003 and 2010 on the Site. The SRFI provided a summary of CMI activities conducted to that point in time, a data quality objectives review of historical analytical data, and evaluation of remaining data gaps including remaining areas of concern on the Site. The SRFI resulted in the identification of localized areas of soil contamination and buried debris on the Site that were mitigated by a soil removal interim measures program completed by ARC in 2012-2013. The results of the program were summarized by ARC in a Soil Interim Measures Report demonstrating that Site soils do not pose an unacceptable health risk for continued commercial/industrial use (Environ, 2013).

The results presented in the SRFI were used by ARC to prepare a supplemental HHRA that was approved by the USEPA in 2016. The HHRA concluded that corrective actions and interim measures at the Site has resulted in the safe use of the Site for commercial/industrial purposes with controls to mitigate exposure to contaminated groundwater, and to vapors beneath the property that may migrate at discrete locations on the Site into buildings, if any are constructed in those locations in the future. In addition, the HHRA concluded that the Site is also suitable for residential use provided that soils at certain localized areas on the Site are properly managed during re-development activities following a soil management plan, and that vapors in groundwater or soil that may exceed a risk of concern are controlled from entering into buildings, if necessary.

Re-development of the Sharpless Parcel was initiated in 2017 by Gainesville Associates, which included the excavation and grading of soils following a soil management plan, and demolition of buildings and other structures. Gainesville Associates has indicated that it has eliminated any residential risk from soils on the 181-acre Sharpless Parcel (SCS Engineers, 2018) required by the purchase sale agreement between those two parties. ARC and TRC[9] have reviewed the SCS Engineers (2018) report and agree with the conclusions presented in the report pertaining to risk on the Sharpless Parcel. Gainesville Associates has maintained records demonstrating the elimination of all soils risk on the Sharpless Parcel and has indicated that it intends to excavate and remove any similar soils on the Gainesville parcel as it proceeds with redevelopment.

ARC continues to operate and manage a groundwater extraction and treatment system on the Site with performance monitoring at on-Site monitoring wells locations, including monitoring wells located at the downgradient property boundary. Constituents of concern ("COCs") currently meet risk-based cleanup standards at the downgradient property boundary and there has been no off-site groundwater or surface water contaminant migration detected. The groundwater extraction system includes approximately 53 monitoring wells that are sampled semi-annually or annually as noted in the Groundwater Monitoring and Well Reduction Plan (TRC, 2017).

[9] TRC = TRC Environmental Corporation

In summary, there are no unacceptable health risks from current exposures to any environmental media at or around the Site. Remaining potential future exposure pathways (depending upon future use) that will be managed by this CMI Plan include:

- Groundwater at portions of the Site may pose future worker risk if contacted during excavation activities.
- There are isolated areas of the Site with soil or shallow groundwater concentrations, which could result in hypothetical risk levels above USEPA's risk management limits for residential use for the following pathways:
    - Soil contact in discrete areas of the Gainesville Parcel.
    - Homegrown produce ingestion of perchlorate in discrete areas of the Gainesville Parcel.
    - Soil vapor intrusion (in discrete areas of the Gainesville Parcel).

An ecological risk assessment prepared during the CMI determined that the concentrations of constituents of potential concern in soil, sediment, and surface water are unlikely to pose a significant ecological risk (Environ, 2012). USEPA has recognized the likelihood that redevelopment of the Site will eliminate any need to mitigate potential ecological risks, if any exist. As discussed above, such redevelopment has commenced on the 181-acre Sharpless Parcel.

2.3 Corrective Measures Objectives

The former and existing groundwater remediation system has been in place since 1987 and has been updated periodically to enhance its effectiveness (i.e., most recently in 2009). Operation of this system has prevented the off-site migration of COCs above maximum contaminant levels ("MCLs") and risk-based concentrations and will continue under the approved and updated Sampling and Analysis Plan (TRC, 2015) and Groundwater Monitoring and Well Reduction Plan (TRC 2017), which governs monitoring groundwater and surface water at the Site (**Appendix IV**).

The following Corrective Measures objectives are necessary to address the limited remaining potential exposure pathways at the Site:

1. Prevent the off-Site migration of impacted groundwater that exceeds MCLs or risk-based concentrations (i.e., in the absence of updated MCLs). This will prevent the potential exposure of unacceptable concentrations of VOCs and perchlorates in groundwater to potential off-site receptors via potable and non-potable uses, and be accomplished by:
    - Operating the existing groundwater remediation system, providing maintenance and upgrades, as warranted.
    - Monitoring groundwater conditions at the Site including the property boundary.
    - Abandoning non-essential groundwater monitoring wells, when warranted.

2. Implement controls to prevent exposure to impacted groundwater beneath the Site that exceeds MCLs or risk-based concentrations (i.e., in the absence of updated MCLs). This will prevent the potential

exposure of unacceptable concentrations of VOCs and perchlorates in groundwater to potential Site receptors via potable and non-potable uses, and will be accomplished by:

- Recording of Institutional Controls that restrict the use of groundwater beneath the Site. It should be noted that a Prince William County Ordinance requires mandatory hookup to public water supply and sewer services for all future land use development, and prohibits utilization of groundwater wells in such developments.
- Use of Worker Health and Safety Plan that is updated as necessary to prevent exposure to impacted shallow groundwater that may be encountered in the future by construction or maintenance workers conducting routine excavation work on the property.

3. Prevent potential human exposures to impacted soils exceeding acceptable risk levels for direct contact and ingestion of homegrown produce (from perchlorate) pathways,[10] if developed for residential use as opposed to the currently met commercial/industrial use standard, at discrete areas (Polygons) of the Site. As previously noted, Gainesville Associates has indicated that it has eliminated any residential risk from soils on the 181-acre Sharpless Parcel (SCS Engineers, 2018) required by the purchase sale agreement between the two parties to the transaction. ARC and TRC have reviewed the SCS Engineers (2018) report and agree with the conclusions presented in the report pertaining to risk on the Sharpless Parcel. ARC has been advised that Gainesville Associates has maintained records demonstrating the elimination of all soils risk on the Sharpless Parcel and has indicated that it intends to excavate and remove any similar soils on the Gainesville parcel as it proceeds with redevelopment in the future.

A Soil Management Plan that presents the process to manage soils that exceed a residential risk during future potential property re-development activities on the Gainesville Parcel is provided in **Appendix VI**.

4. Implement controls to prevent exposure to unacceptable concentrations of VOCs from soil and groundwater via potential vapor intrusion into future Site buildings where warranted, or maintain indoor air concentrations below unacceptable levels. This will be accomplished by:
    - Requiring a vapor barrier or other suitable engineering control for new building construction in discrete areas of the Site, which exceed Vapor Intrusion Screening Levels in groundwater.
    - Demonstrating that a vapor barrier or other suitable engineering control is not necessary for new building construction in discrete areas of the Site.

Gainesville Associates has indicated its intention to eliminate any soils-related residential risks on the Gainesville Parcel it has retained and has indicated that it has already eliminated such soils on the Sharpless Parcel it recently sold, as discussed above. The redevelopment of both the Gainesville Parcel and the Sharpless Parcel will eliminate any ecological risk at the Site.

[10] The acceptable risk level for perchlorate in soil was determined to be 3.7 ug/kg for the homegrown produce pathway (Integral, 2016), which covers the upper 3 feet of soil.

3.0 CORRECTIVE MEASURES IMPLEMENTATION

A Management Plan documenting the management strategy, key personnel, and responsibilities for implementation is included as **Appendix I**. Information regarding work conducted in association with this CMI Work Plan is shared with interested public parties as summarized in the Community Relations Plan included as **Appendix II**.

3.1 Soil Meets Commercial / Industrial Standards

The supplemental HHRA prepared by ARC during the CMI and approved by the USEPA in October 2016 concluded that the CMI process has resulted in the safe use of the Site for commercial/industrial purposes with controls to mitigate exposure to contaminated groundwater, and to vapors beneath the property that may migrate at discrete locations on the Site into buildings that may be constructed in those areas on the property in the future. As such, soil at the Site meets the industrial standards (and commercial standards), for which the Site is zoned by Prince William County.

3.2 Groundwater Remedy

The former and existing groundwater remediation system has been in place since 1987 and has been updated periodically to enhance its effectiveness (i.e., most recently in 2009). Operation of this system has prevented the off-site migration of COCs above maximum contaminant levels (MCLs) and risk-based concentrations and will continue under the approved Sampling and Analysis Plan (TRC, 2015) and Groundwater Monitoring and Well Reduction Plan (TRC 2017), which governs monitoring groundwater and surface water at the Site.

The groundwater remediation system is operated and maintained by ARC through an O&M Plan, which is updated as warranted and provided in **Appendix III**. Key components of the O&M Plan are:

- Equipment and materials
- Routine operation and maintenance
- System monitoring and inspection
- Troubleshooting and corrective maintenance
- Health and safety plan
- Documentation

Groundwater and surface water conditions at the Site are monitored periodically by ARC through a Sampling and Analysis Plan ("SAP"; TRC, 2015), and Groundwater Monitoring and Well Reduction Plan (TRC 2017), which is updated as warranted and provided in **Appendix IV**. Key components of the SAP are:

- Water level measurements and evaluation of system effectiveness
- Periodic groundwater and surface water sampling
- Quality assurance / quality control

- Data validation and evaluation
- Compliance with corrective measures objectives
- Documentation

3.3 Institutional Controls on Groundwater

To prevent exposure to impacted groundwater at the Site that exceeds MCLs or risk-based concentrations (i.e., in the absence of updated MCLs), ARC will request Gainesville Associates as the owner of the Gainesville Parcel and Sharpless Enterprises, LLC as the owner of the Sharpless Parcel to record a Deed of Restrictive Covenants with the land records housed in the Office of the Clerk of the Circuit Court of Prince William County that prohibits the use of groundwater at the Site for any purpose, including, but not limited to, use as a potable water source, other than to conduct the maintenance and monitoring activities required by the Order. This Deed of Restrictive Covenants shall "run with the land" and be included in every deed of conveyance of the Gainesville Parcel and Sharpless Parcel, respectively, or any part thereof. An Institutional Control Plan is provided in **Appendix V**.

In addition to recording the restriction on groundwater use at the Site, the Institutional Control Plan specifies soil management and vapor mitigation requirements for potential future exposure pathways in the event that the Site is redeveloped for unrestricted residential uses along pathways that potentially exceed the identified risk management criteria.

3.4 Controls on Unrestricted Use of Soil

The Site soils currently meet commercial/industrial standards and may be used for such purposes.

The areas of the Facility defined by the Polygons developed in the HHRA may not be used for residential purposes unless it is demonstrated to USEPA that residential use does not pose a threat to human health, and USEPA provides prior written approval that residential use is unrestricted. Polygons specifying land use areas that are not unrestricted are provided in Figure 2. The Site currently remains zoned for industrial use.

- Since many of these Polygons are restricted because of the presence of perchlorate, which has been demonstrated to be attenuating to lower concentrations over time (Integral, 2016), demonstration through sampling that perchlorate concentrations have attenuated below residential risk management limits would satisfy USEPA (with its concurrence) as to future unrestricted use of the demonstrated area.
- Alternatively, unrestricted land use in the defined Polygons may be achieved by removing impacted soils from the Polygon and using the soil elsewhere (i.e., in specified commercial/industrial areas of the Site or disposing the soil off Site).

A Soil Management Plan is provided in **Appendix VI**. The SM Plan presents the process for relocating soils that exceed a residential risk of concern at discrete locations on the Site so that residential development can occur in the future, if necessary. If Gainesville Associates chooses to remove all soils

on the Gainesville parcel (as has been done on the Sharpless parcel) by excavating and disposing all soils off-site that do not meet a residential risk standard, then the SM Plan is not necessary.

Earth moving activities, including excavation, drilling and construction activities, shall be conducted in compliance with Facility-specific health and safety protocols. TRC's updated Health and Safety Plan for TRC activities at the ARC Site is provided in **Appendix VII**. Health and Safety Plans will also be needed by others that the address potential exposure pathways associated with planned work at the Site.

3.5 Controls on Potential Vapor Intrusion

A vapor intrusion control system, the design of which has been approved by USEPA, shall be installed in each new structure constructed above the shallow contaminated groundwater plume or within 100-feet around the perimeter of the contaminated groundwater plume, unless it is demonstrated to USEPA that vapor intrusion does not pose a threat to human health, and USEPA provides prior written approval that no vapor intrusion control system is needed.

Figure 3 identifies the area of the Site that exceeds one or more Vapor Intrusion Screening levels for COCs in groundwater and a 100-foot buffer around the area, based on sampling data from April 2018. This area includes groundwater in the shallow unconsolidated materials (i.e., saprolite and diabase bedrock) and groundwater in metasedimentary bedrock near the surface (i.e., north-central area of the Site, where the groundwater remedy is implemented).

- ARC will assure that each new structure (capable of containing contaminant vapors from the subsurface) in the defined area will be provided a vapor intrusion control system (e.g., vapor barrier, sub-slab depressurization system, or other suitable engineering control), with concurrence of the design by USEPA. USEPA acknowledges that this work is required in property that is not owned or under control of ARC, therefore ARC shall use its best efforts to complete this work in accordance with Section IX.B of the Administrative Order, U.S. EPA Docket RCRA-III-056-CA.
- Alternatively, since the volatile COCs are being treated in situ and/or are attenuating in place (depending on the location within the defined area), ARC may demonstrate to USEPA that a vapor intrusion control is not necessary at the planned location of the new building.

4.0 OPERATION, MAINTENANCE, AND MONITORING

Operation, maintenance, and monitoring at the Site is primarily associated with the ongoing groundwater remedy. The groundwater remediation system is operated and maintained by ARC through an O&M Plan, which is updated as warranted and provided in **Appendix III**. Groundwater and surface water conditions at the Site are monitored periodically by ARC through a Sampling and Analysis Plan (TRC, 2015), and Groundwater Monitoring and Well Reduction Plan (TRC 2017), which is updated as warranted and provided in **Appendix IV**. ARC maintains access agreements with Gainesville Associates and Sharpless Enterprises to facilitate entry to the secured Site for this work. An annual report is submitted to USEPA in March of each year.

5.0 PERMITTING AND APPROVALS

ARC files Annual Water Withdrawal Reports with VDEQ for extraction well DW-13. Extracted water is reinjected with amendments as part of the ongoing groundwater remedy. Approximately 2,000,000 gallons per year is extracted and reinjected.

ARC formerly maintained a Virginia Pollutant Discharge Elimination System ("VPDES") permit for the Site (VA0087700; effective June 22, 2009). A May 20, 2013 request for termination of the VPDES permit was approved by the VDEQ on July 15, 2013, based on the fact that the pollutants of concern were no longer present in appreciable amounts in storm water, there is no industrial activity on the site, and there has not been observed toxicity in the discharge.

The use of injection wells as part of an aquifer remediation project is subject to the groundwater protection requirements of the Underground Injection Control (UIC) program. The UIC program is administered by USEPA in the Commonwealth of Virginia. USEPA authorized the subsurface emplacement of bioremediation supplements through injections well for aquifer remediation purposes in correspondence dated June 28, 2002.

The areas of the Facility defined by the Polygons developed in the HHRA may not be used for residential purposes unless it is demonstrated to USEPA that residential use does not pose a threat to human health, and USEPA provides prior written approval that residential use is unrestricted.

Each new structure (capable of containing contaminant vapors from the subsurface) in the defined area of the Site (i.e., that exceeds one or more Vapor Intrusion Screening levels for COCs in groundwater and a 100-foot buffer around the area) will require a vapor intrusion control system (e.g., vapor barrier, sub-slab depressurization system, or other suitable engineering control), with concurrence of the design from USEPA.

6.0 FACILITY HEALTH AND SAFETY PROTOCOLS

Earth moving activities, including excavation, drilling and construction activities, shall be conducted in compliance with Facility-specific health and safety protocols. TRC's updated Health and Safety Plan for TRC activities at the ARC Site is provided in **Appendix VII** and includes COCs and hazard evaluation. Health and Safety Plans will also be needed by others that the address potential exposure pathways and COCs associated with planned work at the Site.

7.0 REFERENCES

ENVIRON International Corporation. 2012. *RCRA Facility Investigation Baseline Risk Assessment*. Atlantic Research Corporation Facility, Gainesville, Virginia. November 2, 2012.

ENVIRON International Corporation. 2013. *RCRA Facility Investigation Soil Interim Measures Project Completion Report*. Atlantic Research Corporation Facility, Gainesville, Virginia. July 26, 2013.

Geosyntec Consultants. 2011a. Soil Interim measures (IM) Work Plan. Atlantic Research Corporation Facility, Gainesville, Virginia. March 2011.

Geosyntec Consultants. 2011b. *Thermal Treatment Facility, Closure Final Report*. Atlantic Research Corporation Facility, Gainesville, Virginia. November 30, 2011.

Geosyntec Consultants. 2011c. *Evaluation of Potential for Off-Site Migration of Contaminants in Groundwater and Surface Water at the Atlantic Research Corporation Gainesville, VA Facility*. EPA ID No. VAD 023741705. Memorandum from Julie Konzuk, Ph.D., P.Eng. to Erich Weissbart, P.G. December 22.

Geosyntec Consultants. 2012b. *Addendum to the Draft Final SRFI Report*. Atlantic Research Corporation Facility, Gainesville, Virginia. September 2012.

Integral Consulting Inc., 2016. *Human Health Risk Assessment Addendum – Newly Collected Perchlorate Soil Data Analysis and Overall HHRA Findings*. Atlantic Research Corporation RCRA Corrective Action Site, Gainesville, Virginia. July 29, 2016.

SCS Engineers, 2018. *Soil Management Status Report*, Former ARC Facility, Gainesville, Virginia. September 6, 2018.

TRC Environmental Corporation. 2015. *Sampling and Analysis Plan*. Atlantic Research Corporation RCRA Corrective Action Site, Gainesville, Virginia. July 9, 2015.

TRC Environmental Corporation. 2017. *Groundwater Monitoring and Well Reduction Plan*. Atlantic Research Corporation RCRA Corrective Action Site, 5945 Wellington Road, Gainesville, Virginia 20155. July 18, 2017.

TRC Environmental Corporation. 2018. *Sampling and Analysis Report Calendar Year 2017*. Atlantic Research Corporation RCRA Corrective Action Site, Gainesville, Virginia. March 28, 2018.

United States Environmental Protection Agency. 2012a. *Evaluation of Potential for Off-Site Migration of Contaminants in Groundwater and Surface Water at the Atlantic Research Corporation Gainesville, VA Facility. EPA ID No. VAD 023741705*. Memorandum from Erich Weissbart to Brian Buniva. March 13, 2012.

United States Environmental Protection Agency. 2016. *Approval of Human Health Risk Assessment*. Letter from Erich Weissbart to Brian Buniva. October 20, 2016.

Virginia Water Quality Standards. 2011. Virginia Administrative Code 25-260. January 2011.

FIGURES

Gainesville Parcel

Sharpless Parcel

Location Overview

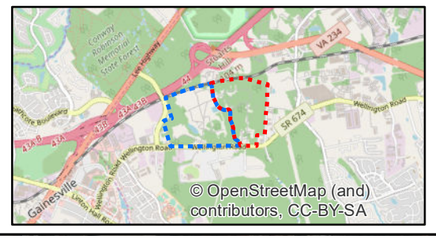

Site Features

- Gainesville Parcel
- Sharpless Parcel

500 250 0 500 Feet

N

Site Location Map

Atlantic Research Corporation, Gainesville, Virginia

TRC Environmental Inc.
11231 Cornell Park Drive
Cincinnati, Ohio 45242

Figure 1

Project: 229931.0000.0000 | 10/2/2018

G:\GIS_Projects\GIS_EEQUA\Gainesville\MXD\CMP\CMP-F01-20180227b.mxd

N

Location Overview

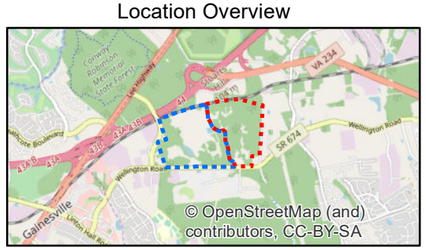

Legend

- Residential Perchlorate Polygons
- Residential Direct Contact Polygons
- Sharpless Parcel
- Gainesville Parcel

500 250 0 500 Feet

Notes:

Gainesville Associates excavated soil polygons on the Sharpless Parcel (SCS Engineers, 2018) [not shown].
Map based on Integral draft from 11/2/2017, which noted that residential direct contact soil management areas are derived from Figure 4-1E of the Baseline Human Health Risk Assessment for the Site (Environ 2012), and polygon shapefile provided by Integral (12/12/2018).
TRC grouped polygons and clarified some boundaries previously hidden by roads, buildings, and water.
Shapefile for the defined polygons will be submitted to USEPA separately.

Defined Polygons That May Require Soil Management at The Site

Atlantic Research Corporation, Gainesville, Virginia

TRC Environmental Inc.
11231 Cornell Park Drive
Cincinnati, Ohio 45242

Project: 229931.0000 | **12/13/2018**

Figure 2

G:\GIS_Projects\GIS_SEQUA\Gainesville\MXD\20181129 Polygons\Soil Polygons_20181212a.mxd

Location Overview

N

DW-32I
DW-29 S
DW-72B
DW-26 I
IW-6
DW-76-01
DW-28 I/D
BW TTU-03D
DW-13
(NDTS Ext Well)
SW 74-07
DW-15
BW 45-03 S
BW 14-02S
DW-18
SW 5-04
SW 40-07A
SW 40-57
BW 28-02S
BW-28-04 D
SW 47-02

Legend

VISL Vapor Intrusion Screening Level

- Exceedance of Groundwater VISL
- Vapor Mitigation Requirement Area
- Sharpless Parcel
- Gainesville Parcel

Notes: Vapor Intrusion Screening Level Calculator, Based on USEPA Residential Vapor Intrusion Screening Levels (May 2018) and EPA's Vapor Intrusion Screening Level (VISL) Calculator User's Guide for Chemical Contaminants (May 2018). The VISL values are the lower of the screening levels calculated at either a target cancer risk of 1E-5 or a target hazard quotient of 1. VISL screening analysis and screening values include:

PCE - 57.6 ug/L	12DCA - 22.4 ug/L	Benzene - 15.9 ug/L
TCE - 5.18 ug/L	11DCE - 195 ug/L	
11DCA - 76.4 ug/L	Vinyl Chloride - 1.47 ug/L	

Locations based on analysis of monitoring well sample depth and historical concentrations. Includes approximate 100 feet buffer around locations.
Labels indicate current sampling locations per the 2017 Groundwater Monitoring and Well Reduction Plan.
Shapefile for the defined area will be submitted to USEPA separately.

500 250 0 500
Feet

Defined Area That May Require Vapor Intrusion Mitigation at the Site
Atlantic Research Corporation, Gainesville, Virginia

TRC Environmental Inc.
11231 Cornell Park Drive
Cincinnati, Ohio 45242

Figure 3

Project: 229931.0000 | **12/13/2018**

G:\GIS Projects\GIS_SEQUA\Gainesville\MXD\CMP-F03_VISL_20181212A.mxd

APPENDIX I

MANAGEMENT PLAN

MANAGEMENT PLAN

SUBMITTED TO USEPA REGION III

By

Atlantic Research Corporation
5945 Wellington Road
Gainesville, Virginia 20155

October 3, 2018

Prepared By:

TRC Environmental Corporation
11231 Cornell Park Drive
Cincinnati, Ohio 45242
T: 513-489-2255

TABLE OF CONTENTS

1.0 INTRODUCTION 1

2.0 SITE ACCESS AND SECURITY 1

3.0 MANAGEMENT RESPONSIBILITIES 1
3.1 ARC Project Team 2
3.2 TRC Project Team 3
3.3 Contractors/Subcontractors 3
3.4 Gainesville Associates Project Team Members 4
3.5 Sharpless Project Team Members 4

4.0 IMPLEMENTATION SCHEDULE 5

List of Figures

1: Site Location

ACRONYMS

ARC	Atlantic Research Corporation
CMI	Corrective Measures Implementation
HAS Plan	Health and Safety Plan
LLC	Limited Liability Company
O&M	Operation and Maintenance
RCRA	Resource Conservation and Recovery Act
TRC	TRC Environmental Corporation
USEPA	United States Environmental Protection Agency
VDEQ	Virginia Department of Environmental Quality

1.0 INTRODUCTION

This Management Plan is part of the Corrective Measures Implementation ("CMI") Plan for the former Atlantic Research Corporation ("ARC") facility located at 5945 Wellington Road, Gainesville, Virginia 20155 ("Facility" or "Site"). The Facility has undergone RCRA Corrective Action to address soil and ground water impacts from the historic management of hazardous substances including perchlorate, volatile organic compounds, semi-volatile organic compounds, metals, energetic compounds, and polychlorinated biphenyls at the Site.

The Site is approximately 416 acres, which is divided into an eastern 181 acres owned by Sharpless Enterprises, LLC (referred to as the Sharpless Parcel; currently undergoing redevelopment) and the western 235 acres owned by Gainesville Associates, LLC (referred to as the Gainesville Parcel; pending redevelopment). See Figure 1 for a map showing the site layout.

Corrective measures are being implemented at the Site under a CMI Order with oversight by USEPA Region III and consist of ongoing ground water remediation, and monitoring, controls restricting the use of ground water, and localized requirements for soil management and vapor mitigation in the event of new building construction.

2.0 SITE ACCESS AND SECURITY

The Site is owned and controlled by the respective owners (Gainesville Associate and Sharpless Enterprises) and ARC has access agreements with both owners to implement corrective measures at the Site.

The perimeter of the Site is fenced. Presently, there is one access point to the Site:

- South Gate (main entrance) – adjacent to Wellington Road

The access point is locked and opened only with a key provided with permission of ARC or Gainesville Associates. Permission to enter the Site is granted though representatives of Gainesville Associates for the western Gainesville Parcel, or Sharpless representatives for the eastern Sharpless Parcel.

As the Site is undergoing redevelopment, access points may change in the future.

All on-Site equipment and material storage areas are secured and stored in a safe manner to protect against injury to potential trespassers.

3.0 MANAGEMENT RESPONSIBILITIES

The primary responsibilities of current and future parties completing corrective measure activities for the Site are identified in detail as they pertain to project control, quality assurance, and Site health and safety.

Regulatory Agencies

The regulatory agencies for the Site are USEPA Region III and the Virginia Department of Environmental Quality ("VDEQ"). USEPA Region III provides regulatory oversight of the RCRA corrective actions at the Site. VDEQ provides regulatory input on other Commonwealth matters, as warranted, as they relate to the Site. USEPA has posted materials on-line at the USEPA Region 3 Mid-Atlantic Corrective Action Sites (community involvement information) Web site http://www.epa.gov/reg3wcmd/ca/va.htm, which also provided agency contact information for the Site.

RCRA Corrective Action Implementation

ARC has the responsibility for implementation of the RCRA corrective actions at the Site. On behalf of ARC, TRC Environmental Corporation (TRC) will coordinate, manage/oversee, and implement the corrective measures described in the CMI Plan for areas of the Site, for which it is given access and responsibility.

Property Ownership, Access, and Redevelopment

Gainesville Associates, LLC owns the western Gainesville Parcel of the Site, which it is in the process of redeveloping. Gainesville Associates is responsible for site security, access, and complying with the ground water use restriction, soil management requirements, and vapor mitigation requirements of the CMI Plan with respect to redevelopment of the Site.

Sharpless Enterprises, LLC owns the eastern Sharpless Parcel of the Site, which it is in the process of redeveloping with the assistance of Gainesville Associates, LLC. Sharpless Enterprises, LLC (through Gainesville Associates, LLC) is responsible for site security, access, and complying with the ground water use restriction, soil management requirements, and vapor mitigation requirements of the CMI Plan with respect to redevelopment of the Site.

The identified responsibilities below reflect the current situation with respect to ARC and TRC's management of the ongoing Operation and Maintenance ("O&M") and sampling programs on the Gainesville property.

3.1 ARC Project Team

Mr. Brian Buniva is the Project Coordinator on behalf of ARC. Mr. Buniva has the overall responsibility for achieving the project objectives and is responsible for monitoring project progress, identifying project goals, and reviewing project schedules. Mr. Buniva's business address and telephone number are:

Brian L. Buniva, Esq.
B.L. Buniva Strategic Advisor, PLLC
919 E. Main Street; Suite 1300
Richmond, Virginia 23219
(804) 873-0610
Brian_Buniva@sequa.com

3.2 TRC Project Team

TRC has served as the primary environmental contractor at the Site since 2014. TRC will continue to coordinate, manage/oversee, and implement the corrective measures described in the CMI Plan for areas of the Site for which it is given access and responsibility. However, other areas of the Site fall under the responsibility of those parcel users or owners such as for the Sharpless Parcel since 2017, which is undertaking re-development without active involvement from TRC or ARC. In this case, the Sharpless personnel or contractors would need to be identified as the project members.

TRC's professional technical staff will assist in performing the required tasks associated with the CMI Plan. Each member of the TRC project staff is responsible to the project management team for completion of assigned project activities.

Members of the project staff are responsible for understanding and implementing the Site plans including the Health and Safety Plan ("HAS Plan") as they apply to their project activities. Additionally, TRC is responsible for providing its subcontractors with field direction. Under TRC policy, all field staff hold the authority to stop work at any time they feel necessary for health and safety related issues. Other field responsibilities for TRC include project oversight, project documentation, and project communication.

The TRC project team's professional staff and contact information are as follows:

Mr. Dan Weed, Project Director
Mr. Geoffrey King
Mr. Michael Woodruff
Mr. James Kirlin
Mr. Curtis Kugler

TRC Environmental, Inc.
11231 Cornell Park Drive
Cincinnati, Ohio 45242
Phone: 513.489.2255

DWeed@trcsolutions.com
GKing@trcsolutions.com
MWoodruff@trcsolutions.com
CKugler@trcsolutions.com

TRC Environmental, Inc.
50 International Drive, Suite 150
Greenville, South Carolina 29615
Phone: 864.421.3890

JKirlin@trcsolutions.com

3.3 Contractors/Subcontractors

Subcontractors are responsible for their employees and are expected to follow the procedures outlined in the HAS Plan regarding subcontractor responsibilities. The following subcontractor is currently engaged to complete activities at the Site:

- Environmental Systems Service, Ltd. (ESS) of Virginia – ESS serves as the subcontractor for O&M of the Northern Deep Treatment System at the Site.

  Environmental Systems Service, Ltd.
  218 North Main Street
  Culpeper, Virginia 22701
  Phone: 540.825.6660
  CodyH@ess-services.com

3.4 Gainesville Associates Project Team Members

Gainesville Associates is the property owner for the western parcel. ARC or its contractors will request access to the property as needed to access the Site.

Mr. Walter E. Lynch
Walter E. Lynch AIA PLLC
1058 Thomas Jefferson Street, NW
Washington, D.C. 20007
Phone: 703-407-0777
wlynch@walterlynchaia.com

Michael W. McLaughlin, Esq., P.E.
SCS Engineers
11260 Roger Bacon Drive; Suite 300
Reston, VA 20190
Phone: 703-628-6258
MMcLaughlin@scsengineers.com

3.5 Sharpless Project Team Members

Sharpless is the property owner for the eastern (Sharpless) parcel. ARC or its contractors will request access to the property as needed to access the Site.

It is ARC's understanding that requests for access to the Sharpless property shall be made through legal counsel of Sharpless at the law firm of Troutman Sanders in Richmond, VA. It is ARC's understanding that any environmental remedial work performed on the Sharpless parcel (other than performing ground water monitoring by ARC) will be performed by Gainesville Associates and SCS Engineers.

Contact for Sharpless Enterprises, LLC is through:

Mr. Carl Bivens, Esq.
Troutman Sanders LLP
1001 Haxall Point, 15th Floor
Richmond, Virginia 23219
Phone: 804-697-1314
carl.bivens@troutmansanders.com

4.0 IMPLEMENTATION SCHEDULE

- Ground water remediation – ongoing
- Soil management – as needed
- Vapor intrusion mitigation – as needed
- Ground water use restriction – in progress, request for deed restriction has been made of Gainesville Associates and Sharpless Enterprises, LLC. The request will be renewed when ARC notifies Gainesville Associates of its intent to terminate its lease of the Facility.

FIGURE

Main Entrance on
Wellington Road

Location Overview

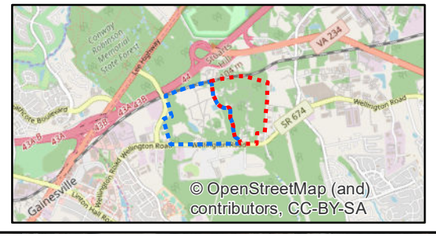

Site Features

- Gainesville Parcel
- Sharpless Parcel

500 250 0 500
Feet

N

Site Location

Atlantic Research Corporation, Gainesville, Virginia

TRC Environmental Inc.
11231 Cornell Park Drive
Cincinnati, Ohio 45242

Figure 1

Project: 229931.0000.0000

9/28/2018

G:\GIS_Projects\GIS_SEQUA\Gainesville\MXD\2018_Vor\MP-F01_20180924o.mxd

APPENDIX II

COMMUNITY RELATIONS PLAN

COMMUNITY RELATIONS PLAN

SUBMITTED TO USEPA REGION III

By

Atlantic Research Corporation
5945 Wellington Road
Gainesville, Virginia 20155

Project No. 229931.0001

October 3, 2018

Prepared By:

TRC Environmental Corporation
11231 Cornell Park Drive
Cincinnati, Ohio 45242
T: 513-489-2255

TABLE OF CONTENTS

1.0 OVERVIEW OF PLAN 1

2.0 CONTACTS WITH THE COMMUNITY, PUBLIC, OR GOVERNMENT 1

3.0 REPORTING 1

1.0 OVERVIEW OF PLAN

This Community Relations Plan describes the community outreach and notification activities during implementation of corrective measures at Atlantic Research Corporation's former facility, which is leased from Gainesville Associates, and located at 5945 Wellington Road, Gainesville, Virginia 20155 ("Site"). The Site is approximately 416 acres, which is divided into approximately the eastern 181 acres acquired by Sharpless Enterprises, LLC (referred to as the Sharpless Parcel) and the western 235 acres (referred to as the Gainesville Parcel).

The purpose of this plan is to provide a mechanism for the community, government officials, and other interested citizens to be informed of on-Site activities related to implementation of corrective measures for the Site. This plan is part of the Corrective Measures Implementation Plan for the Site.

2.0 CONTACTS WITH THE COMMUNITY, PUBLIC, OR GOVERNMENT

Interactions with the local community, public interest groups, and/or Virginia state officials related to the Resource Conservation and Recovery Act (RCRA) Corrective Action Program are accomplished through the sharing of documents at an information repository at the Prince William County Library.

Information Repository
Prince William County Library
8601 Mathis Avenue
Manassas, VA 20110

Public participation will continue through the use of the information repository. In addition, U.S. EPA has also posted materials on-line at the USEPA Region 3 Mid-Atlantic Corrective Action Sites Web site http://www.epa.gov/reg3wcmd/ca/va.htm.

3.0 REPORTING

Any concerns or questions related to the Site expressed by the public may be reported to the United States Environmental Protection Agency at the preceding website.

APPENDIX III

OPERATION AND MAINTENANCE PLAN

OPERATION AND MAINTENANCE PLAN
GROUNDWATER REMEDIATION SYSTEM

SUBMITTED TO USEPA REGION III

By

Atlantic Research Corporation
5945 Wellington Road
Gainesville, Virginia 20155

Project No. 229931.0001

October 3, 2018

Prepared By:

TRC Environmental Corporation
11231 Cornell Park Drive
Cincinnati, Ohio 45242
T: 513-489-2255

TABLE OF CONTENTS

1.0 INTRODUCTION 1

2.0 PURPOSE AND OBJECTIVES 1

3.0 ROLES AND RESPONSIBILITIES 2

4.0 HEALTH AND SAFETY 3
4.1 Site Specific Hazards 3
4.2 NDTS Specific Hazards 4

5.0 REMEDY DESCRIPTION – EQUIPMENT AND COMPONENTS 4
5.1 Description of Operations 5
5.2 Main System Equipment 5
5.2.1 Extraction Well System – DW-13 Pump Shed (Building 73B) 5
5.2.2 Main Treatment Building (Building 72C) 6
5.2.3 EVO Injection System 8
5.2.4 Injection Well System – IW-8 Shed 9
5.3 Ancillary Equipment 9

6.0 NORMAL OPERATIONS 9
6.1 Typical Operational Ranges 9
6.2 Operating Procedures 10
6.2.1 Maintaining Flow 10
6.2.2 Bag Filter Replacement 11
6.2.3 EVO System 12
6.3 Start-Up and Shutdown Procedures 12
6.3.1 Shut-Down Procedures 12
6.3.2 Start-Up Procedures 12
6.4 System Routine and Preventive Maintenance 13
6.4.1 Procedures 13
6.4.2 Supplies and Spare Parts 13
6.5 System Adjustments 14
6.6 Housekeeping 14

7.0 TROUBLESHOOTING AND CORRECTIVE MAINTENANCE 15
7.1 General Troubleshooting 15
7.1.1 Loss of Power 15
7.1.2 Reduced or Complete Loss of Flow from Extraction Well Pump 15

Table of Contents (cont.)

7.1.3 Reduced or Complete Loss of Flow from Transfer Pump 15
7.1.4 Elevated Pressure in Lines from Extraction Well 16
7.1.5 Elevated Pressure in Injection Lines 16
7.1.6 Lack of EVO Flow 16
7.2 Emergency Response 16
7.2.1 Equalization Tank Overflowing 17
7.2.2 System Line Breakage 17
7.2.3 Vandalism or Damage to System 17
7.3 System Repairs 17

8.0 SYSTEM MONITORING AND SCHEDULE 18
8.1 Weekly General Area Inspections 18
8.2 Operational Monitoring 19
8.2.1 Weekly Manually Read Instruments and Values 19
8.2.1.1 Extraction Well DW-13 Shed 19
8.2.1.2 Main Treatment Building 19
8.2.1.3 Injection Well IW-8 Shed 20
8.2.1.4 EVO System 20
8.2.2 Weekly PLC Data Downloads 20

9.0 DOCUMENTATION AND REPORTING 21
9.1 Documentation 21
9.2 Reporting 21

10.0 REFERENCES 21

List of Figures

1: Site Layout Map
2: NDTS Process Flow Diagram

List of Appendices

I: Vendor Equipment Documentation
II: Supplier Information
III: Examples of System Documentation Forms

ACRONYMS

ARC	Atlantic Research Corporation
CMI	Corrective Measures Implementation
CMI Order	Corrective Measures Implementation Order
CMI Plan	Corrective Measures Implementation Plan
COC	Constituent of Concern
DW	Deep Well
ft	feet
Geosyntec	Geosyntec Consultants Inc.
HAS Plan	Health and Safety Plan
HHRA	Human Health Risk Assessment
IW	Injection Well
MCL	Maximum Contaminant Level
NDTS	Northern Deep Treatment System
O&M	Operation and Maintenance
RCRA	Resource Conservation and Recovery Act
SRFI	Supplemental RCRA Facility Investigation
TRC	TRC Environmental Corporation
USEPA	United States Environmental Protection Agency
VOCs	Volatile Organic Compounds

1.0 INTRODUCTION

This Operation and Maintenance Plan ("O&M Plan") outlines O&M procedures and protocols for the groundwater remediation system at the former Atlantic Research Corporation ("ARC") facility located at 5945 Wellington Road, Gainesville, Virginia 20155. The O&M Plan is part of the updated Corrective Measures Implementation Plan ("CMI Plan"), which addresses the final remedy for the ARC facility under the October 20, 1992 Final Administrative Order on Consent for Corrective Measures Implementation ("CMI Order").

Since 1992, ARC has implemented the CMI Plan in various phases, and has documented the results in various reports including work plans, supplemental site investigation, risk assessment, and interim measure reports, and other documents that have been reviewed and approved by the United States Environmental Protection Agency ("USEPA"). The implementation of the CMI Plan has resulted in the remediation of hazardous substances on the Site including perchlorate, volatile organic compounds, semi-volatile organic compounds, metals, energetic compounds, and polychlorinated biphenyls present in soil, groundwater, surface water, and sediment.

The former and existing groundwater remediation system has been in place since 1987 and has been updated periodically to enhance its effectiveness (i.e., most recently in 2009). Operation of this system (referred to as the Northern Deep Treatment System ["NDTS"]) has prevented the off-site migration of constituents of concern ("COCs") above maximum contaminant levels ("MCLs") and risk-based concentrations and will continue under the approved and updated Sampling and Analysis Plan (TRC, 2015) and Groundwater Monitoring and Well Reduction Plan (TRC 2017), which governs monitoring groundwater and surface water at the Site.

2.0 PURPOSE AND OBJECTIVES

The purpose of this O&M Plan is to describe the NDTS and its operation and maintenance procedures as well as the monitoring and recordkeeping requirements.

This plan will aid operators in performing the following functions:

1. Establishing the NDTS components;
2. Operation of the NDTS;
3. Performance of Preventive Maintenance;
4. Performance of Troubleshooting and Corrective Repairs;
5. Inspections and Monitoring; and,
6. Documentation and Recordkeeping.

3.0 ROLES AND RESPONSIBILITIES

This O&M Plan is Appendix III of the CMI Plan. TRC manages implementation of the O&M Plan at the Site on behalf of ARC.

A Management Plan documenting the management strategy, key personnel, and responsibilities for implementation is included as Appendix I of the CMI Plan.

The following contacts are responsible for implementation of the O&M Plan.

- **NDTS Operation and Maintenance Manager:** The MDTS Operation and Maintenance Manager is responsible for implementation of the O&M Plan for the NDTS. Responsibilities include ensuring that a site operations team is in place, coordinate maintenance and system repairs, and be available for coordinating troubleshooting abnormal conditions.

  TRC
  Mr. James Kirlin, P.E.
  50 International Drive, Suite 150
  Greenville, SC 29615
  864.421.3890
  JKirlin@trcsolutions.com

- **ARC Site Project Manager:** The Site Project Manager is responsible for preparing the budget and schedule for site activities, support the system team to ensure the work is performed safely, within budget and in a timely manner. This person also works with the NDTS operations and maintenance manager to make adjustments, plan improvements, and schedule monitoring events.

  TRC
  Geoff King, C.P.G, Senior Project Manager / Geologist
  11231 Cornell Park Drive
  Cincinnati, OH 45242
  513.489.2255
  GKing@trcsolutions.com

- **Operators and Maintenance Supervisor:** The operations supervisor is responsible for ensuring operational staff perform required inspections, operations, and maintenance activities. Other responsibilities include performing pre-work reviews, job hazard analyses, walkdowns with operations team members, ensuring operations team members are properly training in operations, maintenance requirements, health & safety requirements, and environmental requirements. Coordination with site management for troubleshooting and system repairs and providing necessary PPE equipment is also the responsibility of the operations supervisor.

Environmental Systems Service, Ltd
Sean Minavio, Project Manager
218 North Main Street
Culpeper, VA 22701
540-825-6660
seanm@ess-services.com

4.0 HEALTH AND SAFETY

TRC's Site Health and Safety Plan ("HAS Plan") contains site-wide requirements and guidance for the performance of site remedial tasks and functions. The HAS Plan governs safe performance of site activities. It also governs personnel safety training requirements, control of recognized health and safety hazards, use of personal protective equipment, facility access requirements, and contingencies (e.g., fire, spills, accidents, personnel injuries, and incident reporting). Other sources should be referenced for health and safety concerns related to the NDTS, including equipment manuals and standard industry practices governing work in industrial settings, industrial safety, maintenance, and waste handling. Important points of safety are summarized in the following subsections. The Site HAS Plan also contains information related to emergency response, such as response equipment, procedures, contacts, locations, etc.

4.1 Site Specific Hazards

The following potential hazards are addressed in the TRC HAS Plan for observation of NDTS O&M activities:

- Biological Hazards (snakes, ticks, mosquitoes, spiders, etc.)
- Illumination concerns
- Adverse weather
- Dust
- Excavations and open pits
- Portable ladders / elevated work
- Manual lifting
- Chemical hazards (EVO, lubricants, oils, potential contaminants of concern, etc.)
- Compressed gases (propane)
- Heat and cold stress
- Waste control
- Electrical hazards
- Fire hazards
- Pinch points
- Hand tools / lawn care equipment
- Standing water
- Building demolition

- Walking/work surfaces (slip, trip, and fall)
- Motor vehicles (operations around, parking, driving)
- Noise
- Forklifts / heavy equipment
- Pressurized lines
- Hot surfaces (heaters, flame)
- Mechanical hazards (rotating equipment)

4.2 NDTS Specific Hazards

The following requirements should be followed when conditions merit.

- Lock Out/Tag Out Procedures when opening electrical panels and pumps
- Confined Space Entry – absolutely no confined space entry (permitted confirmed space or non-permitted) without prior written authorization from project management
- Electrical work – no electrical work shall be performed without written authorization from project management. Panels shall be de-energized prior to opening unless otherwise authorized by project management
- Fall Protection – safety harnesses, approved scaffolding, secured ladders, etc. must be utilized if work above four feet above local floor or near open pits or trenches is performed
- Respiratory Protection – areas shall not be accessed if respiratory protection is required without written prior authorization from project management
- Insect Repellent – insect repellent shall be worn at all times onsite during months where insect activity (e.g. ticks, mosquitoes, etc.)
- PPE – proper PPE must be worn for the tasks being performed (e.g. face shield / safety glasses when changing filter bags; long pants, sleeves, and face shield when using the weed string trimmer, safety glasses and cut resistant gloves at all times, etc.)
- Hazard Communication – no new chemicals are allowed onsite without written authorization, have SDSs available for all site materials, understand where SDSs are maintained
- Project Communication – the site is remote, having communication with others is important, establish procedures for routine check-ins and what to do if a check-in is missed

5.0 REMEDY DESCRIPTION – EQUIPMENT AND COMPONENTS

The NDTS consists of the following main components:

- An extraction well and pump;
- A main treatment building containing particle filtration, Emulsified Vegetable Oil (EVO) amendments to reinjected groundwater, and injection pumps; and
- An injection well.

5.1 Description of Operations

The system is designed to capture and treat groundwater to reduce the mass of perchlorate and volatile organic compounds ("VOCs"). This is accomplished through extraction, treatment through addition of an electron donor (Emulsified Vegetable Oil, EVO), and reinjection of amended water upgradient to promote bioremediation of perchlorates and VOCs in the aquifer and to promote flow-path control.

The former and existing groundwater remediation system has been in place since 1987 and has been updated periodically to enhance its effectiveness (i.e., most recently in 2009). Operation of this system has prevented the off-site migration of COCs above MCLs and risk-based concentrations and will continue under the approved and updated Sampling and Analysis Plan (TRC, 2015) and Groundwater Monitoring and Well Reduction Plan (TRC 2017), which governs monitoring groundwater and surface water at the Site (provided in Appendix IV of the CMI Plan).

The NDTS was designed to treat up to 80 gallons per minute (gpm) and currently treats 40 to 60 gpm. The site layout of the treatment system is presented on Figure 1. A process flow diagram is provided as Figure 2.

Extraction well D-13 is used to withdraw groundwater from the aquifer. The extracted groundwater is pumped to the main treatment building where it first undergoes filtration to remove fine particulate matter. After filtration, the groundwater then flows into an equalization tank. After the tank, EVO is added prior to reinjection upgradient.

Two Programmable Logic Controllers (PLCs) control the NDTS operations based on communications from key instruments and the status of operation equipment throughout the system.

5.2 Main System Equipment

This subsection provides detailed information for the main equipment utilized in the NDTS. Additional information for the equipment is provided in Appendix I, such as equipment manuals, information sheets, brochures, etc. referenced as the attachment in Appendix I, e.g. Appendix I-1.

5.2.1 Extraction Well System – DW-13 Pump Shed (Building 73B)

- **Well DW-13 (EW-101):** Well DW-13 is used to extract groundwater from the deep aquifer. It is a 8-inch well drilled to a depth of 350-feet (ft) below ground surface (bgs). Steel casing is set and tremie grouted to 34.5-ft bgs, and the well is left open below that. This well is in the DW-13 shed.

- **Well Submersible Pump and Motor (P-101):** A Grundfos Model 85S100-9 submersible pump with a Franklin 10-HP, 230-volt 3-phase motor is used to extract groundwater. The pump is set at approximately 252-ft bgs. The pumping rate averages 40 to 50 gpm. Piping up the well from the pump consists of 2-inch steel pipe. See Appendix I-1 for pump information and I-2 for motor information.

- **Well Pump Motor Variable Frequency Drive:** A Lenze AC Tech SMVector (type: ESV75N02TXB) frequency inverter (variable frequency drive, VFD) drive controls the well pump motor with signal from the main system PLCs. See Appendix I-3.

- **Transformers:** Two General Purpose Acme Transformers, T-1-81052 Style SR, 750 kVA 50/60 Hz, 1 Phase, (handwritten S714 or 5714) are used to step down voltage for the well pump. See Appendix I-4.

- **Disconnection Switch:** A Square D General Duty Safety Switch (60A, 240 Vac, 3PH, 240V) power disconnect switch is provided to disconnect power to the VFD and pump motor.

- **Line Reactor:** A Trans-Coil, Inc. (TCI) three-phase line reactor (Model KLRH35BTB2) is installed to protect the pump motor from current and voltage distortion created by the pump VFD. See Appendix I-5.

- **Well Pressure Transducer (LT-101A, PT-101A):** In-Situ, Inc. PXD-261 well pressure transducer is installed in the well to provide well water level data to the PLC. See Appendix I-6.

- **Well Water Meter/Totalizer:** A 2-inch Master Meter Model MM7T threaded 2-inch, 10-gallon pulse water meter is used as a totalizer for gallons pumped from well. This meter is only a local/manual display meter and does not transmit a signal. See Appendix I-18.

In addition to the equipment listed in this building, there is also an ancillary manual-read pressure gauge on the line carrying extracted groundwater.

5.2.2 Main Treatment Building (Building 72C)

- **Incoming Groundwater Flowrate Indicator and Transmitter (FIT-101):** A Signet 515 Rotor-X Paddlewheel Flow Sensor is used to measure the incoming groundwater flow rate from the well to the main treatment building. A Signet 8550 Flow Transmitter provides a local display of flow and transmits the flow signal to the system PLCs. See Appendix I-19.

- **Incoming Groundwater Line Pressure Indicator/Transmitter (PIT-101B):** A Signet 2450 Pressure Sensor is used to measure the pressure in the incoming groundwater flow just ahead of the bag filters. A Signet 8450 Pressure Transmitter provides a local display of pressure and transmits the flow signal to the system PLCs. See Appendix I-20.

- **Particle Bag Filters (F-201):** There are two steel, single bag filter housings operated in parallel used to remove particulate matter. The filters use Model 88-30 (size 8-in x 30-in) filter bags. 50-micron polyester felt bags are typically used. The filters have manual-read pressure gauges mounted on the incoming and discharge lines to the filters for measuring pressure loss across the filters (PI-201A/201B).

- **Former Granulated Activated Carbon Filters (C-301):** There are two 6-feet tall by 6-foot diameter vessels used for granulated activated carbon (GAC) adsorption previously used at the site for removal of VOCs. Each carbon filter holds approximately 5,000 pounds of GAC. The carbon filters are no longer an official part of the NDTS and only remain inline due to the cost of dismantling and removing them from service.

- **Equalization Tank:** A 5,000-gallon Equalization Tank is used to hold water prior to re-injection. This tank is a steel, 8-foot diameter by 14-foot tall tank. It sits just outside and to the east of the main treatment building, Building 72C. The tank has an attached ladder and access manway at the top.

- **Equalization Tank Water Level Indicator (LE/LT 402):** A Echotouch Model LU20 ultrasonic level indicator is used to measure the water level in the Equalization Tank. It transmits the signal to the system PLCs. This signal is not used by the PLCs to control pumps and only used for logging tank water levels. See Appendix I-7.

- **Transfer Pump and Motor (P-402 & M-402):** An Aurora Model 344A end suction centrifugal pump is used to transfer water from the Equalization Tank to the injection well ("IW"), IW-8. The cast-iron, bronze fitted pump has a 10-HP, 3550 RPM 3/60/230/460 TEC 215 T frame WEG premium efficiency motor. See Appendix I-8.

- **Transfer Pump VFD:** An Altivar 31 Model no. ATV31HU75N4 adjustable speed controller is used to start and stop the transfer pump as well as control the pump speed. It receives signal from the main system PLCs. See Appendix I-9.

- **Transformers and Power Panel:** There are two transformers used to step down power from the power supply for system use. The first is a Square D 30 kVA Dry Type Transformer (EE30T3H, see Appendix I-10) and the second is a Square D 15 kVA Dry Type Transformer (15T3H, see Appendix I-11).

  There is also a power panel enclosure that houses breakers, fuses, and smaller transformers for the PLCs, lighting, outlets, and general usage power.

- **Transfer Pump Discharge Line Pressure Indicator and Transmitter (PIT-701):** A Signet 2450 Pressure Sensor is used to measure the pressure in the Transfer Pump discharge line containing groundwater to be re-injected. A Signet 8450 Pressure Transmitter provides a local display of pressure and transmits the flow signal to the system PLCs. See Appendix I-20.

- **Injection Groundwater Flowrate Indicators and Transmitters (FIT-701, FIT-702):** EVO is injected into the Transfer Pump discharge line after pressure sensor PT-701. After this the EVO injection location, the discharge line splits into to injection lines (8A and 8B) that convey groundwater to the injection well IW-8.

There is a Signet 515 Rotor-X Paddlewheel Flow Sensor installed on each of the injection lines. The flow sensor measures the flow in that specific injection line from the Transfer Pump to IW-8. Each flow sensor is connected to a Signet 8550 Flow Transmitter that provides a local display of flow and transmits the flow signal to the system PLCs. See Appendix I-19.

- **Injection Groundwater Flow Water Meter/Totalizers:** There is a Master Meter Model MM7T threaded 2-inch, 10-gallon pulse water meter installed on each of the injection lines (8A and 8B). These are used as totalizers for gallons pumped from the Transfer Pump through that injection line. These meters are only a local/manual display meters and do not transmit signals to the system PLCs. See Appendix I-18.

- **System Main/Master Control Panel:** The system main control panel is a 48-inch by 36-inch panel. The panel houses the main system power disconnect, the PLCs, relays, system selector switches, system condition lights, etc. The panel is served by 480 volts, 3-phase service. Panel drawings including an enclosure layout, power distribution, and PLC input/output wiring diagrams are provided in Appendix I-12.

- **System Programmable Logic Controllers:** Two EOS Research ProControl Series 2plus PLCs are used to control the system and monitor system processes, data points, and events. The software package, ProView (Version 2.1x) is used to program, access, and communicate with the PLCs. See Appendix I-13 for information on the PLCs and Appendix I-12 for the PLC input/output wiring diagrams.

In addition to the equipment listed above in this building, there are also ancillary manual-read pressure gauges located at several places in the treatment train.

5.2.3 EVO Injection System

The EVO injection system is housed in a CONEX-style shipping container that is located adjacent and south of the Main Treatment Building 72C. EVO is obtained in 275-gallon "ReadyFill" "SPaceKraft lined IBC totes that arrive on a pallet. These totes are then stored in the CONEX container with the EVO equipment.

- **EVP Pumps:** There are two Liquiflo Equipment Co. H3 positive displacement closed coupled, single mechanical seal gear pumps used to inject Emulsified Vegetable Oil (EVO) into the transfer pump discharge line. See Appendix I-14.

- **EVO Pump Drives:** Each EVO pump is controlled with a Lenze SMVector NEMA 1 standard duty inverter drive (type: ESV371N02YXB). It receives signals to start and stop the pump from the system PLCs. See Appendix I-15. The PLC is programmed to turn on the EVO feed pumps for short periods of time at set intervals.

5.2.4 Injection Well System – IW-8 Shed

The injection lines 8A and 8B are conveyed below grade from the main treatment building (72C) to the injection well IW-8 shed. The IW-8 shed provides shelter over the above-grade injection piping and injection well IW-8. The injection lines merge prior to going down into IW-8.

- **Air - Vacuum Release Valves:** There is an A.R.I. D-040 series Combination Air Valve (air/vacuum release valve) on each of the injections lines, 8A and 8B, prior to them merging at injection well IW-8. These valves release or accept air as needed in the line during the filling and draining of the lines when the system is started or stopped and to release small amounts of air that may accumulate when the lines are in use. See Appendix I-16.

There is no electrical power in the IW-8 shed. There are ancillary manual-read pressure gauges and check valves on each injection line before they merge to go down the well.

5.3 Ancillary Equipment

- There are electric space heaters used to protect against freezing for the DW-13 Pumphouse Shed, Main Treatment Building, and in the covered space between the Main Treatment Building and the Equalization Tank.

- There is also a 100-gallon liquid propane storage tank installed outside of the IW-8 Injection Well shed that serves a Mr. Heater 18,000 BTU space hear inside the shed that provides freeze protection for the exposed piping. Manufacturer's information for the space heater is provided in Appendix I-17.

6.0 NORMAL OPERATIONS

Earth moving activities, including excavation, drilling and construction activities, shall be conducted in compliance with Facility-specific health and safety protocols. TRC's updated Health and Safety Plan for TRC activities at the ARC Site is provided in Appendix VII. Health and Safety Plans will also be needed by others that the address potential exposure pathways associated with planned work at the Site.

6.1 Typical Operational Ranges

In general, system equipment should be operated within the manufacturer's recommended operated ranges found in the information provided in Appendix I. Typical operating conditions for the NDTS are provided below.

- **DW-13 Well Head Pressure (Manual Read Gauge):** Pressure in the well pump discharge line at the well head is typically greater than 20 pounds per square inch-gauge (psi) and increases with flow. Pressures as high as 60 psi have been experienced during flow rates greater than 70 gpm, but typically settle to 20-45 psi proportionally for flow rates from 40-65 gpm. Pressures trending outside of this range for these flows is not typical.

- **Extracted Groundwater Flow Rate (FT-101):** The extracted groundwater flow rate should be greater than 40 gpm for typical operations. Flow rates as high as 70-80 gpm are acceptable and expected if the system has been down for an extended period. Flow rates less than 40 gpm indicate an issue, such as well pump fouling, pipe restrictions, bag filter clogging, incorrect VFD setting, electrical issue, or incorrect valve setting, etc.

- **Extracted Groundwater Flow Pressure (PT-101B):** Extracted groundwater flow pressure just ahead of the bag filters is typically greater than 10 pounds per square inch-gauge (psi) and increases with flow. Pressures as high as 40 psi have been experienced during flow rates greater than 70 gpm, but typically settle to 6-20 psi proportionally for flow rates from 40-65 gpm. Pressures trending outside of this range for these flows is not typical.

- **Bag Filter In/Out Pressures (PI-208A/208B- manually read gauges):** The bag filter inlet pressures for filters A and B should match the extracted groundwater flow pressure meter PT-101B. Outlet pressures from the bag filters will be lower than the inlet pressures. Typical outlet pressures range from 5-15 psi. The difference between the two will increase as the bag filters become clogged. If the difference in pressure between the inlet and outlet gauges reaches 15 psi the bag should be changed.

- **Transfer Pump Discharge Line Pressure (PIT-701):** The transfer pump operates intermittently as called for by the system PLCs based on water level in the Equalization Tank. When running, the discharge line pressure from the transfer pump is typically in the range of 40-82 psi.

- **Groundwater Injection Lines Flow Rate (FIT-701/702):** The transfer pump typically pumps in the range of 30-100 gpm and is proportional to the water level in the Equalization Tank.

6.2 Operating Procedures

Refer to the equipment manufacturer's information found in Appendix I for equipment specific operation procedures. General site specific operating procedures for the NDTS are provided below.

6.2.1 Maintaining Flow

The goal of the NDTS is to capture and treat groundwater to reduce the mass of COCs in the groundwater; therefore, maintaining normal operation of the extraction well and transfer pumps is important to accomplishing that goal. Both the extraction well pump and transfer pump should start and stop depending on water level in the Equalization Tank. As water levels rise in the Equalization Tank, the transfer pump will start and if water level continues to an even higher set point, the extraction well pump will stop. Conversely, as the water level in the tank drops, the extraction pump will start and if the water level drops even further to the next set point, the transfer pump will stop. The system should be set up such that the DW-13 well pump flow rate is slightly lower than the transfer pump flow rate so that the Transfer Pump should start and stop during normal operations while the DW-13 extraction well pump runs more continuously.

The speed of the extraction well and transfer pumps can be controlled with local VFDs. If the frequency of either is adjusted, flows should be checked by both the Signet flow meters and the manual read water totalizers.

6.2.2 Bag Filter Replacement

As the bag filter captures more sediment, the pressure difference between the inlet and outlet will increase to the point of requiring bag replacement. If the difference in pressure between the inlet and outlet gauges reaches 15 psi the bag should be changed.

1. Make sure proper PPE is worn (i.e. safety glasses (or face shield) and cut-resistant gloves).
2. Open the bag filter system bypass valve. This valve must be open before closing the filter isolation valves. This valve allows flow to completely bypass both filters when the filter isolation valves are closed.
3. Close the isolation valves to and from each filter. There is an isolation valve on the inlet and outlet of each filter. These must be closed prior to opening the filter to change the bag. Do not allow the isolation filters on both filters to be closed simultaneously unless the main filter bypass valve is open to allow flow to bypass both filters.
4. Once isolation valves are closed, open the pressure release gate valve at the top of the filter slowly to release pressure. Allow the pressure to drop before opening lid. Water may spray initially upon opening this pressure release valve so be mindful.
5. Check pressure gauges to make sure pressure has reached zero on both gauges (or as low as they may go if they don't "zero out").
6. Once pressure has reached zero on both gauges, loosen lid closure bolts and open lid to access bag.
7. With the filter housing open, pull the bag, inspect for unusual solids, inspect the housing, the housing lid seal, and support basket and basket lip seal for damage.
8. Wet the bottom of the new bag to help seat it in the support basket if necessary.
9. Insert the bag making sure it is properly seated with no creases or folds, and that the bag is fully supported by the basket and not suspended. Close the lid and tighten the bolts.
10. Always make sure the lid closure bolts are completely closed.
11. Close the pressure release gate vale on the lid.
12. Slowly open the inlet isolation valve while checking for leaks from the lid. If there are leaks, close the valve and tighten to lid bolts and try again. If this does not fix the leaks, isolate the filter following the above procedures and check seals and gaskets.
13. After opening the inlet isolation vale and there are no leaks, open the outlet isolation valve to return the filter to service.
14. If the bypass valve around both filters was used to isolate both filters at once slowly close the bypass valve to force flow through the filters.
15. Discard used bag; do not reuse. Discarded bags are disposed as trash in the site trash roll-off bin.

6.2.3 EVO System

The speed of the EVO feed pumps can be adjusted with the local drive inverters. If adjusted, the speed should be confirmed with a graduated cylinder and stopwatch. The PLC is programmed to turn on the EVO feed pumps for short periods of time at set intervals.

As a tote of EVO becomes empty, the next tote is tapped using the vendor provided cutter tool and the EVO supply line is moved from the empty tote to the full one. Empty totes are disposed as trash in the site trash roll-off bin.

6.3 Start-Up and Shutdown Procedures

The system should operate continuously except for scheduled shut downs.

6.3.1 Shut-Down Procedures

In the event of the need to perform an emergency shutdown, the system can be shut down all at once by using the main power disconnect switch in the main treatment building.

If not an emergency, the following procedures should be followed.

1. Turn off EVO feed system
2. Turn off the extraction well pump
3. Turn off the transfer pump system
4. Turn off power to the control panel

If the system is going to be out of service for an extended period, the equipment information provided in Appendix I should be consulted.

6.3.2 Start-Up Procedures

1. Make sure proper PPE is worn (e.g. safety glasses/face shield, cut-resistant gloves, etc.).
2. Check the area for hazards, such as open wiring and piping, visible signs of system leakage, damage to piping components and equipment, etc. and address.
3. If starting system during the winter months, check for frozen pipes and address.
4. Prior to starting the system, make sure all valves are in the correct position to prevent "dead-heading" the system pumps (i.e. groundwater extraction pump, transfer pump, and EVO feed pumps) and causing excessively high system pressures.
5. Turn on power to the control panel.
6. Check panel for alarms and check/address alarm conditions as necessary.
7. Turn on extraction well pump making sure VFD is on the correct setting.
8. Check system pressures and flowrates from extraction well to Equalization Tank. Address abnormal conditions.
9. Check water level in Equalization Tank.

10. Check operation of Transfer Pump. It is automatically started and stopped based on the water level in Equalization Tank. If the transfer pump did not automatically start and there is sufficient water in the Equalization Tank, manually test the transfer pump operation.
11. Allow transfer pump to run for 2-3 minutes on manual then return to auto service. The transfer pump may shut down. If water level in the Equalization Tank dictates that the pump should be running but it is not, check for cause.
12. While transfer pump is running and has been running for more than 3 minutes, check system pressures and flowrates from Transfer Pump to injection well.
13. Check for leaks throughout system.
14. Check that EVO system pumps and drives are operational.
15. Check EVO supply.

6.4 System Routine and Preventive Maintenance

Routine and preventative maintenance of NDTS equipment and components is performed in accordance with operational understanding and typical industry standards. The equipment manuals in Appendix I should be consulted with regards to preventive maintenance needs, procedures, and schedules specific to that equipment and adjusted with approval.

6.4.1 Procedures

Other items of concern may include but are not necessarily limited to the following.

- Routinely check system for leaks, abnormal noises, unusually hot surfaces (pumps, motors, panels).
- Check seals and gaskets as needed.
- Clean and service pressure and flow meters, both the manual meters and gauges and the electronic sensors. Be careful to only use water to clean the pressure sensors and do not use anything abrasive on the sensor. This should be done once per month following the manufacturer's instructions found for the respective equipment in Appendix I.
- Check and clean the ultrasonic water level sensor face, reapply a thin coating of petroleum jelly as necessary to prevent condensation on face and erratic readings.
- During winter months, make sure space heaters and other freeze protection measures are in place and operating when freezing conditions are expected.

Routine and preventive maintenance activities are documented.

6.4.2 Supplies and Spare Parts

Supplies and spare parts are available in the Main Treatment Building or in the storage area at the administrative building at the main site entrance. However, the specific part may not be available the moment it is needed. Suggested spare parts include:

- Filter bags;
- Oil for lubrication;
- Detergent and paper towels for cleaning manual water meters;
- Petroleum jelly for Equalization Tank ultrasonic level indicator;
- Trash bags;
- Light bulbs; and
- Fuel, oil, and extra string for weed string trimmers.

6.5 System Adjustments

System adjustments may be necessary for a variety of reasons, including the following:

- To balance system flowrates such that excessive transfer pump start/stop cycles are avoided;
- To make sure the transfer pump is keeping up with the extraction well pump; and
- To avoid excessive pressures (e.g. if the injection lines become fouled).

The pumping rates can be adjusted with the pump VFD. Whenever adjustments to pumping rates are made, all system pressures and flowrates should be checked over several minutes to confirm operations are within proper ranges.

The EVO feed rates may be adjusted only after coordination with project management.

6.6 Housekeeping

A clean, orderly work area is an important factor in maintaining good health and safety practices, maintaining efficient operations, and being able to respond to system transient conditions. Good housekeeping practices include the following:

- Keep work area floors free of trash, wires, and trip hazards;
- Promptly clean up any spilled liquids;
- Immediately address drips, leaks, etc.;
- Replace all equipment covers, guards, doors, etc.;
- If electrical extension cords are required, make sure they are in good condition and are easily seen to avoid creating a trip hazard;
- Site trash shall be put in the site trash roll-off bin. The roll-off should be emptied as needed.
- Vegetative growth shall be controlled to less than six inches high to allow access to the DW-13 Extraction Well Shed, the Main Treatment Building, the EVO Conex Shipping Container, and the IW-8 Injection Well Shed; and
- Lighting in the DW-13 Extraction Well Shed and the Main Treatment Building is needed to implement O&M activities: light bulbs and fixtures shall be replaced when necessary.

7.0 TROUBLESHOOTING AND CORRECTIVE MAINTENANCE

In general, the manufacturer's information for respective equipment in Appendix I should be consulted for specific troubleshooting related to equipment. Troubleshooting information related to more general site related or system aspects of the system are provided below.

7.1 General Troubleshooting

Observed conditions should be noted and reported to project management regardless of outcome.

7.1.1 Loss of Power

First make sure the area is safe and that there are no downed power poles or wires. Make sure there are no sparking wires or electrical fires. Once the area is determined to be safe, check to determine whether the power loss is only local to specific systems or pieces of equipment, or system wide.

- **Site or System Wide:** The electrical provider for the site is the Northern Virginia Electric Cooperative (NOVEC). Their outage number is 703-335-0500 and can also be checked online at their website.

- **Local to Specific Equipment or Buildings:** Check the main system breakers in the Main Treatment Building and local breakers for each equipment. Only personnel trained in proper electrical safety should open panels. If the breakers appear normal and in the correct position, refer to the materials in Appendix I for information related to specific equipment with the power failure issues.

7.1.2 Reduced or Complete Loss of Flow from Extraction Well Pump

- Confirm power to pump motor, VFD, line reactor, transformers, etc.
- Confirm there is no breakage or blockage in piping.
- Confirm all valves are in proper position.
- Check system pressures.
- Check bag filter pressure gauges to determine if bags need to be changed.
- Confirm pump is not getting a stop signal from PLC of Equalization Tank floats (check water in Equalization Tank, check PLC logs, check Equalization Tank floats).
- Refer to pump, motor, and VFD troubleshooting sections in their respective manuals in Appendix I.

7.1.3 Reduced or Complete Loss of Flow from Transfer Pump

- Confirm power to pump motor, VFD, transformers, etc.
- Confirm there is no breakage in piping.
- Confirm all valves are in proper position.
- Conform there are no blockages or line restrictions.
- Confirm pump VFD is not getting a stop signal from PLC (check PLC logs).
- Refer to pump, motor, and VFD troubleshooting sections in their respective manuals in Appendix I.

7.1.4 Elevated Pressure in Lines from Extraction Well

- Check bag filter pressure inlet and outlet gauges to determine if bags need changing.
- Check for valve settings.
- Check pressure sensors and gauges for consistency.
- Check extraction well pump and VFD operation settings. If the pump or VFD are suspect causes for the issue, check their settings and refer to their operational manuals in Appendix I.
- Try to locate source of high pressure and address.
- Walk the route of piping to the main system from the extraction well and inspect for damage to the pipe along the route (e.g. ground collapse, abnormal wet areas, excavation, etc.).

7.1.5 Elevated Pressure in Injection Lines

- Check pressure sensors and gauges for consistency.
- Check valve settings.
- Check Transfer Pump and VFD operation and settings. If the pump or VFD are suspect causes for the issue, check their settings and refer to their operational manuals in Appendix I.
- Walk the route of piping from the main system to the injection well and inspect for damage to the pipe along the route (e.g. ground collapse, abnormal wet areas, excavation, etc.).
- If restricted flow or abnormally increased pressure in injection lines, the injection lines may need cleaning due to biofouling. This requires calling in a third-party contractor (Hepaco has provided this service in the past every 1-3 years).
- If cleaning the injection lines does not relieve the elevated pressure in the injection lines, the injection well may need cleaning due to bio-fouling. This requires a drilling contractor (Eichelberger has performed this service in the past). The anticipated frequency for well cleaning is every 5 – 10 years.

7.1.6 Lack of EVO Flow

- Check EVO supply.
- Check for system leaks in lines and pumps.
- Check settings of valves.
- Check power to EVO system.
- Check pump and pump drives operation and settings. Refer to manuals in Appendix I if the pump or drives are suspected.
- Check if EVO system is getting start signal from PLC (check PLC logs).

7.2 Emergency Response

STOP! If an emergency condition exists that involves injury to personnel, an active fire, or suspicious trespassers call 9-1-1, as applicable, then call the project management team (Section 3.0).

7.2.1 Equalization Tank Overflowing

- Check to see if conditions are safe to proceed.
- Stop extraction well pump at well pump VFD.
- Check Transfer Pump and its VFD operation and settings – refer to Section 7.1 above for troubleshooting related to reduced or no flow from the transfer pump.
- Inspect extent of overflow; use caution in freezing conditions; use caution if overflow reached electrical systems.
- Check PLC log to determine how long overflow may have been occurring.
- Contact site project management.

7.2.2 System Line Breakage

- Check to see if conditions are safe to proceed.
- Shutdown EVO system if related to EVO line breakage.
- If breakage is related to loss of water from system through breakage, stop extraction well pump at well pump VFD.
- Shutdown system if breakage is downstream of transfer pump.
- Inspect extent of release of water, use caution in freezing conditions, use caution if overflow reached electrical systems.
- Check PLC log to determine how long flow of water through breakage may have been occurring.
- Contact site project management.

7.2.3 Vandalism or Damage to System

- Check to see if conditions are safe to proceed.
- Determine extent of damage.
- Shutdown system if necessary.
- Contact project management.

7.3 System Repairs

Some system malfunctions will require more than minor troubleshooting and maintenance. For system issues than cannot be addressed with current supplies onsite, or parts and fittings from a local hardware store, the following actions should be followed,

- Put the system in a safe state. This may be done by simply shutting down a component (e.g., the EVP if the issue is related to the EVO system), or completely shutting down the NDTS if the malfunction involves loss of extraction well or transfer pumping capacity or loss of PLC/control.
- Identify the equipment and parts suspected of causing issues.
- Coordinate with project manager if it becomes necessary to energize portions of the system to identify the suspect cause of the issue.

- Record identifying information to determine replacement parts and costs (e.g. equipment make/model, pipe size, fitting types, etc.).
- Coordinate next steps with project management.

8.0 SYSTEM MONITORING AND SCHEDULE

This section describes system monitoring and inspection tasks important for operation and maintenance of the NDTS. For specific equipment inspection and monitoring requirements and recommended frequencies for performing these tasks, refer to the manufacturer information for the respective equipment provided in Appendix I.

8.1 Weekly General Area Inspections

All work areas associated with the NDTS should be inspected, including:

- The Extraction Well DW-13 Shed,
- The Main Treatment Building,
- Equalization Tank,
- The area between the Main Treatment Building and Extraction Tank
- The EVO system CONEX shipping container
- The Injection Well Shed
- The storage shed adjacent to the Main Treatment Building
- The main Administrative Building and storage area at the main site entrance including indoor plumbing and HVAC thermostat settings
- All visible groundwater and EVO conveyance lines, pumps, fittings, instruments
- The site trash roll-off bin
- During colder months – inspect all space heaters, propane supply at Injection Well Shed, heating oil supply at the main Administrative Building
- Inventory of expendables, spare parts, EVO, filter bags, etc.
- Walking paths between parking areas accessible to treatment system buildings

These general area inspections should include assessing the following

- Trip, slip, and fall hazards
- Vandalism
- Structural issues
- Electrical and mechanical hazards
- Leaks, spills, and pipe breakages
- Insect and animal hazards and issues (wasp nests, spiders, bird nests, damage caused by animals, etc.)
- High grass in outdoor area walking paths
- Lighting
- Sufficient supplies

- Housekeeping
- Site security
  - Gate and treatment system building locks
  - Alarm system
  - Area lighting
  - Area fencing

8.2 Operational Monitoring

The NDTS consists of manually read instruments and instruments that transmit signals to the PLC where they are logged in the PLC's memory.

8.2.1 Weekly Manually Read Instruments and Values

The following instruments should be read manually at least once per week and the results recorded for the following areas or systems.

8.2.1.1 Extraction Well DW-13 Shed

- Extraction Well Pump Pressure Gauge
- Extraction Well Pump VFD setting
- Extraction Well Pump Flow Water Meter Totalizer
- Estimate and record the flow by recording the totalizer reading over a specific duration of time.

8.2.1.2 Main Treatment Building

- Bag Filter A Inlet Pressure Gauge
- Bag Filter A Outlet Pressure Gauge
- Bag Filter B Inlet Pressure Gauge
- Bag Filter B Outlet Pressure Gauge
- GAC Inlet Pressure Gauge
- Extraction Well Flow Signet Sensor Meter Display Readout
- Bag Filters Signet Pressure Sensor Display Readout
- IW-8A Flow Water Meter Totalizer
- Estimate and record the flow by recording the totalizer reading over a specific duration of time.
- IW-8A Pressure Gauge
- IW-8B Flow Water Meter Totalizer
- Estimate and record the flow by recording the totalizer reading over a specific duration of time.
- IW-8B Pressure Gauge
- IW-8A Flow Signet Sensor Meter Display Readout
- IW-8B Flow Signet Sensor Meter Display Readout
- IW-8 Signet Pressure Sensor Display Readout

8.2.1.3 Injection Well IW-8 Shed

- IW-8A Pressure Gauge
- IW-8B Pressure Gauge
- Air/Vacuum Release Line Pressure Gauge
- Propane Tank Percent Remaining Gauge

8.2.1.4 EVO System

- Record the level decease of EVO in tote since last inspection (measured with a tape measure).
- Calculate volume of EVOP injected since last inspection.
- Calculate total volume of EVO supply remaining in current tote and in total for both totes.

8.2.2 Weekly PLC Data Downloads

PLC data provide information for NDTS evaluation and to satisfy reporting requirements. By connecting a laptop with the ProView software to the PLC using the serial port connection, download the logged data in accordance with the instructions found in the Appendix I-13. Three files (data types) should be downloaded weekly. They include the "Discrete", the "Analog In", and the "Events" data file types. The "Analog Out" data file type does not need to be downloaded.

The data type files should be downloaded as .CSV file types. The filenames should be in the format described below,

- **Discrete Type File:** The "Discrete" file names should start with "DIS" and then include the month, date, and year, e.g. "DIS02JAN17.csv" for January 2, 2017, DIS02_07_17.csv.
- **Analog-In Type File:** Similarly, "Analog-In" type files names should start with "ANAI" or "ANA" and include the month, date, and year.
- **Events Type File:** The "Events" type filenames should start with "EVE" and include the month, date, and year.

For the file names above, the filename may get automatically truncated when it gets saved due to filename length restrictions by the software. The filenames should be checked after they are downloaded/saved and manually renamed in the Windows file manager to include the full desired filename.

If a specific data type file is downloaded and saved more than once in a single day, the filename should include a "-2" on the second download, a "-3" on the third download, etc.

Files should be emailed to project management when access to email becomes available.

9.0 DOCUMENTATION AND REPORTING

Annual reporting includes a summary of information generated during periodic O&M inspections and PLC downloads.

9.1 Documentation

Weekly inspections include the recording of information from manual gauges on an inspection form and notes regarding equipment operations, routine maintenance, and repairs. PLC downloads are conducted during the inspection. The inspection form and PLC downloads are emailed to the O&M Manager and the Site Project Manager for review and evaluation.

9.2 Reporting

Relevant information on the operation of the NDTS is summarized in the Sampling and Analysis Report for each calendar year. This annual report is submitted by the end of the first quarter of the subsequent calendar year to USEPA. The report includes O&M summaries of:

- Operational information;
- Maintenance activities;
- Repair activities;
- NDTS downtime, if any; and
- System upgrades, if any.

The annual report also provides results of the Sampling and Analysis Plan (TRC, 2015) and Groundwater Monitoring and Well Reduction Plan (TRC 2017; collectively provided in Appendix IV of the CMI Plan), which is used to evaluate the performance of the NDTS. NDTS performance is evaluated with water level measurements to confirm control of contaminant migration within the NDTS area of the Site and contaminants trends. This information is used to consider the potential need for upgrade or modification of the NDTS.

10.0 REFERENCES

ENVIRON International Corporation. 2012. *RCRA Facility Investigation Baseline Risk Assessment*. Atlantic Research Corporation Facility, Gainesville, Virginia. November 2, 2012.

ENVIRON International Corporation. 2013. *RCRA Facility Investigation Soil Interim Measures Project Completion Report*. Atlantic Research Corporation Facility, Gainesville, Virginia. July 26, 2013.

Geosyntec Consultants. 2011a. Soil Interim measures (IM) Work Plan. Atlantic Research Corporation Facility, Gainesville, Virginia. March 2011.

Geosyntec Consultants. 2011b. *Thermal Treatment Facility, Closure Final Report*. Atlantic Research Corporation Facility, Gainesville, Virginia. November 30, 2011.

Geosyntec Consultants. 2011c. *Evaluation of Potential for Off-Site Migration of Contaminants in Groundwater and Surface Water at the Atlantic Research Corporation Gainesville, VA Facility*. EPA ID No. VAD 023741705. Memorandum from Julie Konzuk, Ph.D., P.Eng. to Erich Weissbart, P.G. December 22.

Geosyntec Consultants. 2012b. *Addendum to the Draft Final SRFI Report*. Atlantic Research Corporation Facility, Gainesville, Virginia. September 2012.

Integral Consulting Inc., 2016. *Human Health Risk Assessment Addendum – Newly Collected Perchlorate Soil Data Analysis and Overall HHRA Findings*. Atlantic Research Corporation RCRA Corrective Action Site, Gainesville, Virginia. July 29, 2016.

TRC Environmental Corporation. 2015. *Sampling and Analysis Plan*. Atlantic Research Corporation RCRA Corrective Action Site, Gainesville, Virginia. July 9, 2015.

TRC Environmental Corporation. 2017. *Groundwater Monitoring and Well Reduction Plan*. Atlantic Research Corporation RCRA Corrective Action Site, 5945 Wellington Road, Gainesville, Virginia 20155. July 18, 2017.

TRC Environmental Corporation. 2018. *Sampling and Analysis Report Calendar Year 2017*. Atlantic Research Corporation RCRA Corrective Action Site, Gainesville, Virginia. March 28, 2018

United States Environmental Protection Agency. 2012a. *Evaluation of Potential for Off-Site Migration of Contaminants in Groundwater and Surface Water at the Atlantic Research Corporation Gainesville, VA Facility. EPA ID No. VAD 023741705*. Memorandum from Erich Weissbart to Brian Buniva. March 13, 2012.

United States Environmental Protection Agency. 2016. *Approval of Human Health Risk Assessment*. Letter from Erich Weissbart to Brian Buniva. October 20, 2016.

Virginia Water Quality Standards. 2011. Virginia Administrative Code 25-260. January 2011.

FIGURES

Injection Well
IW-8

Treatment System
Building 72C

Exraction Well
DW-13

Sharpless Parcel

Gainesville Parcel

Main Entrance on
Wellington Road

Location Overview

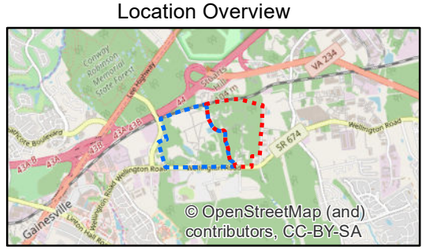

Site Features

- Gainesville Parcel
- Sharpless Parcel

500 250 0 500
Feet

N

Site Location and Key NDTS Layout Features

Atlantic Research Corporation, Gainesville, Virginia

TRC Environmental Inc.
11231 Cornell Park Drive
Cincinnati, Ohio 45242

Project: 229931.0000.0000

9/28/2018

Figure 1

G:\GIS_Projects\GIS_SEQUA\Gainesville\MXD\Utilities and Treatment System\OMP-F01-20180924a.mxd

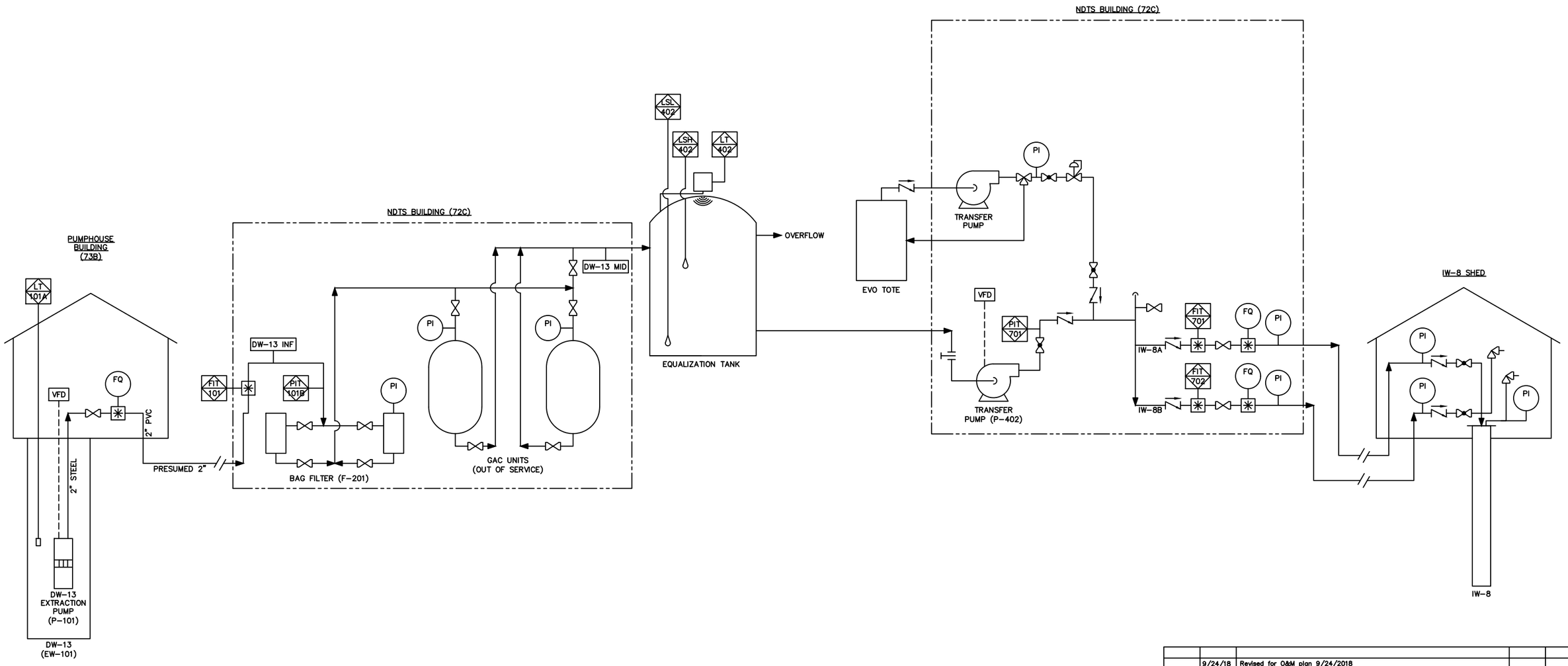

ACRONYMS:

GAC	GRANULAR ACTIVATED CARBON
FIT	FLOW INDICATING TRANSMITTER
FQ	FLOW TOTALIZER
LSH	LEVEL SWITCH HIGH
LSL	LEVEL SWITCH LOW
LT	LEVEL TRANSMITTER
PI	PRESSURE INDICATOR
PIT	PRESSURE INDICATING TRANSMITTER
VFD	VARIABLE FREQUENCY DRIVE (PUMP CONTROL)

LEGEND:

- BALL VALVE
- GATE VALVE
- CHECK VALVE
- KNIFE GATE VALVE
- PRESSURE REGULATING VALVE
- THREE-WAY VALVE
- FLOW METER

REV	DATE	DESCRIPTION	DRN	APP
	9/24/18	Revised for O&M plan 9/24/2018		
	1/28/14	Drawing CAD files provided by GSA. Updated by TRC 1/28/2014		

TRC Results you can rely on
11231 CORNELL PARK DRIVE
CINCINNATI, OHIO 45242
PHONE: 513-489-2255

TITLE: NDTS PROCESS FLOW

PROJECT: ARC GAINESVILLE

SITE: ATLANTIC RESEARCH CORPORATION
GAINESVILLE, VIRGINIA

THIS DRAWING MAY NOT BE ISSUED FOR PROJECT TENDER OR CONSTRUCTION, UNLESS SEALED.

SIGNATURE

DATE

DESIGN BY:	TRC	DATE:	SEPT 24, 2018
DRAWN BY:	TRC	PROJECT NO.:	229931.0000
CHECKED BY:		FILE:	NDTS_A-20180924
REVIEWED BY:		DRAWING NO.:	2
APPROVED BY:			

G:\CADD\Gainesville\NDTS_A-20180924.dwg

APPENDIX I

VENDOR EQUIPMENT DOCUMENTATION

Extraction Well System – DW-13 Pump Shed, Building 73B

I-1 DW-13 Well Submersible Pump, Grundfos Model 85S100-9
I-2 DW-13 Well Pump Motor, Franklin 10 HP Motor
I-3 DW-13 Well Pump Motor Variable Frequency Drive, Lenze AC Tech SMVector
I-4 Electrical Transformers, General Purpose Acme 750 kVA, 1 Phase
I-5 Electrical Line Reactor, Trans-Coil, Inc., 3-phase
I-6 Well Pressure Transducer, In-Situ PXD-261

Main Treatment Building, Building 72C

I-7 Equalization Tank Level Indicator
I-8 Transfer Pump, Aurora Model 344A End Suction Centrifugal
I-9 Transfer Pump VFD, Altivar 31
I-10 30 kVA 3-Phase Dry Transformer, Square D EE30T3H
I-11 15 kVA 3-Phase Dry Transformer, Square D 15T3H
I-12 System Main/Master Control Panel
I-13 Programmable Logic Controllers, EOS Research ProView Series 2plus

EVO Injection System

I-14 EVO Injection Pumps, Liquiflo H3 gear pumps
I-15 EVO Injection Pump Drives, Lenze SMVector ESV371N02YXB

Injection Well System – IW-8 Shed

I-16 Air-Vacuum Release Valves, A.R.I. D-040 Series
I-17 Propane Space Heater,

Equipment Used in Multiple Locations

I-18 Water Meter/Totalizer, Master Meter MM7T
I-19 Signet Flow Sensors and Transmitters
I-20 Signet Pressure Sensor and Transmitters

DIMENSIONS AND WEIGHTS

MODEL NO.	FIG.	HP	MOTOR SIZE	DISCH. SIZE	DIMENSIONS IN INCHES					APPROX. SHIP WT.
					A	B	C	D	E	
85S15-1	A	1 1/2	4"	3" NPT	25.9	13.6	12.3	3.75	5.2	37
85S30-2	A	3	4"	3" NPT	35.3	20.6	14.7	3.75	5.2	61
85S50-3	A	5	4"	3" NPT	40.7	23.6	17.1	3.75	5.2	75
85S50-4	A	5	4"	3" NPT	43.1	23.6	19.5	3.75	5.2	77
85S75-5	A	7 1/2	4"	3" NPT	51.5	29.6	21.9	3.75	5.2	95
85S75-6	A	7 1/2	4"	3" NPT	53.9	29.6	24.3	3.75	5.2	97
85S100-7	A	10	4"	3" NPT	70.5	43.9	26.6	3.75	5.2	151
85S100-8	A	10	4"	3" NPT	72.9	43.9	29.0	3.75	5.2	154
85S100-9	A	10	4"	3" NPT	75.3	43.9	31.4	3.75	5.2	156
85S75-5	A	7 1/2	6"	3" NPT	46.7	24.2	22.5	5.38	5.6	135
85S75-6	A	7 1/2	6"	3" NPT	49.1	24.2	24.9	5.38	5.6	137
85S100-7	A	10	6"	3" NPT	52.7	25.4	27.3	5.38	5.6	148
85S100-8	A	10	6"	3" NPT	55.0	25.4	29.6	5.38	5.6	151
85S100-9	A	10	6"	3" NPT	57.4	25.4	32.0	5.38	5.6	153
85S150-10	A	15	6"	3" NPT	62.4	28.0	34.4	5.38	5.6	170
85S150-11	A	15	6"	3" NPT	64.8	28.0	36.8	5.38	5.6	174
85S150-12	A	15	6"	3" NPT	67.2	28.0	39.2	5.38	5.6	176
85S150-13	A	15	6"	3" NPT	69.6	28.0	41.6	5.38	5.6	178
85S200-14	A	20	6"	3" NPT	74.5	30.6	43.9	5.38	5.6	193
85S200-15	A	20	6"	3" NPT	76.9	30.6	46.3	5.38	5.6	198
85S200-16	A	20	6"	3" NPT	79.3	30.6	48.7	5.38	5.6	200
85S200-17	A	20	6"	3" NPT	81.7	30.6	51.1	5.38	5.6	202
85S200-18	A	20	6"	3" NPT	84.1	30.6	53.5	5.38	5.6	204
85S250-19	A	25	6"	3" NPT	88.9	33.1	55.8	5.38	5.6	240
85S250-20	A	25	6"	3" NPT	91.9	33.1	58.8	5.38	5.6	244
85S250-21	A	25	6"	3" NPT	94.3	33.1	61.2	5.38	5.6	246
85S250-22	A	25	6"	3" NPT	96.7	33.1	63.6	5.38	5.6	249
85S300-23	A	30	6"	3" NPT	101.9	35.7	66.2	5.38	5.6	264
85S300-24	A	30	6"	3" NPT	104.1	35.7	68.4	5.38	5.6	266
85S300-25	A	30	6"	3" NPT	106.4	35.7	70.7	5.38	5.6	271
85S300-26	A	30	6"	3" NPT	108.8	35.7	73.1	5.38	5.6	273
85S300-27	A	30	6"	3" NPT	116.3	40.8	75.5	5.38	5.6	278
85S400-28	A	40	6"	3" NPT	118.7	40.8	77.9	5.38	5.6	281
85S400-29	A	40	6"	3" NPT	121.1	40.8	80.3	5.38	5.6	283
85S400-30	A	40	6"	3" NPT	123.4	40.8	82.6	5.38	5.6	287
85S400-33*	B	40	6"	3" NPT	139.7	40.8	98.9	5.38	6.9	343
85S400-36*	B	40	6"	3" NPT	146.9	40.8	106.1	5.38	6.9	354
85S500-39*	B	50	6"	3" NPT	171.0	57.8	113.2	5.38	6.9	448
85S400-33*	B	40	8"	3" NPT	134.7	35.8	98.9	7.5	6.9	377
85S400-36*	B	40	8"	3" NPT	141.9	35.8	106.1	7.5	6.9	390
85S500-39*	B	50	8"	3" NPT	152.0	38.8	113.2	7.5	6.9	498

NOTES: All models suitable for use in 6" wells, unless otherwise noted.
Weights include pump end with motor in lbs.
* Built into sleeve 3" NPT discharge, 8" min. well dia.

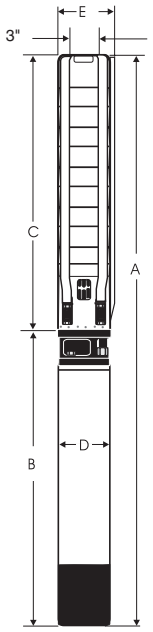

Fig. A

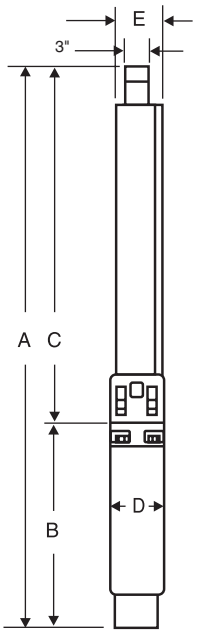

Fig. B

MATERIALS OF CONSTRUCTION

COMPONENT	CYLINDRICAL SHAFT (1- 39 Stgs.)
Check Valve Housing	304 Stainless Steel
Check Valve	304 Stainless Steel
Diffuser Chamber	304 Stainless Steel
Split Cone Nut	304 Stainless Steel
Split Cone	304 Stainless Steel
Impeller	304 Stainless Steel
Suction Interconnector	304 Stainless Steel
Seal Ring Support	304 Stainless Steel
Inlet Screen	304 Stainless Steel
Straps	304 Stainless Steel
Cable Guard	304 Stainless Steel
Priming Inducer	304 Stainless Steel
Coupling	316/329 Stainless Steel**
Pump Shaft	431 Stainless Steel
Intermediate Bearings	NBR
Impeller Seal Ring	NBR/PPS
Check Valve Seat	NBR/316 Stainless Steel
Upthrust Disc	Carbon/Graphite
Upthrust Stop Washer	304 Stainless Steel
8" Motor Adaptor Plate	304 Stainless Steel
Sleeve *	316 Stainless Steel
Sleeve Flange *	316 Stainless Steel
NOTES: Specifications are subject to change without notice. * Required for 33-39 stages. ** 4" Coupling made of 316 Stainless Steel	

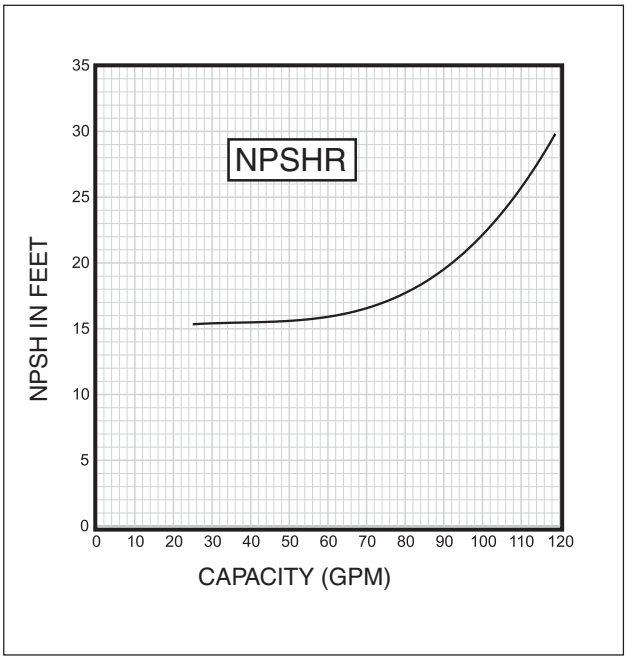

FLOW RANGE: 18 -118 GPM **OUTLET SIZE: 3" NPT** **NOMINAL DIA. 6"**

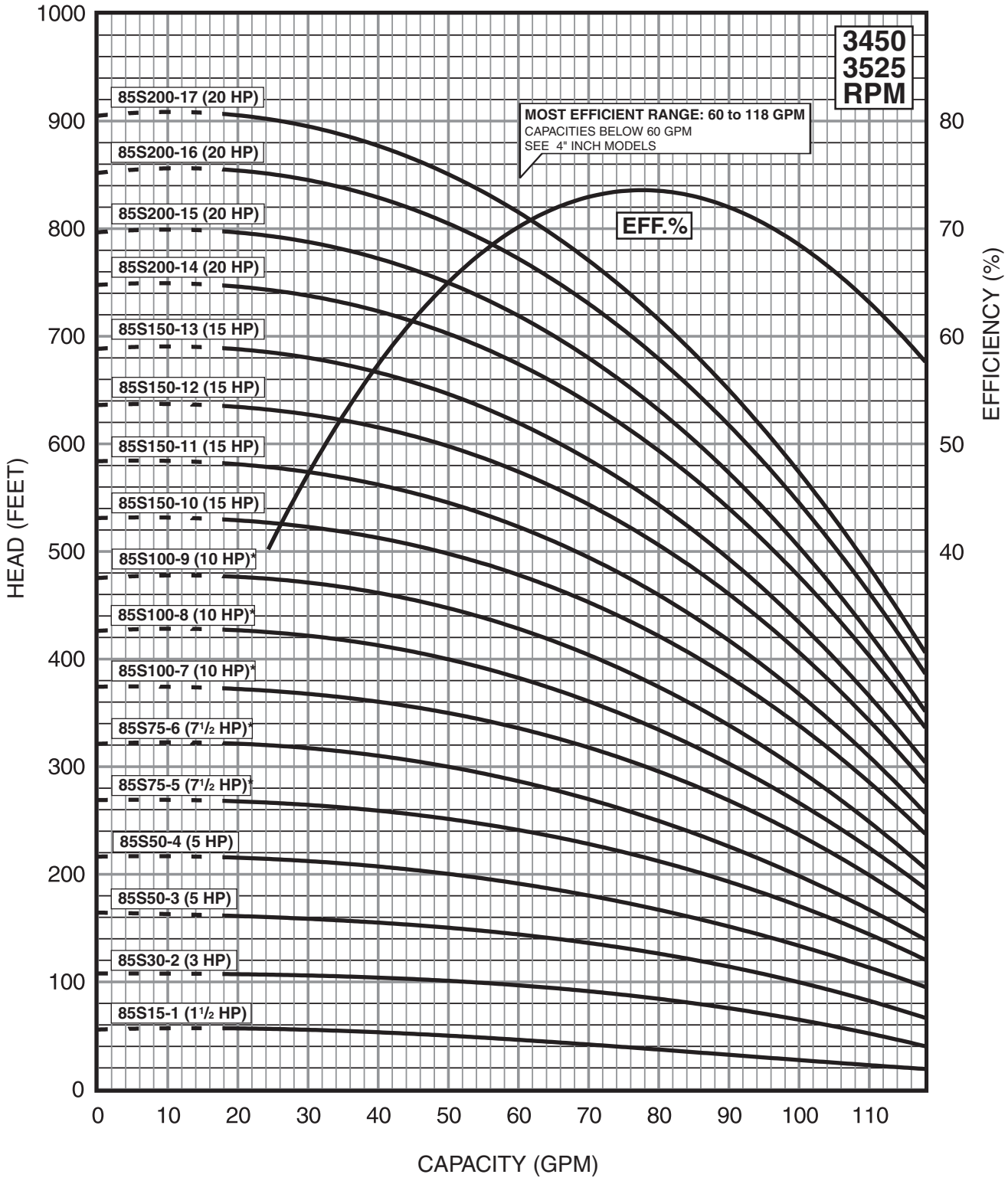

SPECIFICATIONS SUBJECT TO CHANGE WITHOUT NOTICE.
4" MOTOR STANDARD, 1.5-5 HP/3450 RPM
6" MOTOR STANDARD, 7.5-50 HP/3450 RPM.
* Alternate motor sizes available.

Performance conforms to ISO 9906 Annex A
@ 5 ft. min. submergence.

FLOW RANGE: 18 -118 GPM **OUTLET SIZE: 3" NPT** **NOMINAL DIA. 6"**

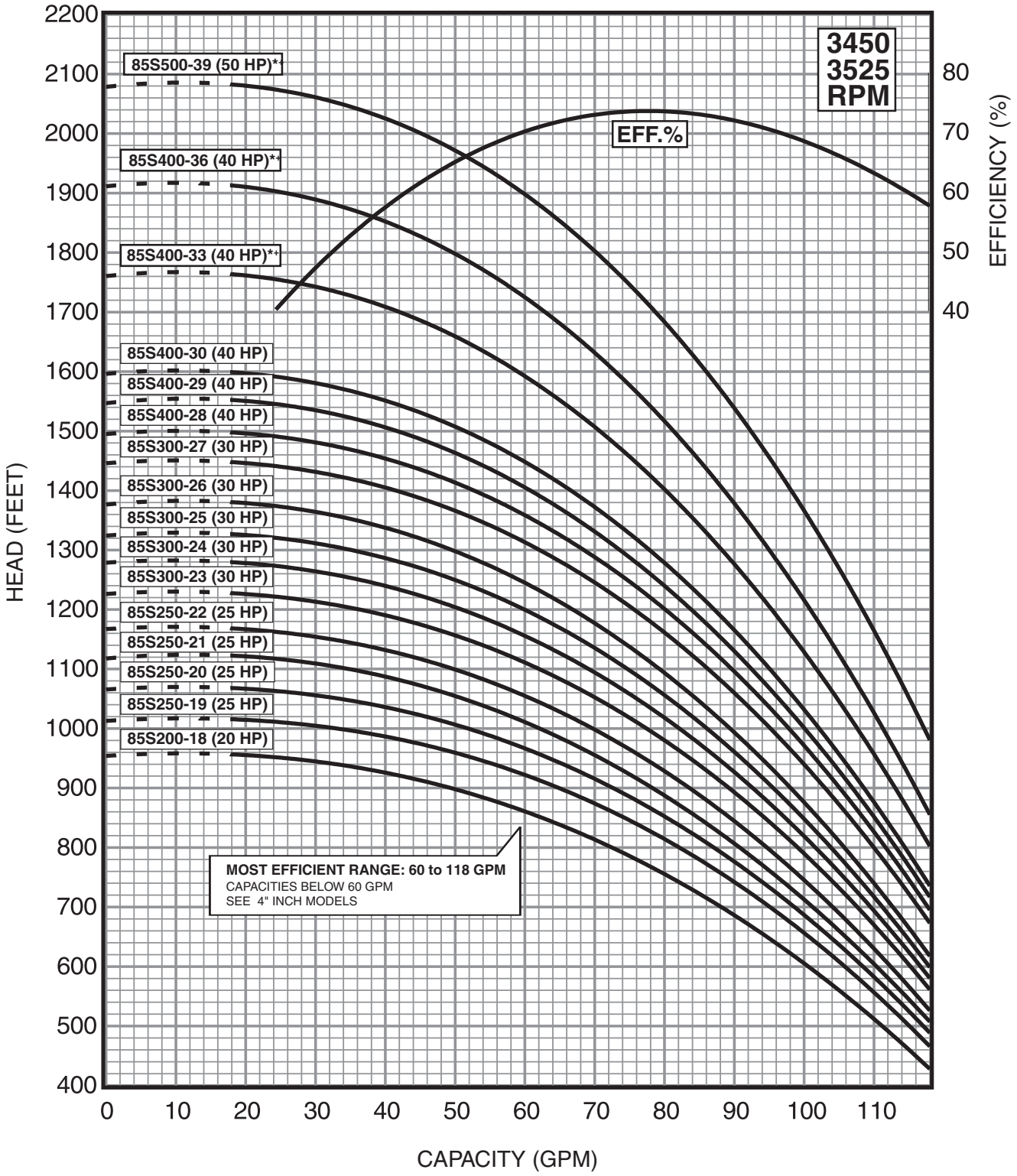

SPECIFICATIONS SUBJECT TO CHANGE WITHOUT NOTICE.
* Built into sleeve 3" male NPT discharge/ 8" min. well diameter.
6" MOTOR STANDARD, 7.5-50 HP/3450 RPM.
+Alternate motor sizes available.

Performance conforms to ISO 9906 Annex A
@ 5 ft. min. submergence.

SP

Installation and operating instructions

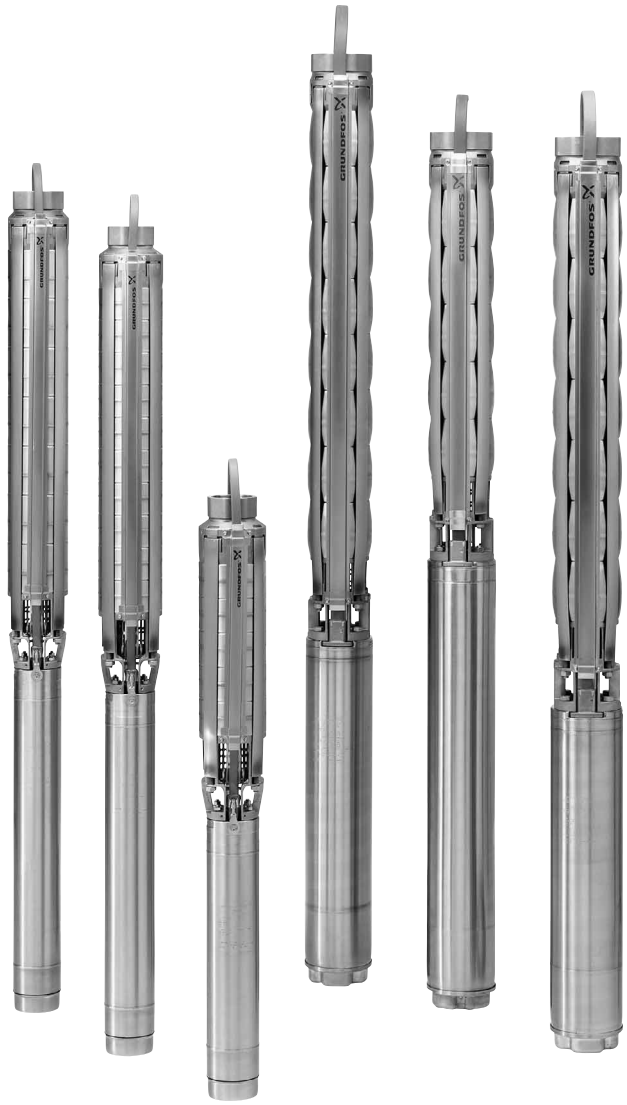

Other languages

http://net.grundfos.com/qr/i/98074911

be
think
innovate

GRUNDFOS

Original installation and operating instructions.

CONTENTS

		Page
1.	**Symbols used in this document**	**2**
2.	**Introduction**	**2**
3.	**Delivery and storage**	**2**
3.1	Delivery	2
3.2	Storage	2
4.	**Applications**	**3**
4.1	Pumped liquids	3
4.2	Sound pressure level	3
5.	**Preparations before installation**	**3**
5.1	Checking the motor liquid	3
5.2	Positional requirements	5
5.3	Pump/motor diameter	5
5.4	Liquid temperatures/cooling	5
5.5	Pipe connection	6
6.	**Electrical connection**	**6**
6.1	Frequency converter operation	7
6.2	Motor protection	7
6.3	Lightning protection	8
6.4	Cable sizing	8
6.5	Control of single-phase MS 402 motors	9
6.6	Connection of single-phase motors	9
6.7	Connection of three-phase motors	10
7.	**Installation**	**11**
7.1	Fitting the motor to the pump	11
7.2	Removing and fitting the cable guard	12
7.3	Connecting the submersible drop cable	12
7.4	Riser pipe	12
7.5	Maximum installation depth below water level [m]	12
7.6	Cable clips	13
7.7	Lowering the pump	13
7.8	Installation depth	13
8.	**Startup and operation**	**13**
8.1	Startup	13
8.2	Operation	14
9.	**Maintenance and service**	**14**
10.	**Fault finding**	**15**
11.	**Checking motor and cable**	**16**
12.	**Disposal**	**16**

Warning

Prior to installation, read these installation and operating instructions. Installation and operation must comply with local regulations and accepted codes of good practice.

1. Symbols used in this document

Warning

If these safety instructions are not observed, it may result in personal injury.

Warning

If these instructions are not observed, it may lead to electric shock with consequent risk of serious personal injury or death.

Caution — If these safety instructions are not observed, it may result in malfunction or damage to the equipment.

Note — Notes or instructions that make the job easier and ensure safe operation.

2. Introduction

These instructions apply to Grundfos submersible pumps, type SP, with submersible motors, types Grundfos MS/MMS or Franklin 4"-8".

If the pump is fitted with a motor of another motor make than Grundfos MS or MMS, note that the motor data may differ from the data stated in these instructions.

Note — The USB stick supplied with the product contains installation and operating instructions in various languages.

3. Delivery and storage

3.1 Delivery

Caution — The pump should remain in the packing until it is placed in vertical position during installation.

Handle the pump with care.

When the pump part and motor are supplied as separate units (long pumps), fit the motor to the pump as described in section *7.1 Fitting the motor to the pump*.

Note — The extra nameplate supplied with the pump should be fixed at the installation site.

Do not expose the pump to unnecessary impact and shocks.

3.2 Storage

Storage temperature

Pump: -20 °C to +60 °C.
Motor: -20 °C to +70 °C.

The motors must be stored in a closed, dry and well ventilated room.

Caution — If MMS motors are stored, the shaft must be turned by hand at least once a month. If a motor has been stored for more than one year before installation, the rotating parts of the motor must be dismantled and checked before use.

The pump should not be exposed to direct sunlight.

If the pump has been unpacked, it should be stored horizontally, adequately supported, or vertically to prevent misalignment of the pump. Make sure that the pump cannot roll or fall over.

During storage, the pump can be supported as shown in fig. 1.

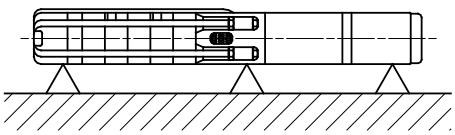

TM00 1349 2495

Fig. 1 Pump position during storage

3.2.1 Frost protection

If the pump has to be stored after use, it must be stored on a frost-free location, or the motor liquid must be frost-proof.

4. Applications

Grundfos SP submersible pumps are designed for a wide range of water supply and liquid transfer applications, such as the supply of fresh water to private homes or waterworks, water supply in horticulture and agriculture, drawdown of groundwater and pressure boosting, and various industrial jobs.

The pump must be installed so that the suction interconnector is completely submerged in the liquid. The pump can be installed horizontally or vertically. See section *5.2 Positional requirements*.

4.1 Pumped liquids

Clean, thin, non-explosive liquids without solid particles or fibres.

The maximum sand content of the water must not exceed 50 g/m^3. A larger sand content will reduce the life of the pump and increase the risk of blockage.

Caution When pumping liquids with a density higher than that of water, motors with correspondingly higher outputs must be used.

If liquids with a viscosity higher than that of water are to be pumped, contact Grundfos.

The pump versions SP A N, SP A R, SP N, SP R and SPE are designed for liquids with higher aggressiveness than drinking water.

The maximum liquid temperature appears from section *5.4 Liquid temperatures/cooling*.

4.2 Sound pressure level

The sound pressure level has been measured in accordance with the rules laid down in the EC machinery directive 2006/42/EC.

Sound pressure level of pumps

The values apply to pumps submerged in water, without external regulating valve.

Pump type	$\overline{L}_{pA}$ [dB(A)]
SP 1A	< 70
SP 2A	< 70
SP 3A	< 70
SP 5A	< 70
SP 7	< 70
SP 9	< 70
SP 11	< 70
SP 14	< 70
SP 17	< 70
SP 30	< 70
SP 46	< 70
SP 60	< 70
SP 77	< 70
SP 95	< 70
SP 125	79
SP 160	79
SP 215	82

Sound pressure level of motors

The sound pressure level of Grundfos MS and MMS motors is lower than 70 dB(A).

Other motor makes: See installation and operating instructions for these motors.

5. Preparations before installation

Warning

Before starting work on the product, switch off the power supply. Make sure that the power supply cannot be accidentally switched on.

5.1 Checking the motor liquid

The motors are factory-filled with a special non-poisonous liquid which is frost-proof down to -20 °C.

Note Check the level of motor liquid and refill if required. Use clean water.

Caution If frost protection is required, special Grundfos liquid must be used to refill the motor. Otherwise clean water may be used for refilling (however, never use distilled water).

Refill liquid as described below.

5.1.1 Grundfos MS 4000 and MS 402 motors

The filling hole for motor liquid is placed in the following positions:

- MS 4000: in the top of the motor.
- MS 402: in the bottom of the motor.

1. Position the submersible pump as shown in fig. 2. The filling screw must be at the highest point of the motor.
2. Remove the screw from the filling hole.
3. Inject liquid into the motor with the filling syringe until the liquid runs back out of the filling hole. See fig. 2.
4. Replace the screw in the filling hole and tighten securely before changing the position of the pump.

Torques

- MS 4000: 3.0 Nm.
- MS 402: 2.0 Nm.

The submersible pump is now ready for installation.

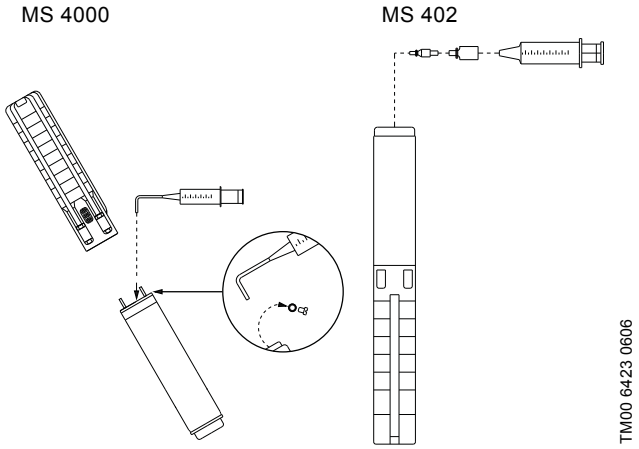

Fig. 2 Motor position during filling - MS 4000 and MS 402

5.1.2 Grundfos MS 6000 motors

- If the motor is delivered from stock, check the level of motor liquid before fitting the motor to the pump. See fig. 3.
- When pumps are delivered direct from Grundfos, the level has already been checked.
- Check the level in connection with service. See fig. 3.

The filling hole for motor liquid is placed at the top of the motor.

1. Position the submersible pump as shown in fig. 3. The filling screw must be at the highest point of the motor.
2. Remove the screw from the filling hole.
3. Inject liquid into the motor with the filling syringe until the liquid runs back out of the filling hole. See fig. 3.
4. Replace the screw in the filling hole and tighten securely before changing the position of the pump.

Torque: 3.0 Nm.

The submersible pump is now ready for installation.

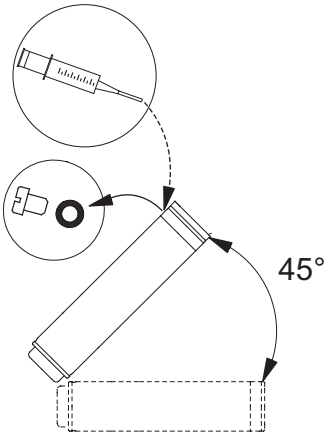

TM03 8129 0507

Fig. 3 Motor position during filling - MS 6000

5.1.3 Grundfos MMS 6, MMS 8000, MMS 10000 and MMS 12000 motors

1. Place the motor at a 45 ° angle with the top of the motor upwards. See fig. 4.
2. Unscrew the plug A and place a funnel in the hole.
3. Pour tap water into the motor until the motor liquid inside the motor starts running out of A.

Caution Do not use motor liquid as it contains oil.

4. Remove the funnel and refit the plug A.

Caution Before fitting the motor to a pump after a long period of storage, lubricate the shaft seal by adding a few drops of water and turning the shaft.

The submersible pump is now ready for installation.

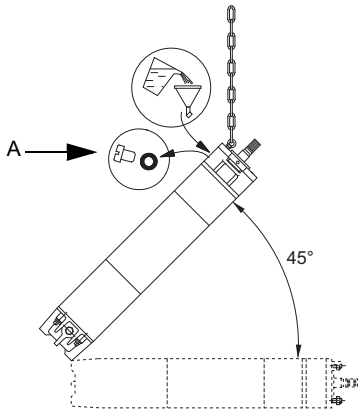

TM03 0265 3605

Fig. 4 Motor position during filling - MMS

5.1.4 Franklin motors from 3 kW and up

Check the level of motor liquid in Franklin 4" and 6" motors by measuring the distance from the bottom plate to the built-in rubber diaphragm. The distance can be measured by inserting a rule or a small rod through the hole until it touches the diaphragm. See fig. 5.

Caution Take care not to damage the diaphragm.

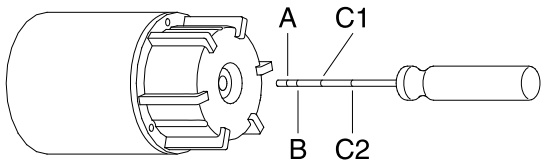

TM00 1353 5092

Fig. 5 Measuring the distance from bottom plate to diaphragm

The table below shows the correct distance from the outside of the bottom plate to the diaphragm:

Motor	Dimension	Distance [mm]
Franklin 4", 0.25 - 3 kW (fig. 6a)	A	8
Franklin 4", 3 - 7.5 kW (fig. 6b)	B	16
Franklin 6", 4-45 kW (fig. 6c)	C1	35
Franklin 6", 4-22 kW (fig. 6d)	C2	59

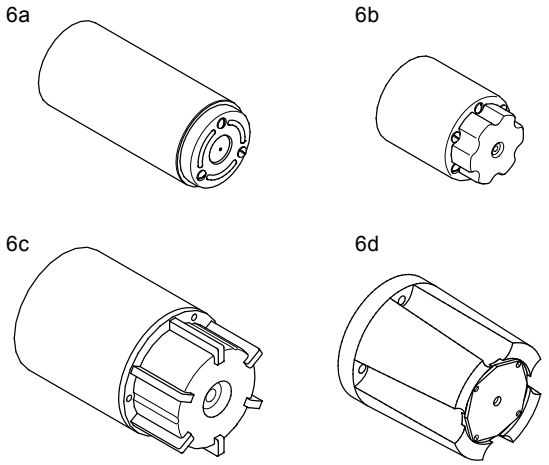

TM00 6422 3695

Fig. 6 Franklin motors

If the distance is not correct, carry out an adjustment as described in section *5.1.5 Franklin motors*.

5.1.5 Franklin motors

Check the level of motor liquid in Franklin 8" motors as follows:

1. Press out the filter in front of the valve at the top of the motor using a screwdriver. If the filter is slotted, unscrew. Figure 7 shows the position of the filling valve.
2. Press the filling syringe against the valve and inject the liquid. See fig. 7. If the valve cone is depressed too far, it may be damaged thus causing the valve to leak.
3. Remove any air in the motor by pressing the point of the filling syringe lightly against the valve.
4. Repeat the process of injecting liquid and releasing air until the liquid starts running out or the diaphragm is in its correct position (Franklin 4" and 6").
5. Refit the filter.

The submersible pump is now ready for installation.

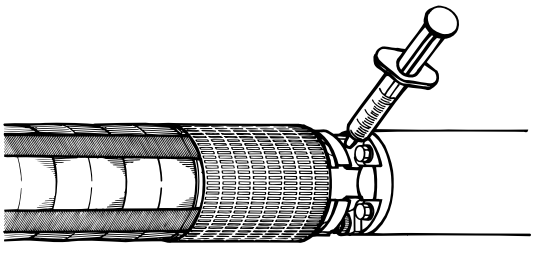

Fig. 7 Position of filling valve

5.2 Positional requirements

Warning

If the pump is to be installed in a position where it is accessible, the coupling must be suitably isolated from human touch. The pump can for instance be built into a flow sleeve.

Depending on motor type, the pump can be installed either vertically or horizontally. A complete list of motor types suitable for horizontal installation is shown in section *5.2.1 Motors suitable for horizontal installation*.

If the pump is installed horizontally, the discharge port should never fall below the horizontal plane. See fig. 8.

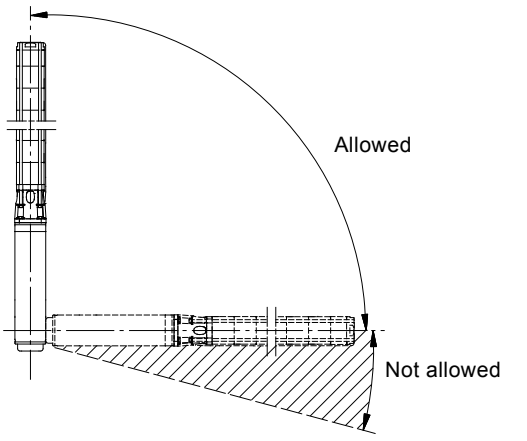

Fig. 8 Positional requirements

If the pump is installed horizontally, e.g. in a tank, we recommend that you fit it in a flow sleeve.

5.2.1 Motors suitable for horizontal installation

Motor	Output power 50 Hz	Output power 60 Hz
	[kW]	[kW]
MS	All	All
MMS 6	5.5 - 37	5.5 - 37
MMS 8000	22-110	22-110
MMS 10000	75-190	75-190
MMS 12000	147-250	147-250

When Franklin 4" motors up to and including 2.2 kW are started more than 10 times a day, we recommend that you incline the motor at least 15 ° above the horizontal plane in order to minimise wearing of the upthrust disc.

Caution During operation, the suction interconnector of the pump must always be completely submerged in the liquid. Make sure that the NPSH values are fulfilled.

Warning

If the pump is used for pumping hot liquids (40 to 60 °C), make sure that persons cannot come into contact with the pump and the installation, e.g. by installing a guard.

5.3 Pump/motor diameter

We recommend that you check the borehole with an inside calliper to ensure unobstructed passage.

5.4 Liquid temperatures/cooling

The maximum liquid temperature and the minimum flow velocity past the motor appear from the table below.

We recommend that you install the motor above the well screen in order to achieve proper motor cooling.

Caution In cases where the stated flow velocity cannot be achieved, a flow sleeve must be installed.

If there is a risk of sediment build-up, such as sand, around the motor, use a flow sleeve in order to ensure proper cooling of the motor.

5.4.1 Maximum liquid temperature

Out of consideration for the rubber parts in pump and motor, the liquid temperature must not exceed 40 °C (~ 105 °F). See also the table below.

The pump can operate at liquid temperatures between 40 °C and 60 °C (~ 105 °F and 140 °F) provided that all rubber parts are replaced every third year.

Motor	Installation		
	Flow past the motor	Vertical	Horizontal
Grundfos MS 402 MS 4000 MS 6000	0.15 m/s	40 °C (~ 105 °F)	40 °C (~ 105 °F)
Grundfos MS 4000I*	0,15 m/s	60 °C (~ 140 °F) Flow sleeve recommended	60 °C (~ 140 °F) Flow sleeve recommended
Grundfos MS 6000I*	1.00 m/s		
Grundfos MMS	0.15 m/s	25 °C (~ 77 °F)	25 °C (~ 77 °F)
	0.50 m/s	30 °C (~ 86 °F)	30 °C (~ 86 °F)
Franklin 4"	0.08 m/s	30 °C (~ 85 °F)	30 °C (~ 85 °F)
Franklin 6" and 8"	0.16 m/s	30 °C (~ 85 °F)	30 °C (~ 85 °F)

* At an ambient pressure of minimum 1 bar (1 MPa).

Note 37 kW MMS 6, 110 kW MMS 8000 and 170 kW MMS 10000: The maximum operational liquid temperature is 5 °C lower than the values stated in the above table.

190 kW MMS 10000: The temperature is 10 °C lower.

5.5 Pipe connection

If noise may be transmitted to the building through the pipework, we recommend that you use plastic pipes.

Note We recommend plastic pipes for 4" pumps only.

When using plastic pipes, secure the pump by an unloaded straining wire.

Warning

Make sure that the plastic pipes are suitable for the actual liquid temperature and the pump pressure.

When connecting plastic pipes, use a compression coupling between the pump and the first pipe section.

6. Electrical connection

Warning

During electrical installation, make sure that the power supply cannot be accidentally switched on.

Warning

The electrical installation should be carried out by an authorised person in accordance with local regulations.

The supply voltage, rated maximum current and cos φ appear from the loose data plate which must be fitted close to the installation site.

The required voltage quality for MS and MMS motors, measured at the motor terminals, is - 10 %/+ 6 % of the nominal voltage during continuous operation (including variation in the supply voltage and losses in cables).

Check also that there is voltage symmetry in the power supply lines, i.e. same difference of voltage between the individual phases. See section *11. Checking motor and cable*, item 2.

Warning

The pump must be earthed.

The pump must be connected to an external mains switch with a minimum contact gap of 3 mm in all poles.

If MS motors with a built-in temperature transmitter (Tempcon) are not installed together with a MP 204 or similar Grundfos motor protection, they must be connected to a 0.47 µF capacitor approved for phase-phase operation (IEC 384-14) to meet the EC EMC directive (2004/108/EC). The capacitor must be connected to the two phases to which the temperature transmitter is connected. See fig. 9.

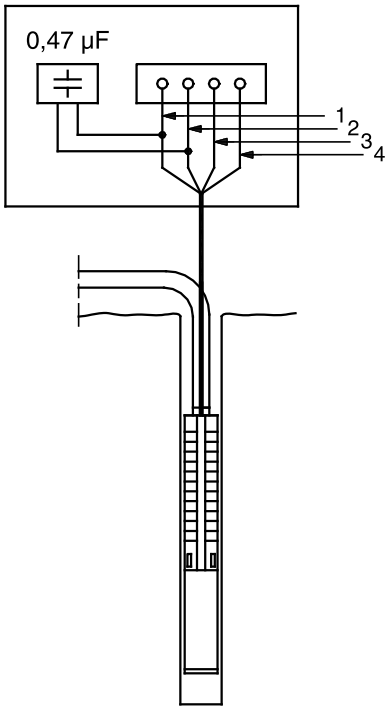

Fig. 9 Connection of capacitor

Colours of the leads		
Lead	**Flat cable**	**Single leads**
1 = L1	Brown	Black
2 = L2	Black	Yellow
3 = L3	Grey	Red
4 = PE	Yellow/green	Green

The motors are wound for direct-on-line starting or star-delta starting, and the starting current is between four and six times the rated current of the motor.

The run-up time of the pump is only about 0.1 second. Direct-on-line starting is therefore normally approved by the power supply company.

6.1 Frequency converter operation

6.1.1 Grundfos motors

Three-phase Grundfos motors can be connected to a frequency converter.

Caution

If an MS motor with temperature transmitter is connected to a frequency converter, a fuse incorporated in the transmitter will melt and the transmitter will be inactive. The transmitter cannot be reactivated. This means that the motor will operate like a motor without a temperature transmitter.

If a temperature transmitter is required, Grundfos offers a Pt100 or Pt1000 sensor for the submersible motor.

Caution

The motor should not run at a frequency higher than the rated frequency (50 or 60 Hz) during frequency converter operation. In connection with pump operation, never reduce the frequency (and consequently the speed) to such a level that the necessary flow of cooling liquid past the motor is no longer ensured.

To avoid damage to the pump part, the motor must stop when the pump flow falls below 0.1 x nominal flow.

Depending on the frequency converter type, it may expose the motor to detrimental voltage peaks.

Warning

MS 402 motors for supply voltages up to and including 440 V (see motor nameplate) must be protected against voltage peaks higher than 650 V (peak value) between the supply terminals.

We recommend that you protect other motors against voltage peaks higher than 850 V.

The above disturbance can be abated by installing an RC filter between the frequency converter and the motor.

Possible increased acoustic noise from the motor can be abated by installing an LC filter which will also eliminate voltage peaks from the frequency converter.

We recommend that you install an LC filter when using a frequency converter. See section *6.7.6 Frequency converter operation*.

For further details, contact your frequency converter supplier or Grundfos.

6.1.2 Other motor makes than Grundfos

Contact Grundfos or the motor manufacturer.

6.2 Motor protection

6.2.1 Single-phase motors

Single-phase MS 402 motors incorporate a thermal switch and require no additional motor protection.

Warning

When the motor has been thermally switched off, the motor terminals are still live. When the motor has cooled sufficiently, it will restart automatically.

Single-phase MS 4000 motors must be protected. A protective device can either be incorporated in a control box or be separate.

Franklin 4" PSC motors must be connected to a motor-protective circuit breaker.

6.2.2 Three-phase motors

MS motors are available with or without a built-in temperature transmitter.

The following motors must be protected by a motor-protective circuit breaker with thermal relay, or a MP 204 and contactor(s):

- motors with a built-in and intact temperature transmitter
- motors with or without a defective temperature transmitter
- motors with or without a Pt100 sensor.

MMS motors have no built-in temperature transmitter.
The Pt100 and the Pt1000 sensor are available as an accessory.

6.2.3 Required settings of motor-protective circuit breaker

For cold motors, the tripping time of the motor-protective circuit breaker must be less than 10 seconds at 5 times the rated maximum current of the motor. During normal operating conditions the motor must be running at full speed in less than 3 seconds.

Caution

If this requirement is not met, the motor warranty will be invalidated.

In order to ensure optimum motor protection, the motor-protective circuit breaker should be set as follows:

1. Set the motor-protective circuit breaker to the rated maximum current of the motor.
2. Start the pump and let it run for half an hour at normal performance.
3. Slowly grade down the scale indicator until the motor trip point is reached.
4. Increase the setting by 5 %.

The highest permissible setting is the rated maximum current of the motor.

For motors wound for star-delta starting, the motor-protective circuit breaker should be set as above, but the maximum setting should be rated maximum current x 0.58.

The highest permissible startup time for star-delta starting or autotransformer starting is 2 seconds.

6.3 Lightning protection

The installation can be fitted with a special overvoltage protective device to protect the motor from voltage surges in the power supply lines when lightning strikes somewhere in the area. See fig. 10.

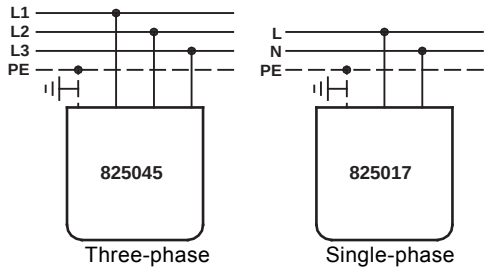

TM00 1357 3605

Fig. 10 Fitting an overvoltage protective device

The overvoltage protective device will not, however, protect the motor against a direct stroke of lightning.

The overvoltage protective device should be connected to the installation as close as possible to the motor and always in accordance with local regulations. Ask Grundfos for lightning protective devices.

MS 402 motors, however, require no further lightning protection as they are highly insulated.

A special cable termination kit with a built-in overvoltage protective device is available for Grundfos 4" motors (product No 799911 or 799912).

6.4 Cable sizing

Caution Submersible motor cables are dimensioned for submersion in liquid, and will not necessarily have sufficient cross-section to be in free air.

Make sure that the submersible drop cable can withstand permanent submersion in the actual liquid and at the actual temperature.

The cross-section (q) of the cable must meet the following requirements:

The submersible drop cable must be sized to the rated maximum current (I_n) of the motor.

The cross-section must be sufficient to make a voltage drop over the cable acceptable.

Grundfos supplies submersible drop cables for a wide range of installations. For correct cable sizing, Grundfos offers a cable sizing tool on the USB stick supplied with the motor.

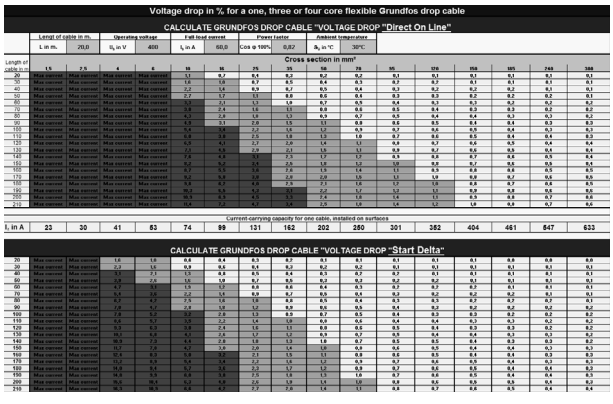

TM05 8770 2613

Fig. 11 Cable sizing tool

The sizing tool provides an accurate calculation of the voltage drop at a given cross-section on the basis of the following parameters:

- cable length
- operating voltage
- full-load current
- power factor
- ambient temperature.

You can calculate the voltage drop both for direct-on-line and star-delta starting.

In order to minimise operating losses, the cable cross-section may be increased. This is only cost-efficient if the borehole provides the necessary space, and if the operating time of the pump is long. The cable sizing tool also provides a power loss calculator that shows the potential savings of an increased cross-section.

As an alternative to the cable sizing tool, select the cross-section on the basis of the current values of the given cables.

The cross-section of the submersible drop cable must be large enough to meet the voltage quality requirements specified in section *6. Electrical connection*.

Determine the voltage drop for the cross-section of the submersible drop cable by means of the diagrams on pages 17 to 20.

Use the following formula:

I = Rated maximum current of the motor.

For star-delta starting, I = rated maximum current of the motor x 0.58.

Lx = Length of cable converted to a voltage drop of 1 % of the nominal voltage.

$$Lx = \frac{\text{length of drop cable}}{\text{permissible voltage drop in \%}}$$

q = Cross-section of submersible drop cable.

Draw a straight line between the actual I-value and the Lx-value. Where the line intersects the q-axis, select the cross-section that lies right above the intersection.

The diagrams are made on the basis of the formulas:

Single-phase submersible motor

$$L = \frac{U \times \Delta U}{I \times 2 \times 100 \times \left(\cos\varphi \times \frac{\rho}{q} + \sin\varphi \times XI\right)}$$

Three-phase submersible motor

$$L = \frac{U \times \Delta U}{I \times 1.73 \times 100 \times \left(\cos\varphi \times \frac{\rho}{q} + \sin\varphi \times XI\right)}$$

L = Length of submersible drop cable [m]
U = Rated voltage [V]
ΔU = Voltage drop [%]
I = Rated maximum current of the motor [A]
cos φ = 0.9
ρ = Specific resistance: 0.02 [Ωmm^2/m]
q = Cross-section of submersible drop cable [mm^2]
sin φ = 0.436
XI = Inductive resistance: 0.078 x 10^{-3} [Ω/m].

6.5 Control of single-phase MS 402 motors

Warning

The single-phase MS 402 motor incorporates motor protection which cuts out the motor in case of excessive winding temperatures while the motor is still supplied with voltage. Allow for this, when the motor forms part of a control system.

If a compressor is included in a control system together with an ochre filter, the compressor will run continuously once the motor protection has cut out the motor, unless other special precautions have been taken.

6.6 Connection of single-phase motors

6.6.1 2-wire motors

MS 402 2-wire motors incorporate motor protection and a starter device and can therefore be connected direct to the mains. See fig. 12.

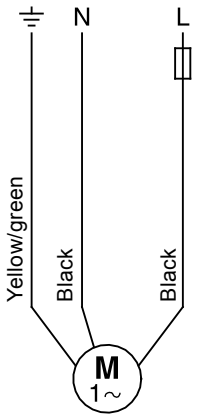

TM00 1358 5092

Fig. 12 2-wire motors

6.6.2 PSC motors

The PSC motors are connected to the mains via a run capacitor which should be sized for continuous operation.

Select the correct capacitor size from the table below:

Motor [kW]	Capacitor [µF] 400 V, 50 Hz
0.25	12.5
0.37	16
0.55	20
0.75	30
1.10	40
1.50	50
2.20	75

MS 402 PSC motors incorporate motor protection and should be connected to the mains as shown in fig. 13.

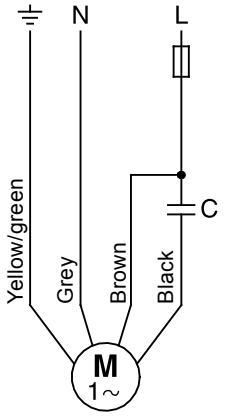

TM00 1359 5092

Fig. 13 PSC motors

See www.franklin-electric.com and fig. 14.

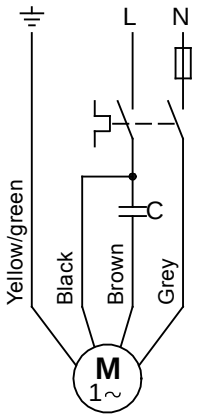

TM00 1361 1200

Fig. 14 Franklin motors

6.6.3 3-wire motors

MS 4000 3-wire motors must be connected to the mains via a Grundfos SA-SPM 5 (60 Hz), 7 or 8 (50 Hz) control box incorporating motor protection.

MS 402 3-wire motors incorporate motor protection and should be connected to the mains via a Grundfos control box SA-SPM 2, 3 or 5 (60 Hz), 7 or 8 (50 Hz) without motor protection.

6.7 Connection of three-phase motors

Three-phase motors must be protected.
See section *6.2.2 Three-phase motors*.

For electrical connection via the MP 204, see the separate installation and operating instructions for this unit.

When a conventional motor-protective circuit breaker is being used, the electrical connection should be carried out as described below.

6.7.1 Checking the direction of rotation

Caution The pump must not be started until the suction interconnector has been completely submerged in the liquid.

When the pump has been connected to the power supply, check the direction of rotation:

1. Start the pump and measure quantity of water and head.
2. Stop the pump and interchange two phases.
3. Start the pump and measure quantity of water and head.
4. Stop the pump.
5. Compare the two results. The connection giving the larger quantity of water and the higher head is the correct one.

6.7.2 Grundfos motors - direct-on-line starting

The connection of Grundfos motors wound for direct-on-line starting appears from the table below and fig. 15.

Mains	Cable/connection
	Grundfos 4" and 6" motors
PE	PE (yellow/green)
L1	U (brown)
L2	V (black)
L3	W (grey)

Check the direction of rotation as described in section *6.7.1 Checking the direction of rotation*.

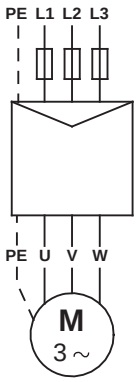

TM03 2099 3705

Fig. 15 Grundfos motors - direct-on-line starting

6.7.3 Grundfos motors - star-delta starting

The connection of Grundfos motors wound for star-delta starting appears from the table below and fig. 16.

Connection	Grundfos 6" motors
PE	Yellow/green
U1	Brown
V1	Black
W1	Grey
W2	Brown
U2	Black
V2	Grey

Check the direction of rotation as described in section *6.7.1 Checking the direction of rotation*.

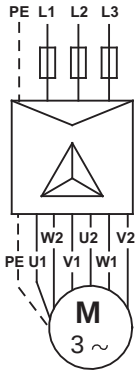

TM03 2100 3705

Fig. 16 Grundfos motors wound for star-delta starting

If direct-on-line starting is required, the motors should be connected as shown in fig. 17.

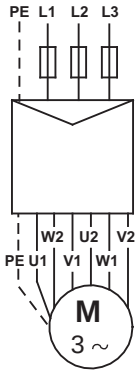

TM03 2101 3705

Fig. 17 Grundfos motors wound for star-delta starting - direct-on-line starting

6.7.4 Connection in the case of unidentified cable marking/connection (Franklin motors)

If you do not know where the individual leads are to be connected to the mains in order to ensure the correct direction of rotation, proceed as follows:

Motors wound for direct-on-line starting

Connect the pump to the mains as is expected to be right.

Then check the direction of rotation as described in section *6.7.1 Checking the direction of rotation*.

Motors wound for star-delta starting

Determine the windings of the motor by means of an ohmmeter and name the lead sets for the individual windings accordingly: U1-U2, V1-V2, W1-W2. See fig. 18.

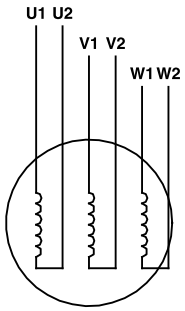

TM00 1367 5092

Fig. 18 Unidentified cable marking/connection - motors wound for star-delta starting

If star-delta starting is required, connect the leads as shown in fig. 16.

If direct-on-line starting is required, connect the leads as shown in fig. 17.

Then check the direction of rotation as described in section *6.7.1 Checking the direction of rotation*.

6.7.5 Soft starter

We only recommend the use of soft starters which control the voltage on all three phases and which are provided with a bypass switch.

Ramp times: Maximum 3 seconds.

For further details, contact your soft starter supplier or Grundfos.

6.7.6 Frequency converter operation

Three-phase MS motors can be connected to a frequency converter.

Note To enable the monitoring of the motor temperature, we recommend that you install a Pt100/Pt1000 sensor together with a PR5714 or CU 220 (50 Hz).

Permissible frequency ranges: 30-50 Hz and 30-60 Hz.

Ramp times: Maximum 3 seconds for start and stop.

Depending on the type, the frequency converter may cause increased acoustic noise from the motor. Furthermore, it may expose the motor to detrimental voltage peaks. This can be abated by installing an LC filter between the frequency converter and the motor.

For further details, contact your frequency converter supplier or Grundfos.

7. Installation

We recommend that you first fit a 50 cm long pipe to the pump to facilitate handling of the pump during installation.

Caution Lift the pump to vertical position before removing it from the wooden box.

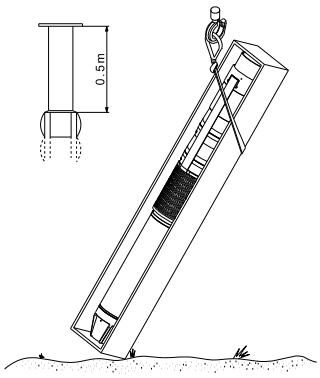

TM05 1617 3311

Fig. 19 Lifting the pump into vertical position

7.1 Fitting the motor to the pump

When the pump part and the motor are supplied as separate units (long pumps), fit the motor to the pump as follows:

1. Use pipe clamps when handling the motor.
2. Place the motor in vertical position at the borehole seal. See fig. 20.

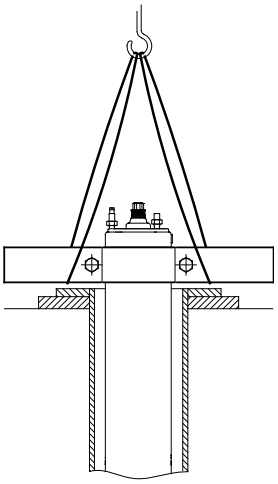

TM00 5259 2402

Fig. 20 Motor in vertical position

3. Lift the pump part by means of pipe clamps fitted to the extension pipe. See fig. 21.

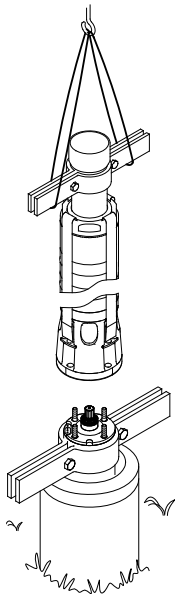

TM02 5263 2502

Fig. 21 Lifting the pump into position

4. Place the pump part on top of the motor.
5. Fit and tighten the nuts. See table below.

Caution Make sure that the coupling between the pump and motor engages properly.

The bolts and nuts securing the straps to the pump must be cross-tightened to the following torques:

Bolt/nut	Torque [Nm]
M8	18
M10	35
M12	45
M16	120
SP 215, 50 Hz, with more than 8 stages SP 215, 60 Hz, with more than 5 stages	150

When fitting the motor to the pump part, cross-tighten the nuts to the following torques:

Staybolt diameter	Torque [Nm]
5/16 UNF	18
1/2 UNF	50
M8	18
M12	70
M16	150
M20	280

Caution Make sure that the pump chambers are aligned when assembly has been completed.

7.2 Removing and fitting the cable guard

If the cable guard is screwed on to the pump, it should be removed and fitted by means of screws.

Caution Make sure that the pump chambers are aligned when the cable guard has been fitted.

7.3 Connecting the submersible drop cable

7.3.1 Grundfos motors

Before connecting the submersible drop cable to the motor, make sure that the cable socket is clean and dry.

To facilitate the connection of the cable, lubricate the rubber parts of the cable plug with non-conducting silicone paste.

Tighten the screws holding the cable to these torques [Nm]:

MS 402: 2.0
MS 4000: 3.0
MS 6000: 4.5
MMS 6: 20
MMS 8000: 18
MMS 10000: 18
MMS 12000: 15

7.4 Riser pipe

If a tool, e.g. a chain pipe wrench, is used when the riser pipe is fitted to the pump, the pump must only be gripped by the pump discharge chamber.

The threaded joints on the riser pipe must all be well cut and fit together to ensure that they do not work loose when subjected to torque reaction caused by the starting and stopping of the pump.

The thread on the first section of the riser pipe which is to be screwed into the pump should not be longer than the threads in the pump.

If noise may be transmitted to the building through the pipework, we recommend that you use plastic pipes.

Note We recommend plastic pipes for 4" pumps only.

When plastic pipes are used, secure the pump by an unloaded straining wire to be fastened to the discharge chamber of the pump. See fig. 22.

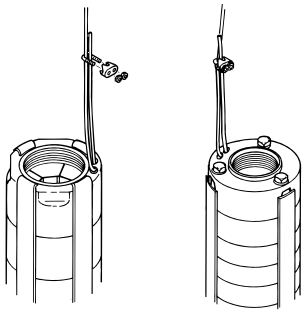

TM00 1368 2298

Fig. 22 Fixing the straining wire

When connecting plastic pipes, use a compression coupling between the pump and the first pipe section.

Where flanged pipes are used, the flanges should be slotted to take the submersible drop cable and a water indicator hose, if fitted.

7.5 Maximum installation depth below water level [m]

Grundfos MS 402: 150
Grundfos MS 4000: 600
Grundfos MS 6000: 600
Grundfos MMS: 600
Franklin motors: 350

7.6 Cable clips

Fit cable clips every 3 metres to fix the submersible drop cable and the straining wire, if fitted, to the riser pipe of the pump.

Grundfos supplies cable clip sets on request.

1. Cut off the rubber band so that the piece with no slit becomes as long as possible.
2. Insert a button in the first slit.
3. Position the wire alongside the submersible drop cable as shown in fig. 23.

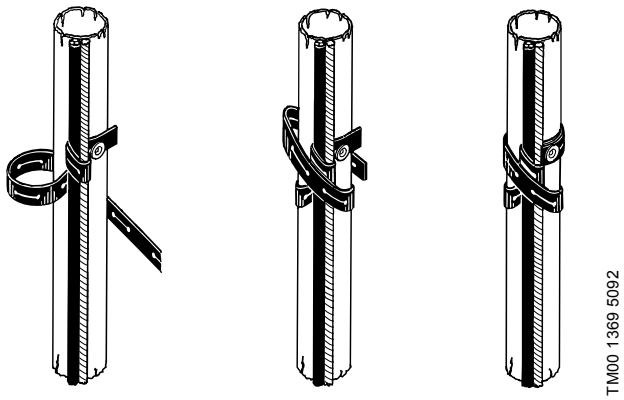

Fig. 23 Fitting the cable clips

4. Wind the band once around the wire and the cable. Then wind it tightly at least twice around the pipe, wire and the cable.
5. Push the slit over the button and cut off the band.

Where large cable cross-sections are used, it will be necessary to wind the band several times.

Where plastic pipes are used, some slackness must be left between each cable clip as plastic pipes expand when loaded.

When flanged pipes are used, the cable clips should be fitted above and below each joint.

7.7 Lowering the pump

We recommend that you check the borehole by means of an inside calliper before lowering the pump to ensure unobstructed passage.

Lower the pump carefully into the borehole, taking care not to damage the motor cable and the submersible drop cable.

Caution Do not lower or lift the pump by means of the motor cable.

7.8 Installation depth

The dynamic water level should always be above the suction interconnector of the pump. See section *5.2 Positional requirements* and fig. 24.

Minimum inlet pressure is indicated in the NPSH curve for the pump. The minimum safety margin should be 1 metre head.

We recommend that you install the pump so that the motor part is above the well screen in order to ensure optimum cooling. See section *5.4 Liquid temperatures/cooling*.

When the pump has been installed to the required depth, the installation should be finished by means of a borehole seal.

Slacken the straining wire so that it becomes unloaded and lock it to the borehole seal by means of wire locks.

Note For pumps fitted with plastic pipes, the expansion of the pipes when loaded should be taken into consideration, when deciding on the installation depth of the pump.

8. Startup and operation

8.1 Startup

When the pump has been connected correctly and it is submerged in the liquid to be pumped, it should be started with the discharge valve closed off to approximately 1/3 of its maximum volume of water.

Check the direction of rotation as described in section *6.7.1 Checking the direction of rotation*.

If there are impurities in the water, open the valve gradually as the water becomes clearer. Do not stop the pump until the water is completely clean, as otherwise the pump parts and the non-return valve may become blocked.

As the valve is being opened, check the drawdown of the water level to ensure that the pump always remains submerged.

The dynamic water level should always be above the suction interconnector of the pump. See section *5.2 Positional requirements* and fig. 24.

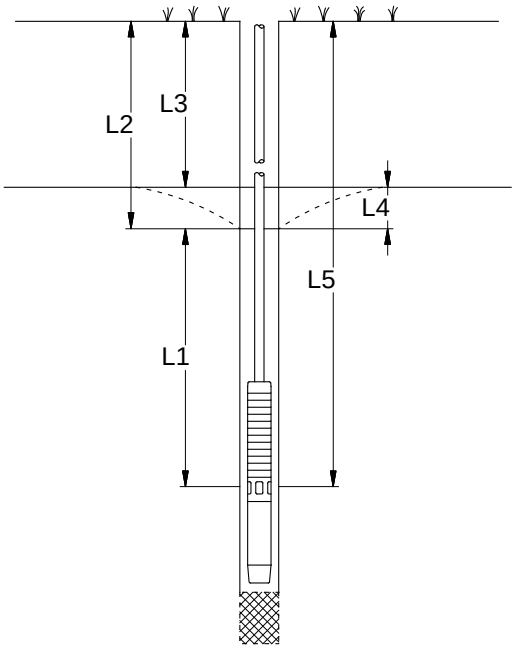

Fig. 24 Comparison of various water levels

L1: Minimum installation depth below dynamic water level. We recommend minimum 1 metre.

L2: Depth to dynamic water level.

L3: Depth to static water level.

L4: Drawdown. This is the difference between the dynamic and the static water levels.

L5: Installation depth.

If the pump can pump more than yielded by the well, we recommend that you install the Grundfos MP 204 motor protector or some other type of dry-running protection.

If no water level electrodes or level switches are installed, the water level may be drawn down to the suction interconnector of the pump and the pump will then draw in air.

Caution Long time of operation with water containing air may damage the pump and cause insufficient cooling of the motor.

8.2 Operation

8.2.1 Minimum flow rate

To ensure the necessary cooling of the motor, the pump flow rate should never be set so low that the cooling requirements in section *5.4 Liquid temperatures/cooling* cannot be met.

8.2.2 Frequency of starts and stops

Motor type		Number of starts
MS 402		• Minimum 1 per year is recommended. • Maximum 100 per hour. • Maximum 300 per day.
MS 4000		• Minimum 1 per year is recommended. • Maximum 100 per hour. • Maximum 300 per day.
MS 6000		• Minimum 1 per year is recommended. • Maximum 30 per hour. • Maximum 300 per day.
MMS6	PVC windings	• Minimum 1 per year is recommended. • Maximum 3 per hour. • Maximum 40 per day.
	PE/PA windings	• Minimum 1 per year is recommended. • Maximum 10 per hour. • Maximum 70 per day.
MMS 8000	PVC windings	• Minimum 1 per year is recommended. • Maximum 3 per hour. • Maximum 30 per day.
	PE/PA windings	• Minimum 1 per year is recommended. • Maximum 8 per hour. • Maximum 60 per day.
MMS 10000	PVC windings	• Minimum 1 per year is recommended. • Maximum 2 per hour. • Maximum 20 per day.
	PE/PA windings	• Minimum 1 per year is recommended. • Maximum 6 per hour. • Maximum 50 per day.
MMS 12000	PVC windings	• Minimum 1 per year is recommended. • Maximum 2 per hour. • Maximum 15 per day.
	PE/PA windings	• Minimum 1 per year is recommended. • Maximum 5 per hour. • Maximum 40 per day.

9. Maintenance and service

All pumps are easy to service.

Service kits and service tools are available from Grundfos.

The pumps can be serviced at a Grundfos service centre.

Warning

If a pump has been used for a liquid which is injurious to health or toxic, the pump will be classified as contaminated.

If Grundfos is requested to service the pump, Grundfos must be contacted with details about the pumped liquid, etc. before the pump is returned for service. Otherwise Grundfos can refuse to accept the pump for service.

Possible costs of returning the pump are paid by the customer.

10. Fault finding

Fault	Cause	Remedy
1. The pump does not run.	a) The fuses are blown.	Replace the blown fuses. If the new ones blow too, check the electric installation and the submersible drop cable.
	b) The ELCB or the voltage-operated ELCB has tripped.	Cut in the circuit breaker.
	c) No power supply.	Contact the power supply company.
	d) The motor-protective circuit breaker has tripped.	Reset the motor-protective circuit breaker (automatically or possibly manually). Check the voltage if it trips again. If the voltage is okay, see items 1e to 1h.
	e) The motor-protective circuit breaker/contactor is defective.	Replace the motor-protective circuit breaker/contactor.
	f) Starter device is defective.	Repair or replace the starter device.
	g) The control circuit has been interrupted or is defective.	Check the electric installation.
	h) The dry-running protection has cut off the power supply to the pump due to low water level.	Check the water level. If it is okay, check the water level electrodes/level switch.
	i) The pump/submersible drop cable is defective.	Repair or replace the pump/cable.
2. The pump runs but gives no water.	a) The discharge valve is closed.	Open the valve.
	b) No water or too low water level in borehole.	See item 3a.
	c) The non-return valve is stuck in closed position.	Pull out the pump and clean or replace the valve.
	d) The suction strainer is blocked.	Pull out the pump and clean the strainer.
	e) The pump is defective.	Repair or replace the pump.
3. The pump runs at reduced performance.	a) The drawdown is larger than anticipated.	Increase the installation depth of the pump, throttle the pump or install a pump with a smaller performance.
	b) Wrong direction of rotation.	See section *6.7.1 Checking the direction of rotation*.
	c) The valves in the discharge pipe are partly closed/blocked.	Clean or replace the valves.
	d) The discharge pipe is partly blocked by impurities (ochre).	Clean or replace the pipe.
	e) The non-return valve of the pump is partly blocked.	Pull out the pump and clean or replace the valve.
	f) The pump and the riser pipe are partly blocked by impurities (ochre).	Pull out the pump and clean or replace it. Clean the pipes.
	g) The pump is defective.	Repair or replace the pump.
	h) Leakage in the pipework.	Check and repair the pipework.
	i) The riser pipe is defective.	Replace the pipe.
4. Frequent starts and stops.	a) The differential of the pressure switch between the start and stop pressures is too small.	Increase the differential. The stop pressure must not exceed the operating pressure of the pressure tank, and the start pressure should be high enough to ensure sufficient water supply.
	b) The water level electrodes or level switches in the reservoir have not been installed correctly.	Adjust the intervals of the electrodes/level switches to ensure suitable time between the cutting-in and cutting-out of the pump. See installation and operating instructions for the electrodes/level switches. If the intervals between stop/start cannot be changed via the automatics, the pump performance may be reduced by throttling the discharge valve.
	c) The non-return valve is leaking or stuck half-open.	Pull out the pump and clean or replace the valve.
	d) The tank precharge pressure is too small.	Adjust the tank precharge pressure in accordance with its installation and operating instructions.
	e) The tank is too small.	Increase the capacity of the tank by replacing or supplementing with another tank.
	f) The diaphragm of the tank is defective.	Check the diaphragm tank.

11. Checking motor and cable

1. Supply voltage 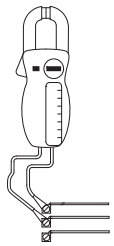 TM00 1371 5092	Measure the voltage between the phases by means of a voltmeter. On single-phase motors, measure between phase and neutral or between two phases, depending on the type of supply. Connect the voltmeter to the terminals in the motor-protective circuit breaker.	The voltage should, when the motor is loaded, be within the range specified in section *6. Electrical connection*. The motor may burn if there are larger variations in voltage. Large variations in voltage indicate poor power supply, and the pump should be stopped until the defect has been remedied.
2. Current consumption 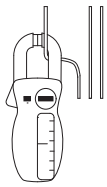 TM00 1372 5092	Measure the amps of each phase while the pump is operating at a constant discharge head (if possible, at the performance where the motor is most heavily loaded). For maximum operating current, see nameplate.	On three-phase motors, the difference between the current in the phase with the highest consumption and the current in the phase with the lowest consumption should not exceed 5 %. If so, or if the current exceeds the rated current, there are the following possible faults: • The contacts of the motor-protective circuit breaker are burnt. Replace the contacts or the control box for single-phase operation. • Poor connection in leads, possibly in the cable joint. See item 3. • Too high or too low supply voltage. See item 1. • The motor windings are short-circuited or partly disjointed. See item 3. • Damaged pump is causing the motor to be overloaded. Pull out the pump for overhaul. • The resistance value of the motor windings deviates too much (three-phase). Move the phases in phase order to a more uniform load. If this does not help, see item 3.
Items 3 and 4: Measurement is not necessary when the supply voltage and the current consumption are normal.		
3. Winding resistance 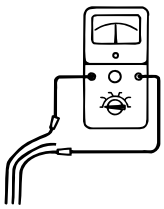 TM00 1373 5092	Disconnect the submersible drop cable from the motor-protective circuit breaker. Measure the winding resistance between the leads of the drop cable.	For three-phase motors, the deviation between the highest and the lowest value should not exceed 10 %. If the deviation is higher, pull out the pump. Measure motor, motor cable and drop cable separately, and repair or replace defective parts. **Note:** The operating winding of single-phase 3-wire motors will assume the lowest resistance value.
4. Insulation resistance 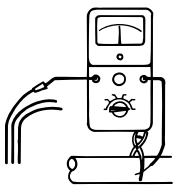 TM00 1374 5092	Disconnect the submersible drop cable from the motor-protective circuit breaker. Measure the insulation resistance from each phase to earth (frame). Make sure that the earth connection was made carefully.	If the insulation resistance is less than 0.5 MΩ, the pump should be pulled out for motor or cable repair. Local regulations may specify other values for the insulation resistance.

12. Disposal

This product or parts of it must be disposed of in an environmentally sound way:

1. Use the public or private waste collection service.
2. If this is not possible, contact the nearest Grundfos company or service workshop.

Subject to alterations.

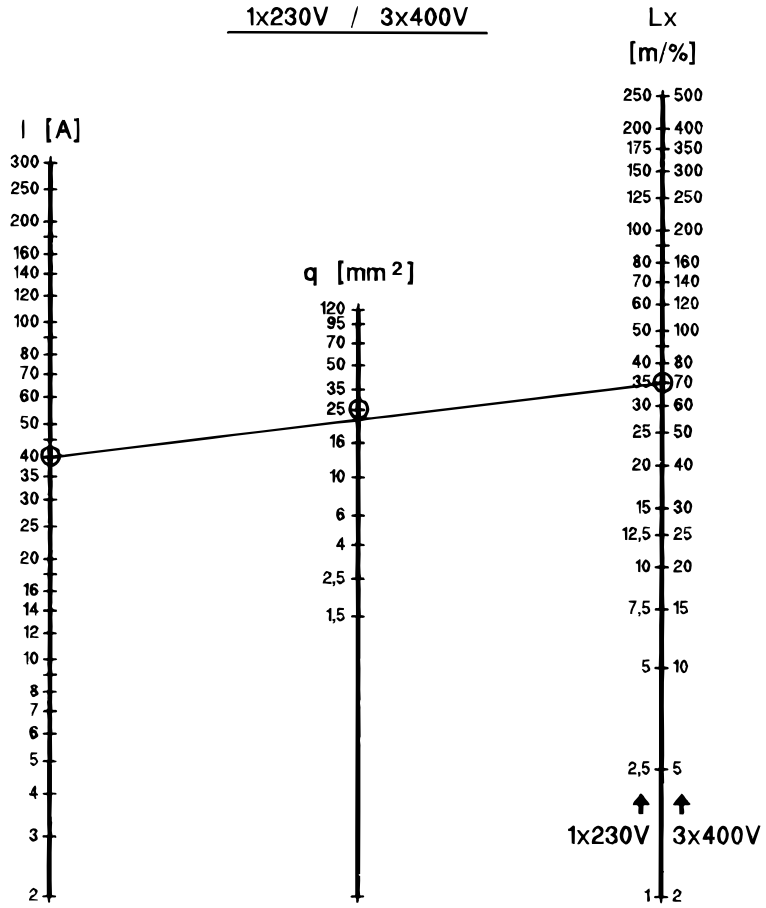

TM00 1346 5092

Example:

U = 3 x 400 V
I = **40 A**
L = 140 m
ΔU = 2 %

$Lx = \frac{L}{\Delta U} = \frac{140}{2\,\%} =$ **70 m** = q ⇒ 25 mm²

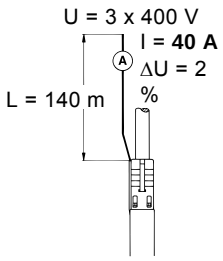

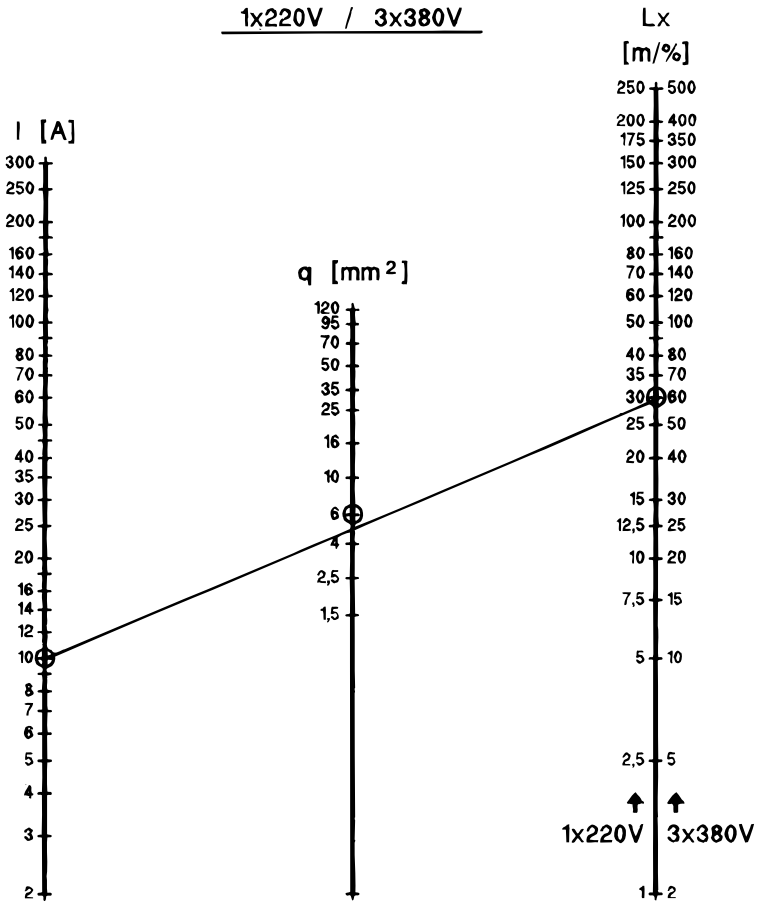

TM00 1345 5092

Example:

U = 3 x 380 V
I = **10 A**
L = 120 m
ΔU = 2 %

$Lx = \frac{L}{\Delta U} = \frac{120}{2\,\%} =$ **60 m** = q ⇒ 6 mm²

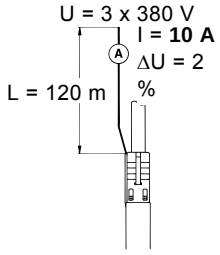

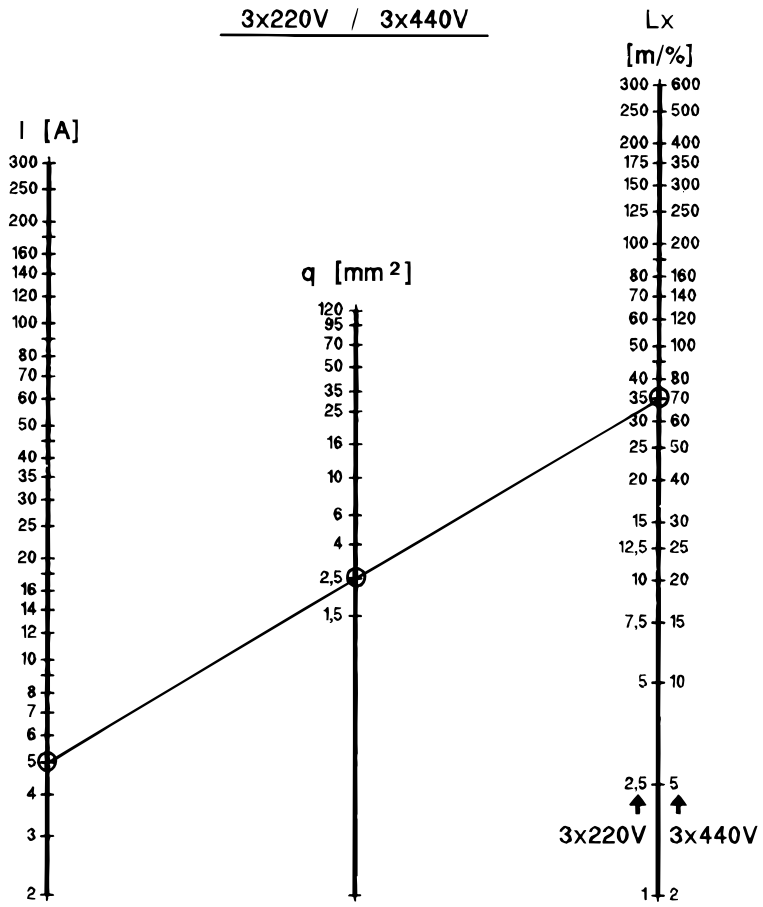

TM00 1348 5092

Example:

U = 3 x 220 V
I = **5 A**
L = 105 m
ΔU = 3 %

$$Lx = \frac{L}{\Delta U} = \frac{105}{3\,\%} = \mathbf{35\ m} = q \Rightarrow 2{,}5\ mm^2$$

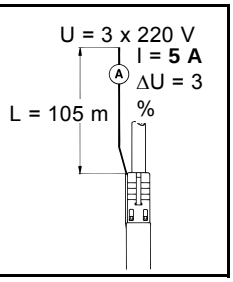

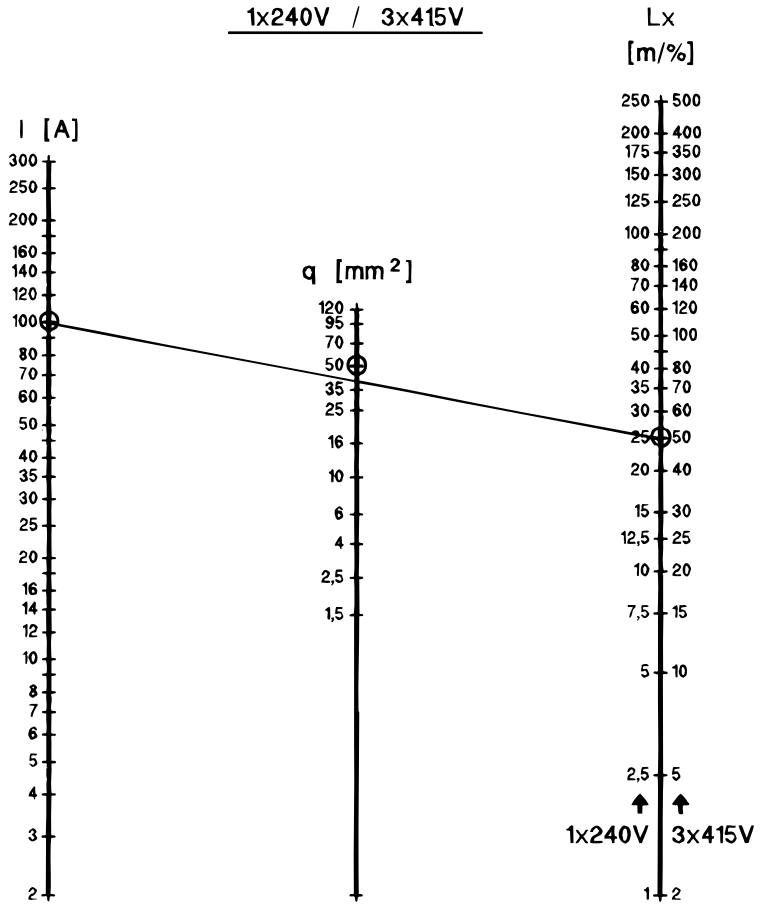

TM00 1347 5092

Example:

U = 3 x 415 V
I = **100 A**
L = 150 m
ΔU = 3 %

$$Lx = \frac{L}{\Delta U} = \frac{150}{3\,\%} = \mathbf{50\ m} = q \Rightarrow 50\ mm^2$$

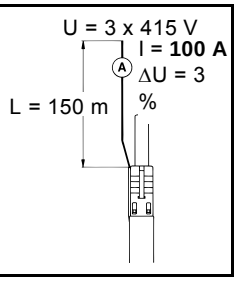

SP1 - SP 2 - SP 3 - SP 5

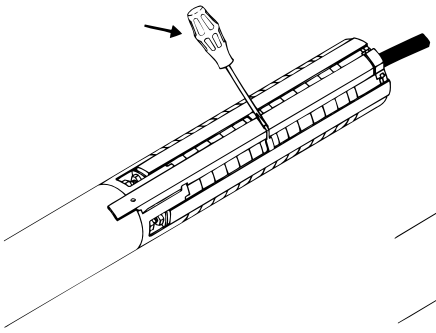

Fig. 1

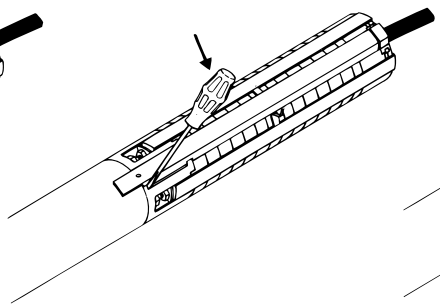

Fig. 2

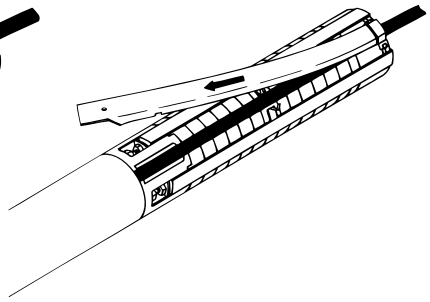

Fig. 3

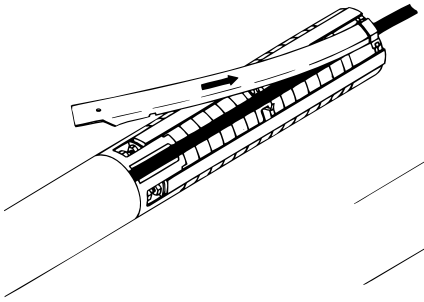

Fig. 1

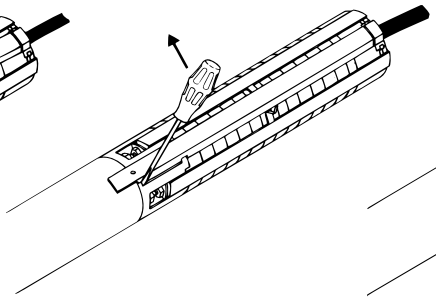

Fig. 2

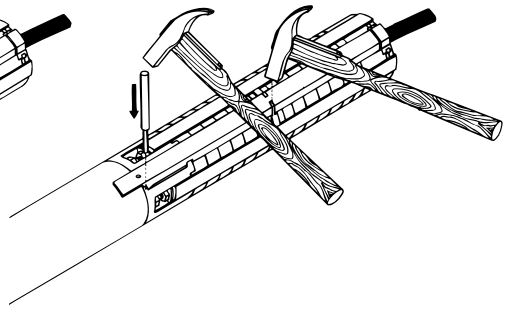

Fig. 3

TM00 1323 5092

SP 7 - SP 9 - SP 11 - SP 14 - SP 17 - SP 30 - SP 46 - SP 60

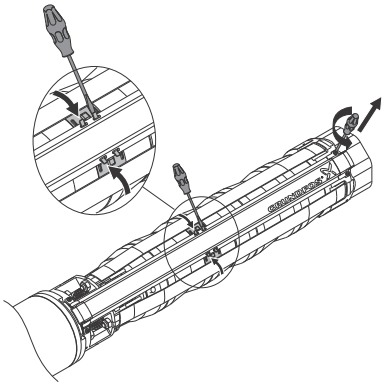

Fig. 1

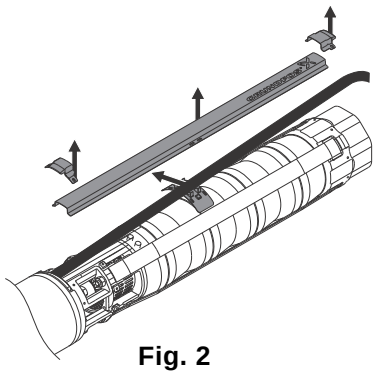

Fig. 2

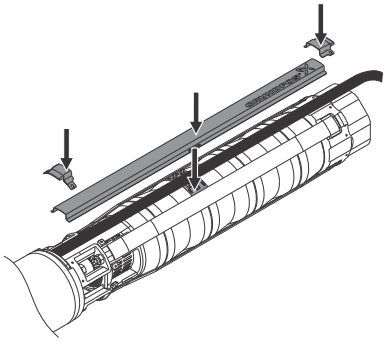

Fig. 1

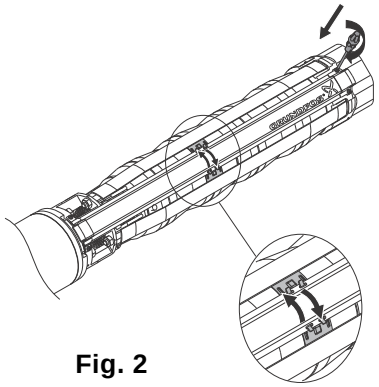

Fig. 2

TM06 0693 0814

SP 77 - SP 95 - SP 125 - SP 160 - SP 215

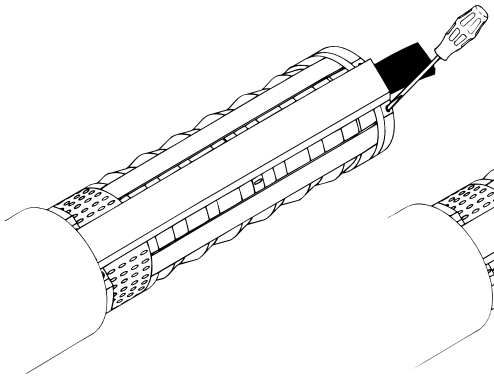

Fig. 1

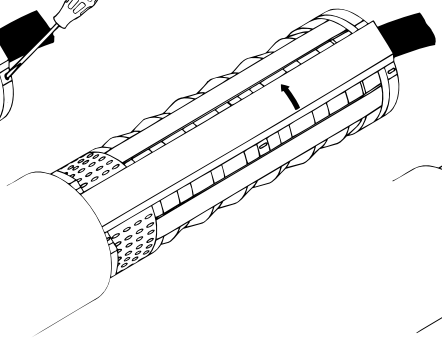

Fig. 2

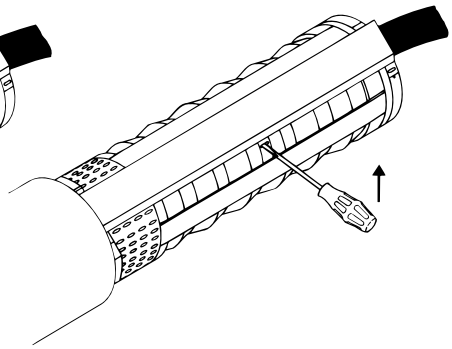

Fig. 3

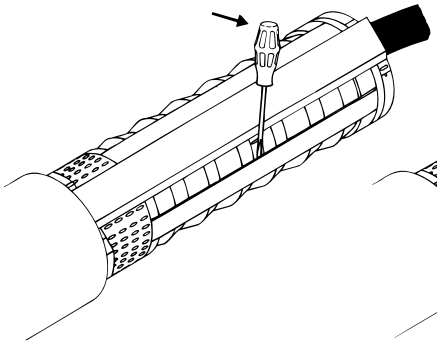

Fig. 1

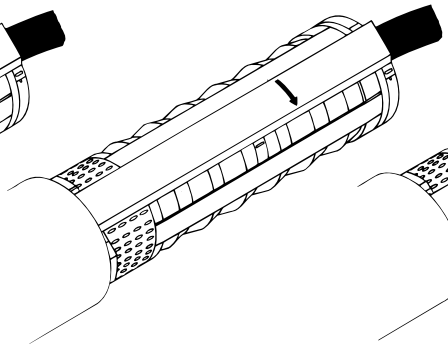

Fig. 2

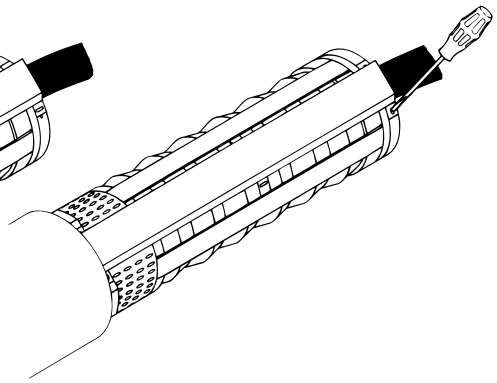

Fig. 3

TM00 1326 5092

Argentina
Bombas GRUNDFOS de Argentina S.A.
Ruta Panamericana km. 37.500 Centro Industrial Garin
1619 Garín Pcia. de B.A.
Phone: +54-3327 414 444
Telefax: +54-3327 45 3190

Australia
GRUNDFOS Pumps Pty. Ltd.
P.O. Box 2040
Regency Park
South Australia 5942
Phone: +61-8-8461-4611
Telefax: +61-8-8340 0155

Austria
GRUNDFOS Pumpen Vertrieb Ges.m.b.H.
Grundfosstraße 2
A-5082 Grödig/Salzburg
Tel.: +43-6246-883-0
Telefax: +43-6246-883-30

Belgium
N.V. GRUNDFOS Bellux S.A.
Boomsesteenweg 81-83
B-2630 Aartselaar
Tél.: +32-3-870 7300
Télécopie: +32-3-870 7301

Belarus
Представительство ГРУНДФОС в Минске
220125, Минск
ул. Шафарнянская, 11, оф. 56, БЦ «Порт»
Тел.: +7 (375 17) 286 39 72/73
Факс: +7 (375 17) 286 39 71
E-mail: minsk@grundfos.com

Bosna and Herzegovina
GRUNDFOS Sarajevo
Zmaja od Bosne 7-7A,
BH-71000 Sarajevo
Phone: +387 33 592 480
Telefax: +387 33 590 465
www.ba.grundfos.com
e-mail: grundfos@bih.net.ba

Brazil
BOMBAS GRUNDFOS DO BRASIL
Av. Humberto de Alencar Castelo Branco, 630
CEP 09850 - 300
São Bernardo do Campo - SP
Phone: +55-11 4393 5533
Telefax: +55-11 4343 5015

Bulgaria
Grundfos Bulgaria EOOD
Slatina District
Iztochna Tangenta street no. 100
BG - 1592 Sofia
Tel. +359 2 49 22 200
Fax. +359 2 49 22 201
email: bulgaria@grundfos.bg

Canada
GRUNDFOS Canada Inc.
2941 Brighton Road
Oakville, Ontario
L6H 6C9
Phone: +1-905 829 9533
Telefax: +1-905 829 9512

China
GRUNDFOS Pumps (Shanghai) Co. Ltd.
10F The Hub, No. 33 Suhong Road
Minhang District
Shanghai 201106
PRC
Phone: +86 21 612 252 22
Telefax: +86 21 612 253 33

Croatia
GRUNDFOS CROATIA d.o.o.
Buzinski prilaz 38, Buzin
HR-10010 Zagreb
Phone: +385 1 6595 400
Telefax: +385 1 6595 499
www.hr.grundfos.com

Czech Republic
GRUNDFOS s.r.o.
Čajkovského 21
779 00 Olomouc
Phone: +420-585-716 111
Telefax: +420-585-716 299

Denmark
GRUNDFOS DK A/S
Martin Bachs Vej 3
DK-8850 Bjerringbro
Tlf.: +45-87 50 50 50
Telefax: +45-87 50 51 51
E-mail: info_GDK@grundfos.com
www.grundfos.com/DK

Estonia
GRUNDFOS Pumps Eesti OÜ
Peterburi tee 92G
11415 Tallinn
Tel: + 372 606 1690
Fax: + 372 606 1691

Finland
OY GRUNDFOS Pumput AB
Trukkikuja 1
FI-01360 Vantaa
Phone: +358-(0) 207 889 500
Telefax: +358-(0) 207 889 550

France
Pompes GRUNDFOS Distribution S.A.
Parc d'Activités de Chesnes
57, rue de Malacombe
F-38290 St. Quentin Fallavier (Lyon)
Tél.: +33-4 74 82 15 15
Télécopie: +33-4 74 94 10 51

Germany
GRUNDFOS GMBH
Schlüterstr. 33
40699 Erkrath
Tel.: +49-(0) 211 929 69-0
Telefax: +49-(0) 211 929 69-3799
e-mail: infoservice@grundfos.de
Service in Deutschland:
e-mail: kundendienst@grundfos.de

Greece
GRUNDFOS Hellas A.E.B.E.
20th km. Athinon-Markopoulou Av.
P.O. Box 71
GR-19002 Peania
Phone: +0030-210-66 83 400
Telefax: +0030-210-66 46 273

Hong Kong
GRUNDFOS Pumps (Hong Kong) Ltd.
Unit 1, Ground floor
Siu Wai Industrial Centre
29-33 Wing Hong Street &
68 King Lam Street, Cheung Sha Wan
Kowloon
Phone: +852-27861706 / 27861741
Telefax: +852-27858664

Hungary
GRUNDFOS Hungária Kft.
Park u. 8
H-2045 Törökbálint,
Phone: +36-23 511 110
Telefax: +36-23 511 111

India
GRUNDFOS Pumps India Private Limited
118 Old Mahabalipuram Road
Thoraipakkam
Chennai 600 096
Phone: +91-44 2496 6800

Indonesia
PT. GRUNDFOS POMPA
Graha Intirub Lt. 2 & 3
Jln. Cililitan Besar No.454. Makasar,
Jakarta Timur
ID-Jakarta 13650
Phone: +62 21-469-51900
Telefax: +62 21-460 6910 / 460 6901

Ireland
GRUNDFOS (Ireland) Ltd.
Unit A, Merrywell Business Park
Ballymount Road Lower
Dublin 12
Phone: +353-1-4089 800
Telefax: +353-1-4089 830

Italy
GRUNDFOS Pompe Italia S.r.l.
Via Gran Sasso 4
I-20060 Truccazzano (Milano)
Tel.: +39-02-95838112
Telefax: +39-02-95309290 / 95838461

Japan
GRUNDFOS Pumps K.K.
Gotanda Metalion Bldg., 5F,
5-21-15, Higashi-gotanda
Shiagawa-ku, Tokyo
141-0022 Japan
Phone: +81 35 448 1391
Telefax: +81 35 448 9619

Korea
GRUNDFOS Pumps Korea Ltd.
6th Floor, Aju Building 679-5
Yeoksam-dong, Kangnam-ku, 135-916
Seoul, Korea
Phone: +82-2-5317 600
Telefax: +82-2-5633 725

Latvia
SIA GRUNDFOS Pumps Latvia
Deglava biznesa centrs
Augusta Deglava ielā 60, LV-1035, Rīga,
Tālr.: + 371 714 9640, 7 149 641
Fakss: + 371 914 9646

Lithuania
GRUNDFOS Pumps UAB
Smolensko g. 6
LT-03201 Vilnius
Tel: + 370 52 395 430
Fax: + 370 52 395 431

Malaysia
GRUNDFOS Pumps Sdn. Bhd.
7 Jalan Peguam U1/25
Glenmarie Industrial Park
40150 Shah Alam
Selangor
Phone: +60-3-5569 2922
Telefax: +60-3-5569 2866

Mexico
Bombas GRUNDFOS de México S.A. de C.V.
Boulevard TLC No. 15
Parque Industrial Stiva Aeropuerto
Apodaca, N.L. 66600
Phone: +52-81-8144 4000
Telefax: +52-81-8144 4010

Netherlands
GRUNDFOS Netherlands
Veluwezoom 35
1326 AE Almere
Postbus 22015
1302 CA ALMERE
Tel.: +31-88-478 6336
Telefax: +31-88-478 6332
E-mail: info_gnl@grundfos.com

New Zealand
GRUNDFOS Pumps NZ Ltd.
17 Beatrice Tinsley Crescent
North Harbour Industrial Estate
Albany, Auckland
Phone: +64-9-415 3240
Telefax: +64-9-415 3250

Norway
GRUNDFOS Pumper A/S
Strømsveien 344
Postboks 235, Leirdal
N-1011 Oslo
Tlf.: +47-22 90 47 00
Telefax: +47-22 32 21 50

Poland
GRUNDFOS Pompy Sp. z o.o.
ul. Klonowa 23
Baranowo k. Poznania
PL-62-081 Przeźmierowo
Tel: (+48-61) 650 13 00
Fax: (+48-61) 650 13 50

Portugal
Bombas GRUNDFOS Portugal, S.A.
Rua Calvet de Magalhães, 241
Apartado 1079
P-2770-153 Paço de Arcos
Tel.: +351-21-440 76 00
Telefax: +351-21-440 76 90

Romania
GRUNDFOS Pompe România SRL
Bd. Biruintei, nr 103
Pantelimon county Ilfov
Phone: +40 21 200 4100
Telefax: +40 21 200 4101
E-mail: romania@grundfos.ro

Russia
ООО Грундфос Россия
109544, г. Москва, ул. Школьная, 39-41, стр. 1
Тел. (+7) 495 564-88-00 (495) 737-30-00
Факс (+7) 495 564 88 11
E-mail grundfos.moscow@grundfos.com

Serbia
Grundfos Srbija d.o.o.
Omladinskih brigada 90b
11070 Novi Beograd
Phone: +381 11 2258 740
Telefax: +381 11 2281 769
www.rs.grundfos.com

Singapore
GRUNDFOS (Singapore) Pte. Ltd.
25 Jalan Tukang
Singapore 619264
Phone: +65-6681 9688
Telefax: +65-6681 9689

Slovakia
GRUNDFOS s.r.o.
Prievozská 4D
821 09 BRATISLAVA
Phona: +421 2 5020 1426
sk.grundfos.com

Slovenia
GRUNDFOS LJUBLJANA, d.o.o.
Leskoškova 9e, 1122 Ljubljana
Phone: +386 (0) 1 568 06 10
Telefax: +386 (0)1 568 06 19
E-mail: tehnika-si@grundfos.com

South Africa
GRUNDFOS (PTY) LTD
Corner Mountjoy and George Allen Roads
Wilbart Ext. 2
Bedfordview 2008
Phone: (+27) 11 579 4800
Fax: (+27) 11 455 6066
E-mail: lsmart@grundfos.com

Spain
Bombas GRUNDFOS Españ a S.A.
Camino de la Fuentecilla, s/n
E-28110 Algete (Madrid)
Tel.: +34-91-848 8800
Telefax: +34-91-628 0465

Sweden
GRUNDFOS AB
Box 333 (Lunnagårdsgatan 6)
431 24 Mölndal
Tel.: +46 31 332 23 000
Telefax: +46 31 331 94 60

Switzerland
GRUNDFOS Pumpen AG
Bruggacherstrasse 10
CH-8117 Fällanden/ZH
Tel.: +41-44-806 8111
Telefax: +41-44-806 8115

Taiwan
GRUNDFOS Pumps (Taiwan) Ltd.
7 Floor, 219 Min-Chuan Road
Taichung, Taiwan, R.O.C.
Phone: +886-4-2305 0868
Telefax: +886-4-2305 0878

Thailand
GRUNDFOS (Thailand) Ltd.
92 Chaloem Phrakiat Rama 9 Road,
Dokmai, Pravej, Bangkok 10250
Phone: +66-2-725 8999
Telefax: +66-2-725 8998

Turkey
GRUNDFOS POMPA San. ve Tic. Ltd. Sti.
Gebze Organize Sanayi Bölgesi
Ihsan dede Caddesi,
2. yol 200. Sokak No. 204
41490 Gebze/ Kocaeli
Phone: +90 - 262-679 7979
Telefax: +90 - 262-679 7905
E-mail: satis@grundfos.com

Ukraine
Бізнес Центр Європа
Столичне шосе, 103
м. Київ, 03131, Україна
Телефон: (+38 044) 237 04 00
Факс.: (+38 044) 237 04 01
E-mail: ukraine@grundfos.com

United Arab Emirates
GRUNDFOS Gulf Distribution
P.O. Box 16768
Jebel Ali Free Zone
Dubai
Phone: +971 4 8815 166
Telefax: +971 4 8815 136

United Kingdom
GRUNDFOS Pumps Ltd.
Grovebury Road
Leighton Buzzard/Beds. LU7 4TL
Phone: +44-1525-850000
Telefax: +44-1525-850011

U.S.A.
GRUNDFOS Pumps Corporation
17100 West 118th Terrace
Olathe, Kansas 66061
Phone: +1-913-227-3400
Telefax: +1-913-227-3500

Uzbekistan
Grundfos Tashkent, Uzbekistan The Representative Office of Grundfos Kazakhstan in Uzbekistan
38a, Oybek street, Tashkent
Телефон: (+998) 71 150 3290 / 71 150 3291
Факс: (+998) 71 150 3292

Addresses Revised 25.01.2016

© Copyright Grundfos Holding A/S

The name Grundfos, the Grundfos logo, and **be think innovate** are registered trademarks owned by Grundfos Holding A/S or Grundfos A/S, Denmark. All rights reserved worldwide.

98074911 0616
ECM: 1157986

FRANKLIN ELECTRIC

2011 AIM MANUAL

SUBMERSIBLE MOTORS

Application • Installation • Maintenance

60 Hz, Single-Phase and Three-Phase Motors

System Solutions

Franklin Electric

ATTENTION!
IMPORTANT INFORMATION FOR INSTALLERS OF THIS EQUIPMENT!

THIS EQUIPMENT IS INTENDED FOR INSTALLATION BY TECHNICALLY QUALIFIED PERSONNEL. FAILURE TO INSTALL IT IN COMPLIANCE WITH NATIONAL AND LOCAL ELECTRICAL CODES, AND WITHIN FRANKLIN ELECTRIC RECOMMENDATIONS, MAY RESULT IN ELECTRICAL SHOCK OR FIRE HAZARD, UNSATISFACTORY PERFORMANCE, AND EQUIPMENT FAILURE. FRANKLIN INSTALLATION INFORMATION IS AVAILABLE FROM PUMP MANUFACTURERS AND DISTRIBUTORS, AND DIRECTLY FROM FRANKLIN ELECTRIC. CALL FRANKLIN TOLL FREE 800-348-2420 FOR INFORMATION.

WARNING

SERIOUS OR FATAL ELECTRICAL SHOCK MAY RESULT FROM FAILURE TO CONNECT THE MOTOR, CONTROL ENCLOSURES, METAL PLUMBING, AND ALL OTHER METAL NEAR THE MOTOR OR CABLE, TO THE POWER SUPPLY GROUND TERMINAL USING WIRE NO SMALLER THAN MOTOR CABLE WIRES. TO REDUCE RISK OF ELECTRICAL SHOCK, DISCONNECT POWER BEFORE WORKING ON OR AROUND THE WATER SYSTEM. DO NOT USE MOTOR IN SWIMMING AREAS.

ATTENTION!
INFORMATIONS IMPORTANTES POUR L'INSTALLATEUR DE CET EQUIPEMENT.

CET EQUIPEMENT DOIT ETRE INTALLE PAR UN TECHNICIEN QUALIFIE. SI L'INSTALLATION N'EST PAS CONFORME AUX LOIS NATIONALES OU LOCALES AINSI QU'AUX RECOMMANDATIONS DE FRANKLIN ELECTRIC, UN CHOC ELECTRIQUE, LE FEU, UNE PERFORMANCE NON ACCEPTABLE, VOIRE MEME LE NON-FONCTIONNEMENT PEUVENT SURVENIR. UN GUIDE D'INSTALLATION DE FRANKLIN ELECTRIC EST DISPONIBLE CHEZ LES MANUFACTURIERS DE POMPES, LES DISTRIBUTEURS, OU DIRECTEMENT CHEZ FRANKLIN. POUR DE PLUS AMPLES RENSEIGNEMENTS, APPELEZ SANS FRAIS LE 800-348-2420.

AVERTISSEMENT

UN CHOC ELECTRIQUE SERIEUX OU MEME MORTEL EST POSSIBLE, SI L'ON NEGLIGE DE CONNECTER LE MOTEUR, LA PLOMBERIE METALLIQUE, BOITES DE CONTROLE ET TOUT METAL PROCHE DU MOTEUR A UN CABLE ALLANT VERS UNE ALIMENTATION D'ENERGIE AVEC BORNE DE MISE A LA TERRE UTILISANT AU MOINS LE MEME CALIBRE QUE LES FILS DU MOTEUR. POUR REDUIRE LE RISQUE DE CHOC ELECTRIQUE. COUPER LE COURANT AVANT DE TRAVAILLER PRES OU SUR LE SYSTEM D'EAU. NE PAS UTILISER CE MOTEUR DANS UNE ZONE DE BAIGNADE.

ATENCION!
INFORMACION PARA EL INSTALADOR DE ESTE EQUIPO.

PARA LA INSTALACION DE ESTE EQUIPO, SE REQUIERE DE PERSONAL TECNICO CALIFICADO. EL NO CUMPLIR CON LAS NORMAS ELECTRICAS NACIONALES Y LOCALES, ASI COMO CON LAS RECOMENDACIONES DE FRANKLIN ELECTRIC DURANTE SU INSTALACION, PUEDE OCASIONAR, UN CHOQUE ELECTRICO, PELIGRO DE UN INCENDIO, OPERACION DEFECTUOSA E INCLUSO LA DESCOMPOSTURA DEL EQUIPO. LOS MANUALES DE INSTALACION Y PUESTA EN MARCHA DE LOS EQUIPOS, ESTAN DISPONIBLES CON LOS DISTRIBUIDORES, FABRICANTES DE BOMBAS O DIRECTAMENTE CON FRANKLIN ELECTRIC. PUEDE LLAMAR GRATUITAMENTE PARA MAYOR INFORMACION AL TELEFONO 800-348-2420.

ADVERTENCIA

PUEDE OCURRIR UN CHOQUE ELECTRICO, SERIO O FATAL DEBIDO A UNA ERRONEA CONECCION DEL MOTOR, DE LOS TABLEROS ELECTRICOS, DE LA TUBERIA, DE CUALQUIER OTRA PARTE METALICA QUE ESTA CERCA DEL MOTOR O POR NO UTILIZAR UN CABLE PARA TIERRA DE CALIBRE IGUAL O MAYOR AL DE LA ALIMENTACION. PARA REDUCIR EL RIESGO DE CHOQUE ELECTRIC, DESCONECTAR LA ALIMENTACION ELECTRICA ANTES DE INICIAR A TRABAJAR EN EL SISTEMA HIDRAULICO. NO UTILIZAR ESTE MOTOR EN ALBERCAS O AREAS EN DONDE SE PRACTIQUE NATACION.

Commitment to Quality

Franklin Electric is committed to provide customers with defect free products through our program of continuous improvement. Quality shall, in every case, take precedence over quantity.

Franklin Electric

SUBMERSIBLE MOTORS

60 Hz, Single-Phase and Three-Phase

Application • Installation • Maintenance Manual

The submersible motor is a reliable, efficient and trouble-free means of powering a pump. Its needs for a long operational life are simple. They are:

1. A suitable operating environment
2. An adequate supply of electricity
3. An adequate flow of cooling water over the motor
4. An appropriate pump load

All considerations of application, installation, and maintenance of submersible motors relating to these four areas are presented in this manual. Franklin Electric's web page, www.franklin-electric.com, should be checked for the latest updates.

Contents

Application

All Motors

Storage 3
Frequency of Starts 3
Mounting Position 3
Transformer Capacity 4
Effects of Torque 4
Use of Engine Driven Generators 5
Use of Check Valves 5
Well Diameters, Casing, Top Feeding, Screens 6
Water Temperature and Flow 6
Flow Inducer Sleeve 6
Head Loss Past Motor 7
Hot Water Applications 7-8
Drawdown Seals 9
Grounding Control Boxes and Panels 9
Grounding Surge Arrestors 9
Control Box and Panel Environment 9
Equipment Grounding 9

Single-Phase Motors

3-Wire Control Boxes 10
2-Wire Motor Solid State Controls 10
QD Relays (Solid State) 10
Cable Selection 2-Wire or 3-Wire 11
Two Different Cable Sizes 12
Single-Phase Motor Specifications 13
Single-Phase Motor Fuse Sizing 14
Auxiliary Running Capacitors 15
Buck-Boost Transformers 15

Three-Phase Motors

Cable Selection - 60 °C Three-Wire 16-17
Cable Selection - 60 °C Six-Wire 18
Cable Selection - 75 °C Three-Wire 19-20
Cable Selection - 75 °C Six-Wire 21
Three-Phase Motor Specifications 22-28
Overload Protection 29-31
Submersible Pump Installation Checklist (No. 3656)
Submersible Motor Installation Record (No. 2207)
Submersible Booster Installation Record (No. 3655)
SubMonitor 32
Power Factor Correction 32
Three-Phase Starter Diagrams 33
Three-Phase Power Unbalance 34
Rotation and Current Unbalance 34
Three-Phase Motor Lead Identification 35
Phase Converters 35
Reduced Voltage Starters 36
Inline Booster Pump Systems 36-39
Variable Speed Operation 40-41

Installation

All Motors

Submersible Motors - Dimensions 42
Tightening Lead Connector Jam Nut 43
Pump to Motor Coupling 43
Pump to Motor Assembly 43
Shaft Height and Free End Play 43
Submersible Leads and Cables 43

Maintenance

All Motors

System Troubleshooting 44-45
Preliminary Tests 46
Insulation Resistance 47
Resistance of Drop Cable 47

Single-Phase Motors and Controls

Identification of Cables 48
Single-Phase Control Boxes 48
Ohmmeter Tests 49
QD Control Box Parts 50
Integral hp Control Box Parts 51-52
Control Box Wiring Diagrams 53-57

Electronic Products

Pumptec-Plus Troubleshooting During Installation 58
Pumptec-Plus Troubleshooting After Installation 59
QD Pumptec and Pumptec Troubleshooting 60
SubDrive/MonoDrive Troubleshooting 61-62
SubMonitor Troubleshooting 63
Subtrol-Plus Troubleshooting 64-65

Storage

Franklin Electric submersible motors are a water-lubricated design. The fill solution consists of a mixture of deionized water and Propylene Glycol (a non-toxic antifreeze). The solution will prevent damage from freezing in temperatures to -40 °F (-40 °C); motors should be stored in areas that do not go below this temperature. The solution will partially freeze below 27 °F (-3 °C), but no damage occurs. Repeated freezing and thawing should be avoided to prevent possible loss of fill solution.

There may be an interchange of fill solution with well water during operation. Care must be taken with motors removed from wells during freezing conditions to prevent damage.

When the storage temperature does not exceed 100 °F (37 °C), storage time should be limited to two years. Where temperatures reach 100° to 130 °F, storage time should be limited to one year.

Loss of a few drops of liquid will not damage the motor as an excess amount is provided, and the filter check valve will allow lost liquid to be replaced by filtered well water upon installation. If there is reason to believe there has been a considerable amount of leakage, consult the factory for checking procedures.

Frequency of Starts

The average number of starts per day over a period of months or years influences the life of a submersible pumping system. Excessive cycling affects the life of control components such as pressure switches, starters, relays and capacitors. Rapid cycling can also cause motor spline damage, bearing damage, and motor overheating. All these conditions can lead to reduced motor life.

The pump size, tank size and other controls should be selected to keep the starts per day as low as practical for longest life. The maximum number of starts per 24-hour period is shown in table 3.

Motors should run a minimum of one minute to dissipate heat build up from starting current. Six inch and larger motors should have a minimum of 15 minutes between starts or starting attempts.

Table 3 Number of Starts

MOTOR RATING		MAXIMUM STARTS PER 24 HR PERIOD	
HP	KW	SINGLE-PHASE	THREE-PHASE
Up to 0.75	Up to 0.55	300	300
1 thru 5.5	0.75 thru 4	100	300
7.5 thru 30	5.5 thru 22	50	100*
40 and over	30 and over	-	100

* Keeping starts per day within the recommended numbers provides the best system life. However, when used with a properly configured Reduced Voltage Starter (RVS) or Variable Frequency Drive (VFD), 7.5 thru 30 hp three-phase motors can be started up to 200 times per 24 hour period.

Mounting Position

Franklin submersible motors are designed primarily for operation in the vertical, shaft-up position.

During acceleration, the pump thrust increases as its output head increases. In cases where the pump head stays below its normal operating range during startup and full speed condition, the pump may create upward thrust. This creates upward thrust on the motor upthrust bearing. This is an acceptable operation for short periods at each start, but running continuously with upthrust will cause excessive wear on the upthrust bearing.

With certain additional restrictions as listed in this section and the Inline Booster Pump Systems sections of this manual, motors are also suitable for operation in positions from shaft-up to shaft-horizontal. As the mounting position becomes further from vertical and closer to horizontal, the probability of shortened thrust bearing life increases. For normal motor life expectancy with motor positions other than shaft-up, follow these recommendations:

1. Minimize the frequency of starts, preferably to fewer than **10** per 24-hour period. Six and eight inch motors should have a minimum of 20 minutes between starts or starting attempts
2. Do not use in systems which can run even for short periods at full speed without thrust toward the motor.

Transformer Capacity - Single-Phase or Three-Phase

Distribution transformers must be adequately sized to satisfy the kVA requirements of the submersible motor. When transformers are too small to supply the load, there is a reduction in voltage to the motor.

Table 4 references the motor horsepower rating, single-phase and three-phase, total effective kVA required, and the smallest transformer required for open or closed three-phase systems. Open systems require larger transformers since only two transformers are used.

Other loads would add directly to the kVA sizing requirements of the transformer bank.

Table 4 Transformer Capacity

MOTOR RATING		TOTAL EFFECTIVE KVA REQUIRED	SMALLEST KVA RATING-EACH TRANSFORMER	
HP	KW		OPEN WYE OR DELTA 2- TRANSFORMERS	CLOSED WYE OR DELTA 3- TRANSFORMERS
1.5	1.1	3	2	1
2	1.5	4	2	1.5
3	2.2	5	3	2
5	3.7	7.5	5	3
7.5	5.5	10	7.5	5
10	7.5	15	10	5
15	11	20	15	7.5
20	15	25	15	10
25	18.5	30	20	10
30	22	40	25	15
40	30	50	30	20
50	37	60	35	20
60	45	75	40	25
75	55	90	50	30
100	75	120	65	40
125	93	150	85	50
150	110	175	100	60
175	130	200	115	70
200	150	230	130	75

NOTE: Standard kVA ratings are shown. If power company experience and practice allows transformer loading higher than standard, higher loading values may be used to meet total effective kVA required, provided correct voltage and balance is maintained.

Effects of Torque

During starting of a submersible pump, the torque developed by the motor must be supported through the pump, delivery pipe or other supports. Most pumps rotate in the direction which causes unscrewing torque on right-handed threaded pipe or pump stages. All threaded joints, pumps and other parts of the pump support system must be capable of withstanding the maximum torque repeatedly without loosening or breaking. Unscrewing joints will break electrical cable and may cause loss of the pump-motor unit.

To safely withstand maximum unscrewing torques with a minimum safety factor of 1.5, tightening all threaded joints to at least 10 lb-ft per motor horsepower is recommended (table 4A). It may be necessary to tack or strap weld pipe joints on high horsepower pumps, especially at shallower settings.

Table 4A Torque Required (Examples)

MOTOR RATING		MINIMUM SAFE TORQUE-LOAD
HP	KW	
1 hp & Less	0.75 kW & Less	10 lb-ft
20 hp	15 kW	200 lb-ft
75 hp	55 kW	750 lb-ft
200 hp	150 kW	2000 lb-ft

Use of Engine Driven Generators - Single-Phase or Three-Phase

Table 5 lists minimum generator sizes based on typical 80 °C rise continuous duty generators, with 35% maximum voltage dip during starting, for Franklin's three-wire motors, single- or three-phase.

This is a general chart. The generator manufacturer should be consulted whenever possible, especially on larger sizes.

There are two types of generators available: externally and internally regulated. Most are externally regulated. They use an external voltage regulator that senses the output voltage. As the voltage dips at motor start-up, the regulator increases the output voltage of the generator.

Internally regulated (self-excited) generators have an extra winding in the generator stator. The extra winding senses the output current to automatically adjust the output voltage.

Generators must be sized to deliver at least 65% of the rated voltage during starting to ensure adequate starting torque. Besides sizing, generator frequency is important as the motor speed varies with the frequency (Hz). Due to pump affinity laws, a pump running at 1 to 2 Hz below motor nameplate frequency design will not meet its performance curve. Conversely, a pump running at 1 to 2 Hz above may trip overloads.

Generator Operation

Always start the generator before the motor is started and always stop the motor before the generator is shut down. The motor thrust bearing may be damaged if the generator is allowed to coast down with the motor running. This same condition occurs when the generator is allowed to run out of fuel.

Follow generator manufacturer's recommendations for de-rating at higher elevations or using natural gas.

Table 5 Engine Driven Generators

NOTE: This chart applies to 3-wire or 3-phase motors. For best starting of 2-wire motors, the minimum generator rating is 50% higher than shown.

MOTOR RATING		MINIMUM RATING OF GENERATOR			
		EXTERNALLY REGULATED		INTERNALLY REGULATED	
HP	KW	KW	KVA	KW	KVA
1/3	0.25	1.5	1.9	1.2	1.5
1/2	0.37	2	2.5	1.5	1.9
3/4	0.55	3	3.8	2	2.5
1	0.75	4	5.0	2.5	3.13
1.5	1.1	5	6.25	3	3.8
2	1.5	7.5	9.4	4	5
3	2.2	10	12.5	5	6.25
5	3.7	15	18.75	7.5	9.4
7.5	5.5	20	25.0	10	12.5
10	7.5	30	37.5	15	18.75
15	11	40	50	20	25
20	15	60	75	25	31
25	18.5	75	94	30	37.50
30	22	100	125	40	50
40	30	100	125	50	62.5
50	37	150	188	60	75
60	45	175	220	75	94
75	55	250	313	100	125
100	75	300	375	150	188
125	93	375	469	175	219
150	110	450	563	200	250
175	130	525	656	250	313
200	150	600	750	275	344

WARNING: To prevent accidental electrocution, automatic or manual transfer switches must be used any time a generator is used as standby or back up on power lines. Contact power company for use and approval.

Use of Check Valves

It is recommended that one or more check valves always be used in submersible pump installations. If the pump does not have a built-in check valve, a line check valve should be installed in the discharge line within 25 feet of the pump and below the draw down level of the water supply. For deeper settings, check valves should be installed per the manufacturer's recommendations. More than one check valve may be required, but more than the recommended number of check valves should not be used.

Swing type check valves are **not** acceptable and should never be used with submersible motors/pumps. Swing type check valves have a slower reaction time which can cause water hammer (see next page). Internal pump check valves or spring loaded check valves close quickly and help eliminate water hammer.

Check valves are used to hold pressure in the system when the pump stops. They also prevent backspin, water hammer and upthrust. Any of these can lead to early pump or motor failure.

NOTE: Only positive sealing check valves should be used in submersible installations. Although drilling the check valves or using drain-back check valves may prevent back spinning, they create upthrust and water hammer problems.

A. Backspin - With no check valve or a failed check valve, the water in the drop pipe and the water in the system can flow down the discharge pipe when the motor stops. This can cause the pump to rotate in a reverse direction. If the motor is started while it is backspinning, an excessive force is placed across the pump-motor assembly that can cause impeller damage, motor or pump shaft breakage, excessive bearing wear, etc.

B. Upthrust - With no check valve, a leaking check valve, or drilled check valve, the unit starts under

a zero head condition. This causes an uplifting or upthrust on the impeller-shaft assembly in the pump. This upward movement carries across the pump-motor coupling and creates an upthrust condition in the motor. Repeated upthrust can cause premature failure of both the pump and the motor.

C. **Water Hammer -** If the lowest check valve is more than 30 feet above the standing (lowest static) water level, or a lower check valve leaks and the check valve above holds, a vacuum is created in the discharge piping. On the next pump start, water moving at very high velocity fills the void and strikes the closed check valve and the stationary water in the pipe above it, causing a hydraulic shock. This shock can split pipes, break joints and damage the pump and/or motor. Water hammer can often be heard or felt. When discovered, the system should be shut down and the pump installer contacted to correct the problem.

Wells – Large Diameter, Uncased, Top Feeding and Screened Sections

Franklin Electric submersible motors are designed to operate with a cooling flow of water over and around the full length of the motor.

If the pump installation does not provide the minimum flow shown in table 6, a flow inducer sleeve (flow sleeve) must be used. The conditions requiring a flow sleeve are:

- Well diameter is too large to meet table 6 flow requirements.
- Pump is in an open body of water.
- Pump is in a rock well or below the well casing.
- The well is “top-feeding” (a.k.a. cascading)
- Pump is set in or below screens or perforations.

Water Temperature and Flow

Franklin Electric’s standard submersible motors, except Hi-Temp designs (see note below), are designed to operate up to maximum service factor horsepower in water up to 86 °F (30 °C). A flow of 0.25 ft/s for 4" motors rated 3 hp and higher, and 0.5 ft/s for 6" and 8" motors is required for proper cooling. Table 6 shows minimum flow rates, in gpm, for various well diameters and motor sizes.

If a standard motor is operated in water over 86 °F (30 °C), water flow past the motor must be increased to maintain safe motor operating temperatures. See HOT WATER APPLICATIONS on page 7.

NOTE: Franklin Electric offers a line of Hi-Temp motors designed to operate in water at higher temperatures or lower flow conditions. Consult factory for details.

Table 6 Required Cooling Flow

MINIMUM GPM REQUIRED FOR MOTOR COOLING IN WATER UP TO 86 °F (30 °C).			
CASING OR SLEEVE ID INCHES (MM)	4" MOTOR (3-10 HP) 0.25 FT/S GPM (L/M)	6" MOTOR 0.50 FT/S GPM (L/M)	8" MOTOR 0.50 FT/S GPM (L/M)
4 (102)	1.2 (4.5)	-	-
5 (127)	7 (26.5)	-	-
6 (152)	13 (49)	9 (34)	-
7 (178)	20 (76)	25 (95)	-
8 (203)	30 (114)	45 (170)	10 (40)
10 (254)	50 (189)	90 (340)	55 (210)
12 (305)	80 (303)	140 (530)	110 (420)
14 (356)	110 (416)	200 (760)	170 (645)
16 (406)	150 (568)	280 (1060)	245 (930)

0.25 ft/s = 7.62 cm/sec 0.50 ft/s = 15.24 cm/sec
1 inch = 2.54 cm

Flow Inducer Sleeve

If the flow rate is less than specified, then a flow inducer sleeve must be used. A flow sleeve is always required in an open body of water. FIG. 1 shows a typical flow inducer sleeve construction.

EXAMPLE: A 6" motor and pump that delivers 60 gpm will be installed in a 10" well.

From table 6, 90 gpm would be required to maintain proper cooling. In this case adding an 8" or smaller flow sleeve provides the required cooling.

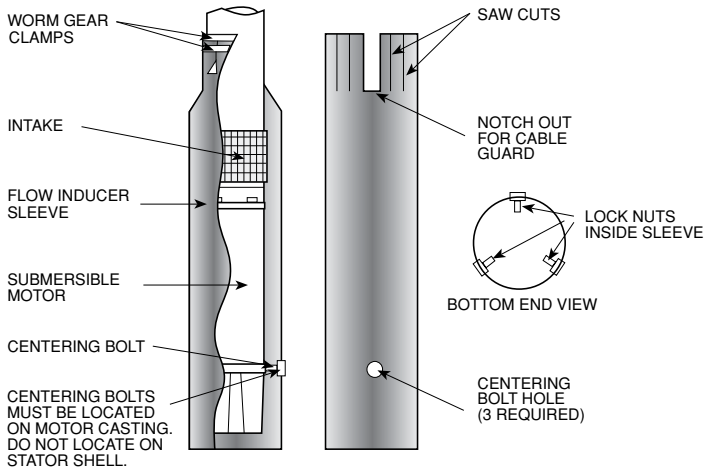

FIG. 1

Head Loss From Flow Past Motor

Table 7 lists the approximate head loss due to flow between an average length motor and smooth casing or flow inducer sleeve.

Table 7 Head Loss in Feet (Meters) at Various Flow Rates

MOTOR DIAMETER		4"	4"	4"	6"	6"	6"	8"	8"
CASING ID IN INCHES (MM)		4 (102)	5 (127)	6 (152)	6 (152)	7 (178)	8 (203)	8.1 (206)	10 (254)
Flow Rate in gpm (l/m)	25 (95)	0.3 (.09)							
	50 (189)	1.2 (.37)							
	100 (378)	4.7 (1.4)	0.3 (.09)		1.7 (.52)				
	150 (568)	10.2 (3.1)	0.6 (.18)	0.2 (.06)	3.7 (1.1)				
	200 (757)		1.1 (.34)	0.4 (.12)	6.3 (1.9)	0.5 (.15)		6.8 (2.1)	
	250 (946)		1.8 (.55)	0.7 (.21)	9.6 (2.9)	0.8 (.24)		10.4 (3.2)	
	300 (1136)		2.5 (.75)	1.0 (.30)	13.6 (4.1)	1.2 (.37)	0.2 (.06)	14.6 (4.5)	
	400 (1514)				23.7 (7.2)	2.0 (.61)	0.4 (.12)	24.6 (7.5)	
	500 (1893)					3.1 (.94)	0.7 (.21)	37.3 (11.4)	0.6 (0.2)
	600 (2271)					4.4 (1.3)	1.0 (.30)	52.2 (15.9)	0.8 (0.3)
	800 (3028)								1.5 (0.5)
	1000 (3785)								2.4 (0.7)

Hot Water Applications (Standard Motors)

Franklin Electric offers a line of Hi-Temp motors which are designed to operate in water with various temperatures up to 194 °F (90 °C) without increased flow. When a standard pump-motor operates in water hotter than 86 °F (30 °C), a flow rate of at least 3 ft/s is required. When selecting the motor to drive a pump in over 86 °F (30 °C) water, the motor horsepower must be de-rated per the following procedure.

1. Using table 7A, determine pump gpm required for different well or sleeve diameters. If necessary, add a flow sleeve to obtain at least 3 ft/s flow rate.

Table 7A Minimum gpm (l/m) Required for 3 ft/s (.91 m/sec) Flow Rate

CASING OR SLEEVE ID		4" HIGH THRUST MOTOR		6" MOTOR		8" MOTOR	
INCHES	(MM)	GPM	(L/M)	GPM	(L/M)	GPM	(L/M)
4	(102)	15	(57)				
5	(127)	80	(303)				
6	(152)	160	(606)	52	(197)		
7	(178)			150	(568)		
8	(203)			260	(984)	60	(227)
10	(254)			520	(1970)	330	(1250)
12	(305)					650	(2460)
14	(356)					1020	(3860)
16	(406)					1460	(5530)

Continued on next page

2. Determine pump horsepower required from the pump manufacturer's curve.

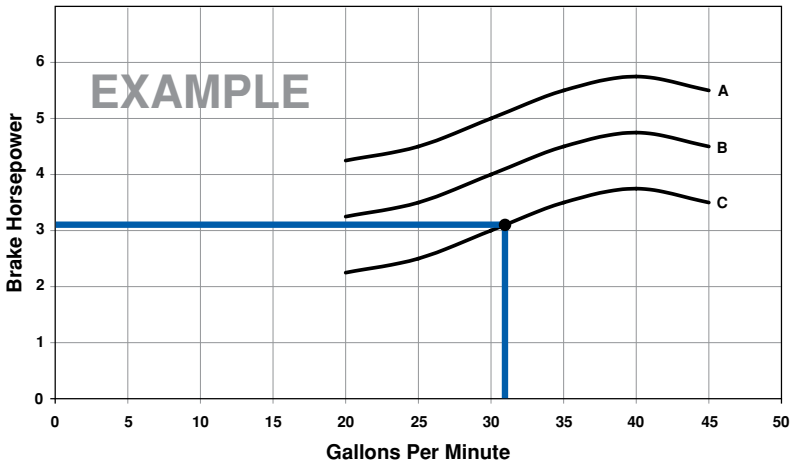

FIG. 2 MANUFACTURER'S PUMP CURVE

3. Multiply the pump horsepower required by the heat factor multiplier from table 8.

Table 8 Heat Factor Multiplier at 3 ft/s (.91 m/sec) Flow Rate

MAXIMUM WATER TEMPERATURE	1/3 - 5 HP .25 - 3.7 KW	7 1/2 - 30 HP 5.5 - 22 KW	OVER 30 HP OVER 22 KW
140 °F (60 °C)	1.25	1.62	2.00
131 °F (55 °C)	1.11	1.32	1.62
122 °F (50 °C)	1.00	1.14	1.32
113 °F (45 °C)	1.00	1.00	1.14
104 °F (40 °C)	1.00	1.00	1.00
95 °F (35 °C)	1.00	1.00	1.00

4. Select a rated hp motor on table 8A whose Service Factor Horsepower is at least the value calculated in Item 3.

Table 8A Service Factor Horsepower

HP	KW	SFHP	HP	KW	SFHP	HP	KW	SFHP	HP	KW	SFHP
1/3	0.25	0.58	3	2.2	3.45	25	18.5	28.75	100	75	115.00
1/2	0.37	0.80	5	3.7	5.75	30	22.0	34.50	125	93	143.75
3/4	0.55	1.12	7.5	5.5	8.62	40	30.0	46.00	150	110	172.50
1	0.75	1.40	10	7.5	11.50	50	37.0	57.50	175	130	201.25
1.5	1.10	1.95	15	11.0	17.25	60	45.0	69.00	200	150	230.00
2	1.50	2.50	20	15.0	23.00	75	55.0	86.25			

Hot Water Applications - Example

EXAMPLE: A 6" pump end requiring 39 hp input will pump 124 °F water in an 8" well at a delivery rate of 140 gpm. From table 7A, a 6" flow sleeve will be required to increase the flow rate to at least 3 ft/s.

Using table 8, the 1.62 heat factor multiplier is selected because the hp required is over 30 hp and water temperature is above 122 °F. Multiply 39 hp x 1.62 (multiplier), which equals 63.2 hp. This is the minimum rated service factor horsepower usable at 39 hp in 124 °F. Using table 8A, select a motor with a rated service factor horsepower above 63.2 hp. A 60 hp motor has a service factor horsepower of 69, so a 60 hp motor may be used.

Drawdown Seals

Allowable motor temperature is based on atmospheric pressure or higher surrounding the motor. “Drawdown seals,” which seal the well to the pump above its intake to maximize delivery, are not recommended, since the suction created can be lower than atmospheric pressure.

Grounding Control Boxes and Panels

The National Electrical Code requires that the control box or panel-grounding terminal always be connected to supply ground. If the circuit has no grounding conductor and no metal conduit from the box to supply panel, use a wire at least as large as line conductors and connect as required by the National Electrical Code, from the grounding terminal to the electrical supply ground.

WARNING: Failure to ground the control frame can result in a serious or fatal electrical shock hazard.

Grounding Surge Arrestors

An above ground surge arrestor must be grounded, metal to metal, all the way to the lowest draw down water strata for the surge arrestor to be effective. GROUNDING THE ARRESTOR TO THE SUPPLY GROUND OR TO A DRIVEN GROUND ROD PROVIDES LITTLE OR NO SURGE PROTECTION FOR THE MOTOR.

Control Box, Pumptec Products and Panel Environment

Franklin Electric control boxes, Pumptec products and three-phase panels meet UL requirements for NEMA Type 3R enclosures. They are suitable for indoor and outdoor applications within temperatures of +14 °F (-10 °C) to 122 °F (50 °C). Operating control boxes below +14 °F can cause reduced starting torque and loss of overload protection when overloads are located in control boxes.

Control boxes, Pumptec products and three-phase panels should never be mounted in direct sunlight or high temperature locations. This will cause shortened capacitor life (where applicable) and unnecessary tripping of overload protectors. A ventilated enclosure painted white to reflect heat is recommended for an outdoor, high temperature location.

A damp well pit, or other humid location, accelerates component failure from corrosion.

Control boxes with voltage relays are designed for vertical upright mounting only. Mounting in other positions will affect the operation of the relay.

Equipment Grounding

WARNING: Serious or fatal electrical shock may result from failure to connect the motor, control enclosures, metal plumbing and all other metal near the motor or cable to the power supply ground terminal using wire no smaller than motor cable wires.

The primary purpose of grounding the metal drop pipe and/or metal well casing in an installation is safety. It is done to limit the voltage between nonelectrical (exposed metal) parts of the system and ground, thus minimizing dangerous shock hazards. Using wire at least the size of the motor cable wires provides adequate current-carrying capability for any ground fault that might occur. It also provides a low resistance path to ground, ensuring that the current to ground will be large enough to trip any overcurrent device designed to detect faults (such as a ground fault circuit interrupter, or GFCI).

Normally, the ground wire to the motor would provide the primary path back to the power supply ground for any ground fault. There are conditions, however, where the ground wire connection could become compromised. One such example would be the case where the water in the well is abnormally corrosive or aggressive. In this example, a grounded metal drop pipe or casing would then become the primary path to ground. However, the many installations that now use plastic drop pipes and/or casings require further steps to be taken for safety purposes, so that the water column itself does not become the conductive path to ground.

When an installation has abnormally corrosive water AND the drop pipe or casing is plastic, Franklin Electric recommends the use of a GFCI with a 10 mA set-point. In this case, the motor ground wire should be routed through the current-sensing device along with the motor power leads. Wired this way, the GFCI will trip only when a ground fault has occurred AND the motor ground wire is no longer functional.

3-Wire Control Boxes

Single-phase three-wire submersible motors require the use of control boxes. Operation of motors without control boxes or with incorrect boxes can result in motor failure and voids warranty.

Control boxes contain starting capacitors, a starting relay, and, in some sizes, overload protectors, running capacitors and contactors.

Ratings through 1 hp may use either a Franklin Electric solid state QD or a potential (voltage) type starting relay, while larger ratings use potential relays.

Potential (Voltage) Relays

Potential relays have normally closed contacts. When power is applied, both start and main motor windings are energized, and the motor starts. At this instant, the voltage across the start winding is relatively low and not enough to open the contacts of the relay.

As the motor accelerates, the increasing voltage across the start winding (and the relay coil) opens the relay contacts. This opens the starting circuit and the motor continues to run on the main winding alone, or the main plus run capacitor circuit. After the motor is started the relay contacts remain open.

CAUTION: The control box and motor are two pieces of one assembly. Be certain that the control box and motor hp and voltage match. Since a motor is designed to operate with a control box from the same manufacturer, we can promise warranty coverage only when a Franklin control box is used with a Franklin motor.

2-Wire Motor Solid State Controls

BIAC Switch Operation

When power is applied the bi-metal switch contacts are closed, so the triac is conducting and energizes the start winding. As rpm increases, the voltage in the sensor coil generates heat in the bi-metal strip, causing the bi-metal strip to bend and open the switch circuit. This removes the starting winding and the motor continues to run on the main winding alone.

Approximately 5 seconds after power is removed from the motor, the bi-metal strip cools sufficiently to return to its closed position and the motor is ready for the next start cycle.

Rapid Cycling

The BIAC starting switch will reset within approximately 5 seconds after the motor is stopped. If an attempt is made to restart the motor before the starting switch has reset, the motor may not start; however, there will be current in the main winding until the overload protector interrupts the circuit. The time for the protector to reset is longer than the reset of the starting switch. Therefore, the start switch will have closed and the motor will operate.

CAUTION: Restarting the motor within 5 seconds after power is removed may cause the motor overload to trip.

A waterlogged tank will cause fast cycling. When a waterlogged condition does occur, the user will be alerted to the problem during the off time (overload reset time) since the pressure will drop drastically. When the waterlogged tank condition is detected, the condition should be corrected to prevent nuisance tripping of the overload protector.

Bound Pump (Sandlocked)

When the motor is not free to turn, as with a sandlocked pump, the BIAC switch creates a “reverse impact torque” in the motor in either direction. When the sand is dislodged, the motor will start and operate in the correct direction.

QD Relays (Solid State)

There are two elements in the relay: a reed switch and a triac. The reed switch consists of two tiny rectangular blade-type contacts, which bend under magnetic flux. It is hermetically sealed in glass and is located within a coil, which conducts line current. When power is supplied to the control box, the main winding current passing through the coil immediately closes the reed switch contacts. This turns on the triac, which supplies voltage to the start winding, thus starting the motor.

Once the motor is started, the operation of the QD relay is an interaction between the triac, the reed switch and the motor windings. The solid state switch senses motor speed through the changing phase relationship between start winding current and line current. As the motor approaches running speed, the phase angle between the start current and the line current becomes nearly in phase. At this point, the reed switch contacts open, turning off the triac. This removes voltage from the start winding and the motor continues to run on the main winding only. With the reed switch contacts open and the triac turned off, the QD relay is ready for the next starting cycle.

2- or 3-Wire Cable, 60 Hz (Service Entrance to Motor - Maximum Length In Feet)

Table 11

60 °C

MOTOR RATING			60 °C INSULATION - AWG COPPER WIRE SIZE												
VOLTS	HP	KW	14	12	10	8	6	4	3	2	1	0	00	000	0000
115	1/2	.37	100	160	250	390	620	960	1190	1460	1780	2160	2630	3140	3770
230	1/2	.37	400	650	1020	1610	2510	3880	4810	5880	7170	8720			
	3/4	.55	300	480	760	1200	1870	2890	3580	4370	5330	6470	7870		
	1	.75	250	400	630	990	1540	2380	2960	3610	4410	5360	6520		
	1.5	1.1	190	310	480	770	1200	1870	2320	2850	3500	4280	5240		
	2	1.5	150	250	390	620	970	1530	1910	2360	2930	3620	4480		
	3	2.2	**120**	190	300	470	750	1190	1490	1850	2320	2890	3610		
	5	3.7	0	0	**180**	280	450	710	890	1110	1390	1740	2170	2680	
	7.5	5.5	0	0	0	**200**	310	490	610	750	930	1140	1410	1720	
	10	7.5	0	0	0	0	**250**	390	490	600	750	930	1160	1430	1760
	15	11	0	0	0	0	**170**	**270**	340	430	530	660	820	1020	1260

Table 11A

75 °C

MOTOR RATING			75 °C INSULATION - AWG COPPER WIRE SIZE												
VOLTS	HP	KW	14	12	10	8	6	4	3	2	1	0	00	000	0000
115	1/2	.37	100	160	250	390	620	960	1190	1460	1780	2160	2630	3140	3770
230	1/2	.37	400	650	1020	1610	2510	3880	4810	5880	7170	8720			
	3/4	.55	300	480	760	1200	1870	2890	3580	4370	5330	6470	7870	9380	
	1	.75	250	400	630	990	1540	2380	2960	3610	4410	5360	6520	7780	9350
	1.5	1.1	190	310	480	770	1200	1870	2320	2850	3500	4280	5240	6300	7620
	2	1.5	150	250	390	620	970	1530	1910	2360	2930	3620	4480	5470	6700
	3	2.2	**120**	190	300	470	750	1190	1490	1850	2320	2890	3610	4470	5550
	5	3.7	0	**110**	180	280	450	710	890	1110	1390	1740	2170	2680	3330
	7.5	5.5	0	0	**120**	200	310	490	610	750	930	1140	1410	1720	2100
	10	7.5	0	0	0	**160**	250	390	490	600	750	930	1160	1430	1760
	15	11	0	0	0	0	**170**	270	340	430	530	660	820	1020	1260

1 Foot = .3048 Meter

Lengths in **BOLD** only meet the US National Electrical Code ampacity requirements for individual conductors 60 °C or 75 °C in free air or water, not in magnetic enclosures, conduit or direct buried.

Lengths NOT in bold meet the NEC ampacity requirements for either individual conductors or jacketed 60 °C or 75 °C cable and can be in conduit or direct buried. Flat molded and web/ribbon cable are considered jacketed cable.

If any other cable is used, the NEC and local codes should be observed.

Cable lengths in tables 11 & 11A allow for a 5% voltage drop running at maximum nameplate amperes. If 3% voltage drop is desired, multiply table 11 and 11A lengths by 0.6 to get maximum cable length.

The portion of the total cable length, which is between the supply and single-phase control box with a line contactor, should not exceed 25% of total maximum allowable to ensure reliable contactor operation. Single-phase control boxes without line contactors may be connected at any point in the total cable length.

Tables 11 & 11A are based on copper wire. If aluminum wire is used, it must be two sizes larger than copper wire and oxidation inhibitors must be used on connections.

EXAMPLE: If tables 11 & 11A call for #12 copper wire, #10 aluminum wire would be required.

Contact Franklin Electric for 90 °C cable lengths. See pages 15, 49, and 50 for applications using 230 V motors on 208 V power systems.

Two or More Different Cable Sizes Can Be Used

Depending on the installation, any number of combinations of cable may be used.

For example, in a replacement/upgrade installation, the well already has 160 feet of buried #10 cable between the service entrance and the wellhead. A new 3 hp, 230-volt, single-phase motor is being installed to replace a smaller motor. The question is: Since there is already 160 feet of #10 AWG installed, what size cable is required in the well with a 3 hp, 230-volt, single-phase motor setting at 310 feet?

From tables 11 & 11A, a 3 hp motor can use up to 300 feet of #10 AWG cable.

The application has 160 feet of #10 AWG copper wire installed.

Using the formula below, 160 feet (actual) ÷ 300 feet (max allowable) is equal to 0.533. This means 53.3% (0.533 x 100) of the allowable voltage drop or loss, which is allowed between the service entrance and the motor, occurs in this wire. This leaves us 46.7% (1.00 - 0.533 = 0.467) of some other wire size to use in the remaining 310 feet “down hole” wire run.

The table shows #8 AWG copper wire is good for 470 feet. Using the formula again, 310 feet (used) ÷ 470 feet (allowed) = 0.660; adding this to the 0.533 determined earlier; 0.533 + 0.660 = 1.193. This combination is greater than 1.00, so the voltage drop will not meet US National Electrical Code recommendations.

Tables 11 & 11A show #6 AWG copper wire is good for 750 feet. Using the formula, 310 ÷ 750 = 0.413, and using these numbers, 0.533 + 0.413 = 0.946, we find this is less than 1.00 and will meet the NEC recommended voltage drop.

This works for two, three or more combinations of wire and it does not matter which size wire comes first in the installation.

$$\text{Formula: } \frac{\text{Actual Length}}{\text{Max Allowed}} + \frac{\text{Actual Length}}{\text{Max Allowed}} = 1.00$$

EXAMPLE: 3 hp, 230-Volt, Single-Phase Motor

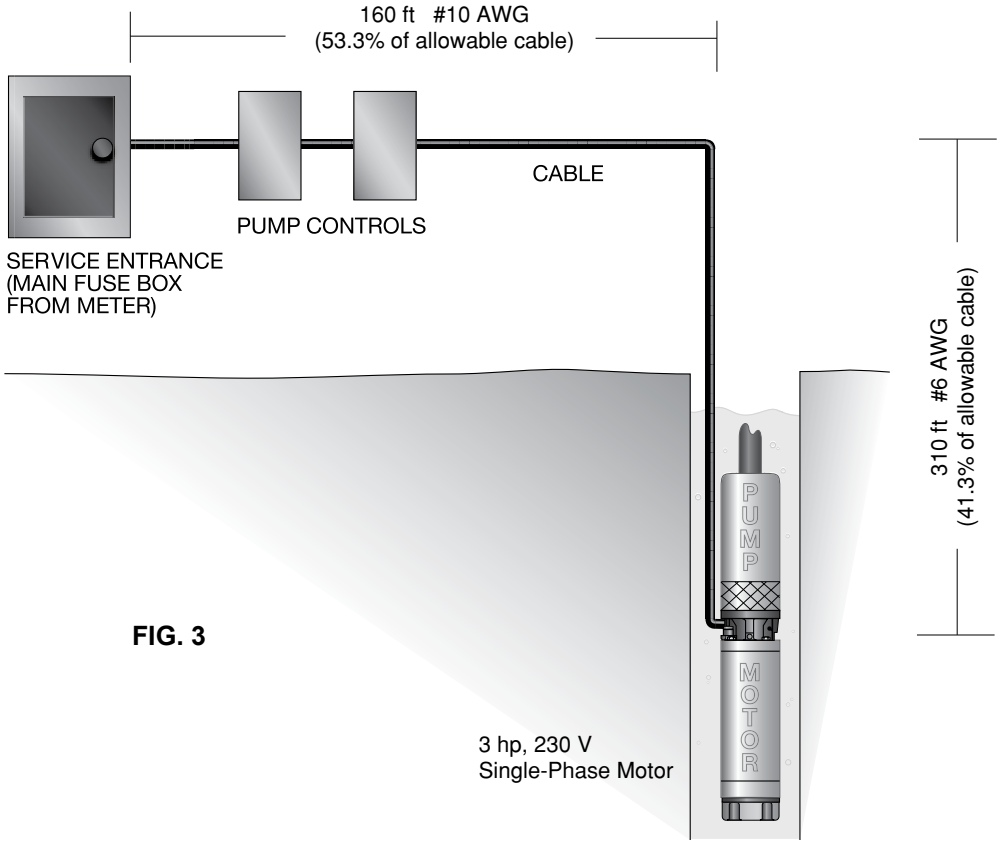

FIG. 3

Table 13 Single-Phase Motor Specifications (60 Hz) 3450 rpm

TYPE	MOTOR MODEL PREFIX	RATING					FULL LOAD		MAXIMUM LOAD		WINDING (1) RES. IN OHMS	EFFICIENCY %		POWER FACTOR %		LOCKED ROTOR AMPS	KVA CODE
		HP	KW	VOLTS	HZ	S.F.	(2) AMPS	WATTS	(2) AMPS	WATTS	M=MAIN RES. S=START RES.	S.F.	F.L.	S.F.	F.L.		
4" 2-WIRE	244504	1/2	0.37	115	60	1.6	10.0	670	12.0	960	1.0-1.3	62	56	73	58	64.4	R
	244505	1/2	0.37	230	60	1.6	5.0	670	6.0	960	4.2-5.2	62	56	73	58	32.2	R
	244507	3/4	0.55	230	60	1.5	6.8	940	8.0	1310	3.0-3.6	64	59	74	62	40.7	N
	244508	1	0.75	230	60	1.4	8.2	1210	10.4	1600	2.2-2.7	65	62	74	63	48.7	N
	244309	1.5	1.1	230	60	1.3	10.6	1770	13.1	2280	1.5-2.1	64	63	83	76	66.2	M
4" 3-WIRE	214504	1/2	0.37	115	60	1.6	Y10.0 B10.0 R0	670	Y12.0 B12.0 R0	960	M1.0-1.3 S4.1-5.1	62	56	73	58	50.5	M
	214505	1/2	0.37	230	60	1.6	Y5.0 B5.0 R0	670	Y6.0 B6.0 R0	960	M4.2-5.2 S16.7-20.5	62	56	73	58	23	M
	214507	3/4	0.55	230	60	1.5	Y6.8 B6.8 R0	940	Y8.0 B8.0 R0	1310	M3.0-3.6 S10.7-13.1	64	59	74	62	34.2	M
	214508	1	0.75	230	60	1.4	Y8.2 B8.2 R0	1210	10.4 10.4 R0	1600	M2.2-2.7 S9.9-12.1	65	62	74	63	41.8	L
4" 3-WIRE W/CRC CB	214505	1/2	0.37	230	60	1.6	Y3.6 B3.7 R2.0	655	Y4.3 B4.0 R2.0	890	M4.2-5.2 S16.7-20.5	67	57	90	81	23	M
	214507	3/4	0.55	230	60	1.5	Y4.9 B5.0 R3.2	925	Y5.7 B5.2 R3.1	1220	M3.0-3.6 S10.7-13.1	69	60	92	84	34.2	M
	214508	1	0.75	230	60	1.4	Y6.0 B5.7 R3.4	1160	Y7.1 B6.2 R3.3	1490	M2.2-2.7 S9.9-12.1	70	64	92	86	41.8	L
4" 3-WIRE	214508 W/1-1.5 CB	1	0.75	230	60	1.4	Y6.6 B6.6 R1.3	1130	Y8.0 B7.9 R1.3	1500	M2.2-2.7 S9.9-12.1	70	66	82	72	43	L
	224300	1.5	1.1	230	60	1.3	Y10.0 B9.9 R1.3	1620	Y11.5 B11.0 R1.3	2080	M1.7-2.1 S7.5-9.2	70	69	85	79	51.4	J
	224301	2	1.5	230	60	1.25	Y10.0 B9.3 R2.6	2025	Y13.2 B11.9 R2.6	2555	M1.8-2.3 S5.5-7.2	73	74	95	94	53.1	G
	224302 (3)	3	2.2	230	60	1.15	Y14.0 B11.2 R6.1	3000	Y17.0 B12.6 R6.0	3400	M1.1-1.4 S4.0-4.8	75	75	99	99	83.4	H
	224303 (4)	5	3.7	230	60	1.15	Y23.0 B15.9 R11.0	4830	Y27.5 B19.1 R10.8	5500	M.71-.82 S1.8-2.2	78	77	100	100	129	G
6"	226110 (5)	5	3.7	230	60	1.15	Y23.0 B14.3 R10.8	4910	Y27.5 B17.4 R10.5	5570	M.55-.68 S1.3-1.7	77	76	100	99	99	E
	226111	7.5	5.5	230	60	1.15	Y36.5 B34.4 R5.5	7300	Y42.1 B40.5 R5.4	8800	M.36-.50 S.88-1.1	73	74	91	90	165	F
	226112	10	7.5	230	60	1.15	Y44.0 B39.5 R9.3	9800	Y51.0 B47.5 R8.9	11300	M.27-.33 S.80-.99	76	77	96	96	204	E
	226113	15	11	230	60	1.15	Y62.0 B52.0 R17.5	13900	Y75.0 B62.5 R16.9	16200	M.17-.22 S.68-.93	79	80	97	98	303	E

(1) Main winding - yellow to black
Start winding - yellow to red

(2) Y = Yellow lead - line amps
B = Black lead - main winding amps
R = Red lead - start or auxiliary winding amps

(3) Control Boxes date coded 02C and older have **35 MFD** run capacitors. Current values should be Y14.0 @ FL and Y17.0 @ Max Load.
B12.2 B14.5
R4.7 R4.5

(4) Control Boxes date coded 01M and older have **60 MFD** run capacitors and the current values on a 4" motor will be Y23.0 @ FL - Y27.5 @ Max Load.
B19.1 B23.2
R8.0 R7.8

(5) Control Boxes date coded 01M and older have **60 MFD** run capacitors and the current values on a 6" motor will be Y23.0 @ FL -Y27.5 @ Max Load.
B18.2 B23.2
R8.0 R7.8

Performance is typical, not guaranteed, at specified voltages and specified capacitor values. Performance at voltage ratings not shown is similar, except amps vary inversely with voltage.

Table 14 Single-Phase Motor Fuse Sizing

TYPE	MOTOR MODEL PREFIX	RATING			CIRCUIT BREAKERS OR FUSE AMPS (MAXIMUM PER NEC)			CIRCUIT BREAKERS OR FUSE AMPS (TYPICAL SUBMERSIBLE)		
		HP	KW	VOLTS	STANDARD FUSE	DUAL ELEMENT TIME DELAY FUSE	CIRCUIT BREAKER	STANDARD FUSE	DUAL ELEMENT TIME DELAY FUSE	CIRCUIT BREAKER
4" 2-WIRE	244504	1/2	0.37	115	35	20	30	30	15	30
	244505	1/2	0.37	230	20	10	15	15	8	15
	244507	3/4	0.55	230	25	15	20	20	10	20
	244508	1	0.75	230	30	20	25	25	11	25
	244309	1.5	1.1	230	35	20	30	35	15	30
4" 3-WIRE	214504	1/2	0.37	115	35	20	30	30	15	30
	214505	1/2	0.37	230	20	10	15	15	8	15
	214507	3/4	0.55	230	25	15	20	20	10	20
	214508	1	0.75	230	30	20	25	25	11	25
4" 3-WIRE W/CRC CB	214505	1/2	0.37	230	20	10	15	15	8	15
	214507	3/4	0.55	230	25	15	20	20	10	20
	214508	1	0.75	230	30	20	25	25	11	25
4" 3-WIRE	214508 W/ 1-1.5 CB	1	0.75	230	30	20	25	25	11	25
	224300	1.5	1.1	230	35	20	30	30	15	30
	224301	2	1.5	230	30	20	25	30	15	25
	224302	3	2.2	230	45	30	40	45	20	40
	224303	5	3.7	230	80	45	60	70	30	60
6"	226110	5	3.7	230	80	45	60	70	30	60
	226111	7.5	5.5	230	125	70	100	110	50	100
	226112	10	7.5	230	150	80	125	150	60	125
	226113	15	11	230	200	125	175	200	90	175

Auxiliary Running Capacitors

Added capacitors must be connected across “Red” and “Black” control box terminals, in parallel with any existing running capacitors. The additional capacitor(s) should be mounted in an auxiliary box. The values of additional running capacitors most likely to reduce noise are given below. The tabulation gives the **max.** S.F. amps normally in each lead with the added capacitor.

Although motor amps decrease when auxiliary run capacitance is added, the load on the motor does not. If a motor is overloaded with normal capacitance, it still will be overloaded with auxiliary run capacitance, even though motor amps may be within nameplate values.

Table 15 Auxiliary Capacitor Sizing

MOTOR RATING		NORMAL RUNNING CAPACITOR(S)	AUXILIARY RUNNING CAPACITORS FOR NOISE REDUCTION			MAXIMUM AMPS WITH RUN CAP		
HP	VOLTS	MFD	MFD	MIN. VOLTS	FRANKLIN PART	YELLOW	BLACK	RED
1/2	115	0	60(1)	370	TWO 155327101	8.4	7.0	4.0
1/2	230	0	15(1)	370	ONE 155328101	4.2	3.5	2.0
3/4		0	20(1)	370	ONE 155328103	5.8	5.0	2.5
1		0	25(1)	370	ONE EA. 155328101 155328102	7.1	5.6	3.4
1.5		10	20	370	ONE 155328103	9.3	7.5	4.4
2		20	10	370	ONE 155328102	11.2	9.2	3.8
3		45	NONE	370		17.0	12.6	6.0
5		80	NONE	370		27.5	19.1	10.8
7.5		45	45	370	ONE EA. 155327101 155328101	37.0	32.0	11.3
10		70	30	370	ONE 155327101	49.0	42.0	13.0
15		135	NONE			75.0	62.5	16.9

(1) Do not add running capacitors to 1/3 through 1 hp control boxes, which use solid state switches or QD relays. Adding capacitors will cause switch failure. If the control box is converted to use a voltage relay, the specified running capacitance can be added.

Buck-Boost Transformers

When the available power supply voltage is not within the proper range, a buck-boost transformer is often used to adjust voltage to match the motor. The most common usage on submersible motors is boosting a 208 volt supply to use a standard 230 volt single-phase submersible motor and control. While tables to give a wide range of voltage boost or buck are published by transformer manufacturers, the following table shows Franklin’s recommendations. The table, based on boosting the voltage 10%, shows the minimum rated transformer kVA needed and the common standard transformer kVA.

Table 15A Buck-Boost Transformer Sizing

MOTOR HP	1/3	1/2	3/4	1	1.5	2	3	5	7.5	10	15
LOAD KVA	1.02	1.36	1.84	2.21	2.65	3.04	3.91	6.33	9.66	11.70	16.60
MINIMUM XFMR KVA	0.11	0.14	0.19	0.22	0.27	0.31	0.40	0.64	0.97	1.20	1.70
STANDARD XFMR KVA	0.25	0.25	0.25	0.25	0.50	0.50	0.50	0.75	1.00	1.50	2.00

Buck-Boost transformers are power transformers, not control transformers. They may also be used to lower voltage when the available power supply voltage is too high.

Table 16 Three-Phase 60 °C Cable, 60 Hz (Service Entrance to Motor) Maximum Length in Feet

60 °C

MOTOR RATING			60 °C INSULATION - AWG COPPER WIRE SIZE													MCM COPPER WIRE SIZE				
VOLTS	HP	KW	14	12	10	8	6	4	3	2	1	0	00	000	0000	250	300	350	400	500
200 V 60 Hz Three-Phase 3 - Lead	1/2	0.37	710	1140	1800	2840	4420													
	3/4	0.55	510	810	1280	2030	3160													
	1	0.75	430	690	1080	1710	2670	4140	5140											
	1.5	1.1	310	500	790	1260	1960	3050	3780											
	2	1.5	240	390	610	970	1520	2360	2940	3610	4430	5420								
	3	2.2	180	290	470	740	1160	1810	2250	2760	3390	4130								
	5	3.7	**110**	170	280	440	690	1080	1350	1660	2040	2490	3050	3670	4440	5030				
	7.5	5.5	0	0	200	310	490	770	960	1180	1450	1770	2170	2600	3150	3560				
	10	7.5	0	0	0	**230**	370	570	720	880	1090	1330	1640	1970	2390	2720	3100	3480	3800	4420
	15	11	0	0	0	**160**	**250**	390	490	600	740	910	1110	1340	1630	1850	2100	2350	2570	2980
	20	15	0	0	0	0	**190**	**300**	380	460	570	700	860	1050	1270	1440	1650	1850	2020	2360
	25	18.5	0	0	0	0	0	**240**	**300**	**370**	460	570	700	840	1030	1170	1330	1500	1640	1900
	30	22	0	0	0	0	0	0	**250**	**310**	**380**	470	580	700	850	970	1110	1250	1360	1590
230 V 60 Hz Three-Phase 3 - Lead	1/2	0.37	930	1490	2350	3700	5760	8910												
	3/4	0.55	670	1080	1700	2580	4190	6490	8060	9860										
	1	0.75	560	910	1430	2260	3520	5460	6780	8290										
	1.5	1.1	420	670	1060	1670	2610	4050	5030	6160	7530	9170								
	2	1.5	320	510	810	1280	2010	3130	3890	4770	5860	7170	8780							
	3	2.2	240	390	620	990	1540	2400	2980	3660	4480	5470	6690	8020	9680					
	5	3.7	**140**	230	370	590	920	1430	1790	2190	2690	3290	4030	4850	5870	6650	7560	8460	9220	
	7.5	5.5	0	**160**	260	420	650	1020	1270	1560	1920	2340	2870	3440	4160	4710	5340	5970	6500	7510
	10	7.5	0	0	**190**	310	490	760	950	1170	1440	1760	2160	2610	3160	3590	4100	4600	5020	5840
	15	11	0	0	0	**210**	330	520	650	800	980	1200	1470	1780	2150	2440	2780	3110	3400	3940
	20	15	0	0	0	0	**250**	400	500	610	760	930	1140	1380	1680	1910	2180	2450	2680	3120
	25	18.5	0	0	0	0	0	**320**	400	500	610	750	920	1120	1360	1540	1760	1980	2160	2520
	30	22	0	0	0	0	0	**260**	**330**	**410**	510	620	760	930	1130	1280	1470	1650	1800	2110
380 V 60 Hz Three-Phase 3 - Lead	1/2	0.37	2690	4290	6730															
	3/4	0.55	2000	3190	5010	7860														
	1	0.75	1620	2580	4060	6390	9980													
	1.5	1.1	1230	1970	3100	4890	7630													
	2	1.5	870	1390	2180	3450	5400	8380												
	3	2.2	680	1090	1710	2690	4200	6500	8020	9830										
	5	3.7	400	640	1010	1590	2490	3870	4780	5870	7230	8830								
	7.5	5.5	270	440	690	1090	1710	2640	3260	4000	4930	6010	7290	8780						
	10	7.5	**200**	**320**	510	800	1250	1930	2380	2910	3570	4330	5230	6260	7390	8280	9340			
	15	11	0	0	**370**	590	920	1430	1770	2170	2690	3290	4000	4840	5770	6520	7430	8250	8990	
	20	15	0	0	0	**440**	700	1090	1350	1670	2060	2530	3090	3760	4500	5110	5840	6510	7120	8190
	25	18.5	0	0	0	**360**	570	880	1100	1350	1670	2050	2510	3040	3640	4130	4720	5250	5740	6590
	30	22	0	0	0	0	**470**	730	910	1120	1380	1700	2080	2520	3020	3430	3920	4360	4770	5490
	40	30	0	0	0	0	0	**530**	660	820	1010	1240	1520	1840	2200	2500	2850	3170	3470	3990
	50	37	0	0	0	0	0	0	**540**	**660**	820	1000	1220	1480	1770	2010	2290	2550	2780	3190
	60	45	0	0	0	0	0	0	0	**560**	**690**	850	1030	1250	1500	1700	1940	2150	2350	2700
	75	55	0	0	0	0	0	0	0	0	**570**	**700**	**860**	1050	1270	1440	1660	1850	2030	2350
	100	75	0	0	0	0	0	0	0	0	0	**510**	**630**	**760**	910	1030	1180	1310	1430	1650
	125	93	0	0	0	0	0	0	0	0	0	0	0	**620**	**740**	**840**	**950**	1060	1160	1330
	150	110	0	0	0	0	0	0	0	0	0	0	0	0	**620**	**700**	**790**	**880**	**960**	1090
	175	130	0	0	0	0	0	0	0	0	0	0	0	0	0	**650**	**750**	**840**	**920**	1070
	200	150	0	0	0	0	0	0	0	0	0	0	0	0	0	0	**630**	**700**	**760**	**880**

Lengths in **BOLD** only meet the US National Electrical Code ampacity requirements for individual conductors in free air or water. Lengths NOT in bold meet NEC ampacity requirements for either individual conductors or jacketed cable. See page 11 for additional details.

Continued on next page

Table 17 Three-Phase 60 °C Cable (Continued)

60 °C

MOTOR RATING			60 °C INSULATION - AWG COPPER WIRE SIZE													MCM COPPER WIRE SIZE				
VOLTS	HP	KW	14	12	10	8	6	4	3	2	1	0	00	000	0000	250	300	350	400	500
460 V 60 Hz Three-Phase 3 - Lead	1/2	0.37	3770	6020	9460															
	3/4	0.55	2730	4350	6850															
	1	0.75	2300	3670	5770	9070														
	1.5	1.1	1700	2710	4270	6730														
	2	1.5	1300	2070	3270	5150	8050													
	3	2.2	1000	1600	2520	3970	6200													
	5	3.7	590	950	1500	2360	3700	5750												
	7.5	5.5	420	680	1070	1690	2640	4100	5100	6260	7680									
	10	7.5	310	500	790	1250	1960	3050	3800	4680	5750	7050								
	15	11	0	**340**	540	850	1340	2090	2600	3200	3930	4810	5900	7110						
	20	15	0	0	**410**	650	1030	1610	2000	2470	3040	3730	4580	5530						
	25	18.5	0	0	0	**530**	830	1300	1620	1990	2450	3010	3700	4470	5430					
	30	22	0	0	0	**430**	680	1070	1330	1640	2030	2490	3060	3700	4500	5130	5860			
	40	30	0	0	0	0	**500**	790	980	1210	1490	1830	2250	2710	3290	3730	4250			
	50	37	0	0	0	0	0	**640**	800	980	1210	1480	1810	2190	2650	3010	3420	3830	4180	4850
	60	45	0	0	0	0	0	**540**	**670**	**830**	1020	1250	1540	1850	2240	2540	2890	3240	3540	4100
	75	55	0	0	0	0	0	0	0	**680**	**840**	1030	1260	1520	1850	2100	2400	2700	2950	3440
	100	75	0	0	0	0	0	0	0	0	**620**	**760**	**940**	1130	1380	1560	1790	2010	2190	2550
	125	93	0	0	0	0	0	0	0	0	0	0	**740**	**890**	**1000**	1220	1390	1560	1700	1960
	150	110	0	0	0	0	0	0	0	0	0	0	0	**760**	**920**	**1050**	**1190**	1340	1460	1690
	175	130	0	0	0	0	0	0	0	0	0	0	0	0	**810**	**930**	**1060**	**1190**	1300	1510
	200	150	0	0	0	0	0	0	0	0	0	0	0	0	0	**810**	**920**	**1030**	**1130**	1310
575 V 60 Hz Three-Phase 3 - Lead	1/2	0.37	5900	9410																
	3/4	0.55	4270	6810																
	1	0.75	3630	5800	9120															
	1.5	1.1	2620	4180	6580															
	2	1.5	2030	3250	5110	8060														
	3	2.2	1580	2530	3980	6270														
	5	3.7	920	1480	2330	3680	5750													
	7.5	5.5	660	1060	1680	2650	4150													
	10	7.5	490	780	1240	1950	3060	4770	5940											
	15	11	**330**	530	850	1340	2090	3260	4060											
	20	15	0	**410**	650	1030	1610	2520	3140	3860	4760	5830								
	25	18.5	0	0	**520**	830	1300	2030	2530	3110	3840	4710								
	30	22	0	0	**430**	680	1070	1670	2080	2560	3160	3880	4770	5780	7030	8000				
	40	30	0	0	0	**500**	790	1240	1540	1900	2330	2860	3510	4230	5140	5830				
	50	37	0	0	0	0	**640**	1000	1250	1540	1890	2310	2840	3420	4140	4700	5340	5990	6530	7580
	60	45	0	0	0	0	0	**850**	1060	1300	1600	1960	2400	2890	3500	3970	4520	5070	5530	6410
	75	55	0	0	0	0	0	**690**	**860**	**1060**	1310	1600	1970	2380	2890	3290	3750	5220	4610	5370
	100	75	0	0	0	0	0	0	0	**790**	**970**	**1190**	1460	1770	2150	2440	2790	3140	3430	3990
	125	93	0	0	0	0	0	0	0	0	**770**	**950**	**1160**	1400	1690	1920	2180	2440	2650	3070
	150	110	0	0	0	0	0	0	0	0	0	**800**	**990**	**1190**	1440	1630	1860	2080	2270	2640
	175	130	0	0	0	0	0	0	0	0	0	0	**870**	**1050**	**1270**	**1450**	1650	1860	2030	2360
	200	150	0	0	0	0	0	0	0	0	0	0	0	**920**	**1110**	**1260**	**1440**	1620	1760	2050

Lengths in **BOLD** only meet the US National Electrical Code ampacity requirements for individual conductors in free air or water. Lengths NOT in bold meet NEC ampacity requirements for either individual conductors or jacketed cable. See 11 for additional details.

Continued on next page

Table 18 Three-Phase 60 °C Cable (Continued)

60 °C

MOTOR RATING			60 °C INSULATION - AWG COPPER WIRE SIZE													MCM COPPER WIRE SIZE				
VOLTS	HP	KW	14	12	10	8	6	4	3	2	1	0	00	000	0000	250	300	350	400	500
200 V 60 Hz Three-Phase 6 - Lead Y-D	5	3.7	160	250	420	660	1030	1620	2020	2490	3060	3730	4570	5500	6660	7540				
	7.5	5.5	110	180	300	460	730	1150	1440	1770	2170	2650	3250	3900	4720	5340				
	10	7.5	**80**	130	210	340	550	850	1080	1320	1630	1990	2460	2950	3580	4080	4650	5220	5700	6630
	15	11	0	0	**140**	240	370	580	730	900	1110	1360	1660	2010	2440	2770	3150	3520	3850	4470
	20	15	0	0	0	**170**	280	450	570	690	850	1050	1290	1570	1900	2160	2470	2770	3030	3540
	25	18.5	0	0	0	**140**	**220**	360	450	550	690	850	1050	1260	1540	1750	1990	2250	2460	2850
	30	22	0	0	0	0	**180**	294	370	460	570	700	870	1050	1270	1450	1660	1870	2040	2380
230 V 60 Hz Three-Phase 6 - Lead Y-D	5	3.7	210	340	550	880	1380	2140	2680	3280	4030	4930	6040	7270	8800	9970				
	7.5	5.5	150	240	390	630	970	1530	1900	2340	2880	3510	4300	5160	6240	7060	8010	8950	9750	
	10	7.5	**110**	180	280	460	730	1140	1420	1750	2160	2640	3240	3910	4740	5380	6150	6900	7530	8760
	15	11	0	0	**190**	310	490	780	970	1200	1470	1800	2200	2670	3220	3660	4170	4660	5100	5910
	20	15	0	0	**140**	230	370	600	750	910	1140	1390	1710	2070	2520	2860	3270	3670	4020	4680
	25	18.5	0	0	0	**190**	300	480	600	750	910	1120	1380	1680	2040	2310	2640	2970	3240	3780
	30	22	0	0	0	**150**	**240**	390	490	610	760	930	1140	1390	1690	1920	2200	2470	2700	3160
380 V 60 Hz Three-Phase 6 - Lead Y-D	5	3.7	600	960	1510	2380	3730	5800	7170	8800										
	7.5	5.5	400	660	1030	1630	2560	3960	4890	6000	7390	9010								
	10	7.5	300	480	760	1200	1870	2890	3570	4360	5350	6490	7840	9390						
	15	11	210	340	550	880	1380	2140	2650	3250	4030	4930	6000	7260	8650	9780				
	20	15	**160**	260	410	660	1050	1630	2020	2500	3090	3790	4630	5640	6750	7660	4260	9760		
	25	18.5	0	**210**	330	540	850	1320	1650	2020	2500	3070	3760	4560	5460	6190	7080	7870	8610	9880
	30	22	0	0	**270**	430	700	1090	1360	1680	2070	2550	3120	3780	4530	5140	5880	6540	7150	8230
	40	30	0	0	0	**320**	510	790	990	1230	1510	1860	2280	2760	3300	3750	4270	4750	5200	5980
	50	37	0	0	0	**250**	**400**	630	810	990	1230	1500	1830	2220	2650	3010	3430	3820	4170	4780
	60	45	0	0	0	0	**340**	540	660	840	1030	1270	1540	1870	2250	2550	2910	3220	3520	4050
	75	55	0	0	0	0	0	**450**	550	690	855	1050	1290	1570	1900	2160	2490	2770	3040	3520
	100	75	0	0	0	0	0	0	**420**	**520**	640	760	940	1140	1360	1540	1770	1960	2140	2470
	125	93	0	0	0	0	0	0	0	**400**	**490**	**600**	730	930	1110	1260	1420	1590	1740	1990
	150	110	0	0	0	0	0	0	0	0	**420**	**510**	**620**	750	930	1050	1180	1320	1440	1630
	175	130	0	0	0	0	0	0	0	0	**360**	**440**	**540**	660	780	970	1120	1260	1380	1600
	200	150	0	0	0	0	0	0	0	0	0	0	**480**	**580**	**690**	790	940	1050	1140	1320
460 V 60 Hz Three-Phase 6 - Lead Y-D	5	3.7	880	1420	2250	3540	5550	8620												
	7.5	5.5	630	1020	1600	2530	3960	6150	7650	9390										
	10	7.5	460	750	1180	1870	2940	4570	5700	7020	8620									
	15	11	310	510	810	1270	2010	3130	3900	4800	5890	7210	8850							
	20	15	**230**	380	610	970	1540	2410	3000	3700	4560	5590	6870	8290						
	25	18.5	**190**	310	490	790	1240	1950	2430	2980	3670	4510	5550	6700	8140					
	30	22	0	**250**	410	640	1020	1600	1990	2460	3040	3730	4590	5550	6750	7690	8790			
	40	30	0	0	**300**	480	750	1180	1470	1810	2230	2740	3370	4060	4930	5590	6370			
	50	37	0	0	0	**370**	590	960	1200	1470	1810	2220	2710	3280	3970	4510	5130	5740	6270	7270
	60	45	0	0	0	**320**	**500**	810	1000	1240	1530	1870	2310	2770	3360	3810	4330	4860	5310	6150
	75	55	0	0	0	0	**420**	660	810	1020	1260	1540	1890	2280	2770	3150	3600	4050	4420	5160
	100	75	0	0	0	0	0	**500**	**610**	760	930	1140	1410	1690	2070	2340	2680	3010	3280	3820
	125	93	0	0	0	0	0	0	**470**	**590**	**730**	880	1110	1330	1500	1830	2080	2340	2550	2940
	150	110	0	0	0	0	0	0	0	**510**	**630**	**770**	950	1140	1380	1570	1790	2000	2180	2530
	175	130	0	0	0	0	0	0	0	0	**550**	**680**	**830**	1000	1220	1390	1580	1780	1950	2270
	200	150	0	0	0	0	0	0	0	0	0	**590**	**730**	**880**	1070	1210	1380	1550	1690	1970
575 V 60 Hz Three-Phase 6 - Lead Y-D	5	3.7	1380	2220	3490	5520	8620													
	7.5	5.5	990	1590	2520	3970	6220													
	10	7.5	730	1170	1860	2920	4590	7150	8910											
	15	11	490	790	1270	2010	3130	4890	6090											
	20	15	370	610	970	1540	2410	3780	4710	5790	7140	8740								
	25	18.5	**300**	490	780	1240	1950	3040	3790	4660	5760	7060								
	30	22	**240**	400	645	1020	1600	2500	3120	3840	4740	5820	7150	8670						
	40	30	0	**300**	480	750	1180	1860	2310	2850	3490	4290	5260	6340	7710	8740				
	50	37	0	0	**380**	590	960	1500	1870	2310	2830	3460	4260	5130	6210	7050	8010	8980	9790	
	60	45	0	0	0	**500**	**790**	1270	1590	1950	2400	2940	3600	4330	5250	5950	6780	7600	8290	9610
	75	55	0	0	0	**420**	**660**	1030	1290	1590	1960	2400	2950	3570	4330	4930	5620	6330	6910	8050
	100	75	0	0	0	0	**400**	**780**	960	1180	1450	1780	2190	2650	3220	3660	4180	4710	5140	5980
	125	93	0	0	0	0	0	**600**	**740**	920	1150	1420	1740	2100	2530	2880	3270	3660	3970	4600
	150	110	0	0	0	0	0	0	**650**	**800**	**990**	1210	1480	1780	2160	2450	2790	3120	3410	3950
	175	130	0	0	0	0	0	0	0	**700**	**860**	1060	1300	1570	1910	2170	2480	2780	3040	3540
	200	150	0	0	0	0	0	0	0	0	**760**	**930**	1140	1370	1670	1890	2160	2420	2640	3070

Lengths in **BOLD** only meet the US National Electrical Code ampacity requirements for individual conductors in free air or water. Lengths NOT in bold meet NEC ampacity requirements for either individual conductors or jacketed cable. See page 11 for additional details.

Table 19 Three-Phase 75 °C Cable, 60 Hz (Service Entrance to Motor) Maximum Length in Feet

75 °C

MOTOR RATING			75 °C INSULATION - AWG COPPER WIRE SIZE													MCM COPPER WIRE SIZE				
VOLTS	HP	KW	14	12	10	8	6	4	3	2	1	0	00	000	0000	250	300	350	400	500
200 V 60 Hz Three-Phase 3 - Lead	1/2	0.37	710	1140	1800	2840	4420													
	3/4	0.55	510	810	1280	2030	3160													
	1	0.75	430	690	1080	1710	2670	4140	5140											
	1.5	1.1	310	500	790	1260	1960	3050	3780											
	2	1.5	240	390	610	970	1520	2360	2940	3610	4430	5420								
	3	2.2	180	290	470	740	1160	1810	2250	2760	3390	4130								
	5	3.7	**110**	170	280	440	690	1080	1350	1660	2040	2490	3050	3670	4440	5030				
	7.5	5.5	0	0	200	310	490	770	960	1180	1450	1770	2170	2600	3150	3560				
	10	7.5	0	0	**150**	230	370	570	720	880	1090	1330	1640	1970	2390	2720	3100	3480	3800	4420
	15	11	0	0	0	**160**	250	390	490	600	740	910	1110	1340	1630	1850	2100	2350	2570	2980
	20	15	0	0	0	0	**190**	300	380	460	570	700	860	1050	1270	1440	1650	1850	2020	2360
	25	18.5	0	0	0	0	0	**240**	300	370	460	570	700	840	1030	1170	1330	1500	1640	1900
	30	22	0	0	0	0	0	**200**	**250**	310	380	470	580	700	850	970	1110	1250	1360	1590
230 V 60 Hz Three-Phase 3 - Lead	1/2	0.37	930	1490	2350	3700	5760	8910												
	3/4	0.55	670	1080	1700	2580	4190	6490	8060	9860										
	1	0.75	560	910	1430	2260	3520	5460	6780	8290										
	1.5	1.1	420	670	1060	1670	2610	4050	5030	6160	7530	9170								
	2	1.5	320	510	810	1280	2010	3130	3890	4770	5860	7170	8780							
	3	2.2	240	390	620	990	1540	2400	2980	3660	4480	5470	6690	8020	9680					
	5	3.7	**140**	230	370	590	920	1430	1790	2190	2690	3290	4030	4850	5870	6650	7560	8460	9220	
	7.5	5.5	0	**160**	260	420	650	1020	1270	1560	1920	2340	2870	3440	4160	4710	5340	5970	6500	7510
	10	7.5	0	0	**190**	310	490	760	950	1170	1440	1760	2160	2610	3160	3590	4100	4600	5020	5840
	15	11	0	0	0	**210**	330	520	650	800	980	1200	1470	1780	2150	2440	2780	3110	3400	3940
	20	15	0	0	0	**160**	**250**	400	500	610	760	930	1140	1380	1680	1910	2180	2450	2680	3120
	25	18.5	0	0	0	0	**200**	320	400	500	610	750	920	1120	1360	1540	1760	1980	2160	2520
	30	22	0	0	0	0	0	**260**	330	410	510	620	760	930	1130	1280	1470	1650	1800	2110
380 V 60 Hz Three-Phase 3 - Lead	1/2	0.37	2690	4290	6730															
	3/4	0.55	2000	3190	5010	7860														
	1	0.75	1620	2580	4060	6390	9980													
	1.5	1.1	1230	1970	3100	4890	7630													
	2	1.5	870	1390	2180	3450	5400	8380												
	3	2.2	680	1090	1710	2690	4200	6500	8020	9830										
	5	3.7	400	640	1010	1590	2490	3870	4780	5870	7230	8830								
	7.5	5.5	270	440	690	1090	1710	2640	3260	4000	4930	6010	7290	8780						
	10	7.5	**200**	320	510	800	1250	1930	2380	2910	3570	4330	5230	6260	7390	8280	9340			
	15	11	0	0	370	590	920	1430	1770	2170	2690	3290	4000	4840	5770	6520	7430	8250	8990	
	20	15	0	0	**280**	440	700	1090	1350	1670	2060	2530	3090	3760	4500	5110	2840	6510	7120	8190
	25	18.5	0	0	0	**360**	570	880	1100	1350	1670	2050	2510	3040	3640	4130	4720	5250	5740	6590
	30	22	0	0	0	**290**	470	730	910	1120	1380	1700	2080	2520	3020	3430	3920	4360	4770	5490
	40	30	0	0	0	0	0	**530**	660	820	1010	1240	1520	1840	2200	2500	2850	3170	3470	3990
	50	37	0	0	0	0	0	**440**	**540**	660	820	1000	1220	1480	1770	2010	2290	2550	2780	3190
	60	45	0	0	0	0	0	**370**	**460**	**560**	690	850	1030	1250	1500	1700	1940	2150	2350	2700
	75	55	0	0	0	0	0	0	0	**460**	**570**	700	860	1050	1270	1440	1660	1850	2030	2350
	100	75	0	0	0	0	0	0	0	0	**420**	**510**	**630**	760	910	1030	1180	1310	1430	1650
	125	93	0	0	0	0	0	0	0	0	0	0	**510**	**620**	**740**	840	950	1060	1160	1330
	150	110	0	0	0	0	0	0	0	0	0	0	0	**520**	**620**	**700**	**790**	880	960	1090
	175	130	0	0	0	0	0	0	0	0	0	0	0	0	**560**	**650**	**750**	**840**	920	1070
	200	150	0	0	0	0	0	0	0	0	0	0	0	0	0	**550**	**630**	**700**	**760**	880

Lengths in **BOLD** only meet the US National Electrical Code ampacity requirements for individual conductors in free air or water. Lengths NOT in bold meet NEC ampacity requirements for either individual conductors or jacketed cable. See page 11 for additional details.

Continued on next page

Table 20 Three-Phase 75 °C Cable (Continued)

75 °C

MOTOR RATING			75 °C INSULATION - AWG COPPER WIRE SIZE													MCM COPPER WIRE SIZE				
VOLTS	HP	KW	14	12	10	8	6	4	3	2	1	0	00	000	0000	250	300	350	400	500
460 V 60 Hz Three-Phase 3 - Lead	1/2	0.37	3770	6020	9460															
	3/4	0.55	2730	4350	6850															
	1	0.75	2300	3670	5770	9070														
	1.5	1.1	1700	2710	4270	6730														
	2	1.5	1300	2070	3270	5150	8050													
	3	2.2	1000	1600	2520	3970	6200													
	5	3.7	590	950	1500	2360	3700	5750												
	7.5	5.5	420	680	1070	1690	2640	4100	5100	6260	7680									
	10	7.5	310	500	790	1250	1960	3050	3800	4680	5750	7050								
	15	11	0	**340**	540	850	1340	2090	2600	3200	3930	4810	5900	7110						
	20	15	0	0	410	650	1030	1610	2000	2470	3040	3730	4580	5530						
	25	18.5	0	0	**330**	530	830	1300	1620	1990	2450	3010	3700	4470	5430					
	30	22	0	0	**270**	430	680	1070	1330	1640	2030	2490	3060	3700	4500	5130	5860			
	40	30	0	0	0	**320**	**500**	790	980	1210	1490	1830	2250	2710	3290	3730	4250			
	50	37	0	0	0	0	**410**	640	800	980	1210	1480	1810	2190	2650	3010	3420	3830	4180	4850
	60	45	0	0	0	0	0	**540**	**670**	830	1020	1250	1540	1850	2240	2540	2890	3240	3540	4100
	75	55	0	0	0	0	0	**440**	**550**	**680**	840	1030	1260	1520	1850	2100	2400	2700	2950	3440
	100	75	0	0	0	0	0	0	0	**500**	**620**	**760**	940	1130	1380	1560	1790	2010	2190	2550
	125	93	0	0	0	0	0	0	0	0	0	**600**	**740**	**890**	1000	1220	1390	1560	1700	1960
	150	110	0	0	0	0	0	0	0	0	0	0	**630**	**760**	**920**	1050	1190	1340	1460	1690
	175	130	0	0	0	0	0	0	0	0	0	0	0	**670**	**810**	**930**	1060	1190	1300	1510
	200	150	0	0	0	0	0	0	0	0	0	0	0	**590**	**710**	**810**	**920**	1030	1130	1310
575 V 60 Hz Three-Phase 3 - Lead	1/2	0.37	5900	9410																
	3/4	0.55	4270	6810																
	1	0.75	3630	5800	9120															
	1.5	1.1	2620	4180	6580															
	2	1.5	2030	3250	5110	8060														
	3	2.2	1580	2530	3980	6270														
	5	3.7	920	1480	2330	3680	5750													
	7.5	5.5	660	1060	1680	2650	4150													
	10	7.5	490	780	1240	1950	3060	4770	5940											
	15	11	**330**	530	850	1340	2090	3260	4060											
	20	15	0	**410**	650	1030	1610	2520	3140	3860	4760	5830								
	25	18.5	0	0	520	830	1300	2030	2530	3110	3840	4710								
	30	22	0	0	**430**	680	1070	1670	2080	2560	3160	3880	4770	5780	7030	8000				
	40	30	0	0	0	**500**	790	1240	1540	1900	2330	2860	3510	4230	5140	5830				
	50	37	0	0	0	**410**	**640**	1000	1250	1540	1890	2310	2840	3420	4140	4700	5340	5990	6530	7580
	60	45	0	0	0	0	**540**	850	1060	1300	1600	1960	2400	2890	3500	3970	4520	5070	5530	6410
	75	55	0	0	0	0	0	**690**	860	1060	1310	1600	1970	2380	2890	3290	3750	5220	4610	5370
	100	75	0	0	0	0	0	0	**640**	**790**	970	1190	1460	1770	2150	2440	2790	3140	3430	3990
	125	93	0	0	0	0	0	0	0	**630**	**770**	**950**	1160	1400	1690	1920	2180	2440	2650	3070
	150	110	0	0	0	0	0	0	0	0	**660**	**800**	**990**	1190	1440	1630	1860	2080	2270	2640
	175	130	0	0	0	0	0	0	0	0	0	**700**	**870**	**1050**	1270	1450	1650	1860	2030	2360
	200	150	0	0	0	0	0	0	0	0	0	0	**760**	**920**	**1110**	1260	1440	1620	1760	2050

Lengths in **BOLD** only meet the US National Electrical Code ampacity requirements for individual conductors in free air or water. Lengths NOT in bold meet NEC ampacity requirements for either individual conductors or jacketed cable. See page 11 for additional details.

Continued on next page

APPLICATION
Three-Phase Motors

Table 21 Three-Phase 75 °C Cable (Continued)

75 °C

MOTOR RATING			75 °C INSULATION - AWG COPPER WIRE SIZE													MCM COPPER WIRE SIZE				
VOLTS	HP	KW	14	12	10	8	6	4	3	2	1	0	00	000	0000	250	300	350	400	500
200 V 60 Hz Three-Phase 6 - Lead Y-D	5	3.7	160	250	420	660	1030	1620	2020	2490	3060	3730	4570	5500	6660	7540				
	7.5	5.5	110	180	300	460	730	1150	1440	1770	2170	2650	3250	3900	4720	5340				
	10	7.5	**80**	130	210	340	550	850	1080	1320	1630	1990	2460	2950	3580	4080	4650	5220	5700	6630
	15	11	0	0	140	240	370	580	730	900	1110	1360	1660	2010	2440	2770	3150	3520	3850	4470
	20	15	0	0	**120**	170	280	450	570	690	850	1050	1290	1570	1900	2160	2470	2770	3030	3540
	25	18.5	0	0	0	**140**	220	360	450	550	690	850	1050	1260	1540	1750	1990	2250	2460	2850
	30	22	0	0	0	**120**	**180**	294	370	460	570	700	870	1050	1270	1450	1660	1870	2040	2380
230 V 60 Hz Three-Phase 6 - Lead Y-D	5	3.7	210	340	550	880	1380	2140	2680	3280	4030	4930	6040	7270	8800	9970				
	7.5	5.5	150	240	390	630	970	1530	1900	2340	2880	3510	4300	5160	6240	7060	8010	8950	9750	
	10	7.5	**110**	180	280	460	730	1140	1420	1750	2160	2640	3240	3910	4740	5380	6150	6900	7530	8760
	15	11	0	**130**	190	310	490	780	970	1200	1470	1800	2200	2670	3220	3660	4170	4660	5100	5910
	20	15	0	0	**140**	230	370	600	750	910	1140	1390	1710	2070	2520	2860	3270	3670	4020	4680
	25	18.5	0	0	**120**	190	300	480	600	750	910	1120	1380	1680	2040	2310	2640	2970	3240	3780
	30	22	0	0	0	**150**	240	390	490	610	760	930	1140	1390	1690	1920	2200	2470	2700	3160
380 V 60 Hz Three-Phase 6 - Lead Y-D	5	3.7	600	960	1510	2380	3730	5800	7170	8800										
	7.5	5.5	400	660	1030	1630	2560	3960	4890	6000	7390	9010								
	10	7.5	300	480	760	1200	1870	2890	3570	4360	5350	6490	7840	9390						
	15	11	210	340	550	880	1380	2140	2650	3250	4030	4930	6000	7260	8650	9780				
	20	15	**160**	260	410	660	1050	1630	2020	2500	3090	3790	4630	5640	6750	7660	4260	9760		
	25	18.5	0	**210**	330	540	850	1320	1650	2020	2500	3070	3760	4560	5460	6190	7080	7870	8610	9880
	30	22	0	0	**270**	430	700	1090	1360	1680	2070	2550	3120	3780	4530	5140	5880	6540	7150	8230
	40	30	0	0	**210**	320	510	790	990	1230	1510	1860	2280	2760	3300	3750	4270	4750	5200	5980
	50	37	0	0	0	**250**	400	630	810	990	1230	1500	1830	2220	2650	3010	3430	3820	4170	4780
	60	45	0	0	0	0	**340**	540	660	840	1030	1270	1540	1870	2250	2550	2910	3220	3520	4050
	75	55	0	0	0	0	**290**	450	550	690	855	1050	1290	1570	1900	2160	2490	2770	3040	3520
	100	75	0	0	0	0	0	**340**	**420**	520	640	760	940	1140	1360	1540	1770	1960	2140	2470
	125	93	0	0	0	0	0	0	**340**	**400**	**490**	600	730	930	1110	1260	1420	1590	1740	1990
	150	110	0	0	0	0	0	0	0	**350**	**420**	**510**	620	750	930	1050	1180	1320	1440	1630
	175	130	0	0	0	0	0	0	0	0	**360**	**440**	**540**	660	780	970	1120	1260	1380	1600
	200	150	0	0	0	0	0	0	0	0	0	**410**	**480**	**580**	690	790	940	1050	1140	1320
460 V 60 Hz Three-Phase 6 - Lead Y-D	5	3.7	880	1420	2250	3540	5550	8620												
	7.5	5.5	630	1020	1600	2530	3960	6150	7650	9390										
	10	7.5	460	750	1180	1870	2940	4570	5700	7020	8620									
	15	11	310	510	810	1270	2010	3130	3900	4800	5890	7210	8850							
	20	15	230	380	610	970	1540	2410	3000	3700	4560	5590	6870	8290						
	25	18.5	**190**	310	490	790	1240	1950	2430	2980	3670	4510	5550	6700	8140					
	30	22	0	**250**	410	640	1020	1600	1990	2460	3040	3730	4590	5550	6750	7690	8790			
	40	30	0	0	**300**	480	750	1180	1470	1810	2230	2740	3370	4060	4930	5590	6370			
	50	37	0	0	**250**	370	590	960	1200	1470	1810	2220	2710	3280	3970	4510	5130	5740	6270	7270
	60	45	0	0	0	**320**	500	810	1000	1240	1530	1870	2310	2770	3360	3810	4330	4860	5310	6150
	75	55	0	0	0	0	**420**	660	810	1020	1260	1540	1890	2280	2770	3150	3600	4050	4420	5160
	100	75	0	0	0	0	**310**	**500**	610	760	930	1140	1410	1690	2070	2340	2680	3010	3280	3820
	125	93	0	0	0	0	0	**390**	**470**	**590**	730	880	1110	1330	1500	1830	2080	2340	2550	2940
	150	110	0	0	0	0	0	0	**420**	**510**	**630**	770	950	1140	1380	1570	1790	2000	2180	2530
	175	130	0	0	0	0	0	0	0	**450**	**550**	**680**	830	1000	1220	1390	1580	1780	1950	2270
	200	150	0	0	0	0	0	0	0	0	**480**	**590**	**730**	880	1070	1210	1380	1550	1690	1970
575 V 60 Hz Three-Phase 6 - Lead Y-D	5	3.7	1380	2220	3490	5520	8620													
	7.5	5.5	990	1590	2520	3970	6220													
	10	7.5	730	1170	1860	2920	4590	7150	8910											
	15	11	490	790	1270	2010	3130	4890	6090											
	20	15	370	610	970	1540	2410	3780	4710	5790	7140	8740								
	25	18.5	**300**	490	780	1240	1950	3040	3790	4660	5760	7060								
	30	22	**240**	400	645	1020	1600	2500	3120	3840	4740	5820	7150	8670						
	40	30	0	**300**	480	750	1180	1860	2310	2850	3490	4290	5260	6340	7710	8740				
	50	37	0	0	**380**	590	960	1500	1870	2310	2830	3460	4260	5130	6210	7050	8010	8980	9790	
	60	45	0	0	**330**	500	790	1270	1590	1950	2400	2940	3600	4330	5250	5950	6780	7600	8290	9610
	75	55	0	0	0	**420**	660	1030	1290	1590	1960	2400	2950	3570	4330	4930	5620	6330	6910	8050
	100	75	0	0	0	0	**400**	780	960	1180	1450	1780	2190	2650	3220	3660	4180	4710	5140	5980
	125	93	0	0	0	0	0	**600**	740	920	1150	1420	1740	2100	2530	2880	3270	3660	3970	4600
	150	110	0	0	0	0	0	**520**	**650**	800	990	1210	1480	1780	2160	2450	2790	3120	3410	3950
	175	130	0	0	0	0	0	0	**570**	**700**	860	1060	1300	1570	1910	2170	2480	2780	3040	3540
	200	150	0	0	0	0	0	0	**500**	**610**	**760**	930	1140	1370	1670	1890	2160	2420	2640	3070

Lengths in **BOLD** only meet the US National Electrical Code ampacity requirements for individual conductors in free air or water. Lengths NOT in bold meet NEC ampacity requirements for either individual conductors or jacketed cable. See page 11 for additional details.

Table 22 Three-Phase Motor Specifications (60 Hz) 3450 rpm

TYPE	MOTOR MODEL PREFIX	RATING					FULL LOAD		MAXIMUM LOAD		LINE TO LINE RESISTANCE OHMS	EFFICIENCY %		LOCKED ROTOR AMPS	KVA CODE
		HP	KW	VOLTS	HZ	S.F.	AMPS	WATTS	AMPS	WATTS		S.F.	F.L.		
4"	234501	1/2	0.37	200	60	1.6	2.8	585	3.4	860	6.6-8.4	70	64	17.5	N
	234511			230	60	1.6	2.4	585	2.9	860	9.5-10.9	70	64	15.2	N
	234541			380	60	1.6	1.4	585	2.1	860	23.2-28.6	70	64	9.2	N
	234521			460	60	1.6	1.2	585	1.5	860	38.4-44.1	70	64	7.6	N
	234531			575	60	1.6	1.0	585	1.2	860	58.0-71.0	70	64	6.1	N
	234502	3/4	0.55	200	60	1.5	3.6	810	4.4	1150	4.6-5.9	73	69	24.6	N
	234512			230	60	1.5	3.1	810	3.8	1150	6.8-7.8	73	69	21.4	N
	234542			380	60	1.5	1.9	810	2.5	1150	16.6-20.3	73	69	13	N
	234522			460	60	1.5	1.6	810	1.9	1150	27.2-30.9	73	69	10.7	N
	234532			575	60	1.5	1.3	810	1.6	1150	41.5-50.7	73	69	8.6	N
	234503	1	0.75	200	60	1.4	4.5	1070	5.4	1440	3.8-4.5	72	70	30.9	M
	234513			230	60	1.4	3.9	1070	4.7	1440	4.9-5.6	72	70	26.9	M
	234543			380	60	1.4	2.3	1070	2.8	1440	12.2-14.9	72	70	16.3	M
	234523			460	60	1.4	2	1070	2.4	1440	19.9-23.0	72	70	13.5	M
	234533			575	60	1.4	1.6	1070	1.9	1440	30.1-36.7	72	70	10.8	M
	234504	1.5	1.1	200	60	1.3	5.8	1460	6.8	1890	2.5-3.0	76	76	38.2	K
	234514			230	60	1.3	5	1460	5.9	1890	3.2-4.0	76	76	33.2	K
	234544			380	60	1.3	3	1460	3.6	1890	8.5-10.4	76	76	20.1	K
	234524			460	60	1.3	2.5	1460	3.1	1890	13.0-16.0	76	76	16.6	K
	234534			575	60	1.3	2	1460	2.4	1890	20.3-25.0	76	76	13.3	K
	234305	2	1.5	200	60	1.25	7.7	1960	9.3	2430	1.8-2.4	76	76	50.3	K
	234315			230	60	1.25	6.7	1960	8.1	2430	2.3-3.0	76	76	45.0	K
	234345			380	60	1.25	4.1	1960	4.9	2430	6.6-8.2	76	76	26.6	K
	234325			460	60	1.25	3.4	1960	4.1	2430	9.2-12.0	76	76	22.5	K
	234335			575	60	1.25	2.7	1960	3.2	2430	14.6-18.7	76	76	17.8	K
	234306	3	2.2	200	60	1.15	10.9	2920	12.5	3360	1.3-1.7	77	77	69.5	K
	234316			230	60	1.15	9.5	2920	10.9	3360	1.8-2.2	77	77	60.3	K
	234346			380	60	1.15	5.8	2920	6.6	3360	4.7-6.0	77	77	37.5	K
	234326			460	60	1.15	4.8	2920	5.5	3360	7.2-8.8	77	77	31.0	K
	234336			575	60	1.15	3.8	2920	4.4	3360	11.4-13.9	77	77	25.1	K
	234307	5	3.7	200	60	1.15	18.3	4800	20.5	5500	.68-.83	78	78	116	K
	234317			230	60	1.15	15.9	4800	17.8	5500	.91-1.1	78	78	102	K
	234347			380	60	1.15	9.6	4800	10.8	5500	2.6-3.2	78	78	60.2	K
	234327			460	60	1.15	8.0	4800	8.9	5500	3.6-4.4	78	78	53.7	K
	234337			575	60	1.15	6.4	4800	7.1	5500	5.6-6.9	78	78	41.8	K
	234308	7.5	5.5	200	60	1.15	26.5	7150	30.5	8200	.43-.53	78	78	177	K
	234318			230	60	1.15	23.0	7150	26.4	8200	.60-.73	78	78	152	K
	234348			380	60	1.15	13.9	7150	16.0	8200	1.6-2.0	78	78	92.7	K
	234328			460	60	1.15	11.5	7150	13.2	8200	2.3-2.8	78	78	83.8	K
	234338			575	60	1.15	9.2	7150	10.6	8200	3.6-4.5	78	78	64.6	K
	234549	10	7.5	380	60	1.15	19.3	10000	21.0	11400	1.2-1.6	75	75	140	L
	234595			460	60	1.15	15.9	10000	17.3	11400	1.8-2.3	75	75	116.0	L
	234598			575	60	1.15	12.5	10000	13.6	11400	2.8-3.5	75	75	92.8	L

Table 23 Three-Phase Motor Fuse Sizing

TYPE	MOTOR MODEL PREFIX	RATING			CIRCUIT BREAKERS OR FUSE AMPS (MAXIMUM PER NEC)			CIRCUIT BREAKERS OR FUSE AMPS (TYPICAL SUBMERSIBLE)		
		HP	KW	VOLTS	STANDARD FUSE	DUAL ELEMENT TIME DELAY FUSE	CIRCUIT BREAKER	STANDARD FUSE	DUAL ELEMENT TIME DELAY FUSE	CIRCUIT BREAKER
4"	234501	1/2	0.37	200	10	5	8	10	4	15
	234511			230	8	4.5	6	8	4	15
	234541			380	5	2.5	4	5	2	15
	234521			460	4	2.25	3	4	2	15
	234531			575	3	1.8	3	3	1.4	15
	234502	3/4	0.55	200	15	7	10	12	5	15
	234512			230	10	5.6	8	10	5	15
	234542			380	6	3.5	5	6	3	15
	234522			460	5	2.8	4	5	3	15
	234532			575	4	2.5	4	4	1.8	15
	234503	1	0.75	200	15	8	15	15	6	15
	234513			230	15	7	10	12	6	15
	234543			380	8	4.5	8	8	4	15
	234523			460	6	3.5	5	6	3	15
	234533			575	5	2.8	4	5	2.5	15
	234504	1.5	1.1	200	20	12	15	20	8	15
	234514			230	15	9	15	15	8	15
	234544			380	10	5.6	8	10	4	15
	234524			460	8	4.5	8	8	4	15
	234534			575	6	3.5	5	6	3	15
	234305	2	1.5	200	25	15	20	25	11	20
	234315			230	25	12	20	25	10	20
	234345			380	15	8	15	15	6	15
	234325			460	15	6	10	11	5	15
	234335			575	10	5	8	10	4	15
	234306	3	2.2	200	35	20	30	35	15	30
	234316			230	30	17.5	25	30	12	25
	234346			380	20	12	15	20	8	15
	234326			460	15	9	15	15	6	15
	234336			575	15	7	10	11	5	15
	234307	5	3.7	200	60	35	50	60	25	50
	234317			230	50	30	40	45	20	40
	234347			380	30	17.5	25	30	12	25
	234327			460	25	15	20	25	10	20
	234337			575	20	12	20	20	8	20
	234308	7.5	5.5	200	90	50	70	80	35	70
	234318			230	80	45	60	70	30	60
	234348			380	45	25	40	40	20	40
	234328			460	40	25	30	35	15	30
	234338			575	30	17.5	25	30	12	25
	234349	10	7.5	380	70	40	60	60	25	60
	234329			460	60	30	45	50	25	45
	234339			575	45	25	35	40	20	35
	234549			380	70	35	60	60	25	60
	234595			460	60	30	45	50	25	45
	234598			575	45	25	35	40	20	35

Table 24 Three-Phase Motor Specifications (60 Hz) 3450 rpm

TYPE	MOTOR MODEL PREFIX	RATING					FULL LOAD		MAXIMUM LOAD		LINE TO LINE RESISTANCE OHMS	EFFICIENCY %		LOCKED ROTOR AMPS	KVA CODE
		HP	KW	VOLTS	HZ	S.F.	AMPS	WATTS	AMPS	WATTS		S.F.	F.L.		
6" STD.	236650	5	3.7	200	60	1.15	17.5	4700	20.0	5400	.77-.93	79	79	99	H
	236600			230	60	1.15	15	4700	17.6	5400	1.0-1.2	79	79	86	H
	236660			380	60	1.15	9.1	4700	10.7	5400	2.6-3.2	79	79	52	H
	236610			460	60	1.15	7.5	4700	8.8	5400	3.9-4.8	79	79	43	H
	236620			575	60	1.15	6	4700	7.1	5400	6.3-7.7	79	79	34	H
	236651	7.5	5.5	200	60	1.15	25.1	7000	28.3	8000	.43-.53	80	80	150	H
	236601			230	60	1.15	21.8	7000	24.6	8000	.64-.78	80	80	130	H
	236661			380	60	1.15	13.4	7000	15	8000	1.6-2.1	80	80	79	H
	236611			460	60	1.15	10.9	7000	12.3	8000	2.4-2.9	80	80	65	H
	236621			575	60	1.15	8.7	7000	9.8	8000	3.7-4.6	80	80	52	H
	236652	10	7.5	200	60	1.15	32.7	9400	37	10800	.37-.45	79	79	198	H
	236602			230	60	1.15	28.4	9400	32.2	10800	.47-.57	79	79	172	H
	236662			380	60	1.15	17.6	9400	19.6	10800	1.2-1.5	79	79	104	H
	236612			460	60	1.15	14.2	9400	16.1	10800	1.9-2.4	79	79	86	H
	236622			575	60	1.15	11.4	9400	12.9	10800	3.0-3.7	79	79	69	H
	236653	15	11	200	60	1.15	47.8	13700	54.4	15800	.24-.29	81	81	306	H
	236603			230	60	1.15	41.6	13700	47.4	15800	.28-.35	81	81	266	H
	236663			380	60	1.15	25.8	13700	28.9	15800	.77-.95	81	81	161	H
	236613			460	60	1.15	20.8	13700	23.7	15800	1.1-1.4	81	81	133	H
	236623			575	60	1.15	16.6	13700	19	15800	1.8-2.3	81	81	106	H
	236654	20	15	200	60	1.15	61.9	18100	69.7	20900	.16-.20	82	82	416	J
	236604			230	60	1.15	53.8	18100	60.6	20900	.22-.26	82	82	362	J
	236664			380	60	1.15	33	18100	37.3	20900	.55-.68	82	82	219	J
	236614			460	60	1.15	26.9	18100	30.3	20900	.8-1.0	82	82	181	J
	236624			575	60	1.15	21.5	18100	24.2	20900	1.3-1.6	82	82	145	J
	236655	25	18.5	200	60	1.15	77.1	22500	86.3	25700	.12-.15	83	83	552	J
	236605			230	60	1.15	67	22500	75	25700	.15-.19	83	83	480	J
	236665			380	60	1.15	41	22500	46	25700	.46-.56	83	83	291	J
	236615			460	60	1.15	33.5	22500	37.5	25700	.63-.77	83	83	240	J
	236625			575	60	1.15	26.8	22500	30	25700	1.0-1.3	83	83	192	J
	236656	30	22	200	60	1.15	90.9	26900	104	31100	.09-.11	83	83	653	J
	236606			230	60	1.15	79	26900	90.4	31100	.14-.17	83	83	568	J
	236666			380	60	1.15	48.8	26900	55.4	31100	.35-.43	83	83	317	J
	236616			460	60	1.15	39.5	26900	45.2	31100	.52-.64	83	83	284	J
	236626			575	60	1.15	31.6	26900	36.2	31100	.78-.95	83	83	227	J
	236667	40	30	380	60	1.15	66.5	35600	74.6	42400	.26-.33	83	83	481	J
	236617			460	60	1.15	54.9	35600	61.6	42400	.34-.42	83	83	397	J
	236627			575	60	1.15	42.8	35600	49.6	42400	.52-.64	83	83	318	H
	236668	50	37	380	60	1.15	83.5	45100	95	52200	.21-.25	82	83	501	H
	236618			460	60	1.15	67.7	45100	77	52200	.25-.32	82	83	414	H
	236628			575	60	1.15	54.2	45100	61.6	52200	.40-.49	82	83	331	H
	276668			380	60	1.15	82.4	45100	94.5	52200	.21 - .25	82	83	501	H
	276618			460	60	1.15	68.1	45100	78.1	52200	.25 - .32	82	83	414	H
	276628			575	60	1.15	54.5	45100	62.5	52200	.40 - .49	82	83	331	H
	236669	60	45	380	60	1.15	98.7	53500	111	61700	.15-.18	84	84	627	H
	236619			460	60	1.15	80.5	53500	91	61700	.22-.27	84	84	518	H
	236629			575	60	1.15	64.4	53500	72.8	61700	.35-.39	84	84	414	H
	276669			380	60	1.15	98.1	53500	111.8	61700	.15 - .18	84	84	627	H
	276619			460	60	1.15	81.0	53500	92.3	61700	.22 - .27	84	84	518	H
	276629			575	60	1.15	64.8	53500	73.9	61700	.35 - .39	84	84	414	H

Model numbers above are for three-lead motors. Six-lead motors with different model numbers have the same running performance, but when Wye connected for starting have locked rotor amps 33% of the values shown. Six-lead individual phase resistance = table X 1.5.

Table 25 6" Three-Phase Motor Specifications (60 Hz) 3450 rpm

TYPE	MOTOR MODEL PREFIX	RATING					FULL LOAD		MAXIMUM LOAD		LINE TO LINE RESISTANCE OHMS	EFFICIENCY %		LOCKED ROTOR AMPS	KVA CODE
		HP	KW	VOLTS	HZ	S.F.	AMPS	WATTS	AMPS	WATTS		S.F.	F.L.		
6" HI-TEMP 90 °C	276650	5	3.7	200	60	1.15	17.2	5200	19.8	5800	.53 - .65	73	72	124	K
	276600			230	60	1.15	15.0	5200	17.2	5800	.68 - .84	73	72	108	K
	276660			380	60	1.15	9.1	5200	10.4	5800	2.0 - 2.4	73	72	66.0	K
	276610			460	60	1.15	7.5	5200	8.6	5800	2.8 - 3.4	73	72	54.0	K
	276620			575	60	1.15	6.0	5200	6.9	5800	4.7 - 5.7	73	72	43.0	K
	276651	7.5	5.5	200	60	1.15	24.8	7400	28.3	8400	.30 - .37	77	76	193	K
	276601			230	60	1.15	21.6	7400	24.6	8400	.41 - .50	77	76	168	K
	276661			380	60	1.15	13.1	7400	14.9	8400	1.1 - 1.4	77	76	102	K
	276611			460	60	1.15	10.8	7400	12.3	8400	1.7 - 2.0	77	76	84.0	K
	276621			575	60	1.15	8.6	7400	9.9	8400	2.6 - 3.2	77	76	67.0	K
	276652	10	7.5	200	60	1.15	32.0	9400	36.3	10700	.21 - .26	80	79	274	L
	276602			230	60	1.15	27.8	9400	31.6	10700	.28 - .35	80	79	238	L
	276662			380	60	1.15	16.8	9400	19.2	10700	.80 - .98	80	79	144	L
	276612			460	60	1.15	13.9	9400	15.8	10700	1.2 - 1.4	80	79	119	L
	276622			575	60	1.15	11.1	9400	12.7	10700	1.8 - 2.2	80	79	95.0	L
	276653	15	11	200	60	1.15	48.5	14000	54.5	15900	.15 - .19	81	80	407	L
	276603			230	60	1.15	42.2	14000	47.4	15900	.19 - .24	81	80	354	L
	276663			380	60	1.15	25.5	14000	28.7	15900	.52 - .65	81	80	214	L
	276613			460	60	1.15	21.1	14000	23.7	15900	.78 - .96	81	80	177	L
	276623			575	60	1.15	16.9	14000	19.0	15900	1.2 - 1.4	81	80	142	L
	276654	20	15	200	60	1.15	64.9	18600	73.6	21300	.10 - .12	80	80	481	K
	276604			230	60	1.15	56.4	18600	64.0	21300	.14 - .18	80	80	418	K
	276664			380	60	1.15	34.1	18600	38.8	21300	.41 - .51	80	80	253	K
	276614			460	60	1.15	28.2	18600	32.0	21300	.58 - .72	80	80	209	K
	276624			575	60	1.15	22.6	18600	25.6	21300	.93 - 1.15	80	80	167	K
	276655	25	18.5	200	60	1.15	80.0	22600	90.6	25800	.09 - .11	83	82	665	L
	276605			230	60	1.15	69.6	22600	78.8	25800	.11 - .14	83	82	578	L
	276665			380	60	1.15	42.1	22600	47.7	25800	.27 - .34	83	82	350	L
	276615			460	60	1.15	34.8	22600	39.4	25800	.41 - .51	83	82	289	L
	276625			575	60	1.15	27.8	22600	31.6	25800	.70 - .86	83	82	231	L
	276656	30	22	200	60	1.15	95.0	28000	108.6	31900	.07 - .09	81	80	736	K
	276606			230	60	1.15	82.6	28000	94.4	31900	.09 - .12	81	80	640	K
	276666			380	60	1.15	50.0	28000	57.2	31900	.23 - .29	81	80	387	K
	276616			460	60	1.15	41.3	28000	47.2	31900	.34 - .42	81	80	320	K
	276626			575	60	1.15	33.0	28000	37.8	31900	.52 - .65	81	80	256	K
	276667	40	30	380	60	1.15	67.2	35900	76.0	42400	.18 - .23	84	83	545	L
	276617			460	60	1.15	55.4	35900	62.8	42400	.23 - .29	84	83	450	L
	276627			575	60	1.15	45.2	35900	50.2	42400	.34 - .43	84	83	360	L

Model numbers above are for three-lead motors. Six-lead motors with different model numbers have the same running performance, but when Wye connected for starting have locked rotor amps 33% of the values shown. Six-lead individual phase resistance = table X 1.5.

Table 26 Three-Phase Motor Fuse Sizing

TYPE	MOTOR MODEL PREFIX		RATING			CIRCUIT BREAKERS OR FUSE AMPS (MAXIMUM PER NEC)			CIRCUIT BREAKERS OR FUSE AMPS (TYPICAL SUBMERSIBLE)		
			HP	KW	VOLTS	STANDARD FUSE	DUAL ELEMENT TIME DELAY FUSE	CIRCUIT BREAKER	STANDARD FUSE	DUAL ELEMENT TIME DELAY FUSE	CIRCUIT BREAKER
6" STD. & HI-TEMP	236650	276650	5	3.7	200	60	35	45	50	25	45
	236600	276600			230	45	30	40	45	20	40
	236660	276660			380	30	17.5	25	30	12	25
	236610	276610			460	25	15	20	25	10	20
	236620	276620			575	20	12	15	20	8	15
	236651	276651	7.5	5.5	200	80	45	70	80	35	70
	236601	276601			230	70	40	60	70	30	60
	236661	276661			380	45	25	35	40	20	35
	236611	276611			460	35	20	30	35	15	30
	236621	276621			575	30	17.5	25	25	11	25
	236652	276652	10	7.5	200	100	60	90	100	45	90
	236602	276602			230	90	50	80	90	40	80
	236662	276662			380	60	35	45	50	25	45
	236612	276612			460	45	25	40	45	20	40
	236622	276622			575	35	20	30	35	15	30
	236653	276653	15	11	200	150	90	125	150	60	125
	236603	276603			230	150	80	110	125	60	110
	236663	276663			380	80	50	70	80	35	70
	236613	276613			460	70	40	60	60	30	60
	236623	276623			575	60	30	45	50	25	45
	236654	276654	20	15	200	200	110	175	175	80	175
	236604	276604			230	175	100	150	175	70	150
	236664	276664			380	100	60	90	100	45	90
	236614	276614			460	90	50	70	80	35	70
	236624	276624			575	70	40	60	70	30	60
	236655	276655	25	18.5	200	250	150	200	225	100	200
	236605	276605			230	225	125	175	200	90	175
	236665	276665			380	125	80	110	125	50	110
	236615	276615			460	110	60	90	100	45	90
	236625	276625			575	90	50	70	80	35	70
	236656	276656	30	22	200	300	175	250	300	125	250
	236606	276606			230	250	150	225	250	100	200
	236666	276666			380	150	90	125	150	60	125
	236616	276616			460	125	70	110	125	50	100
	236626	276626			575	100	60	90	100	40	80
	236667	276667	40	30	380	200	125	175	200	90	175
	236617	276617			460	175	100	150	175	70	150
	236627	276627			575	150	80	110	125	60	110
	236668	276668	50	37	380	250	150	225	250	110	225
	236618	276618			460	225	125	175	200	90	175
	236628	276628			575	175	100	150	175	70	150
	236669	276669	60	45	380	300	175	250	300	125	250
	236619	276619			460	250	150	225	250	100	225
	236629	276629			575	200	125	175	200	80	175

Table 27 Three-Phase Motor Specifications (60 Hz) 3525 rpm

TYPE	MOTOR MODEL PREFIX	RATING					FULL LOAD		MAXIMUM LOAD		LINE TO LINE RESISTANCE OHMS	EFFICIENCY %		LOCKED ROTOR AMPS	KVA CODE
		HP	KW	VOLTS	HZ	S.F.	AMPS	KILOWATTS	AMPS	KILOWATTS		S.F.	F.L.		
8" STD.	239660	40	30	380	60	1.15	64	35	72	40	.16-.20	86	86	479	J
	239600			460	60	1.15	53	35	60	40	.24-.30	86	86	396	J
	239610			575	60	1.15	42	35	48	40	.39-.49	86	86	317	J
	239661	50	37	380	60	1.15	79	43	88	49	.12-.16	87	87	656	K
	239601			460	60	1.15	64	43	73	49	.18-.22	87	87	542	K
	239611			575	60	1.15	51	43	59	49	.28-.34	87	87	434	K
	239662	60	45	380	60	1.15	92	52	104	60	.09-.11	88	87	797	K
	239602			460	60	1.15	76	52	86	60	.14-.17	88	87	658	K
	239612			575	60	1.15	61	52	69	60	.22-.28	88	87	526	K
	239663	75	55	380	60	1.15	114	64	130	73.5	.06-.09	88	88	1046	L
	239603			460	60	1.15	94	64	107	73.5	.10-.13	88	88	864	L
	239613			575	60	1.15	76	64	86	73.5	.16-.21	88	88	691	L
	239664	100	75	380	60	1.15	153	85	172	97.5	.05-.06	89	89	1466	L
	239604			460	60	1.15	126	85	142	97.5	.07-.09	89	89	1211	L
	239614			575	60	1.15	101	85	114	97.5	.11-.13	89	89	969	L
	239165	125	93	380	60	1.15	202	109	228	125	.03-.04	87	86	1596	K
	239105			460	60	1.15	167	109	188	125	.05-.07	87	86	1318	K
	239115			575	60	1.15	134	109	151	125	.08-.11	87	86	1054	K
	239166	150	110	380	60	1.15	235	128	266	146	.02-.03	88	87	1961	K
	239106			460	60	1.15	194	128	219	146	.04-.05	88	87	1620	K
	239116			575	60	1.15	155	128	176	146	.06-.08	88	87	1296	K
	239167	175	130	380	60	1.15	265	150	302	173	.02-.04	88	88	1991	J
	239107			460	60	1.15	219	150	249	173	.04-.05	88	88	1645	J
	239117			575	60	1.15	175	150	200	173	.06-.08	88	88	1316	J
	239168	200	150	380	60	1.15	298	169	342	194	.02-.03	88	88	2270	J
	239108			460	60	1.15	246	169	282	194	.03-.05	88	88	1875	J
	239118			575	60	1.15	197	169	226	194	.05-.07	88	88	1500	J

Table 27A 8" Three-Phase Motor Specifications (60 Hz) 3525 rpm

TYPE	MOTOR MODEL PREFIX	RATING					FULL LOAD		MAXIMUM LOAD		LINE TO LINE RESISTANCE OHMS	EFFICIENCY %		LOCKED ROTOR AMPS	KVA CODE
		HP	KW	VOLTS	HZ	S.F.	AMPS	KILOWATTS	AMPS	KILOWATTS		S.F.	F.L.		
8" HI-TEMP	279160	40	30	380	60	1.15	69.6	38	78.7	43	.11 - .14	79	78	616	M
	279100			460	60	1.15	57.5	38	65.0	43	.16 - .19	79	78	509	M
	279110			575	60	1.15	46.0	38	52.0	43	.25 - .31	79	78	407	M
	279161	50	37	380	60	1.15	84.3	47	95.4	53	.07 - .09	81	80	832	M
	279101			460	60	1.15	69.6	47	78.8	53	.11 - .14	81	80	687	M
	279111			575	60	1.15	55.7	47	63.0	53	.18 - .22	81	80	550	M
	279162	60	45	380	60	1.15	98.4	55	112	62	.06 - .07	83	82	1081	N
	279102			460	60	1.15	81.3	55	92.1	62	.09 - .11	83	82	893	N
	279112			575	60	1.15	65.0	55	73.7	62	.13 - .16	83	82	715	N
	279163	75	56	380	60	1.15	125	68	141	77	.05 - .06	83	82	1175	L
	279103			460	60	1.15	100	68	114	77	.07 - .09	83	82	922	L
	279113			575	60	1.15	80	68	92	77	.11 - .14	83	82	738	L
	279164	100	75	380	60	1.15	159	88	181	100	.04 - .05	86	85	1508	M
	279104			460	60	1.15	131	88	149	100	.05 - .07	86	85	1246	M
	279114			575	60	1.15	105	88	119	100	.08 - .10	86	85	997	M
	279165	125	93	380	60	1.15	195	109	223	125	.03 - .04	86	85	1793	L
	279105			460	60	1.15	161	109	184	125	.04 - .06	86	85	1481	L
	279115			575	60	1.15	129	109	148	125	.07 - .09	86	85	1185	L
	279166	150	110	380	60	1.15	235	133	269	151	.02 - .03	85	84	2012	K
	279106			460	60	1.15	194	133	222	151	.03 - .05	85	84	1662	K
	279116			575	60	1.15	155	133	178	151	.05 - .07	85	84	1330	K

Model numbers above are for three-lead motors. Six-lead motors with different model numbers have the same running performance, but when Wye connected for starting have locked rotor amps 33% of the values shown. Six-lead individual phase resistance = table X 1.5.

Table 28 Three-Phase Motor Fuse Sizing

TYPE	MOTOR MODEL PREFIX	RATING			CIRCUIT BREAKERS OR FUSE AMPS (MAXIMUM PER NEC)			CIRCUIT BREAKERS OR FUSE AMPS (TYPICAL SUBMERSIBLE)		
		HP	KW	VOLTS	STANDARD FUSE	DUAL ELEMENT TIME DELAY FUSE	CIRCUIT BREAKER	STANDARD FUSE	DUAL ELEMENT TIME DELAY FUSE	CIRCUIT BREAKER
8" STD.	239660	40	30	380	200	125	175	200	80	175
	239600			460	175	100	150	175	70	150
	239610			575	150	80	110	125	60	110
	239661	50	37	380	250	150	200	225	100	200
	239601			460	200	125	175	200	80	175
	239611			575	175	90	150	150	70	150
	239662	60	45	380	300	175	250	300	125	250
	239602			460	250	150	200	225	100	200
	239612			575	200	110	175	175	80	175
	239663	75	55	380	350	200	300	350	150	300
	239603			460	300	175	250	300	125	250
	239613			575	250	150	200	225	100	200
	239664	100	75	380	500	275	400	450	200	400
	239604			460	400	225	350	400	175	350
	239614			575	350	200	300	300	125	300
	239165	125	93	380	700	400	600	600	250	600
	239105			460	500	300	450	500	225	450
	239115			575	450	250	350	400	175	350
	239166	150	110	380	800	450	600	700	300	600
	239106			460	600	350	500	600	250	500
	239116			575	500	300	400	450	200	400
	239167	175	130	380	800	500	700	800	350	700
	239107			460	700	400	600	700	300	600
	239117			575	600	350	450	600	225	450
	239168	200	150	380	1000	600	800	1000	400	800
	239108			460	800	450	700	800	350	700
	239118			575	600	350	500	600	250	500

Table 28A 8" Three-Phase Motor Fuse Sizing

TYPE	MOTOR MODEL PREFIX	RATING			CIRCUIT BREAKERS OR FUSE AMPS (MAXIMUM PER NEC)			CIRCUIT BREAKERS OR FUSE AMPS (TYPICAL SUBMERSIBLE)		
		HP	KW	VOLTS	STANDARD FUSE	DUAL ELEMENT TIME DELAY FUSE	CIRCUIT BREAKER	STANDARD FUSE	DUAL ELEMENT TIME DELAY FUSE	CIRCUIT BREAKER
8" HI-TEMP	279160	40	30	380	225	125	175	200	90	175
	279100			460	175	110	150	175	70	150
	279110			575	150	90	125	125	60	125
	279161	50	37	380	250	150	225	225	110	225
	279101			460	200	125	175	200	90	175
	279111			575	175	100	150	150	70	150
	279162	60	45	380	300	175	250	300	125	250
	279102			460	275	150	225	250	100	225
	279112			575	200	125	175	175	80	175
	279163	75	56	380	400	200	350	350	150	350
	279103			460	300	175	275	300	125	275
	279113			575	275	150	225	225	100	225
	279164	100	75	380	500	300	450	450	200	450
	279104			460	400	250	350	400	175	350
	279114			575	350	200	300	300	125	300
	279165	125	93	380	700	400	600	600	250	600
	279105			460	500	300	450	500	225	450
	279115			575	450	250	350	400	175	350
	279166	150	110	380	800	450	600	700	300	600
	279106			460	600	350	500	600	250	500
	279116			575	500	300	400	450	200	400

Overload Protection of Three-Phase Submersible Motors Class 10 Protection Required

The characteristics of submersible motors are different than standard motors and special overload protection is required.

If the motor is locked, the overload protection must trip within 10 seconds to protect the motor windings. Subtrol/SubMonitor, a Franklin-approved adjustable overload relay, or a Franklin-approved fixed heater must be used.

Fixed heater overloads must be the ambient-compensated quick-trip type to maintain protection at high and low air temperatures.

All heaters and amp settings shown are based on total line amps. When determining amperage settings or making heater selections for a six-lead motor with a Wye-Delta starter, divide motor amps by 1.732.

Pages 29, 30 and 31 list the correct selection and settings for some manufacturers. Approval for other manufacturers' types not listed may be requested by calling Franklin's Submersible Service Hotline at 800-348-2420.

Refer to notes on page 30.

Table 29 - 60 Hz 4" Motors

HP	KW	VOLTS	NEMA STARTER SIZE	HEATERS FOR OVERLOAD RELAYS		ADJUSTABLE RELAYS (NOTE 3)	
				FURNAS (NOTE 1)	G.E. (NOTE 2)	SET	MAX.
1/2	0.37	200	00	K31	L380A	3.2	3.4
		230	00	K28	L343A	2.7	2.9
		380	00	K22	L211A	1.7	1.8
		460	00	-	L174A	1.4	1.5
		575	00	-	-	1.2	1.3
3/4	0.55	200	00	K34	L510A	4.1	4.4
		230	00	K32	L420A	3.5	3.8
		380	00	K27	L282A	2.3	2.5
		460	00	K23	L211A	1.8	1.9
		575	00	K21	L193A	1.5	1.6
1	0.75	200	00	K37	L618A	5.0	5.4
		230	00	K36	L561A	4.4	4.7
		380	00	K28	L310A	2.6	2.8
		460	00	K26	L282A	2.2	2.4
		575	00	K23	L211A	1.8	1.9
1.5	1.1	200	00	K42	L750A	6.3	6.8
		230	00	K39	L680A	5.5	5.9
		380	00	K32	L420A	3.3	3.6
		460	00	K29	L343A	2.8	3.0
		575	00	K26	L282A	2.2	2.4
2	1.5	200	0	K50	L111B	8.6	9.3
		230	0	K49	L910A	7.5	8.1
		380	0	K36	L561A	4.6	4.9
		460	00	K33	L463A	3.8	4.1
		575	00	K29	L380A	3.0	3.2
3	2.2	200	0	K55	L147B	11.6	12.5
		230	0	K52	L122B	10.1	10.9
		380	0	K41	L750A	6.1	6.6
		460	0	K37	L618A	5.1	5.5
		575	0	K34	L510A	4.1	4.4
5	3.7	200	1	K62	L241B	19.1	20.5
		230	1	K61	L199B	16.6	17.8
		380	0	K52	L122B	10.0	10.8
		460	0	K49	L100B	8.3	8.9
		575	0	K42	L825A	6.6	7.1
7.5	5.5	200	1	K68	L332B	28.4	30.5
		230	1	K67	L293B	24.6	26.4
		380	1	K58	L181B	14.9	16.0
		460	1	K55	L147B	12.3	13.2
		575	1	K52	L122B	9.9	10.6
10	7.5	380	1	K62	L241B	19.5	21.0
		460	1	K60	L199B	16.1	17.3
		575	1	K56	L165B	12.9	13.6

Table 30 - 60 Hz 6" Standard & Hi-Temp Motors

HP	KW	VOLTS	NEMA STARTER SIZE	HEATERS FOR OVERLOAD RELAYS		ADJUSTABLE RELAYS (NOTE 3)	
				FURNAS (NOTE 1)	G.E. (NOTE 2)	SET	MAX.
5	3.7	200	1	K61	L220B	17.6	19.1
		230	1	K61	L199B	15.4	16.6
		380	0	K52	L122B	9.4	10.1
		460	0	K49	L100B	7.7	8.3
		575	0	K42	L825A	6.1	6.6
7.5	5.5	200	1	K67	L322B	26.3	28.3
		230	1	K64	L293B	22.9	24.6
		380	1	K57	L165B	13.9	14.9
		460	1	K54	L147B	11.4	12.3
		575	1	K52	L111B	9.1	9.8
10	7.5	200	2(1)	K72	L426B	34.4	37.0
		230	2(1)	K70	L390B	29.9	32.2
		380	1	K61	L220B	18.1	19.5
		460	1	K58	L181B	15.0	16.1
		575	1	K55	L147B	12.0	12.9
15	11	200	3(1)	K76	L650B	50.7	54.5
		230	2	K75	L520B	44.1	47.4
		380	2(1)	K68	L322B	26.7	28.7
		460	2(1)	K64	L265B	22.0	23.7
		575	2(1)	K61	L220B	17.7	19.0
20	15	200	3	K78	L787B	64.8	69.7
		230	3(1)	K77	L710B	56.4	60.6
		380	2	K72	L426B	34.1	36.7
		460	2	K69	L352B	28.2	30.3
		575	2	K64	L393B	22.7	24.4
25	18.5	200	3	K86	L107C	80.3	86.3
		230	3	K83	L866B	69.8	75.0
		380	2	K74	L520B	42.2	45.4
		460	2	K72	L426B	34.9	37.5
		575	2	K69	L352B	27.9	30.0
30	22	200	4(1)	K88	L126C	96.7	104.0
		230	3	K87	L107C	84.1	90.4
		380	3(1)	K76	L650B	50.9	54.7
		460	3(1)	K74	L520B	42.0	45.2
		575	3(1)	K72	L390B	33.7	36.2
40	30	380	3	K83	L866B	69.8	75.0
		460	3	K77	L710B	57.7	62.0
		575	3	K74	L593B	46.1	49.6
50	37	380	3	K87	L107C	86.7	93.2
		460	3	K83	L950B	71.6	77.0
		575	3	K77	L710B	57.3	61.6
60	45	380	4(1)	K89	L126C	102.5	110.2
		460	4(1)	K87	L107C	84.6	91.0
		575	4(1)	K78	L866B	67.7	72.8

Footnotes for Tables 29, 30, and 31

NOTE 1: Furnas intermediate sizes between NEMA starter sizes apply where (1) is shown in tables, size 1.75 replacing 2, 2.5 replacing 3, 3.5 replacing 4, and 4.5 replacing 5. Heaters were selected from Catalog 294, table 332 and table 632 (starter size 00, size B). Size 4 starters are heater type 4 (JG). Starters using these heater tables include classes 14, 17 and 18 (inNOVA), classes 36 and 37 (reduced voltage), and classes 87, 88 and 89 (pump and motor control centers). Overload relay adjustments should be set no higher than 100% unless necessary to stop nuisance tripping with measured amps in all lines below nameplate maximum. Heater selections for class 16 starters (Magnetic Definite Purpose) will be furnished upon request.

NOTE 2: General Electric heaters are type CR123 usable only on type CR124 overload relays and were selected from Catalog GEP-126OJ, page 184. Adjustment should be set no higher than 100%, unless necessary to stop nuisance tripping with measured amps in all lines below nameplate maximum.

NOTE 3: Adjustable overload relay amp settings apply to approved types listed. Relay adjustment should be set at the specified SET amps. Only if tripping occurs with amps in all lines measured to be within nameplate maximum amps should the setting be increased, not to exceed the MAX value shown.

NOTE 4: Heaters shown for ratings requiring NEMA size 5 or 6 starters are all used with current transformers per manufacturer standards. Adjustable relays may or may not use current transformers depending on design.

Table 31 - 60 Hz 8" Motors

MOTOR MODEL PREFIX	HP	KW	VOLTS	NEMA STARTER SIZE	HEATERS FOR OVERLOAD RELAYS		ADJUSTABLE RELAYS (NOTE 3)	
					FURNAS (NOTE 1)	G.E. (NOTE 2)	SET	MAX.
239660	40	30	380	3	K78	L866B	68	73
239600			460	3	K77	L710B	56	60
239610			575	3	K73	L520B	45	48
239661	50	37	380	3	K86	L107C	81	87
239601			460	3	K78	L866B	68	73
239611			575	3	K77	L710B	56	60
239662	60	45	380	4(1)	K89	L126C	101	108
239602			460	4(1)	K86	L107C	83	89
239612			575	4(1)	K78	L787B	64	69
239663	75	55	380	4	K92	L142C	121	130
239603			460	4(1)	K89	L126C	100	107
239613			575	4(1)	K85	L950C	79	85
239664	100	75	380	5(1)	K28	L100B	168	181
239604			460	4	K92	L155C	134	144
239614			575	4	K90	L142C	108	116
239165	125	93	380	5	K32	L135B	207	223
239105			460	5(1)	K29	L111B	176	189
239115			575	5(1)	K26	L825A	140	150
239166	150	110	380	5	-	L147B	248	267
239106			460	5(1)	K32	L122B	206	221
239116			575	5(1)	K28	L100B	165	177
239167	175	130	380	6	K26	-	270	290
239107			460	5	K33	L147B	233	250
239117			575	5	K31	L111B	186	200
239168	200	150	380	6	K27	-	316	340
239108			460	5	K33	L165B	266	286
239118			575	5	K32	L135B	213	229

Table 31A - 60 Hz 8" Hi-Temp 75°C Motors

MOTOR MODEL PREFIX	HP	KW	VOLTS	NEMA STARTER SIZE	HEATERS FOR OVERLOAD RELAYS		ADJUSTABLE RELAYS (NOTE 3)	
					FURNAS (NOTE 1)	G.E. (NOTE 2)	SET	MAX.
279160	40	30	380	3	K83	L866B	73	79
279100			460	3	K77	L710B	60	65
279110			575	3	K74	L593B	48	52
279161	50	37	380	3	K87	L107C	89	95
279101			460	3	K83	L866B	73	79
279111			575	3	K77	L710B	59	63
279162	60	45	380	4(1)	K89	L126C	104	112
279102			460	4(1)	K87	L107C	86	92
279112			575	4(1)	K78	L866B	69	74
279163	75	56	380	4	K92	L155C	131	141
279103			460	4(1)	K89	L126C	106	114
279113			575	4(1)	K87	L950C	86	92
279164	100	75	380	5(1)	K28	L100B	168	181
279104			460	5(1)	K26	L825A	139	149
279114			575	4	K90	L142C	111	119
279165	125	93	380	5	K32	L135B	207	223
279105			460	5(1)	K29	L111B	171	184
279115			575	5(1)	K26	L825A	138	148
279166	150	110	380	5	-	L147B	250	269
279106			460	5(1)	K32	L122B	206	222
279116			575	5(1)	K28	L100B	166	178

Note: Other relay types from these and other manufacturers may or may not provide acceptable protection, and they should not be used without approval of Franklin Electric.

Some approved types may only be available for part of the listed motor ratings. When relays are used with current transformers, relay setting is the specified amps divided by the transformer ratio.

Recommended Adjustable Overload Relays

Advance Controls: MDR3 Overload

AEG Series: B17S, B27S, B27-2

ABB Type: RVH 40, RVH65, RVP160, T25DU, T25CT, TA25DU

AGUT: MT03, R1K1, R1L0, R1L3, TE set Class 5

Allen Bradley: Bulletin 193, SMP-Class 10 only

Automatic Switch Types: DQ, LR1-D, LR1-F, LR2 Class 10

Benshaw: RSD6 (Class 10) Soft Start

Bharita C-H: MC 305 ANA 3

Clipsal: 6CTR, 6MTR

Cutler-Hammer: C316F, C316P, C316S, C310-set at 6 sec max, Advantage Class10

Fanal Types: K7 or K7D through K400

Franklin Electric: Subtrol-Plus, SubMonitor

Fuji Types: TR-OQ, TR-OQH, TR-2NQ, TR- 3NQ, TR-4NQ, TR-6NQ, RCa 3737-ICQ & ICQH

Furnas Types: US15 48AG & 48BG, 958L, ESP100-Class 10 only, 3RB10-Class 10

General Electric: CR4G, CR7G, RT*1, RT*2, RTF3, RT*4, CR324X-Class 10 only

Kasuga: RU Set Operating Time Code = 10 & time setting 6 sec max

Klockner-Moeller Types: ZOO, Z1, Z4, PKZM1, PKZM3 & PKZ2

Lovato: RC9, RC22, RC80, RF9, RF25 & RF95

Matsushita: FKT-15N, 15GN, 15E, 15GE, FT-15N, FHT-15N

Mitsubishi: ET, TH-K12ABKP, TH-K20KF, TH-K20KP, TH-K20TAKF, TH-K60KF, TH-K60TAKF

Omron: K2CM Set Operating Timing Code = 10 & time setting 6 sec max, SE-KP24E time setting 6 sec max

Riken: PM1, PM3

Samwha: EOCRS Set for Class 5, EOCR-ST, EOCR-SE, EOCR-AT time setting 6 sec max

Siemens Types: 3UA50, -52, -54, -55, -58, -59, -60, -61, -62, -66, -68, -70, 3VUI3, 3VE, 3UB (Class 5)

Sprecher and Schuh Types: CT, CT1, CTA 1, CT3K, CT3-12 thru CT3-42, KTA3, CEF1 & CET3 set at 6 sec max, CEP 7 Class 10, CT4, 6, & 7, CT3, KT7

Square D/Telemecanique: Class 9065 Types: TD, TE, TF, TG, TJ, TK, TR, TJE &TJF (Class 10), LR1-D, LR1-F, LR2 Class 10, Types 18A, 32A, SS-Class 10, SR-Class 10 and 63-A-LB Series. Integral 18,32,63, GV2-L, GV2-M, GV2-P, GV3-M (1.6-10 amp only) LR9D, SF Class 10, ST Class 10, LT6 (Class 5 or 10), LRD (Class 10), Motor Logic (Class10)

Toshiba Type: 2E RC820, set at 8 sec max.

WEG: RW2

Westinghouse Types: FT13, FT23, FT33, FT43, K7D, K27D, K67D, Advantage (Class 10), MOR, IQ500 (Class 5)

Westmaster: OLWROO and OLWTOO suffix D thru P

SUBMERSIBLE PUMP
Installation Check List

1. Motor Inspection

- ☐ A. Verify that the model, hp or kW, voltage, phase and hertz on the motor nameplate match the installation requirements.
- ☐ B. Check that the motor lead assembly is not damaged.
- ☐ C. Measure insulation resistance using a 500 or 1000 volt DC megohmmeter from each lead wire to the motor frame. Resistance should be at least 200 megohms without drop cable.
- ☐ D. Keep a record of motor model number, hp or kW, voltage, and serial number (S/N). (S/N is stamped in shell above the nameplate. A typical example, S/N 07A18 01-0123)

2. Pump Inspection

- ☐ A. Check that the pump rating matches the motor.
- ☐ B. Check for pump damage and verify that the pump shaft turns freely.

3. Pump/Motor Assembly

- ☐ A. If not yet assembled, check that pump and motor mounting faces are free from dirt, debris and uneven paint thickness.
- ☐ B. Pumps and motors over 5 hp should be assembled in the vertical position to prevent stress on pump brackets and shafts. Assemble the pump and motor together so their mounting faces are in contact and then tighten assembly bolts or nuts evenly to manufacturer specifications.
- ☐ C. If accessible, check that the pump shaft turns freely.
- ☐ D. Assemble the pump lead guard over the motor leads. Do not cut or pinch lead wires during assembly or installation.

4. Power Supply and Controls

- ☐ A. Verify that the power supply voltage, Hertz, and kVA capacity match motor requirements.
- ☐ B. Verify control box hp and voltage matches motor (3-wire only).
- ☐ C. Check that the electrical installation and controls meet all safety regulations and match the motor requirements, including fuse or circuit breaker size and motor overload protection. Connect all metal plumbing and electrical enclosures to the power supply ground to prevent shock hazard. Comply with national and local codes.

5. Lightning and Surge Protection

- ☐ A. Use properly rated surge (lightning) arrestors on all submersible pump installations. Motors 5 hp and smaller, which are marked “Equipped with Lightning Arrestors”, contain internal arrestors.
- ☐ B. Ground all above ground arrestors with copper wire directly to the motor frame, or to metal drop pipe or casing which reaches below the well pumping level. Connecting to a ground rod does not provide good surge protection.

6. Electrical Drop Cable

- ☐ A. Use submersible cable sized in accordance with local regulations and the cable charts. See pages 11 and 16-21. Ground motor per national and local codes.
- ☐ B. Include a ground wire to the motor and surge protection, connected to the power supply ground if required by codes. Always ground any pump operated outside a drilled well.

7. Motor Cooling

- ☐ A. Ensure at all times that the installation provides adequate motor cooling; see page 6 for details.

 © 2009 Franklin Electric Co., Inc.

SUBMERSIBLE PUMP
Installation Check List

8. Pump/Motor Installation

- ☐ A. Splice motor leads to supply cable using electrical grade solder or compression connectors, and carefully insulate each splice with watertight tape or adhesive-lined shrink tubing, as shown in motor or pump installation data.
- ☐ B. Support the cable to the delivery pipe every 10 feet (3 meters) with straps or tape strong enough to prevent sagging. Use padding between cable and any metal straps.
- ☐ C. A check valve in the delivery pipe is recommended. More than one check valve may be required, depending on valve rating and pump setting; see page 5 for details.
- ☐ D. Assemble all pipe joints as tightly as practical, to prevent unscrewing from motor torque. Torque should be at least 10 pound feet per hp (2 meter-KG per kW).
- ☐ E. Set the pump far enough below the lowest pumping level to assure the pump inlet will always have at least the Net Positive Suction Head (NPSH) specified by the pump manufacturer. Pump should be at least 10 feet (3 meters) from the bottom of the well to allow for sediment build up.
- ☐ F. Check insulation resistance as pump/motor assembly is lowered into the well. Resistance may drop gradually as more cable enters the water, but any sudden drop indicates possible cable, splice or motor lead damage; see page 45.

9. After Installation

- ☐ A. Check all electrical and water line connections and parts before starting the pump.
- ☐ B. Start the pump and check motor amps and pump delivery. If normal, continue to run the pump until delivery is clear. If three-phase pump delivery is low, it may be running backward. Rotation may be reversed (with power off) by interchanging any two motor lead connections to the power supply.
- ☐ C. Check three-phase motors for current balance within 5% of average, using motor manufacturer instructions Imbalance over 5% will cause higher motor temperatures and may cause overload trip, vibration, and reduced life.
- ☐ D. Verify that starting, running and stopping cause no significant vibration or hydraulic shocks.
- ☐ E. After at least 15 minutes running time, verify that pump output, electrical input, pumping level, and other characteristics are stable and as specified.

Date _____ Filled In By _____

Notes _____

_____

_____

_____

_____

_____

 © 2009 Franklin Electric Co., Inc.

Franklin Electric

SUBMERSIBLE MOTOR INSTALLATION RECORD
Form 2207 - Page 1

RMA Number

KEY DEALER #

DISTRIBUTOR	INSTALLER	END USER
Name:	Name:	Name:
City:	City:	City:
State: Zip:	State: Zip:	State: Zip:

Well ID or GPS: _____ _____ _____ Water Temperature: _____ ☐ °F ☐ °C

Application/Water Use (e.g. potable water, irrigation, municipal, fountain, etc.): _____

Date Installed (mm/yy): _____ Date Failed (mm/yy): _____ Motor Position Shaft-Up: ☐ Yes ☐ No

Operating Cycle: ON Time Per Start _____ ☐ Hrs. ☐ Mins. Time OFF Between Stop & Restart _____ ☐ Hrs. ☐ Mins.

MOTOR

Model: _____ Serial Number: _____ Date Code (if updated): _____

MOTOR OVERLOAD

System Typical Operating Current: _____ Amps @ _____ Volts

Overload: ☐ FE SubMonitor Input Amps _____ D3 Attached ☐ Yes ☐ No Fault Settings Attached ☐ Yes ☐ No

☐ Other Manufacturer Model: _____ Dial Set at: _____ or Heater# _____

NEMA Class: ☐ 10 ☐ 20 ☐ 30 Ambient Compensated: ☐ Yes ☐ No

Power to Motor by: ☐ Full Volt Starter ☐ VFD ☐ Soft Starter VFD or Soft Starter Mfr. & Model: _____

PUMP

Manufacturer: _____

Model: _____

Stages: _____

Design Rating: _____ gpm @ _____ ft TDH

Horsepower Required by Pump End: _____

Actual Pump Delivery: _____ gpm @ _____ psi

What Controls When System Runs & Stops:

_____

(e.g. pressure, level, flow, manual on/off, timer, time clock etc.)

WELL DATA (All measurements from well head down.)

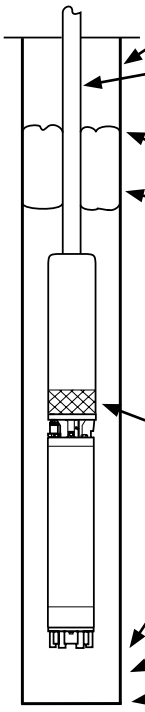

Casing Diameter _____ in

Drop Pipe Diameter _____ in

Number of Sticks of Drop Pipe _____

Static Water Level _____ ft

Drawdown (pumping) Water Level _____ ft

Spring Assist Check Valves:
(Measured from Well Head Down)

#1 _____ #2 _____ #3 _____ #4 _____ ft

☐ Solid ☐ Drilled Poppet ☐ Break-Off Plug

Pump Inlet Setting _____ ft

Flow Sleeve ☐ No ☐ Yes, Dia. _____ in

Case Ends _____ ft

☐ Well Screen ☐ Perforated Casing

#1 from ____ to ____ ft & #2 from ____ to ____ ft

Well Depth _____ ft

YOUR NAME / DATE

_____ / _____

 © 2009 Franklin Electric Co., Inc.

Franklin Electric

SUBMERSIBLE MOTOR INSTALLATION RECORD
Form 2207 - Page 2

RMA Number

TRANSFORMERS

Number of Transformers: ☐ Two ☐ Three Transformers Supply Motor Only: ☐ Yes ☐ No ☐ Unsure

Transformer #1: _____ kVA Transformer #2: _____ kVA Transformer #3: _____ kVA

POWER CABLES & GROUND WIRE

1 **Service Entrance to Pump Control Panel:**

Length: _____ ft. & Gauge: _____ AWG/MCM

Material: ☐ Copper ☐ Aluminum Construction: ☐ Jacketed ☐ Individual Conductors ☐ Web ☐ Twisted

Temperature Rating of Cable: ☐ 60C ☐ 75C ☐ 90C ☐ 125C or Insulation Type: _____ (e.g. THHN)

2 **Pump Control Panel to Motor:**

Length: _____ ft. & Gauge: _____ AWG/MCM

Material: ☐ Copper ☐ Aluminum Construction: ☐ Jacketed ☐ Individual Conductors ☐ Web ☐ Twisted

Temperature Rating of Cable: ☐ 60C ☐ 75C ☐ 90C ☐ 125C or Insulation Type: _____ (e.g. THHN)

3 **Ground Wire Size:** From Control Panel to Motor: _____ AWG/MCM

Control Grounded to (mark all that apply):

☐ Well Head ☐ Metal Casing ☐ Motor ☐ Driven Rod ☐ Power Supply

INCOMING VOLTAGE

No Load L1-L2 _____ L2-L3 _____ L1-L3 _____

Full Load L1-L2 _____ L2-L3 _____ L1-L3 _____

RUNNING AMPS & CURRENT BALANCE

Full Load L1 _____ L2 _____ L3 _____

% Unbalance: _____

CONTROL PANEL

1 **Pump Panel Manufacturer/Fabricator:** _____

2 **Short Circuit Protection - Fuses or Circuit Breaker**

Option #1 - Fuse

Manufacturer: _____ Model: _____ Rating: _____ Amps

Type: ☐ Time-Delay ☐ Standard

Option #2 - Circuit Breaker

Manufacturer: _____ Model: _____ Rating: _____ Amps Setting: _____

3 **Starter - Full Voltage, Reduced Voltage, Soft-Starter or VFD (Variable Frequency Drive)**

Option #1 - Full Voltage

Manufacturer: _____ Model: _____ Size: _____ Contacts: ☐ NEMA ☐ IEC

Option #2 - Reduced Voltage

Manufacturer: _____ Model: _____ Ramp Time to Full Voltage: _____ sec.

Option #3 - Soft-Starter or VFD

Manufacturer: _____ Model: _____ Max. Continuous Amp Output Rating: _____

Min. Setting: _____ Hz & GPM: _____ Max. Setting: _____ Hz & GPM: _____

Start Ramp Time to 30 Hz: _____ sec. Stop Mode: ☐ Power Off Coast ☐ 30-0 Hz Ramp _____ sec.

Special Output Filter Purchased: ☐ Yes ☐ No

Output Filter Manufacturer: _____ Model: _____ % Reactance: _____

4 **Surge Arrestor:** ☐ No ☐ Yes, Manufacturer: _____ Model: _____

 © 2009 Franklin Electric Co., Inc.

Franklin Electric

SUBMERSIBLE MOTOR

Booster Installation Record

RMA Number

Date _____ /_____/_____ Filled In By _____

INSTALLATION

Owner/User _____ Telephone (_____) _____

Address _____City _____ State _____ Zip _____

Installation Site, If Different _____

Contact _____ Telephone (_____) _____

System Application_____

_____

_____

System Manufactured By_____Model _____ Serial No. _____

System Supplied By_____ City _____ State _____ Zip _____

Is this a "HERO" system (10.0 - 10.5 PH)? ☐ Yes ☐ No

MOTOR

Model No. _____ Serial No. _____ Date Code _____

Horsepower _____ Voltage _____ ☐ Single-Phase ☐ Three-Phase Diameter _____ in.

Slinger Removed? ☐ Yes ☐ No Check Valve Plug Removed? ☐ Yes ☐ No

Motor Fill Solution ☐ Standard ☐ DI Water Model No. _____ Serial No. _____ Date Code _____

PUMP

Manufacturer _____ Model _____ Serial No. _____

Stages _____ Diameter _____ Flow Rate Of _____ gpm At _____TDH

Booster Case Internal Diameter _____ Material _____

CONTROLS AND PROTECTIVE DEVICES

SubMonitor? ☐ Yes ☐ No If Yes, Warranty Registration No._____

If Yes, Overload Set? ☐ Yes ☐ No _____ Set At _____

Underload Sets? ☐ Yes ☐ No _____ Set At _____

VFD or Reduced Voltage Starter? ☐ Yes ☐ No If Yes, Type _____

Mfr. _____Setting _____% Full Voltage In _____sec

Pump Panel? ☐ Yes ☐ No If Yes, Mfr. _____Size _____

Magnetic Starter/Contactor Mfr. _____ Model _____Size_____

Heaters Mfr. _____ No. _____ If Adjustable Set At _____

Fuses Mfr. _____ Size _____ Type _____

Lightning/Surge Arrestor Mfr. _____ Model _____

Controls Are Grounded to _____ with No. _____Wire

Inlet Pressure Control ☐ Yes ☐ No If Yes, Mfr._____ Model _____ Setting _____ psi Delay ____ sec

Inlet Flow Control ☐ Yes ☐ No If Yes, Mfr._____ Model _____ Setting _____ gpm Delay ____ sec

Outlet Pressure Control ☐ Yes ☐ No If Yes, Mfr._____ Model _____ Setting _____ psi Delay ____ sec

Outlet Flow Control ☐ Yes ☐ No If Yes, Mfr._____ Model _____ Setting _____ gpm Delay ____ sec

Water Temperature Control ☐ Yes ☐ No If Yes, Mfr._____ Model _____ Delay ____ sec

Set At _____ °F or _____ °C Located _____

 © 2009 Franklin Electric Co., Inc.

Franklin Electric

SUBMERSIBLE MOTOR
Booster Installation Record

INSULATION CHECK

Initial Megs: Motor & Lead Only Black (T1/U1)_____ Yellow (T2/V1)_____ Red (T3/W1)_____

Installed Megs: Motor, Lead, & Cable Black (T1/U1)_____ Yellow (T2/V1)_____ Red (T3/W1)_____

VOLTAGE TO MOTOR

Non-Operating: B-Y (T1/U1 - T2/V1)_____ Y-R (T2/V1 - T3/W1)_____ R-B (T3/W1 - T1/U1)_____

At Rated Flow of _____gpm B-Y (T1/U1 - T2/V1)_____ Y-R (T2/V1 - T3/W1)_____ R-B (T3/W1 - T1/U1)_____

At Open Flow _____gpm B-Y (T1/U1 - T2/V1)_____ Y-R (T2/V1 - T3/W1)_____ R-B (T3/W1 - T1/U1)_____

AMPS TO MOTOR

At Rated Flow of _____gpm Black (T1/U1)_____ Yellow (T2/V1)_____ Red (T3/W1)_____

At Open Flow _____gpm Black (T1/U1)_____ Yellow (T2/V1)_____ Red (T3/W1)_____

At Shut Off* Black (T1/U1)_____ Yellow (T2/V1)_____ Red (T3/W1)_____

*Do **NOT** run at Shut Off more than two (2) minutes.

Inlet Pressure _____psi Outlet Pressure _____psi Water Temperature _____ °F or _____ °C

If you have any questions or problems, call the Franklin Electric Toll-Free Hot Line: 1-800-348-2420

Comments: _____

_____

_____

_____

PLEASE SKETCH THE SYSTEM

 © 2009 Franklin Electric Co., Inc.

Franklin Electric

SubMonitor Three-Phase Protection

Applications

SubMonitor is designed to protect 3-phase pumps/motors with service factor amp ratings (SFA) from 5 to 350 A (approx. 3 to 200 hp). Current, voltage, and motor temperature are monitored using all three legs and allows the user to set up the SubMonitor quickly and easily.

Protects Against

- Under/Overload
- Under/Overvoltage
- Current Unbalance
- Overheated Motor
  (if equipped with Subtrol Heat Sensor)
- False Start (Chattering)
- Phase Reversal

Power Factor Correction

In some installations, power supply limitations make it necessary or desirable to increase the power factor of a submersible motor. The table lists the capacitive kVAR required to increase the power factor of large Franklin three-phase submersible motors to the approximate values shown at maximum input loading.

Capacitors must be connected on the line side of the overload relay, or overload protection will be lost.

Table 32 kVAR Required 60 Hz

MOTOR		KVAR REQUIRED FOR PF OF:		
HP	KW	0.90	0.95	1.00
5	3.7	1.2	2.1	4.0
7.5	5.5	1.7	3.1	6.0
10	7.5	1.5	3.3	7.0
15	11	2.2	4.7	10.0
20	15	1.7	5.0	12.0
25	18.5	2.1	6.2	15.0
30	22	2.5	7.4	18.0
40	30	4.5	11.0	24.0
50	37	7.1	15.0	32.0
60	45	8.4	18.0	38.0
75	55	6.3	18.0	43.0
100	75	11.0	27.0	60.0
125	93	17.0	36.0	77.0
150	110	20.0	42.0	90.0
175	130	9.6	36.0	93.0
200	150	16.0	46.0	110.0

Values listed are total required (not per phase).

Three-Phase Starter Diagrams

Three-phase combination magnetic starters have two distinct circuits: a power circuit and a control circuit.

The power circuit consists of a circuit breaker or fused line switch, contacts, and overload heaters connecting incoming power lines L1, L2, L3 and the three-phase motor.

The control circuit consists of the magnetic coil, overload contacts and a control device such as a pressure switch. When the control device contacts are closed, current flows through the magnetic contactor coil, the contacts close, and power is applied to the motor. Hand-Off-Auto switches, start timers, level controls and other control devices may also be in series in the control circuit.

Line Voltage Control

This is the most common type of control encountered. Since the coil is connected directly across the power lines L1 and L2, the coil must match the line voltage.

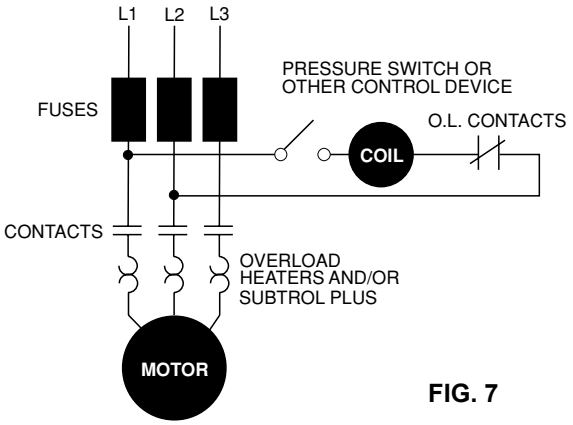

FIG. 7

Low Voltage Transformer Control

This control is used when it is desirable to operate push buttons or other control devices at some voltage lower than the motor voltage. The transformer primary must match the line voltage and the coil voltage must match the secondary voltage of the transformer.

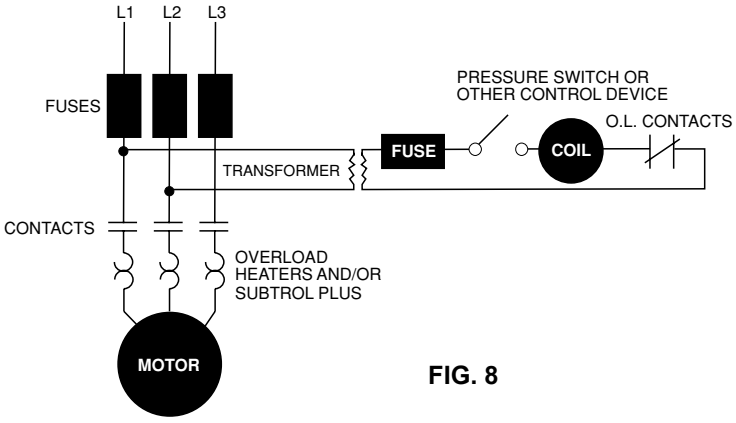

FIG. 8

External Voltage Controls

Control of a power circuit by a lower circuit voltage can also be obtained by connecting to a separate control voltage source. The coil rating must match the control voltage source, such as 115 or 24 volts.

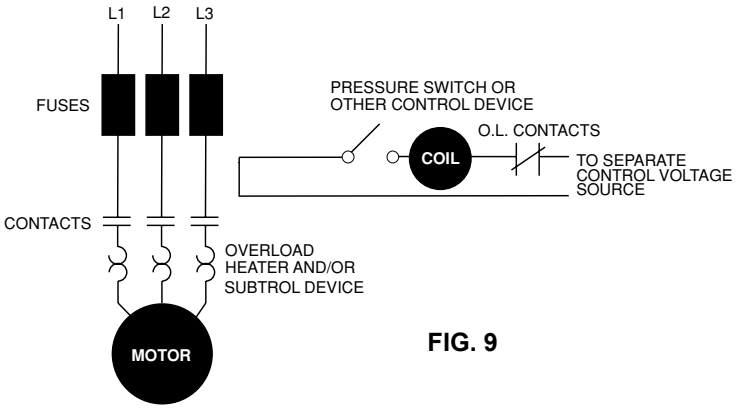

FIG. 9

Three-Phase Power Unbalance

A full three-phase supply is recommended for all three-phase motors, consisting of three individual transformers or one three-phase transformer. So-called “open” delta or Wye connections using only two transformers can be used, but are more likely to cause problems, such as poor performance, overload tripping or early motor failure due to current unbalance.

Transformer rating should be no smaller than listed in table 4 for supply power to the motor alone.

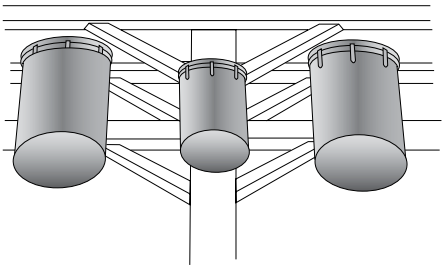

FIG. 10
FULL THREE-PHASE

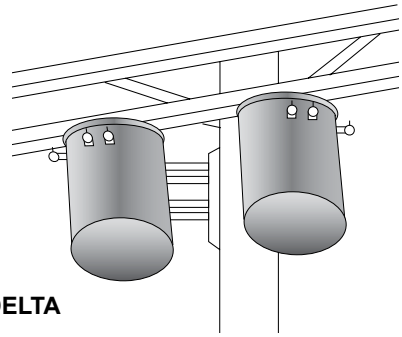

FIG. 11
OPEN DELTA

Checking and Correcting Rotation and Current Unbalance

1. Establish correct motor rotation by running the motor in both directions. Normal rotation is CCW viewing the shaft end. Rotation can be changed by interchanging any two of the three motor leads. The rotation that gives the most water flow is typically the correct rotation.
2. After correct rotation has been established, check the current in each of the three motor leads and calculate the current unbalance as explained in 3 below.

   If the current unbalance is 2% or less, leave the leads as connected.

   If the current unbalance is more than 2%, current readings should be checked on each leg using each of three possible hook-ups. Roll the motor leads across the starter in the same direction to prevent motor reversal.
3. To calculate percent of current unbalance:
   A. Add the three line amps values together.
   B. Divide the sum by three, yielding average current.
   C. Pick the amp value which is furthest from the average current (either high or low).
   D. Determine the difference between this amp value (furthest from average) and the average.
   E. Divide the difference by the average. Multiply the result by 100 to determine percent of unbalance.
4. Current unbalance should not exceed 5% at max amp load or 10% at rated input load. If the unbalance cannot be corrected by rolling leads, the source of the unbalance must be located and corrected. If, on the three possible hookups, the leg farthest from the average stays on the same power lead, most of the unbalance is coming from the “power side” of the system. If the reading farthest from average moves with the same motor lead, the primary source of unbalance is on the “motor side” of the starter. In this instance, consider a damaged cable, leaking splice, poor connection, or faulty motor winding.

Phase designation of leads for CCW rotation viewing shaft end.

To reverse rotation, interchange any two leads.

Phase 1 or “A” - Black, T1, or U1

Phase 2 or “B” - Yellow, T2, or V1

Phase 3 or “C” - Red, T3, or W1

NOTICE: Phase 1, 2 and 3 may not be L1, L2 and L3.

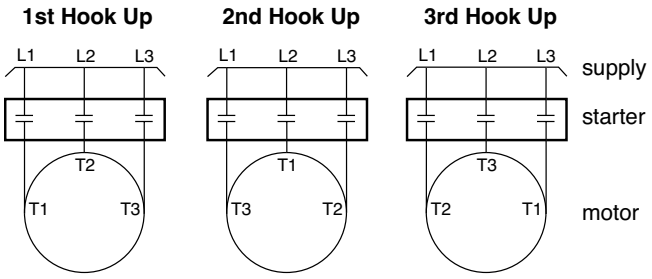

EXAMPLE:

T1 = 51 amps	T3 = 50 amps	T2 = 50 amps
T2 = 46 amps	T1 = 49 amps	T3 = 48 amps
+ T3 = 53 amps	+ T2 = 51 amps	+ T1 = 52 amps
Total = 150 amps	Total = 150 amps	Total = 150 amps
$\frac{150}{3}$ = 50 amps	$\frac{150}{3}$ = 50 amps	$\frac{150}{3}$ = 50 amps
50 - 46 = 4 amps	50 - 49 = 1 amp	50 - 48 = 2 amps
$\frac{4}{50}$ = 0.08 or 8%	$\frac{1}{50}$ = 0.02 or 2%	$\frac{2}{50}$ = 0.04 or 4%

Three-Phase Motor Lead Identification

WARNING: When installing 6-lead motors extra care must be used to ensure lead identification at the surface. Leads must be marked and connected per diagram. Motor leads are not connected red to red, yellow to yellow, etc.

Line Connections — Six-Lead Motors

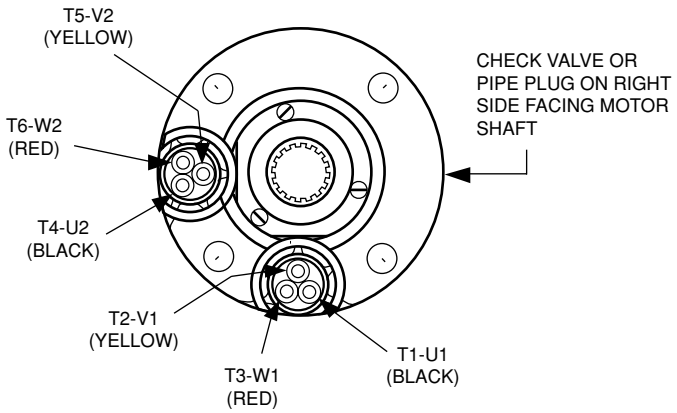

90° Lead Spacing

Connections for across-the-line starting, running, and any reduced voltage starting except WYE-DELTA type starters.

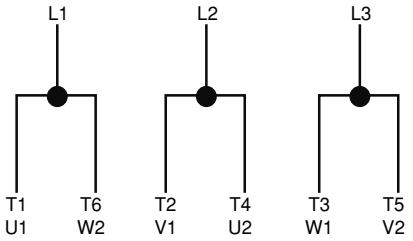

WYE-DELTA starters connect the motor as shown below during starting, then change to the running connection shown at the left.

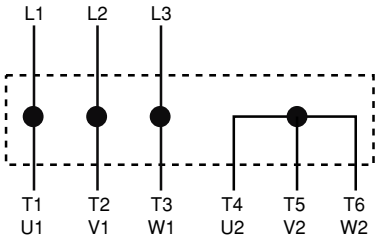

Each motor lead is numbered with two markers, one near each end. To reverse rotation, interchange any two line connections.

Phase Converters

There are a number of different types of phase converters available. Each generates three-phase power from a single-phase power line.

In all phase converters, the voltage balance is critical to current balance. Although some phase converters may be well balanced at one point on the system-operating curve, submersible pumping systems often operate at differing points on the curve as water levels and operating pressures fluctuate. Other converters may be well balanced at varying loads, but their output may vary widely with fluctuations in the input voltage.

The following guidelines have been established for submersible installations to be warrantable when used with a phase converter.

1. Limit pump loading to rated horsepower. Do not load into motor service factor.
2. Maintain at least 3 ft/s flow past the motor. Use a flow sleeve when necessary.
3. Use time delay fuses or circuit breakers in pump panel. Standard fuses or circuit breakers do not provide secondary motor protection.
4. SubMonitor may be used with electro mechanical type phase converters, however special connections are required. Consult SubMonitor Manual for connections of receiver and lightning arrestor.
5. SubMonitor will not work with electronic solid state phase converters.
6. Current unbalance must not exceed 10%.

Reduced Voltage Starters

All Franklin three-phase submersible motors are suitable for full-voltage starting. Under this condition the motor speed goes from zero to full speed within a half second or less. The motor current goes from zero to locked rotor amps, then drops to running amps at full speed. This may dim lights, cause momentary voltage dips to other electrical equipment, and shock power distribution transformers.

In some cases the power companies may require reduced-voltage starters to limit this voltage dip. There are also times when reduced-voltage starters may be desirable to reduce motor starting torque thus reducing the stress on shafts, couplings, and discharge piping. Reduced-voltage starters also slow the rapid acceleration of the water on start-up to help control upthrust and water hammer.

Reduced-voltage starters may not be required if the maximum recommended cable length is used. With maximum recommended cable length there is a 5% voltage drop in the cable at running amps, resulting in about 20% reduction in starting current and about 36% reduction in starting torque compared to having rated voltage at the motor. This may be enough reduction in starting current so that reduced-voltage starters are not required.

Three-Lead Motors: Autotransformer or solid-state reduced-voltage starters may be used for soft-starting standard three-phase motors.

When autotransformer starters are used, the motor should be supplied with at least 55% of rated voltage to ensure adequate starting torque. Most autotransformer starters have 65% and 80% taps. Setting the taps on these starters depends on the percentage of the maximum allowable cable length used in the system. If the cable length is less than 50% of the maximum allowable, either the 65% or the 80% taps may be used. When the cable length is more than 50% of allowable, the 80% tap should be used.

Six-Lead Motors: Wye-Delta starters are used with six-lead Wye-Delta motors. All Franklin 6" and 8" three-phase motors are available in six-lead Wye-Delta construction. Consult the factory for details and availability. Part winding starters are not compatible with Franklin Electric submersible motors and should not be used.

Wye-Delta starters of the open-transition type, which momentarily interrupt power during the starting cycle, are not recommended. Closed-transition starters have no interruption of power during the start cycle and can be used with satisfactory results.

Reduced-voltage starters have adjustable settings for acceleration ramp time, typically preset at 30 seconds. They must be adjusted so the motor is at full voltage within THREE SECONDS MAXIMUM to prevent excessive radial and thrust bearing wear.

If Subtrol-Plus or SubMonitor is used the acceleration time must be set to TWO SECONDS MAXIMUM due to the 3 second reaction time of the Subtrol-Plus or SubMonitor.

Solid-state starters AKA soft starts may not be compatible with Subtrol-Plus/SubMonitor. However, in some cases a bypass contactor has been used. Consult the factory for details.

During shutdown, Franklin Electric's recommendation is for the power to be removed, allowing the pump/motor to coast down. Stopping the motor by ramping down the voltage is possible, but should be limited to three (3) seconds maximum.

Inline Booster Pump Systems

Franklin Electric offers three different types of motors for non-vertical applications.

1. The **Booster** motors are specifically designed for booster applications. They are the **"Best Choice" for sealed Reverse Osmosis applications.** These motors are the result of two years of focused development and bring additional value and durability to booster module systems. These motors are only available to OEMs or Distributors who have demonstrated capability in Booster Module systems design and operation and adhere to Franklin's Application Manual requirements.

2. The **Hi-Temp** motors have many of the internal design features of the Booster motor. It's additional length allows for higher temperature handling and the Sand Fighter sealing system provides greater abrasion resistance. One or both of these conditions are often experienced in open atmosphere applications such as lakes, ponds, etc.

3. The **Standard Vertical Water Well** (40-125 hp) motors can be adapted to non-vertical applications when applied per the below guidelines. However, they will be more sensitive to application variances than the other two designs.

All of the above motors must be applied per the guidelines listed below. In addition, for all applications where the motor is applied in a sealed system, a Submersible Motor Booster Installation Record (Form 3655) or its equivalent must be completed at startup and received by Franklin Electric within 60 days. A sealed system is one where the motor and pump intake are mounted in a sleeve and the water feeding the pump intake is not open to the atmosphere.

Continued on next page

Inline Booster Pump Systems (continued)

Design And Operational Requirements

1. **Non-Vertical Operation:** Vertical Shaft-up (0°) to Horizontal (90°) operation is acceptable as long as the pump transmits "down-thrust" to the motor within 3 seconds after start-up and continuously during operation. However, it is best practice to provide a positive slope whenever it is possible, even if it is only a few degrees.

2. **Motor, Sleeve, and Pump Support System:** The booster sleeve ID must be sized according to the motor cooling and pump NPSHR requirements. The support system must support the motor's weight, prevent motor rotation and keep the motor and pump aligned. The support system must also allow for thermal axial expansion of the motor without creating binding forces.

3. **Motor Support Points:** A minimum of two support points are required on the motor. One in the motor/pump flange connection area and one in the bottom end of the motor area. The motor castings, not the shell area, are recommended as support points. If the support is a full length support and/or has bands in the shell area, they must not restrict heat transfer or deform the shell.

4. **Motor Support Material and Design:** The support system shall not create any areas of cavitation or other areas of reduced flow less than the minimum rate required by this manual. They should also be designed to minimize turbulence and vibration and provide stable alignment. The support materials and locations must not inhibit the heat transfer away from the motor.

5. **Motor and Pump Alignment:** The maximum allowable misalignment between the motor, pump, and pump discharge is 0.025 inch per 12 inches of length (2 mm per 1000 mm of length). This must be measured in both directions along the assembly using the motor/pump flange connection as the starting point. The booster sleeve and support system must be rigid enough to maintain this alignment during assembly, shipping, operation and maintenance.

6. The best motor lubrication and heat resistance is obtained with the factory based propylene glycol fill solution. Only when an application MUST HAVE deionized (DI) water should the factory fill solution be replaced. When a deionized water fill is required, the motor must be derated as indicated on the below chart. The exchange of the motor fill solution to DI water must be done by an approved Franklin service shop or representative using a vacuum fill system per Franklin's Motor Service Manual instruction. The motor shell then must be permanently stamped with a D closely behind the Serial Number.

   The maximum pressure that can be applied to the motor internal components during the removal of the factory fill solution is 7 psi (0.5 bar.)

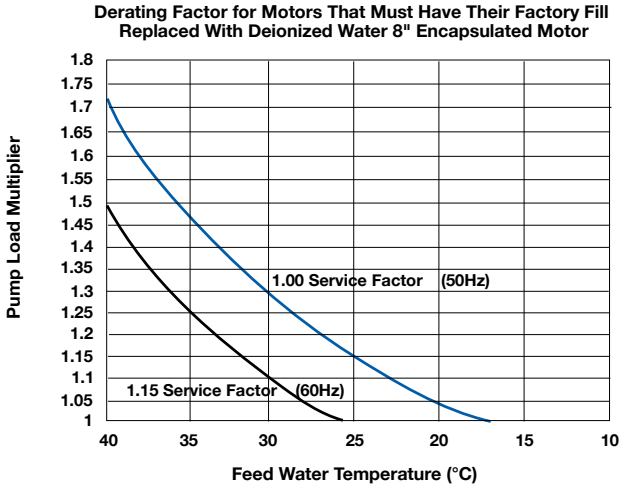

FIG. 12

First: Determine maximum Feed Water Temperature that will be experienced in this application. If the feed water exceeds the maximum ambient of the motor, both the DI water derating and a hot water application derating must be applied.

Second: Determine the Pump Load Multiplier from the appropriate Service Factor curve. (Typical 1.15 Service Factor is for 60 Hz ratings &1.00 Service Factor for 50 Hz ratings).

Third: Multiply the Pump Load Requirement times the pump load multiplier number indicated on the vertical axis to determine the Minimum Motor Nameplate Rating.

Fourth: Select a motor with a nameplate equal or higher than the above calculated value.

7. **Motor Alterations - Sand Slinger & Check Valve Plug:** On 6" and 8" motors, the rubber sand slinger located on the shaft must be removed. If a pipe plug is covering the check valve, it must be removed. The special Booster motor already has these modifications.

8. **Frequency of Starts:** Fewer than 10 starts per 24-hour period are recommended. Allow at least 20 minutes between shutdown and start-up of the motor.

Continued on next page

Inline Booster Pump Systems (continued)

9. **Controls-Soft Starters and VFDs:** Reduced voltage starters and variable speed drives (inverter drives) may be used with Franklin three-phase submersible motors to reduce starting current, upthrust, and mechanical stress during start-up. The guidelines for their use with submersible motors are different than with normal air cooled motor applications. Refer to the Franklin Electric Application, Installation and Maintenance (AIM) Manual Reduced Voltage Starters section or Variable Speed Submersible Pump Operation, Inverter Drives sections for specific details including required filtering.

10. **Motor Overload Protection:** Submersible motors require properly sized ambient compensated Class 10 quick-trip overloads per Franklin's AIM Manual guidelines to protect the motor. Class 20 or higher overloads are NOT acceptable. Franklin's SubMonitor is strongly recommended for all large submersibles since it is capable of sensing motor heat without any additional wiring to the motor. Applications using Soft Starters with a SubMonitor require a start-up bypass - consult the factory for details. SubMonitor can not be used in applications using a VFD control.

11. **Motor Surge Protection:** Properly sized, grounded and dedicated motor surge arrestors must be installed in the supply line of the booster module as close to the motor as possible. This is required on all systems including those using soft-starters and variable speed drives (inverter drives).

12. **Wiring:** Franklin's lead assemblies are only sized for submerged operation in water to the motor nameplate maximum ambient temperature and may overheat and cause failure or serious injury if operated in air. Any wiring not submerged must meet applicable national and local wiring codes and Franklin Cable Chart tables 16-21. (Notice: wire size, wire rating and insulation temperature rating must be known when determining its suitability to operate in air or conduit. Typically, for a given size and rating, as the insulation temperature rating increases its ability to operate in air or conduit also increases.)

13. **Check Valves:** Spring-loaded check valves must be used on start-up to minimize motor upthrusting, water hammer, or in multiple booster (parallel) applications to prevent reverse flow.

14. **Pressure Relief Valves:** A pressure relief valve is required and must be selected to ensure that, as the pump approaches shut-off, it never reaches the point that the motor will not have adequate cooling flow past it.

15. **System Purge (Can Flooding):** An air bleeder valve must be installed on the booster sleeve so that flooding may be accomplished prior to booster start-up. Once flooding is complete, the booster should be started and brought up to operating pressure as quickly as possible to minimize the duration of an upthrust condition. At no time should air be allowed to gather in the booster sleeve because this will prevent proper cooling of the motor and permanently damage it.

16. **System Flush – Must Not Spin Pump:** Applications may utilize a low flow flushing operation. Flow through the booster sleeve must not spin the pump impellers and the motor shaft. If spinning takes place, the bearing system will be permanently damaged and the motor life shortened. Consult the booster pump manufacturer for maximum flow rate through the pump when the motor is not energized.

Table 38 Franklin Cable chart (See 12. Wiring)

CABLE TEMP. RATING (°C)	MOTOR NAMEPLATE RATED AMPS FULL LOAD	#10 AWG		#8 AWG		#6 AWG		#4 AWG		#2 AWG	
		IN AIR	IN CONDUIT	IN AIR	IN CONDUIT	IN AIR	IN CONDUIT	IN AIR	IN CONDUIT	IN AIR	IN CONDUIT
75	3-LEAD (DOL)	40A	28A	56A	40A	76A	52A	100A	68A	136A	92A
	6-LEAD (Y-Δ)	69A	48A	97A	69A	132A	90A	173A	118A	236A	159A
90	3-LEAD (DOL)	44A	32A	64A	44A	84A	60A	112A	76A	152A	104A
	6-LEAD (Y-Δ)	76A	55A	111A	76A	145A	104A	194A	132A	263A	180A
125	3-LEAD (DOL)	66A	46A	77A	53A	109A	75A	153A	105A	195A	134A
	6-LEAD (Y-Δ)	114A	80A	133A	91A	188A	130A	265A	181A	337A	232A

Based on 30 °C maximum ambient with cable length of 100 feet or less.

Continued on next page

Inline Booster Pump Systems (continued)

17. **Open Atmosphere Booster Pump Systems:** When an open booster is placed in a lake, tank, etc. that is open to atmospheric pressure, the water level must provide sufficient head pressure to allow the pump to operate above its NPSHR requirement at all times and all seasons. Adequate inlet pressure must be provided prior to booster start-up.

Four Continuous Monitoring System Requirements for Sealed Booster Systems.

1. **Water Temperature:** Feed water on each booster must be continuously monitored and not allowed to exceed the motor nameplate maximum ambient temperature at any time. IF THE INLET TEMPERATURE EXCEEDS THE MOTOR NAMEPLATE MAXIMUM AMBIENT TEMPERATURE, THE SYSTEM MUST SHUTDOWN IMMEDIATELY TO PREVENT PERMANENT MOTOR DAMAGE. If feed water temperatures are expected to be above the allowable temperature, the motor must be derated. See Franklin's AIM Manual Hot Water Applications section for derating guidelines. (The high temperature feed water derating is in addition to the exchange to DI water derating if the motor factory fill solution was exchanged to DI water.)

2. **Inlet Pressure:** The inlet pressure on each booster module must be continuously monitored. It must always be positive and higher than the NPSHR (Net Positive Suction Head Requirement) of the pump. A minimum of 20 PSIG (1.38 Bar) is required at all times, except for 10 seconds or less when the motor is starting and the system is coming up to pressure. Even during these 10 seconds the pressure must remain positive and be higher than the NPSHR (Net Positive Suction Head Requirement) of the pump.

   PSIG is the actual value displayed on a pressure gauge in the system piping. PSIG is the pressure above the atmospheric conditions. If at any time these pressure requirements are not being met, the motor must be de-energized immediately to prevent permanent damage to the motor. Once the motor is damaged, it is usually not immediately noticeable, but progresses and results in a premature motor failure weeks or months after the damage occurred.

   Motors that will be exposed to pressure in excess of 500 psi (34.47 Bar) must undergo special high pressure testing. Consult factory for details and availability.

3. **Discharge Flow:** The flow rate for each pump must not be allowed to drop below the motor minimum cooling flow requirement. IF THE MOTOR MINIMUM COOLING FLOW REQUIREMENT IS NOT BEING MET FOR MORE THAN 10 SECONDS, THE SYSTEM MUST BE SHUT DOWN IMMEDIATELY TO PREVENT PERMANENT MOTOR DAMAGE.

4. **Discharge Pressure:** The discharge pressure must be monitored to ensure that a downthrust load toward the motor is present within 3 seconds after start-up and continuously during operation. IF THE MOTOR DISCHARGE PRESSURE IS NOT ADEQUATE TO MEET THIS REQUIREMENT, THE SYSTEM MUST BE SHUT DOWN IMMEDIATELY TO PREVENT PERMANENT MOTOR DAMAGE.

Variable Frequency Drive Submersible Motor Requirements

Franklin Electric's three-phase, encapsulated submersible motors can be used with variable frequency drives (VFD) when applied within the guidelines below.

All three-phase, encapsulated submersible motors must have the VFD sized based on the motor's nameplate maximum amps, not horsepower. The continuous rated amps of the VFD must be equal to or greater than the motor's nameplate maximum amps or warranty will be void.

Franklin Electric's single-phase, 2- and 3-wire, encapsulated submersible motors can only be used with the appropriate Franklin constant pressure controller.

Franklin Electric's submersible motor Application Installation Maintenance (AIM) manual should be checked for the latest guidelines and can be found online at www.franklin-electric.com.

WARNING: There is a potential shock hazard from contact with and/or touching the insulated cables connected to the variable frequency drive output anytime the motor has energy applied.

Output Filter Requirement Test:

NOTICE: An incoming power supply or line-side filter for the drive does not replace the need for additional output filters.

An output filter is required if the answer is yes to one or both of the items below:
#1 - Is the VFD's pulse width modulation (PWM) voltage rise-time (dV/dt) more than 500 Volts per micro-second (500 V/µ-second)?

#2 - Is the motor nameplate voltage more than 379 Volts and is the cable from drive-to-motor more than 50 ft (15.2 m)?

NOTICE:
More than 99% of the drives applied on water well submersible motors will require the purchase of additional output filtering based on question #1.

Output filters can be expensive. However, when needed, it is required for the motor to be considered for warranty. Make sure this item is not overlooked when quoting a job.

PWM dV/dt value can be defined as: the rate at which voltage is changing with time or how fast the voltage is accelerating. This information can be supplied by the drive manufacturer or the manufacturer's drive specification sheet. The dV/dt value cannot be measured with typical field equipment, even when using a true-RMS voltage/amperage multi-meter.

Franklin Electric has a line of VFDs that are specifically designed for Franklin application systems. These VFDs are used in the MonoDrive and SubDrive constant pressure systems. Franklin drive systems have the required additional output filtering installed; however, the SubDrive HPX does not.

Types of Output Filters:

A resistor-inductor-capacitor (RLC) filter has both a high pass filter & a low pass filter section and are considered the best practice, but a high pass reactor filter is also acceptable.

Filters should be recommended by the drive manufacturer; for the correct recommendations provide them with answers to all five of the items below.

REQUIRED ITEMS FOR PROPER VFD FILTER SIZING:
(1) VFD model (2) Carrier frequency setting (3) Motor nameplate voltage (4) Motor nameplate max amps (5) Cable length from the drive output terminals to the motor

Input Current & Motor Overload Protection:

- Motor input current should be set at the system's typical operating current when running at nameplate rated voltage and frequency (Hz).
- Motor overload protection should be set to trip at 115% of the system's typical operating current.
- Motor overload protection must trip equal to or faster than NEMA Class 10 motor overload curve requirements.

Motor Maximum Load Limits:

- The system must never operate in excess of the motor nameplate maximum amps.
- On 50 Hz motors, nameplate amps are maximum amps as these motors have a 1.0 service factor.

Variable Frequency Drive Submersible Motor Requirements

Motor Operating Hertz, Cooling Requirements & Underload Settings:

- Standard practice for large VFD installations is to limit the operation to 60 Hz max. Operating at greater than 60 Hz requires special system design considerations.
- The motor must never operate below 30 Hz. This is the minimum speed required to provide correct bearing lubrication.
- The motor's operating speed must always operate so the minimum water flow requirements of 0.5 ft/sec for 6-inch & 8-inch motors and 0.25 ft/sec for 4-inch motors is supplied.
- The motor underload protection is normally set to trip at 80% of the system's typical operating current. However, the underload trip point must be selected so that minimum flow requirements are always met.

Starting & Stopping Ramp Settings:

- The motor must reach or pass the 30 Hz operating speed within 1 second of the motor being energized. If this does not occur, the motor bearings will be damaged and the motor life reduced.
- The best stopping method is to turn power off followed by a natural coast to stop.
- A controlled stop from 30 Hz to 0 Hz is allowed if the time does not exceed 1 second.

Drive Carrier Frequency:

- The carrier frequency is set in the field. The drive typically has a selectable range between 2k and 12k Hz. The higher the carrier wave frequency setting, the greater the voltage spikes; the lower the carrier wave frequency setting, the rougher/poorer the shape of the power curve.
- The carrier frequency should be set within the range of 4k to 5k Hz for encapsulated submersible motors.

Application Function Setting:

- If the VFD has a setting of centrifugal pump or propeller fan it should be used.
- Centrifugal pumps and fans have similar load characteristics.

VFD Frequency of Starts:

- Keeping the starts per day within the recommended numbers shown in the frequency of starts section of the AIM manual provides the best system life. However, since in-rush current is typically reduced when used with a properly configured VFD, large 3-phase submersible motors can be started more frequently. In all cases a minimum of 7 minutes must be allowed between a power off and the next restart attempt or consecutive restart attempts.

NEMA MG1 Above Ground Motor Standard Comments:

- Franklin Electric encapsulated submersible motors are not declared inverter duty motors by NEMA MG1 standards. The reason is NEMA MG1 standard part 31 does not include a section covering encapsulated winding designs.
- Franklin submersible motors can be used with VFDs without problems or warranty concerns providing Franklin's Application Installation Maintenance (AIM) manual guidelines are followed. See Franklin's on-line AIM manual for the latest guidelines.

4" Super Stainless — Dimensions
(Standard Water Well)

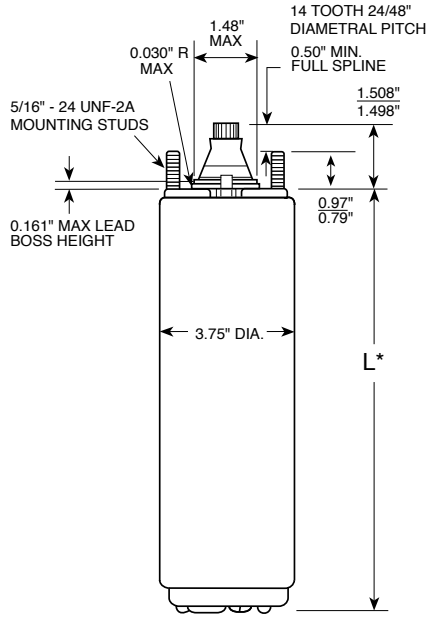

4" High Thrust — Dimensions
(Standard Water Well)

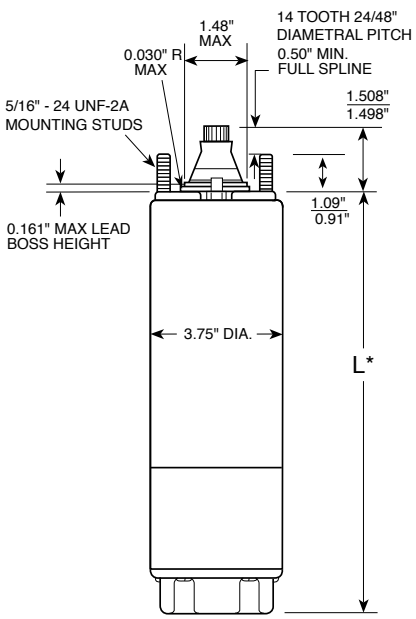

6" — Dimensions
(Standard Water Well)

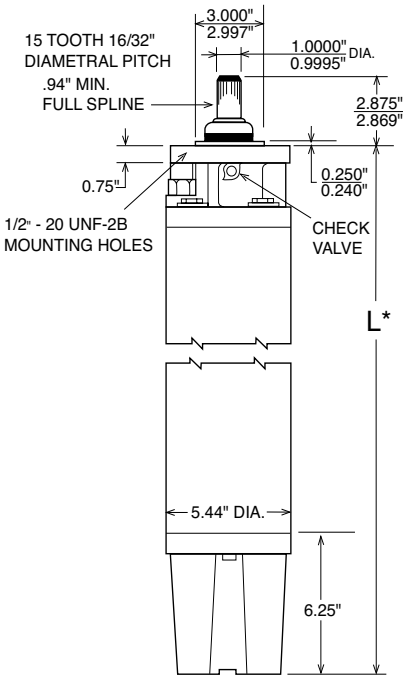

8" — Dimensions
(Standard Water Well)

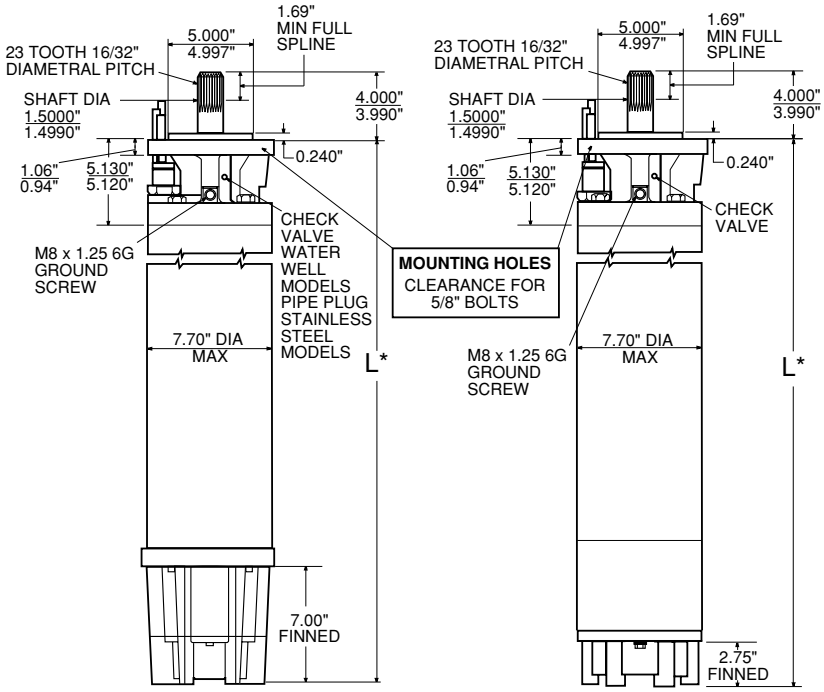

*** Motor lengths and shipping weights are available on Franklin Electric's web site (www.franklin-electric.com) or by calling Franklin's submersible hotline (800-348-2420).**

Tightening Motor Lead Connector Jam Nut

4" Motors with Jam Nut:
15 to 20 ft-lb (20 to 27 Nm)

4" Motors with 2 Screw Clamp Plate:
35 to 45 in-lb (4.0 to 5.1 Nm)

6" Motors:
40 to 50 ft-lb (54 to 68 Nm)

8" Motors with 1-3/16" to 1-5/8" Jam Nut:
50 to 60 ft-lb (68 to 81 Nm)

8" Motors with 4 Screw Clamp Plate:
Apply increasing torque to the screws equally in a criss-cross pattern until 80 to 90 in-lb (9.0 to 10.2 Nm) is reached.

Jam nut tightening torques recommended for field assembly are shown. Rubber compression set within the first few hours after assembly may reduce the jam nut torque. This is a normal condition which does not indicate reduced seal effectiveness. Retightening is not required, but is permissible and recommended if original torque was questionable.

A motor lead assembly should not be reused. A new lead assembly should be used whenever one is removed from the motor, because rubber set and possible damage from removal may prevent proper resealing of the old lead.

All motors returned for warranty consideration must have the lead returned with the motor.

Pump to Motor Coupling

Assemble coupling with non-toxic FDA approved waterproof grease such as Mobile FM102, Texaco CYGNUS2661, or approved equivalent. This prevents abrasives from entering the spline area and prolongs spline life.

Pump to Motor Assembly

After assembling the motor to the pump, torque mounting fasteners to the following:

4" Pump and Motor: 10 lb-ft (14 Nm)

6" Pump and Motor: 50 lb-ft (68 Nm)

8" Pump and Motor: 120 lb-ft (163 Nm)

Shaft Height and Free End Play

Table 42

MOTOR	NORMAL SHAFT HEIGHT		DIMENSION SHAFT HEIGHT		FREE END PLAY	
					MIN.	MAX.
4"	1 1/2"	38.1 mm	1.508" / 1.498"	38.30 / 38.05 mm	0.010" 0.25 mm	0.045" 1.14 mm
6"	2 7/8"	73.0 mm	2.875" / 2.869"	73.02 / 72.88 mm	0.030" 0.76 mm	0.050" 1.27 mm
8" TYPE 1	4"	101.6 mm	4.000" / 3.990"	101.60 / 101.35 mm	0.008" 0.20 mm	0.032" 0.81 mm
8" TYPE 2.1	4"	101.6 mm	4.000" / 3.990"	101.60 / 101.35 mm	0.030" 0.76 mm	0.080" 2.03 mm

If the height, measured from the pump-mounting surface of the motor, is low and/or end play exceeds the limit, the motor thrust bearing is possibly damaged, and should be replaced.

Submersible Leads and Cables

A common question is why motor leads are smaller than specified in Franklin's cable charts.

The leads are considered a part of the motor and actually are a connection between the large supply wire and the motor winding. The motor leads are short and there is virtually no voltage drop across the lead.

In addition, the lead assemblies **operate under water**, while at least part of the supply cable must **operate in air.** Lead assemblies running under water operate cooler.

CAUTION: Lead assemblies on submersible motors are suitable only for use in water and may overheat and cause failure if operated in air.

System Troubleshooting

Motor Does Not Start

POSSIBLE CAUSE	CHECKING PROCEDURES	CORRECTIVE ACTION
A. No power or incorrect voltage.	Check voltage at line terminals. The voltage must be ± 10% of rated voltage.	Contact power company if voltage is incorrect.
B. Fuses blown or circuit breakers tripped.	Check fuses for recommended size and check for loose, dirty or corroded connections in fuse receptacle. Check for tripped circuit breakers.	Replace with proper fuse or reset circuit breakers.
C. Defective pressure switch.	Check voltage at contact points. Improper contact of switch points can cause voltage less than line voltage.	Replace pressure switch or clean points.
D. Control box malfunction.	For detailed procedure, see pages 48-56.	Repair or replace.
E. Defective wiring.	Check for loose or corroded connections or defective wiring	Correct faulty wiring or connections.
F. Bound pump.	Check for misalignment between pump and motor or a sand bound pump. Amp readings will be 3 to 6 times higher than normal until the overload trips	Pull pump and correct problem. Run new installation until the water clears
G. Defective cable or motor.	For detailed procedure, see pages 46 & 47.	Repair or replace.

Motor Starts Too Often

A. Pressure switch.	Check setting on pressure switch and examine for defects.	Reset limit or replace switch.
B. Check valve - stuck open.	Damaged or defective check valve will not hold pressure.	Replace if defective.
C. Waterlogged tank.	Check air charge	Clean or replace.
D. Leak in system.	Check system for leaks.	Replace damaged pipes or repair leaks.

System Troubleshooting

Motor Runs Continuously

POSSIBLE CAUSE	CHECKING PROCEDURES	CORRECTIVE ACTION
A. Pressure switch.	Check switch for welded contacts. Check switch adjustments.	Clean contacts, replace switch, or adjust setting.
B. Low water level in well.	Pump may exceed well capacity. Shut off pump, wait for well to recover. Check static and drawdown level from well head.	Throttle pump output or reset pump to lower level. Do not lower if sand may clog pump.
C. Leak in system.	Check system for leaks.	Replace damaged pipes or repair leaks.
D. Worn pump.	Symptoms of worn pump are similar to those of drop pipe leak or low water level in well. Reduce pressure switch setting, if pump shuts off worn parts may be the fault.	Pull pump and replace worn parts.
E. Loose coupling or broken motor shaft.	Check for loose coupling or damaged shaft.	Replace worn or damaged parts.
F. Pump screen blocked.	Check for clogged intake screen.	Clean screen and reset pump depth.
G. Check valve stuck closed.	Check operation of check valve.	Replace if defective.
H. Control box malfunction.	See pages 47-55 for single-phase.	Repair or replace.

Motor Runs But Overload Protector Trips

A. Incorrect voltage.	Using voltmeter, check the line terminals. Voltage must be within ± 10% of rated voltage.	Contact power company if voltage is incorrect.
B. Overheated protectors.	Direct sunlight or other heat source can raise control box temperature causing protectors to trip. The box must not be hot to touch.	Shade box, provide ventilation or move box away from source.
C. Defective control box.	For detailed procedures, see pages 47-55.	Repair or replace.
D. Defective motor or cable.	For detailed procedures, see pages 45 & 46.	Repair or replace.
E. Worn pump or motor.	Check running current, see tables 13, 22, 24 & 27.	Replace pump and/or motor.

Table 45 Preliminary Tests - All Sizes Single- and Three-Phase

TEST	PROCEDURE	WHAT IT MEANS
Insulation Resistance	1. Open master breaker and disconnect all leads from control box or pressure switch (QD type control, remove lid) to avoid electric shock hazard and damage to the meter. 2. Use a megohmmeter or set the scale lever to R X 100K on an ohmmeter. Zero the meter. 3. Connect one meter lead to any one of the motor leads and the other lead to the metal drop pipe. If the drop pipe is plastic, connect the meter lead to ground.	1. If the ohms value is normal (table 46), the motor is not grounded and the cable insulation is not damaged. 2. If the ohms value is below normal, either the windings are grounded or the cable insulation is damaged. Check the cable at the well seal as the insulation is sometimes damaged by being pinched.
Winding Resistance	1. Open master breaker and disconnect all leads from control box or pressure switch (QD type control, remove lid) to avoid electric shock hazard and damage to the meter. 2. Set the scale lever to R X 1 for values under 10 ohms. For values over 10 ohms, set the scale lever to R X 10. "zero" the ohmmeter. 3. On 3-wire motors measure the resistance of yellow to black (main winding) and yellow to red (start winding). On 2-wire motors: measure the resistance from line-to-line. Three-phase motors: measure the resistance line-to-line for all three combinations.	1. If all ohms values are normal (tables 13, 22, 24 & 27), the motor windings are neither shorted nor open, and the cable colors are correct 2. If any one value is less than normal, the motor is shorted. 3. If any one ohm value is greater than normal, the winding or the cable is open, or there is a poor cable joint or connection. 4. If some ohms values are greater than normal and some less on single-phase motors, the leads are mixed. See page 46 to verify cable colors.

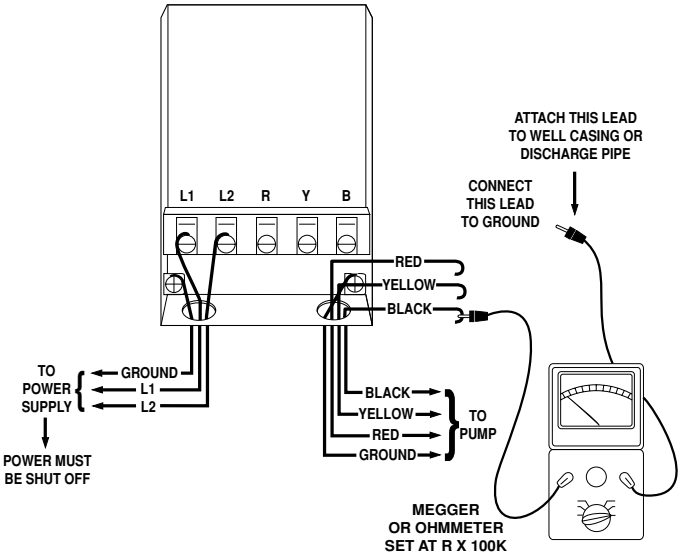

FIG. 13

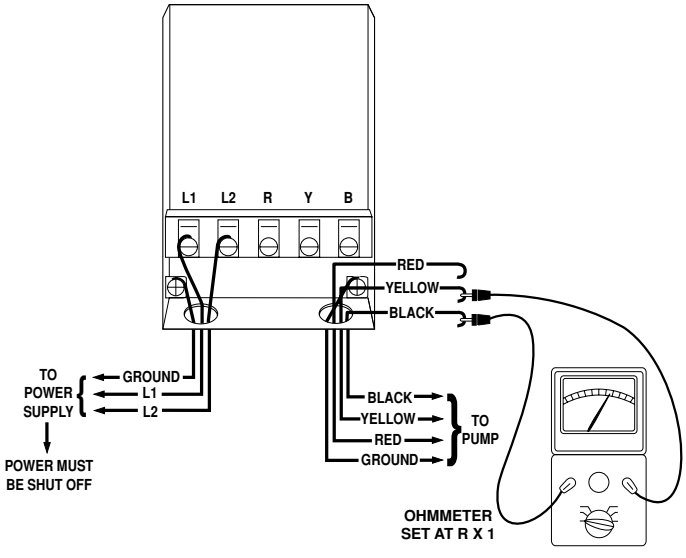

FIG. 14

Insulation Resistance Readings

Table 46 Normal ohm and Megohm Values Between All Leads and Ground

CONDITION OF MOTOR AND LEADS	OHMS VALUE	MEGOHM VALUE
A new motor (without drop cable).	200,000,000 (or more)	200.0 (or more)
A used motor which can be reinstalled in well.	10,000,000 (or more)	10.0 (or more)
MOTOR IN WELL. READINGS ARE FOR DROP CABLE PLUS MOTOR.		
New motor.	2,000,000 (or more)	2.0 (or more)
Motor in good condition.	500,000 - 2,000,000	0.50 - 2.0
Insulation damage, locate and repair.	Less than 500,000	Less than .50

Insulation resistance varies very little with rating. Motors of all hp, voltage, and phase rating have similar values of insulation resistance.

The table above is based on readings taken with a megohm meter with a 500 VDC output. Readings may vary using a lower voltage ohmmeter, consult Franklin Electric if readings are in question.

Resistance of Drop Cable (ohms)

The values below are for copper conductors. If aluminum conductor drop cable is used, the resistance will be higher. To determine the actual resistance of the aluminum drop cable, divide the ohm readings from this chart by 0.61. This chart shows total resistance of cable from control to motor and back.

Winding Resistance Measuring

The winding resistance measured at the motor should fall within the values in tables 13, 22, 24 & 27. When measured through the drop cable, the resistance of the drop cable must be subtracted from the ohmmeter readings to get the winding resistance of the motor. See table below.

Table 46A DC Resistance in ohms per 100 ft of Wire (Two conductors) @ 50 °F

AWG OR MCM WIRE SIZE (COPPER)	14	12	10	8	6	4	3	2
OHMS	0.544	0.338	0.214	0.135	0.082	0.052	0.041	0.032

1	1/0	2/0	3/0	4/0	250	300	350	400	500	600	700
0.026	0.021	0.017	0.013	0.010	0.0088	0.0073	0.0063	0.0056	0.0044	0.0037	0.0032

Identification Of Cables When Color Code Is Unknown (Single-Phase 3-Wire Units)

If the colors on the individual drop cables cannot be found with an ohmmeter, measure:

Cable 1 to Cable 2
Cable 2 to Cable 3
Cable 3 to Cable 1

Find the highest resistance reading.

The lead not used in the highest reading is the yellow lead.

Use the yellow lead and each of the other two leads to get two readings:

Highest is the red lead.
Lowest is the black lead.

EXAMPLE:

The ohmmeter readings were:

Cable 1 to Cable 2 - 6 ohms
Cable 2 to Cable 3 - 2 ohms
Cable 3 to Cable 1 - 4 ohms

The lead not used in the highest reading (6 ohms) was

Cable 3—Yellow

From the yellow lead, the highest reading (4 ohms) was

To Cable 1—Red

From the yellow lead, the lowest reading (2 ohms) was

To Cable 2—Black

Single-Phase Control Boxes

Checking and Repairing Procedures (Power On)

WARNING: Power must be on for these tests. Do not touch any live parts.

A. VOLTAGE MEASUREMENTS

Step 1. Motor Off

1. Measure voltage at L1 and L2 of pressure switch or line contactor.
2. Voltage Reading: Should be ± 10% of motor rating.

Step 2. Motor Running

1. Measure voltage at load side of pressure switch or line contactor with pump running.
2. Voltage Reading: Should remain the same except for slight dip on starting. Excessive voltage drop can be caused by loose connections, bad contacts, ground faults, or inadequate power supply.
3. Relay chatter is caused by low voltage or ground faults.

B. CURRENT (AMP) MEASUREMENTS

1. Measure current on all motor leads.
2. Amp Reading: Current in red lead should momentarily be high, then drop within one second to values in table 13. This verifies relay or solid state relay operation. Current in black and yellow leads should not exceed values in table 13.
3. Relay or switch failures will cause red lead current to remain high and overload tripping.
4. Open run capacitor(s) will cause amps to be higher than normal in the black and yellow motor leads and lower than normal in the red motor lead.
5. A bound pump will cause locked rotor amps and overloading tripping.
6. Low amps may be caused by pump running at shutoff, worn pump, or stripped splines.
7. Failed start capacitor or open switch/relay are indicated if the red lead current is not momentarily high at starting.

CAUTION: The tests in this manual for components such as capacitors, relays, and QD switches should be regarded as indicative and not as conclusive. For example, a capacitor may test good (not open, not shorted) but may have lost some of its capacitance and may no longer be able to perform its function.

Ohmmeter Tests

QD, Solid State Control Box (Power Off)

A. START CAPACITOR AND RUN CAPACITOR IF APPLICABLE (CRC)

1. Meter Setting: R x 1,000.
2. Connections: Capacitor terminals.
3. Correct meter reading: Pointer should swing toward zero, then back to infinity.

B. Q.D. (BLUE) RELAY

Step 1. Triac Test

1. Meter setting: R x 1,000.
2. Connections: Cap and B terminal.
3. Correct meter reading: Infinity for all models.

Step 2. Coil Test

1. Meter Setting: R x 1.
2. Connections: L1 and B.
3. Correct meter reading: Zero ohms for all models.

C. POTENTIAL (VOLTAGE) RELAY

Step 1. Coil Test

1. Meter setting: R x 1,000.
2. Connections: #2 & #5.
3. Correct meter readings:

   For 115 Volt Boxes:
   0.7-1.8 (700 to 1,800 ohms).

   For 230 Volt Boxes:
   4.5-7.0 (4,500 to 7,000 ohms).

Step 2. Contact Test

1. Meter setting: R x 1.
2. Connections: #1 & #2.
3. Correct meter reading: Zero for all models.

Ohmmeter Tests

Integral Horsepower Control Box (Power Off)

A. OVERLOADS (Push Reset Buttons to make sure contacts are closed.)

1. Meter Setting: R x 1.
2. Connections: Overload terminals.
3. Correct meter reading: Less than 0.5 ohms.

B. CAPACITOR (Disconnect leads from one side of each capacitor before checking.)

1. Meter Setting: R x 1,000.
2. Connections: Capacitor terminals.
3. Correct meter reading: Pointer should swing toward zero, then drift back to infinity, except for capacitors with resistors which will drift back to 15,000 ohms.

C. POTENTIAL (VOLTAGE) RELAY

Step 1. Coil Test

1. Meter setting: R x 1,000.
2. Connections: #2 & #5.
3. Correct meter readings: 4.5-7.0 (4,500 to 7,000 ohms) for all models.

Step 2. Contact Test

1. Meter Setting: R x 1.
2. Connections: #1 & #2.
3. Correct meter reading: Zero ohms for all models.

D. CONTACTOR

Step 1. Coil

1. Meter setting: R x 100
2. Connections: Coil terminals
3. Correct meter reading:
   1.8-14.0 (180 to 1,400 ohms)

Step 2. Contacts

1. Meter Setting: R X 1
2. Connections: L1 & T1 or L2 & T2
3. Manually close contacts
4. Correct meter reading: Zero ohms

CAUTION: The tests in this manual for components such as capacitors, relays, and QD switches should be regarded as indicative and not as conclusive. For example, a capacitor may test good (not open, not shorted) but may have lost some of its capacitance and may no longer be able to perform its function.

Table 49 QD Control Box Parts 60 Hz

HP	VOLTS	CONTROL BOX MODEL NUMBER	QD (BLUE) RELAY	START CAPACITOR	MFD	VOLTS	RUN CAPACITOR	MFD	VOLTS
1/3	115	280 102 4915	223 415 905	275 464 125	159-191	110			
	230	280 103 4915	223 415 901	275 464 126	43-53	220			
1/2	115	280 104 4915	223 415 906	275 464 201	250-300	125			
	230	280 105 4915	223 415 902	275 464 105	59-71	220			
	230	282 405 5015 (CRC)	223 415 912	275 464 126	43-53	220	156 362 101	15	370
3/4	230	280 107 4915	223 415 903	275 464 118	86-103	220			
	230	282 407 5015 (CRC)	223 415 913	275 464 105	59-71	220	156 362 102	23	370
1	230	280 108 4915	223 415 904	275 464 113	105-126	220			
	230	282 408 5015 (CRC)	223 415 914	275 464 118	86-103	220	156 362 102	23	370

Table 49A QD Capacitor Replacement Kits

CAPACITOR NUMBER	KIT
275 464 105	305 207 905
275 464 113	305 207 913
275 464 118	305 207 918
275 464 125	305 207 925
275 464 126	305 207 926
275 464 201	305 207 951
156 362 101	305 203 907
156 362 102	305 203 908

Table 49B Overload Kits 60 Hz

HP	VOLTS	KIT (1)
1/3	115	305 100 901
1/3	230	305 100 902
1/2	115	305 100 903
1/2	230	305 100 904
3/4	230	305 100 905
1	230	305 100 906

(1) For Control Boxes with model numbers that end with 4915.

Table 49C QD Relay Replacement Kits

QD RELAY NUMBER	KIT
223 415 901	305 101 901
223 415 902	305 101 902
223 415 903	305 101 903
223 415 904	305 101 904
223 415 905	305 101 905
223 415 906	305 101 906
223 415 912 (CRC)	305 105 901
223 415 913 (CRC)	305 105 902
223 415 914 (CRC)	305 105 903

FOOTNOTES:

(1) Control boxes supplied with QD Relays are designed to operate on 230-volt systems. For 208-volt systems or where line voltage is between 200 volts and 210 volts use the next larger cable size, or use a boost transformer to raise the voltage.

(2) Voltage relays kits for 115-volts (305 102 901) and 230-volts (305 102 902) will replace current, voltage or QD Relays, and solid state switches.

Table 50 Integral Horsepower Control Box Parts 60 Hz

MOTOR SIZE	MOTOR RATING HP	CONTROL BOX (1) MODEL NO.	CAPACITORS				OVERLOAD (2) PART NO.	RELAY (3) PART NO.	CONTACTOR (2) PART NO.
			PART NO. (2)	MFD.	VOLTS	QTY.			
4"	1 - 1.5 STANDARD	282 300 8110 (See Note 5)	275 464 113 S 155 328 102 R	105-126 10	220 370	1 1	275 411 107	155 031 102	
		282 300 8110 (See Note 5)	275 464 113 S 155 328 101 R	105-126 15	220 370	1 1	275 411 114 S 275 411 113 M	155 031 102	
		282 300 8610	275 464 113 S 155 328 101 R	105-126 15	220 370	1 1	None (See Note 4)	155 031 102	
4"	2 STANDARD	282 301 8110	275 464 113 S 155 328 103 R	105-126 20	220 370	1 1	275 411 117 S 275 411 113 M	155 031 102	
4"	2 DELUXE	282 301 8310	275 464 113 S 155 328 103 R	105-126 20	220 370	1 1	275 411 117 S 275 411 113 M	155 031 102	155 325 102 L
4"	3 STANDARD	282 302 8110	275 463 123 S 155 327 109 R	208-250 45	220 370	1 1	275 411 118 S 275 411 115 M	155 031 102	
4"	3 DELUXE	282 302 8310	275 463 123 S 155 327 109 R	208-250 45	220 370	1 1	275 411 118 S 275 411 115 M	155 031 102	155 325 102 L
4" & 6"	5 STANDARD	282 113 8110	275 468 119 S 155 327 114 R	270-324 40	330 370	1 2	275 411 119 S 275 406 102 M	155 031 601	
4" & 6"	5 DELUXE	282 113 9310	275 468 119 S 155 327 114 R	270-324 40	330 370	1 2	275 411 119 S 275 406 102 M	155 031 601	155 326 101 L
6"	7.5 STANDARD	282 201 9210	275 468 119 S 275 468 118 S 155 327 109 R	270-324 216-259 45	330 330 370	1 1 1	275 411 102 S 275 406 122 M	155 031 601	
6"	7.5 DELUXE	282 201 9310	275 468 119 S 275 468 118 S 155 327 109 R	270-324 216-259 45	330 330 370	1 1 1	275 411 102 S 275 406 121 M	155 031 601	155 326 102 L
6"	10 STANDARD	282 202 9210	275 468 119 S 275468 120 S 155 327 102 R	270-324 350-420 35	330 330 370	1 1 2	275 406 103 S 155 409 101 M	155 031 601	
6"	10 STANDARD	282 202 9230	275 463 120 S 275 468 118 S 275 468 119 S 155 327 102 R	130-154 216-259 270-324 35	330 330 330 370	1 1 1 2	275 406 103 S 155 409 101 M	155 031 601	
6"	10 DELUXE	282 202 9310	275 468 119 S 275468 120 S 155 327 102 R	270-324 350-420 35	330 330 370	1 1 2	275 406 103 S 155 409 101 M	155 031 601	155 326 102 L
6"	10 DELUXE	282 202 9330	275 463 120 S 275 468 118 S 275 468 119 S 155 327 102 R	130-154 216-259 270-324 35	330 330 330 370	1 1 1 2	275 406 103 S 155 409 101 M	155 031 601	155 326 102 L
6"	15 DELUXE	282 203 9310	275 468 120 S 155 327 109 R	350-420 45	330 370	2 3	275 406 103 S 155 409 102 M	155 031 601	155 429 101 L
6"	15 DELUXE	282 203 9330	275 463 122 S 275 468 119 S 155 327 109 R	161-193 270-324 45	330 330 370	1 2 3	275 406 103 S 155 409 102 M	155 031 601	155 429 101 L
6"	15 X-LARGE	282 203 9621	275 468 120 S 155 327 109 R	350-420 45	330 370	2 3	275 406 103 S 155 409 102 M	155 031 601 2 required	155 429 101 L

FOOTNOTES:

(1) Lightning arrestors 150 814 902 are suitable for all control boxes.

(2) S = Start, M = Main, L = Line, R = Run
Deluxe = Control box with line contactor.

(3) For 208-volt systems or where line voltage is between 200 volts and 210 volts, a low voltage relay is required. On 3 hp and smaller control boxes use relay part 155 031 103 in place of 155 031 102 and use the next larger cable size than specified in the 230-volt table. On 5 hp and larger use relay 155 031 602 in place of 155 031 601 and next larger wire. Boost transformers per page 15 are an alternative to special relays and cable.

(4) Control box model 282 300 8610 is designed for use with motors having internal overload protectors. If used with a 1.5 hp motor manufactured prior to date code 06H18, Overload/Capacitor Kit 305 388 901 is required.

(5) Control box model 282 300 8110 with date code 11C19 (March 2011) and newer contain 15 MFD run capacitor and both start and run overloads. This box is designed for use with any Franklin 1.5 hp motor.

Table 51 Integral hp Capacitor Replacement Kits

CAPACITOR NUMBER	KIT
275 463 120	305 206 920
275 463 122	305 206 922
275 463 123	305 206 923
275 464 113	305 207 913
275 468 118	305 208 918
275 468 119	305 208 919
275 468 120	305 208 920
155 327 101	305 203 901
155 327 102	305 203 902
155 327 109	305 203 909
155 327 114	305 203 914
155 328 101	305 204 901
155 328 102	305 204 902
155 328 103	305 204 903

Table 51A Integral hp Overload Replacement Kits

OVERLOAD NUMBER	KIT
275 406 102	305 214 902
275 406 103	305 214 903
275 406 121	305 214 921
275 406 122	305 214 922
275 411 102	305 215 902
275 411 107	305 215 907
275 411 108	305 215 908
275 411 113	305 215 913
275 411 114	305 215 914
275 411 115	305 215 915
275 411 117	305 215 917
275 411 118	305 215 918
275 411 119	305 215 919

Table 51B Integral hp Voltage Relay Replacement Kits

RELAY NUMBER	KIT
155 031 102	305 213 902
155 031 103	305 213 903
155 031 601	305 213 961
155 031 602	305 213 962

Table 51C Integral hp Contactor Replacement Kits

CONTACTOR	KIT
155 325 102	305 226 902
155 326 101	305 347 903
155 326 102	305 347 902
155 429 101	305 347 901

FOOTNOTES:

(1) The following kit number changes were made for number consistency purposes only. Parts in the kit did not change.

305 206 922 was 305 206 912

305 206 923 was 305 206 911

305 213 962 was 305 213 904

305 226 902 was 305 226 901

Control Box Wiring Diagrams

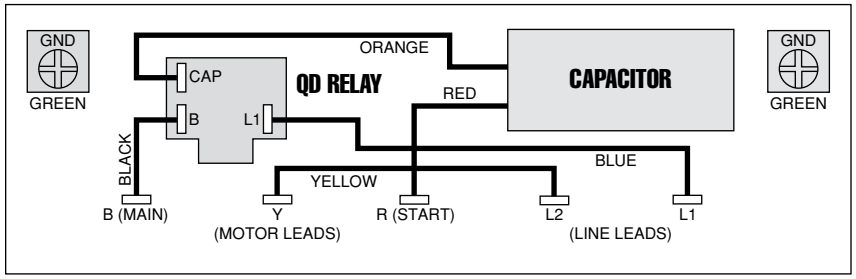

1/3 - 1 hp QD RELAY
280 10_ 4915
Sixth digit depends on hp

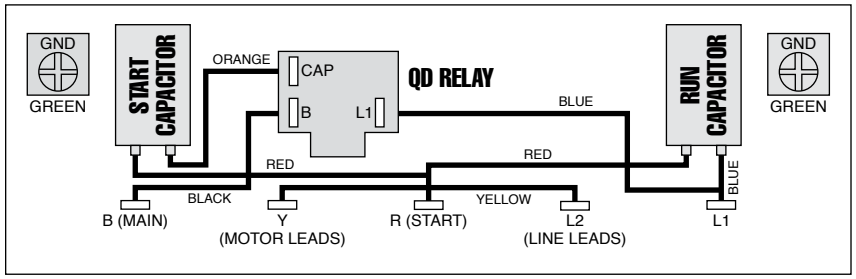

1/2 - 1 hp CRC QD RELAY
282 40_ 5015
Sixth digit depends on hp

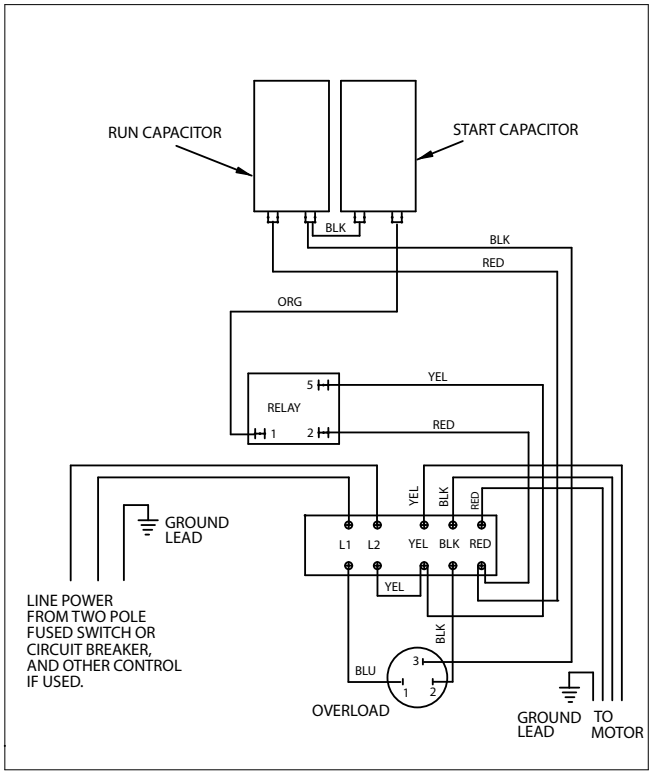

1 - 1.5 hp
282 300 8110
(Date Codes 11C19 & Older)

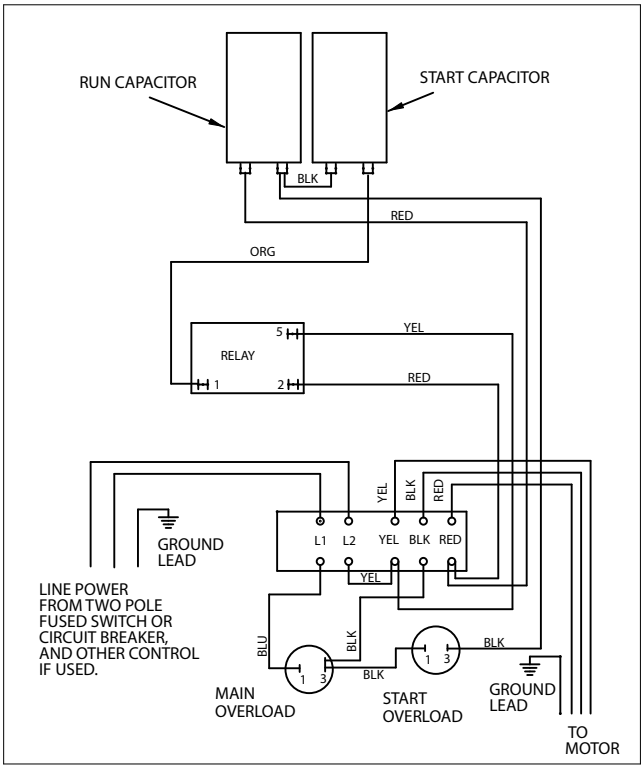

1 - 1.5 hp
282 300 8110
(Date Codes 11C19 & Newer)

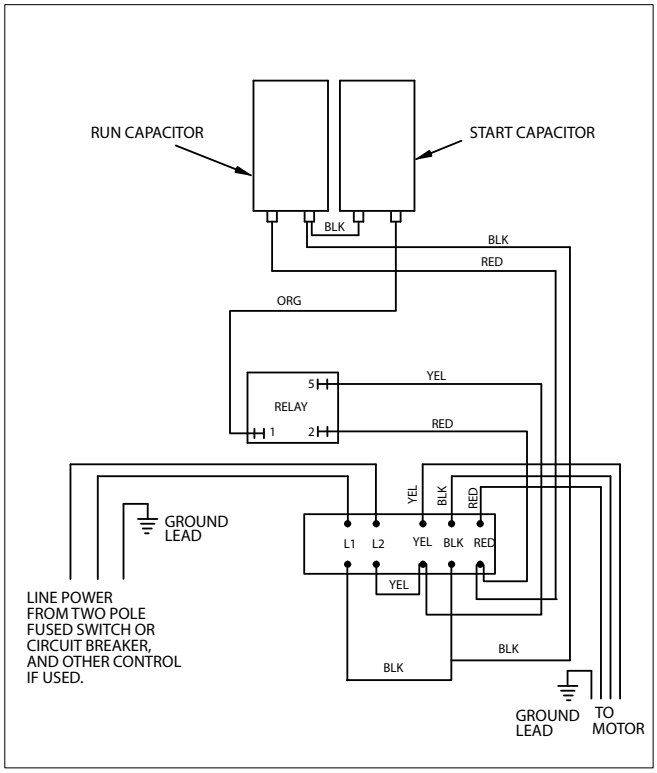

1 - 1.5 hp
282 300 8610

Single-Phase Motors & Controls

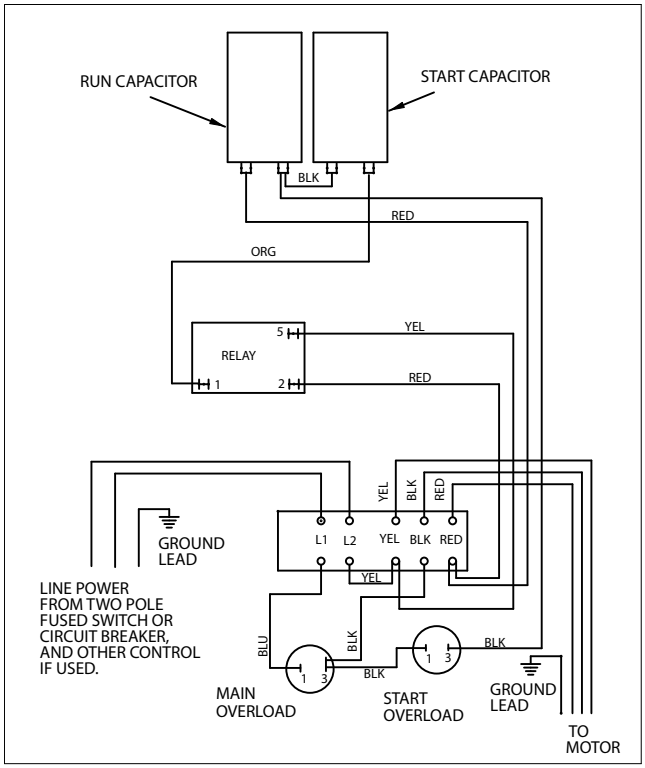

2 hp STANDARD
282 301 8110

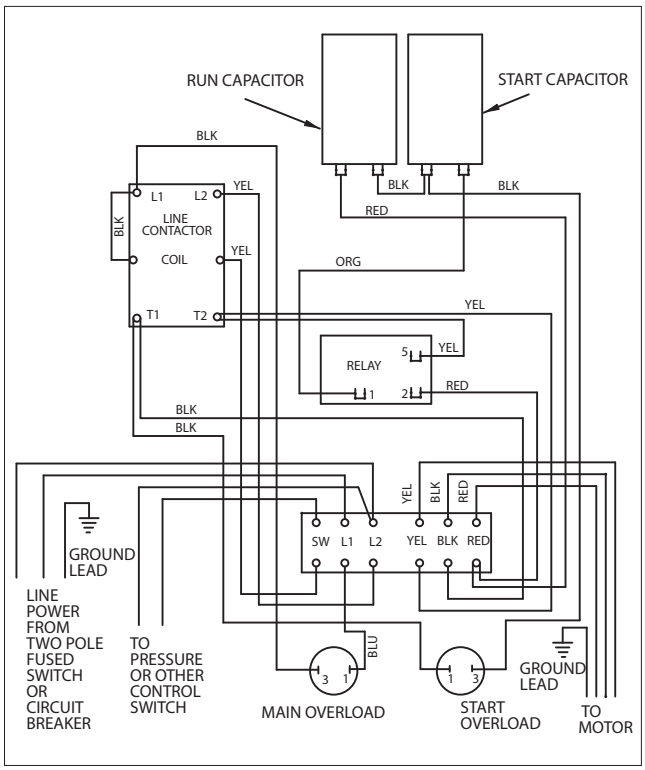

2 hp DELUXE
282 301 8310

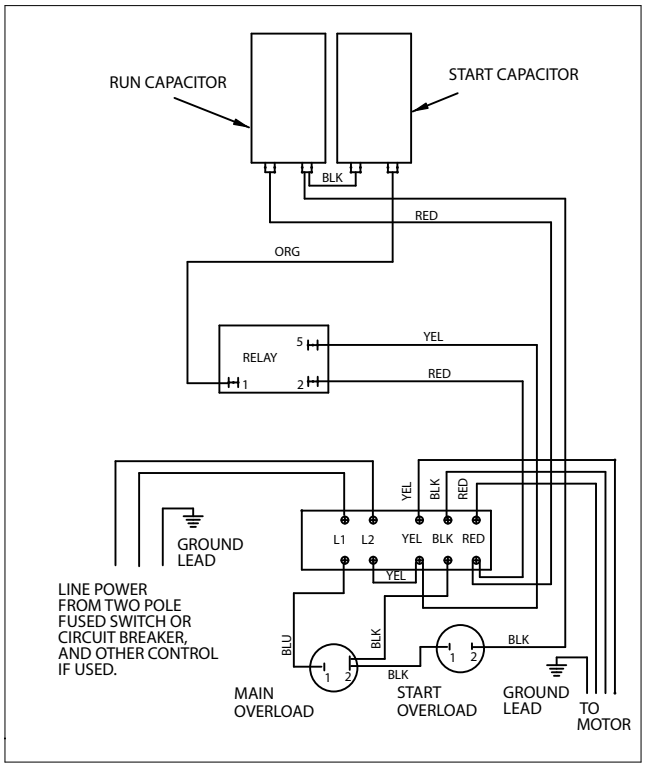

3 hp STANDARD
282 302 8110

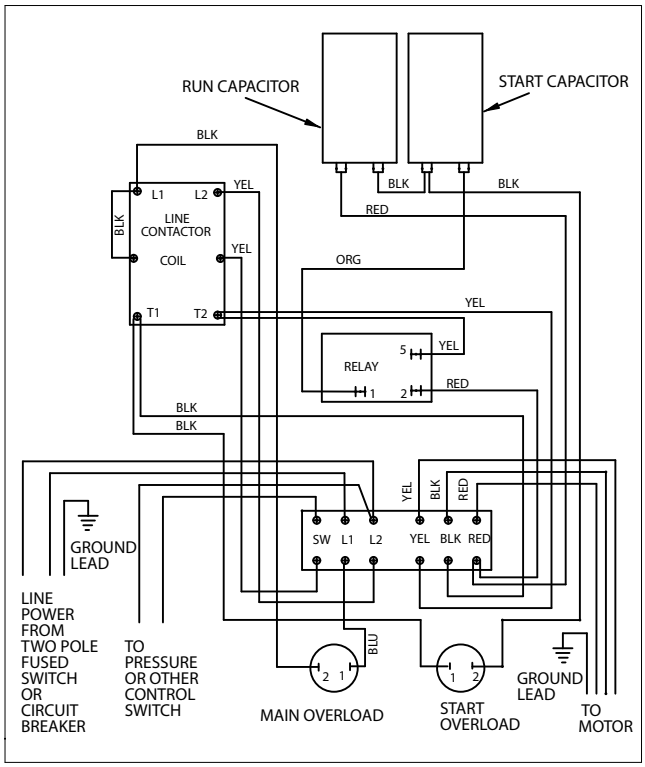

3 hp DELUXE
282 302 8310

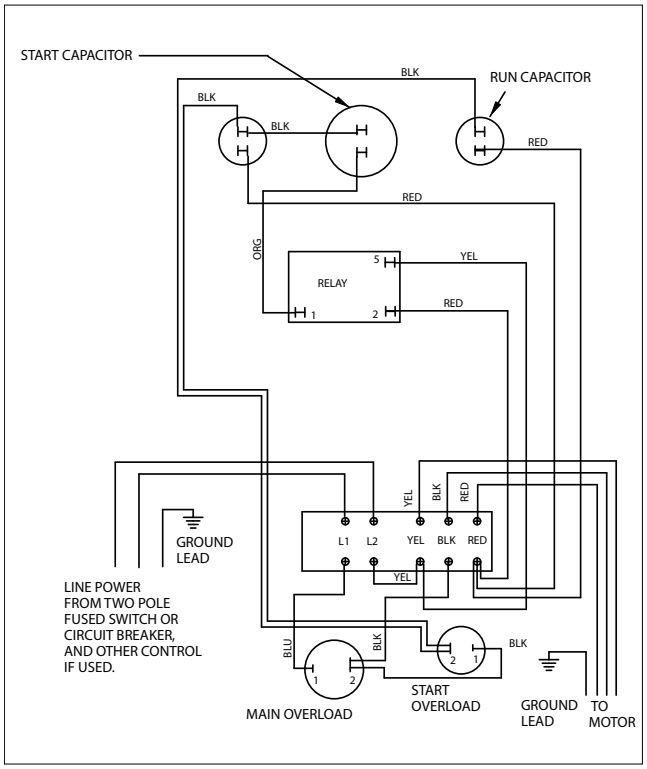

5 hp STANDARD
282 113 8110

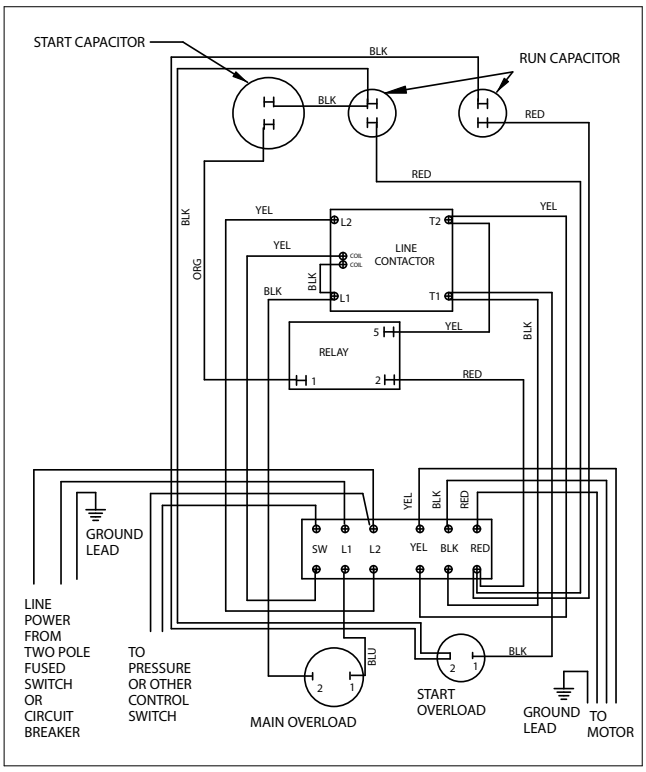

5 hp DELUXE
282 113 8310 or 282 113 9310

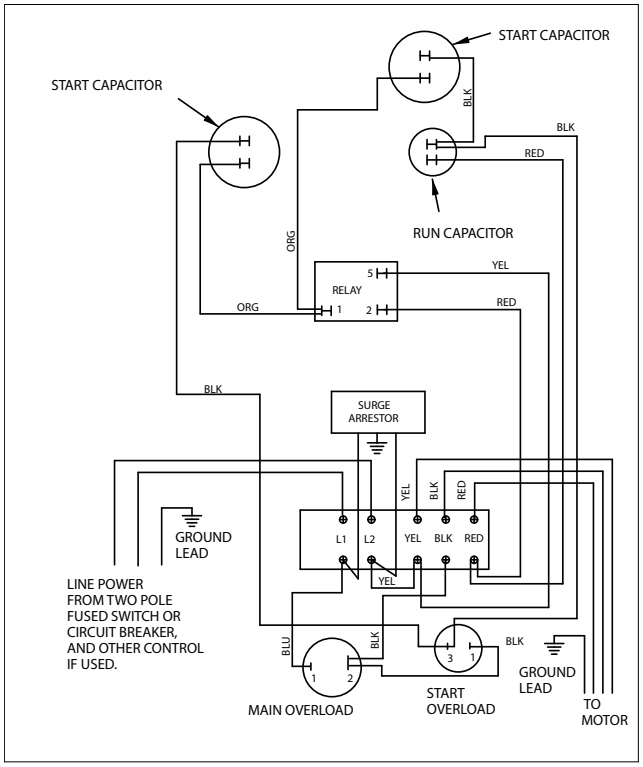

7.5 hp STANDARD
282 201 9210

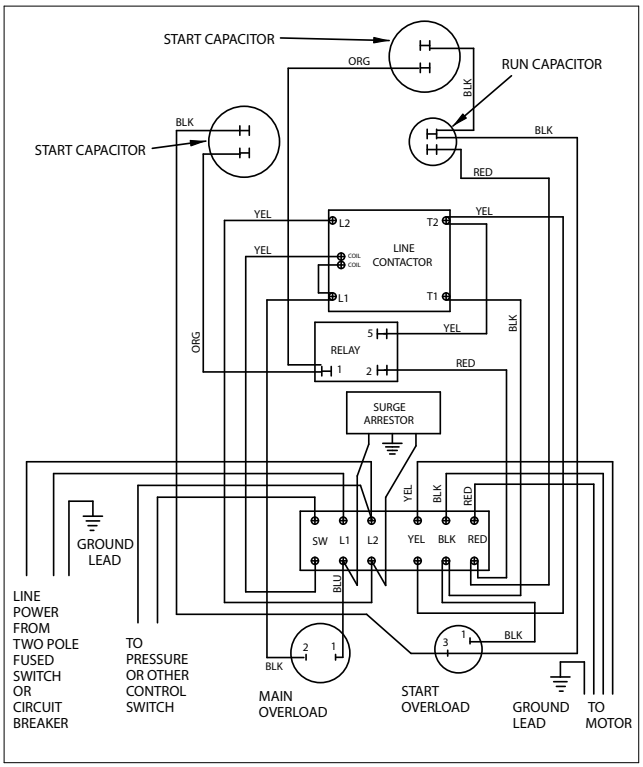

7.5 hp DELUXE
282 201 9310

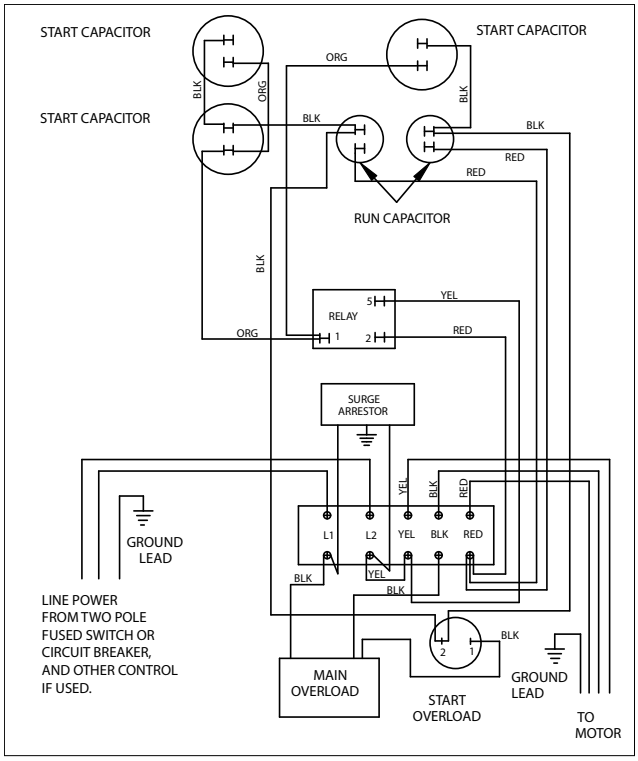

10 hp STANDARD
282 202 9210 or 282 202 9230

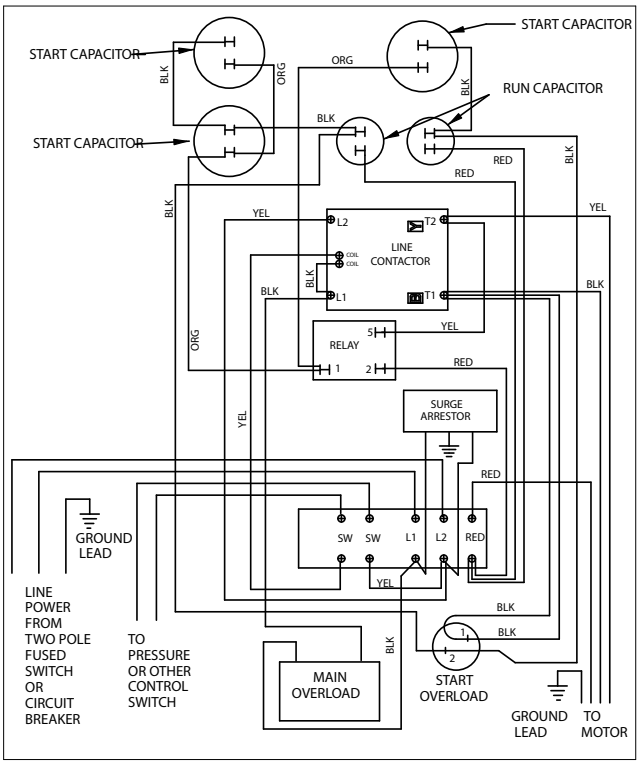

10 hp DELUXE
282 202 9230 or 282 202 9330

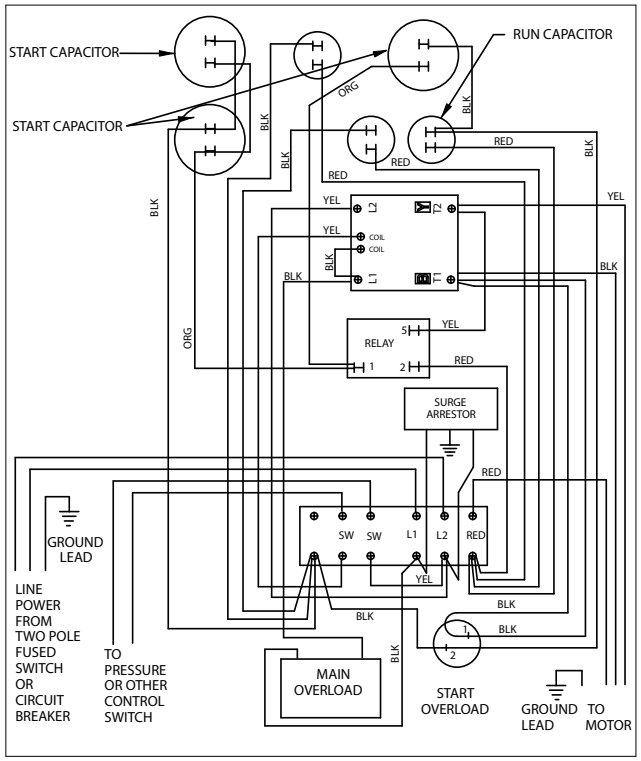

15 hp DELUXE
282 203 9310 or 282 203 9330

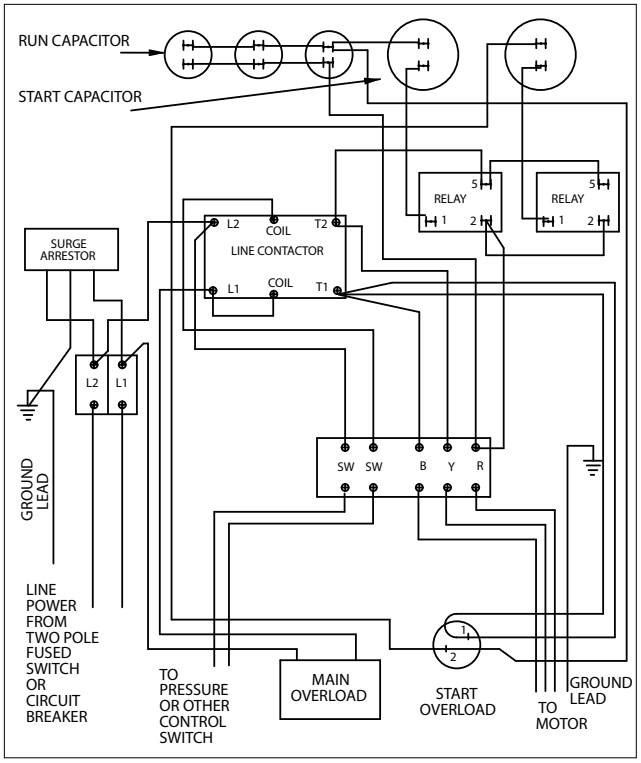

15 hp X-LARGE
282 203 9621

Pumptec-Plus

Pumptec-Plus is a pump/motor protection device designed to work on any 230 V single-phase induction motor (PSC, CSCR, CSIR, and split phase) ranging in size from 1/2 to 5 horsepower. Pumptec-Plus uses a micro-computer to continuously monitor motor power and line voltage to provide protection against dry well, water logged tank, high and low voltage and mud or sand clogging.

Pumptec-Plus – Troubleshooting During Installation

SYMPTOM	POSSIBLE CAUSE	SOLUTION
Unit Appears Dead (No Lights)	No Power to Unit	Check wiring. Power supply voltage should be applied to L1 and L2 terminals of the Pumptec-Plus. In some installations the pressure switch or other control devices is wired to the input of the Pumptec-Plus. Make sure this switch is closed.
Flashing Yellow Light	Unit Needs to Be Calibrated	Pumptec-Plus is calibrated at the factory so that it will overload on most pump systems when the unit is first installed. This overload condition is a reminder that the Pumptec-Plus unit requires calibration before use. See step 7 of the installation instructions.
	Miscalibrated	Pumptec-Plus should be calibrated on a full recovery well with the maximum water flow. Flow restrictors are not recommended.
Flashing Yellow Light During Calibration	2-Wire Motor	Step C of the calibration instructions indicate that a flashing green light condition will occur 2 to 3 seconds after taking the SNAPSHOT of the motor load. On some two-wire motors the yellow light will flash instead of the green light. Press and release the reset button. The green should start flashing.
Flashing Red and Yellow Lights	Power Interruption	During the installation of Pumptec-Plus power may be switched on and off several times. If power is cycled more than four times within a minute Pumptec-Plus will trip on rapid cycle. Press and release the reset button to restart the unit.
	Float Switch	A bobbing float switch may cause the unit to detect a rapid cycle condition on any motor or an overload condition on two-wire motors. Try to reduce water splashing or use a different switch.
Flashing Red Light	High Line Voltage	The line voltage is over 253 volts. Check line voltage. Report high line voltage to the power company.
	Unloaded Generator	If you are using a generator the line voltage may become too high when the generator unloads. Pumptec-Plus will not allow the motor to turn on again until the line voltage returns to normal. Overvoltage trips will also occur if line frequency drops too far below 60 Hz.
Solid Red Light	Low Line Voltage	The line voltage is below 207 volts. Check line voltage.
	Loose Connections	Check for loose connections which may cause voltage drops.
	Loaded Generator	If you are using a generator the line voltage may become too low when the generator loads. Pumptec-Plus will trip on undervoltage if the generator voltage drops below 207 volts for more than 2.5 seconds. Undervoltage trips will also occur if the line frequency rises too far above 60 Hz.

Pumptec-Plus

Pumptec-Plus - Troubleshooting After Installation

SYMPTOM	POSSIBLE CAUSE	SOLUTION
Solid Yellow Light	Dry Well	Wait for the automatic restart timer to time out. During the time out period the well should recover and fill with water. If the automatic reset timer is set to the manual position, then the reset button must be pressed to reactivate the unit.
	Blocked Intake	Clear or replace pump intake screen.
	Blocked Discharge	Remove blockage in plumbing.
	Check Valve Stuck	Replace check valve.
	Broken Shaft	Replace broken parts.
	Severe Rapid Cycling	Machine gun rapid cycling can cause an underload condition. See flashing red and yellow lights section below.
	Worn Pump	Replace worn pump parts and recalibrate.
Yellow Flashing Light	Stalled Motor	Repair or replace motor. Pump may be sand or mud locked.
	Float Switch	A bobbing float switch can cause two-wire motors to stall. Arrange plumbing to avoid splashing water. Replace float switch.
	Ground Fault	Check insulation resistance on motor and control box cable.
Solid Red Light	Low Line Voltage	The line voltage is below 207 volts. Pumptec-Plus will try to restart the motor every two minutes until line voltage is normal.
	Loose Connections	Check for excessive voltage drops in the system electrical connections (i.e. circuit breakers, fuse clips, pressure switch, and Pumptec-Plus L1 and L2 terminals). Repair connections.
Flashing Red Light	High Line Voltage	The line voltage is over 253 volts. Check line voltage. Report high line voltage to the power company.
Flashing Red and Yellow Lights	Rapid Cycle	The most common cause for the rapid cycle condition is a waterlogged tank. Check for a ruptured bladder in the water tank. Check the air volume control or snifter valve for proper operation. Check setting on the pressure switch and examine for defects.
	Leaky Well System	Replace damaged pipes or repair leaks.
	Stuck Check Valve	Failed valve will not hold pressure. Replace valve.
	Float Switch	Press and release the reset button to restart the unit. A bobbing float switch may cause the unit to detect a rapid cycle condition on any motor or an overload condition on 2-wire motors. Try to reduce water splashing or use a different switch.

QD Pumptec and Pumptec

QD Pumptec and Pumptec are load sensing devices that monitor the load on submersible pumps/motors. If the load drops below a preset level for a minimum of 4 seconds the QD Pumptec or the Pumptec will shut off the motor.

The QD Pumptec is designed and calibrated expressly for use on Franklin Electric 230 V 3-wire motors (1/3 to 1 hp.) The QD Pumptec must be installed in QD relay boxes.

The Pumptec is designed for use on Franklin Electric 2- and 3-wire motors (1/3 to 1.5 hp) 115 and 230 V. The Pumptec is not designed for jet pumps.

QD Pumptec & Pumptec – Troubleshooting

SYMPTOM	CHECKS OR SOLUTION
If the QD Pumptec or Pumptec trips in about 4 seconds with some water delivery.	A. Is the voltage less than 90% of nameplate rating? B. Are the pump and motor correctly matched? C. Is the **QD Pumptec** or **Pumptec** wired correctly? For the **Pumptec** check the wiring diagram and pay special attention to the positioning of the power lead (230 V or 115 V). D. For **QD Pumptec** is your system 230 V 60 Hz or 220 V 50 Hz?
If the QD Pumptec or Pumptec trips in about 4 seconds with no water delivery.	A. The pump may be airlocked. If there ia a check valve on top of the pump, put another section of pipe between the pump and the check valve. B. The pump may be out of water. C. Check the valve settings. The pump may be dead-heading. D. Pump or motor shaft may be broken. E. Motor overload may be tripped. Check the motor current (amperage).
If the QD Pumptec or Pumptec will not timeout and reset.	A. Check switch position on side of circuit board on **Pumptec**. **QD Pumptec** check timer position on top/front of unit. Make sure the switch is not between settings. B. If the reset time switch is set to manual reset (position 0), **QD Pumptec** and **Pumptec** will not reset (turn power off for 5 sec. then back on to reset).
If your pump/motor will not run at all.	A. Check voltage. B. Check wiring. C. Remove the **QD Pumptec** from the control box. Reconnect wires in box to original state. If motor does not run the problem is not **QD Pumptec**. Bypass **Pumptec** by connecting L2 and motor lead with jumper. Motor should run. If not, the problem is not **Pumptec**. D. On **Pumptec** only check that **Pumptec** is installed between the control switch and the motor.
If your QD Pumptec or Pumptec will not trip when the pump breaks suction.	A. Be sure you have a Franklin motor. B. Check wiring connections. On **Pumptec** is lead power (230 V or 115 V) connected to correct terminal? Is motor lead connected to correct terminal? C. Check for ground fault in the motor and excessive friction in the pump. D. The well may be “gulping” enough water to keep **QD Pumptec** or **Pumptec** from tripping. It may be necessary to adjust the **QD Pumptec** or the **Pumptec** for these extreme applications. Call the Franklin Electric Service Hotline at 800-348-2420 for information. E. On **Pumptec** applications does the control box have a run capacitor? If so, **Pumptec** will not trip. (Except for Franklin 1.5 hp motors).
If your QD Pumptec or Pumptec chatters when running.	A. Check for low voltage. B. Check for waterlogged tank. Rapid cycling for any reason can cause the **QD Pumptec** or the **Pumptec** relay to chatter. C. On **Pumptec** make sure the L2 and motor wires are installed correctly. If they are reversed, the unit can chatter.

SubDrive2W, 75, 100, 150, 300, MonoDrive, & MonoDrive XT

The Franklin Electric SubDrive/MonoDrive Constant Pressure controller is a variable-speed drive that delivers water at a constant pressure.

WARNING: Serious or fatal electrical shock may result from failure to connect the motor, SubDrive/MonoDrive Controller, metal plumbing and all other metal near the motor or cable to the power supply ground terminal using wire no smaller than motor cable wires. To reduce the risk of electrical shock, disconnect power before working on or around the water system. Capacitors inside the SubDrive/MonoDrive Controller can still hold a lethal voltage even after power has been removed. Allow 10 minutes for dangerous internal voltage to discharge. Do not use motor in swimming areas.

SubDrive2W, 75, 100, 150, 300, MonoDrive, & MonoDrive XT

SubDrive/MonoDrive Troubleshooting

Should an application or system problem occur, built-in diagnostics will protect the system. The “FAULT” light or digital display on the front of the SubDrive/MonoDrive Controller will flash a given number of times or display a number indicating the nature of the fault. In some cases, the system will shut itself off until corrective action is taken. Fault codes and their corrective actions are listed below. See SubDrive/MonoDrive Installation Manual for installation data.

NUMBER OF FLASHES OR DIGITAL DISPLAY	FAULT	POSSIBLE CAUSE	CORRECTIVE ACTION
1	MOTOR UNDERLOAD	- Overpumped well - Broken shaft or coupling - Blocked screen, worn pump - Air/gas locked pump - SubDrive not set properly for pump end	- Frequency near maximum with less than 65% of expected load, 42% if DIP #3 is “on” - System is drawing down to pump inlet (out of water) - High static, light loading pump - reset DIP switch #3 to “on” for less sensitivity if not out of water - Check pump rotation (SubDrive only) reconnect if necessary for proper rotation - Air/gas locked pump - if possible, set deeper in well to reduce - Verify DIP switches are set properly
2	UNDERVOLTAGE	- Low line voltage - Misconnected input leads	- Line voltage low, less than approximately 150 VAC (normal operating range = 190 to 260 VAC) - Check incoming power connections and correct or tighten if necessary - Correct incoming voltage - check circuit breaker or fuses, contact power company
3	LOCKED PUMP	- Motor and/or pump misalignment - Dragging motor and/or pump - Abrasives in pump	- Amperage above SFL at 10 Hz - Remove and repair or replace as required
4 (MonoDrive & MonoDriveXT only)	INCORRECTLY WIRED	- MonoDrive only - Wrong resistance values on main and start	- Wrong resistance on DC test at start - Check wiring, check motor size and DIP switch setting, adjust or repair as needed
5	OPEN CIRCUIT	- Loose connection - Defective motor or drop cable - Wrong motor	- Open reading on DC test at start. - Check drop cable and motor resistance, tighten output connections, repair or replace as necessary, use “dry” motor to check drive functions, if drive will not run and exhibits underload fault replace drive
6	SHORT CIRCUIT	- When fault is indicated immediately after power-up, short circuit due to loose connection, defective cable, splice or motor	- Amperage exceeded 50 amps on DC test at start or max amps during running - Incorrect output wiring, phase to phase short, phase to ground short in wiring or motor - If fault is present after resetting and removing motor leads, replace drive
	OVER CURRENT	- When fault is indicated while motor is running, over current due to loose debris trapped in pump	- Check pump
7	OVERHEATED DRIVE	- High ambient temperature - Direct sunlight - Obstruction of airflow	- Drive heat sink has exceeded max rated temperature, needs to drop below 85 °C to restart - Fan blocked or inoperable, ambient above 125 °F, direct sunlight, air flow blocked - Replace fan or relocate drive as necessary
8 (SubDrive300 only)	OVER PRESSURE	- Improper pre-charge - Valve closing too fast - Pressure setting too close to relief valve rating	- Reset the pre-charge pressure to 70% of sensor setting. Reduce pressure setting well below relief valve rating. Use next size larger pressure tank. - Verify valve operation is within manufacturer’s specifications. - Reduce system pressure setting to a value less than pressure relief rating.
RAPID	INTERNAL FAULT	- A fault was found internal to drive	- Unit may require replacement. Contact your supplier.
9 (SubDrive2W only)	OVER RANGE (Values outside normal operating range)	- Wrong hp/voltage - Internal fault	- Verify motor hp and voltage - Unit may require replacement. Contact your supplier.

SubMonitor

SubMonitor Troubleshooting

FAULT MESSAGE	PROBLEM/CONDITION	POSSIBLE CAUSE
SF Amps Set Too High	SF Amps setting above 359 Amps.	Motor SF Amps not entered.
Phase Reversal	Reversed incoming voltage phase sequence.	Incoming power problem.
Underload	Normal line current.	Wrong SF Max Amps setting.
	Low line current.	Over pumping well. Clogged pump intake. Closed valve. Loose pump impeller. Broken shaft or coupling. Phase loss.
Overload	Normal line current.	Wrong SF Max Amps setting.
	High line current.	High or low line voltage. Ground fault. Pump or motor dragging. Motor stalled or bound pump.
Overheat	Motor temperature sensor has detected excess motor temperature.	High or low line voltage. Motor is overloaded. Excessive current unbalance. Poor motor cooling. High water temperature. Excessive electrical noise (VFD in close proximity).
Unbalance	Current difference between any two legs exceeds programmed setting.	Phase loss. Unbalanced power supply. Open Delta transformer.
Overvoltage	Line voltage exceeds programmed setting.	Unstable power supply.
Undervoltage	Line voltage below programmed setting.	Poor connection in motor power circuit. Unstable or weak power supply.
False Starts	Power has been interrupted too many times in a 10 second period.	Chattering contacts. Loose connections in motor power circuit. Arcing contacts.

Continued on next page

Subtrol-Plus (Obsolete - See SubMonitor)

Subtrol-Plus - Troubleshooting After Installation

SYMPTOM	POSSIBLE CAUSE OR SOLUTION
Subtrol-Plus Dead	When the Subtrol-Plus reset button is depressed and released, all indicator lights should flash. If line voltage is correct at the Subtrol-Plus L1, L2, L3 terminals and the reset button does not cause lights to flash, Subtrol-Plus receiver is malfunctioning.
Green Off Time Light Flashes	The green light will flash and not allow operation unless both sensor coils are plugged into the receiver. If both are properly connected and it still flashes, the sensor coil or the receiver is faulty. An ohmmeter check between the two center terminals of each sensor coil connected should read less than 1 ohm, or coil is faulty. If both coils check good, receiver is faulty.
Green Off Time Light On	The green light is on and the Subtrol-Plus requires the specified off time before the pump can be restarted after having been turned off. If the green light is on except as described, the receiver is faulty. Note that a power interruption when the motor is running will initiate the delay function.
Overheat Light On	This is a normal protective function which turns off the pump when the motor reaches maximum safe temperatures. Check that amps are within the nameplate maximum on all three lines, and that the motor has proper water flow past it. If overheat trip occurs without apparent motor overheating, it may be the result of an arcing connection somewhere in the circuit or extreme noise interference on the power lines. Check with the power company or Franklin Electric. A true motor overheat trip will require at least five minutes for a motor started cold. If trips do not conform to this characteristic, suspect arcing connections, power line noise, ground fault, or SCR variable speed control equipment.
Overload Light On	This is a normal protective function, protecting against an overload or locked pump. Check the amps in all lines through a complete pumping cycle, and monitor whether low or unbalanced voltage may be causing high amps at particular times. If overload trip occurs without high amps, it may be caused by a faulty rating insert, receiver, or sensor coil. Recheck that the insert rating matches the motor. If it is correct, carefully remove it from the receiver by alternately lifting sides with a knife blade or thin screwdriver, and make sure it has no pins bent over. If the insert is correct and its pins are okay, replace receiver and/or sensor coils.
Underload Light On	This is a normal protective function. A. Make sure the rating insert is correct for the motor. B. Adjusting the underload setting as described to allow the desired range of operating conditions. Note that a DECREASE in underload setting is required to allow loading without trip. C. Check for drop in amps and delivery just before trip, indicating pump breaking suction, and for unbalanced line current. D. With the power turned off, recheck motor lead resistance to ground. A grounded lead can cause underload trip.

Subtrol-Plus (Obsolete - See SubMonitor)

Subtrol-Plus - Troubleshooting After Installation (Continued)

SYMPTOM	POSSIBLE CAUSE OR SOLUTION
Tripped Light On	Whenever the pump is off as a result of Subtrol-Plus protective function, the red tripped light is on. A steady light indicates the Subtrol-Plus will automatically allow the pump to restart as described, and a flashing light indicates repeated trips, requiring manual reset before the pump can be restarted. Any other red light operation indicates a faulty receiver. One-half voltage on 460 V will cause tripped light on.
Control Circuit Fuse Blows	With power turned off, check for a shorted contactor coil or a grounded control circuit lead. The coil resistance should be at least 10 ohms and the circuit resistance to panel frame over 1 megohm. A standard or delay-type 2 amp fuse should be used.
Contactor Will Not Close	If proper voltage is at the control coil terminals when controls are operated to turn the pump on, but the contactor does not close, turn off power and replace the coil. If there is no voltage at the coil, trace the control circuit to determine if the fault is in the Subtrol-Plus receiver, fuse, wiring, or panel operating switches. This tracing can be done by first connecting a voltmeter at the coil terminals, and then moving the meter connections step by step along each circuit to the power source, to determine at which component the voltage is lost. With the Subtrol-Plus receiver powered up, with all leads disconnected from the control terminals and with an ohmmeter set at RX10, measure the resistance between the control terminals. It should measure 100 to 400 ohms. Depress and hold in the reset button. The resistance between the control terminals should measure close to infinity.
Contactor Hums or Chatters	Check that coil voltage is within 10% of rated voltage. If voltage is correct and matches line voltage, turn off power and remove the contactor magnetic assembly and check for wear, corrosion, and dirt. If voltage is erratic or lower than line voltage, trace the control circuit for faults similar to the previous item, but looking for a major drop in voltage rather than its complete loss.
Contactor Opens When Start Switch is Released	Check that the small interlocks switch on the side of the contactor closes when the contactor closes. If the switch or circuit is open, the contactor will not stay closed when the selector switch is in HAND position.
Contactor Closes But Motor Doesn't Run	Turn off power. Check the contactor contacts for dirt, corrosion, and proper closing when the contactor is closed by hand.
Signal Circuit Terminals Do Not Energize	With the Subtrol-Plus receiver powered up and all leads disconnected from the signal terminals, with an 0hmmeter set at RX10, measure the resistance between the signal terminals. Resistance should measure close to infinite. Depress and hold in the reset button. The resistance between the signal terminals should measure 100 to 400 ohms.

Abbreviations

A	Amp or amperage
AWG	American Wire Gauge
BJT	Bipolar Junction Transistor
°C	Degree Celsius
CB	Control Box
CRC	Capacitor Run Control
DI	Deionized
Dv/dt	Rise Time of the Voltage
EFF	Efficiency
°F	Degree Fahrenheit
FDA	Federal Drug Administration
FL	Full Load
ft	Foot
ft-lb	Foot Pound
ft/s	Feet per Second
GFCI	Ground Fault Circuit Interrupter
gpm	Gallon per Minute
HERO	High Efficiency Reverse Osmosis
hp	Horsepower
Hz	Hertz
ID	Inside Diameter
IGBT	Insulated Gate Bipolar Transistor
in	Inch
kVA	Kilovolt Amp
kVAR	Kilovolt Amp Rating
kW	Kilowatt (1000 watts)
L1, L2, L3	Line One, Line Two, Line Three
lb-ft	Pound Feet
L/min	Liter per Minute
mA	Milliamp
max	Maximum
MCM	Thousand Circular Mils
mm	Millimeter
MOV	Metal Oxide Varister
NEC	National Electrical Code
NEMA	National Electrical Manufacturer Association
Nm	Newton Meter
NPSH	Net Positive Suction Head
OD	Outside Diameter
OL	Overload
PF	Power Factor
psi	Pounds per Square Inch
PWM	Pulse Width Modulation
QD	Quick Disconnect
R	Resistance
RMA	Return Material Authorization
RMS	Root Mean Squared
rpm	Revolutions per Minute
SF	Service Factor
SFhp	Service Factor Horsepower
S/N	Serial Number
TDH	Total Dynamic Head
UNF	Fine Thread
V	Voltage
VAC	Voltage Alternating Current
VDC	Voltage Direct Current
VFD	Variable Frequency Drive
W	Watts
XFMR	Transformer
Y-D	Wye-Delta
Ω	ohms

Notes

Notes

Notes

Notes

TOLL FREE HELP FROM A FRIEND

800-348-2420 • 260-827-5102 (fax)

Phone Franklin's toll free SERVICE HOTLINE for answers to your pump and motor installation questions. When you call, a Franklin expert will offer assistance in troubleshooting and provide immediate answers to your system application questions. Technical support is also available online. Visit our website at:

www.franklin-electric.com

Franklin Electric

The Company You Trust Deep Down

M1311 07.11

SMVector NEMA1 | Standard Duty Inverter

Lenze

RoHS COMPLIANT

World Class Control

Modes of Operation
- Open Loop Flux Vector, Speed or Torque Control with/without Auto Tuning
- V/Hz (Constant or Variable)
- Base Frequency Adjustable to Motor Specs
- Enhanced V/Hz with Auto-tuning

Acceleration/Deceleration Profiles
- Two Independent Accel Ramps
- Two Independent Decel Ramps
- Linear, S-Type
- Auxiliary Ramp(or Coast)-to-Stop

Fixed Accel Boost for Improved Starting

500 Hz Output Frequency

High Carrier (PWM Sine-Coded) Frequency
- 4, 6, 8, 10 kHz

Universal Logic Assertion (Selectable)
- Positive or Negative Logic Input
- Digital Reference Available

Braking Functions
- DC Injection Braking
- Optional Dynamic Braking
- Flux Braking w/ Adjustable Flux Level & Decel Time

Speed Commands
- Keypad, Potentiometer
- Jog, 8 Preset Speeds
- Floating Point Control
- Sequencer, 16 Segments
- Voltage: Scalable 0 –10 VDC
- Current: Scalable 4 – 20 mA

Process Control
- PID Modes: Direct and Reverse Acting
- PID Sleep Mode w/ Adjustable Recovery Threshold
- Analog Output (Speed, Load, Torque, kW)
- Network Speed (Baud Rate)
- Terminal and Keypad Status
- Elapsed Run or Power On Time (Hours)

Status Outputs
- Programmable Form “A” Relay Output
- Programmable Open Collector Output
- Scalable 0-10 VDC / 2-10 VDC Analog Output
- 4-20mA w/500 Ohm Total Impedance

Environment

Ambient Temperature

-10 to 55°C

Derate 2.5% per °C Above 40°C

Comprehensive Diagnostic Tools

Real Time Monitoring
- 8 Register Fault History
- Software Version
- Drive Network ID
- DC Bus Voltage (V)
- Motor Voltage (V)
- Output Current (%)
- Motor Current (A)
- Motor Torque (%)
- Power (kW)
- Energy Consumption (kWh)
- Heatsink Temperature (°C)
- 0 – 10 VDC Input (User Defined)
- 4 – 20 mA Input (User Defined)
- PID Feedback (User Defined)

Vigilant System Protection

Voltage Monitoring
- Low and High DC Bus V Protection
- Low Line V Compensation

Current Monitoring
- Motor Overload Protection
- Current Limiting Safeguard
- Ground Fault
- Short Circuit Protection

Four ReStarts
- Three Flying and One Auto
- User Enabled

Loss of Follower Management
- Protective Fault
- Go to Preset Speed or Preset Setpoint
- Initiate System Notification

Over Temperature Protection

International Voltages

+10/-15% Tolerance

120/240V, 1Ø

200/240V, 1 or 3Ø

200/240V, 3Ø

400/480V, 3Ø

480/600V, 3Ø

Global Standards

UL	GOST
cUL	C-Tick

CE Low Voltage (EN61800-5-1)

CE EMC (EN61800-3) with optional EMC filter

Keypad & Display

Simple Six Button Programming
- Start
- Stop
- Forward/Reverse
- Scroll Up
- Scroll Down
- Enter/Mode

Informative LED Display

Vivid Illumination

Easily Read from a Distance

Five Status LEDs
- Run
- Automatic Speed mode
- Manual Speed Mode
- Forward Rotation
- Reverse Rotation

Status Display
- Motor Status
- Fault Management
- Operational Information

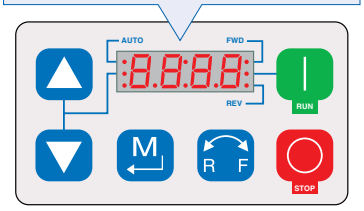

NEMA1 (Up to 10HP) Keypad

NEMA1 (15HP and greater) Keypad

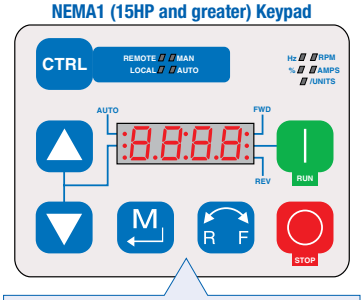

Additional CTRL Button

Switch between control modes
- Local-Manual
- Local Auto
- Remote-Manual
- Remote Auto

Additional LED Indicators

Define the units being displayed
- Hz
- RPM
- %
- Amps
- /Units

Control Terminals

Digital Inputs
- Dedicated Start/Stop
- (3) Programmable

Digital Outputs
- Form “A” Relay
- Open Collector

Analog Inputs
- 0 - 10 VDC
- 4 - 20 mA

Analog Outputs
- 0 - 10 VDC
- 2 - 10 VDC

Power Supplies
- 10 VDC Potentiometer Ref
- 12 VDC, 20 mA DI Ref or 0VDC Com
- 12 VDC, 50 mA Supply

Common

Additional Control Terminals (15 HP & up)

1 Programmable Digital Input

1 Common

RS-485 Modbus Communications
- TXA
- TXB

Lenze Americas • 630 Douglas Street • Uxbridge, MA 01569 • USA • Sales 800 217-9100 • Service 508 278-9100 • www.lenzeamericas.com

Lenze SMVector NEMA1 | Standard Duty Inverter

Ratings

120/240V* - 1Ø Input (3Ø Output)

Power		Output Current	NEMA1	
Hp	kW	I_N [A]	Model	Size
0.33	0.25	1.7	ESV251N01SXB	G1
0.5	0.37	2.4	ESV371N01SXB	G1
1	0.75	4.2	ESV751N01SXB	G1
1.5	1.1	6.0	ESV112N01SXB	G2

*120/240V models provide 0-230V output even with 120V input applied.

200/240V - 1 or 3Ø Input (3Ø Output)

Power		Output Current	NEMA1	
Hp	kW	I_N [A]	Model	Size
0.33	0.25	1.7	ESV251N02SXB***	G1
0.5	0.37	2.4	ESV371N02YXB	G1
1	0.75	4.2	ESV751N02YXB	G1
1.5	1.1	6.0	ESV112N02YXB	G2
2	1.5	7.0	ESV152N02YXB	G2
3	2.2	9.6	ESV222N02YXB	G2

***Model ESV251N02SXB is single-phase input only.

200/240V - 3Ø Input (3Ø Output)

Power		Output Current	NEMA1	
Hp	kW	I_N [A]	Model	Size
1.5	1.1	6.0	ESV112N02TXB	G2
2	1.5	7.0	ESV152N02TXB	G2
3	2.2	9.6	ESV222N02TXB	G2
5	4	16.5	ESV402N02TXB	G3
7.5	5.5	23	ESV552N02TXB	H1
10	7.5	29	ESV752N02TXB	H1
15	11	42	ESV113N02TXB	J1
20	15	54	ESV153N02TXB	J1

400/480V - 3Ø Input (3Ø Output)

Power		Output Current	NEMA1	
Hp	kW	I_N [A]	Model	Size
0.5	0.37	1.3/1.1	ESV371N04TXB	G1
1	0.75	2.4/2.1	ESV751N04TXB	G1
1.5	1.1	3.5/3.0	ESV112N04TXB	G2
2	1.5	4.0/3.5	ESV152N04TXB	G2
3	2.2	5.5/4.8	ESV222N04TXB	G2
5	4	9.4/8.2	ESV402N04TXB	G3
7.5	5.5	12.6/11	ESV552N04TXB	H1
10	7.5	16.1/14	ESV752N04TXB	H1
15	11	24/21	ESV113N04TXB	J1
20	15	31/27	ESV153N04TXB	J1
25	18.5	39/34	ESV183N04TXB	J1
30	22	46/40	ESV223N04TXB	J1
40	30	60/52	ESV303N04TXB	K1
50	37.5	75/65	ESV373N04TXB	K2
60	45	88/77	ESV453N04TXB	K3

600V - 3Ø Input (3Ø Output)

Power		Output Current	NEMA1	
Hp	kW	I_N [A]	Model	Size
1	0.75	1.7	ESV751N06TXB	G1
2	1.5	2.7	ESV152N06TXB	G2
3	2.2	3.9	ESV222N06TXB	G2
5	4	6.1	ESV402N06TXB	G3
7.5	5.5	9	ESV552N06TXB	H1
10	7.5	11	ESV752N06TXB	H1
15	11	17	ESV113N06TXB	J1
20	15	22	ESV153N06TXB	J1
25	18.5	27	ESV183N06TXB	J1
30	22	32	ESV223N06TXB	J1
40	30	41	ESV303N06TXB	K1
50	37.5	52	ESV373N06TXB	K2
60	45	62	ESV453N06TXB	K3

Dimensions

Dimensions

	H		W		D	
	in.	*mm*	*in.*	*mm*	*in.*	*mm*
G1	7.50	190	3.90	99	4.40	111
G2	7.60	191	3.90	99	5.50	138
G3	7.60	191	3.90	99	5.80	147
H1	9.90	250	5.20	130	6.30	160
J1	12.50	318	7.00	176	8.10	205
K1	14.19	360	8.72	221	10.07	256
K2	17.19	436	8.72	221	10.07	256
K3	20.19	513	8.72	221	10.07	256

SMV NEMA 1 (IP31)

Bottom Entry with IP21 Finger Guard

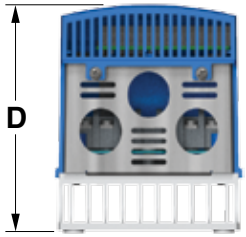

Bottom Entry with NEMA 1 (IP31) Steel Conduit Plate

Options

Communication Modules *

Item Number	Item Description
ESVZAC0	CANopen Communications Interface Module
ESVZAR0	RS-485/Modbus Communications Interface Module
ESVZAP0	PROFIBUS DP Communications Interface Module
ESVZAD0	DeviceNet Communications Interface Module
ESVZAE0	EtherNet/IP Communications Interface Module

* Only one Communication module can be installed and used at a time.

Keypad

ESVZXK1	Remote Keypad w/ drive interface module & cable up to 10HP (7.5kW)
ESVZXH0	Remote Keypad w/ cable 15HP (11kW) and up

Additional I/O **

ESVZAL0	Additional Form C Relay Output Module
ESVZAL1	Additional I/O Module w/ 1 Form C Relay Output and 2 Digital Inputs

** Additional I/O modules cannot be used with Communication modules or Remote keypad ESVZXK1.

Dynamic Braking Modules with Built-in Resistors

		Motor Voltage		
HP	(kW)	208 to 230 V Part Number	400 to 480 V Part Number	480 to 600 V Part Number
0.33 - 0.5	(0.25-0.37)	EZXDB3712A1	EZXDB3714A1	N/A
1 - 1.5	(0.75 - 1.1)	EZXDB1122A1	EZXDB1124A1	EZXDB1126A1
2 - 3	(1.5 - 2.2)	EZXDB2222A1	EZXDB2224A1	EZXDB2226A1
5	(4)	EZXDB4022A1	EZXDB4024A1	EZXDB4026A1
7.5	(5.5)	EZXDB5522A1	EZXDB5524A1	EZXDB5526A1
10	(7.5)	EZXDB7522A1	EZXDB7524A1	EZXDB7526A1

Dynamic Braking Modules without Built-in Resistors

15 - 20	(11 - 15)	EZXDC1532A1	N/A	N/A
15 - 30	(11 - 22)	N/A	EZXDC2234A1	EZXDC2236A1

Open Dynamic Braking Resistors with mounting brackets

15 - 20	(11 - 15)	841-009	841-009	841-010
25 - 30	(18.5 - 22)	N/A	841-011	841-012

Lenze
AC Tech

SMVector - Frequency Inverter

Operating Instructions

Contents

1 Safety Information ... 3

2 Technical Data ... 6

2.1 Standards and Application Conditions ... 6
2.2 SMV Type Number Designation ... 7
2.3 Ratings ... 8

3 Installation ... 11

3.1 Dimensions and Mounting ... 11
3.1.1 NEMA 1 (IP31) Models ≤ 30HP (22kW) ... 11
3.1.2 NEMA 1 (IP31) Models > 30HP (22kW) ... 12
3.1.3 NEMA 4X (IP65) Models ... 13
3.1.4 NEMA 4X (IP65) Models with Disconnect Switch ... 14
3.2 Electrical Installation ... 15
3.2.1 Power Connections ... 15
3.2.1.1 Mains Connection to 120VAC Single-Phase Supply ... 15
3.2.1.2 Mains Connection to 240VAC Single-Phase Supply ... 16
3.2.1.3 Mains Connection to Three-Phase Supply ... 16
3.2.1.4 Motor Connection ... 16
3.2.1.5 Installation Recommendations for EMC Compliance ... 17
3.2.1.6 NEMA 4X (IP65) Input Terminal Block ... 17
3.2.1.7 Dynamic Brake Connections ... 18
3.2.2 Fuses/Cable Cross-Sections ... 19
3.2.3 Control Terminals ... 20

4 Commissioning ... 22

4.1 Local Keypad & Display ... 22
4.2 Drive Display and Modes of Operation ... 24
4.3 Parameter Setting ... 25
4.4 Electronic Programming Module (EPM) ... 25
4.5 Parameter Menu ... 26
4.5.1 Basic Setup Parameters ... 26
4.5.2 I/O Setup Parameters ... 30
4.5.3 Advanced Setup Parameters ... 34
4.5.4 PID Parameters ... 38
4.5.5 Vector Parameters ... 40
4.5.6 Network Parameters ... 42
4.5.7 Diagnostic Parameters ... 43
4.5.7.1 Terminal & Protection Status Display ... 44
4.5.7.2 Keypad Status Display ... 44
4.5.8 Onboard Communications Parameters 15-60HP (11-45kW) ... 45
4.5.9 Sequencer Parameters ... 46
4.5.9.1 Sequencer Flow Diagram Left ... 54
4.5.9.2 Sequencer Flow Diagram Right ... 55
4.5.9.3 Sequencer Status ... 56

5 Troubleshooting and Diagnostics ... 57

5.1 Status/Warning Messages ... 57
5.2 Drive Configuration Messages ... 58
5.3 Fault Messages ... 58

Appendix A ... 61

A.1 Permissable Cable Lengths ... 61

About These Instructions

This documentation applies to the SMV frequency inverter and contains important technical data regarding the installation, operation, and commissioning of the inverter.

These instructions are only valid for SMV frequency inverters with software revision 4.23 or higher
For version 4.23 software, the drive nameplate illustrated below would show “42” in the “F” location.

Please read these instructions in their entirety before commissioning the drive.

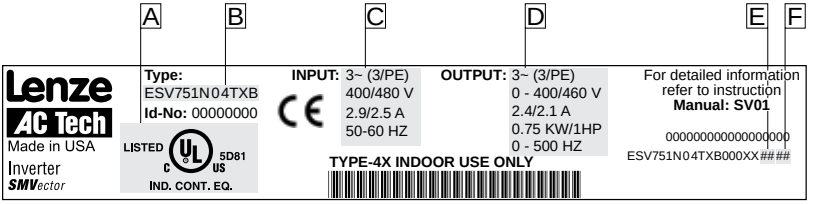

A	B	C	D	E	F
Certifications	Type	Input Ratings	Output Ratings	Hardware Version	Software Version

Scope of delivery	Important
• 1 SMV Inverter with EPM installed (see Section 4.4) • 1 Operating Instructions manual	After receipt of the delivery, check immediately whether the items delivered match the accompanying papers. Lenze AC Tech does not accept any liability for deficiencies claimed subsequently. Claim: • visible transport damage immediately to the forwarder. • visible deficiencies /incompleteness immediately to your Lenze AC Tech representative

Related Documents

The documentation listed herein contains information relevant to the operation of the SMVector frequency inverter. To obtain the latest documentation, visit the Technical Library at http://www.lenzeamericas.com.

Document #	Description
CMVINS01	SMVector Communications Module Installation Instruction
CMVMB401	SMVector ModBus RTU over RS485 Communications Reference Guide
CMVLC401	SMVector Lecom Communications Reference Guide
CMVCAN01	SMVector CANopen Communications Reference Guide
CMVDVN01	SMVector DeviceNet Communications Reference Guide
CMVETH01	SMVector EtherNet/IP Communications Reference Guide
CMVPFB01	SMVector PROFIBUS Communications Reference Guide
ALSV01	SMVector Additional I/O Module Installation and Operation Manual
DBV01	SMVector Dynamic Braking
PTV01	SMVector Potentiometer Install Instructions
RKV01	SMVector ESVZXK1 Remote Keypad
RKVU01	SMVector ESVZXH0 Remote Keypad (for NEMA 1 15-60HP (11-45kW) Drives)

Copyright © 2006 Lenze AC Tech Corporation

All rights reserved. No part of this manual may be reproduced or transmitted in any form without written permission from Lenze AC Tech Corporation. The information and technical data in this manual are subject to change without notice. Lenze AC Tech Corporation makes no warranty of any kind with respect to this material, including, but not limited to, the implied warranties of its merchantability and fitness for a given purpose. Lenze AC Tech Corporation assumes no responsibility for any errors that may appear in this manual.

All information given in this documentation has been carefully selected and tested for compliance with the hardware and software described. Nevertheless, discrepancies cannot be ruled out. Lenze AC Tech does not accept any responsibility nor liability for damages that may occur. Any necessary corrections will be implemented in subsequent editions. This document is printed in the United States

1 Safety Information

General

Some parts of Lenze AC Tech controllers can be electrically live and some surfaces can be hot. Non-authorized removal of the required cover, inappropriate use, and incorrect installation or operation creates the risk of severe injury to personnel and/or damage to equipment.

All operations concerning transport, installation, and commissioning as well as maintenance must be carried out by qualified, skilled personnel who are familiar with the installation, assembly, commissioning, and operation of variable frequency drives and the application for which it is being used.

Installation

Ensure proper handling and avoid excessive mechanical stress. Do not bend any components and do not change any insulation distances during transport, handling, installation or maintenance. Do not touch any electronic components or contacts. This drive contains electrostatically sensitive components, which can easily be damaged by inappropriate handling. Static control precautions must be adhered to during installation, testing, servicing and repairing of this drive and associated options. Component damage may result if proper procedures are not followed.

To ensure proper operation, do not install the drive where it is subjected to adverse environmental conditions such as combustible, oily, or hazardous vapors; corrosive chemicals; excessive dust, moisture or vibration; direct sunlight or extreme temperatures.

This drive has been tested by Underwriters Laboratory (UL) and is UL Listed in compliance with the UL508C Safety Standard. This drive must be installed and configured in accordance with both national and international standards. Local codes and regulations take precedence over recommendations provided in this and other Lenze AC Tech documentation.

The SMVector drive is considered a component for integration into a machine or process. It is neither a machine nor a device ready for use in accordance with European directives (reference machinery directive and electromagnetic compatibility directive). It is the responsibility of the end user to ensure that the machine meets the applicable standards.

Electrical Connection

When working on live drive controllers, applicable national safety regulations must be observed. The electrical installation must be carried out according to the appropriate regulations (e.g. cable cross-sections, fuses, protective earth [PE] connection). While this document does make recommendations in regards to these items, national and local codes must be adhered to.

The documentation contains information about installation in compliance with EMC (shielding, grounding, filters and cables). These notes must also be observed for CE-marked controllers. The manufacturer of the system or machine is responsible for compliance with the required limit values demanded by EMC legislation.

Application

The drive must not be used as a safety device for machines where there is a risk of personal injury or material damage. Emergency Stops, over-speed protection, acceleration and deceleration limits, etc must be made by other devices to ensure operation under all conditions.

The drive does feature many protection devices that work to protect the drive and the driven equipment by generating a fault and shutting the drive and motor down. Mains power variances can also result in shutdown of the drive. When the fault condition disappears or is cleared, the drive can be configured to automatically restart, it is the responsibility of the user, OEM and/or integrator to ensure that the drive is configured for safe operation.

Explosion Proof Applications

Explosion proof motors that are not rated for inverter use lose their certification when used for variable speed. Due to the many areas of liability that may be encountered when dealing with these applications, the following statement of policy applies:

Lenze AC Tech Corporation inverter products are sold with no warranty of fitness for a particular purpose or warranty of suitability for use with explosion proof motors. Lenze AC Tech Corporation accepts no responsibility for any direct, incidental or consequential loss, cost or damage that may arise through the use of AC inverter products in these applications. The purchaser expressly agrees to assume all risk of any loss, cost or damage that may arise from such application.

Operation

Systems including controllers must be equipped with additional monitoring and protection devices according to the corresponding standards (e.g. technical equipment, regulations for prevention of accidents, etc.). The controller may be adapted to your application as described in this documentation.

DANGER!

- After the controller has been disconnected from the supply voltage, live components and power connection must not be touched immediately, since capacitors could be charged. Please observe the corresponding notes on the controller.
- Close all protective covers and doors prior to and during operation.
- Do not cycle input power to the controller more than once every two minutes.
- For SMVector models that are equipped with a Disconnect Switch (11th character in model number is L or M), the Disconnect Switch is intended as a motor service disconnect and does not provide branch circuit protection to the inverter or motor. When servicing the motor, it is necessary to wait 3 minutes after turning this switch to the off position before working on motor power wiring as the inverter stores electrical power. To service the inverter, it is necessary to remove mains ahead of the drive and wait 3 minutes.

Safety Notifications

All safety information given in these Operating Instructions includes a visual icon, a bold signal word and a description.

Signal Word! (characterizes the severity of the danger)

NOTE (describes the danger and informs on how to proceed)

Icon	Signal Word	Meaning	Consequences if ignored
	DANGER!	Warns of hazardous electrical voltage.	Death or severe injuries.
	WARNING!	Warns of potential, very hazardous situations.	Risk of severe injury to personnel and/or damage to equipment.
	WARNING! Hot Surface	Warns of hot surface and risk of burns. Labels may be on or inside the equipment to alert people that surfaces may reach dangerous temperatures.	Risk of severe injury to personnel.
	STOP!	Warns of potential damage to material and equipment.	Damage to the controller/drive or its environment.
	NOTE	Designates a general, useful note.	None. If observed, then using the controller/ drive system is made easier.

Harmonics Notification in accordance with EN 61000-3-2, EN 61000-3-12:

Operation in public supply networks (Limitation of harmonic currents i.a.w. EN 61000-3-2, Electromagnetic Compatibility (EMC) Limits). Limits for harmonic current emissions (equipment input current up to 16A/phase).

Directive	Total Power connected to Mains (public supply)	Additional Measures Required for Compliance (2)
EN 61000-3-2	< 0.5kW	with mains choke
	0.5 ... 1kW	with active filter
	> 1kW	complies without additional measures
EN 61000-3-12	16 ... 75amp	Additional measures are required for compliance with the standard

(1) For compliance with EMC regulations, the permissable cable lengths may change.

(2) The additional measures described only ensure that the controller meets the requirements of the EN 61000-3-2. The machine/system manufacturer is responsible for the machine's compliance with the regulations.

Safety Information in accordance with EN 61800-5-1:

DANGER! Hazard of Electrical Shock
Capacitors retain charge for approximately 180 seconds after power is removed. Allow at least 3 minutes for discharge of residual charge before touching the drive.

WARNING!
- This product can cause a d.c. current in the PE conductor. Where a residual current-operated (RCD) or monitoring (RCM) device is used for protection in case of direct or indirect contact, only an RCD or RCM Type B is allowed on the supply side of this product.
- Leakage Current may exceed 3.5mA AC. The minimum size of the PE conductor shall comply with local safety regulations for high leakage current equipment.
- In a domestic environment, this product may cause radio interference in which case supplementary mitigation measures may be required.

NOTE
Control and communications terminals provide **reinforced insulation** (i.e. considered SELV or PELV, providing protection in case of direct contact) when the drive is connected to a power system rated up to 300VAC between phase to ground (PE) and the applied voltage on Terminals 16 and 17 is less than 150VAC between phase to ground. Otherwise, control and communications terminals provide **basic insulation**.

Safety Information in accordance with UL:

Note for UL approved system with integrated controllers: UL warnings are notes which apply to UL systems. The documentation contains special information about UL.

c UL us
Warnings!

- Suitable for use on a circuit capable of delivering not more than 200,000 rms symmetrical amperes, at the maximum voltage rating marked on the drive.
- Use minimum 75 °C copper wire only.
- Shall be installed in a pollution degree 2 macro-environment.
- NEMA 1 (IP31) models shall be installed in a pollution degree 2 macro-environment.
- All models are suitable for installation in a compartment handling Conditioned Air (i.e., plenum rated).

Torque Requirements (in accordance with UL) are listed in section 3.2.1, Power Connections.

2 Technical Data

2.1 Standards and Application Conditions

Conformity	CE	Low Voltage (2006/95/EC) & EMC (2004/108/EC) Directives
Approvals	UL508C	Underwriters Laboratories -Power Conversion Equipment
Input voltage phase imbalance	≤ 2%	
Supported Power Systems	TT TN	– For central grounded systems, operation is permitted without restrictions. – For corner grounded 400/500V systems, operation is possible but reinforced insulation to control circuits is compromised.
Humidity	≤ 95% non-condensing	
Temperature range	Transport	-25 … +70°C
	Storage	-20 … +70°C
	Operation	-10 … +55°C (with 2.5%/°C current derating above +40°C)
Installation height	0 - 4000m a.m.s.l.	(with 5%/1000 m current derating above 1000m a.m.s.l.)
Vibration resistance	acceleration resistant up to 1.0g	
⚠ **Earth leakage current**	> 3.5 mA to PE	
Max Permissable Cable Length (1)	<= 4.0 Hp (3.0 kW)	30 meters shielded, 60 meters un-shielded
	=> 5.0 Hp (3.7 kW)	50 meters shielded, 100 meters un-shielded.
Enclosure	IP31/NEMA 1	IP65/NEMA 4X
	NEMA 1 and NEMA 4X model enclosures are plenun rated in accordance with UL 508C and are suitable for installation in a compartment handling conditioned air.	
Protection measures against	short circuit, earth fault, phase loss, over voltage, under voltage, motor stalling, over temperature, motor overload	
Compliance with EN 61000-3-2 Requirements (2)	< 0.5kW	with mains choke
	0.5 ... 1kW	with active filter
	> 1kW	without additional measures
Compliance with EN 61000-3-12 Requirements (2)	16 ... 75amp	Additional measures required for compliance with EN 61000-3-12

Operation in public supply networks (Limitation of harmonic currents i.a.w. EN 61000-3-2, Electromagnetic Compatibility (EMC) Limits). Limits for harmonic current emissions (equipment input current up to 16A/phase).

(1) The stated cable lengths are permissible at default carrier frequencies (refer to parameter P166).

(2) The additional measures described only ensure that the controller meets the requirements of the EN 61000-3-2. The machine/system manufacturer is responsible for the machine's compliance with the regulations.

2.2 SMV Type Number Designation

The table herein describes the Type numbering designation for the SMVector Inverter models.

	ESV	152	N0	2	T	X	B
Electrical Products in the SMVector Series							
Power Rating in kW:							
251 = 0.25kW (0.33HP)	113 = 11.0kW (15HP)						
371 = 0.37kW (0.5HP)	153 = 15.0kW (20HP)						
751 = 0.75kW (1HP)	183 = 18.5kW (25HP)						
112 = 1.1kW (1.5HP)	223 = 22.0kW (30HP)						
152 = 1.5kW (2HP)	303 = 30.0kW (40HP)						
222 = 2.2kW (3HP)	373 = 37.5kW (50HP)						
302 = 3.0kW (4HP)	453 = 45.0kW (60HP)						
402 = 4.0kW (5HP)							
552 = 5.5kW (7.5HP)							
752 = 7.5kW (10HP)							
Installed I/O & Communication Module(s):							
C_ = CANopen (Available all models)	The "_" blank can be:						
D_ = DeviceNet (Available all models)	0 = Standard Keypad						
E_ = Ethernet/IP, (Available all models)							
R_ = RS-485 / ModBus /Lecom (Avail all models)							
P_ = ProfiBus-DP (Available all models)							
N_ = No Communications installed							
Input Voltage:							
1 = 120 VAC (doubler output) or 240 VAC							
2 = 240 VAC							
4 = 400/480 VAC							
6 = 600 VAC							
Input Phase:							
S = Single Phase Input only							
Y = Single or Three Phase Input							
T = Three Phase Input only							
Input Line Filter							
F = Integral EMC Filter							
L = Integral EMC Filter and Integrated Disconnect Switch (NEMA 4X/IP65 Models only)							
M = Integrated Disconnect Switch (NEMA 4X/IP65 Models only)							
X = No EMC Filter/ No Disconnect Switch							
Enclosure:							
B = NEMA 1/IP31; Indoor only							
C = NEMA 4X/IP65; Indoor only; Convection cooled							
D = NEMA 4X/IP65; Indoor only; Fan cooled							
E = NEMA 4X/IP65; Indoor/Outdoor; Convection cooled							
F = NEMA 4X/IP65; Indoor/Outdoor; Fan cooled							

NOTE

Prior to installation make sure the enclosure is suitable for the end-use environment

Variables that influence enclosure suitability include (but are not limited to) temperature, airborne contaminates, chemical concentration, mechanical stress and duration of exposure (sunlight, wind, precipitation).

2.3 Ratings

120V / 240VAC Models

Mains = 120V Single Phase (1/N/PE) (90...132V), 240V Single Phase (2/PE) (170...264V); 48...62Hz									
Type	Power		Mains Current		Output Current		Heat Loss (Watts)		
	Hp	kW	120V A	240V A	Cont (I_n) A	Max I %	N1/IP31	N4X/IP65 No filter	N4X/IP65 W/ filter
ESV251--1S--	0.33	0.25	6.8	3.4	1.7	200	24		
ESV371--1S--	0.5	0.37	9.2	4.6	2.4	200	32	32	
ESV751--1S--	1	0.75	16.6	8.3	4.2	200	52	41	
ESV112--1S--	1.5	1.1	20	10.0	6.0	200	74	74	

NOTES:

Output Current: The Output Current Maximum (%) is a percentage of the Output Current Continuous Amps (In) rating and is adjustable in parameter P171.

240VAC Models

Mains = 240V Single Phase (2/PE) (170...264V); 48...62Hz								
Type	Power		Mains Current	Output Current		Heat Loss (Watts)		
	Hp	kW	240V A	Cont (I_n) A	Max I %	N1/IP31	N4X/IP65 No filter	N4X/IP65 W/ filter
ESV251--2S--	0.33	0.25	3.4	1.7	200	20		
ESV371--2S--	0.5	0.37	5.1	2.4	200			30
ESV751--2S--	1	0.75	8.8	4.2	200			42
ESV112--2S--	1.5	1.1	12.0	6.0	200			63
ESV152--2S--	2	1.5	13.3	7.0	200			73
ESV222--2S--	3	2.2	17.1	9.6	200			97

240V Single Phase (2/PE) (170...264V), 240V Three Phase (3/PE) (170...264V); 48...62Hz									
Type	Power		Mains Current		Output Current		Heat Loss (Watts)		
	Hp	kW	1~ (2/PE) A	3~ (3/PE) A	Cont (I_n) A	Max I %	N1/IP31	N4X/IP65 No filter	N4X/IP65 W/ filter
ESV371--2Y--	0.5	0.37	5.1	2.9	2.4	200	27	26	
ESV751--2Y--	1	0.75	8.8	5.0	4.2	200	41	38	
ESV112--2Y--	1.5	1.1	12.0	6.9	6.0	200	64	59	
ESV152--2Y--	2	1.5	13.3	8.1	7.0	200	75	69	
ESV222--2Y--	3	2.2	17.1	10.8	9.6	200	103	93	

240V Three Phase (3/PE) (170...264V); 48...62Hz								
Type	Power		Mains Current	Output Current		Heat Loss (Watts)		
	Hp	kW	240V A	Cont (I_n) A	Max I %	N1/IP31	N4X/IP65 No filter	N4X/IP65 W/ filter
ESV112--2T--	1.5	1.1	6.9	6	200	64		
ESV152--2T--	2	1.5	8.1	7	200	75		
ESV222--2T--	3	2.2	10.8	9.6	200	103		
ESV402--2T--	5	4.0	18.6	16.5	200	154	139	
ESV552--2T--	7.5	5.5	26	23	200	225	167	
ESV752--2T--	10	7.5	33	29	200	274	242	
ESV113--2T--	15	11	48	42	180	485	468	
ESV153--2T--	20	15	59	54	180	614	591	

NOTES:

Output Current: The Output Current Maximum (%) is a percentage of the Output Current Continuous Amps (In) rating and is adjustable in parameter P171.

400...480VAC Models

400 ... 480V Three Phase (3/PE) (400V: 340...440V), (480V: 340...528V); 48...62Hz											
Type	Power		Mains Current		Output Current				Heat Loss (Watts)		
	Hp	kW	400V A	480V A	Cont (I_n) A		Max I %		N1/IP31	N4X/IP65 No filter	N4X/IP65 W/ filter
					400V	480V	400V	480V			
ESV371--4T--	0.5	0.37	1.7	1.5	1.3	1.1	175	200	23	21	25
ESV751--4T--	1	0.75	2.9	2.5	2.4	2.1	175	200	37	33	37
ESV112--4T--	1.5	1.1	4.2	3.6	3.5	3.0	175	200	48	42	46
ESV152--4T--	2	1.5	4.7	4.1	4.0	3.5	175	200	57	50	54
ESV222--4T--	3	2.2	6.1	5.4	5.5	4.8	175	200	87	78	82
ESV302--4T--	4	3.0	8.3	7.0	7.6	6.3	175	200			95
ESV402--4T--	5	4.0	10.6	9.3	9.4	8.2	175	200	128	103	111
ESV552--4T--	7.5	5.5	14.2	12.4	12.6	11.0	175	200	178	157	165
ESV752--4T--	10	7.5	18.1	15.8	16.1	14.0	175	200	208	190	198
ESV113--4T--	15	11	27	24	24	21	155	180	418	388	398
ESV153--4T--	20	15	35	31	31	27	155	180	493	449	459
ESV183--4T--	25	18.5	44	38	39	34	155	180	645	589	600
ESV223--4T--	30	22	52	45	46	40	155	180	709	637	647
ESV303--4T--	40	30	68	59	60	52	155	180	1020		
ESV373--4T--	50	37.5	85	74	75	65	155	180	1275		
ESV453--4T--	60	45	100	87	88	77	155	180	1530		

NOTES:

Output Current: The Output Current Maximum (%) is a percentage of the Output Current Continuous Amps (In) rating and is adjustable in parameter P171.

For 400...480 VAC models, the output current maximum (%) in the 400V column is used when P107 = 0
For 400...480 VAC models, the output current maximum (%) in the 480V column is used when P107 = 1

600VAC Models

600V Three Phase (3/PE) (425...660V); 48...62Hz								
Type	Power		Mains Current	Output Current		Heat Loss (Watts)		
	Hp	kW	A	Cont (I_n) A	Max I %	N1/IP31	N4X/IP65 No filter	N4X/IP65 W/ filter
ESV751--6T--	1	0.75	2	1.7	200	37	31	
ESV152--6T--	2	1.5	3.2	2.7	200	51	43	
ESV222--6T--	3	2.2	4.4	3.9	200	68	57	
ESV402--6T--	5	4	6.8	6.1	200	101	67	
ESV552--6T--	7.5	5.5	10.2	9	200	148	116	
ESV752--6T--	10	7.5	12.4	11	200	172	152	
ESV113--6T--	15	11	19.7	17	180	380	356	
ESV153--6T--	20	15	25	22	180	463	431	
ESV183--6T--	25	18.5	31	27	180	560	519	
ESV223--6T--	30	22	36	32	180	640	592	
ESV303--6T--	40	30	47	41	180	930		
ESV373--6T--	50	37.5	59	52	180	1163		
ESV453--6T--	60	45	71	62	180	1395		

NOTES:

Output Current: The Output Current Maximum (%) is a percentage of the Output Current Continuous Amps (In) rating and is adjustable in parameter P171.

STOP!

- For installations above 1000m a.m.s.l., derate I_n by 5% per 1000m, do not exceed 4000m a.m.s.l.
- Operation above 40°C, derate I_n by 2.5% per °C, do not exceed 55°C.

Output Current (In) derating for Carrier Frequency (P166) for NEMA 1 (IP31) Models:
- If P166=2 (8 kHz), derate I_n to 92% of drive rating
- If P166=3 (10 kHz), derate I_n to 84% of drive rating

Output Current (In) derating for Carrier Frequency (P166) for NEMA 4X (IP65) Models:
- If P166=1 (6 kHz), derate I_n to 92% of drive rating
- If P166=2 (8 kHz), derate I_n to 84% of drive rating
- If P166=3 (10 kHz), derate I_n to 76% of drive rating

3 Installation

3.1 Dimensions and Mounting

WARNING!
Drives must not be installed where subjected to adverse environmental conditions such as: combustible, oily, or hazardous vapors; corrosive chemicals; excessive dust, moisture or vibration; direct sunlight or extreme temperatures.

3.1.1 NEMA 1 (IP31) Models ≤ 30HP (22kW)

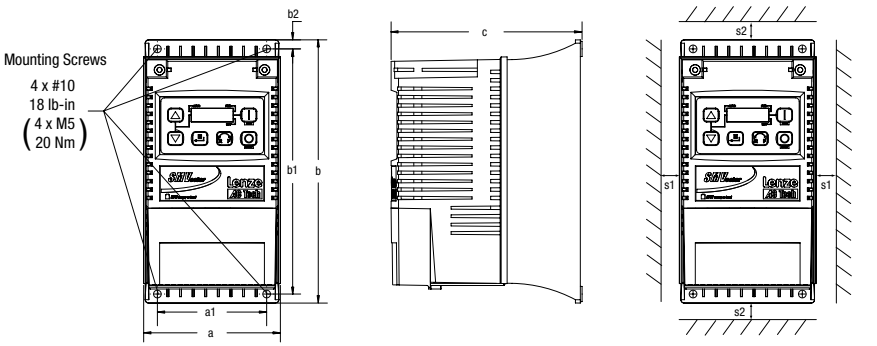

	Type	a in (mm)	a1 in (mm)	b in (mm)	b1 in (mm)	b2 in (mm)	c in (mm)	s1 in (mm)	s2 in (mm)	m lb (kg)
G1	ESV251~~~~~B; ESV371~~~~~B ESV751~~~~~B	3.90 (99)	3.12 (79)	7.48 (190)	7.00 (178)	0.24 (6)	4.35 (111)	0.6 (15)	2.0 (50)	2.0 (0.9)
G2	ESV112~~~~~B; ESV152~~~~~B ESV222~~~~~B	3.90 (99)	3.12 (79)	7.52 (191)	7.00 (178)	0.26 (7)	5.45 (138)	0.6 (15)	2.0 (50)	2.8 (1.3)
G3	ESV402~~~~~B	3.90 (99)	3.12 (79)	7.52 (191)	7.00 (178)	0.30 (8)	5.80 (147)	0.6 (15)	2.0 (50)	3.2 (1.5)
H1	ESV552~~~~~B; ESV752~~~~~B	5.12 (130)	4.25 (108)	9.83 (250)	9.30 (236)	0.26 (7)	6.30 (160)	0.6 (15)	2.0 (50)	6.0 (2.0)
J1	ESV113~~~~~B; ESV153~~~~~B ESV183~~~~~B; ESV223~~~~~B	6.92 (176)	5.75 (146)	12.50 (318)	11.88 (302)	0.31 (8)	8.09 (205)	0.6 (15)	2.0 (50)	13.55 (6.15)

Conduit Hole Dimensions	Type	N in (mm)	P in (mm)	P1 in (mm)	Q in (mm)	S in (mm)
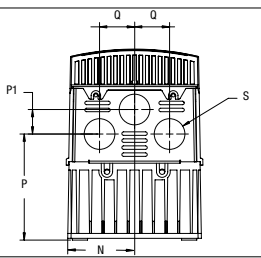	G1	1.84 (47)	1.93 (49)	.70 (18)	1.00 (25)	.88 (22)
	G2	1.84 (47)	3.03 (77)	.70 (18)	1.00 (25)	.88 (22)
	G3	1.84 (47)	3.38 (86)	.70 (18)	1.00 (25)	.88 (22)
	H1	2.46 (62)	3.55 (90)	.13 (3)	1.38 (35)	1.13 (29) .88 (22)
	J1	3.32 (84)	4.62 (117)	.73 (19)	1.40 (36)	1.31 (33) .88 (22)

3.1.2 NEMA 1 (IP31) Models > 30HP (22kW)

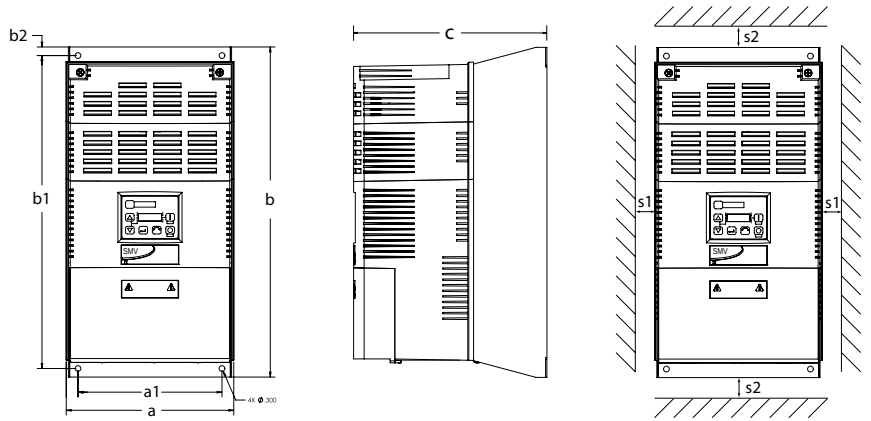

	Type	a in (mm)	a1 in (mm)	b in (mm)	b1 in (mm)	b2 in (mm)	c in (mm)	s1 in (mm)	s2 in (mm)	m lb (kg)
K1	ESV303~~4~~B; ESV303~~6~~B	8.72 (221)	7.50 (190)	14.19 (360)	13.30 (338)	0.45 (11.4)	10.07 (256)	0.6 (15)	2.0 (50)	24 (10.9)
K2	ESV373~~4~~B; ESV373~~6~~B	8.72 (221)	7.50 (190)	17.19 (436)	16.30 (414)	0.45 (11.4)	10.07 (256)	0.6 (15)	2.0 (50)	31 (14.1)
K3	ESV453~~4~~B ESV453~~6~~b	8.72 (221)	7.50 (190)	20.19 (513)	19.30 (490)	0.45 (11.4)	10.07 (256)	0.6 (15)	2.0 (50)	35 (15.9)

Conduit Hole Dimensions	Type	N in (mm)	P in (mm)	P1 in (mm)	Q in (mm)	S in (mm)	S1 in (mm)
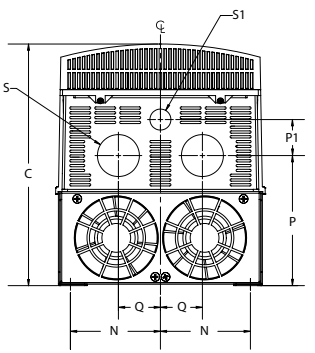	K1	3.75 (95)	5.42 (137)	1.50 (38.1)	1.75 (44.4)	1.75 (44.4)	0.875 (22.2)
	K2	3.75 (95)	5.42 (137)	1.50 (38.1)	1.75 (44.4)	1.75 (44.4)	0.875 (22.2)
	K3	3.75 (95)	5.42 (137)	1.50 (38.1)	1.75 (44.4)	1.75 (44.4)	0.875 (22.2)

3.1.3 NEMA 4X (IP65) Models

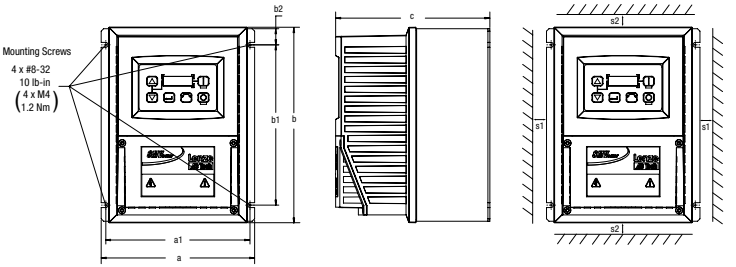

	Type	a in (mm)	a1 in (mm)	b in (mm)	b1 in (mm)	b2 in (mm)	c in (mm)	s1 in (mm)	s2 in (mm)	m lb (kg)
R1	ESV371N01SX_; ESV751N01SX_; ESV371N02YX_; ESV751N02YX_; ESV371N04TX_; ESV751N04TX_; ESV751N06TX_; ESV371N02SF_; ESV751N02SF_; ESV371N04TF_; ESV751N04TF_;	6.28 (160)	5.90 (150)	8.00 (203)	6.56 (167)	0.66 (17)	4.47 (114)	2.00 (51)	2.00 (51)	3.6 (1.63)
R2	ESV112N01SX_; ESV112N02YX_; ESV152N02YX_; ESV112N04TX_; ESV152N04TX_; ESV222N04TX_; ESV152N06TX_; ESV222N06TX_; ESV112N02SF_; ESV152N02SF_; ESV112N04TF_; ESV152N04TF_; ESV222N04TF_; ESV302N04TF_;	6.28 (160)	5.90 (150)	8.00 (203)	6.56 (167)	0.66 (17)	6.31 (160)	2.00 (51)	2.00 (51)	5.9 (2.68)
S1	ESV222N02YX_; ESV222N02SF_	7.12 (181)	6.74 (171)	8.00 (203)	6.56 (167)	0.66 (17)	6.77 (172)	2.00 (51)	2.00 (51)	7.1 (3.24)
T1	ESV552N02TX~; ESV752N02TX~ ESV752N04TX~; ESV752N06TX~; ESV752N04TF~	8.04 (204)	7.56 (192)	10.00 (254)	8.04 (204)	0.92 (23)	8.00 (203)	4.00 (102)	4.00 (102)	10.98 (4.98)
V1	ESV402N02TX_; ESV402N04TX_; ESV552N04TX_; ESV402N06TX_ ESV552N06TX_; ESV402N04TF_; ESV552N04TF_	8.96 (228)	8.48 (215)	10.00 (254)	8.04 (204)	0.92 (23)	8.00 (203)	4.00 (102)	4.00 (102)	11.58 (5.25)
W1	ESV113N02TX~; ESV153N02TX~ ESV113N04TX~; ESV153N04TX~ ESV113N04TF~; ESV153N04TF~ ESV113N06TX~; ESV153N06TX~ ESV183N04TX~; ESV183N04TF~ ESV183N06TX~	9.42 (240)	8.94 (228)	14.50 (368)	12.54 (319)	0.92 (24)	9.45 (241)	4.00 (102)	4.00 (102)	22.0 (10.0)
X1	ESV223N04TX~; ESV223N04TF~ ESV223N06TX~	9.42 (240)	8.94 (228)	18.5 (470)	16.54 (420)	0.92 (24)	9.45 (241)	4.00 (102)	4.00 (102)	25.5 (11.6)

_ = Last digit of part number: C = N4X Indoor (convection cooled) E = N4X In/Outdoor (convection cooled)

~ = Last digit of part number: D = N4X Indoor (fan cooled) F = N4X In/Outdoor (fan cooled)

Conduit Hole Dimensions

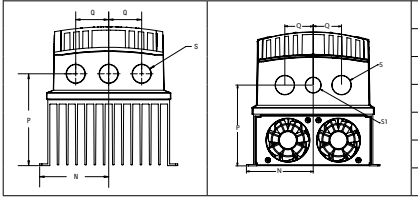

Type	N in (mm)	P in (mm)	Q in (mm)	S in (mm)	S1 in (mm)
R1	3.14 (80)	2.33 (59)	1.50 (38)	.88 (22)	n/a
R2	3.14 (80)	4.18 (106)	1.50 (38)	.88 (22)	n/a
S1	3.56 (90)	4.63 (118)	1.50 (38)	.88 (22)	n/a
T1	4.02 (102)	5.00 (127)	1.85 (47)	1.06 (27)	n/a
V1	4.48 (114)	5.00 (127)	1.85 (47)	1.06 (27)	n/a
W1	4.71 (120)	5.70 (145)	2.00 (51)	1.375 (35)	1.125 (28)
X1	4.71 (120)	5.70 (145)	2.00 (51)	1.375 (35)	1.125 (28)

3.1.4 NEMA 4X (IP65) Models with Disconnect Switch

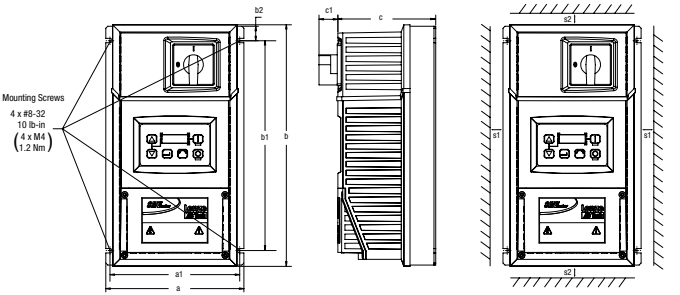

	Type	a in (mm)	a1 in (mm)	b in (mm)	b1 in (mm)	b2 in (mm)	c in (mm)	c1 in (mm)	s1 in (mm)	s2 in (mm)	m lb (kg)
AA1	ESV371N01SM_; ESV371N02YM_; ESV371N02SL_; ESV371N04TM_; ESV371N04TL_; ESV371N06TM_; ESV751N01SM_; ESV751N02YM_; ESV751N02SL_; ESV751N04TM_; ESV751N04TL_; ESV751N06TM_;	6.28 (160)	5.90 (150)	10.99 (279)	9.54 (242)	0.66 (17)	4.47 (114)	.86 (22)	2.00 (51)	2.00 (51)	4.7 (2.13)
AA2	ESV112N01SM_; ESV112N02YM_; ESV112N02SL_; ESV112N04TM_; ESV112N04TL_; ESV152N02YM_; ESV152N02SL_; ESV152N04TM_; ESV152N04TL_; ESV152N06TM_; ESV222N04TM_; ESV222N04TL_; ESV222N06TM_; ESV302N04TL_;	6.28 (160)	5.90 (150)	10.99 (279)	9.54 (242)	0.66 (17)	6.31 (160)	.86 (22)	2.00 (51)	2.00 (51)	7.9 (3.58)
AD1	ESV222N02SL_; ESV222N02YM_;	7.12 (181)	6.74 (171)	10.99 (279)	9.54 (242)	0.66 (17)	6.77 (172)	.86 (22)	2.00 (51)	2.00 (51)	9.0 (4.08)
AB1	ESV552N02TM~; ESV752N02TM~ ESV752N04TM~; ESV752N06TM~; ESV752N04TL~	8.04 (204)	7.56 (192)	13.00 (330)	11.04 (280)	0.92 (23)	8.00 (203)	.86 (22)	4.00 (102)	4.00 (102)	13.9 (6.32)
AC1	ESV402N02TM_; ESV402N04TM_; ESV552N04TM_; ESV402N06TM_; ESV552N06TM_; ESV402N04TL_; ESV552N04TL_	8.96 (228)	8.48 (215)	13.00 (330)	11.04 (280)	0.92 (23)	8.04 204)	.86 (22)	4.00 (102)	4.00 (102)	14.7 (6.66)
AE1	ESV113N04TM~; ESV153N04TM~, ESV113N06TM~; ESV153N06TM~	9.42 (240)	8.94 (228)	14.50 (368)	12.54 (319)	0.92 (24)	9.45 (241)	0.73 (19)	4.00 (102)	4.00 (102)	23.0 (10.4)
AF1	ESV113N02TM~; ESV153N02TM~ ESV113N04TL~; ESV153N04TL~ ESV183N04TL~; ESV223N04TL~ ESV183N04TM~; ESV223N04TM~ ESV183N06TM~; ESV223N06TM~	9.42 (240)	8.94 (228)	18.5 (470)	16.54 (420)	0.92 (24)	9.45 (241)	0.73 (19)	4.00 (102)	4.00 (102)	28.5 (12.9)

_ = Last digit of part number: C = N4X Indoor (convection cooled) ~ = Last digit of part number: D = N4X Indoor (fan cooled)

Conduit Hole Dimensions		Type	N in (mm)	P in (mm)	Q in (mm)	S in (mm)	S1 in (mm)
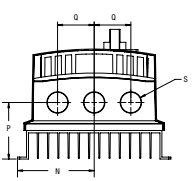	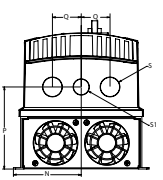	AA1	3.14 (80)	2.33 (59)	1.50 (38)	.88 (22)	n/a
		AA2	3.14 (80)	4.18 (106)	1.50 (38)	.88 (22)	n/a
		AD1	3.56 (90)	4.63 (118)	1.50 (38)	.88 (22)	n/a
		AB1	4.02 (102)	5.00 (127)	1.85 (47)	1.06 (27)	n/a
		AC1	4.48 (114)	5.00 (127)	1.85 (47)	1.06 (27)	n/a
		AE1	4.71 (120)	5.70 (145)	2.00 (51)	1.375 (35)	1.125 (28)
		AF1	4.71 (120)	5.70 (145)	2.00 (51)	1.375 (35)	1.125 (28)

3.2 Electrical Installation

Installation After a Long Period of Storage

STOP!
Severe damage to the drive can result if it is operated after a long period of storage or inactivity without reforming the DC bus capacitors.

If input power has not been applied to the drive for a period of time exceeding three years (due to storage, etc), the electrolytic DC bus capacitors within the drive can change internally, resulting in excessive leakage current. This can result in premature failure of the capacitors if the drive is operated after such a long period of inactivity or storage.

In order to reform the capacitors and prepare the drive for operation after a long period of inactivity, apply input power to the drive for 8 hours prior to actually operating the motor.

3.2.1 Power Connections

STOP!
If the kVA rating of the AC supply transformer is greater than 10 times the input kVA rating of the drive(s), an isolation transformer or 2-3% input line reactor must be added to the line side of the drive(s).

DANGER! Hazard of electrical shock!
Circuit potentials up to 600 VAC are possible. Capacitors retain charge after power is removed. Disconnect power and wait at least three minutes before servicing the drive.

STOP!
- Verify mains voltage before connecting to drive.
- Do not connect mains power to the output terminals (U,V,W)! Severe damage to the drive will result.
- Do not cycle mains power more than once every two minutes. Damage to the drive may result.

Mains and Motor Terminations		
Type	**Torque**	**Strip Length**
<5HP	12 lb-in (1.3 Nm)	5/16 in (8mm)
ESV552xx2T, ESV752xx2T, ESV113xx4/6, ESV153xx4/6, ESV183xx6, ESV223xx6	16 lb-in (1.8 Nm)	5/16 in (8mm)
ESV552xx4Txx, ESV752xx4Txx, ESV552xx6Txx, ESV752xx6Txx	12 lb-in (1.3Nm)	0.25 in (6mm)
ESV113xx2xxx, ESV153xx2xxx, ESV183xx4xxx, ESV223xx4xxx, ESV303xx4xxx	24 lb-in (2.7 Nm)	7/16 in (10mm)
ESV373xx4xxx, ESV453xx4xxx	27 lb-in (3.05 Nm)	0.75 in (19mm)
Torque: N4X/IP65 Door Screws		
N4X/IP65	6-7 lb-in (0.67-0.79 Nm)	0.25 in (6mm)

3.2.1.1 Mains Connection to 120VAC Single-Phase Supply

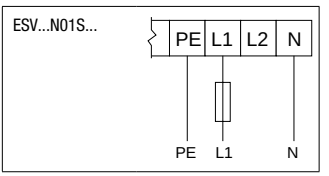

3.2.1.2 Mains Connection to 240VAC Single-Phase Supply

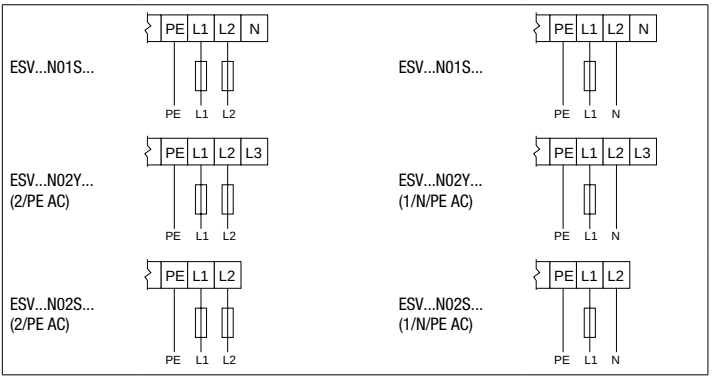

3.2.1.3 Mains Connection to Three-Phase Supply

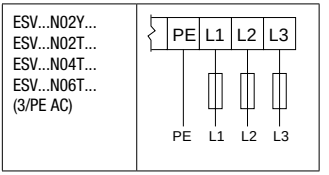

3.2.1.4 Motor Connection

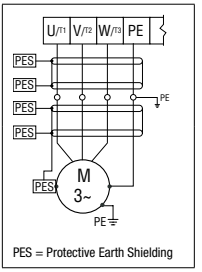

WARNING!
If the cable connection between the drive and the motor has an in-line contactor or circuit breaker then the drive must be stopped prior to opening/closing the contacts. Failure to do so may result in Overcurrent trips and/or damage to the inverter.

WARNING!
Leakage current may exceed 3.5 mA AC. The minimum size of the protective earth (PE) conductor shall comply with local safety regulations for high leakage current equipment.

STOP!
In the case of a Spinning Motor:

To bring free-wheeling loads such as fans to a rest before starting the drive, use the DC injection braking function. Starting a drive into a freewheeling motor creates a direct short-circuit and may result in damage to the drive.

Confirm motor suitability for use with DC injection braking.
Consult parameter P110 for starting / restarting into spinning motors.

3.2.1.5 Installation Recommendations for EMC Compliance

For compliance with EN 61800-3 or other EMC standards, motor cables, line cables and control or communications cables must be shielded with each shield/screen clamped to the drive chassis. This clamp is typically located at the conduit mounting plate.

The EMC requirements apply to the final installation in its entirety, not to the individual components used. Because every installation is different, the recommended installation should follow these guidelines as a minimum. Additional equipment (such as ferrite core absorbers on power conductors) or alternative practices may be required to meet conformance in some installations.

Motor cable should be low capacitance (core/core <75pF/m, core/shield <150pF/m). Filtered drives can meet the class A limits of EN 55011 and EN 61800-3 Category 2 with this type of motor cable up to 10 meters.

NOTE: Refer to Appendix A for recommended cable lengths. Any external line filter should have its chassis connected to the drive chassis by mounting hardware or with the shortest possible wire or braid.

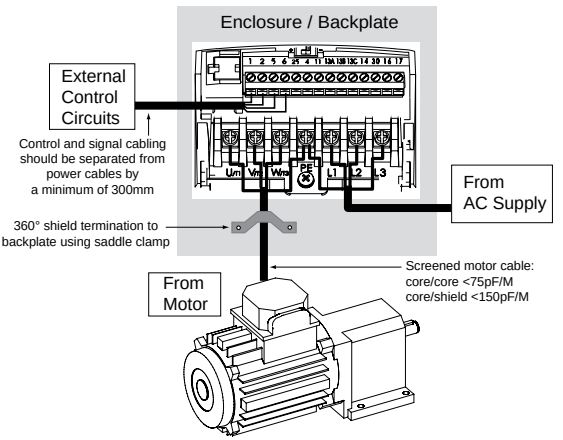

3.2.1.6 NEMA 4X (IP65) Input Terminal Block

For NEMA 4X (IP65) models with integrated EMC filter and/or integrated line disconnect, the input terminal block is located on the right-hand side of the SMV inverter in the NEMA 4 X (IP65) enclosure. The single and three phase models are illustrated herein. Refer to paragraph 3.2.3 Control Terminals for pin out information.

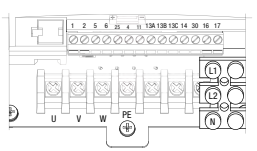

Single Phase (2/PE) 120/240 VAC models (ESVxxxN01SMC) with integrated line disconnect

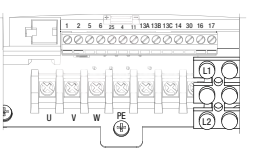

Single Phase (2/PE) 240 VAC models with Filter and/or integrated line disconnect

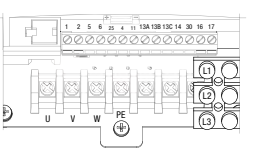

Three Phase (3/PE) models with Filter and/or integrated line disconnect

WARNING
Power remains present for up to 3 minutes on power input terminals (L1, L2 and L3) and output terminals (U, V and W) even when the disconnect switch is in the OFF position. Remove input power ahead of the drive and wait 3 minutes before removing the terminal cover.

3.2.1.7 Dynamic Brake Connections

For NEMA 1 and NEMA 4X Drives rated up to 30HP (22kW) the Dynamic Brake connections are made as illustrated herein. Refer to the SMV Dynamic Brake Instructions (DBV01) for complete information.

NEMA 1 (IP31) up to 30HP (22kW)	NEMA 4X (IP65) up to 30HP (22kW)
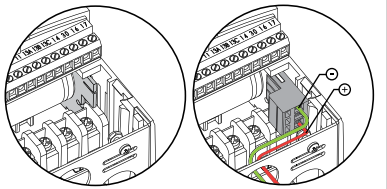	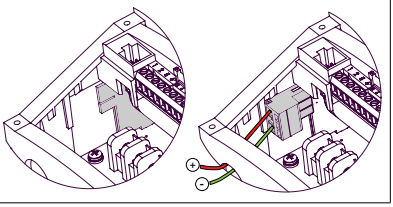

The SMV 40...60Hp (30...45kW) models include a dynamic brake transistor as standard and only require the connection of an external resistor kit for dynamic braking operation. The dynamic brake resistor connections for 40...60 Hp (30...45kW) drives are standard built-in connections as illustrated in the diagram below. In the 40Hp (30kW) model drives, the dynamic brake connector is on the right-hand side of the drive and the terminals from top to bottom are B-, BRAKE and B+. In the 50/60HP (37.5/45 kW) model drives, the dynamic brake connector is on the left-hand side of the drive and the terminals from top to bottom are B+, BRAKE and B-.

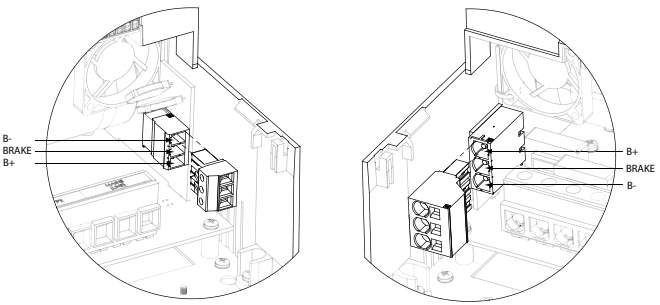

40HP (30kW) 50/60HP (37.5/45kW)

External resistor kits must be connected to terminals B+ and BRAKE (no connection to B-). Refer to the table herein for external resistor kit selection. Refer to parameter P189 for enabling the dynamic brake function in the 40...60Hp (30...45kW) models.

400/480 VAC SMV Inverter			Resistor Kit			
Type	**Hp**	**kW**	**Resistance (Ω)**	**Power (W)**	**Catalog #**	**SAP#**
ESV303**4T**	40	30	23.5	1020	841-013	13317724
ESV373**4T**	50	37	17	1400	841-015	13317626
ESV453**4T**	60	45	17	1400	841-015	13317626
600 VAC SMV Inverter			**Resistor Kit**			
Type	**Hp**	**kW**	**Resistance (Ω)**	**Power (W)**	**Catalog #**	**SAP#**
ESV303**6T**	40	30	35	1070	841-014	13317624
ESV373**6T**	50	37	24	1560	841-016	13317628
ESV453**6T**	60	45	24	1560	841-016	13317628

3.2.2 Fuses/Cable Cross-Sections

NOTE: Observe local regulations. Local codes may supersede these recommendations

Type		Recommendations				
		Fuse	Miniature circuit breaker[1]	Fuse[2] or Breaker[3] (N. America)	Input Power Wiring (L1, L2, L3, PE)	
					[mm²]	[AWG]
120V 1~ (1/N/PE)	ESV251N01SXB	M10 A	C10 A	10 A	1.5	14
	ESV371N01SXB, ESV371N01SX*	M16 A	C16 A	15 A	2.5	14
	ESV751N01SXB, ESV751N01SX*	M25 A	C25 A	25 A	4	10
	ESV112N01SXB, ESV112N01SX*	M32 A	C32 A	30A	4	10
240V 1~ (2/PE)	ESV251N01SXB, ESV251N02SXB, ESV371N01SXB, ESV371N02YXB, ESV371N02SF*	M10 A	C10 A	10 A	1.5	14
	ESV751N01SXB, ESV751N02YXB, ESV751N02SF*	M16 A	C16 A	15 A	2.5	14
	ESV112N02YXB, ESV112N02SFC, ESV112N01SXB ESV112N01SX*	M20 A	C20 A	20 A	2.5	12
	ESV152N02YXB, ESV152N02SF*	M25 A	C25 A	25 A	2.5	12
	ESV222N02YXB, ESV222N02SF*	M32 A	C32A	30 A	4	10
240V 3~ (3/PE)	ESV371N02YXB, ESV751N02YXB, ESV371N02Y_*, ESV751N02Y_*	M10 A	C10 A	10 A	1.5	14
	ESV112N02YXB, ESV152N02YXB, ESV112N02TXB, ESV152N02TXB, ESV112N02Y_*, ESV152N02Y_*	M16 A	C16 A	12 A	1.5	14
	ESV222N02YXB, ESV222N02TXB, ESV222N02YX*	M20 A	C20 A	20 A	2.5	12
	ESV402N02TXB, ESV402N02T_*	M32 A	C32 A	30 A	4.0	10
	ESV552N02TXB, ESV552N02T_~	M40 A	C40 A	35 A	6.0	8
	ESV752N02TXB, ESV752N02T_~	M50 A	C50 A	45 A	10	8
	ESV113N02TXB, ESV113N02TX~, ESV113N02TM~	M80 A	C80 A	80 A	16	6
	ESV153N02TXB, ESV153N02TX~, ESV153N02TM~	M100 A	C100 A	90 A	16	4
400V or 480V 3~(3/PE)	ESV371N04TXB ...ESV222N04TXB ESV371N04T_* ...ESV222N04T_* ESV371N04TF* ...ESV222N04TF*	M10 A	C10 A	10 A	1.5	14
	ESV302N04T_*	M16 A	C16 A	15 A	2.5	14
	ESV402N04TXB, ESV402N04T_*	M16 A	C16 A	20 A	2.5	14
	ESV552N04TXB, ESV552N04T_*	M20 A	C20 A	20 A	2.5	14
	ESV752N04TXB, ESV752N04T_~	M25 A	C25 A	25 A	4.0	10
400V or 480V 3~(3/PE)	ESV113N04TXB, ESV113N04T_~	M40 A	C40 A	40 A	4	8
	ESV153N04TXB, ESV153N04T_~	M50 A	C50 A	50 A	10	8
	ESV183N04TXB, ESV183N04T_~	M63 A	C63A	70 A	10	6
	ESV223N04TXB, ESV223N04T_~	M80 A	C80 A	80 A	16	6
	ESV303N04TXB	M100 A	C100 A	100 A	25	4
	ESV373N04TXB	M125 A	C125 A	125 A	35	2
	ESV453N04TXB	M160 A	C160 A	150 A	35	1
600V 3~(3/PE)	ESV751N06TXB ...ESV222N06TXB ESV751N06T_* ...ESV222N06T_*	M10 A	C10 A	10 A	1.5	14
	ESV402N06TXB, ESV402N06T_*	M16 A	C16 A	12 A	1.5	14
	ESV552N06TXB, ESV552N06T_*	M16 A	C16 A	15 A	2.5	14
	ESV752N06TXB, ESV752N06T_~	M20 A	C20 A	20 A	2.5	12
	ESV113N06TXB, ESV113N06TX~, ESV113N06TM~	M32 A	C32 A	30 A	4	10
	ESV153N06TXB, ESV153N06TX~, ESV153N06TM~	M40 A	C40 A	40 A	4	8
	ESV183N06TXB, ESV183N06TX~, ESV183N06TM~	M50 A	C50 A	50 A	6	8
	ESV223N06TXB, ESV223N06TX~, ESV223N06TM~	M63 A	C63 A	60 A	10	8
	ESV303N06TXB	M80 A	C80 A	70 A	16	6
	ESV373N06TXB	M100 A	C100 A	90 A	16	4
	ESV453N06TXB	M125 A	C125 A	110 A	25	2

Notes for Fuse and Cable Table:

(1) Installations with high fault current due to large supply mains may require a type D circuit breaker.
(2) UL Class CC or T fast-acting current-limiting type fuses, 200,000 AIC, preferred. Bussman KTK-R, JJN or JJS or equivalent.
(3) Thermomagnetic type breakers preferred.

_ 11th digit of part number:	F = Integral EMC Filter
	L = Integral EMC Filter and Integrated Disconnect Switch (NEMA 4X/IP65 Models only)
	M = Integrated Disconnect Switch (NEMA 4X/IP65 Models only)
	X = No EMC Filter/ No Disconnect Switch
* = Last digit of part number:	C = N4X Indoor only (convection cooled)
	E = N4X Indoor/Outdoor (convection cooled)
~ = Last digit of part number:	D = N4X Indoor only (fan cooled)
	F = N4X Indoor/Outdoor (fan cooled)

Observe the following when using Ground Fault Circuit Interrupters (GFCIs):

- Installation of GFCI only between supplying mains and controller.
- The GFCI can be activated by:
  - capacitive leakage currents between the cable screens during operation (especially with long, screened motor cables)
  - connecting several controllers to the mains at the same time
  - RFI filters

3.2.3 Control Terminals

Control Terminal Strip for 0.33 - 10 HP (0.25 - 7.5 kW):

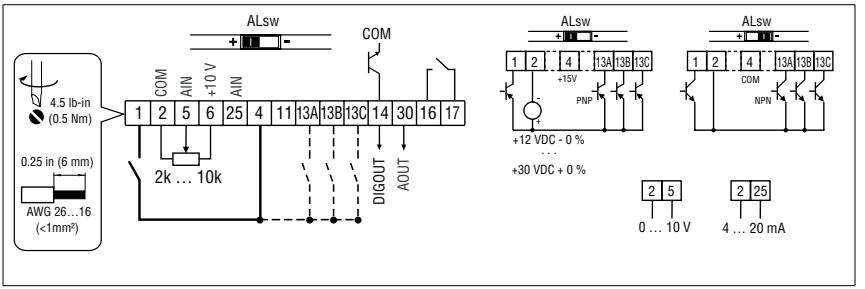

Control Terminal Strip for 15HP (11 kW) and Greater Drives:

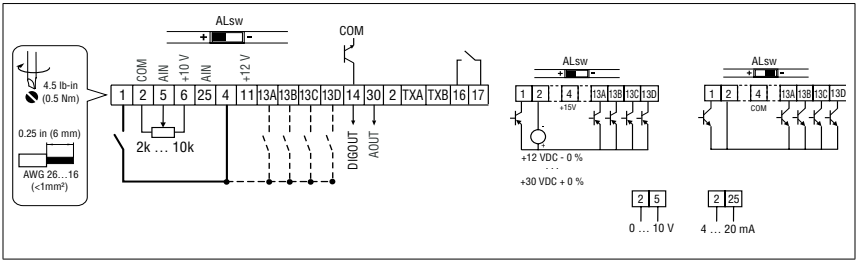

NOTE
Control and communications terminals provide basic insulation when the drive is connected to a power system rated up to 300V between phase to ground (PE) and the applied voltage on terminals 16 and 17 is less than 250 VAC between phase to phase and ground (PE).

Control Terminal Strip Descriptions

Terminal	Description	Important
1	Digital Input: Start/Stop	input resistance = 4.3kΩ
2	Analog Common	
5	Analog Input: 0...10 VDC	input resistance: >50 kΩ
6	Internal DC supply for speed pot	+10 VDC, max. 10 mA
25	Analog Input: 4...20 mA	input resistance: 250Ω
4	Digital Reference/Common	+15 VDC / 0 VDC, depending on assertion level
11	Internal DC supply for external devices	+12 VDC, max. 50 mA
13A	Digital Input: Configurable with P121	input resistance = 4.3kΩ
13B	Digital Input: Configurable with P122	
13C	Digital Input: Configurable with P123	
13D*	Digital Input: Configurable with P124	
14	Digital Output: Configurable with P142, P144	DC 24 V / 50 mA; NPN
30	Analog Output: Configurable with P150…P155	0…10 VDC, max. 20 mA
2*	Analog Common	
TXA*	RS485 TxA	
TXB*	RS485 TxB	
16	Relay output: Configurable with P140, P144	AC 250 V / 3 A DC 24 V / 2 A … 240 V / 0.22 A, non-inductive
17		

***** = Terminal is part of the terminal strip for the 15HP (11kW) and higher models only.

Assertion level of digital inputs

The digital inputs can be configured for active-high or active-low by setting the Assertion Level Switch (ALsw) and P120. If wiring to the drive inputs with dry contacts or with PNP solid state switches, set the switch and P120 to “High” (+). If using NPN devices for inputs, set both to “Low” (-). Active-high (+) is the default setting.

HIGH = +12 … +30 V
LOW = 0 … +3 V

NOTE
An **F_AL** fault will occur if the Assertion Level switch (ALsw) position does not match the parameter P120 setting and P100 or any of the digital inputs (P121...P124) is set to a value other than 0.

4 Commissioning

4.1 Local Keypad & Display

SMV Models: 0.33-10HP (0.25-7.5kW)	SMV Models: 15HP (11kW) and greater
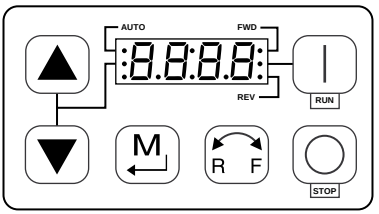	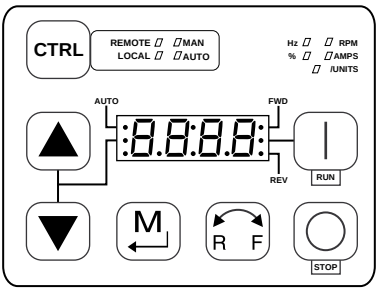
4-Character Display	4-Character plus CTRL Display

Display	START BUTTON
	In Local Mode (P100 = 0, 4, 6), this button will start the drive.
	STOP BUTTON
	Stops the drive, regardless of which mode the drive is in. ⚠ **WARNING!** When JOG is active, the STOP button will not stop the drive!
	ROTATION
	In Local Mode (P100 = 0, 4, 6), this selects the motor rotation direction: - The LED for the present rotation direction (FWD or REV) will be on - Press R/F; the LED for the opposite rotation direction will blink - Press M within 4 seconds to confirm the change - The blinking direction LED will turn on, and the other LED will turn off When rotation direction is changed while the drive is running, the commanded direction LED will blink until the drive is controlling the motor in the selected direction. Rotation is set in P112. When P112 = 0, rotation is forward only. When P112 = 1 rotation is forward and reverse.
	MODE
	Used to enter/exit the Parameter Menu when programming the drive and to enter a changed parameter value.
	UP AND DOWN BUTTONS
	Used for programming and can also be used as a reference for speed, PID setpoint, or torque setpoint. When the ▲ and ▼ buttons are the active reference, the middle LED on the left side of the display will be on.

Display	INDICATING LEDs (on 4-character display)
	FWD LED: Indicate the present rotation direction is forward. Refer to ROTATION description above.
	REV LED: Indicate the present rotation direction is reverse. Refer to ROTATION description above.
	AUTO LED: Indicates that the drive has been put into Auto mode from one of the TB13 inputs (P121…P124 set to 1…7). Indicates that PID mode is active (if PID mode is enabled). Indicates that sequencer mode is active (if sequencer mode is enabled).
	RUN LED: Indicates that the drive is running.
	▲ ▼ LED: Indicates that the ▲ ▼ are the active reference.
	NOTE If the keypad is selected as the auto reference (P121…P124 is 6) and the corresponding TB-13 input is closed, the AUTO LED and ▲ ▼ LEDs will both be on.
	FUNCTIONS THAT FOLLOW ARE APPLICABLE TO SMV DRIVES 15HP (11kW) AND HIGHER
CTRL	**CTRL** The CTRL pushbutton selects the start and speed reference control sources for the drive. Press [M] mode button to accept the new control mode selection.

CTRL LEDs		START CONTROL	REFERENCE CONTROL
REMOTE ☐ ■ MAN LOCAL ■ ☐ AUTO	[LOCAL] [MAN]	Keypad	P101 Settings
REMOTE ☐ ☐ MAN LOCAL ■ ■ AUTO	[LOCAL] [AUTO]	Keypad	Terminal 13x Settings
REMOTE ■ ■ MAN LOCAL ☐ ☐ AUTO	[REMOTE] [MAN]	Terminal Strip	P101 Settings
REMOTE ■ ☐ MAN LOCAL ☐ ■ AUTO	[REMOTE] [AUTO]	Terminal Strip	Terminal 13x Settings

If P100 = 6 the CTRL button is used to toggle start control between the terminal strip [REMOTE] and the keypad [LOCAL]	- REM/LOC LED indicating the present start control source is ON - Press [CTRL]; the LED for other start control source will blink - Press [M] within 4 sec to confirm the change - Blinking LED will turn ON (the other LED will turn OFF)
If P113 = 1 the CTRL button is used to toggle reference control between the TB-13x setup [AUTO] and P101 [MANUAL]	- AUT/MAN LED indicating present reference control is ON - Press [CTRL]; the other reference control will blink - Press [M] within 4 sec to confirm change - Blinking LED will turn ON (the other LED will turn OFF)
If P100 = 6 and P113 = 1, it is possible to change the start and reference control sources at the same time	

Display	START CONTROL	
	The REMOTE/LOCAL LEDs indicate the current start control source. If the start control source is a remote keypad or the network, then both LEDs will be OFF.	
	REFERENCE CONTROL	
	The AUTO/MANUAL LEDs indicate the current reference control source.	
	IF P113 = 0 or 2, the AUTO/MANUAL LEDs will match the AUTO LED on the 4-character display. IF P113 = 0 and no AUTO reference has been setup on the terminal strip, the MANUAL LED will turn ON and the AUTO LED will turn OFF.	
	IF P113 = 1, the AUTO/MANUAL LEDS show the commanded reference control source as selected by the [CTRL] button. If the [CTRL] button is used to set the reference control source to AUTO but no AUTO reference has been setup on the terminal strip, reference control will follow P101 but the AUTO LED will remain ON.	
	UNITS LEDs	
	HZ: current display value is in Hz	In Speed mode, if P178 = 0 then HZ LED will be ON. If P178 > 0, the Units LEDs follow the setting of P177 when the drive is in run (non-programming) mode. In Torque mode, the HZ LED will be ON when the drive is in run (non-programming) mode. In Pid mode, the Units LEDs follow the setting of P203 when the drive is in run (non-programming) mode. If P179 > 0, the Units LEDs will show the unit of the diagnostic parameter that is being displayed.
	%: current display value is in %	
	RPM: current display value is in RPM	
	AMPS: current display value is in Amps	
	/UNITS current display value is a per unit (i.e./sec, /min, /hr, etc.)	

4.2 Drive Display and Modes of Operation

Speed Mode Display
In the standard mode of operation, the drive frequency output is set directly by the selected reference (keypad, analog reference, etc.). In this mode, the drive display will show the drive's output frequency.

PID Mode Display
When the PID mode is enabled and active, the normal run display shows the actual PID setpoint. When PID mode is not active, the display returns to showing the drive's output frequency.

Torque Mode Display
When the drive is operating in Vector Torque mode, the normal run display shows the drive's output frequency.

Alternate (Run-Screen) Display
When P179 (Run Screen Display) is set to a value other than 0, one of the diagnostic parameters (P501…P599) is displayed. Example: if P179 is set to 1, then diagnostic parameter P501 (Software version) is displayed. If P179 =2, then P502 (Drive ID) is displayed.

4.3 Parameter Setting

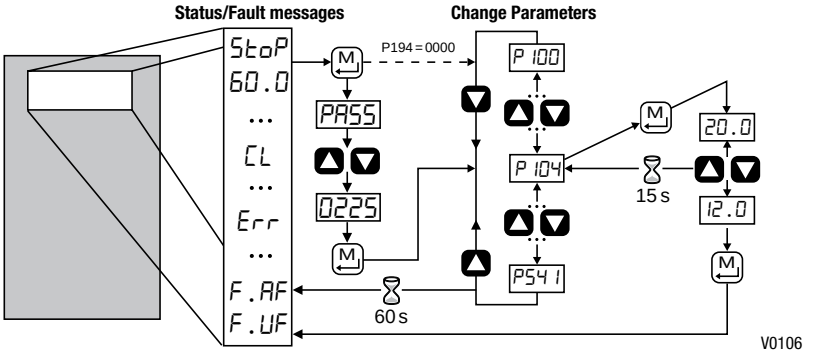

4.4 Electronic Programming Module (EPM)

The EPM contains the drives operational memory. Parameter settings are stored in the EPM and setting changes are made to the "User settings" in the EPM.

An optional EPM Programmer (model EEPM1RA) is available that allows:

- An EPM to be copied directly to another EPM.
- An EPM to be copied to the memory of the EPM Programmer.
- Stored files can be modified in the EPM Programmer.
- Stored files can be copied to another EPM.

EPM Module in SMV Drive

As the EPM Programmer is battery operated, parameter settings can be copied to an EPM and inserted into a drive without power being applied to the drive. This means that the drive will be fully operational with the new settings on the next application of power.

Additionally, when the drives parameter settings are burned into an EPM with the EPM Programmer, the settings are saved in two distinct locations; the "User settings" and the "OEM default settings". While the User settings can be modified in the drive, the OEM settings cannot. Thus, the drive can be reset not only to the "factory" drive default settings (shown in this manual), but can be set to the Original Machine settings as programmed by the OEM.

The user area contents of the EPM are what are copied into the OEM space by the EPM programmer. When parameter modifications are made to the drive and then a copy made via the EPM Programmer, these are the settings that will be available by the OEM selections from P199. The EPM Programmer is the only way to load the OEM area of the EPM.

While the EPM can be removed for copying or to use in another drive, it must be installed for the drive to operate (a missing EPM will trigger an **F_F I** fault)

4.5 Parameter Menu

4.5.1 Basic Setup Parameters

Code		Possible Settings		IMPORTANT
No.	Name	Default	Selection	
P 100	Start Control Source	0	0 Local Keypad	Use RUN button on front of drive to start
			1 Terminal Strip	Use start/stop circuit wired into the terminal strip. Refer to section 3.2.3
			2 Remote Keypad Only	Use RUN button on optional Remote Keypad to start
			3 Network Only	• Start command must come from network (Modbus, CANopen, etc) • SMV models <15HP (11kW) require optional communication module (refer to the network module documentation). • Must also set one of the TB-13 inputs to 9 (Network Enable); see P121...P124
			4 Terminal Strip or Local Keypad	Allows start control to be switched between terminal strip and local keypad using one of the TB-13 inputs. See note below.
			5 Terminal Strip or Remote Keypad	Allows start control to be switched between terminal strip and optional remote keypad using one of the TB-13 inputs. See Note below
			6 CTRL button select	Allows start control to be switched between terminal strip and local keypad using the CTRL button. **NOTE:** P100 Selection 6 is applicable to SMV 15HP (11kW) and higher models only.
		⚠	**WARNING!** P100 = 0 disables TB-1 as a STOP input! STOP circuitry may be disabled if parameters are reset back to defaults (see P199)	
		ℹ	**NOTE** • P100 = 4, 5: To switch between control sources, one of the TB-13 inputs (P121...P124) must be set to 08 (Control Select); TB-13x OPEN (or not configured): Terminal strip control TB-13x CLOSED: Local (P100 = 4) or Remote (P100 = 5) keypad • P100 = 0, 1, 4, 6: Network can take control if P121...P124 = 9 and the corresponding TB-13x input is CLOSED. • The STOP button on the front of the drive is always active except in JOG mode. • TB-1 is an active STOP input if P100 is set to a value other than 0. • An F_AL fault will occur if the Assertion Level switch (ALsw) position does not match the P120 setting and P100 is set to a value other than 0.	
P 101	Standard Reference Source	0	0 Keypad (Local or Remote)	Selects the default speed or torque reference when no Auto Reference is selected using the TB-13 inputs.
			1 0-10 VDC	
			2 4-20 mA	
			3 Preset #1 (P131)	
			4 Preset #2 (P132)	
			5 Preset #3 (P133)	
			6 Network	
			7 Preset Sequence Segment #1 (P710)	Selections 7, 8 & 9 are not valid for PID setpoint or torque reference.
			8 Preset Sequence Segment #2 (P715)	
			9 Preset Sequence Segment #3 (P720)	

Code		Possible Settings				IMPORTANT
No.	Name	Default	Selection			
P 102	Minimum Frequency	0.0	0.0	{Hz}	P103	• P102, P103 are active for all speed references • When using an analog speed reference, also see P160, P161
P 103	Maximum Frequency	60.0	7.5	{Hz}	500	
			NOTE • P103 cannot be set below Minimum Frequency (P102) • To set P103 above 120 Hz: - Scroll up to 120 Hz; display shows H iFr (flashing). - Release ▽ button and wait one second. - Press ▽ button again to continue increasing P103.			
	WARNING! Consult motor/machine manufacturer before operating above rated frequency. Overspeeding the motor/machine may cause damage to equipment and injury to personnel!					
P 104	Acceleration Time 1	20.0	0.0	{s}	3600	• P104 = time of frequency change from 0 Hz to P167 (base frequency) • P105 = time of frequency change from P167 to 0 Hz • For S-ramp accel/decel, adjust P106
P 105	Deceleration Time 1	20.0	0.0	{s}	3600	
	EXAMPLE: IF P103 = 120 Hz, P104 = 20.0 s and P167 (base frequency) = 60 Hz; then the rate of frequency change from 0 Hz to 120 Hz = 40.0 s					
P 106	S-Ramp Integration Time	0.0	0.0	{s}	50.0	• P106 = 0.0: Linear accel/decel ramp • P106 > 0.0: Adjusts S-ramp curve for smoother ramp
P 107(1)	Line Voltage Selection	1*	0 Low (120, 200, 400, 480VAC) 1 High (120, 240, 480, 600VAC)			* The default setting is 1 for all drives except when using "Reset to 50Hz default settings" (Parameter P199, selection 4) with 480V models. In this case, the default setting is 0.
P 108	Motor Overload	100	30	{%}	100	P108 = motor current rating x 100 SMV output rating Example: if motor = 3amps and SMV = 4amps, then P108 = 75%
			NOTE Do not set above rated motor current as listed on the motor dataplate. The motor thermal overload function of the SMV is UL approved as a motor protection device. Cycling power after an overload fault could result in significantly reducing the motor life.			
P 109	Motor Overload Type	0	0 Speed Compensation 1 No Speed Compensation Example: Motor is cooled by forced ventilation as apposed to shaft mounted, self cooling fans.			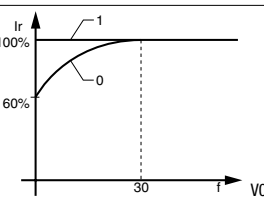

(1) Any changes to this parameter will not take effect until the drive is stopped.

Code		Possible Settings		IMPORTANT
No.	Name	Default	Selection	
P110	Start Method	0	0 Normal	
			1 Start on Power-up	Drive will automatically start when power is applied.
			2 Start with DC Brake	When start command is applied, drive will apply DC braking according to P174, P175 prior to starting the motor
			3 Auto Restart	Drive will automatically restart after faults, or when power is applied.
			4 Auto Restart with DC Brake	Combines settings 2 and 3
			5 Flying Start/Restart - Type 1	• Drive will automatically restart after faults, or when power is applied. • After 3 failed attempts, drive will Auto Restart with DC brake. • P110 = 5, 7: Performs speed search, starting at Max Frequency (P103) • P110 = 6, 8: Performs speed search, starting at the last output frequency prior to faulting or power loss • If P111 = 0, a flying START is performed when a start command is applied. • P110 = 7,8: Utilizes P280/281 to set Max Current Level and Decel Time for restart
			6 Flying Start/Restart - Type 1	
			7 Flying Start /Restart - Type 2 for 2-pole motors requiring a flying restart	
			8 Flying Start/Restart - Type 2 for 2-pole motors requiring a flying restart	
			NOTE • P110 = 0, 2: Start command must be applied at least 2 seconds after power-up; F_UF fault will occur if start command is applied too soon. • P110 = 1, 3…6: For automatic start/restart, the start source must be the terminal strip and the start command must be present. • P110 = 2, 4…6: If P175=999.9, dc braking will be applied for 15s. • P110 = 3…6: Drive will attempt 5 restarts; if all restart attempts fail, drive displays LC (fault lockout) and requires manual reset. • P110 = 5, 6: If drive cannot catch the spinning motor, drive will trip into F_rF fault. • P110 = 5, 6: If drive trips into F_OF fault, try P110 = 7 or 8.	
	WARNING! Automatic starting/restarting may cause damage to equipment and/or injury to personnel! Automatic starting/restarting should only be used on equipment that is inaccessible to personnel.			
P111	Stop Method	0	0 Coast	Drive's output will shut off immediately upon a stop command, allowing the motor to coast to a stop
			1 Coast with DC Brake	The drive's output will shut off and then the DC Brake will activate (refer to P174, P175)
			2 Ramp	The drive will ramp the motor to a stop according to P105 or P126.
			3 Ramp with DC Brake	The drive will ramp the motor to 0 Hz and then the DC Brake will activate (refer to P174, P175)
P112	Rotation	0	0 Forward Only	If PID mode is enabled, reverse direction is disabled (except for Jog).
			1 Forward and Reverse	

Code		Possible Settings		IMPORTANT
No.	Name	Default	Selection	
P113	Auto/Manual Control	0	0 Terminal Strip Control	The reference is dictated by the settings and state of the TB-13x terminals. If no AUTO reference has been setup on the terminal strip then reference control is dictated by P101.
			1 Auto/Manual (CTRL button select)	Allows the reference to be switched between auto and manual using the CTRL pushbutton on the drive keypad. If the CTRL pushbutton has selected AUTO reference but no AUTO reference has been setup on the terminal strip, then reference control is dictated by P101.
			2 Manual Control Only	Reference is dictated by P101 regardless of any AUTO source that may be selected by the TB-13x terminals.
		ℹ	**NOTE** P113 is applicable to SMV 15HP (11kW) and higher models only.	
P115	MOP Speed Initialization at Power-Up	0	0 Set to last MOP speed at power up	Output frequency at power-up = last MOP speed
			1 Set to 0.0Hz at power up	Output frequency at power-up = 0Hz
			2 Set to Preset #3 (P133) at power up	Output frequency at power-up = P133

4.5.2 I/O Setup Parameters

Code		Possible Settings		IMPORTANT
No.	Name	Default	Selection	
P 120	Assertion Level	2	1 Low 2 High	P120 and the Assertion Level switch must both match the desired assertion level unless P100, P121…P124 are all set to 0. Otherwise an F.AL fault will occur.
P 121 P 122 P 123 P 124	TB-13A Digital Input TB-13B Digital Input (Priority > TB13A) Same as TB13A except: 3 = Preset #2 23 = Seq Seg, #2 TB-13C Digital Input (Priority > TB13B, A) Same as TB13A except: 3 = Preset #3 23 = Seq Seg, #4 TB-13D* Digital Input (Priority > TB13C, B, A) Same as TB13A except: 3 = Preset #4 23 = Seq Seg, #8 **NOTE: P124** is applicable to SMV 15HP (11kW) and higher models only	0	0 None	Disables input
			1 AUTO Reference: 0-10 VDC	For frequency mode, see P160...P161, For PID mode, see P204…P205, For vector torque mode, see P330
			2 AUTO Reference: 4-20 mA	
			3 AUTO Reference: Preset #1 * 13D: 3 = Reserved	For frequency mode see P131...P137, For PID mode, see P231…P233, For torque mode see, P331…P333
			4 AUTO Reference: MOP Up	• Normally open: Close input to increase or decrease speed, PID or torque setpoint. • MOP Up is not active while in STOP
			5 AUTO Reference: MOP Down	
			6 AUTO Reference: Keypad	
			7 AUTO Reference: Network	
			8 Control Select	Use when P100 = 4, 5 to switch between terminal strip control and local or remote keypad control.
			9 Network Enable	Required to start the drive through the network.
			10 Reverse Rotation	Open = Forward Closed = Reverse
			11 Start Forward	Refer to Note for typical circuit
			12 Start Reverse	
			13 Run Forward	Refer to Note for typical circuit
			14 Run Reverse	
			15 Jog Forward	Jog Forward speed = P134
			16 Jog Reverse	Jog Reverse speed = P135 ⚠ Active even if P112 = 0
			17 Accel/Decel #2	Refer to P125, P126
			18 DC Brake	Refer to P174; close input to override P175
			19 Auxiliary Ramp to Stop	Normally closed: Opening input will ramp drive to STOP according to P127, even if P111 is set to Coast (0 or 1).
			20 Clear Fault	Close to reset fault
			21 External Fault F_EF	Normally closed circuit; open to trip
			22 Inverse External Fault F_EF	Normally open circuit; close to trip
			23 AUTO Ref: Sequence Segment #1	Works in Speed Mode only
			24 Start Sequence	
			25 Step Sequence	Transition from non-asserted to asserted state
			26 Suspend Sequence	

⚠ **WARNING**
Jog overrides all STOP commands! To stop the drive while in Jog mode, the Jog input must be deactivated or a fault condition induced.

⚠ **WARNING**
If the input defined to "Start Sequence" is opened during a sequence, the drive will exit sequencer mode and will run at the specified standard or alternate speed source (dependent on drive configuration).

Code		Possible Settings				IMPORTANT
No.	Name	Default	Selection			
	NOTE • When input is activated, settings 1...7 override P101 • When TB-13A...TB-13D are configured for Auto References other than MOP, TB-13D overrides TB-13C, TB-13C overrides TB-13B and TB-13B overrides TB-13A. Any other Auto Reference will have priority over MOP. • Settings 10...14 are only valid in Terminal Strip mode (P100 = 1, 4, 5, 6) • If Start/Run/Jog Forward and Start/Run/Jog Reverse are both activated, drive will STOP • If Jog input is activated while drive is running, the drive will enter Jog mode; when Jog input is deactivated, drive will STOP • An **F_AL** fault will occur if the Assertion Level switch (ALsw) position does not match the P120 setting and any of the digital inputs (P121...P124) are set to a value other than 0. • An **F_IL** fault will occur under the following conditions: - TB-13A...TB-13D settings are duplicated (each setting, except 0, 3 and 23, can only be used once) - One input is set to "MOP Up" and another is not set to "MOP Down", or vice-versa. - One input is set to 10 and another input is set to 11…14. - One input is set to 11 or 12 and another input is set for 13 or 14. • Typical control circuits are shown below: - If any input is set to 10, 12 or 14, P112 must be set to 1 for Reverse action to function. Run / Stop with Direction P121 = 10 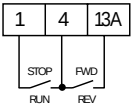 Start Forward / Start Reverse P121 = 11, P122 = 12 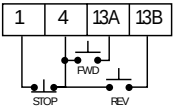 Run Forward / Run Reverse P121 = 13, P122 = 14 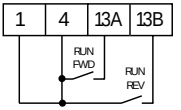 					
P125	Acceleration Time 2	20.0	0.0	{s}	3600	• Selected using TB-13A...TB-13D (P121... P124 = 17) • For S-ramp accel/decel, adjust P106
P126	Deceleration Time 2	20.0	0.0	{s}	3600	
P127	Deceleration Time for Auxiliary Ramp to Stop	20.0	0.0	{s}	3600	• Selected using TB-13A...TB-13D (P121... P124 = 19). • For S-ramp accel/decel, adjust P106 • Once executed, this ramp time has priority over P105 and P126.
P129	Automatic Accel/ Decel rate switch threshold	0.0	0.0	{Hz}	1000	If Actual Frequency < P129 Use Accel/decel time #2 (P125/P126) If Actual Frequency > P129 Use Accel/decel time #1 (P104/P105)
P131	Preset Speed #1	0.0	0.0	{Hz}	500	PRESET SPEED / 13A / 13B / 13C / 13D 1 / X / -- / -- / -- 2 / -- / X / -- / -- 3 / -- / -- / X / -- 4 / X / X / -- / -- 4 (alternate) / -- / -- / -- / X 5 / X / -- / X / -- 6 / -- / X / X / -- 7 / X / X / X / -- 8 (alternate) / -- / X / -- / X 8 (alternate / -- / -- / X / X • Speed setting is used by P158 • 13D available on 15HP (11kW) & higher drives.
P132	Preset Speed #2	0.0	0.0	{Hz}	500	
P133	Preset Speed #3	0.0	0.0	{Hz}	500	
P134	Preset Speed #4	0.0	0.0	{Hz}	500	
P135	Preset Speed #5	0.0	0.0	{Hz}	500	
P136	Preset Speed #6	0.0	0.0	{Hz}	500	
P137	Preset Speed #7	0.0	0.0	{Hz}	500	
P138	Preset Speed #8	0.0	0.0	{Hz}	500	

Code		Possible Settings		IMPORTANT
No.	Name	Default	Selection	
P140	Relay Output TB-16, 17	0	0 None	Disables the output
			1 Run	Energizes when the drive is running
			2 Reverse	Energizes when reverse rotation is active
			3 Fault	De-energizes when the drive trips, or power is removed
			4 Inverse Fault	Energizes when the drive trips
			5 Fault Lockout	P110 = 3...6: De-energizes if all restart attempts fail
			6 At Speed	Energizes when output frequency = commanded frequency
			7 Above Preset Speed #6	Energizes when output frequency > P136
			8 Current Limit	Energizes when motor current = P171
			9 Follower Loss (4-20 mA)	Energizes when 4-20 mA signal is < P164
			10 Loss of Load	Energizes when motor load drops below P145; Refer to P146 also
			11 Local Keypad Control Active	Energizes when the selected source is active for start control
			12 Terminal Strip Control Active	
			13 Remote Keypad Control Active	
			14 Network Control Active	
			15 Standard Reference Active	Energizes when P101 reference is active
			16 Auto Reference Active	Energizes when Auto Reference is activated using TB-13 input; refer to P121...P124
			17 Sleep Mode Active	Refer to P240...P242
			18 PID Feedback < Min. Alarm	Energizes when PID feedback signal < P214
			19 Inverse PID Feedback < Min. Alarm	De-energizes when PID feedback signal < P214
			20 PID Feedback > Max Alarm	Energizes when PID feedback signal > P215
			21 Inverse PID Feedback > Max Alarm	De-energizes when PID feedback signal > P215
			22 PID Feedback within Min/Max Alarm range	Energizes when PID feedback signal is within the Min/Max Alarm range; refer to P214, P215
			23 PID Feedback outside Min/Max Alarm range	Energizes when PID feedback signal is outside the Min/Max Alarm range; refer to P214, P215
			24 Reserved	
			25 Network Controlled	SMV models < 15HP (11kW) require an optional communication module (refer to the network module documentation).
			26 Loss of 0-10V Input	Energizes when 0-10V signal is < P158
			27 Sequencer Controlled	State set in individual sequencer segments
			28 Sequencer Active	
			29 Sequencer Suspended	
			30 Sequence Done	End Sequence
			31 Output Frequency = 0.0Hz	Output inactive
P142	TB-14 Output	0	0...23 (same as P140)	
			24 Dynamic Braking	For use with Dynamic Braking option
			25...31 (same as P140)	

Code		Possible Settings				IMPORTANT
No.	Name	Default	Selection			
P144	Digital Output Inversion		P144 / Invert P142 / Invert P140 0 / NO / NO 1 / NO / YES 2 / YES / NO 3 / YES / YES			Used to invert the selections for P140 (Relay Output) and P142 (TB-14 Output). EXAMPLE: When P140 = 6 (AT SPEED), the relay is energized when output frequency = commanded frequency. IF P144=1 or 3, then P140 is inverted (INVERSE AT SPEED) and the relay is energized when the output frequency does **not** equal the command frequency.
			NOTE Inverting P140 or P142 when the parameter is set to NONE (0) will result in the output being energized continuously.			
			NOTE For SMVector drives rated at 0.33 to 10 HP (0.25 to 7.5 kW), P144 is only available with software versions 3.0 and higher (refer to P501).			
P145	Loss of Load Threshold	0	0	{%}	200	P140, P142 = 10: Output will energize if motor load falls below the P145 value longer than the P146 time
P146	Loss of Load Delay	0.0	0.0	{s}	240.0	
P149	Analog Output Offset	0.0	0	{%}	100	Scaled value. Example: P149 = 10%, Scaled variable = freq, P150 = 1, P152 = 60Hz; then TB30 = 0VDC below 6Hz
P150	TB-30 Output	0	0 None			2-10 VDC signal can be converted to 4-20 mA with a total circuit impedance of 500 Ω
			1 0-10 VDC Output Frequency			
			2 2-10 VDC Output Frequency			
			3 0-10 VDC Load			
			4 2-10 VDC Load			
			5 0-10 VDC Torque			
			6 2-10 VDC Torque			
			7 0-10 VDC Power (kW)			
			8 2-10 VDC Power (kW)			
			9 Network Controlled			SMV models < 15HP (11kW) require an optional communication module (refer to the network module documentation).
			10 Sequencer Controlled			Value set in individual sequencer segments
P152	TB-30 Scaling: Frequency	60.0	3.0	{Hz}	2000	If P150 = 1 or 2, sets the frequency at which output equals 10 VDC
P153	TB-30 Scaling: Load	200	10	{%}	500	If P150 = 3 or 4, sets the Load (as a percent of drive current rating) at which output equals 10 VDC.
P154	TB-30 Scaling: Torque	100	10	{%}	1000	If P150 = 5 or 6, sets the Torque (as a percent of motor rated torque) at which output equals 10 VDC
P155	TB-30 Scaling: Power (kW)	1.0	0.1	{kW}	200.0	If P150 = 7 or 8, sets the power at which output equals 10 VDC

4.5.3 Advanced Setup Parameters

Code		Possible Settings				IMPORTANT
No.	Name	Default	Selection			
P 156	Analog Inputs Configuration	0	0 TB5: (0-10 VDC); TB25: (4-20mA) 1 TB5: (0 - 5 VDC); TB25: (4-20mA) 2 TB5: (2 - 10 VDC); TB25: (4-20mA) 4 TB5: (0-10 VDC); TB25: (0-20mA) 5 TB5: (0 - 5 VDC); TB25: (0-20mA) 6 TB5: (2 - 10 VDC); TB25: (0-20mA)			
P 157	TB5 (0-10V) Analog Input Monitoring Action	0	0 No Action 1 If TB5 < P158 - Trip Fault F_FAU 2 If TB5 < P158 - Run Preset #8 3 If TB5 < P158 - Run Preset Seg. #16 4 If TB5 > P158 - Trip Fault F_FAU 5 If TB5 > P158 - Run Preset #8 6 If TB5 > P158 - Run Preset Seg. #16			Selects the reaction to a loss of the 0-10V signal at TB5 500ms is the minimum time above/below Monitoring Level (P158) before triggering the drive to trip or run at a preset speed. For P157 = 3 or 6, the accel/decel time is set in P786. **NOTE:** P157 has priority over P163 and TB-13 presets/auto references (P121-P124)
P 158	TB5 (0-10V) Analog Input Monitoring Level (ML)	0.0	-10.0	{VDC}	10.0	Negative input voltage is not currently supported.
P 159	0-10V Analog Input Deadband	0.0	0	{VDC}	10.0	Not active if [-10 to +10 VDC] option is selected.
P 160	Speed at Minimum Signal	0.0	-999.0	{Hz}	1000	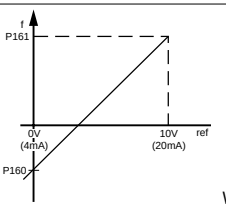 V0111
P 161	Speed at Maximum Signal	60.0	-999.0	{Hz}	1000	
			NOTE • P160 sets the output frequency at 0% analog input • P161 sets the output frequency at 100% analog input • P160 or P161 < 0.0 Hz: For scaling purposes only; does not indicate opposite direction! • P160 > P161: Drive will react inversely to analog input signal			
P 162	Analog Input Filter	0.01	0.00	{s}	10.00	• Adjusts the filter on the analog inputs (TB-5 and TB-25) to reduce the effect of signal noise • The P162 delay time will affect the response time of diagnostic parameters (P520-P523).
P 163	TB-25 (4-20mA) Analog Input Monitoring Action	0	0 No Action 1 If TB25 < P164 - Trip Fault F_FaL 2 If TB25 < P164 - Run Preset #7 3 If TB25 < P164 - Run Preset Seg. #15 4 If TB25 ≥ P164 - Trip Fault F_FaL 5 If TB25 ≥ P164 - Run Preset #7 6 If TB25 ≥ P164 - Run Preset Seg. #15			• Selects the reaction to a loss of the 4-20 mA signal at TB-25. • Signal is considered lost if it falls below the value set in P164 • Digital outputs can also indicate a loss of 4-20 mA signal; see P140, P142 • For P163 = 3 or 6, the accel/decel time is set in P781. **NOTE:** P163 has priority over TB-13 presets/auto references (P121-P124)

Code		Possible Settings				IMPORTANT
No.	Name	Default	Selection			
P 164	TB-25 (4-20mA) Analog Input Monitoring Level	2.0	0.0	{mA}	20.0	
P 165	Base Voltage		15	{V}	1000	Valid for V/Hz mode only. Set voltage for bus compensation in V/Hz mode
P 166	Carrier Frequency	See Notes	0 4 kHz 1 6 kHz 2 8 kHz 3 10 kHz			• As carrier frequency is increased, motor noise is decreased • Observe derating in section 2.3 • Automatic shift to 4 kHz at 120% load • NEMA 4X (IP65) Models: Default = 0 (4kHz) • NEMA 1 (IP31) Models: Default = 1 (6kHz)
P 167 (1)	Base Frequency	60.0	10.0	{Hz}	1500	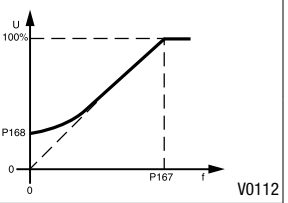
P 168	Fixed Boost		0.0	{%}	40.0	
			NOTE • P167 = rated motor frequency for standard applications • P165, P168 = default setting depends on drive rating			
P 169	Accel Boost	0.0	0.0	{%}	20.0	Accel Boost is only active during acceleration
P 170	Slip Compensation	0.0	0.0	{%}	40.0	Increase P170 until the motor speed no longer changes between no load and full load conditions.
P 171 (1)	Current Limit	Max I	30	{%}	Max I	• When the limit is reached, the drive displays CL (Current Limit), and either the acceleration time increases or the output frequency decreases. • Digital outputs can also indicate when the limit is reached; see P140, P142. • Refer to section 2.3 for the maximum output current Max I (%)
P 172	Current Limit Reduction	0	0 Current Limit Reduction Active - Normal response 1 Current Limit Reduction Active - Fast response 2 Current Limit Reduction Disabled - Normal response 3 Current Limit Reduction Disabled - Fast response			In field weakening, the Current Limit is inversely proportional to the speed.
P 173	Decel Override Time	2.0	0.0	{s}	60.0	Maximum time before drive trips into HF fault.
P 174	DC Brake Voltage	0.0	0.0	{%}	50.0	Setting is a percent of the nominal DC bus voltage.

(1) Any changes to this parameter will not take effect until the drive is stopped.

Code		Possible Settings				IMPORTANT
No.	Name	Default	Selection			
P175	DC Brake Time	0.0	0.0	{s}	999.9	
			NOTE: CONFIRM MOTOR SUITABILITY FOR USE WITH DC BRAKING DC Brake voltage (P174) is applied for the time specified by P175 with the following exceptions: • If P111=1, 3 and P175=999.9 the brake voltage will be applied continuously until a run or fault condition occurs. • If P110=2, 4…6 and P175=999.9, brake voltage will be applied for 15s • If P121…P124=18 and the corresponding TB-13 input is CLOSED, brake voltage will be applied until the TB-13 input is OPENED or a fault condition occurs.			
P176	Keypad Setpoint Single Press Increment	0.1	0.1		100.0	Used for run screen setpoint editing only. If P176 >0.1 then scrolling of keypad setpoint is disabled.
P177 (2)	Speed Units	0	0 Hz 1 RPM 2 % 3 /UNITS 4 NONE			Select the UNITS LED that will be illuminated when the drive is running in speed control mode. For this parameter to be used, P178 must be set to a value other than 0. IF P178 is set to 0, the Hz LED will be illuminated regardless of the value set in P177.
P178	Display Frequency Multiplier	0.00	0.00		650.00	• Allows frequency display to be scaled • P178 = 0.00: Scaling disabled • P178 > 0.00: Display = Actual Frequency X P178
			EXAMPLE If P178 = 29.17 and actual frequency = 60 Hz, then Drive displays 1750 (rpm)			
P179	Run Screen Display	0	0 {Parameter Number}		599	• 0 = Normal Run Screen, this display depends on mode of operation. Refer to section 4.2. • Other selections choose a diagnostic parameter to display (P501…P599). • Parameters P560 - P564 are selectable if the sequencer is enabled (P700 is not 0). P560-P564 are not visible until P700 is enabled.
P180	Oscillation Damping Control	0	0		80	0 = Damping disabled Compensation for resonances within drive
P181	Skip frequency 1	0.0	0.0	{Hz}	500	• Drive will not run in the defined skip range; used to skip over frequencies that cause mechanical vibration • P181 and P182 define the start of the skip ranges • P184 > 0 defines the bandwidth of both ranges.
P182	Skip frequency 2	0.0	0.0	{Hz}	500	
P184	Skip frequency bandwidth	0.0	0.0	{Hz}	10.0	
			NOTE Bandwidth (Hz) = f_s (Hz) + P184 (Hz) f_s = P181 or P182 EXAMPLE: P181 = 18 Hz and P184 = 4 Hz; skip range is from 18 to 22 Hz			
P185	Voltage Midpoint V/Hz characteristic	0	0.0	{V}	P165	Valid only when P300 = 0 or 2. Use with P187 to define midpoint on V/Hz curve.
P187 (2)	Frequency Midpoint V/Hz characteristic	0.0	0.0	{Hz}	P167	Valid only when P300 = 0 or 2. Use with P185 to define midpoint on V/Hz curve.
P189 (3)	Integrated Dynamic Brake		0 Disabled 1 Enabled			

(2) Parameter applicable to SMV models 15HP (11kW) and higher.

(3) Parameter applicable to SMV models 40HP (30kW) and higher.

Code		Possible Settings		IMPORTANT
No.	Name	Default	Selection	
P190	Motor Braking		0 Disabled	Flux brake OFF.
			1 Braking with BUS threshold	When drive is in deceleration and $V_{bus} > V_{deceleration\ freeze}$ (114% of the rated V_{bus}), the flux brake will be turned ON.
			2 Braking always on with deceleration	As long as drive is in deceleration, the flux brake will be ON.
			3 Braking with bus regulator	When drive is in deceleration and $V_{bus} > V_{deceleration\ freeze}$ (114% of the rated V_{bus}), the motor speed will be increased to reduce the bus voltage. Determined by the value in P191, the speed increment = slip speed * P191(%) / 37.
			4 Special	(Consult factory before using)
		⚠	**WARNING** Flux braking can cause heat in the motor. To avoid damage to the motor, use a PTC to protect the motor. If the flux brake is used too frequently, the drive will trip fault "F_PF".	
P191	Motor Brake Level	0	0 {%} 75 (flux braking disabled)	Active when P190 > 0 and drive is in deceleration mode. Use to reduce deceleration time on high inertia loads. **NOTE:** Over usage of P190 can cause frequent 'overload' trips "F.PF" Not active for P300 = 5 (Torque mode)
P192	Motor Braking Deceleration Reduction Level	0.0	0 P167 (base freq) Raising the value of P191 reduces the drive deceleration rate during flux braking.	Active when P190 > 0 and P192 > 0.0, Drive is in deceleration mode. Use to reduce deceleration time on high inertia loads. **NOTE**: Usage of P192 can cause the drive to decelerate faster than settings in P105/P127. Not active for P300 = 5 (Torque mode)
P194	Password	0	0000 9999	• Must enter password to access parameters • P194 = 0000: Disables password
P197	Clear Fault History	0	0 No Action	
			1 Clear Fault History	
P199	Program Selection		0 Operate from User settings	
			1 Operate from OEM settings	Refer to Notes 1, 2 and 3
			2 Reset to OEM default settings	Refer to Note 1
			3 Reset to 60 Hz default settings	• Refer to Note 4 • Parameters are reset to the defaults listed in this manual. • For P199=4, the following exceptions apply: - P103, P152, P161, P167 = 50.0 Hz - P165 = 400V (400/480V drives only) - P304 = 50 Hz - P305 = 1450 RPM - P107 = 0 (480 V drives only)
			4 Reset to 50 Hz default settings	
			5 Translate	Refer to Note 5
		⚠	**WARNING!** Modification of P199 can affect drive functionality! STOP and EXTERNAL FAULT circuitry may be disabled! Check P100 and P121...P124	
		ℹ	**NOTE 1** If the EPM does not contain valid OEM settings, a flashing CF will be displayed when P199 is set to 1 or 2. **NOTE 2** When P199 is set to 1, the drive operates from the OEM settings stored in the EPM Module and no other parameters can be changed (CE will be displayed if attempted). **NOTE 3** Auto Calibration is not possible when operating from OEM Settings. **NOTES 4 and 5 - on next page.**	

Code		Possible Settings		IMPORTANT
No.	Name	Default	Selection	
P199	Program Selection		**NOTE 4** Resetting to 50 and 60 Hz default settings will set the Assertion Level (P120) to "2" (High). P120 may need to be reset for the digital input devices being used. An F_AL fault may occur if P120 and the Assertion switch are not set identically. **NOTE 5** If an EPM that contains data from a previous compatible software version is installed: • The drive will operate according to the previous data, but parameters cannot be changed (cE will be displayed if attempted) • To update the EPM to the current software version, set P199 = 5. The parameters can now be changed but the EPM is incompatible with previous software revisions.	

4.5.4 PID Parameters

Code		Possible Settings		IMPORTANT
No.	Name	Default	Selection	
P200	PID Mode	0	0 Disabled 1 Normal-acting 2 Reverse-acting 3 Normal-acting, Bi-directional 4 Reverse-acting, Bi-directional	• Normal-acting: As feedback increases, motor speed decreases • Reverse-acting: As feedback increases, motor speed increases • PID mode is disabled in Vector Torque mode (P300 = 5) • Selections 3, 4: If P112=1, PID controller output sets the speed, (range -max freq to +max freq)
			NOTE To activate PID mode, one of the TB-13 inputs (P121...P124) must be used to select the Auto Reference that matches the desired PID setpoint reference. If the selected PID setpoint reference uses the same analog signal as the PID feedback (P201), an F_IL fault will occur. **Example:** The desired PID setpoint reference is the keypad (▲ and ▼). Set TB-13x = 6 (Auto Reference: Keypad): • TB-13x = closed: PID mode is active • TB-13x = open: PID mode is disabled and the drive speed will be controlled by the reference selected in P101.	
P201	PID Feedback Source	0	0 4-20 mA (TB-25) 1 0-10 VDC (TB-5) 2 Drive Load (P507) 3 Feedback from Network	Must be set to match the PID feedback signal
P202	PID Decimal Point	1	0 PID Display = XXXX 1 PID Display = XXX.X 2 PID Display = XX.XX 3 PID Display = X.XXX 4 PID Display = .XXXX	Applies to P204, P205, P214, P215, P231...P233, P242, P522, P523
P203 (2)	PID Units	0	0 % 1 /UNITS 2 AMPS 3 NONE	Select the UNITS LED that will be illuminated when the drive is running in PID control mode
P204	Feedback at Minimum Signal	0.0	-99.9 3100.0	Set to match the range of the feedback signal being used
P205	Feedback at Maximum Signal	100.0	-99.9 3100.0	**Example:** Feedback signal is 0 - 300 PSI; P204 = 0.0, P205 = 300.0

(2) Parameter applicable to SMV models 15HP (11kW) and higher.

Code		Possible Settings				IMPORTANT
No.	Name	Default	Selection			
P207	Proportional Gain	5.0	0.0	{%}	1000.0	Used to tune the PID loop: • Increase P207 until system becomes unstable, then decrease P207 by 10-15% • Next, increase P208 until feedback matches setpoint • If required, increase P209 to compensate for sudden changes in feedback
P208	Integral Gain	0.0	0.0	{s}	20.0	
P209	Derivative Gain	0.0	0.0	{s}	20.0	
			NOTE • Derivative Gain is very sensitive to noise on the feedback signal. Use with care. • Derivative Gain is not normally required in pump and fan applications			
P210	PID Setpoint Ramp	20.0	0.0	{s}	100.0	• time of setpoint change from P204 to P205 or vice versa. • Used to smooth the transition from one PID setpoint to another, such as when using the Preset PID Setpoints (P231...P233)
P214	Minimum Alarm	0.0	P204		P205	Use with P140, P142 = 18...23
P215	Maximum Alarm	0.0	P204		P205	
P231	Preset PID Setpoint #1	0.0	P204		P205	TB-13A activated; P121 = 3 and P200 = 1 or 2
P232	Preset PID Setpoint #2	0.0	P204		P205	TB-13B activated; P122 = 3 and P200 = 1 or 2
P233	Preset PID Setpoint #3	0.0	P204		P205	TB-13C activated; P123 = 3 and P200 = 1 or 2
P234(2)	Preset PID Setpoint #4	0.0	P204		P205	TB-13D activated; P124 = 3 and P200 = 1 or 2
P240	Sleep Threshold	0.0	0.0	{Hz}	500.0	• If drive speed < P240 for longer than P241, output frequency = 0.0 Hz; drive display = SLP • P240 = 0.0: Sleep mode is disabled. • P200 = 0…2: Drive will start again when speed command is above P240 • P242 > 0.0: Drive will restart when the PID feedback differs from the setpoint by more than the value of P242 **or** when the PID loop requires a speed above P240.
P241	Sleep Delay	30.0	0.0	{s}	300.0	
P242	Sleep Bandwidth	0.0	0.0 Where: B_{max} = |(P205 - P204)|		B_{max}	
P243	Feedback Sleep Entry Threshold	0.0	P204		P205	Active only when P244 = 1 or 2
P244	Sleep Entry Mode	0	0 Enter SLEEP if Drive Speed <P240			For time longer than P241
			1 Enter SLEEP if Feedback >P243			For time longer than P241 or same as Sel 0
			2 Enter SLEEP if Feedback <P243			For time longer than P241 or same as Sel 0
P245	Sleep Entry Stop Type	0	0 Coast to Stop			
			1 Ramp to Stop			
			2 Stop with P111 settings			
P246	Feedback Recovery from Sleep Threshold	0.0	P204		P205	Active only when P247 = 1 or 2
P247	Sleep Recovery Mode	0	0 Recovery if Speed Setpoint > P240 or if PID feedback differs from setpoint by more than P242			
			1 Recovery only if Feedback < P246			
			2 Recovery only if Feedback > P246			

(2) Parameter applicable to SMV models 15HP (11kW) and higher.

Code		Possible Settings				IMPORTANT
No.	Name	Default	Selection			
P250	Auto Rinse in Sleep Mode	0	0 Disabled 1 Enabled			Activated in sleep mode only. Sleep Recovery cancels Auto Rinse
P251	Time Delay between Auto Rinses	30.0	0.0	{min}	6553.5	Time delay reset by re/entering sleep mode
P252	Auto Rinse Speed	0.0	-500.0	{Hz}	500.0	If P112 = 1, negative sign = reverse direction
P253	Auto Rinse Time	0.0	0.0	{sec}	6553.5	Does not include time to decel back to speed
			Auto Pump Rinse Setup: P250=1 (Enabled) P251=# minutes between each PumpRinse P252=Hz speed of Pump Rinse P253=# seconds Pump Rinse duration			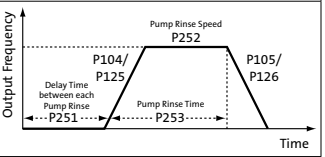
P280	Current Level: Flying Restart Type 2	70.0	0.0	{%}	P171	Maximum current during Type 2 flying restart operation
P281	Decel Time: Flying Restart Type 2	3.0	0.0	{sec}	3600.0	Deceleration rate used during Type 2 flying restart operation

4.5.5 Vector Parameters

Code		Possible Settings				IMPORTANT
No.	Name	Default	Selection			
P300 (1)	Drive Mode	0	0 Constant V/Hz			Constant torque V/Hz control for general applications
			1 Variable V/Hz			Variable torque V/Hz control for centrifugal pump and fan applications
			2 Enhanced Constant V/Hz 3 Enhanced Variable V/Hz			For single or multiple motor applications that require better performance than settings 0 or 1, but cannot use Vector mode, due to: • Missing required motor data • Vector mode causing unstable motor operation
			4 Vector Speed			For single-motor applications requiring higher starting torque and speed regulation
			5 Vector Torque			For single-motor applications requiring torque control independent of speed
			NOTE To configure the drive for either Vector mode or Enhanced V/Hz mode: • P300 = 4, 5: - Set P302...P306 according to motor nameplate - Set P399 = 1 or 2 (if option 1 failed or in case of non-standard motor) - Make sure motor is cold (20° - 25° C) and apply a Start command - Display will indicate CAL for about 40 seconds - Once the calibration is complete, the display will indicate StoP; apply another Start command to actually start the motor - If an attempt is made to start the drive in Vector or Enhanced V/Hz mode before performing the Motor Calibration, the drive will display F_n Id and will not operate • P300 = 2, 3: Same as above but only need to set P302…P304			
P302 (1)	Motor Rated Voltage		0	{V}	600	• Default setting = drive rating • Set to motor nameplate data
P303 (1)	Motor Rated Current		0.1	{A}	500.0	

(1) Any changes to this parameter will not take effect until the drive is stopped.

Code		Possible Settings				IMPORTANT
No.	Name	Default	Selection			
P304 (1)	Motor Rated Frequency	60	0	{Hz}	1000	Set to motor nameplate data
P305 (1)	Motor Rated Speed	1750	300	{RPM}	65000	
P306 (1)	Motor Cosine Phi	0.80	0.40		0.99	
			NOTE If motor cosine phi is not known, use one of the following formulas: cos phi = motor Watts / (motor efficiency X P302 X P303 X 1.732) cos phi = cos [$\sin^{-1}$ (magnetizing current / motor current)]			
P310 (1)	Motor Stator Resistance		0.00	{Ω}	64.00	• P310, 311 default setting depends on drive rating • Will be automatically programmed by P399 • Changing these settings can adversely affect performance. Contact factory technical support prior to changing
P311 (1)	Motor Stator Inductance		0.0	{mH}	2000	
P315	Dead Time Compensation Factor	0.0	-50.0	{%}	+50.0	• Adjust dead time correction from internal default • Takes effect when P399 = 3.
P330	Torque Limit	100	0	{%}	400	When P300 = 5, sets the maximum output torque.
P331	Preset Torque Setpoint #1	100	0	{%}	400	TB-13A activated; P121 = 3 and P300 = 5
P332	Preset Torque Setpoint #2	100	0	{%}	400	TB-13B activated; P122 = 3 and P300 = 5
P333	Preset Torque Setpoint #3	100	0	{%}	400	TB-13C activated; P123 = 3 and P300 = 5
P334 (2)	Preset Torque Setpoint #4	100	0	{%}	400	TB-13D activated; P124 = 3 and P300 = 5
P340 (1)	Current Loop P Gain	0.25	0.00		16.0	Changing these settings can adversely affect performance. Contact factory technical support prior to changing.
P341 (1)	Current Loop I Gain	65	12	{ms}	9990	
P342 (1)	Speed Loop Adjust	0.0	0.0	{%}	20.0	
P343	Slip Compensation Response Filter	99	90	{ms}	9999	Low pass filter time constant for varying the slip compensation response to changes in the motor current.
P399	Motor Auto-calibration	0	0 Calibration Not Done 1 Standard Calibration Enabled 2 Advanced Calibration Enabled 3 Bypass Calibration, enable operation in vector mode w/o Auto Calibration 4 Standard Calibration Complete 5 Advanced Calibration Complete			• If P300 = 4 or 5, motor calibration must be performed if P399 is not set to 3 (bypass calibration). • If P300=2 or 3, motor calibration is recommended. • Use option 2 if option 1 failed or in case of non-standard motors • An alternating CAL / Err will occur if: - attempt motor calibration with P300 = 0 or 1 - motor calibration is attempted before programming motor data
			NOTE: To run the Auto Calibration: – Set P302...P306 according to motor nameplate – Set P399 = 1 or 2 (if option 1 failed or in case of non-standard motor) – Make sure motor is cold (20° - 25° C) – Apply a Start command – Display will indicate CAL for about 40 seconds – Once the calibration is complete, the display will indicate StoP; apply another Start command to actually start the motor – Parameter P399 will now be set to 4 or 5.			

(1) Any changes to this parameter will not take effect until the drive is stopped.

(2) Parameter applicable to SMV models 15HP (11kW) and higher.

4.5.6 Network Parameters

Code		Possible Settings		IMPORTANT
No.	Name	Default	Selection	
P400	Network Protocol		0 Not Active	This parameter setting is based upon the network or I/O module that is installed.
			1 Remote Keypad	
			2 Modbus RTU	
			3 CANopen	
			4 DeviceNet	
			5 Ethernet	
			6 Profibus	
			7 Lecom-B	
			8 I/O Module	
P401	Module Type Installed	0	0 No Module Installed	Module type format: 0xAABC; Drive Display: AA.B.C AA = Module Type B = Major revision C = minor revision
			1 Basic I/O (0x0100, 1.0.0)	
			2 RS485/Rem. Keypad (0x0200, 2.0.0)	
			3 CANopen (0x0300, 3.0.0)	
			11 PROFIBUS (0x1100, 11.0.0)	
			12 Ethernet (0x1200, 12.0.0)	
P402	Module Status	0	0 Not Initialized	
			1 Initialization: Module to EPM	
			2 Initialization: EPM to Module	
			3 Online	
			4 Failed Initialization Error	
			5 Time-out Error	
			6 Initialization Failed	Module type mismatch P401
			7 Initialization Error	Protocol selection mismatch P400
P403	Module Reset	0	0 No Action	Returns module parameters 401…499 to the default values shown in the manual
			1 Reset parameters to default values	
P404	Module Timeout Action	3	0 No Fault	Action to be taken in the event of a Module/ Drive Time-out. Time is fixed at 200ms STOP is by the method selected in P111.
			1 STOP (see P111)	
			2 Quick Stop	
			3 Fault (F_ntF)	
P405	Current Network Fault		0 No Fault	
			1 F.nF1	NetIdle Mode
			2 F.nF2	Loss of Ethernet I/O connection
			3 F.nF3	Network Fault
			4 F.nF4	Explicit Message Timeout
			5 F.nF5	Overall Network Timeout
			6 F.nF6	Overall Explicit Timeout
			7 F.nF7	Overall I/O Message Timeout
P406	Proprietary			Manufacturer specific
P407 … P499		Module Specific Parameters		Refer to the Communications Reference Guide specific to the network or I/O module installed.

4.5.7 Diagnostic Parameters

Code		Display Range (READ ONLY)			IMPORTANT
No.	Name				
P500	Fault History				• Displays the last 8 faults • Format: n.xxx where: n = 1..8, 1 is the newest fault; xxx = fault message (w/o the **F.**) • Refer to section 5.3
P501	Software Version				Format: x.yz
P502	Drive ID				A flashing display indicates that the Drive ID stored in the EPM does not match the drive model it is plugged into.
P503	Internal Code				Alternating Display: xxx-; -yy
P505	DC Bus Voltage	0	{VDC}	1500	
P506	Motor Voltage	0	{VAC}	1000	
P507	Load	0	{%}	255	Motor load as % of drive's output current rating. Refer to section 2.3.
P508	Motor Current	0.0	{A}	1000	Actual motor current
P509	Torque	0	{%}	500	Torque as % of motor rated torque (vector mode only)
P510	Output Power kW	0.00	{kW}	650.0	
P511	Total kWh	0.0	{kWh}	9999999	Alternating display: xxx-; yyyy when value exceeds 9999
P512	Heatsink Temp	0	{°C}	150	Heatsink temperature
P520	0-10 VDC Input	0.0	{VDC}	10.0	Actual value of signal at TB-5 (See P162)
P521	4-20 mA Input	0.0	{mA}	20.0	Actual value of signal at TB-25 (See P162)
P522	TB-5 Feedback	P204		P205	TB-5 signal value scaled to PID feedback units (See P162)
P523	TB-25 Feedback	P204		P205	TB-25 signal value scaled to PID feedback units (See P162)
P524	Network Feedback	P204		P205	Network signal value scaled to PID feedback units
P525	Analog Output	0	{VDC}	10.0	Refer to P150…P155
P527	Actual Output Frequency	0	{Hz}	500.0	
P528	Network Speed Command	0	{Hz}	500.0	Command speed if (Auto: Network) is selected as the speed source
P530	Terminal and Protection Status				Indicates terminal status using segments of the LED display. (Refer to section 4.5.7.1)
P531	Keypad Status				Indicates keypad button status using segments of the LED display. (Refer to section 4.5.7.2)
P540	Total Run Time	0	{h}	9999999	Alternating display: xxx-; yyyy when value exceeds 9999
P541	Total Power On Time	0	{h}	9999999	
P550	Fault History	1		8	• Displays the last 8 faults • Format: n.xxx where: n = 1..8, 1 is the newest fault; xxx = fault message (w/o the **F.**) • Refer to section 5.3
P551	Fault History Time	0	{h}	999999	Display: "n.hh-" "hhhh" "mm.ss" = fault #, hours, seconds The "hhhh" screen is displayed after hours exceed 999.
P552	Fault History Counter	0		255	Number of sequential occurrences of a fault. For example: 3 external faults occur over a period of time with no other errors occurring. Then P552 will indicate 3, P550 will indicate the error EF and P551 will indicate the time of the first fault occurrence.

Code		Display Range (READ ONLY)			IMPORTANT
No.	Name				
P560	Sequencer: Currently Active Segment	0		17	
P561	Sequencer: Time since Start of Active Segment	0.0 0	{P708} {P708}	6553.5 65535	Unit depends on P708 (0.1sec, sec or minutes)
P562	Sequencer: Time Remaining in Active Segment	0.0 0	{P708} {P708}	6553.5 65535	Unit depends on P708 (0.1sec, sec or minutes)
P563	Sequencer: Number of cycles since start	0		65535	
P564	Sequencer: Number of cycles remaining	0		65535	
		NOTE: Parameters P560-P564 are visible only when P700 > 0 (i.e. the sequencer is enabled)			

4.5.7.1 Terminal & Protection Status Display

Parameter P530 allows monitoring of the control terminal points and common drive conditions:

An illuminated LED segment indicates:

- the protective circuit is active (LED 1)
- the Logic Assertion Switch is set to High (+)
- input terminal is asserted (LED 2)
- output terminal is energized (LED 4)
- the Charge Relay is not a terminal, this segment will be illuminated when the Charge Relay is energized (LED 4).

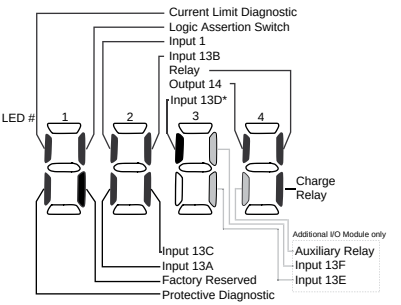

* Input 13D available on 15-60HP (11-45kW) models only

4.5.7.2 Keypad Status Display

Parameter P531 allows monitoring of the keypad pushbuttons:

An illuminated LED segment indicates when the button is depressed.

LED 1 and LED 2 are used to indicate pushbutton presses on a remote keypad that is attached to the drive. LED 3 and LED 4 indicate button presses on the local drive keypad.

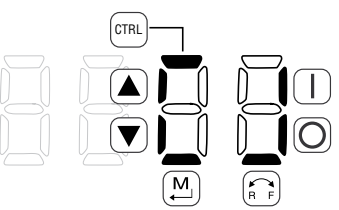

4.5.8 Onboard Communications Parameters 15-60HP (11-45kW)

The P6xx Onboard Communication parameters are applicable to the 15HP (11kW) and higher models only.

Code		Possible Settings		IMPORTANT
No.	Name	Default	Selection	
P600	Network Enable	0	0 Disabled 1 Remote Keypad 2 Modbus 7 Lecom	This parameter enables the onboard network communications.
			NOTE: Onboard Communications will be disabled if: - P600 = 0, or - P600 = 1 and P400 = 1, or - P600 = 2 and P400 = 2, 3, 4, 5, 6 or 7 - P600 = 7 and P400 = 2, 3, 4, 5, 6 or 7	If the onboard communications are disabled, the user will not have access to any of the other P6xx parameters.
P610	Network Address	1	1 - 247	Modbus
		1	1 - 99	Lecom
P611	Network Baud Rate	2	0 2400 bps 2 9600 bps 1 4800 bps 3 19200 bps	Modbus
		0	0 9600 bps 1 4800 bps 2 2400 bps 3 1200 bps 4 19200 bps	Lecom
P612	Network Data Format	0	0 8, N, 2 1 8, N, 1 2 8, E, 1 3 8, O, 1	Modbus Only
P620	Network Control Level	0	0 Monitor Only 1 Parameter Programming 2 Programming and Setpoint Control 3 Full Control	Lecom Only
P624	Network Powerup Start Status	0	0 Quick Stop 1 Controller Inhibit	Lecom Only
P625	Network Timeout	10.0	0.0 - 300.0 seconds	Modbus
		50	0 - 65000 milliseconds	Lecom
P626	Network Timeout Action	4	0 No action 1 Stop (P111) 2 Quick Stop 3 Controller Inhibit 4 Trip Fault, F.nF1	Modbus
		0	0 No action 1 Controller Inhibit 2 Quick Stop 3 Trip Fault, F.nF1	Lecom
P627	Network Messages Received		Read-Only: 0 - 9999	Valid network messages received
			NOTE: When the number of messages exceeds 9999, the counter resets and resumes counting from 0.	

4.5.9 Sequencer Parameters

The P700 Sequencer parameters are listed herein. Refer to section 4.5.7 for P56x Sequencer Diagnostic Parameters. The sequencer function consists of 16 step segments, each individual step segment can have its own ramp time, time spent in individual segment and output frequency entered. The sequencer has 3 different modes to control how the drive moves through each individual step segment: Timer Transition, Step Sequence or Timer and Step Sequence.

P700= 1 (Timer Transition)

Starting at the segment number entered in the “Start Segment” parameter, the drive will automatically move through each of the segments. The time spent in each segment is determined by the values set in the individual “Time in Current Step” parameters.

P700= 2 (Step Sequence)

Starting at the segment number entered in the “Start Segment” parameter the sequencer will only move to the next segment when a rising edge is applied to the highest priority digital input which is programmed to “Step Sequence” selection “24”.

P700= 3 (Timer Transition or Step Sequence)

Starting at the segment number entered in the “Start Segment” parameter, the drive will automatically move through each of the segments. The time spent in each segment is determined by the values set in the individual “Time in Current Step” parameters, however if a rising edge is applied to the highest priority digital input which is programmed to “Step Sequence” selection “24” it will force the sequencer to step into the next segment.

NOTE: A value of ”0” in the “Time in current step” parameter (ex: P712), will result in the segment being skipped.

Code		Possible Settings		IMPORTANT
No.	Name	Default	Selection	
P700	Sequencer Mode	0	0 Disabled 1 Enabled: transition on timer only 2 Enabled: transition on rising edge (P121, 122, 123 = 25 step sequence) 3 Enabled: transition on timer or rising edge	If P700 = 0 and no reference (P121, P101) points to any of the sequence segments, then P701-P799 will not be displayed on the local keypad.
P701	Sequencer: TB13A Trigger Segment	1	1 - 16 TB13A = lowest priority	Asserting TB13A with selection #24 (Start Sequence), starts the sequence operation from the segment specified in this parameter.
P702	Sequencer: TB13B Trigger Segment	1	1 - 16 TB13B: higher priority than TB13A	Asserting TB13B with selection #24 (Start Sequence), starts the sequence operation from the segment specified in this parameter.
P703	Sequencer: TB13C Trigger Segment	1	1 - 16 TB13C: higher priority thanTB13B, A	Asserting TB13C with selection #24 (Start Sequence), starts the sequence operation from the segment specified in this parameter.
P704(2)	Sequencer: TB13D Trigger Segment	1	1 - 16 TB13D: higher priority than TB13C, B, A	Asserting TB13D with selection #24 (Start Sequence), starts the sequence operation from the segment specified in this parameter.
P706	Sequencer: Action after Stop/Start transition or Fault Restart	0	0 Restart at beginning of sequence 1 Restart at beginning of current seg 2 Start at beginning of prior segment 3 Start at beginning of next segment	Pointed by TB13x
P707	Sequencer: Number of cycles	1	1 65535	1 = single scan; 65535 = continuous loop

(2) Parameter applicable to SMV models 15HP (11kW) and higher.

<table>
<tr><th colspan="2">Code</th><th colspan="4">Possible Settings</th><th rowspan="2">IMPORTANT</th></tr>
<tr><th>No.</th><th>Name</th><th>Default</th><th colspan="3">Selection</th></tr>
<tr><td rowspan="2">P708</td><td rowspan="2">Sequencer: Time units/scaling</td><td>0</td><td colspan="3">0 0.1 {sec} 6553.5
1 1 {sec} 65535
2 1 {min} 65535</td><td>Setup units/scaling for all sequencer time related parameters</td></tr>
<tr><td></td><td colspan="4">NOTE:
P708 rescales the following sequencer related parameters:
- Segment Times in current step: P712, P717, P722, P727, P732, P737, P742, P747, P752, P757, P762, P767, P772, P777, P782, P787, P792
- Sequence diagnostic/status: P561, P562</td></tr>
<tr><td></td><td colspan="6">Segment #1</td></tr>
<tr><td>P710</td><td>Segment #1 Frequency Setpoint</td><td>0.0</td><td>-500.0</td><td>{Hz}</td><td>500.0</td><td>If P112 = 1, negative sign forces reverse direction</td></tr>
<tr><td>P711</td><td>Segment #1 Accel/Decel Time</td><td>20.0</td><td>0.0</td><td>{sec}</td><td>3600.0</td><td></td></tr>
<tr><td>P712</td><td>Segment #1 Time in current step</td><td>0.0
0</td><td>0.0
0</td><td>{P708}
{P708}</td><td>6553.5
65535</td><td>Scaling/units depend on P708
Skip segment if time = 0</td></tr>
<tr><td>P713</td><td>Segment #1 Digital Output State</td><td>0</td><td colspan="3"><table><tr><th>Value set in P713</th><th>0</th><th>1</th><th>2</th><th>3</th><th>4</th><th>5</th><th>6</th><th>7</th></tr><tr><td>Relay (Bit 0)</td><td>0</td><td>1</td><td>0</td><td>1</td><td>0</td><td>1</td><td>0</td><td>1</td></tr><tr><td>TB14 (Bit 1)</td><td>0</td><td>0</td><td>1</td><td>1</td><td>0</td><td>0</td><td>1</td><td>1</td></tr><tr><td>I/O option Relay (Bit 2)</td><td>0</td><td>0</td><td>0</td><td>0</td><td>1</td><td>1</td><td>1</td><td>1</td></tr></table>NOTE: P441 is the Relay Output (TB-19, 20, 21) of the optional Digital I/O module (ESVZAL0, ESVZAL1).</td><td>bit = 0: OFF (De-energized)
bit = 1: ON (Energized)
The corresponding digital output/relay must be set to accept data from the sequencer: P140, P142, P441 = 27</td></tr>
<tr><td>P714</td><td>Segment #1 TB30 Analog Output Value</td><td>0.00</td><td>0.00</td><td>{VDC}</td><td>10.00</td><td>TB30 configuration parameter must be set to accept this value: P150 = 10</td></tr>
<tr><td></td><td colspan="6">Segment #2</td></tr>
<tr><td>P715</td><td>Segment #2 Frequency Setpoint</td><td>0.0</td><td>-500.0</td><td>{Hz}</td><td>500.0</td><td>If P112 = 1, negative sign forces reverse direction</td></tr>
<tr><td>P716</td><td>Segment #2 Accel/Decel Time</td><td>20.0</td><td>0.0</td><td>{sec}</td><td>3600.0</td><td></td></tr>
<tr><td>P717</td><td>Segment #2 Time in current step</td><td>0.0
0</td><td>0.0
0</td><td>{P708}
{P708}</td><td>6553.5
65535</td><td>Scaling/units depend on P708
Skip segment if time = 0</td></tr>
<tr><td>P718</td><td>Segment #2 Digital Output State</td><td>0</td><td colspan="3"><table><tr><th>Value set in P718</th><th>0</th><th>1</th><th>2</th><th>3</th><th>4</th><th>5</th><th>6</th><th>7</th></tr><tr><td>Relay (Bit 0)</td><td>0</td><td>1</td><td>0</td><td>1</td><td>0</td><td>1</td><td>0</td><td>1</td></tr><tr><td>TB14 (Bit 1)</td><td>0</td><td>0</td><td>1</td><td>1</td><td>0</td><td>0</td><td>1</td><td>1</td></tr><tr><td>I/O option Relay (Bit 2)</td><td>0</td><td>0</td><td>0</td><td>0</td><td>1</td><td>1</td><td>1</td><td>1</td></tr></table>NOTE: P441 is the Relay Output (TB-19, 20, 21) of the optional Digital I/O module (ESVZAL0, ESVZAL1).</td><td>bit = 0: OFF (De-energized)
bit = 1: ON (Energized)
The corresponding digital output/relay must be set to accept data from the sequencer: P140, P142, P441 = 27</td></tr>
<tr><td>P719</td><td>Segment #2 TB30 Analog Output Value</td><td>0.00</td><td>0.00</td><td>{VDC}</td><td>10.00</td><td>TB30 configuration parameter must be set to accept this value: P150 = 10</td></tr>
</table>

Code		Possible Settings				IMPORTANT
No.	Name	Default	Selection			
	Segment #3					
P720	Segment #3 Frequency Setpoint	0.0	-500.0	{Hz}	500.0	If P112 = 1, negative sign forces reverse direction
P721	Segment #3 Accel/Decel Time	20.0	0.0	{sec}	3600.0	
P722	Segment #3 Time in current step	0.0 0	0.0 0	{P708} {P708}	6553.5 65535	Scaling/units depend on P708 Skip segment if time = 0
P723	Segment #3 Digital Output State	0	**Value set in P723** | **0** | **1** | **2** | **3** | **4** | **5** | **6** | **7** Relay (Bit 0) | 0 | 1 | 0 | 1 | 0 | 1 | 0 | 1 TB14 (Bit 1) | 0 | 0 | 1 | 1 | 0 | 0 | 1 | 1 I/O option Relay (Bit 2) | 0 | 0 | 0 | 0 | 1 | 1 | 1 | 1 NOTE: P441 is the Relay Output (TB-19, 20, 21) of the optional Digital I/O module (ESVZAL0, ESVZAL1).			bit = 0: OFF (De-energized) bit = 1: ON (Energized) The corresponding digital output/relay must be set to accept data from the sequencer: P140, P142, P441 = 27
P724	Segment #3 TB30 Analog Output Value	0.00	0.00	{VDC}	10.00	TB30 configuration parameter must be set to accept this value: P150 = 10
	Segment #4					
P725	Segment #4 Frequency Setpoint	0.0	-500.0	{Hz}	500.0	If P112 = 1, negative sign forces reverse direction
P726	Segment #4 Accel/Decel Time	20.0	0.0	{sec}	3600.0	
P727	Segment #4 Time in current step	0.0 0	0.0 0	{P708} {P708}	6553.5 65535	Scaling/units depend on P708 Skip segment if time = 0
P728	Segment #4 Digital Output State	0	**Value set in P728** | **0** | **1** | **2** | **3** | **4** | **5** | **6** | **7** Relay (Bit 0) | 0 | 1 | 0 | 1 | 0 | 1 | 0 | 1 TB14 (Bit 1) | 0 | 0 | 1 | 1 | 0 | 0 | 1 | 1 I/O option Relay (Bit 2) | 0 | 0 | 0 | 0 | 1 | 1 | 1 | 1 NOTE: P441 is the Relay Output (TB-19, 20, 21) of the optional Digital I/O module (ESVZAL0, ESVZAL1).			bit = 0: OFF (De-energized) bit = 1: ON (Energized) The corresponding digital output/relay must be set to accept data from the sequencer: P140, P142, P441 = 27
P729	Segment #4 TB30 Analog Output Value	0.00	0.00	{VDC}	10.00	TB30 configuration parameter must be set to accept this value: P150 = 10
	Segment #5					
P730	Segment #5 Frequency Setpoint	0.0	-500.0	{Hz}	500.0	If P112 = 1, negative sign forces reverse direction
P731	Segment #5 Accel/Decel Time	20.0	0.0	{sec}	3600.0	
P732	Segment #5 Time in current step	0.0 0	0.0 0	{P708} {P708}	6553.5 65535	Scaling/units depend on P708 Skip segment if time = 0
P733	Segment #5 Digital Output State	0	**Value set in P733** | **0** | **1** | **2** | **3** | **4** | **5** | **6** | **7** Relay (Bit 0) | 0 | 1 | 0 | 1 | 0 | 1 | 0 | 1 TB14 (Bit 1) | 0 | 0 | 1 | 1 | 0 | 0 | 1 | 1 I/O option Relay (Bit 2) | 0 | 0 | 0 | 0 | 1 | 1 | 1 | 1 NOTE: P441 is the Relay Output (TB-19, 20, 21) of the optional Digital I/O module (ESVZAL0, ESVZAL1).			bit = 0: OFF (De-energized) bit = 1: ON (Energized) The corresponding digital output/relay must be set to accept data from the sequencer: P140, P142, P441 = 27
P734	Segment #5 TB30 Analog Output Value	0.00	0.00	{VDC}	10.00	TB30 configuration parameter must be set to accept this value: P150 = 10

Code		Possible Settings				IMPORTANT
No.	Name	Default	Selection			
	Segment #6					
P735	Segment #6 Frequency Setpoint	0.0	-500.0	{Hz}	500.0	If P112 = 1, negative sign forces reverse direction
P736	Segment #6 Accel/Decel Time	20.0	0.0	{sec}	3600.0	
P737	Segment #6 Time in current step	0.0 0	0.0 0	{P708} {P708}	6553.5 65535	Scaling/units depend on P708 Skip segment if time = 0
P738	Segment #6 Digital Output State	0	**Value set in P738** | **0** | **1** | **2** | **3** | **4** | **5** | **6** | **7** Relay (Bit 0) | 0 | 1 | 0 | 1 | 0 | 1 | 0 | 1 TB14 (Bit 1) | 0 | 0 | 1 | 1 | 0 | 0 | 1 | 1 I/O option Relay (Bit 2) | 0 | 0 | 0 | 0 | 1 | 1 | 1 | 1 NOTE: P441 is the Relay Output (TB-19, 20, 21) of the optional Digital I/O module (ESVZAL0, ESVZAL1).			bit = 0: OFF (De-energized) bit = 1: ON (Energized) The corresponding digital output/relay must be set to accept data from the sequencer: P140, P142, P441 = 27
P739	Segment #6 TB30 Analog Output Value	0.00	0.00	{VDC}	10.00	TB30 configuration parameter must be set to accept this value: P150 = 10
	Segment #7					
P740	Segment #7 Frequency Setpoint	0.0	-500.0	{Hz}	500.0	If P112 = 1, negative sign forces reverse direction
P741	Segment #7 Accel/Decel Time	20.0	0.0	{sec}	3600.0	
P742	Segment #7 Time in current step	0.0 0	0.0 0	{P708} {P708}	6553.5 65535	Scaling/units depend on P708 Skip segment if time = 0
P743	Segment #7 Digital Output State	0	**Value set in P743** | **0** | **1** | **2** | **3** | **4** | **5** | **6** | **7** Relay (Bit 0) | 0 | 1 | 0 | 1 | 0 | 1 | 0 | 1 TB14 (Bit 1) | 0 | 0 | 1 | 1 | 0 | 0 | 1 | 1 I/O option Relay (Bit 2) | 0 | 0 | 0 | 0 | 1 | 1 | 1 | 1 NOTE: P441 is the Relay Output (TB-19, 20, 21) of the optional Digital I/O module (ESVZAL0, ESVZAL1).			bit = 0: OFF (De-energized) bit = 1: ON (Energized) The corresponding digital output/relay must be set to accept data from the sequencer: P140, P142, P441 = 27
P744	Segment #7 TB30 Analog Output Value	0.00	0.00	{VDC}	10.00	TB30 configuration parameter must be set to accept this value: P150 = 10
	Segment #8					
P745	Segment #8 Frequency Setpoint	0.0	-500.0	{Hz}	500.0	If P112 = 1, negative sign forces reverse direction
P746	Segment #8 Accel/Decel Time	20.0	0.0	{sec}	3600.0	
P747	Segment #8 Time in current step	0.0 0	0.0 0	{P708} {P708}	6553.5 65535	Scaling/units depend on P708 Skip segment if time = 0
P748	Segment #8 Digital Output State	0	**Value set in P748** | **0** | **1** | **2** | **3** | **4** | **5** | **6** | **7** Relay (Bit 0) | 0 | 1 | 0 | 1 | 0 | 1 | 0 | 1 TB14 (Bit 1) | 0 | 0 | 1 | 1 | 0 | 0 | 1 | 1 I/O option Relay (Bit 2) | 0 | 0 | 0 | 0 | 1 | 1 | 1 | 1 NOTE: P441 is the Relay Output (TB-19, 20, 21) of the optional Digital I/O module (ESVZAL0, ESVZAL1).			bit = 0: OFF (De-energized) bit = 1: ON (Energized) The corresponding digital output/relay must be set to accept data from the sequencer: P140, P142, P441 = 27
P749	Segment #8 TB30 Analog Output Value	0.00	0.00	{VDC}	10.00	TB30 configuration parameter must be set to accept this value: P150 = 10

<table>
<tr><th colspan="2">Code</th><th colspan="3">Possible Settings</th><th rowspan="2">IMPORTANT</th></tr>
<tr><th>No.</th><th>Name</th><th>Default</th><th colspan="2">Selection</th></tr>
<tr><td></td><td colspan="5">Segment #9</td></tr>
<tr><td>P750</td><td>Segment #9
Frequency Setpoint</td><td>0.0</td><td>-500.0</td><td>{Hz}
{sec}</td><td>500.0
3600.0</td><td>If P112 = 1, negative sign forces reverse direction</td></tr>
<tr><td>P751</td><td>Segment #9
Accel/Decel Time</td><td>20.0</td><td>0.0</td><td></td><td></td><td></td></tr>
<tr><td>P752</td><td>Segment #9
Time in current step</td><td>0.0
0</td><td>0.0
0</td><td>{P708}
{P708}</td><td>6553.5
65535</td><td>Scaling/units depend on P708
Skip segment if time = 0</td></tr>
<tr><td>P753</td><td>Segment #9
Digital Output State</td><td>0</td><td colspan="3"><table><tr><th>Value set in P753</th><th>0</th><th>1</th><th>2</th><th>3</th><th>4</th><th>5</th><th>6</th><th>7</th></tr><tr><td>Relay (Bit 0)</td><td>0</td><td>1</td><td>0</td><td>1</td><td>0</td><td>1</td><td>0</td><td>1</td></tr><tr><td>TB14 (Bit 1)</td><td>0</td><td>0</td><td>1</td><td>1</td><td>0</td><td>0</td><td>1</td><td>1</td></tr><tr><td>I/O option Relay (Bit 2)</td><td>0</td><td>0</td><td>0</td><td>0</td><td>1</td><td>1</td><td>1</td><td>1</td></tr></table>NOTE: P441 is the Relay Output (TB-19, 20, 21) of the optional Digital I/O module (ESVZAL0, ESVZAL1).</td><td>bit = 0: OFF (De-energized)
bit = 1: ON (Energized)
The corresponding digital output/relay must be set to accept data from the sequencer: P140, P142, P441 = 27</td></tr>
<tr><td>P754</td><td>Segment #9 TB30
Analog Output
Value</td><td>0.00</td><td>0.00</td><td>{VDC}</td><td>10.00</td><td>TB30 configuration parameter must be set to accept this value: P150 = 10</td></tr>
<tr><td></td><td colspan="5">Segment #10</td></tr>
<tr><td>P755</td><td>Segment #10
Frequency Setpoint</td><td>0.0</td><td>-500.0</td><td>{Hz}</td><td>500.0</td><td>If P112 = 1, negative sign forces reverse direction</td></tr>
<tr><td>P756</td><td>Segment #10
Accel/Decel Time</td><td>20.0</td><td>0.0</td><td>{sec}</td><td>3600.0</td><td></td></tr>
<tr><td>P757</td><td>Segment #10
Time in current step</td><td>0.0
0</td><td>0.0
0</td><td>{P708}
{P708}</td><td>6553.5
65535</td><td>Scaling/units depend on P708
Skip segment if time = 0</td></tr>
<tr><td>P758</td><td>Segment #10
Digital Output State</td><td>0</td><td colspan="3"><table><tr><th>Value set in P758</th><th>0</th><th>1</th><th>2</th><th>3</th><th>4</th><th>5</th><th>6</th><th>7</th></tr><tr><td>Relay (Bit 0)</td><td>0</td><td>1</td><td>0</td><td>1</td><td>0</td><td>1</td><td>0</td><td>1</td></tr><tr><td>TB14 (Bit 1)</td><td>0</td><td>0</td><td>1</td><td>1</td><td>0</td><td>0</td><td>1</td><td>1</td></tr><tr><td>I/O option Relay (Bit 2)</td><td>0</td><td>0</td><td>0</td><td>0</td><td>1</td><td>1</td><td>1</td><td>1</td></tr></table>NOTE: P441 is the Relay Output (TB-19, 20, 21) of the optional Digital I/O module (ESVZAL0, ESVZAL1).</td><td>bit = 0: OFF (De-energized)
bit = 1: ON (Energized)
The corresponding digital output/relay must be set to accept data from the sequencer: P140, P142, P441 = 27</td></tr>
<tr><td>P759</td><td>Segment #10 TB30
Analog Output
Value</td><td>0.00</td><td>0.00</td><td>{VDC}</td><td>10.00</td><td>TB30 configuration parameter must be set to accept this value: P150 = 10</td></tr>
<tr><td></td><td colspan="5">Segment #11</td></tr>
<tr><td>P760</td><td>Segment #11
Frequency Setpoint</td><td>0.0</td><td>-500.0</td><td>{Hz}</td><td>500.0</td><td>If P112 = 1, negative sign forces reverse direction</td></tr>
<tr><td>P761</td><td>Segment #11
Accel/Decel Time</td><td>20.0</td><td>0.0</td><td>{sec}</td><td>3600.0</td><td></td></tr>
<tr><td>P762</td><td>Segment #11
Time in current step</td><td>0.0
0</td><td>0.0
0</td><td>{P708}
{P708}</td><td>6553.5
65535</td><td>Scaling/units depend on P708
Skip segment if time = 0</td></tr>
<tr><td>P763</td><td>Segment #11
Digital Output State</td><td>0</td><td colspan="3"><table><tr><th>Value set in P763</th><th>0</th><th>1</th><th>2</th><th>3</th><th>4</th><th>5</th><th>6</th><th>7</th></tr><tr><td>Relay (Bit 0)</td><td>0</td><td>1</td><td>0</td><td>1</td><td>0</td><td>1</td><td>0</td><td>1</td></tr><tr><td>TB14 (Bit 1)</td><td>0</td><td>0</td><td>1</td><td>1</td><td>0</td><td>0</td><td>1</td><td>1</td></tr><tr><td>I/O option Relay (Bit 2)</td><td>0</td><td>0</td><td>0</td><td>0</td><td>1</td><td>1</td><td>1</td><td>1</td></tr></table>NOTE: P441 is the Relay Output (TB-19, 20, 21) of the optional Digital I/O module (ESVZAL0, ESVZAL1).</td><td>bit = 0: OFF (De-energized)
bit = 1: ON (Energized)
The corresponding digital output/relay must be set to accept data from the sequencer: P140, P142, P441 = 27</td></tr>
<tr><td>P764</td><td>Segment #11 TB30
Analog Output
Value</td><td>0.00</td><td>0.00</td><td>{VDC}</td><td>10.00</td><td>TB30 configuration parameter must be set to accept this value: P150 = 10</td></tr>
</table>

Code		Possible Settings				IMPORTANT
No.	Name	Default	Selection			
	Segment #12					
P765	Segment #12 Frequency Setpoint	0.0	-500.0	{Hz}	500.0	If P112 = 1, negative sign forces reverse direction
P766	Segment #12 Accel/Decel Time	20.0	0.0	{sec}	3600.0	
P767	Segment #12 Time in current step	0.0 0	0.0 0	{P708} {P708}	6553.5 65535	Scaling/units depend on P708 Skip segment if time = 0
P768	Segment #12 Digital Output State	0	**Value set in P768** | **0** | **1** | **2** | **3** | **4** | **5** | **6** | **7** Relay (Bit 0) | 0 | 1 | 0 | 1 | 0 | 1 | 0 | 1 TB14 (Bit 1) | 0 | 0 | 1 | 1 | 0 | 0 | 1 | 1 I/O option Relay (Bit 2) | 0 | 0 | 0 | 0 | 1 | 1 | 1 | 1 NOTE: P441 is the Relay Output (TB-19, 20, 21) of the optional Digital I/O module (ESVZAL0, ESVZAL1).			bit = 0: OFF (De-energized) bit = 1: ON (Energized) The corresponding digital output/relay must be set to accept data from the sequencer: P140, P142, P441 = 27
P769	Segment #12 TB30 Analog Output Value	0.00	0.00	{VDC}	10.00	TB30 configuration parameter must be set to accept this value: P150 = 10
	Segment #13					
P770	Segment #13 Frequency Setpoint	0.0	-500.0	{Hz}	500.0	If P112 = 1, negative sign forces reverse direction
P771	Segment #13 Accel/Decel Time	20.0	0.0	{sec}	3600.0	
P772	Segment #13 Time in current step	0.0 0	0.0 0	{P708} {P708}	6553.5 65535	Scaling/units depend on P708 Skip segment if time = 0
P773	Segment #13 Digital Output State	0	**Value set in P773** | **0** | **1** | **2** | **3** | **4** | **5** | **6** | **7** Relay (Bit 0) | 0 | 1 | 0 | 1 | 0 | 1 | 0 | 1 TB14 (Bit 1) | 0 | 0 | 1 | 1 | 0 | 0 | 1 | 1 I/O option Relay (Bit 2) | 0 | 0 | 0 | 0 | 1 | 1 | 1 | 1 NOTE: P441 is the Relay Output (TB-19, 20, 21) of the optional Digital I/O module (ESVZAL0, ESVZAL1).			bit = 0: OFF (De-energized) bit = 1: ON (Energized) The corresponding digital output/relay must be set to accept data from the sequencer: P140, P142, P441 = 27
P774	Segment #13 TB30 Analog Output Value	0.00	0.00	{VDC}	10.00	TB30 configuration parameter must be set to accept this value: P150 = 10
	Segment #14					
P775	Segment #14 Frequency Setpoint	0.0	-500.0	{Hz}	500.0	If P112 = 1, negative sign forces reverse direction
P776	Segment #14 Accel/Decel Time	20.0	0.0	{sec}	3600.0	
P777	Segment #14 Time in current step	0.0 0	0.0 0	{P708} {P708}	6553.5 65535	Scaling/units depend on P708 Skip segment if time = 0
P778	Segment #14 Digital Output State	0	**Value set in P778** | **0** | **1** | **2** | **3** | **4** | **5** | **6** | **7** Relay (Bit 0) | 0 | 1 | 0 | 1 | 0 | 1 | 0 | 1 TB14 (Bit 1) | 0 | 0 | 1 | 1 | 0 | 0 | 1 | 1 I/O option Relay (Bit 2) | 0 | 0 | 0 | 0 | 1 | 1 | 1 | 1 NOTE: P441 is the Relay Output (TB-19, 20, 21) of the optional Digital I/O module (ESVZAL0, ESVZAL1).			bit = 0: OFF (De-energized) bit = 1: ON (Energized) The corresponding digital output/relay must be set to accept data from the sequencer: P140, P142, P441 = 27
P779	Segment #14 TB30 Analog Output Value	0.00	0.00	{VDC}	10.00	TB30 configuration parameter must be set to accept this value: P150 = 10

Code		Possible Settings				IMPORTANT
No.	Name	Default	Selection			
	Segment #15					
P780	Segment #15 Frequency Setpoint	0.0	-500.0	{Hz}	500.0	If P112 = 1, negative sign forces reverse direction
P781	Segment #15 Accel/Decel Time	20.0	0.0	{sec}	3600.0	
P782	Segment #15 Time in current step	0.0 0	0.0 0	{P708} {P708}	6553.5 65535	Scaling/units depend on P708 Skip segment if time = 0
P783	Segment #15 Digital Output State	0	**Value set in P783** | **0** | **1** | **2** | **3** | **4** | **5** | **6** | **7** Relay (Bit 0) | 0 | 1 | 0 | 1 | 0 | 1 | 0 | 1 TB14 (Bit 1) | 0 | 0 | 1 | 1 | 0 | 0 | 1 | 1 I/O option Relay (Bit 2) | 0 | 0 | 0 | 0 | 1 | 1 | 1 | 1 NOTE: P441 is the Relay Output (TB-19, 20, 21) of the optional Digital I/O module (ESVZAL0, ESVZAL1).			bit = 0: OFF (De-energized) bit = 1: ON (Energized) The corresponding digital output/relay must be set to accept data from the sequencer: P140, P142, P441 = 27
P784	Segment #15 TB30 Analog Output Value	0.00	0.00	{VDC}	10.00	TB30 configuration parameter must be set to accept this value: P150 = 10
	Segment #16					
P785	Segment #16 Frequency Setpoint	0.0	-500.0	{Hz}	500.0	If P112 = 1, negative sign forces reverse direction
P786	Segment #16 Accel/Decel Time	20.0	0.0	{sec}	3600.0	
P787	Segment #16 Time in current step	0.0 0	0.0 0	{P708} {P708}	6553.5 65535	Scaling/units depend on P708 Skip segment if time = 0
P788	Segment #16 Digital Output State	0	**Value set in P788** | **0** | **1** | **2** | **3** | **4** | **5** | **6** | **7** Relay (Bit 0) | 0 | 1 | 0 | 1 | 0 | 1 | 0 | 1 TB14 (Bit 1) | 0 | 0 | 1 | 1 | 0 | 0 | 1 | 1 I/O option Relay (Bit 2) | 0 | 0 | 0 | 0 | 1 | 1 | 1 | 1 NOTE: P441 is the Relay Output (TB-19, 20, 21) of the optional Digital I/O module (ESVZAL0, ESVZAL1).			bit = 0: OFF (De-energized) bit = 1: ON (Energized) The corresponding digital output/relay must be set to accept data from the sequencer: P140, P142, P441 = 27
P789	Segment #16 TB30 Analog Output Value	0.00	0.00	{VDC}	10.00	TB30 configuration parameter must be set to accept this value: P150 = 10
	End Segment					
P790	End Segment: Frequency Setpoint	0.0	-500.0	{Hz}	500.0	If P112 = 1, negative sign forces reverse direction
P791	End Segment: Accel/Decel Time	5.0	0.0	{sec}	3600.0	
P792	End Segment: Delay before P793, 794 & 795 activation		0.0 0	{P708} {P708}	6553.5 65535	Scaling/units depend on P708
P793	End Segment: Digital Output State		**Value set in P793** | **0** | **1** | **2** | **3** | **4** | **5** | **6** | **7** Relay (Bit 0) | 0 | 1 | 0 | 1 | 0 | 1 | 0 | 1 TB14 (Bit 1) | 0 | 0 | 1 | 1 | 0 | 0 | 1 | 1 I/O option Relay (Bit 2) | 0 | 0 | 0 | 0 | 1 | 1 | 1 | 1 NOTE: P441 is the Relay Output (TB-19, 20, 21) of the optional Digital I/O module (ESVZAL0, ESVZAL1).			bit = 0: OFF (De-energized) bit = 1: ON (Energized) The corresponding digital output/relay must be set to accept data from the sequencer: P140, P142, P441 = 27

Code		Possible Settings		IMPORTANT
No.	Name	Default	Selection	
P794	End Segment: TB30 Analog Output Value	0.00	0.00 {VDC} 10.00	TB30 configuration parameter must be set to accept this value: P150 = 10
P795	End Segment: Drive Action	0	0 Keep Running 1 Stop (based on P111) 2 Coast to Stop 3 Quick Stop (per P127) 4 Coast with DC Brake 5 Ramp with DC Brake	Recovery: Toggling the START SEQUENCE will start the cycle from 'end segment Stop' or 'end segment DC Brake'.
		⚠	**WARNING!** If P795 = 0 then toggling the start sequence input will also restart the sequencer cycle but in the interim where TB13X is open the drive will ramp to the standard or specified alternate speed source depending on the drive configuration.	

⚠ **WARNING**

If the input defined to "Start Sequence" is opened during a sequence, the drive will exit sequencer mode and will run at the specified standard or alternate speed source (dependent on drive configuration).

4.5.9.1 Sequencer Flow Diagram Left

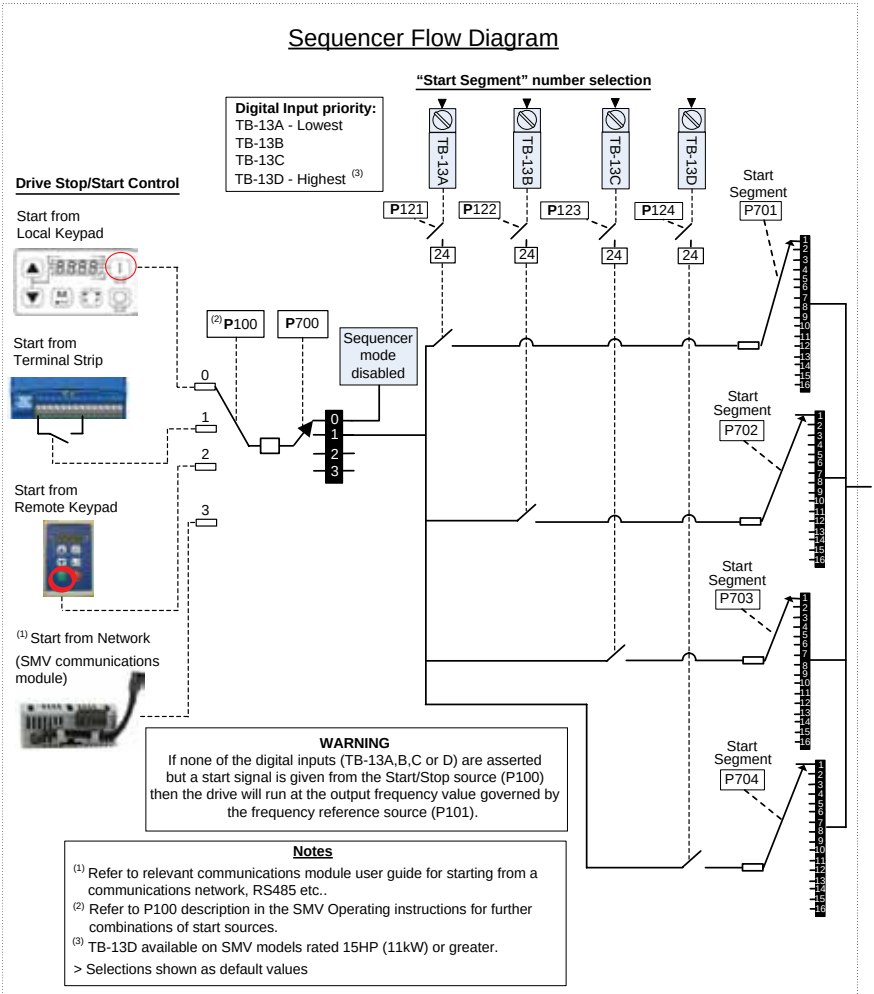

WARNING
If the input defined to "Start Sequence" is opened during a sequence, the drive will exit sequencer mode and will run at the specified standard or alternate speed source (dependent on drive configuration).

4.5.9.2 Sequencer Flow Diagram Right

Action after Stop/Start (P100) transition/digital input (if setup for sequencer mode) transition or restart after trip.	
P706	**Action**
0	Restart at beginning of sequence (pointed by TB13x)
1	Restart at beginning of current segment
2	Start at beginning of prior segment
3	Start at beginning of next segment

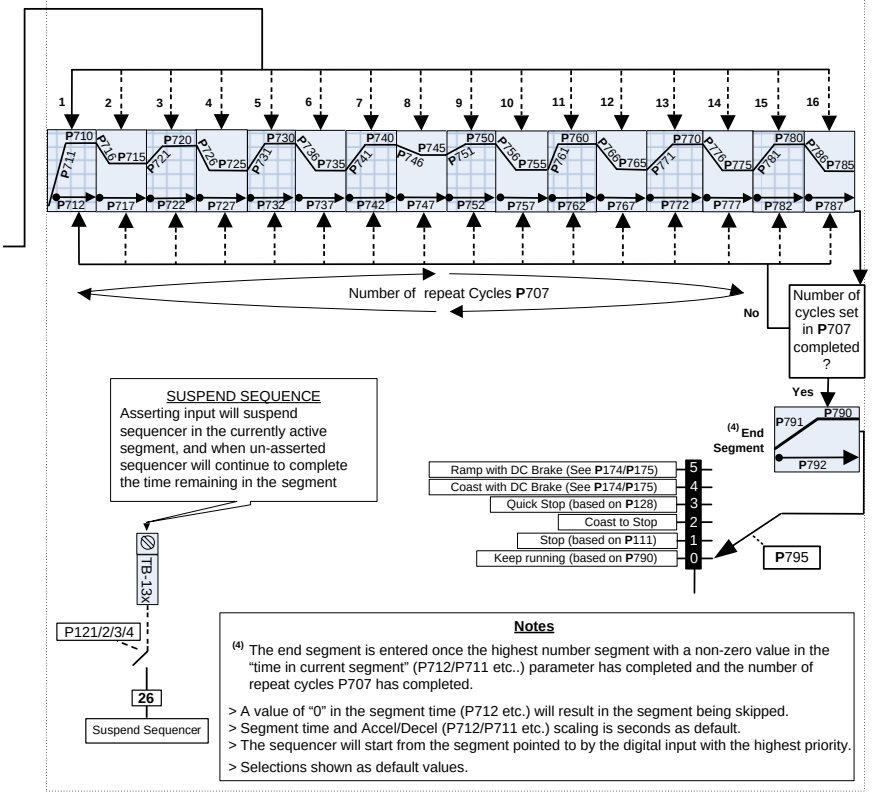

Notes

(4) The end segment is entered once the highest number segment with a non-zero value in the "time in current segment" (P712/P711 etc..) parameter has completed and the number of repeat cycles P707 has completed.

> A value of "0" in the segment time (P712 etc.) will result in the segment being skipped.
> Segment time and Accel/Decel (P712/P711 etc.) scaling is seconds as default.
> The sequencer will start from the segment pointed to by the digital input with the highest priority.
> Selections shown as default values.

4.5.9.3 Sequencer Status

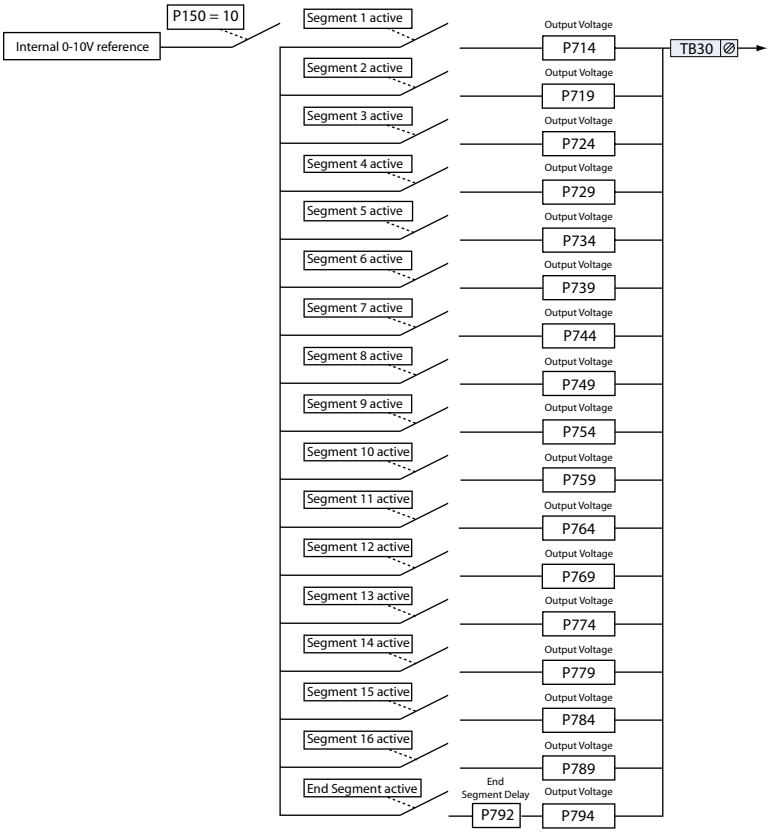

NOTE
On the “End Segment”, the output voltage is not present until after the end segment delay P792 has expired. On the other segments the output voltage is present on entry to the segment. The same is true for the digital outputs.

(1) The drive can only be restarted if the error message has been reset.

5 Troubleshooting and Diagnostics

5.1 Status/Warning Messages

Status / Warning		Cause	Remedy
br	DC-injection brake active	DC-injection brake activated • activation of digital input (P121...P124 = 18) • automatically (P110 = 2, 4...6) • automatically (P111 = 1, 3)	Deactivate DC-injection brake • deactivate digital input • automatically after P175 time has expired
bF	Drive ID warning	The Drive ID (P502) stored on the EPM does not match the drive model.	• Verify motor data (P302…P306) and perform Auto Calibration. • Set drive mode (P300) to 0 or 1 • Reset the drive (P199 to 3 or 4) and reprogram.
CAL	Motor Auto-calibration active	Refer to P300, P399	Motor Auto-calibration is being performed
cE	An EPM that contains valid data from a previous software version has been installed	An attempt was made to change parameter settings	Parameter settings can only be changed after the EPM data is converted to the current version (P199 = 5)
CL	Current Limit (P171) reached	Motor overload	• Increase P171 • Verify drive/motor are proper size for application
dEC	Decel Override	The drive has stopped decelerating to avoid tripping into **HF** fault, due to excessive motor regen (2 sec max).	If drive trips into **HF** fault: • Increase P105, P126 • Install Dynamic Braking option
Err	Error	Invalid data was entered, or an invalid command was attempted	
FCL	Fast Current Limit	Overload	Verify drive/motor are proper size for application
FSt	Flying Restart Attempt after Fault	P110 = 5,6	
GE	OEM Settings Operation warning	An attempt was made to change parameter settings while the drive is operating in OEM Settings mode.	In OEM Settings mode (P199 = 1), making changes to parameters is not permitted.
GF	OEM Defaults data warning	An attempt was made to use (or reset to) the OEM default settings (P199 = 1 or 2) using an EPM without valid OEM data.	Install an EPM containing valid OEM Defaults data
LC	Fault Lockout	The drive attempted 5 restarts after a fault but all attempts were unsuccessful (P110 = 3...6)	• Drive requires manual reset • Check Fault History (P500) and correct fault condition
PdEC	PID Deceleration Status	PID setpoint has finished its ramp but the drive is still decelerating to a stop.	
PId	PID Mode Active	Drive has been put into PID Mode.	Refer to P200
SLP	Sleep Mode is active	Refer to P240...P242	
SP	Start Pending	The drive has tripped into a fault and will automatically restart (P110 = 3...6)	To disable Auto-Restart, set P110 = 0...2
SPd	PID Mode disabled.	Drive has been taken out of PID Mode. Refer to P200.	
StoP	Output frequency = 0 Hz (outputs U, V, W inhibited)	Stop has been commanded from the keypad, terminal strip, or network	Apply Start command (Start Control source depends on P100)

(1) The drive can only be restarted if the error message has been reset.

5.2 Drive Configuration Messages

When the Mode button is pressed and held, the drive's display will provide a 4-digit code that indicates how the drive is configured. If the drive is in a Stop state when this is done, the display will also indicate which control source commanded the drive to Stop (the two displays will alternate every second).

Configuration Display			
Format = x.y.zz	**x = Control Source:** L = Local Keypad t = Terminal Strip r = Remote Keypad n = Network	**y = Mode:** S = Speed mode P = PID mode t = Torque mode C = Sequencer mode	**zz = Reference:** CP = Keypad ▲ ▼ EU = 0-10 VDC (TB-5) E I = 4-20 mA (TB-25) JG = Jog nt = Network OP = MOP P 1___P7 = Preset 1...7 0 1___ 16 = Sequencer Segment
	Example: L_S_CP = Local Keypad Start control, Speed mode, Keypad speed reference t_P_EU = Terminal Strip Start control, PID mode, 0-10 VDC setpoint reference t_C_ 12 = Terminal Strip Start control, Sequencer Operation (Speed mode), Segment #12 n_t_P2 = Network Start control, Vector Torque mode, Preset Torque #2 reference n_S_03 = Network Start control, Speed mode, Speed reference from Sequencer segment #03		
Stop Source Display			
Format = x_StP	L_StP = Stop command came from Local Keypad t_StP = Stop command came from Terminal Strip r_StP = Stop command came from Remote Keypad n_StP = Stop command came from Network		

5.3 Fault Messages

The messages below show how they will appear on the display when the drive trips. When looking at the Fault History (P500), the F_ will not appear in the fault message.

Fault		Cause	Remedy [1]
F_AF	High Temperature fault	Drive is too hot inside	• Reduce drive load • Improve cooling
F_AL	Assertion Level fault	• Assertion Level switch is changed during operation • P120 is changed during operation • P100 or P121...P124 are set to a value other than 0 and P120 does not match the Assertion Level Switch.	• Make sure the Assertion Level switch and P120 are both set for the type of input devices being used, prior to setting P100 or P121...P124. Refer to 3.2.3 and P120.
F_bF	Personality fault	Drive Hardware	• Cycle Power • Power down and install EPM with valid data • Reset the drive back to defaults (P199 = 3, 4) and then re-program • If problem persists, contact factory technical support
F_CF	Control fault	An EPM has been installed that is either blank or corrupted	
F_cF	Incompatible EPM fault	An EPM has been installed that contains data from an incompatible parameter version	
F_cFt	Forced Translation fault	An EPM from an old drive put in new drive causes drive to trip F_cFT fault.	Press [M] (mode button) twice to reset

Fault		Cause	Remedy [1]
F_dbF	Dynamic Braking fault	Dynamic braking resistors are overheating	• Increase active decel time (P105, P126, P127). • Check mains voltage and P107
F_EF	External fault	• P121…P124 = 21 and that digital input has been opened. • P121…P124 = 22 and that digital input has been closed.	• Correct the external fault condition • Make sure digital input is set properly for NC or NO circuit
F_F 1	EPM fault	EPM missing or defective	Power down and replace EPM
F_F2 … F_F 12	Internal faults		Contact factory technical support
F_Fnr	Control Configuration Fault	The drive is setup for REMOTE KEYPAD control (P100=2 or 5) but is not setup to communicate with a remote keypad	Set P400 = 1, or P600 = 1
		The drive is setup for NETWORK ONLY control (P100=3) but is not setup for network communications	Set P400 or P600 to a valid network communications protocol selection
F_FoL	TB25 (4-20 mA signal) Threshold fault	4-20 mA signal (at TB-25) drops below the value set in P164.	• Check signal/signal wire • Refer to parameters P163 and P164.
F_GF	OEM Defaults data fault	Drive is powered up with P199 =1 and OEM settings in the EPM are not valid.	Install an EPM containing valid OEM Defaults data or change P199 to 0.
F_HF	High DC Bus Voltage fault	Mains voltage is too high	Check mains voltage and P107
		Decel time is too short, or too much regen from motor	Increase active decel time (P105, P126, P127) or install Dynamic Braking option
F_ IL	Digital Input Configuration fault (P121... P124)	More than one digital input set for the same function	Each setting can only be used once (except settings 0 and 3)
		Only one digital input configured for MOP function (Up, Down)	One input must be set to MOP Up, another must be set to MOP Down
		PID mode is entered with setpoint reference and feedback source set to the same analog signal	Change PID setpoint reference (P121…P124) or feedback source (P201).
		One of the digital inputs (P121…P124) is set to 10 and another is set to 11…14.	Reconfigure digital inputs
		One of the digital inputs (P121…P124) is set to 11 or 12 and another is set to 13 or 14.	
		PID enabled in Vector Torque mode (P200 = 1 or 2 and P300 = 5)	PID cannot be used in Vector Torque mode
F_nF	Remote keypad fault	Remote keypad disconnected	Check remote keypad connections
F_LF	Low DC Bus Voltage fault	Mains voltage too low	Check mains voltage
F_n Id	No Motor ID fault	An attempt was made to start the drive in Vector or Enhanced V/Hz mode prior to performing the Motor Auto-calibration	Refer to parameters P300…P399 for Drive Mode setup and calibration.
F_nEF	Module communication fault	Communication failure between drive and Network Module.	Check module connections
F_nF 1 … F_nF9	Network Faults	Refer to the module documentation. for Causes and Remedies.	

Fault		Cause	Remedy [1]
F_0F	Output fault: Transistor fault	Output short circuit	Check motor/motor cable
		Acceleration time too short	Increase P104, P125
		Severe motor overload, due to: • Mechanical problem • Drive/motor too small for application	• Check machine / system • Verify drive/motor are proper size for application
		Boost values too high	Decrease P168, P169
		Excessive capacitive charging current of the motor cable	• Use shorter motor cables with lower charging current • Use low capacitance motor cables • Install reactor between motor and drive.
		Failed output transistor	Contact factory technical support
F_0F1	Output fault: Ground fault	Grounded motor phase	Check motor and motor cable
		Excessive capacitive charging current of the motor cable	Use shorter motor cables with lower charging current
F_PF	Motor Overload fault	Excessive motor load for too long	• Verify proper setting of P108 • Verify drive and motor are proper size for application
F_rF	Flying Restart fault	Controller was unable to synchronize with the motor during restart attempt; (P110 = 5 or 6)	Check motor / load
F_SF	Single-Phase fault	A mains phase has been lost	Check mains voltage
F_UF	Start fault	Start command was present when power was applied (P110 = 0 or 2).	• Must wait at least 2 seconds after power-up to apply Start command • Consider alternate starting method (P110).
F_FAU	TB5 (0-10V signal) Threshold fault	0-10V signal (at TB5) drops below the value set in P158.	• Check signal/signal wire • Refer to parameters P157 and P158

(1) The drive can only be restarted if the error message has been reset.

Appendix A

A.1 Permissable Cable Lengths

The table herein lists the permissable cable lengths for use with an SMV inverter with an internal EMC filter.

NOTE
This table is intended as a reference guideline only; application results may vary. The values in this table are based on testing with commonly available low-capacitance shielded cable and commonly available AC induction motors. Testing is conducted at worst case speeds and loads.

Maximum Permissible Cable Lengths (Meters) for SMV Model with Internal EMC Filters									
Mains	**Model**	**4 kHz Carrier (P166 = 0)**		**6 kHz Carrier (P166 = 1)**		**8 kHz Carrier (P166 = 2)**		**10 kHz Carrier (P166 = 3)**	
		Class A	Class B	Class A	Class B	Class A	Class B	Class A	Class B
240 V, 1-phase (2/PE)	ESV251ðð2SFð	38	12	35	10	33	5	30	N/A
	ESV371ðð2SFð	38	12	35	10	33	5	30	N/A
	ESV751ðð2SFð	38	12	35	10	33	5	30	N/A
	ESV112ðð2SFð	38	12	35	10	33	5	30	N/A
	ESV152ðð2SFð	38	12	35	10	33	5	30	N/A
	ESV222ðð2SFð	38	12	35	10	33	5	30	N/A
400/480 V,3-phase (3/PE)	ESV371ðð4TFð	30	4	25	2	20	N/A	10	N/A
	ESV751ðð4TFð	30	4	25	2	20	N/A	10	N/A
	ESV112ðð4TFð	30	4	25	2	20	N/A	10	N/A
	ESV152ðð4TFð	30	4	25	2	20	N/A	10	N/A
	ESV222ðð4TFð	30	4	25	2	20	N/A	10	N/A
	ESV302ðð4TFð	30	4	25	2	20	N/A	10	N/A
	ESV402ðð4TFð	54	5	48	3	42	2	N/A	N/A
	ESV552ðð4TFð	54	5	48	3	42	2	N/A	N/A
	ESV752ðð4TFð	54	5	48	3	42	2	N/A	N/A

NOTE: The "ðð" and "ð" symbols are place holders in the Model part number that contain different information depending on the specific configuration of the model. Refer to the SMV Type Number Designation table in section 2.2 for more information.

Notes

Notes

Lenze AC Tech Corporation
630 Douglas Street • Uxbridge, MA 01569 • USA
Sales: 800 217-9100 • Service: 508 278-9100
www.lenzeamericas.com

Document: SV01

by Acme Electric
Catalog ID: T181052

Buck-Boost Transformer - Single Phase, 120 X 240 - 12/24V, 750VA

- Easily configured for numerous applications
- Lower cost solution
- 5-10 times increase in kVA

Product Details

General

Construction	Encapsulated
Max Temperature Rise	115 Degrees Celsius
Mounting Type	Wall
Primary Voltage	120 X 240 V
Product Category	Buck-Boost Transformer
Secondary Voltage	12/24 V
UL Insulation Class	180°C

UPC	047503171301
Winding Material	CU

Dimensions

Height	9.68 in
Length	4.51 in
Weight	19 lb
Width	4.75 in

Electrical Ratings

Frequency Rating	50/60 Hz
Primary Voltage	120 X 240 V
Voltage - Maximum	750 V
Voltage Rating	750.0 V

Certifications and Compliance

CSA Standard	C22.2 No 47
Nema Rating	NEMA 3R
UL Standard	UL 506

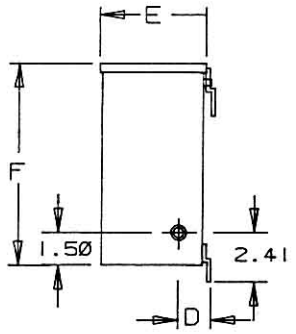

SIDE

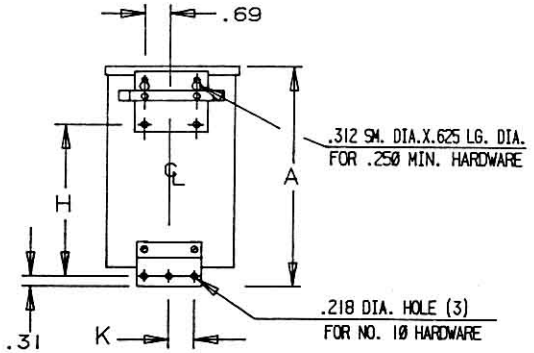

BACK (1)

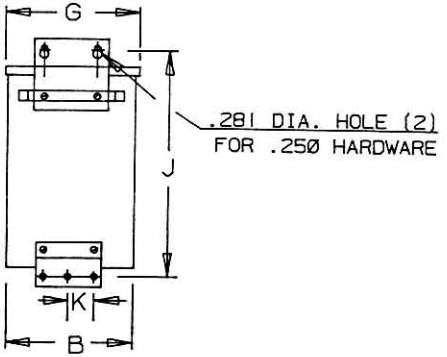

BACK (2)

115 °C RISE
SINGLE PHASE .250-2 KVA

TOTALLY ENCLOSED
ENCAPSULATED DISTRIBUTION TRANSFORMERS
FRONT ACCESS AND BUCK-BOOST & 50 HZ.

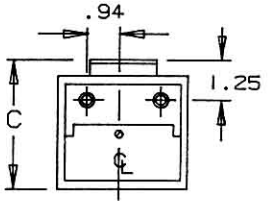

BOTTOM

NOTES:

1. TRANSFORMER SLIPS ONTO MOUNTING BRACKET (BACK(1) BACK SLIP-ON WALL MOUNTING.
2. TRANSFORMER BOLTS ONTO MOUNTING BRACKET (BACK(2). BACK RIGID WALL MOUNTING.
3. METHOD OF INSERTION OF BRACKET DETERMINES THE TYPE OF MOUNTING; SAME BRACKET FOR BOTH TYPES.
4. DOUBLE KNOCKOUTS:
   1.13 DIA. FOR .75 CONDUIT
   .88 DIA. FOR .50 CONDUIT
5. FRONT ACCESS NOT AVAILABLE ON BUCK - BOOST.

DIMENSIONS											
KVA	A	B	C	D	E	F	G	H	J	K	WT. LBS.
.250	8.20	3.90	3.88	1.30	3.67	7.36	4.08	4.70	8.68	.94	10.0
.500	8.58	4.28	4.20	1.48	3.98	7.74	4.37	5.09	9.06	.94	15.0
.750	9.20	4.66	4.51	1.67	4.30	8.36	4.75	5.71	9.68	.94	19.0
1.000	10.02	5.40	5.13	1.67	4.92	9.18	5.50	6.53	10.50	1.50	24.0
1.500	11.14	5.40	5.13	1.67	4.92	10.30	5.50	7.65	11.62	1.50	30.0
2.000	12.52	5.40	5.13	1.67	4.92	11.68	5.50	9.03	13.00	1.50	38.0

REVISIONS
H/ECN 11302

Acme Electric Corp.
LUMBERTON, N.C.

OUTLINE

TYPE NO.
DRAWN SJ HUNT 1/11/90 DATE
DESIGN
CHK. SJH APP. JLH
MAT'L
FINISH
SCALE NONE SHEET 1 OF 1
UNLESS OTHERWISE SPECIFIED
DIMENSIONS ARE IN INCHES
TOLERANCE ON:
2 PLACE DECIMALS ± .02
3 PLACE DECIMALS ± .005
DO NOT SCALE DRAWING
CADD DWG. 70007001

7/9/6	790-D-	QC-2-	I E			PRINTS TO	CONTROL 7	SIZE B- 700070-01

A) Transformadores ventilados de tipo seco

El montaje correcto del conector (terminal de asa) al terminal del transformador es sumamente importante. Asegúrese de que el conector sea del tamaño apropiado para el cable y del tipo correcto para unir los metales que componen el cable y el terminal. Mantenga la separación y el aislamiento que se establecen en las Normas para Instalaciones Eléctricas (NEC®).

INSTRUCCIONES PARA CONEXIÓN DE BARRAS DE DISTRIBUCIÓN DE ALUMINIO

Cuando se realicen conexiones a los transformadores con TERMINALES DE BARRAS DE DISTRIBUCIÓN DE ALUMINIO, deben seguirse los pasos descritos a continuación:

1) Remueva el óxido que se forma en el área de unión del terminal de distribución del transformador. Esto puede hacerse con un cepillo de alambre o tela de esmeril. Pueden utilizarse otras herramientas, teniendo cuidado de no causar ralladuras o arañazos profundos en el terminal.

2) Cubra el área del terminal con compuesto para uniones según las instrucciones del fabricante.

3) Haga las conexiones empleando uno de los métodos de atornillado mostrados.

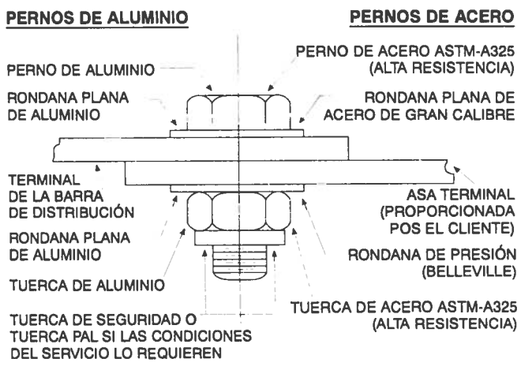

PRECAUCIÓN: Observe las recomendaciones del fabricante en cuanto al par de apriete máximo de los pernos de aluminio para evitar que se partan.

* Coloque la copa en la rondana hacia la barra de distribución. Comprima la rondana hasta que quede aplanada a fin de proporcionar el par de apriete adecuado.

B) Transformadores encapsulados de tipo seco

Es muy importante realizar el montaje adecuado del cableado exterior a la linea del transformador. Asegurese de que el conector o el terminal tenga el tamano adecuado para el cable. Separe y aisle los conectores o terminales de acuerdo a las normas para instalaciones eléctricas (NEC®). Los transformadores marcados con CE deben instalarse de acuerdo con EN 60742.

5. PUESTA A TIERRA

Todos los transforadores de tipo seco tienen un terminal de tierra en la caja. La cubierta del transformador debe conectarse firmemente a tierra para proteger al personal. La capacidad de corriente del conductor de puesta a tierra suministrado por el cliente deberá satisfacer los requerimientos internacionales, nacionales y/o locales.

6. MANTENIMIENTO

Bajo condiciones y ambientes normales, los estilos encapsulados no ventilados sólo requieren que se limpie periódicamente con un paño el polvo y la suciedad acumulada sobre la superficie exterior de la caja. Pueden requerir inspecciones más frecuentes cuando estén sometidos a condiciones adversas.

Las unidades ventiladas deben inspeccionarse a intervalos de 1 a 3 meses después de la instalación inicial. Los ductos de aire deberán mantenerse siempre limpios. Puede utilizarse una aspiradora o una fuente de aire comprimido seco de baja presión para eliminar el polvo y la suciedad. La implantación de un programa de limpieza y mantenimiento contribuirá a asegurar la seguridad y una mayor vida útil del transformador.

Si un transformador de tipo seco se moja accidentalmente, será necesario limpiarlo y secarlo a fondo antes de conectarlo a la alimentación. De lo contrario, podría fallar e interrumpirse completamente el servicio.

PRECAUCIÓN: Nunca realice mantenimiento interno cuando la unidad está conectada a la alimentación.

7. ALMACENAMIENTO

Tanto los transformadores ventilados como los encapsulados deben almacenarse en un área limpia y seca. Deberá evitarse la entrada de humedad o la condensación en el interior del transformador y cubrirse las aberturas de ventilación en unidades ventiladas. Si se almacenan a la intemperie, los transformadores deberán cubrirse y protegerse del agua, polvo y demás agentes contaminantes en el aire.

8. GARANTÍA LIMITADA DEL PRODUCTO

Todos los transformadores de tipo seco están garantizados contra defectos de los materiales y de mano de obra. La presente es una garantía limitada, la cual incluye ciertas restricciones. Póngase en contacto con el fabricante para más detalles sobre los reclamos de garantía.

AVISO: Estas instrucciones son de carácter general y es posible que no contemplen todas las variaciones en el diseño de los transformadores o en las condiciones de instalación, operación y mantenimiento de los mismos. Este transformador puede venir acompañado de instrucciones adicionales. Si necesita más información o si surge un problema, póngase en contacto con el fabricante.

Nº DE PIEZA: A-701953-A

INSTALLATION, OPERATION AND MAINTENANCE OF GENERAL PURPOSE DRY TYPE TRANSFORMERS

600 VOLTS AND BELOW

1. GENERAL

The installation, operation and maintenance of dry type transformers should be performed by an electrician or other qualified personnel who are familiar with international, national, and/or local electrical codes and with the potential shock hazards associated with electrical equipment.

These instructions cover two types of enclosure construction: ventilated and encapsulated.

A) Ventilated units are NEMA type 2 enclosures suitable for indoor use. They are UL-3R listed and CSA certified for outdoor use with the addition of an optional weather shield kit. The proper weather shield part number is listed on the nameplate.

B) Encapsulated units are NEMA 3R enclosures suitable for either indoor use in harsh environments or for outdoor use. CE marked units have a protection index of IP23.

This transformer is ready for installation and operation. It must be installed per the National Electrical Code® and local code requirements. It is recommended that these instructions be read carefully prior to installation and kept for future reference.

CE marked transformers must be installed per EN 60742.

2. INSPECTION AND HANDLING

The transformer should be inspected carefully upon receipt to check for any visible or concealed damage that may have occurred during shipment. If damage is found, a claim should be filed immediately with the carrier.

Single and three phase transformers, in smaller KVA sizes, are provided with lifting ears. Larger KVA sizes are palletized and can be lifted with appropriately sized fork lifts or hoisted by the lifting lug bolts provided on the core frame after removal of the top cover. Incorrect handling can bend the enclosure or cause other damage or result in personal injury.

3. INSTALLATION

⚠ DANGER

Hazardous Voltage. Will cause severe personal injury or death.

Turn power off supplying device before installing.

WARNING: There is a potential danger of electrical shock when working on electrical equipment! Make sure power is off before installation. Replace all covers before energizing transformer.

A) Ventilated Dry Type Transformers

Ventilated units can be installed indoors or outdoors. Outdoor installation requires the addition of a weather shield to be UL-3R listed. For outdoor installation, check electrical codes for the proper protection of transformer against adverse weather conditions.

Ventilated units should be installed in a upright position on walls (optional wall mounting brackets are available for certain KVA sizes), beams, platforms, floors or other structures capable of supporting their weight.

The ambient air should be dry and free from dust, dirt, corrosive fumes, heat or other adverse conditions. The unit should be installed a minimum of 6" from the wall or other obstructions that might prevent proper air flow through the vents.

Ventilated transformers are designed for operation in an average ambient temperature of 30 degrees C (86° F) and a maximum of 40 degrees C (104° F) not to be exceeded.

Large KVA sizes contain "shipping bolts" to prevent damage during shipping. These should be removed just prior to installation of the unit.

B) Encapsulated Dry Type Transformers

Encapsulated units can be installed indoors or outdoors. When installed outdoors, these units should be installed with the wiring compartment down to prevent the entrance of moisture. Some encapsulated units have a top entry wiring compartment and can be installed vertically (wiring compartment up).

For indoor floor mounting of an encapsulated unit that has a bottom entry wiring compartment, the unit can be installed horizontally (on its back side) for ease of making wire connections.

4. ELECTRICAL CONNECTIONS

WARNING: Danger of electrical shock! Do not remove parts or make connections while the transformer is energized.

Refer to the transformer nameplate label or enclosed wiring diagram for primary and secondary voltage combinations, frequency and number of phases. Tap connections and voltage combinations are also listed on the diagram or nameplate.

CAUTION: Do not make connections other than those shown. The transformer must be as large (KVA) as the load it must operate. Never exceed the nameplate rating as this could result in overheating, reduced life expectancy, or in worst cases, fire.

PART NO. A-701953-A

A) Ventilated Dry Type Transformers

Proper assembly of the connector (lug) to the transformer terminal is extremely important. Make certain that the connector is sized for the cable and is of the correct type to match cable and terminal metals. Always follow recommendations of the connector (lug) manufacturer. Space and insulate connectors per the NEC®.

INSTRUCTIONS FOR ALUMINUM BUS BAR CONNECTIONS

The following steps should be followed when making connections to transformers with ALUMINUM BUS BAR TERMINALS.

1) Remove oxide form joint area of transformer bus terminal. This may be done with a wire brush or emery cloth. Other tools may be used but care should be taken to avoid scratching or gouging terminal.

2) Coat terminal area with joint compound, following manufacturer s instructions.

3) Make connections using one of the bolting methods shown.

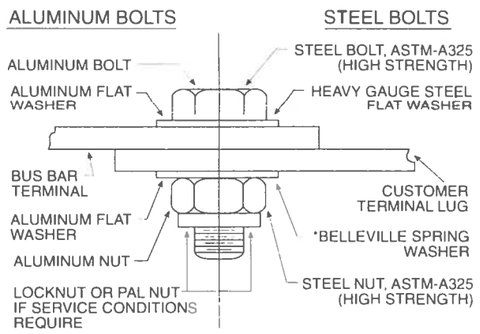

CAUTION: Care should be taken to avoid shearing aluminum bolts. Follow manufacturer s maximum torque rating.

* Place cup in washer toward bus bar. Draw washer to flat position for proper torque.

B) Encapsulated Dry Type Transformers

Proper assembly of the field wiring to the transformer leads is extremely important. Make certain that the connector or terminal is sized for the cable. Space and insulate connectors or terminals per the NEC®.

CE marked transformers must be connected per EN 60742.

5. GROUNDING

All dry type transformers have a ground stud in the enclosure. The transformer enclosure should be solidly grounded to protect personnel. The customer supplied grounding conductor should have a current-carrying capacity to meet international, national, and/or local requirements.

6. MAINTENANCE

Non-ventilated encapsulated styles only require periodic wiping of dust and dirt from the outside of the case under normal conditions and environments. Adverse conditions may require more frequent inspections.

Ventilated units should be inspected within one to three months after initial installation. Air ducts should be kept clear at all times. Vacuum cleaners or low pressure compressed dry air can be used to remove dirt or dust. A regular inspection schedule for cleaning and maintenance will help ensure added safety and longer transformer life.

If a dry type transformer accidentally gets wet, it must be cleaned and thoroughly dried before energizing. Otherwise, complete failure could result!

CAUTION: Never perform internal maintenance while the unit is energized!

7. STORAGE

Both ventilated and encapsulated transformers should be stored in a clean, dry area. Care should be taken to prevent moisture or condensation from entering the transformer, and vent openings should be covered on ventilated units. If stored outside, the transformer must be covered and protected from water, dust and other airborne contaminants.

8. LIMITED PRODUCT WARRANTY

All dry type transformers are warranted against defects in materials and workmanship. This is a limited product warranty and certain conditions apply. Please contact the manufacturer for further information on warranty claims.

NOTICE: These instructions are general in nature and may not cover all variations in transformer design or conditions of installation, operation and maintenance in enough detail to meet customer needs. Additional instructions may be included with this transformer. If you need further information or should a problem arise, please contact the manufacturer.

INSTALACIÓN, OPERACIÓN Y MANTENIMIENTO DE TRANSFORMADORES DE TIPO SECO PARA USO EN GENERAL

HASTA 600 VOLTIOS

1. INFORMACIÓN GENERAL

La instalación, operación y mantenimiento do transformadores de tipo seco deberá ser realizada por un electricista o individuo cualificado que esté familiarizado con las normas relatives a las instalaciones eléctricas a nivel internacional, nacional y/o local, y con los peligros asociados con el manejo de equipos eléctricos.

Estas Instrucciones abarcan dos tipos de cajas según su construcción: ventiladas y encapsuladas.

A) Las unidades ventiladas son cajas NEMA tipo 2 adecuadas para usar en ambientes interiores. Están en la lista de UL-3R y certificadas por la CSA para uso en ambientes exteriores si se les Instala un conjunto opcional de protección contra los elementos ambientales. El número de pieza correspondiente a este conjunto opcional se indica en la placa de identificación.

B) Las unidades encapsuladas son cajas NEMA tipo 3R adecuadas para uso tanto en ambientes interiores hostiles como en ambientes exteriores. Las unidades marcadas con CE tienen un indice de protec-cion de TP23.

Este transformador está listo para instalarse y ponerse en servicio. Deberá instalarse de acuerdo con las Normas para Instalaciones Eléctricas (NEC®) y con las regulaciones locales. Recomendamos leer detenidamente estas instrucciones antes de realizar la instalación y conservarlas como referencia futura.

Los transformadores marcados con CE deben instalarse de acuerdo con EN 60742.

2. INSPECCIÓN Y MANEJO

Al recibir el transformador éste deberá inspeccionarse cuidadosamente, poniendo especial atención sobre señales de daños, tanto visibles como ocultas, que puedan haberse producido durante el transporte. De encontrarse daños, deberá presentarse inmediatamente un reclamo a la empresa transportista.

Los transformadores monofásicos y trifásicos de menor capacidad (KVA) están provistos de asas para izar. Los de mayor capacidad vienen con paletas y pueden ser izados con un montacargas de la debida potencia o levantados por los pernos de asa para izar provistos en el marco principal después de retirar la cubierta superior. El manejo indebido puede ocasionar la deformación de la caja u otros daños, e incluso causar lesiones personales.

3. INSTALACIÓN

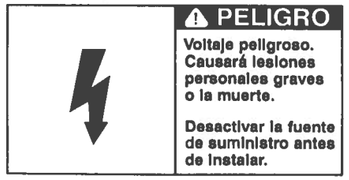

ADVERTENCIA: Al trabajar con equipos eléctricos existe el peligro de sufrir un choque eléctrico. Asegúrese de que la fuente de alimentación está desactivada antes de realizar la instalación. Coloque todas las cubiertas antes de conectar la alimentación del transformador.

A) Transformadores ventilados de tipo seco

Las unidades ventiladas pueden instalarse en ambientes interiores y exteriores. Para la instalación exterior es necesario agregar un conjunto de protección contra los elementos ambientales que estarán en la lista UL-3R. Para instalación en ambientes exteriores consulte las normas eléctricas en lo referente a la protección adecuada del transformador contra las condiciones ambientales.

Las unidades ventiladas deberán instalarse en posición vertical sobre paredes (con algunos modelos de cierta capacidad KVA se pueden emplear soportes opcionales para montaje en paredes), vigas, plataformas, pisos y demás estructuras capaces de soportar su peso.

El aire circundante debe estar seco y libre de polvo, suciedad, vapores corrosivos, calor y otras condiciones adversas. La unidad deberá instalarse a una separación de 15 cm (6 pulg.) como mínimo de la pared y de cualquier otra obstrucción que pueda bloquear el flujo de aire adecuado a través de las aberturas de ventilación.

Los transformadores ventilados están diseñados para funcionar a una temperatura ambiente promedio de 30°C (86°F) que nunca supere los 40°C (104°F).

Los transformadores de mayor capacidad (KVA) cuentan con "pernos de transporte" para evitar daños durante el transporte. Los mismos deberán quitarse inmediatamente antes de la instalación de la unidad.

B) Transformadores encapsulados de tipo seco

Las unidades encapsuladas pueden ser instaladas en ambientes interiores y exteriores. Cuando se instalen en el exterior, habrá de hacerse con el compartimiento para alambrado hacia abajo a fin de evitar la entrada de humedad. Algunas unidades encapsuladas tienen un compartimiento para alambrado accesible por la parte superior y pueden ser instaladas en posición vertical (con el compartimiento para alambrado hacia arriba).

Para el montaje sobre piso en ambientes interiores de unidades encapsuladas que tengan el compartimiento para alambrado con acceso por la parte inferior, las unidades pueden instalarse en posición horizontal (sobre la parte posterior) para facilitar las conexiones del alambrado.

4. CONEXIONES ELÉCTRICAS

ADVERTENCIA: ¡Peligro de choque eléctrico! No extraiga piezas ni realice conexiones con el transformador conectado a la fuente de alimentación.

Vea la placa de identificación del transformador o el diagrama de alambrado incluido para determinar las combinaciones posibles de voltajes primario y secundario, frecuencias y número de fases. También encontrará información sobre las conexiones de los terminales y las combinaciones de voltajes.

CUIDADO: No realice conexiones que no sean las indicadas. La capacidad del transformador (KVA) debe corresponder a la de la carga con que funcionará. Nunca exceda la capacidad indicada en la placa de identificación pues podría producirse recalentamiento del transformador, reducción de su vida útil o incluso incendio.

ENGLISH

Dry-Type Transformers 600 Volts and Below
General Installation, Operation, and Maintenance
Class 7410

Retain for future use.

SAFETY PRECAUTIONS

ENT
SET
LSP
ENT
↕
ENT (FLASH)

⚠ DANGER

HAZARD OF ELECTRIC SHOCK, EXPLOSION, OR ARC FLASH

- Apply appropriate personal protective equipment (PPE) and follow safe electrical work practices. See NFPA 70E.
- This equipment must only be installed and serviced by qualified electrical personnel.
- Turn off all power supplying this equipment before working on or inside equipment.
- Always use a properly rated voltage sensing device to confirm power is off.
- Replace all devices, doors and covers before turning on power to this equipment.

Failure to follow these instructions will result in death or serious injury.

RECEIVING, HANDLING, AND STORING

RECEIVING

Inspect new transformers when received for damage during shipment. Upon receipt, check the packing list against the equipment received to ensure the order and shipment are complete. Claims for shortages or errors must be made in writing to Schneider Electric within 60 days after delivery. Failure to give such notice will constitute unqualified acceptance and a waiver of all such claims by the purchaser.

Immediately inspect the equipment for any damage which may have occurred in transit. If damage is found or suspected, file a claim with the carrier immediately and notify Schneider Electric. Delivery of equipment to a carrier at any of the Schneider Electric/Square D® plants or other shipping points constitutes delivery to the purchaser regardless of freight payment and title. All risk of loss or damage passes to the purchaser at that time.

For details concerning claims for equipment shortages and other errors, refer to "Terms and Conditions of Sale".

ENGLISH

HANDLING

Keep all transformers in the upright position in which they were shipped. Use lifting cables or chains with spreader bars to avoid damage to the finish or parts. Whenever there are no external lifting provisions, remove the top cover. Secure cables or chains to the top core-clamping channels or angles where holes are provided for this purpose.

Lifting with hand trucks or fork lifts is permissible if the blades or forks are long enough to pass completely under the enclosure. Since most dry-type transformers have a high center of gravity and are top heavy, extreme caution should be exercised when lifting or moving units in this manner.

Rolling may be used to move a dry-type transformer if the shipping skids remain attached to the base.

For superficial or minor case part damage, spare parts may be available. Contact your local Schneider Electric/Square D distributor.

STORING

Store dry-type transformers, preferably in a warm, dry location with a uniform temperature. Cover ventilation openings to keep out dust. If it is necessary to leave a transformer outdoors, protect it completely to prevent moisture and foreign material from entering the equipment. Install space heaters or small electric heaters to prevent or greatly reduce condensation and moisture. If condensation is evident, it may be necessary to dry out the unit.

⚠ DANGER

HAZARD OF ELECTRIC SHOCK, EXPLOSION, OR ARC FLASH

- Turn off power supplying this equipment before working on it.
- Discharge all static charges held by coils.

Failure to follow these instructions will result in death or serious injury.

INSTALLATION

Keep these factors in mind when placing dry-type transformers:

- accessibility
- ventilation
- atmospheric conditions

STORED TRANSFORMERS OR TRANSFORMERS ALREADY PLACED IN SERVICE

If a transformer has been moved or stored, remove access panels or plates to inspect the equipment.

⚠ DANGER

HAZARD OF ELECTRIC SHOCK, EXPLOSION, OR ARC FLASH

Do not remove access panels or plates while the transformer is energized.

Failure to follow this instruction will result in death or serious injury.

Internally inspect the equipment for:

- damage or displacement of parts.
- loose or broken connections.
- cracked insulators.
- dirt or foreign material.
- presence of water or moisture.

Refer to “Maintenance” on page 5 for additional inspection guidelines.

© 1992–2004 Schneider Electric All Rights Reserved

LOCATION/PLACEMENT OF VENTILATED AND NON-VENTILATED TRANSFORMERS

Ventilated dry-type transformers normally are designed for installation in dry locations. They will, however, operate successfully while energized where the humidity is high. Under this condition, though, it may be necessary to take precautions to keep them dry if they are shut down for prolonged periods. Refer to "Operation" on page 5 for more detailed information.

Avoid placement of the transformer where dripping water exists. If this is not possible, provide suitable protection to prevent water from entering the transformer enclosure. Also, take precautions to guard against accidental entrance of water, such as from an open window, by a break in a water or stream line, or from use of water near the transformers.

Ventilated general purpose dry-type transformers are supplied in enclosures rated NEMA 2 for indoor installation. Weather shield kits are available to convert these enclosures for Underwriters Laboratories® (UL®) outdoor NEMA 3R use. Obtain the appropriate weather shield kit number from the transformer front panel label or from a Schneider Electric/Square D distributor or representative.

NOTE: Non-ventilated, resin-filled transformers are rated indoor/outdoor and do not require weather shield kits for outdoor use.

Adequate ventilation is essential to properly cool ventilated transformers. Clean, dry air is desirable. Filtered air may reduce maintenance if the location of the transformer presents a particular problem. Refer to National Electrical Code® (NEC®) Article 450. Forced air cooling should provide a minimum of 100 CFM per KW of losses (based on 40° C maximum ambient).

Place and install dry-type transformers in areas free from unusual dust-producing mediums or chemical fumes.

Non-ventilated transformers can be mounted directly on a wall. Consider accessibility for maintenance when placing the transformer. If the transformer will be placed near combustible materials, the minimum separations established by the NEC should be maintained.

The transformer enclosure is designed to prevent the entrance of most small animals and foreign objects.

GROUNDING

Permanently and adequately ground the enclosure and core assembly of these transformers in accordance with NEC requirements. Windings may be grounded with consideration given to local conditions in accordance with the NEC.

SEISMIC QUALIFICATIONS

Seismic qualification of nonstructural components by Schneider Electric is just one link in the total chain of responsibility required to maximize the probability that the equipment will be intact and functional after a seismic event. The equipment manufacturer determines that the equipment will be functional following a seismic event via shake-table testing programs. The seismic qualification testing results validate that Schneider Electric equipment will perform the intended function after the earthquake. However, the foundation and the anchorage system must also meet the applicable building codes and standards for the entire installation to maintain post earthquake functionality. Equipment inadequately mounted or mounted to weak or flexible foundations will not meet the requirements.

The equipment specifier/installer determines that the equipment is rigidly supported and will not leave its foundation during a seismic event. During an earthquake, the equipment must be able to transfer the loads that are created through the mounting pad and anchorage to the load-bearing path of the building structural system. If the equipment is not attached to the building structure in accordance with the minimum standards recommended

© 1992–2004 Schneider Electric All Rights Reserved

herein, the complete equipment installation might become too flexible and may overturn or shear the attachment devices and slide off its foundation.

The structural civil engineer or design engineer of record is responsible for detailing the equipment connection and anchorage requirements (including the lateral restraint system if appropriate) for the given installation. The installer and manufacturers of the anchorage and lateral restraint system are responsible for ensuring that the mounting requirements are met. Schneider Electric/Square D is not responsible for the specification and performance of these anchorage systems.

Drawings are available that include specific mounting information for seismic qualifications. Contact your local Schneider Electric/Square D representative or call 1-888-Square D (1-888-778-2733) to obtain these drawings.

SOUND CONTROL

All transformers emit sound. This is caused by the alternating voltage applied to the transformer. The resulting magnetic field causes the core steel to expand and contract, resulting in audible sound. The transformer has been designed to minimize the level of sound produced.

During manufacture, sound isolation pads are secured between the transformer mounting bracket and the enclosure using bolts and nuts (Figure 1). The mounting hardware is tightened prior to shipment to prevent damage. To reduce audible sound levels further, back off the nut 1/4-inches (5 mm) to float the transformer on the isolation pads, isolating the transformer from the enclosure.

Figure 1: Isolation Pads for "Quiet Operation"

A. Back off the nut approximately 1/4 in. (5 mm) after installation
B. Base assembly
C. Isolation pad
D. Core clamp

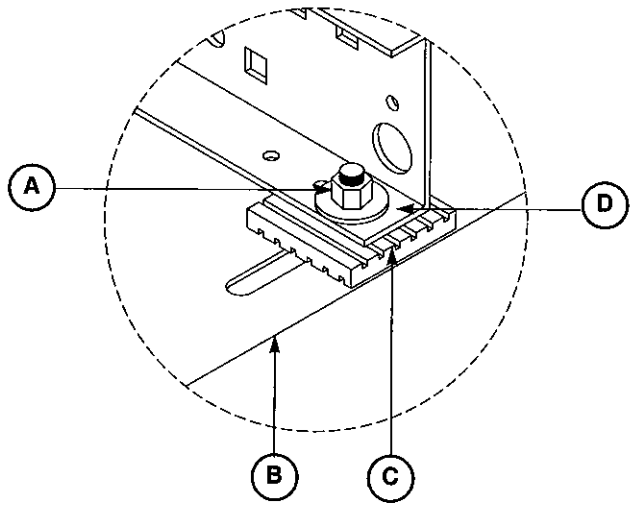

Additionally, the area where the transformer is located can affect the sound level:

- Try to avoid installing the transformer in a corner, narrow hall, or in an area with smooth surfaces. Doing so can result in the sound being reflected and amplified.
- Securely fasten all the enclosure panels. Panel looseness can result in rattling, thereby increasing the sound produced.
- Use flexible conduit, if possible.
- Ensure that the type of structure on which the transformer is mounted is strong enough to support the weight of the transformer(s).

© 1992–2004 Schneider Electric All Rights Reserved

Once installed, the sound level may exceed the NEMA tested level due to some of the points previously illustrated. The NEMA maximum allowable average of the readings in decibels is listed in Table 1:

Table 1: Sound Levels

Transformer kVA Rating	NEMA Sound Levels
0–9	40 dB
10–50	45 dB
51–150	50 dB
151–300	55 dB
301–500	60 dB
501–700	62 dB
701–1000	64 dB

OPERATION

EFFECTS OF HUMIDITY

Humidity conditions are unimportant as long as the transformer is energized. However, follow the precautionary steps listed below if the transformer is de-energized, is allowed to cool to ambient temperature, and will exceed a shutdown of 12 hours (especially in high humidity conditions).

1. Place small strip heaters in the bottom of the unit shortly after shutdown to maintain the temperature of the unit a few degrees above that of the outside air.
2. Inspect the unit for evidence of moisture before returning it to service.
3. Check the insulation resistance. If evidence of moisture exists, or if the insulation resistance is less than 1 megohm, dry out the transformer by placing it in an oven or by blowing heated air over it.

ENCLOSURE TEMPERATURE

The temperature rise on the enclosure exterior for ventilated transformers should not exceed 50° C (122° F), except as indicated in UL 1561.

MAINTENANCE

Transformers require periodic maintenance and inspections to ensure the most satisfactory service from the equipment and successful operation of it. Inspect the equipment at regular intervals, and perform corrective measures when necessary.

PERIODIC MAINTENANCE AND INSPECTION

The frequency at which transformers should be inspected depends on operating conditions. For clean, dry locations, annual inspections may be sufficient. However, for other locations, such as where the air is contaminated with dust or chemical fumes, an inspection at three- or six-month intervals may be required. Usually after the first few inspection periods, a definite schedule can be set up based on the transformer's existing conditions.

© 1992–2004 Schneider Electric All Rights Reserved

ENGLISH

⚠ DANGER

HAZARD OF ELECTRIC SHOCK, EXPLOSION, OR ARC FLASH

- Turn off power supplying this equipment before working on it.
- Discharge all static charges held by coils.

Failure to follow these instructions will result in death or serious injury.

1. De-energize the transformer, and remove the access covers. Inspect for:
   - — dirt on insulating surfaces and at areas which tend to restrict air flow.
   - — loose connections.
   - — the condition of tap changers or terminal boards.
   - — the general condition of the transformer.
2. Observe for signs of overheating and for voltage creepage over insulating surfaces, evident by tracing or carbonization.
3. Check for evidence of rusting, corrosion and deterioration of the paint. Corrective measures should be taken where necessary.

CLEANING

Remove excess dirt accumulations from the transformer windings and insulators to permit free circulation of air and to guard against the possibility of insulation breakdowns. Additionally, carefully and thoroughly clean the top and bottom ends of winding assemblies and ventilation ducts.

⚠ DANGER

HAZARD OF ELECTRIC SHOCK, EXPLOSION, OR ARC FLASH

- Turn off power supplying this equipment before working on it.
- Discharge all static charges held by coils.

Failure to follow these instructions will result in death or serious injury.

1. De-energize the transformer, and clean the windings with a vacuum cleaner, a blower, or with compressed air. Use clean, dry compressed air; apply it at relatively low pressure (not over 25 psi).

   NOTE: A vacuum cleaner is preferred as the first step in cleaning, followed by the use of compressed air.
2. Brush and wipe lead supports, tap changers and terminal boards, bushings, and other major insulating surfaces with a dry cloth.
3. Do not use liquid cleaners because some of them have a solvent or deteriorating effect on most insulating materials.

CONNECTIONS AND CONTACT SURFACES

A clean contact surface area is necessary. Therefore, terminals must be clean. If transformers are installed outdoors or in a harsh environment, seal the connections with approved electrical joint compound. Apply the compound to exposed connections and the surface area before a bolted connection is made.

© 1992–2004 Schneider Electric All Rights Reserved

ENGLISH

REPLACEMENT PARTS AND ACCESSORIES

Table 2 lists available transformer lug kits. For additional information regarding terminal connectors, refer to the label on the transformer, on the reverse side of the front panel.

Table 2: VERSAtile™ Compression Lugs and Mechanical Set-Screw Types—UL Listed Lugs AL9CU (90° C Rated)

Transformer kVA Sizes	Kit Catalog Number	Terminal Lugs		Aluminum or Copper Conductor Range (AWG or kcmil)	Hardware Included	
		Qty.	Catalog Number		Qty.	Type
VERSAtile Compression Equipment Lugs						
15–37 1/2 1Ø	VCELSK1	8	VCEL02114S1	#8–1/0	8	1/4 in. x 1 in. cap screws
15–45 3Ø		5	VCEL030516H1	#4–300 kcmil	1	1/4 in. x 2 in. cap screws
50–75 1Ø	VCELSK2	13	VCEL030516H1	#4–300 kcmil	8	1/4 in. x 1 in. cap screws
75–112 1/2 3Ø					8	1/4 in. x 2 in. cap screws
100–167 1Ø 150–300 3Ø	VCELSK3	3	VCEL030516H1	#4–300 kcmil	3	1/4 in. x 3/4 in. cap screws
		26	VCEL07512H1	#500–750 kcmil Al 500 kcmil Cu	16	3/8 in. x 2 in. cap screws
500 3Ø	VCELSK4	34	VCEL07512H1	#500–750 kcmil Al 500 kcmil Cu	21	3/8 in. x 2 in. cap screws
Mechanical Set– Screw Type Lugs						
15–37 1/2 1Ø	DASK1	8	DA2	#14–#2	9	1/4 in. x 3/4 in. cap screws
15–45 3Ø		5	DA250	#6–250 kcmil		
50–75 1Ø	DASK2	13	DA250	#6–250 kcmil	8	1/4 in. x 1 in. cap screws
75–112 1/2 3Ø					8	1/4 in. x 1 3/4 in. cap screws
100–167 1Ø	DASK3	3	DA250	#6–250 kcmil	3	1/4 in. x 1 in. cap screws
150–300 3Ø		26	DA600	#2–600 kcmil	16	3/8 in. x 2 in. cap screws
500 3Ø	DASK4	34	DA600	2–600 kcmil	21	3/8 in. x 2 in. cap screws

NOTE: Refer to UL 486A for torque values to be used with lug connection hardware.

To order replacement enclosure parts and other accessories, refer to the transformer section in the Schneider Electric *Digest*, and call 1-888-Square D (1-888-778-2733).

© 1992–2004 Schneider Electric All Rights Reserved

ENGLISH

Schneider Electric USA
6 Commercial Road
Huntington, IN 46750 USA
1-888-SquareD (1-888-778-2733)
www.us.SquareD.com

Electrical equipment should be installed, operated, serviced, and maintained only by qualified personnel. No responsibility is assumed by Schneider Electric for any consequences arising out of the use of this material.

© 1992–2004 Schneider Electric All Rights Reserved

KLR35BTB2

KLR, 480V, 35A, 3 Phase, Type 1, Input Line Inductor, UL Recognized

PRODUCT INFORMATION

SKU: KLR35BTB2. Categories: KLR, Input, Line Reactor.

SPECIFICATIONS

Rated Voltage	480
Hertz (Hz)	50/60
Horsepower (HP)	0
kVAR	0
Phase	3
Max Amps	35
Impedance Value	Ultra Low Z
Enclosure Type	Type 1
Watts Loss	55
Country of Origin	US
Dimensions	Length: 7 in Width: 10 in Height: 7.5 in
Weight	14 lbs

Contact TCI for more information or to place an order:
800-824-8282 | sales@transcoil.com | transcoil.com
W132 N10611 Grant Drive, Germantown, WI 53022

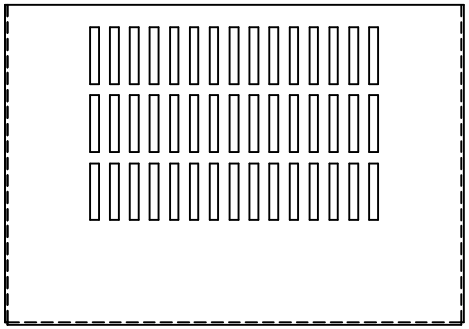

NOTES:
MATERIAL: #16GA (.059) STEEL
FINISH:
PRODUCT CODE – 312E
COLOR – PEBBLE GRAY (BEIGE)
POWDER TYPE – POLYESTER
–POLYURETHANE

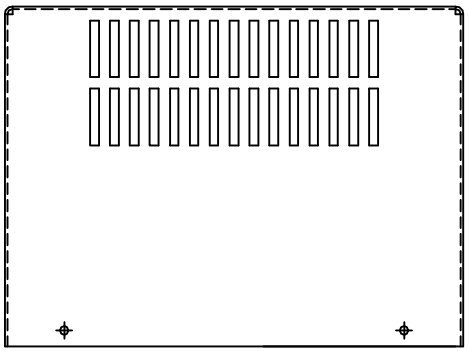

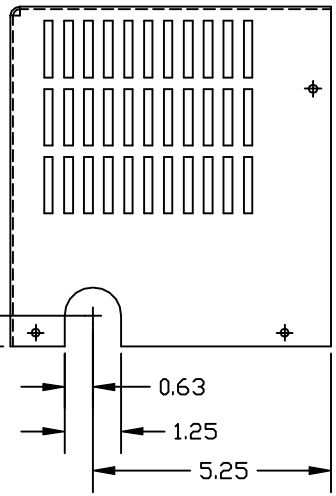

COVER
TCI P/N 17134

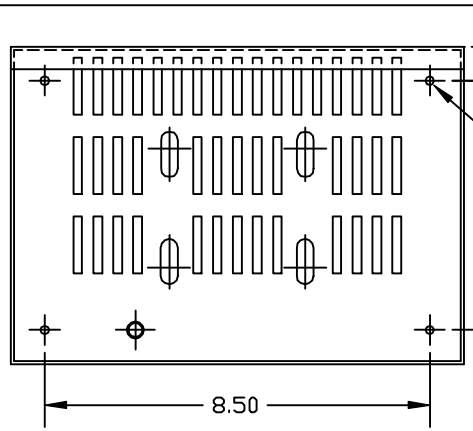

BASE
TCI P/N 17133

NOTES:
MATERIAL: #16GA (.059) STEEL
FINISH:
PRODUCT CODE – 312E
COLOR – PEBBLE GRAY (BEIGE)
POWDER TYPE – POLYESTER
–POLYURETHANE
TOTAL ENCLOSURE WEIGHT: 6 LBS.

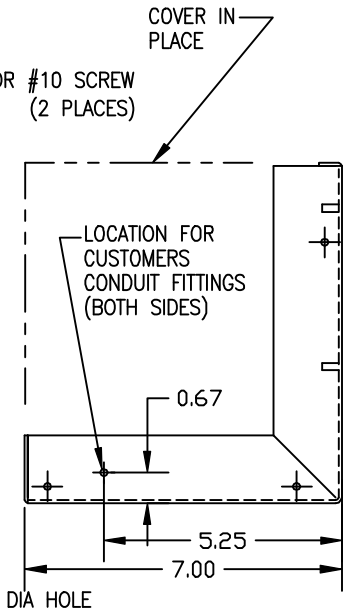

.203 DIA HOLE
(2 PLACES)MARKED "A"

NO	REVISION	DATE	BY
	REDRAWN-NO REVS	4/4/01	RJC

TOLERANCES (EXCEPT AS NOTED)
DECIMAL
.XX ±.01
.XXX±.005
FRACTIONAL
± 1/32
ANGULAR
± 1/2°

7878 N. 86th STREET
MILWAUKEE, WI 53224

KLC CABINET SIZE 2
BASE AND COVER

DRN. BY	DATE	DWG. NO.	
RJC	04-06-01	B	C2
SCALE 3/8"=1"	APRVD.		SHT. 1 OF 1

Warnings and Cautions

Warning	Dangerous Voltage Warning: warns of situations in which a high voltage can cause injury and/or equipment damage. The text next to this symbol describes ways to avoid danger.
Warning	General Warning: warns of situations that can cause physical injury and/ or equipment damage by means other than electrical. The text next to this symbol describes ways to avoid the danger.

General Safety Instructions

Warning	Be sure to read, understand, and follow all safety instructions.
Warning	Only qualified electricians should carry out all electrical installation and maintenance work on reactors.
Warning	All wiring must be in accordance with the National Electrical Code (NEC) and/or any other codes that apply to the installation site.
Warning	Disconnect all power before working on the equipment. Do not attempt any work on a powered reactor.
Warning	The reactor, VFD, motor, and other connected equipment must be properly grounded.
Warning	The VFD terminals and connected cables are at a dangerously high voltage when power is applied to the VFD, regardless of motor operation.

All electrical connections must be re-torqued annually.

OUTPUT

When installing the KLR/KDR Reactors on the OUTPUT side of the Variable Frequency Drive (VFD), please use the following guidelines:

- TCI recommends 1.5% impedance reactors to be used on the output of the VFD. In case of the KDR line, use only the KDR OUTPUT reactors

- Reactors should be mounted as close to the output terminals of the VFD as possible

- TCI suggests that the reactor be used in applications where the motor lead length is less than 100 feet. For applications with motor lead lengths greater than 100 feet, TCI offers V1k/KLC Output Filters and KMG MotorGuard High Performance Sinewave Filters.

- Reactors are sized by the Full Load Amps located on the motor nameplate.

Please contact TCI Technical Support or your TCI distributor for application information regarding the use of these reactors on the load or output side of the VFD or in applications where inductors are used.

TCI, LLC
W132 N10611 Grant Drive
Germantown, WI 53022
Ph: 800-TCI-8282
www.transcoil.com

Reactor Installation Guide

TCI, LLC
W132 N10611 Grant Drive
Germantown, WI 53022
Ph: 800-TCI-8282
www.transcoil.com

Revision 3.5 Part # 24774 July 30, 2014

KLR/KDR Line Reactor Installation Instruction

INPUT

When installing the KLR/KDR Line Reactors on the INPUT side of the Variable Frequency Drive (VFD), please use the following guidelines when wiring the unit:

- The KLR/KDR Line Reactor is a 3-phase device and should be wired in a series and positioned on the input side of the VFD.

- All Terminal Block connectors will be marked. A1, B1, and C1 are the input terminals where the 3 phases of incoming power are to be wired. As a result, A2, B2, and C2 are the output terminals. Units with copper bus or ring lug terminals are not marked. In these cases, either the upper terminals or lower terminals can be used as the input terminals as long as the selection is consistent. For example, if an upper terminal is selected as the input, all upper terminals must be input terminals. Wiring from the output terminals should connect to the input of the VFD.

- Refer to NEC wiring practices for appropriate wire sizes for your application.

- Power Wiring: Only use 75°C copper conductors unless the wire connector is marked for Al/Cu, then the use of aluminum wire is permitted.

- TCI recommends that these reactors be wired and located as close to the front end of the VFD as possible to have the greatest success in both protecting the VFD as well as mitigating line harmonics.

- In standard 40°C ambient or less installations, a clearance of 3 inches on all sides of the reactors and its enclosure is recommended for assisting in heat dissipation and ample wire bending space. This is a general guideline for typical applications. If the reactor is being installed next to a heat sensitive instrument or control device, we recommend reviewing specific requirements or heat limitations. Line reactor heat loss information is available on the web at www.transcoil.com.

- These reactors are designed to be floor-mounted or wall-mounted. Large open-style devices should be panel mounted by incorporating a bracket that would act as a shelf to support the reactor and/or enclosure. When installing an open style device in an existing control cabinet, drive cabinet, motor control center, or other large enclosure, the reactor should be mounted in the lower half of the cabinet to prevent hot spots or pockets of heat (this typically allows better thermal dissipation and heat convection). Reactors with ducts must be mounted in such a way that maximizes air flow. Reactors with ducts are designed to be mounted vertically for proper cooling.

Field Wiring Information

Below is the typical wiring diagram for the 3-phase reactor applied to the front end of the Variable Frequency Drive (VFD).

Single-phase applications are acceptable, however, it is important to size the unit based on the single phase Full Load Amperage of the VFD. The input and output connections should be on terminals A and C to ensure proper performance.

Wiring Diagram

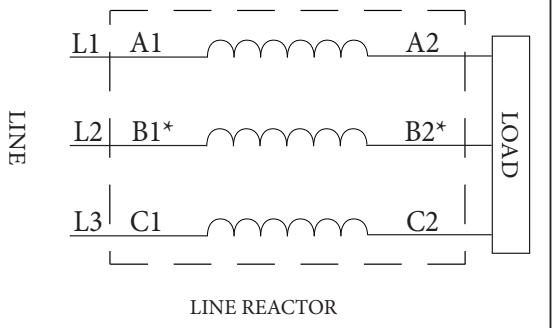

LINE REACTOR

* For single-phase applications, use coils A and C. Isolate terminals B1 and B2.

Product Specifications

- 3-Phase, 600 Volt Class
- UL Recognized; File E-116124
- CE Marked
- CSA Certified
- Current-rated device
- 200% rated current for 3 minutes
- Ambient Temperature: 40°C

PXD Pressure Transducers

Accurate and Reliable 4-20 mA Pressure Measurements

For precise measurements and rugged reliability, the PXD-261 pressure transducer offers accuracy and durability in harsh conditions. Each transducer is individually calibrated over its operating range. Fully submersible cables and a small diameter transducer make deployment easy.

Rugged

- Suitable for high-pressure environments
- Fully submersible cable and connector
- Stainless steel construction

Robust

- Electronically isolated 4-20 mA signal
- Highly accurate and stable pressure sensor
- Excellent thermal stability

Versatile

- Vented or non-vented
- Less than 1-in diameter
- Available in seven pressure ranges

Convenient

- 1/4-in NPT threads for piping installations
- Extend cable up to 4500 ft without signal loss
- No field calibration required

Applications

- ***Aquifer characterization***
- ***Marine and reservoir monitoring***
- ***Long-term monitoring***
- ***Packer installations***
- ***High-pressure piping***
- ***Industrial and municipal monitoring***
- ***Regulatory monitoring***
- ***PLC and SCADA systems***

Sensor Specifications

Operating principle	Stainless encased integrated silicon strain gauge bridge
Wetted materials	316 stainless steel, Viton®
Length	8.5 in (21.6 cm)
Diameter	0.86 in (2.2 cm)
Weight	1 lb. (0.45 kg)
Signal current	4-20 mA
Min. warm-up time	50 milliseconds
Range	15 PSI (35 ft, 11 m) 20 PSI (46 ft, 14 m) 30 PSI (69 ft, 21 m) 50 PSI (115 ft, 35 m) 100 PSI (231 ft, 70 m) 250 PSI (577 ft, 176 m)
Accuracy	±0.05% full scale @ 15°C (59°F)
Pressure rating	2X full scale
Operating temperature	5° to 30°C (41° to 86°F)
Storage temperature	-40° to 125°C (-40° to 257°F)
Cable	Quick-Connect or stripped and tinned

CE FC

In-Situ Inc. 100% Wind Powered

CALL TO PURCHASE

In-Situ Inc.
221 East Lincoln Avenue ▪ Fort Collins, CO 80524 USA
Telephone: 970-498-1500 ▪ Fax: 970-498-1598

1-970-498-1500 ▪ *1-800-446-7488*
(international and domestic calls) (toll-free in US and Canada)

WWW.IN-SITU.COM

This information is subject to change without notice. Copyright © 2008 In-Situ Inc. All rights reserved. In-Situ, RDO, TROLL, and Win-Situ are trademarks or registered trademarks of In-Situ Inc. Viton is a registered trademark of E.I. du Pont de Nemours and Company, USA and other countries.

12/2008

In-Situ Inc.®

Instruction Sheet

Pressure Transducers: PXD-261 & PXD-461

In-Situ's PXD-261 and PXD-461 are fully submersible pressure transducers for monitoring pressure or water level. They can be used with In-Situ's HERMIT® data loggers to collect fast, accurate time-drawdown data from pump and slug tests. Small diameter permits access to 1" wells. Removable nosecone and NPT threading allows use in piping or conduit. Quick-Connect cable is easy to install, and long cable lengths do not compromise accuracy.

Your transducer was carefully inspected before shipping and is ready to operate out of the box. Check for any physical damage during shipment. Notify In-Situ and file a claim with the carrier if there is any such damage. If your transducer didn't come as ordered, please contact In-Situ immediately.

Operating Principle

A pressure transducer senses changes in pressure, measured in pounds per square inch (PSI), exerted by a column of water or other fluid above an internal strain gauge. This is translated electronically to a 4-20 mA signal sent to a data logger. Software calibration coefficients unique to each transducer enable the logger to convert the 4-20 mA output to meaningful results in the desired units.

PSIA and PSIG

PSIA stands for "pounds per square inch absolute," measured with respect to zero pressure. PSIA transducers measure all pressure forces detected by the strain gauge, including atmospheric pressure.

PSIG stands for "pounds per square inch gauge," measured with respect to atmospheric pressure. PSIG transducers thus exclude the atmospheric pressure component.

This difference may be represented by a simple equation:

$$P_{gauge} = P_{abs} - P_{atmos}$$

Calibration Documentation

Documents provided with the transducer describe In-Situ's calibration process and list the transducer's calibration coefficients (Linearity, Scale, and Offset), which are also printed on the backshell dust cap.

The only removable parts of the transducer are the nose cone and cable. Do not take the body apart, as this may severely damage the transducer and will void the warranty.

Installation

Installation requires four steps, which may be performed in any convenient order:

- Attach the cable
- Connect the cable to the data logger
- Install the transducer in the water
- Program the data logger to identify the transducer

Attach the Cable

1. Remove the protective caps from the backshell and the Quick-Connect connector on the cable.

   Don't discard the caps. Set them aside for later use to protect the contacts when the probe and cable are not in use, and for convenient reference to the coefficients.

2. Slide back the sleeve of the Quick-Connect connector.
3. Align the tab in the transducer backshell with the slot inside the cable connector.
4. Slide the two parts together and press tightly. They should slip together easily, without forcing.
5. Tighten the locking sleeve hand-tight.

PXD Pressure Transducers (PXD-461 shown)

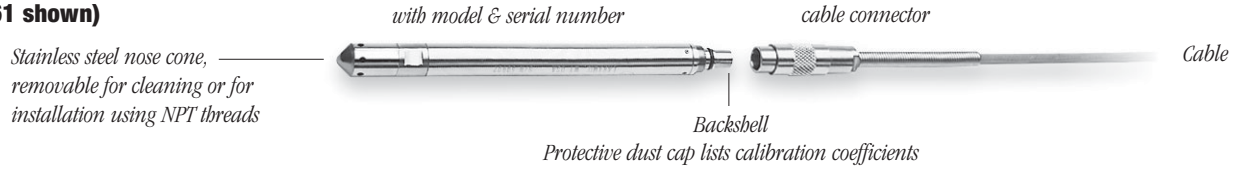

Connect to the Data Logger

To connect to In-Situ's HERMIT data loggers:

Proper operation of a transducer depends upon a clean, dry connection. Be sure the connectors are clean and dry before installing them.

1. Remove the protective caps from the logger and cable connectors.
2. Orient the connector patterns so that the large tab in the cable connector aligns with the V-shaped notch in the data logger connector.

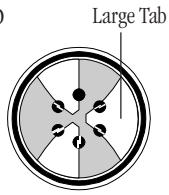

3. Gently press the connector halves together. Excessive force should not be required.
4. Tighten the connector's lock ring to establish a tight connection and water-resistant seal.

Program the Data Logger

The process of collecting data from the PXD series transducers and In-Situ's HERMIT data loggers is referred to as "running a test." This has three steps:

- Enter the transducer characteristics into the data logger
- Enter the test conditions into the data logger
- When the logger is programmed and the transducer is in place, the test can be started

How you carry out these steps depends on the model of data logger you are using. For specific information, please refer to the data logger Operator's Manual.

Installation Guidelines

- For best results, install the transducer about an hour prior to test setup or data collection. This will insure that the transducer is stabilized to the water temperature and allow time for the cable to stretch or relax.
- To conserve battery power, don't put the transducer any deeper than necessary for the test.

The pressure reading is calculated by In-Situ's HERMIT data loggers using the quadratic formula

$$P = LX^2 + SX + O$$

where	P	=	Pressure in PSI
	X	=	Normalized* transducer value (0-1)
	L	=	Linearity value from probe data tag
	S	=	Scale value from probe data tag
	O	=	Offset value from probe data tag

**Transducer reading (in milliAmps) minus 4 divided by 16*

- The transducer will not read past its designated range. If the range is exceeded, the displayed value will remain constant.

Do not submerge the PXD-261 more than two times its range. Do not submerge the PXD-461 more than 1.5 times its range. Overpressuring will permanently offset, damage, or destroy the transducer.

- To verify operation, raise and lower the transducer and check that readings are reasonable and showing change before collecting data.
- Be sure that the transducer is attached securely to the wellhead or other stationary object and will not slip during operation.
- Don't set a pressure transducer below the level of the pump in a pumping well. The pressure transients generated by the pump will cause false level readings. Large pumps can swallow the transducer and cause permanent damage to both the transducer and the pump.
- Keep the vent tube in the cable unobstructed. Avoid kinks in the cable. Minimum recommended bend radius is one inch.

Piping Installations

With the nosecone removed, the transducer can be installed in any ¼" NPT threaded pipe to monitor flow. Always remove the cable before screwing the transducer body into the NPT.

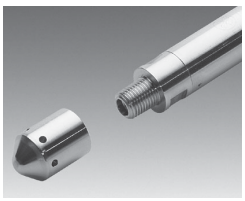

To install the transducer in a pipe fitting:

1. If the cable is attached, remove it. To do so, unscrew the locking sleeve and gently pull the transducer and cable connector apart.
2. Unscrew the nosecone by hand and remove it.
3. Using an open end wrench (7/8" for PXD-261, 5/8" for PXD-461) and the wrench flats on the transducer body, screw the transducer onto any ¼" NPT threaded nipple, tee, or elbow.

Apply your wrench to the wrench flats, not to the spanner holes at the back end of the transducer. Thread sealing compound or tape may be used if necessary.

4. Reattach the cable.

Accuracy of the electronics may be affected by temperature fluctuations. For long-term tests (several weeks), we recommend you insulate the transducer to ensure a thermally stable environment.

When replacing the nose cone, first position the o-ring (PXD-461) or wavy spring washer (PXD-261), if removed, then screw on the nose cone hand-tight.

Using the Transducer with Other Equipment

The transducer provides a current output that is proportional to the applied pressure. This output is a 4-20 mA change corresponding to a full-scale change in pressure. The voltage required by the transducer is 11.6–40 (maximum) VDC.

Any data logger that provides the necessary voltage and can read the 4-20 mA current output can be used with the transducer. To insure accuracy, power should be applied for a minimum of 50 milliseconds prior to any reading.

Transducer wiring is shown in the table below by cable type.

In-Situ Inc. does not warrant the transducer against damage caused by use with devices not provided by In-Situ.

Mating connectors must be ordered separately from In-Situ, Inc. A kit with wiring diagrams is available. *Do not use any other type of connector* as this will compromise the integrity of waterproof operation. Also, remember that the vent tube in the cable must remain unobstructed to assure that the transducer is insensitive to barometric pressure changes.

Maintenance

Filter

A small mesh filter protects the pressure sensor from dirt and other foreign objects. It is held in the end of the NPT threads by a small star washer and can be seen when the nosecone is removed. The filter appears opaque when clean. If it becomes clogged with silt, try flushing it gently with a couple of squeezes from a water bottle. If this doesn't do the trick, contact Customer Service.

Nose Cone

If the holes in the nose cone become plugged, take the nose cone off and clean the holes with a swab or brush. To replace the nose cone on the PXD-261, first put the wavy spring washer over the threads, then screw on the nose cone hand-tight.

Cable

The transducer's Quick-Connect cable connector permits easy cable removal when changing to a different cable, installing the transducer in a pipe fitting, or storing the probe. Cable is available in standard and custom lengths of vented polyurethane or FEP*, or non-vented HDPE.

Take care to protect the cable from the sharp edges of well casings.

All cables are internally sealed to protect the transducer in the event that the cable is cut. Don't attempt to repair, splice, or seal any cuts without first consulting In-Situ Technical Support personnel.

Vent Tube (Vented Cable)

PSIG pressure sensors are designed to be insensitive to barometric pressure changes. A vent tube in the cable assures that atmospheric pressure is the reference pressure to the sensor diaphragm. *For proper operation the vent tube should not be bent, kinked, or blocked.* Such obstructions will cause barometric pressure fluctuations to appear in measurements, and may also introduce large, varying errors due to thermal expansion and contraction of air within the vent tube and probe body.

Calibration

Accuracy can be adversely affected by improper care and handling, exceeding operating pressure and temperature limits, physical damage or abuse. Annual recalibration is recommended.

Contact In-Situ Customer Service for information on recalibration.

Warranty Provisions

In-Situ Inc. warrants the PXD-261 and PXD-461 for one year from date of purchase by the end user against defects in materials and workmanship under normal operating conditions. To exercise this warranty contact Technical Support at the phone or e-mail address below for a return material authorization (RMA) and instructions. Complete warranty provisions are posted on our website at www.In-Situ.com.

Cable	Source (+)	Return (–)	Ground	Source Double Connector (+)	Return Double Connector (–)
4-conductor Non-vented	Yellow (Pin 6)	Brown (Pin 5)	Shield (Pin 4)	Yellow & Orange	Brown & Red
6-conductor Poly Vented (RuggedCable™)	Brown (Pin 6)	Black (Pin 5)	Shield (Pin 4)	Black & White	Brown & Red
6-conductor FEP Vented (RuggedCable™)	Yellow (Pin 6)	Black (Pin 5)	Shield (Pin 4)	Yellow & Orange	Black & Brown

How to Contact Us

Technical Support: 800 446 7488
Toll-free 24 hours a day in the U.S. and Canada
Address: In-Situ Inc.
221 East Lincoln Ave.
Fort Collins, CO 80524 USA
Phone: 970 498 1500
Fax: 970 498 1598
Internet: www.in-situ.com
e-mail: support@in-situ.com

To Obtain Repair Service (U.S.)

If you suspect the transducer is malfunctioning and repair is required, you can help assure efficient servicing as follows:

1. Call or e-mail In-Situ Technical Support (support@in-situ.com). Have the product model and serial number handy.
2. Be prepared to describe the problem, including how the instrument was being used and the conditions noted at the time of the malfunction.
3. If Tech Support determines that service is needed, they will ask that your company pre-approve a specified dollar amount for repair charges. When the pre-approval is received, Tech Support will assign an RMA (Return Material Authorization) number.
4. Clean the probe and cable. Decontaminate thoroughly if it has been used in a toxic or hazardous environment.
5. Pack the transducer in its original shipping box, if possible.
6. Mark the RMA number clearly on the outside of the box.
7. Send the package, shipping prepaid, to
   In-Situ, Inc.
   ATTN: Repairs
   221 East Lincoln Ave.
   Fort Collins, CO 80524

The warranty does not cover damage during transit. In-Situ recommends the customer insure all shipments. Warranty repairs will be shipped back prepaid.

Outside the U.S.

Contact your international In-Situ distributor for repair and service information.

Specifications

Wetted materials	316 Stainless steel, Viton®
Transduction principle	Integrated silicon strain gauge bridge
Voltage input	11.6 – 40 (absolute maximum) VDC
Signal current	4 – 20 mA (typical throughout pressure range)
Operating temperature	5º to 30ºC (41º to 86ºF)
Storage temperature	-40º to 125ºC (-40º to 257ºF)
Min. warmup time	50 milliseconds

PXD-261

Dimensions	0.86” dia., 8.5” long (2.2 x 21.6 cm)	
Weight	1 lb. (0.45 kg)	
Accuracy	±0.05% of full scale at 15ºC (59ºF)	
Ranges	Pressure	Max. Usable Depth
	15 PSIG/PSIA	35 ft /11 m water
	20 PSIG/PSIA	46 ft /14 m water
	30 PSIG/PSIA	69 ft /21 m water
	50 PSIG/PSIA	115 ft /35 m water
	100 PSIG/PSIA	231 ft /70 m water
	250 PSIG	577 ft /176 m water
Overpressure tolerance	2X full range	

PXD-461

Dimensions	0.7” diameter, 8.5” long (1.78 x 21.6 cm)	
Weight	0.5 lb (0.22 kg)	
Accuracy	±0.04% of full scale at 15ºC (59ºF)	
Ranges	Pressure	Max. Usable Depth
	500 PSIA	1153 ft / 352 m water
	1000 PSIA	2307 ft / 703 m water
Overpressure tolerance	1.5X full range	

Cable

Wetted materials	316 Stainless steel, Viton®
	Vented: FEP* or polyurethane
	Non-vented: high-density polyethylene (HDPE)
Size	0.25” (6.7 mm) OD nominal
Max. length	4500 ft (1372 m)
Reels	Plastic: up to 350 ft (106 m) capacity
	Small Steel: up to 450 ft (137 m) capacity
	Large Steel: up to 1500 ft (457 m) capacity

*** FEP = fluorinated ethylene propylene, the generic equivalent of DuPont Teflon®.*

1 800 446 7488
(toll-free, US and Canada) or 970 498 1500 **www.in-situ.com**

In-Situ Inc.®

Due to continuing product development this information is subject to change without notice. In-Situ, HERMIT, RuggedCable, and the In-Situ logo are trademarks or registered trademarks of In-Situ Inc. Teflon and Delrin are registered trademarks of E. I. DuPont de Nemours and Company. Viton is a registered trademark of DuPont Dow Elastomers. Other trademarks are the property of their respective owners. Copyright © 1996 – 2007 by In-Situ Inc. All rights reserved.

0010000 rev. 004 06/07

Echotouch™ Ultrasonic Level Transmitter

Description

Offered in CSA and Cenelec approved intrinsically safe or general purpose configurations, the two-wire ultrasonic transmitter provides non-contact level measurement up to 18' or 5.4m, and is ideally suited for challenging corrosive, slurry or waste liquids. The transmitter is typically selected for atmospheric bulk storage, day tank and waste sump applications located within a classified hazardous area. Media examples include diesel fuel and hydrochloric acid. The transmitter is calibrated in less than a minute using the LCD display, 4-button interface and intuitive calibration menu. All user set points are held in non-volatile memory. In the event of acoustic signal loss, the transmitter will hold the current output at the user designated safe state.

Features

- LCD digital display indicates level in inches or centimeters
- PP enclosure rated NEMA 4X with rugged Kynar® transducer
- EasyCal simple push button calibration for all user set points
- Adjustable dead band and range filters eliminate false echo returns

Specifications

Range:	0.5' to 18' (15 cm to 5.4m)
Accuracy:	± 0.25% of span in air
Resolution:	0.125" (3 mm)
Beam width:	8˚ conical
Dead band:	0.5' (15 cm)
Display type:	LCD, 4-digit
Display units:	Inch or cm
Memory:	Non-volatile
Supply voltage:	12-32 VDC
Loop resist.:	600 Ohms @ 24 VDC
Signal output:	4-20 mA, two-wire
Signal invert:	4-20 or 20-4 mA
Calibration:	Digital, push button
Fail-safety:	Reverts to safe state during echo-loss
Process temp.:	F: -40˚ to 140˚ C: -40˚ to 60˚
Temp. comp.:	Automatic
Electronics temp.:	F: -4˚ to 140˚ C: -20˚ to 60˚

Pressure:	30 psi (2 bar) @ 25˚ C., derated @ 1.667 psi (.113 bar) per ˚C. above 25˚ C.
Enclosure rating:	NEMA 4X (IP65)
Installed height:	5.1" (13 cm) above tank process mount
Encl. material:	PP, UL94VO
Trans. material:	PVDF Kynar®
Process mount:	2" NPT (2" G)
Mount. gasket:	Viton® (G version only)
Conduit entrance:	Single, 1/2" NPT
Classification:	Intrinsically safe
Approvals:	CSA: Class I, Groups A, B, C & D; Class II, Groups E, F and G; Class III; T3C
Parameters:	CSA: Vmax < 32.0 V; Imax < 130 mA; Ca = 0 µF; La = 0 µH
Certificates:	CSA: LR 79326
CE compliance:	EN 50082-2 immunity EN 55011 emission

Echotouch Ordering

LU20-50 ☐ 1-IS

Process mount (1) (2) (3)
- **0** 2" NPT (US)
- **6** 2" G (Metric)

LM50 Shown

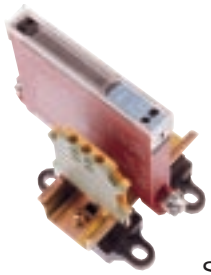

LB10 Shown

Ordering Notes

1) The straight G thread version seals with an included Viton® mounting gasket.
2) For installation on open tanks, order the LM50-1001 (2" NPT) or LM50-1061 (2" G) side mount bracket. Locate the bracket far enough inboard from the side wall to avoid sensor beam width conflicts.
3) To order the general purpose transmitter, do not specify the last two digits (ie: LU20-5001).
4) To complete your IS transmitter, add the LB10-1001 intrinsic safety barrier.

NRTL/C

Echotouch™ Ultrasonic Level Transmitter

Dimensions

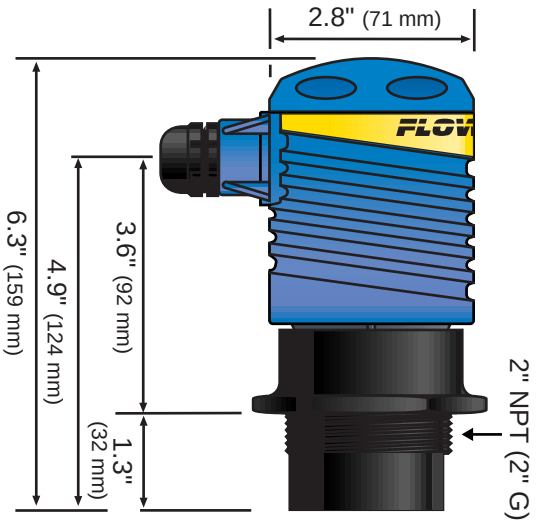

Specifications are subject to change without notice.

Beam Cone Data

Depth (Feet)	Radius (Inches)	Radius (cm)
1	1.2	3.1
3	2.9	7.3
5	4.6	11.6
7	6.2	15.9
9	7.9	20.1
11	9.6	24.4
13	11.3	28.7
15	13.0	32.9
17	14.6	37.2
19	16.3	41.3

To LC52 Relay Controller

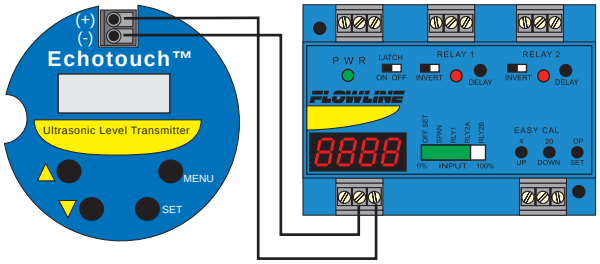

To Loop Powered Indicator

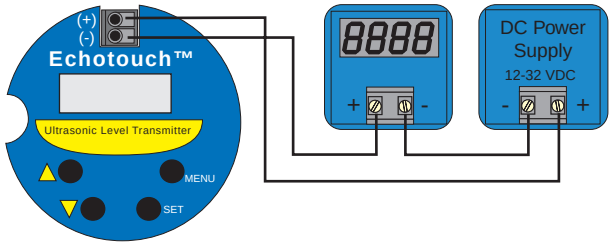

To PLC

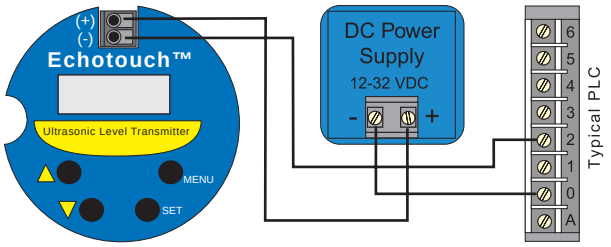

To LI1_ Universal Panel Meter

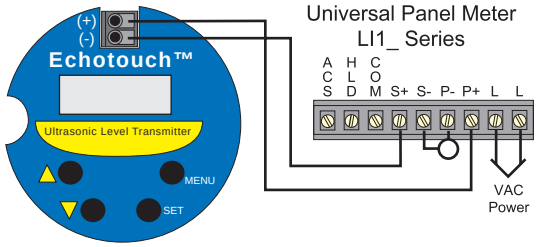

FLOWLINE 10500 Humbolt Street • Los Alamitos, CA 90720 • www.flowline.com • T (562) 598-3015 • F (562) 431-8507

Warranty, Service & Repair

To register your product with the manufacturer, fill out the enclosed warranty card and return it immediately to:

Flowline Inc.
10500 Humbolt Street
Los Alamitos, CA 90720.

If for some reason your product must be returned for factory service, contact Flowline Inc. to receive a Material Return Authorization number (MRA) first, providing the following information:

1. Part Number, Serial Number
2. Name and telephone number of someone who can answer technical questions related to the product and its application.
3. Return Shipping Address
4. Brief Description of the Symptom
5. Brief Description of the Application

Once you have received a Material Return Authorization number, ship the product prepaid in its original packing to:

Flowline Factory Service
MRA _____
10500 Humbolt Street
Los Alamitos, CA 90720

To avoid delays in processing your repair, write the MRA on the shipping label. Please include the information about the malfunction with your product. This information enables our service technicians to process your repair order as quickly as possible.

FLOWLINE®

Ultrasonic Level Transmitter
Model LU20
Owner's Manual

NRTL/C

Version 3.1A
© 1999 FLOWLINE Inc.
All rights reserved.
Manual # LU900005 11/99

WARRANTY

Flowline warrants to the original purchaser of its products that such products will be free from defects in material and workmanship under normal use and service for a period which is equal to the shorter of one year from the date of purchase of such products or two years from the date of manufacture of such products.

This warranty covers only those components of the products which are non-moving and not subject to normal wear. Moreover, products which are modified or altered, and electrical cables which are cut to length during installation are not covered by this warranty.

Flowline's obligation under this warranty is solely and exclusively limited to the repair or replacement, at Flowline's option, of the products (or components thereof) which Flowline's examination proves to its satisfaction to be defective. FLOWLINE SHALL HAVE NO OBLIGATION FOR CONSEQUENTIAL DAMAGES TO PERSONAL OR REAL PROPERTY, OR FOR INJURY TO ANY PERSON.

This warranty does not apply to products which have been subject to electrical or chemical damage due to improper use, accident, negligence, abuse or misuse. Abuse shall be assumed when indicated by electrical damage to relays, reed switches or other components. The warranty does not apply to products which are damaged during shipment back to Flowline's factory or designated service center or are returned without the original casing on the products. Moreover, this warranty becomes immediately null and void if anyone other than service personnel authorized by Flowline attempts to repair the defective products.

Products which are thought to be defective must be shipped prepaid and insured to Flowline's factory or a designated service center (the identity and address of which will be provided upon request) within 30 days of the discovery of the defect. Such defective products must be accompanied by proof of the date of purchase.

Flowline further reserves the right to unilaterally wave this warranty and to dispose of any product returned to Flowline where:

a. There is evidence of a potentially hazardous material present with product.
b. The product has remained unclaimed at Flowline for longer than 30 days after dutifully requesting disposition of the product.

THERE ARE NO WARRANTIES WHICH EXTEND BEYOND THE DESCRIPTION ON THE FACE OF THIS WARRANTY. This warranty and the obligations and liabilities of Flowline under it are exclusive and instead of, and the original purchaser hereby waives, all other remedies, warranties, guarantees or liabilities, express or implied. EXCLUDED FROM THIS WARRANTY IS THE IMPLIED WARRANTY OF FITNESS OF THE PRODUCTS FOR A PARTICULAR PURPOSE OR USE AND THE IMPLIED WARRANTY OF MERCHANT ABILITY OF THE PRODUCTS.

This warranty may not be extended, altered or varied except by a written instrument signed by a duly-authorized officer of Flowline, Inc.

SPECIFICATIONS

Step One

Range:	0.5 to 18 feet (15 cm to 5.4 m)	
Accuracy:	± 0.25% of span in air	
Resolution:	0.125” (3 mm)	
Frequency:	50 kHz	
Pulse rate:	2 pulses per second	
Beam width:	8° conical	
Deadband:	0.5’ (15 cm) minimum	
Blocking distance:	0.5 to 18 feet (15 cm to 5.4 m)	
Display type:	4 segment LCD	
Display units:	Inch (cm)	
Memory:	Non-volatile	
Supply voltage:	GP:	12-36 VDC
	IS:	12-32 VDC
Max loop resistance	GP:	900 Ohms @ 36 VDC (see below)
	IS:	900 Ohms @ 32 VDC (see below)
Signal output:	GP:	4-20 mA, 12-36 VDC (see below)
	IS:	4-20 mA, 12-32 VDC (see below)
Signal invert:	4-20 mA / 20-4 mA	
Calibration:	Push button	
Fail-safe diagnostics:	Reverts to 4 mA, 22 mA or remains constant	
Temperature rating:	F: -40º to 140º C: -40º to 60º (see below)	
Temp. compensation:	Automatic over entire range	
Pressure rating:	30 psi (2 bar) @ 25 °C., derated @ 1.667 psi (.113 bar) per °C. above 25 °C. (see below)	
Enclosure rating:	NEMA 4X (IP65)	
Enclosure material:	Polypropylene (PP), U.L. 94VO	
Transducer material:	Polyvinylidene Fluoride (PVDF)	
Mounting threads:	2” NPT (2” G)	
Mounting gasket:	Viton (2”) metric only	
Conduit connection:	1/2” NPT (1/2” BSP)	
CE Compliance:	EN 50082-2 immunity	
	EN 55011 emission	
CSA Certificate:	LR79326-10	

*GP = General Purpose IS Intrinsically Safe

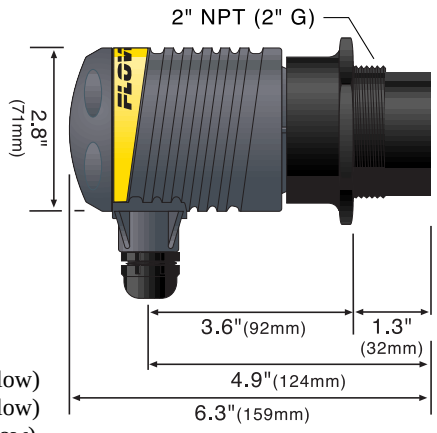

Technology

An ultrasonic sound wave is pulsed two times per second from the base of the transducer. The sound wave reflects against the process medium below and returns to the transducer. The micro-processor based electronics measure the time of flight between the sound generation and receipt, and translates this figure into the distance between the transmitter and process medium below.

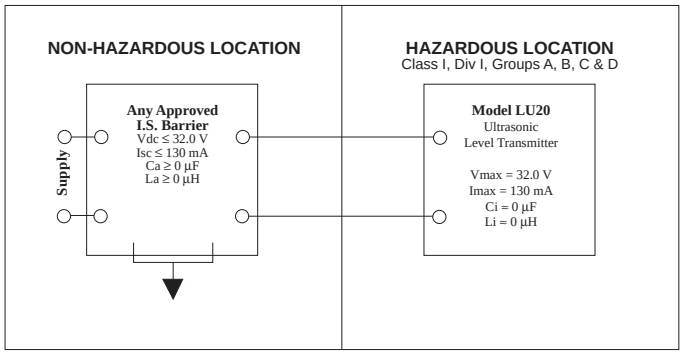

Control drawing for the LU20-5001-IS ultrasonic level transmitter approved under the entity concept as an I.S. apparatus

Control Drawing: LU20CD
Rev. 7-24-97

LR79326-10

NRTL/C

Intrinsically Safe/
Securite Intrinseque
Exia

For use in
Hazardous Locations:
Class I, Groups A, B, C & D
Class II, Groups E, F & G
Class III
Temperature Code: T3C

Intrinsically Safe when used with an approved I.S. barrier. Entity Parameters

V_{max} = 32.0 VDC
I_{max} = 130 mA
C_i = 0 µF
L_i = 0 µH

Warning: Suitable for Class I, Groups A, B, C & D; Class II, Groups E, F & G; Class III, T3C; when used with an approved I.S. barrier. Substitution of components may impair intrinsic safety LU20-50X1-IS requirements for Intrinsically Safe operation

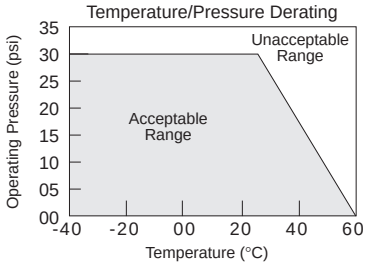

Part#	Description	Thread
LU20-5001	General Purpose	2” NPT
LU20-5061	General Purpose	2” G
LU20-5001-IS	Intrinsically Safe	2” NPT
LU20-5061-IS	Intrinsically Safe	2” G

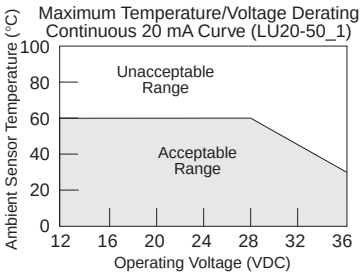

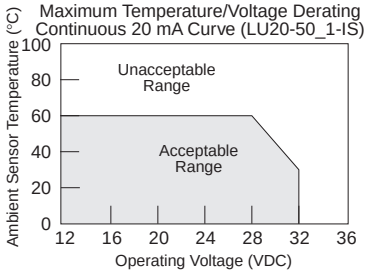

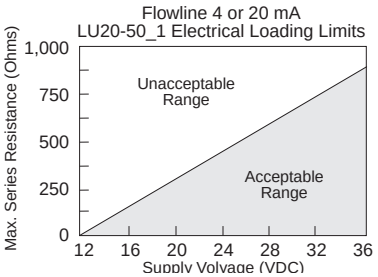

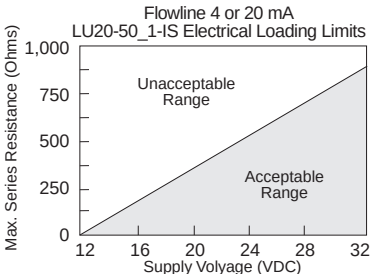

⚠ Warning ⚠

The LU20 is a loop powered device. The load should never exceed 900 Ohms.

LU20-50_1-IS must be installed in accordance with drawing LU20CD rev B (see steps) for safe operation in a hazardous area.

When installing the LU20, never tighten the transmitter from the body. Always use the wrench flat located above the threads.

Always install the 2” Viton gasket with the LU20-5061 and the LU20-5061-IS. The G threaded version of the Echotouch will not seal unless the gasket is installed properly.

SAFETY PRECAUTIONS

Step Two

⚠ About this Manual:

PLEASE READ THE ENTIRE MANUAL PRIOR TO INSTALLING OR USING THIS PRODUCT. This manual includes information on all four versions of the continuous ultrasonic level transmitter from Flowline; model LU20-50_1 and LU20-50_1-IS. Please refer to the part number located on the sensor label to verify the exact model which you have purchased.

⚠ User's Responsibility for Safety:

Flowline manufactures a wide range of liquid level sensors and technologies. While each of these technologies are designed to operate in a wide variety of applications, it is the user's responsibility to select a technology that is appropriate for the application, install it properly, perform tests of the installed system, and maintain all components. The failure to do so could result in property damage or serious injury.

⚠ Proper Installation and Handling:

Because this is an electrically operated device, only properly-trained staff should install and/or repair this product. Use a proper sealant with all installations. Note: Always install the 2" Viton gasket with the LU20-5061 and the LU20-5061-IS. The G threaded version of the Echotouch will not seal unless the gasket is installed properly. Never overtighten the transmitter within the fitting. Always check for leaks prior to system start-up.

⚠ Wiring and Electrical:

A supply voltage of 12-36 VDC is used to power the LU20-50_1 transmitter and a supply voltage of 12-32 VDC is used to power the LU20-50_1-IS. The sensor systems should never exceed a maximum of 36 VDC for the LU20-50_1 and 32 VDC for the LU20-50_1-IS. Electrical wiring of the sensor should be performed in accordance with all applicable national, state, and local codes.

⚠ Temperature and Pressure:

The LU20 is designed for use in application temperatures from -40 °C (-40 °F) to 60 °C (140 °F), and for use at pressures up to 30 psi @ 25 °C, derated @ 1.667 psi per °C above 25 °C.

⚠ Material Compatibility:

The continuous ultrasonic level transmitter, LU20, is made of two materials. The enclosure is of Polypropylene (PP) and the transducer is made of Polyvinylidene Fluoride (PVDF). Make sure that the model which you have selected is chemically compatible with the application liquids. While the transmitter housing is liquid-resistant when installed properly, it is not designed to be immersed. It should be mounted in such a way that it does not normally come into contact with fluid.

⚠ Flammable, Explosive and Hazardous Applications:

Only the LU20-50_1-IS is rated for use in hazardous locations. Refer to the Certificate of Compliance for all applicable intrinsically safe ratings and entity parameters for the LU20-50_1-IS. Refer to the National Electric Code (NEC) for all applicable installation requirements in hazardous locations. DO NOT USE THE LU20-50_1 GENERAL PURPOSE TRANSMITTER IN HAZARDOUS LOCATIONS.

⚠ Make a Fail-Safe System:

Design a fail-safe system that accommodates the possibility of transmitter or power failure. In critical applications, Flowline recommends the use of redundant backup systems and alarms in addition to the primary system.

DEFINITIONS

Step Three

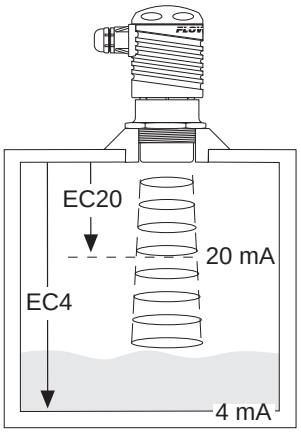

EC4: The 4 mA setting for the LU20. The EC4 is the distance from the bottom of the LU20 to the 4 mA set point. This setting is measured in either inches or centimeters on the display. The EC4 setting is typically greater that the EC20 setting.

EC20: The 20 mA setting for the LU20. The EC20 is the distance from the bottom of the LU20 to the 20 mA set point. This setting is measured in either inches or centimeters on the display. The EC20 setting is typically greater that the EC4 setting.

SAF1/SAF2/SAF3: Fail-Safe setting for the LU20. Use the SAF_ settings to determine a fail-safe mode for the current signal. When [SAF1] is set, the current will increase to 22 mA if the signal becomes LOST. When [SAF2] is set, the current will decrease to 4 mA if the signal becomes LOST. When [SAF3] is set, the current will remain constant if the signal becomes LOST.

FAST/SLOW: Setting for echo averaging on the LU20. [FAST] is the typical setting for the LU20 to operate. [SLOW] is designed to help dampen out effects caused by severe turbulence. In the [FAST] mode, the LU20 will average 2 signal responses per second and update every second. In the [SLOW] mode, the LU20 will average signal returns over the preceding 10 seconds. When used with [SAF 1/2/3], the time for the current to default is 30 seconds for [FAST] mode and 2.5 minutes for [SLOW] mode.

ALIN: Indicates that the unit is in the Alignment mode. Display will show the return signal strength in dB's. Used as an indicator for mechanical alignment of the LU20 and/or signal attenuation. Typical readings range between 2 and 60 dB's. For optimum alignment, first energize the unit and receive a valid return signal. Then select the ALIN mode and adjust the LU20 until the display is maximized.

ON/OFF: Actual setting for ALIN mode. The ALIN mode must be turned [OFF] when alignment is completed. This mode will not automatically default back to [LEVL].

MAXR: Used as an indication for [MAXR] or maximum range. The MAXR sets the maximum tank height and will filter out all returns greater than this value.

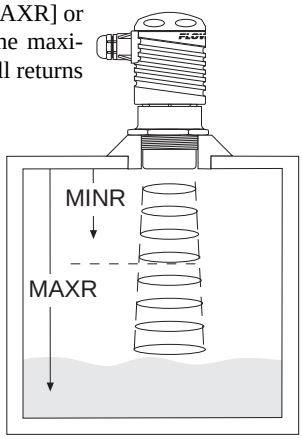

(value): Actual MAXR setting. The maximum distance is 216.0 inches.

MINR: Used as an indication for [MINR] or the minimum range. The MINR value is the deadband closest to the transducer face where no signal will be generated. The MINR sets the minimum distance between the liquid and the transducer.

(value): Actual MINR setting. The minimum distance is 6.0 inches.

PROGRAMMING

Step Four

EC4:

1. Hold [MENU] key until EC4 appears in display.
2. Release [MENU] key and wait until a value appears. This value is the current measured level value.
3. If this is acceptable, press [SET] to lock the value as the new EC4 set point. If not, press either the [▲] or [▼] keys once and the old setting for the EC4 will appear.
4. From here, use the [▲] or [▼] keys to raise or lower the value to the desired value.
5. Press the [SET] key to enter this value as the new EC4 set point.

EC20:

1. Hold [MENU] key until EC20 appears in display.
2. Release [MENU] key and wait until a value appears. This value is the current measured level value.
3. If this is acceptable, press [SET] to lock the value as the new EC20 set point. If not, press either the [▲] or [▼] keys once and the old setting for the EC4 will appear.
4. From here, use the [▲] or [▼] keys to raise or lower the value to the desired value.
5. Press the [SET] key to enter this value as the new EC20 set point.

SAF1/SAF2/SAF3:

1. Hold [MENU] key until SAF1, SAF2 or SAF3 appears in the display.
2. Release [MENU] key and hold [SET] key to toggle between SAF1, SAF2 and SAF3.
3. When desired setting is reached, release [SET] key. The last displayed setting will be locked into memory. To change, start again at step 1.

FAST/SLOW:

1. Hold [MENU] key until FAST or SLOW appears in the display.
2. Release [MENU] key and hold [SET] key to toggle between FAST and SLOW.
3. When desired setting is reached, release [SET] key. The last displayed setting will be locked into memory. To change, start again at step 1.

ALIN:

1. Hold [MENU] key until ALIN appears in the display.
2. Continue to hold [MENU] key until OFF appears in the display.
3. Release [MENU] key and hold [SET] key to toggle from OFF to ON.
4. Release [SET] key. The LU20 is now in ALIN mode.
5. To exit ALIN mode, repeat steps 1-4 changing from ON to OFF.

MAXR:

1. Hold [MENU] key until MAXR appears in the display.
2. Continue to hold [MENU] key until a value appears in the display. This value is the current MAXR setting.
3. If this is acceptable, press [SET] to lock the value as the MAXR setting. If not, use the [▲] or [▼] keys to raise or lower the value to the desired setting.
4. Press the [SET] key to enter this value as the new MAXR setting.

MINR:

1. Hold [MENU] key until MINR appears in the display.
2. Continue to hold [MENU] key until a value appears in the display. This value is the current MINR setting.
3. If this is acceptable, press [SET] to lock the value as the MINR setting. If not, use the [▲] or [▼] keys to raise or lower the value to the desired value.
4. Press the [SET] key to enter this value as the new MINR setting.

WIRING

Step Five

The LU20-50_1 requires 12-36 VDC power with at least 25 mA supply in order to operate.

1. Wiring to a Flowline Continuous Controller (Model LC52):

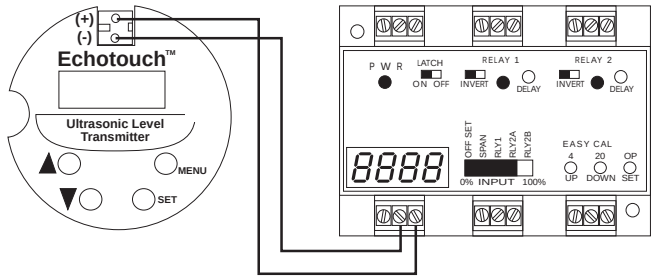

2. Wiring to a Two-Wire Loop Indicator (Model LU20-50_1):

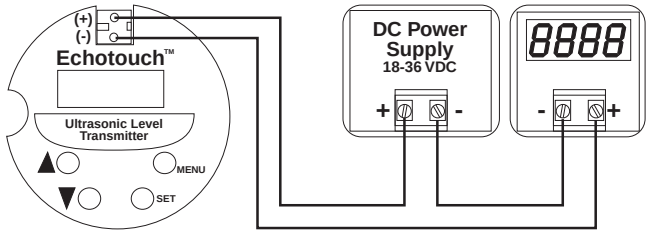

3. Wiring to a PLC (LU20-50_1):

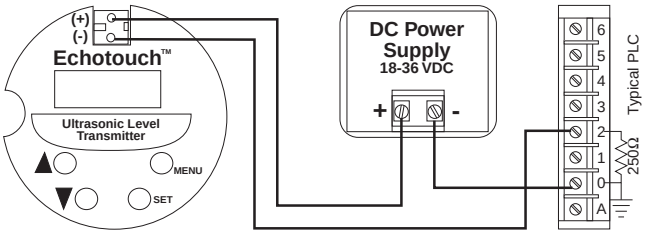

INSTALLATION

Step Six

The LU20-50_1-IS requires 12-32 VDC power with at least 25 mA supply in order to operate. The follow provides an overview of wiring the LU20-50_1-IS to various devices. Please note that a barrier must be installed between the Echotouch and the device and the barrier must be located within the nonhazardous location.

1. Hazardous System Diagram

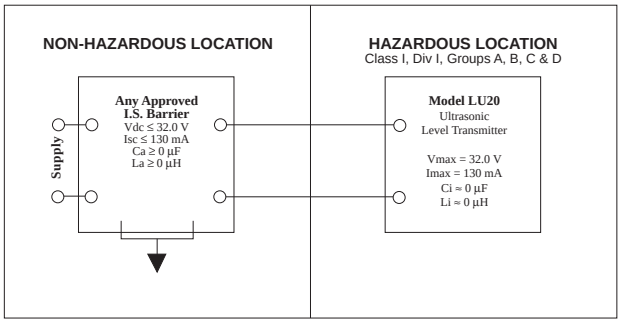

Control drawing for the LU20-5001-IS ultrasonic level transmitter approved under the entity concept as an I.S. apparatus

Control Drawing: LU20CD
Rev. 7-24-97

2. Wiring to a Flowline Continuous Controller

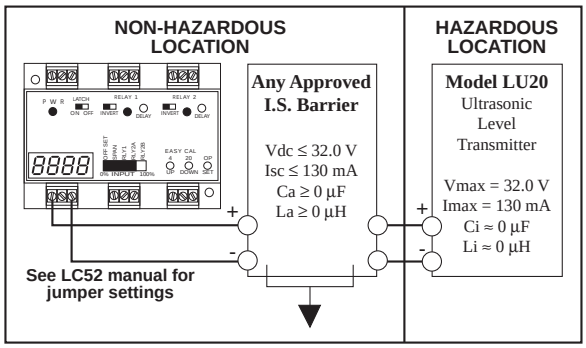

3. Wiring to a Two-Wire Loop Indicator

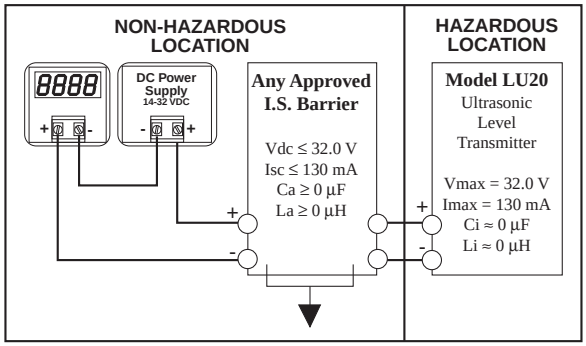

4. Wiring to a PLC

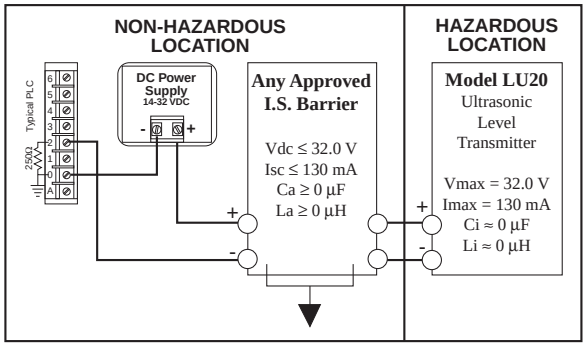

INSTALLATION

Step Seven

Mounting the LU20 is critical to the successful operation of the transmitter. Avoid the following parameters:

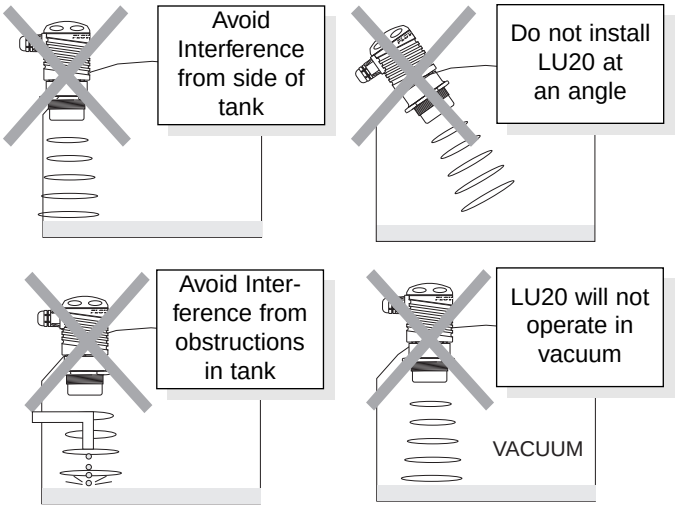

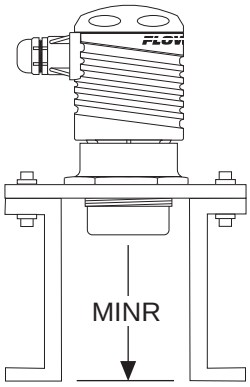

Minimum Range (MINR) Setting

If installing the LU20 in a flange or any device which recesses the bottom of the transmitter, use the MINR setting. The minimum value for the MINR setting is the distance from the bottom of the transmitter to the end of the flange. Never set MINR to less than 6.0 inches.

Maximum Application Range

The maximum range of LU20 is 18 feet at 110 dB. Under less than ideal conditions, a number of factors can reduce the overall quality of signal return and shorten the accurate range of the transmitter. To determine the maximum application range of the product, follow the signal return formula against the echo attenuation graph below.

Echo Attenuation Graph

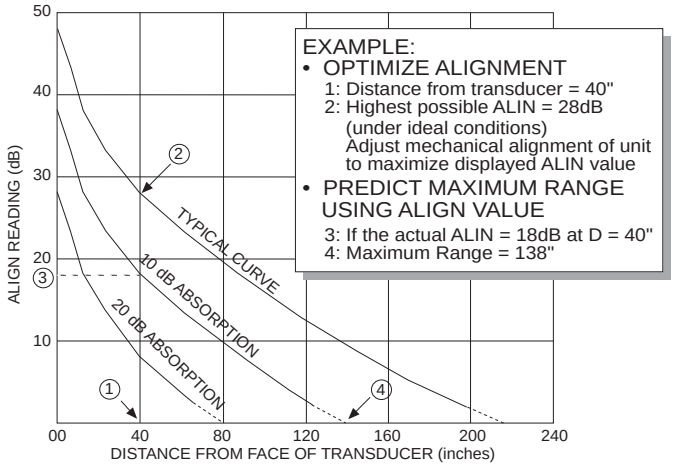

INSTALLATION

Step Eight

Factory Settings:

The LU20 is preset at the factory. When powering up the transmitter the first time, the factory settings will be active. If at any time in you need to return to these settings, remove power from the LU20 and wait 10 seconds. Press the [Set] and [Menu] buttons simultaneously while powering up the transmitter.

EC 4	216" (548.4 cm)	OFF	OFF
EC20	8" (20.3 cm)	MAXR	N/A
SAF1/2/3	SAF1	value	216" (548.4 cm)
Fast/Slow	FAST	MINR	N/A
ALIN	N/A	value	6" (15.2 cm)

Changing Display Units:

The LU20 comes preset to measure in inches. To change the unit to display centimeters, remove power to the LU20 and wait 10 seconds. Press [▲] and [Set] simultaneously while powering up the transmitter. The LU20 will now read in centimeters. To return to inches, remove power and wait 10 seconds. Press [▼] and [Set] simultaneously while powering up the transmitter.

Depth (Feet)	Radius (Inches)	Radius (cm)
1	1.2	3.1
2	2.1	5.2
3	2.9	7.3
4	3.7	9.5
5	4.6	11.6
6	5.4	13.7
7	6.2	15.9
8	7.1	18.0
9	7.9	20.1
10	8.8	22.3
11	9.6	24.4
12	10.4	26.5
13	11.3	28.7
14	12.1	30.8
15	13.0	32.9
16	13.8	35.1
17	14.6	37.2
18	15.5	39.3

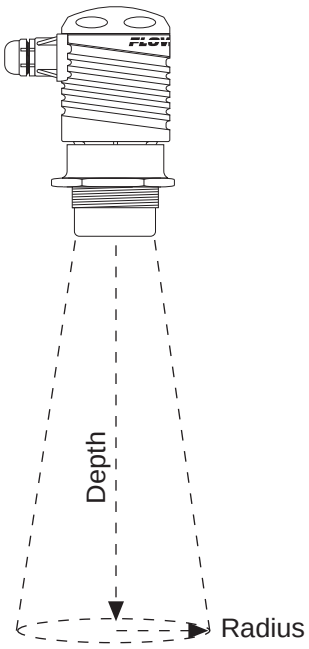

⚠ Warning ⚠

Always install the 2” Viton gasket with the LU20-5061 and the LU20-5061-IS. The G threaded version of the Echotouch will not seal unless the gasket is installed properly.

TROUBLESHOOTING

Step Nine

LOST Signal:

A reading of LOST in the display of the LU20 indicates the transmitter is not receiving a valid return signal. If LOST appears, please check the following troubleshooting items:

1. Beam cone interference such as the side wall, ladders, seams, rungs or pipes within the LU20’s beam cone.
2. Proper installation such that the LU20 is installed level and free from interference from the installation fitting or flange.
3. Sufficient power being supplied to the LU20. The LU20-50_1 requires 12-36 VDC power with a minimum supply of 25 mA. The LU20-50_1-IS requires 12-32 VDC power with a minimum supply of 25 mA.
4. Proper programming of the MAXR or MINR function. For best results, set the MAXR function as the distance from the bottom of the tank to the bottom of the transmitter. Also set the MINR distance above the highest level in the tank. Do not set the MINR to less than 6 inches.
5. Make sure that the transmitter is not installed at an angle. Even a 5 degree offset can reduce the signal return strength greatly.

Other Hints:

Current must change with changes in level. Example: For the illustration below, as level increases, the current output will increase and as the level decreases, the current output will decrease. If the output of the LU20 is always reading 4 mA or 20 mA, check the input values for the LU20.

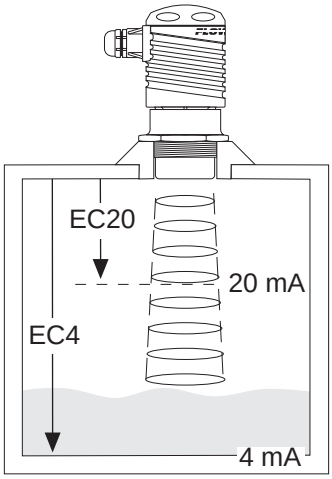

PENTAIR

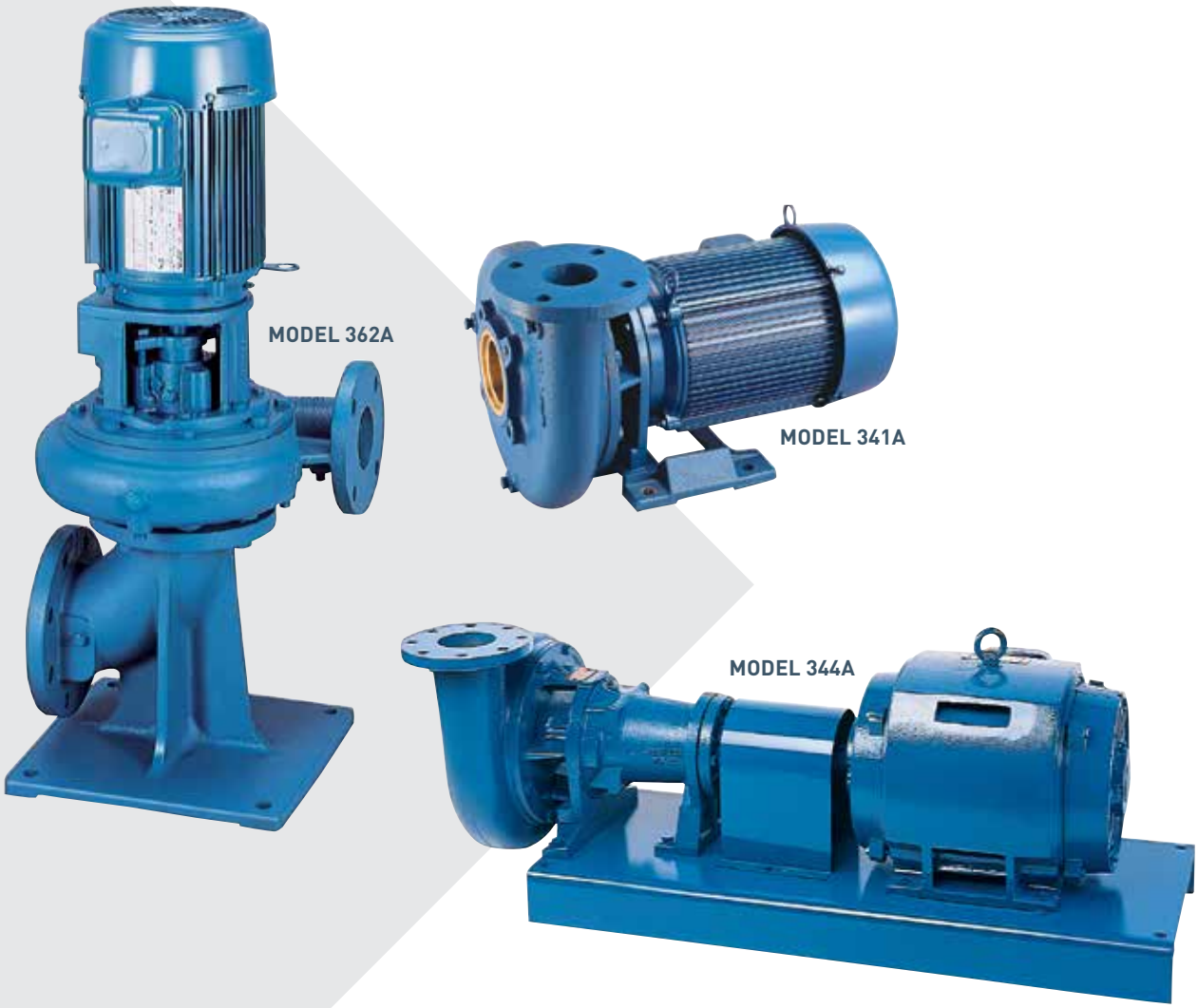

AURORA® 340A/360A SERIES
SINGLE STAGE END SUCTION PUMPS

www.AuroraPump.com

AURORA® 340A/360A SERIES
Single Stage End Suction Pumps

Capacities to 4500 G.P.M. (1022 m^3/hr)
Heads to 370 Feet (112 m)
Temperatures to 300°F (149°C)

Setting New Standards of Efficiency

Liquid handling requirements are much more involved than they were five years ago. The variety of liquids being handled has increased along with temperatures and pressures. Today's installations demand quiet, smooth-running pumps with long life. Aurora Pump's 90 years of experience with design, sales and manufacturing of centrifugal pumps has led to the 340A/360A Series. These modern pumps with a clean, straightforward design were developed with maximum interchangeability in mind. Aurora's highly reliable 340A/360A pumps offer an economical solution to your liquid handling problems.

End suction products such as the flexible coupled horizontal pump seen above are used in offices and high rise buildings for internal environment control. End suction pumps come in a variety of configurations including close coupled, flexible coupled, horizontal or vertical mounted units.

Standard & Optional Features

Standard – 340A/360A Series

- Discharge position No. 1
- Regreaseable bearings (Models 344A, 364A)
- Standard JM motor (Models 341A, 344A)
- Standard JP motor (Models 361A, 364A)
- Coupling guard (Models 344A, 364A)

Standard – 360A Series Only

- Interchangeable stuffing box
- Graphite impregnated acrylic packing

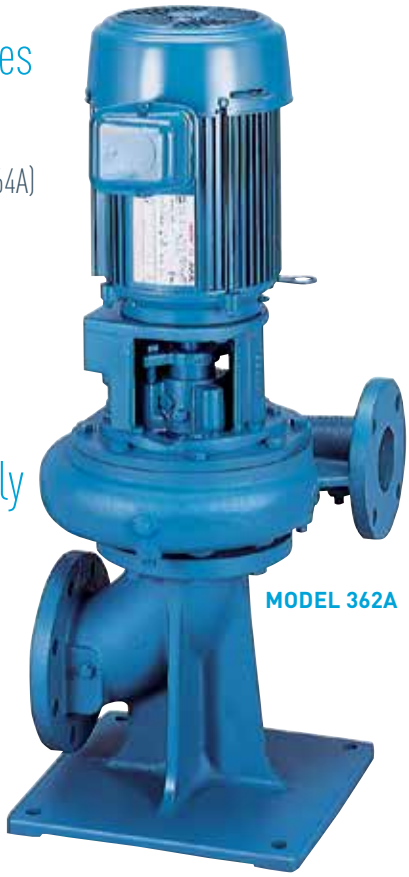

MODEL 362A

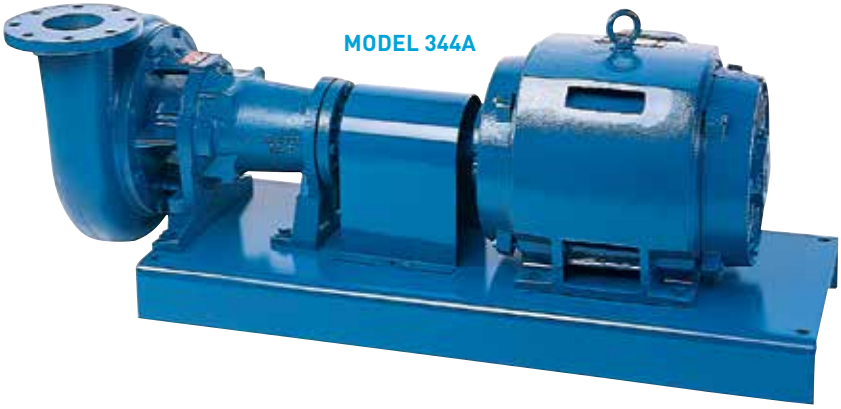

MODEL 344A

Optional – 340A/360A Series

- Standard 340A/360A Series pumps are designed to meet the requirements of most applications. However, to meet special services, a number of optional features have been made available. For services not handled by the features listed, refer to the factory.
- All iron construction
- 316 stainless steel sleeve
- Stainless steel shaft
- Impeller wearing rings
- Oil lubricated ball bearings (Models 344A, 364A)
- Sealed permanently lubricated ball bearings (power frames Nos. 1, 2 and 3)
- Alternative discharge positions Nos. 2, 3 and 4 (see pages 13 and 14)
- Fabricated stainless steel drip-rim bases (Models 344A, 364A)
- Formed steel bases (Models 344A, 364A)
- High temperature mechanical seal
- Variety of alternative constructions

Optional – 360A Series Only

- All bronze construction
- Hardened shaft sleeve (for packing)
- Various mechanical seal types
- Water jacketed stuffing box
- Semiopen impellers (Model 364A)
- Double row thrust bearings (Model 364A)
- Packing with lantern ring

Pump Features

A. Computer Machined
major components with 360 degree registered fits to assure concentricity of all pump parts.

B. Precision Cast, Dynamically Balanced, Enclosed Impeller
is keyed to the shaft extension and secured by a capscrew and washer. Gaskets are used to prevent leakage to shaft end.

C. Oil Seals
and nonsparking neoprene rotating slingers protect both bearings during pump operation and pump washdown.

D. Mechanical Seal
has hot water carbon against ceramic face for optimum hot water performance. Long life is also assured with 303 stainless steel metal parts and Buna-N elastomer.

E. Power Frame
provides heavy duty maximum interchangeability for flexible coupled applications.

F. Hydrostatic Test
of pumps at factory guarantees casting and seal integrity.

G. Bronze Shaft Sleeve
prevents shaft wear, is slip fit over the shaft, keylocked and extends the full length of seal box to eliminate corrosion of the shaft by the pumped liquid. This cancels the requirement for high cost, special stainless steel or alloy shafts.

H. Back Pullout
design simplifies disassembly. The suction and discharge piping is not disturbed at disassembly.

I. Lubrication Fittings
are conveniently located for quick accessibility and provide positive bearing lubrication. Oil lubrication optionally available.

J. Carbon Steel Shaft
designed for minimum deflection, not to exceed .002" at the sealing faces at maximum load.

K. Bearings
selected for 3 year minimum life at maximum load. Average bearing life 5 x minimum. Grease lube standard.

L. Close Coupled Motors
in smaller frame sizes are supported off the motor bracket for maximum rigidity.

M. Case Wearing Ring
prevents wear on casing and is easily and inexpensively replaced. Impeller rings are available. Front case wearing rings are standard on all models and size pumps. Rear case wearing rings are standard only on 2" discharge and larger model 360A Series pumps. Front impeller wearing rings are optional on all models and size pumps. Rear impeller wearing rings are optional only on 2" discharge and larger model 340A/360A Series pumps.

N. Large Capacity Oil Reservoir
is provided on power frame Model 344A and 364A pumps for optional oil lube.

O. Rear Support Foot
provides support and simplifies coupling alignment. All supports are slotted to simplify back pullout of power frame.

Pump Features

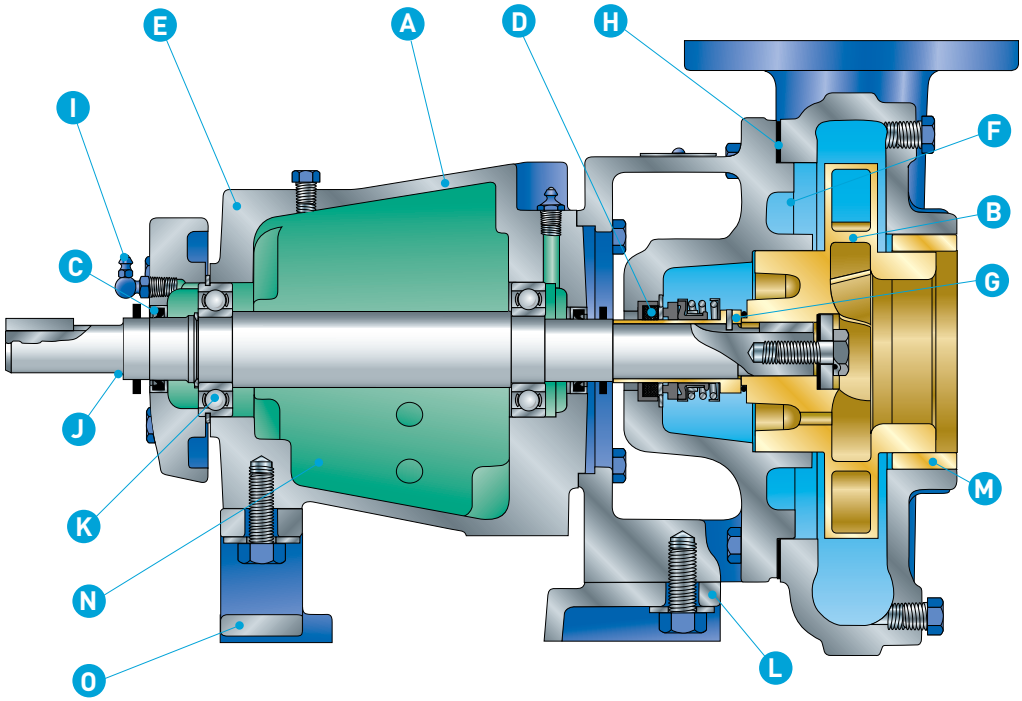

MODEL 344A SHOWN – ON ALL 340A SERIES PUMPS
MECHANICAL SEALS ARE STANDARD

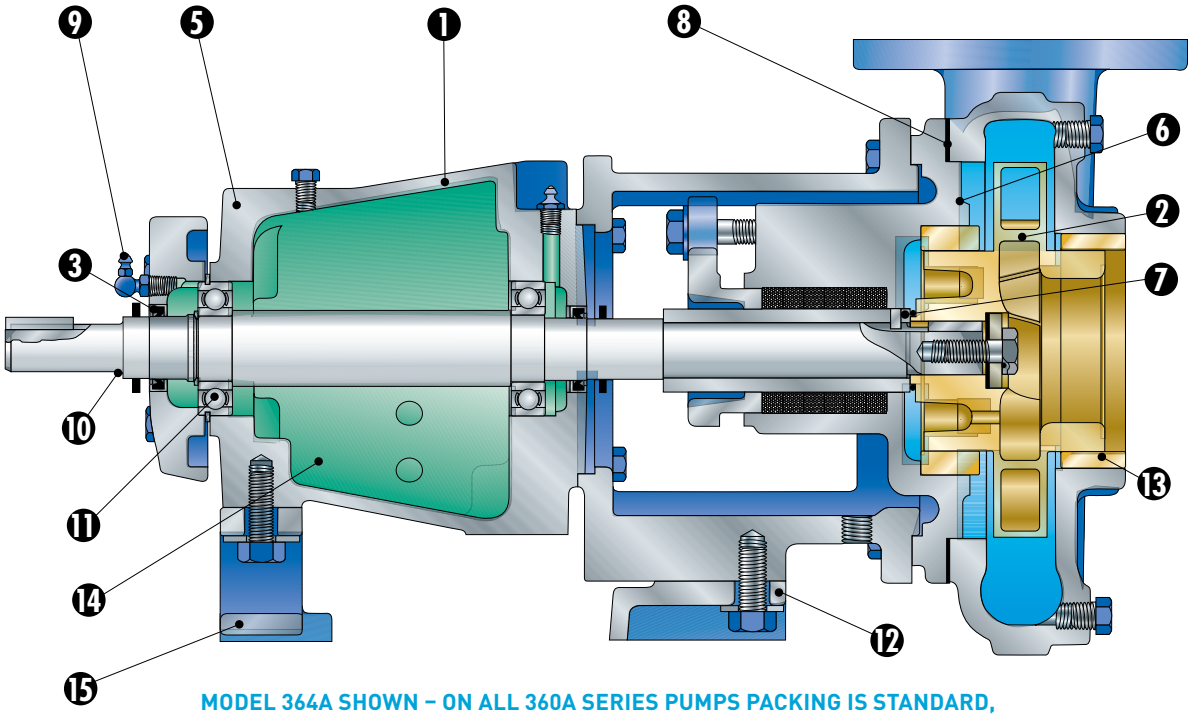

MODEL 364A SHOWN – ON ALL 360A SERIES PUMPS PACKING IS STANDARD,
MECHANICAL SEALS ARE OPTIONAL

340A SERIES Range Charts – 60 Hertz

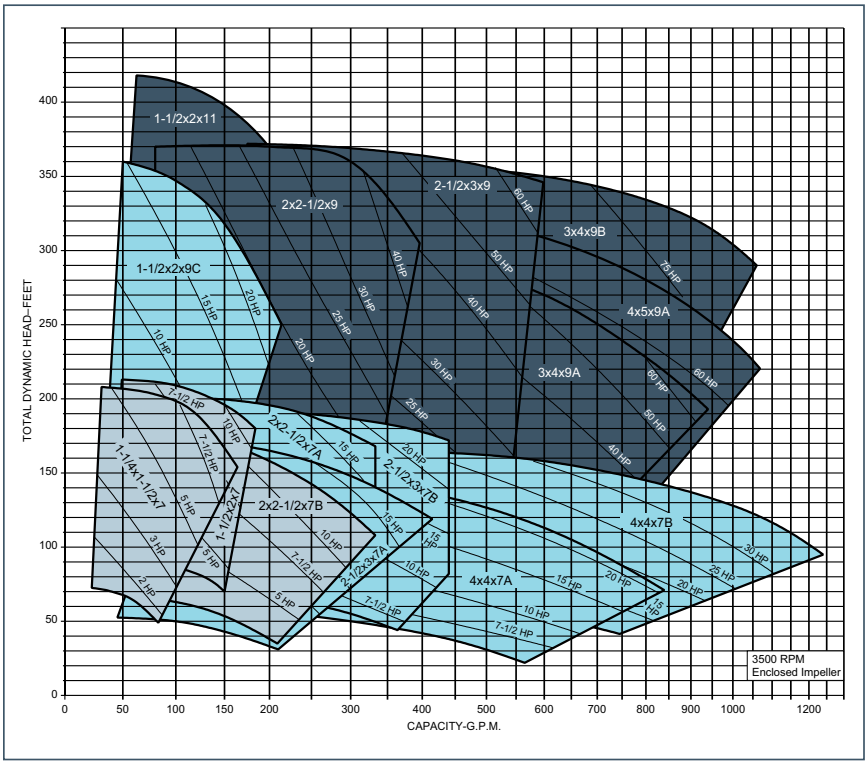

3500 RPM

Individual performance curves should be checked for final selection.
For selections not shown on this chart, please refer to the factory.

	Power Frame No. 1		
	Power Frame No. 2		
	Power Frame No. 3		
Maximum Horsepower	Close Coupled	Open Drip Proof	60
		TE & EX PR	50
	Frame Mounted		100

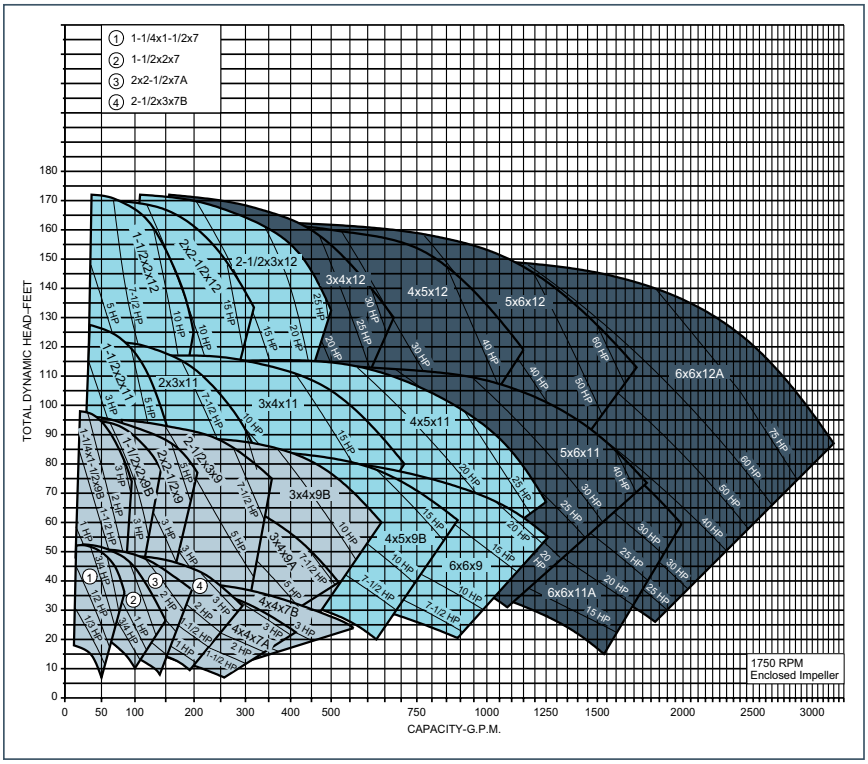

1750 RPM

Individual performance curves should be checked for final selection.
For selections not shown on this chart, please refer to the factory.

	Power Frame No. 1		
	Power Frame No. 2		
	Power Frame No. 3		
Maximum Horsepower	Close Coupled	Open Drip Proof	50
		TE & EX PR	50
	Frame Mounted		100

340A SERIES Range Charts – 50 Hertz

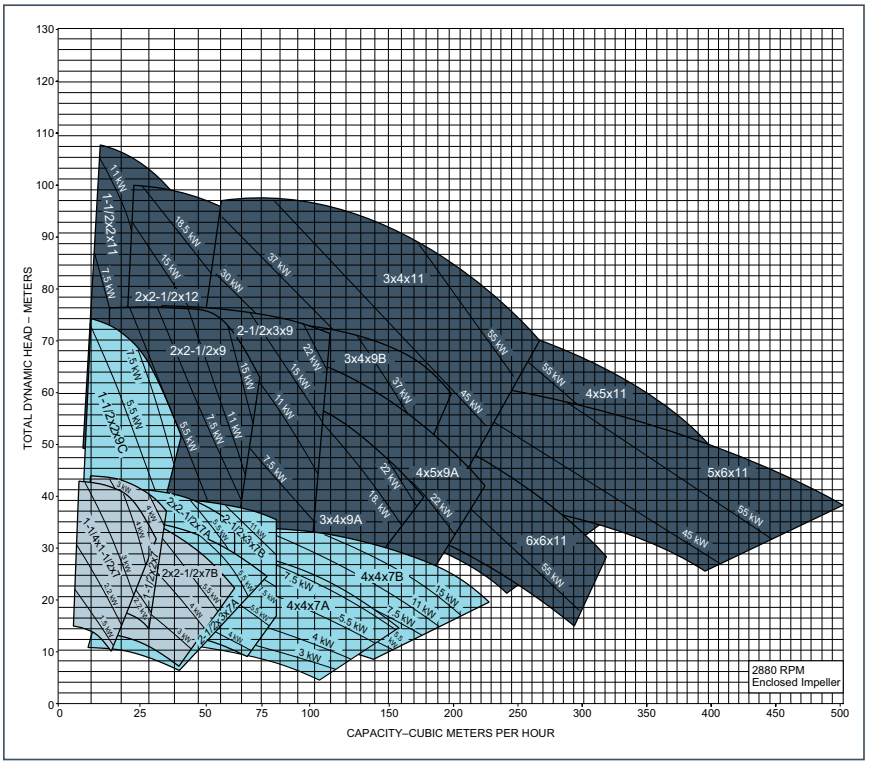

2880 RPM

Individual performance curves should be checked for final selection. For selections not shown on this chart, please refer to the factory.

	Power Frame No. 1		
	Power Frame No. 2		
	Power Frame No. 3		
Maximum Horsepower	Close Coupled	Open Drip Proof	60
		TE & EX PR	50
	Frame Mounted		100

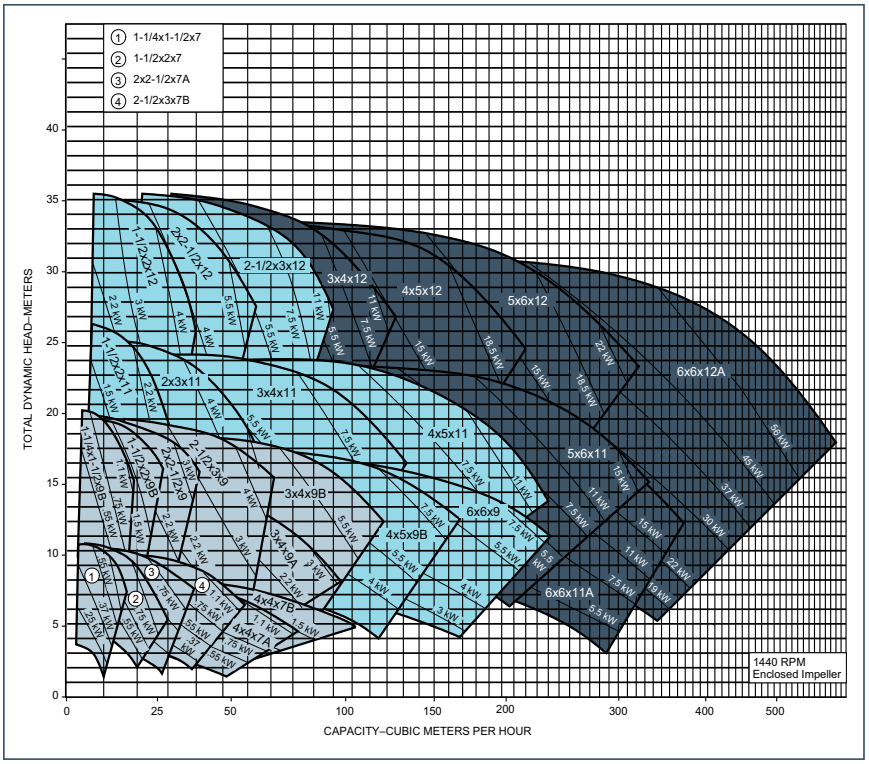

1440 RPM

Individual performance curves should be checked for final selection. For selections not shown on this chart, please refer to the factory.

	Power Frame No. 1		
	Power Frame No. 2		
	Power Frame No. 3		
Maximum Horsepower	Close Coupled	Open Drip Proof	50
		TE & EX PR	50
	Frame Mounted		100

360A SERIES Range Charts – 60 Hertz

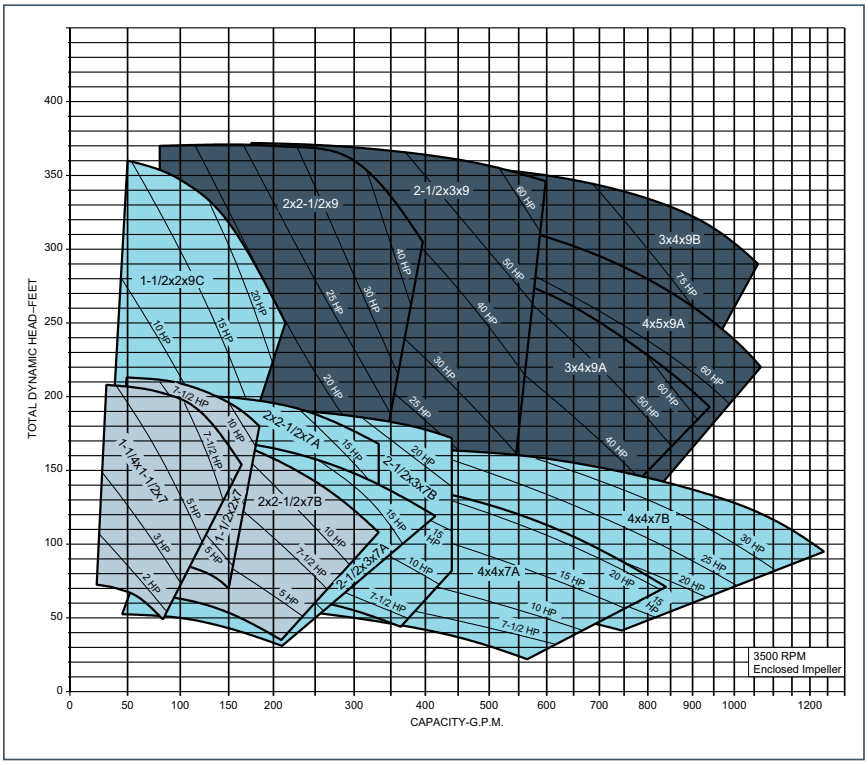

3500 RPM

Individual performance curves should be checked for final selection.
For selections not shown on this chart, please refer to the factory.

	Power Frame No. 1		
	Power Frame No. 2		
	Power Frame No. 3		
Maximum Horsepower	Close Coupled	Open Drip Proof	60
		TE & EX PR	50
	Frame Mounted		100

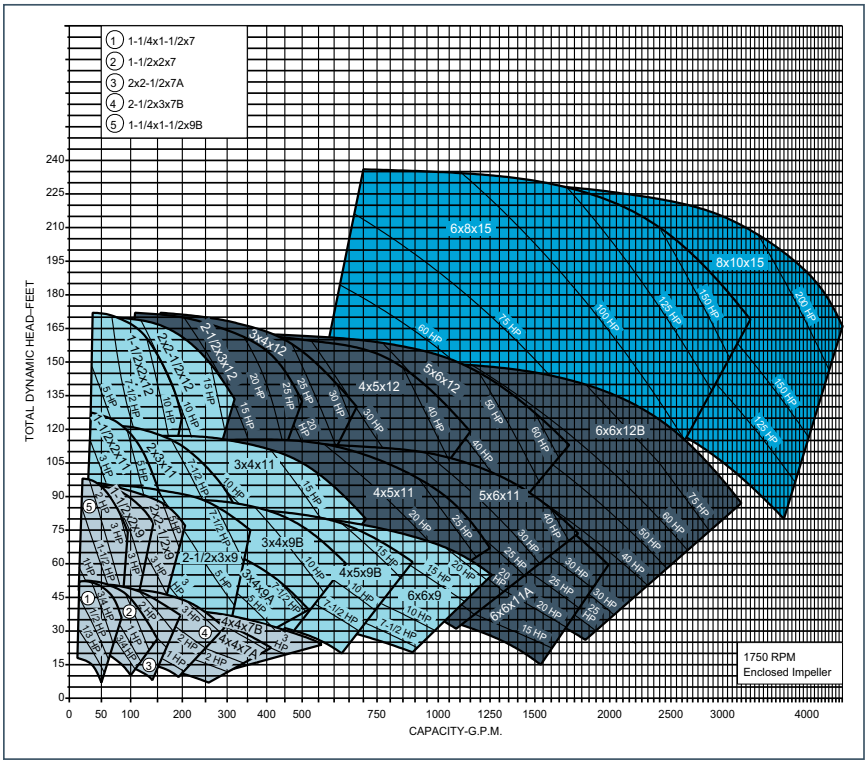

1750 RPM

Individual performance curves should be checked for final selection.
For selections not shown on this chart, please refer to the factory.

	Power Frame No. 1		
	Power Frame No. 2		
	Power Frame No. 3		
	Power Frame No. 21		
Maximum Horsepower	Close Coupled	Open Drip Proof	50
		TE & EX PR	50
	Frame Mounted		250

360A SERIES Range Charts – 50 Hertz

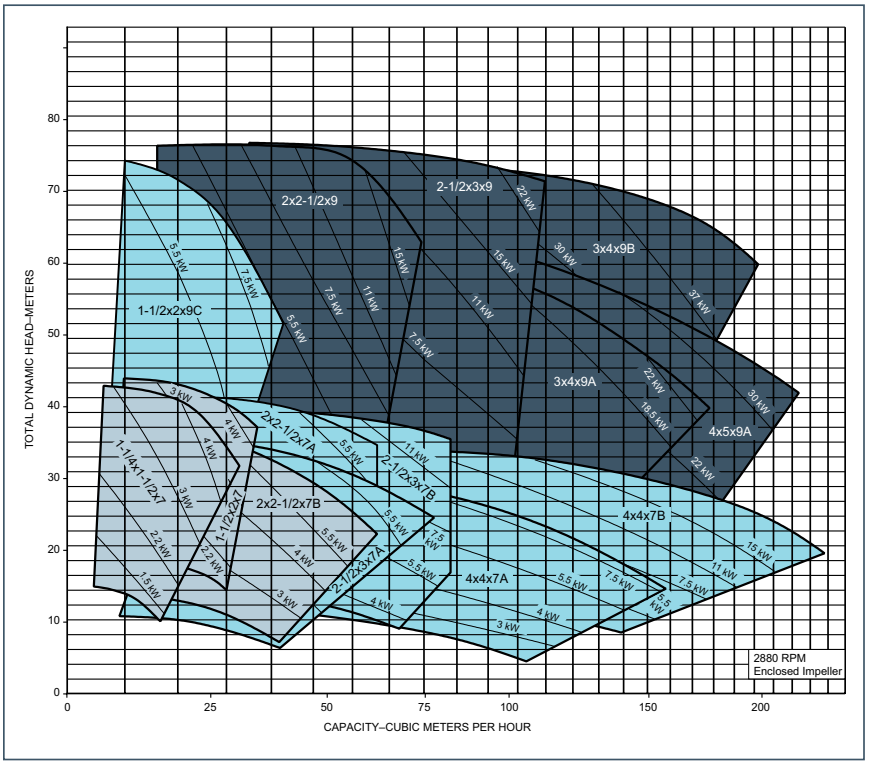

2880 RPM

Individual performance curves should be checked for final selection.
For selections not shown on this chart, please refer to the factory.

	Power Frame No. 1		
	Power Frame No. 2		
	Power Frame No. 3		
Maximum Horsepower	Close Coupled	Open Drip Proof	60
		TE & EX PR	50
	Frame Mounted		100

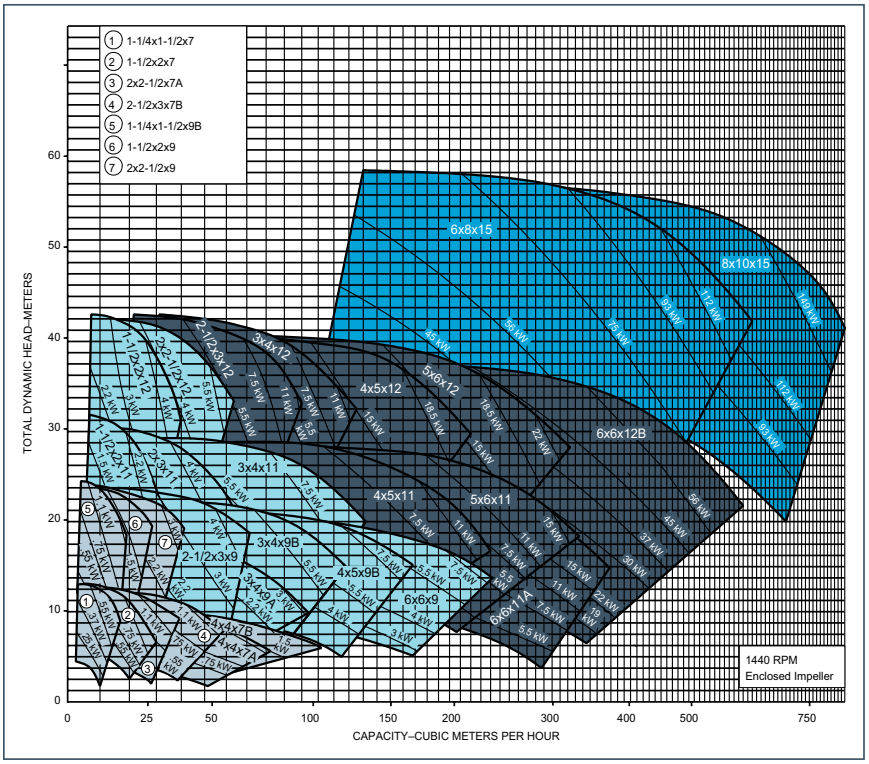

1440 RPM

Individual performance curves should be checked for final selection.
For selections not shown on this chart, please refer to the factory.

	Power Frame No. 1		
	Power Frame No. 2		
	Power Frame No. 3		
	Power Frame No. 21		
Maximum Horsepower	Close Coupled	Open Drip Proof	50
		TE & EX PR	50
	Frame Mounted		250

Materials of Construction

Pump Part	Standard Fitted	Bronze Fitted	All Iron	*All Bronze
Casing	Cast Iron – ASTM A48	Cast Iron – ASTM A48	Cast Iron – ASTM A48	Bronze – ASTM B62
Case Wearing Ring	Bronze – ASTM B62	Bronze – ASTM B62	Cast Iron – ASTM A48	Bronze – ASTM B62
Impeller	Cast Iron – ASTM A48	Bronze – ASTM B584	Cast Iron – ASTM A48	Bronze – ASTM B584
Motor Bracket	Cast Iron – ASTM A48	Cast Iron – ASTM A48	Cast Iron – ASTM A48	Cast Iron – ASTM A48
Shaft	Steel – AISI C1045	Steel – AISI C1045	Steel – AISI C1045	Steel – AISI C1045
Sleeve	Bronze – ASTM B62	Bronze – ASTM B62	Stainless Steel – AISI 316	Bronze – ASTM B62
Power Frame (344A & 364A)	Cast Iron – ASTM A48	Cast Iron – ASTM A48	Cast Iron – ASTM A48	Cast Iron – ASTM A48
Mechanical Seal 340A Series	303 stainless steel metal parts, Buna-N elastomer parts, ceramic seat and carbon washer			303 stainless steel metal parts, Viton® elastomer, ceramic seat, and carbon washer
360A Series (Optional)				
Stuffing Box	Cast Iron – ASTM A48	Cast Iron – ASTM A48	Cast Iron – ASTM A48	Bronze – ASTM B62
Packing (Standard) – 360A Series Only	Interwoven, graphited fiber diagonally cut			

* All Bronze optionally available in 361A and 364A pumps only.

Design Details

Area	Description	Power Frame 1	2	3	21
Pump Shaft	Rotation–from driver end	CW	CW	CW	CW
	Diameter at impeller	7/8	1-1/4	1-1/4	1-5/8-12
	Diameter at shaft sleeve	1	1-3/8	1-3/8	2-1/4
	Diameter between bearings	1-3/8	1-15/16	2-3/8	3-1/4
	Diameter at coupling end	7/8	1-1/8	1-1/8	2-3/8
	Coupling key–square	3/16	1/4	1/4	5/8
	Max. deflection at seal face	.002	.002	.002	.002
Ball Bearings	Bearing (inboard radial)	206K	308K	310K	313
	Bearing (outboard thrust)	206KG	308KG	310KG	5313
	Bearing centers	5-11/16	7-11/16	7-11/16	9-5/8
	Bearing type	Ball	Ball	Ball	Ball
	Min. B_{10} bearing life under maximum load	3 years	3 years	3 years	3 years
Sleeve	Packing size 360A Series	3/8	3/8	3/8	7/16
	Outside diameter of sleeve 360A Series	1-1/2	1-7/8	1-7/8	2-1/2
	Outside diameter of sleeve 340A Series	1-1/8	1-1/2	1-1/2	N/A

340A Series

Sealing Method	Temperature °F Close Coupled	Frame Mounted
Standard Mechanical Seal	225	225

360A Series

Sealing Method	Temperature °F Close Coupled	Frame Mounted
Standard Mechanical Seal	225	225
Mechanical Seal with Water Jacket*	300	300
Standard Packing	225	225
Packing with Water Jacket*	275	275

Packing . . . Suction lift requires lantern ring
*7, 9 and 12 bore pumps only

340A/360A Series Case Working Pressure (all or any part can be suction pressure) – 175 psi

Hydrostatic Test Pressure – 265 psi

Limitations 340A/360A Series – hp

Speed–RPM	3500	3500	1750	1150
Close Coupled	O.D.P.	60	50	30
	T.E. & EX. PR.	50	50	30
Power Frame	1	40	20	15
	2 & 3	125	75	40
	21	N/A	250	150

Power Frame Construction

Pump Size	Model 344A				Model 364A					
	3500 RPM	2880 RPM	1750/1440 RPM	1150/960 RPM	3500 RPM	3000 RPM	1750/1440 RPM		1150/960RPM	
					ENC.	ENC.	ENC.	SEMI.	ENC.	SEMI.
1-1/4 x 1-1/2 x 7	1	1	1	*	1	1	1	1	*	*
1-1/4x1-1/2x9B	*	*	1	*	*	*	1	*	*	*
1-1/2 x 2 x 7	1	1	1	*	1	1	1	1	*	*
1-1/2 x 2 x 9A	*	*	1	*	*	*	1	2	*	1
1-1/2 x 2 x 9B	*	*	1	*	*	*	1	*	*	*
1-1/2 x 2 x 9C	2	2	1	*	2	2	1	*	*	*
1-1/2 x 2 x 11	3	3	2	2	*	*	2	*	2	*
1-1/2 x 2 x 12	*	*	2	2	*	*	2	3	2	2
2 x 2-1/2 x 7A	2	2	1	*	2	2	1	1	*	*
2 x 2-1/2 x 7B	1	1	1	*	1	1	1	*	*	*
2 x 2-1/2 x 9	3	3	1	*	3	3	1	*	*	*
2 x 2-1/2 x 12	*	*	2	2	*	*	2	*	2	*
2 x 3 x 11	*	3	2	2	*	*	2	*	2	*
2-1/2 x 3 x 7A	1	1	1	*	2	2	1	1	*	*
2-1/2 x 3 x 7B	2	2	1	*	2	2	1	*	*	*
2-1/2 x 3 x 9	3	3	1	*	3	3	2	2	*	2
2-1/2 x 3 x 12	*	*	2	2	*	*	3	3	2	2
3 x 4 x 9A	3	3	1	*	3	3	2	*	*	*
3 x 4 x 9B	3	3	1	*	3	3	2	*	*	*
3 x 4 x 11	*	3	2	2	*	*	2	*	2	*
3 x 4 x 12	*	*	3	2	*	*	3	3	2	2
4 x 4 x 7A	2	2	1	*	2	2	1	*	*	*
4 x 4 x 7B	2	2	1	*	2	2	1	1	*	*
4 x 5 x 9A	3	3	2	*	3	3	2	*	*	*
4 x 5 x 9B	*	*	2	*	*	*	2	2	*	2
4 x 5 x 11	*	3	2	2	*	*	3	*	2	*
4 x 5 x 12	*	*	3	2	*	*	3	3	2	2
5 x 6 x11	*	3	3	2	*	*	3	*	2	*
5 x 6 x 12	*	*	3	2	*	*	3	3	3	2
6 x 6 x 9	*	*	2	2	*	*	2	2	2	2
6 x 6 x 11	*	3	3	2	*	*	3	*	2	*
6 x 6 x 11A	*	*	3	2	*	*	3	*	2	*
6 x 6 x 12B	*	*	3	3	*	*	3	*	3	*
6 x 8 x 15	*	*	*	*	*	*	21	*	21	*
8 x 10 x 15	*	*	*	*	*	*	21	*	21	*

* = Not Available

ENC. = Enclosed Impeller

SEMI. = Semiopen Impeller (Optional)

Engineering & Dimension Details

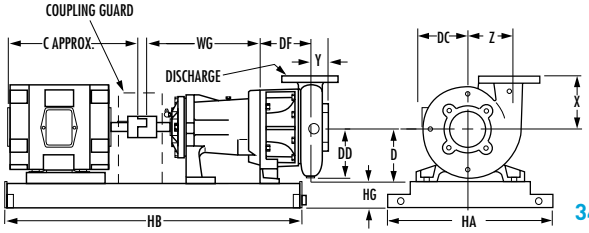

340A SERIES

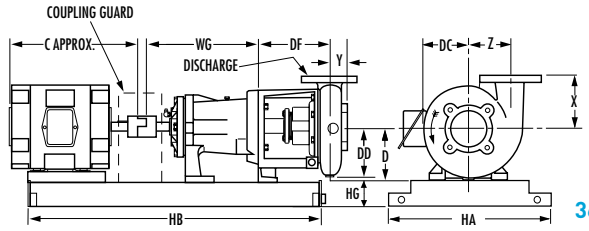

360A SERIES

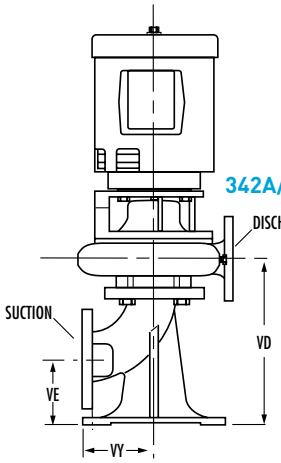

342A/362A SERIES

Pumps with Threaded Connections						340A Series			360A Series		342A/362A		
						DF			DF		Vertical Pumps		
Pump Size**	X	Y	Z	DC	DD	Frame 1 143JM-215JM	Frame 2 or 3 254JM-256JM	Frame 2 or 3 284JM-326JM	Frame 1 143JP-184JP	Frame 2, 3 or 21 213JP-325JP	VD	VE	VY
1-1/4 x 1-1/2 x 7	5-1/4	2-7/16	4-3/16	4-15/16	5-3/16	4-3/4	N/A	N/A	7-13/16	N/A	9-3/8	3-3/4	4
1-1/4 x 1-1/2 x 9B	6-3/8	2-9/16	5-3/8	6-3/16	6-3/8	4-11/16	N/A	N/A	7-3/4	N/A	9-3/8	3-3/4	4
1-1/2 x 2 x 7	5-3/8	2-1/2	4-5/16	5-1/8	5-3/8	4-13/16	N/A	N/A	7-7/8	N/A	10-5/16	4-1/8	4-1/2
1-1/2 x 2 x 9	6-3/4	2-5/8	5-1/2	6-5/16	6-9/16	4-3/4	5-3/4	5-3/4	7-13/16	8-5/8	10-5/16	4-1/8	4-1/2
1-1/2 x 2 x 11	9	2-13/16	6-1/8	7-1/16	7-1/4	N/A	5-3/4	5-3/4	N/A	8-5/8	10-1/2	4-1/8	4-1/2
1-1/2 x 2 x 12	7-3/4	2-3/4	7-1/16	8	8-1/4	N/A	5-7/8	N/A	N/A	8-3/4	10-7/16	4-1/8	4-1/2
Pumps with Ansi Standard 125 Lb. Flanged Connections													
2 x 2-1/2 x 7	5-5/8	1-7/8	4-9/16	5-3/8	5-13/16	4-15/16	5-15/16	N/A	8	8-13/16	11-7/16	4-1/2	5
2 x 2-1/2 x 9	7	1-7/8	5-11/16	6-1/2	6-7/8	4-7/8	5-7/8	5-7/8	7-15/16	8-3/4	11-7/16	4-1/2	5
2 x 2-1/2 x 12	8	1-7/8	7-3/16	8-3/16	8-1/2	5	6	N/A	N/A	8-7/8	11-7/16	4-1/2	5
2 x 3 x 11	8	2-3/8	6-1/2	7	7-3/8	5-1/8	6-1/8	N/A	N/A	8-5/8	12-7/8	5	5-1/2
2-1/2 x 3 x 7	5-7/8	2	4-13/16	5-13/16	6-1/4	5-1/16	6-1/16	N/A	8-1/8	8-15/16	12-9/16	5	5-1/2
2-1/2 x 3 x 9	7-1/4	2	5-15/16	6-3/4	7-1/4	5	6	6	8-1/16	8-7/8	12-9/16	5	5-1/2
2-1/2 x 3 x 12	8-1/4	2	7-3/8	8-3/8	8-3/4	5-1/8	6-1/8	N/A	N/A	9	12-9/16	5	5-1/2
3 x 4 x 9	7-1/2	2-1/8	6-1/8	6-7/8	7-7/16	5-1/8	6-1/8	6-1/8	8-3/16	9	14-11/16	6	6-1/2
3 x 4 x 11	9	2-3/4	7	7-9/16	8-3/16	5-7/16	6-7/16	N/A	N/A	9-1/8	15-1/4	6	6-1/2
3 x 4 x 12	8-1/2	2-1/8	7-9/16	8-7/16	8-15/16	5-1/2	6-1/2	6-1/2	N/A	9-1/8	14-11/16	6	6-1/2
4 x 4 x 7	6-1/2	2-1/2	5/1-2	6-7/16	7-5/16	5-7/16	6-7/16	6-7/16	8-1/2	9-5/16	14-15/16	6	6-1/2
4 x 5 x 9A	7-1/4	3-1/8	5-3/4	6-11/16	7-3/8	5-1/4	6-1/4	6-1/4	N/A	9-1/8	17-3/16	6-1/2	7-1/2
4 x 5 x 9B	7-3/4	2-5/8	6-5/8	8-1/16	8-11/16	5-3/8	6-3/8	N/A	N/A	9-1/4	16-11/16	6-1/2	7-1/2
4 x 5 x 11	9	3	7-1/4	7-15/16	8-11/16	5-5/8	6-5/8	6-5/8	N/A	9-1/4	17	6-1/2	7-1/2
4 x 5 x 12	8-3/4	2-5/8	7-15/16	8-7/8	9-9/16	N/A	6-3/4	6-3/4	N/A	9-3/8	16-11/16	6-1/2	7-1/2
5 x 6 x 11	9	3-1/8	8-1/16	8-11/16	10-1/8	6	7	7	N/A	9-5/8	18-1/8	7	8
5 x 6 x 12	9	2-7/8	8-5/16	9-1/4	10-1/8	N/A	7	7	N/A	9-5/8	17-7//8	7	8
6 x 6 x 9	8-1/4	2-3/4	7	8	9	5-1/2	6-1/2	6-1/2	N/A	9-3/8	17-13/16	7	8
6 x 6 x 11	9-1/4	3-1/8	8-11/16	9-11/16	10-13/16	N/A	7-1/4	7-1/4	N/A	9-7/8	18-1/4	7	8
6 x 6 x 11A	9-1/4	3-1/8	8-11/16	9-11/16	10-13/16	N/A	7-1/4	7-1/4	N/A	9-7/8	18-1/4	7	8
6 x 6 x 12	9-1/4	3-1/8	8-11/16	9-11/16	10-13/16	N/A	7-1/4	7-1/4	N/A	9-7/8	18-1/4	7	8
6 x 8 x 15	18	6	—	10-7/16	14-1/2	N/A	N/A	N/A	N/A	10-3/16*	N/A	N/A	N/A
8 x 10 x 15	19	6	—	11	14-1/2	N/A	N/A	N/A	N/A	10-5/16*	N/A	N/A	N/A

* Power Frame 21 Only ** Applies to all impeller revisions except where revision letter is stated

340A SERIES Engineering & Dimension Details

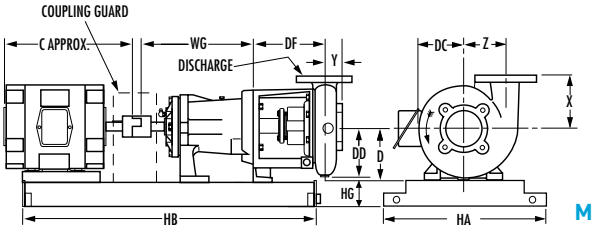

MODEL 344A

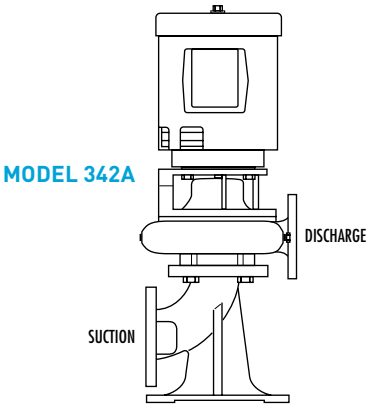

MODEL 342A

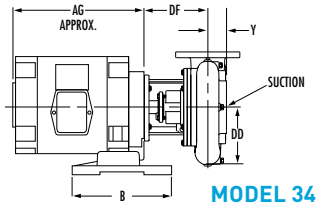

MODEL 341A

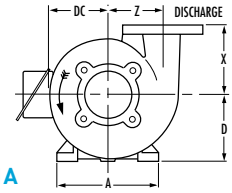

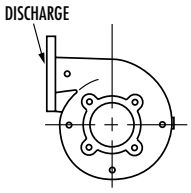

STANDARD POSITION (1)

Pump Model	Base Number	Weight Lbs.	HA_1	HB	HG
344A	4	49	17-1/4	30-1/2	3
	5	59	17-1/4	36-1/2	3
	7	82	20-1/2	36-1/2	3
	8	96	20-1/2	42-1/2	3
	11	164	26-3/4	46-1/2	4
	15	291	30-3/4	54-1/2	4-1/2

Power Frame			1	2	3
Weight in Pounds			36	82	87
D	Case Bore	7	5-1/4	6-1/4	—
		9	6-1/4	7	7
		11	—	7	7
		12	—	7	7
WG			10-5/16	13-13/16	13-13/16

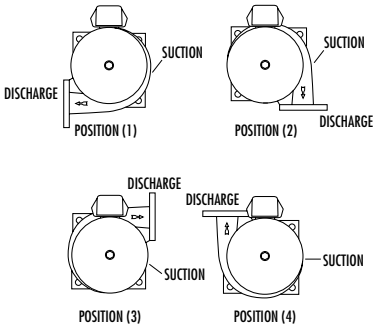

Pump Model	Motor Frame	Horsepower 3500 RPM	Horsepower 1750 RPM	Horsepower 1150 RPM	Mtr. Wgt. Lbs.	D	Pump Model 341A A	B	AG	C	Base Number		
344A	56	—	1/2-3/4	—	50	5-1/4	—	—	—	12	4	N/A	N/A
341A 342A & 344A	143T	1-1/2	1	3/4	30	5-1/4	9-3/4	8-5/8	10	12	4	N/A	N/A
	145T	2-3	1-1/2-2	1	35	5-1/4	9-3/4	8-5/8	11	13	4	7	N/A
	182T	5	3	1-1/2	45	5-1/4	9-3/4	8-5/8	11	13	4	7	N/A
	184T	7-1/2	5	2	50	5-1/4	9-3/4	8-5/8	12	14	4	7	N/A
	213T	10	7-1/2	3	120	5-1/4	10-1/2	7-1/2	14	16	4	7	N/A
	215T	15	10	5	144	5-1/4	10-1/2	9	15	18	5	7	N/A
	254T	20	15	7-1/2	217	6-1/4	12-1/2	10-3/4	17	21	7	8	8
	256T	25	20	10	246	6-1/4	12-1/2	12-1/2	19	23	N/A	8	8
	284T	—	25	15	320	7	13-3/4	11-1/2	19	24	N/A	8	8
	284TS	30	—	—	320	7	13-3/4	11-1/2	19	22	N/A	8	8
	286T	—	30	20	351	7	13-3/4	13	21	25	N/A	8	8
	286TS	40	—	—	351	7	13-3/4	13	21	24	N/A	8	8
	324T	—	40	25	442	8	16	14	22	26	N/A	11	11
	324TS	50	—	—	442	8	16	14	22	25	N/A	11	11
	326T	—	50	30	485	8	16	15-1/2	23	28	N/A	11	11
	326TS	60	—	—	485	8	16	15-1/2	23	26	N/A	11	11
344A	364T	—	—	40	540	9	18	15-1/2	23	29	N/A	11	11
	364TS	75	60	—	540	9	18	15-1/2	23	27	N/A	11	11
	365TS	100	75	—	590	9	18	15-1/2	24	28	N/A	11	11
	404TS	125	100	—	690	10	20	16-1/4	26	30	N/A	15	15

Notes:

1. Dimensions and weights are approximate.
2. All dimensions are in inches and may vary ±1/4" (6).
3. Frame sizes, "C" and "AG", dimension and motor weight are for open drip-proof motors only.
4. Conduit box is shown in approximate position. Dimensions are not specified as they vary with each motor manufacturer.
5. Not for construction purposes unless certified.
6. Discharge positions No. 2 and 3 are not available on Models 341A and 344A. Position No. 1 is furnished as standard unless otherwise specified.
7. When two "D" dimensions are indicated, always use the larger figure.
8. Power frame selection for 344A pumps can be made from the range charts.
9. Models 341A and 342A have "JM" motor frames. Model 344A has "T" frame motor.

360A SERIES Engineering & Dimension Details

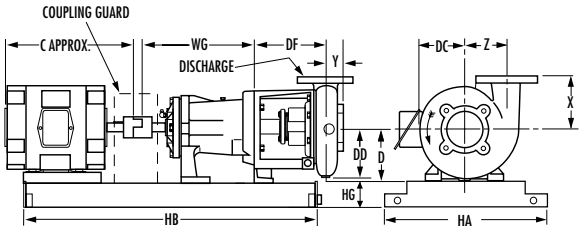

MODEL 364A

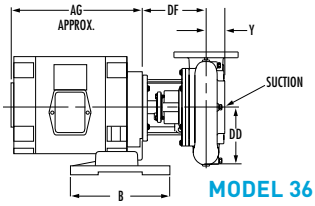

MODEL 361A

STANDARD POSITION (1)

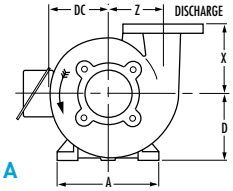

Pump Model	Base Number	Weight Lbs.	HA_1	HB	HG
364A	4	49	17-1/4	30-1/2	3
	5	59	17-1/4	36-1/2	3
	7	82	20-1/2	36-1/2	3
	8	96	20-1/2	42-1/2	3
	9	164	26-3/4	46-1/2	4
	11	291	30-3/4	54-1/2	4-1/2
	15	291	30-3/4	54-1/2	4-1/2
	16	345	30-3/4	64-1/2	4-1/2
	17	399	30-3/4	74-1/2	4-1/2

Power Frame			1	2	3	21
Weight in Pounds			36	82	87	163
D	Case Bore	7	5-1/4	6-1/4	—	—
		9	6-1/4	7	7	
		11	—	7	7	
		12	—	7	7	
		15	—	—	—	14-1/2
WG			10-5/16	13-13/16	13-13/16	13-13/16

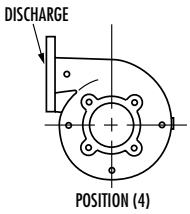

Pump Model	Motor Frame	Horsepower 3500 RPM	Horsepower 1750 RPM	Horsepower 1150 RPM	Mtr. Wgt. Lbs.	D	Pump Model 361A A	Pump Model 361A B	Pump Model 361A AG	C	Base Number			
364A	56	—	1/2-3/4	—	50	5-1/4	—	—	—	12	4	N/A	N/A	N/A
361A, 362A & 364A	143T	1-1/2	1	3/4	30	5-1/4	9-3/4	8-5/8	10	12	4	N/A	N/A	N/A
	145T	2-3	1-1/2-2	1	35	5-1/4	9-3/4	8-5/8	11	13	4	7	N/A	N/A
	182T	5	3	1-1/2	45	5-1/4	9-3/4	8-5/8	11	13	4	7	N/A	N/A
	184T	7-1/2	5	2	50	5-1/4	9-3/4	8-5/8	12	14	4	7	N/A	N/A
	213T	10	7-1/2	3	120	5-1/4	10-1/2	7-1/2	14	16	4	7	7	N/A
	215T	15	10	5	144	5-1/4	10-1/2	9	15	18	5	7	7	N/A
	254T	20	15	7-1/2	217	6-1/4	12-1/2	10-3/4	17	21	N/A	8	8	N/A
	256T	25	20	10	246	6-1/4	12-1/2	12-1/2	19	23	N/A	8	8	N/A
	284T	—	25	15	320	7	13-3/4	11-1/2	19	24	N/A	8	8	N/A
	284TS	30	—	—	320	7	13-3/4	11-1/2	19	22	N/A	8	8	N/A
	286T	—	30	20	351	7	13-3/4	13	21	25	N/A	9	9	16
	286TS	40	—	—	351	7	13-3/4	13	21	24	N/A	8	8	N/A
	324T	—	40	25	442	8	16	14	22	26	N/A	11	11	16
	324TS	50	—	—	442	8	16	14	22	25	N/A	11	11	N/A
	326T	—	50	30	485	8	16	15-1/2	23	28	N/A	11	11	16
	326TS	60	—	—	485	8	16	15-1/2	23	26	N/A	11	11	N/A
364A	364T	—	—	40	540	9	18	15-1/2	23	29	N/A	12	12	16
	364TS	75	60	—	540	9	18	15-1/2	23	27	N/A	11	11	16
	365T	—	—	50	590	9	18	15-1/2	24	28	N/A	N/A	N/A	16
	365TS	100	75	—	590	9	18	15-1/2	24	28	N/A	11	11	16
	404T	—	100	60	690	10	20	16-1/4	26	33	N/A	N/A	N/A	17
	404TS	125	100	—	690	10	20	16-1/4	26	30	N/A	15	15	17
	405T	—	—	75	780	10	20	17-3/4	27	34	N/A	N/A	N/A	17
	405TS	—	125	—	780	10	20	17-3/4	27	31	N/A	N/A	N/A	17
	444TS	—	150	—	950	11	22	18-1/2	30	34	N/A	N/A	N/A	17
	445TS	—	200	—	1000	11	22	20-1/2	32	36	N/A	N/A	N/A	17

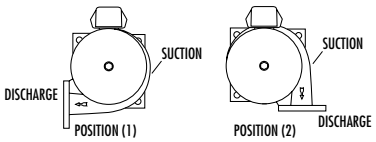

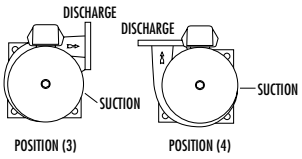

MODEL 362A

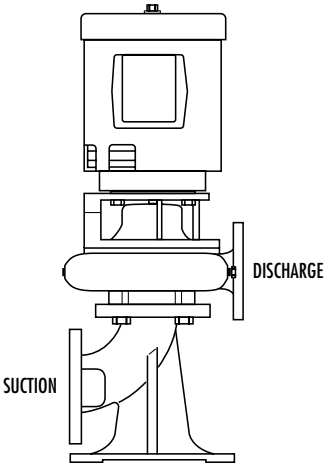

Notes:

1. Dimensions and weights are approximate.
2. All dimensions are in inches and may vary ±1/4" (6).
3. Frame sizes, "C" and "AG", dimension and motor weight are for open drip-proof motors only.
4. Conduit box is shown in approximate position. Dimensions are not specified as they vary with each motor manufacturer.
5. Not for construction purposes unless certified.
6. Discharge positions No. 2 and 3 are not available on Models 361A and 364A. Position No. 1 is furnished as standard unless otherwise specified.
7. When two "D" dimensions are indicated, always use the larger figure.
8. Power frame selection for 364A pumps can be made from the range charts.
9. Models 361A and 362A have "JP" motor frames. Model 364A has "T" frame motor.

Engineering Specifications

Flexible-Close Coupled Pumps

The contractor shall furnish (and install as shown on the plans) Aurora® Model (341A horizontal close coupled) (342A vertical close coupled) (344A horizontal flexible coupled) back pullout centrifugal pumps size _____x_____x_____ of (standard fitted) (bronze fitted) (all iron) construction.

The contractor shall furnish (and install as shown on the plans) Aurora Model (361A horizontal close coupled) (362A vertical close coupled) (364A horizontal flexible coupled) back pullout centrifugal pumps size _____x_____x_____ of (bronze fitted) (all bronze) (all iron) (stainless steel) construction. Each pump is to be furnished with a (standard) (water cooled) stuffing box with (packing) (_____) (see options).

Each pump shall have a capacity of _____GPM at _____ft. total head, with a temperature of _____°F, _____specific gravity. Each pump is to be furnished with a mechanical seal with all metal parts to be 303 stainless steel with Buna-N elastomers, ceramic seat and carbon washer. The unit must be equipped with (bronze) (stainless steel) keylocked shaft sleeve that extends the length of the seal box. The pump shaft extension shall be O-ring sealed from the pumped liquid. Pump shall have a case wearing ring (impeller wearing rings). Impellers to be vacuum cast, dynamically balanced and keylocked to the shaft.

Flexible Coupled–Frame Mounted (Models 344A–364A)

Pump and motor are to be mounted on a common (fabricated steel drip rim) (steel) baseplate. The shaft is to be steel, installed in a cast iron power frame. Pumps shall have a shaft design for .002" deflection at the seal face with the pump running under maximum load condition. (Grease) (oil) (permanently lubricated) ball bearings, having a 3 year minimum life (AFBMA B10) under the maximum condition of load. Bearings to be protected by separate oil seals and slingers. The pump shall be flexible coupled to a standard horizontal NEMA, _____hp, _____ phase, _____hertz, _____volt, _____RPM (open drip-proof) (totally enclosed fan cooled) (hazardous location) motor. Alignment shall be checked in accordance with the standards of the Hydraulic Institute after installation, and there shall be no strain transmitted to the pumps.

Close Coupled (Models 341A–361A) (Models 342A–362A)

Each pump is to be close coupled to a standard HI-NEMA-JM (340A Series) JP (360A Series). _____hp, _____ phase, _____hertz, _____volt, _____RPM (drip-proof) (totally enclosed) (hazardous location) motor. Models 341A and 361A in motor frame sizes up to 184JM shall be supported by a separate support foot on the close coupled pump bracket.

800 AIRPORT ROAD, NORTH AURORA, ILLINOIS 60542 www.AuroraPump.com

Viton® is a registered trademark of DuPont Performance Elastomers L.L.C.
Aurora® is a registered trademark of Pentair Ltd.
Because we are continuously improving our products and services, Pentair reserves the right to change specifications without prior notice.
A-02-1012 (01/31/14) © 2014 Pentair Ltd. All Rights Reserved.

PENTAIR

AURORA®

FRAME MOUNTED

INSTRUCTION AND INSTALLATION MANUAL

NOTE! To the installer: Please make sure you provide this manual to the owner of the equipment or to the responsible party who maintains the system.

Part # A-03-247 | © 2012 Pentair Ltd. | 11/27/12

THIS PAGE INTENTIONALLY LEFT BLANK

CALIFORNIA PROPOSITION 65 WARNING:

Warning: This product and related accessories contain chemicals known to the State of California to cause cancer, birth defects or other reproductive harm.

GENERAL. The life of your Aurora pump can be extended considerably by carefully following the installation instructions contained herein. Each step of the pump installation instructions plays a vital part in assuring long life, efficient operation, and reduced maintenance, from the initial location of the pump through prestarting directions.

UNPACKING YOUR PUMP. The crate containing your pump should be opened immediately upon receipt from the factory, and the pump generally inspected for damage and shortage of parts. Particular attention should be given to the discharge and suction nozzle threads or flanges. Any damage or shortage of parts should be reported to the carrier immediately.

CLEANING. If your pump is to be installed immediately, it will be necessary to remove the protective covers from all openings, and to clean the exposed metal parts thoroughly with white gasoline or other suitable solvent to remove the preservative coating.

STORAGE. If your pump is not to be put in service immediately it should be covered and stored in a clean dry area. The protective covers and preservative should be left intact until the pump is put into service. For extended storage, the pump should be dried internally with hot air or some other suitable means, and once free of moisture, filled with a protective fluid such as light oil or kerosene. Accordingly, at time of installation, the pump will have to be completely dismantled and thoroughly cleaned.

PLANNING THE PUMP LOCATION. You probably have spent considerable time planning where your pump will be located. However you may have overlooked some factor which may affect your pump operation or efficiency.

The pump should be located as close to the liquid source as possible so that the suction line can be

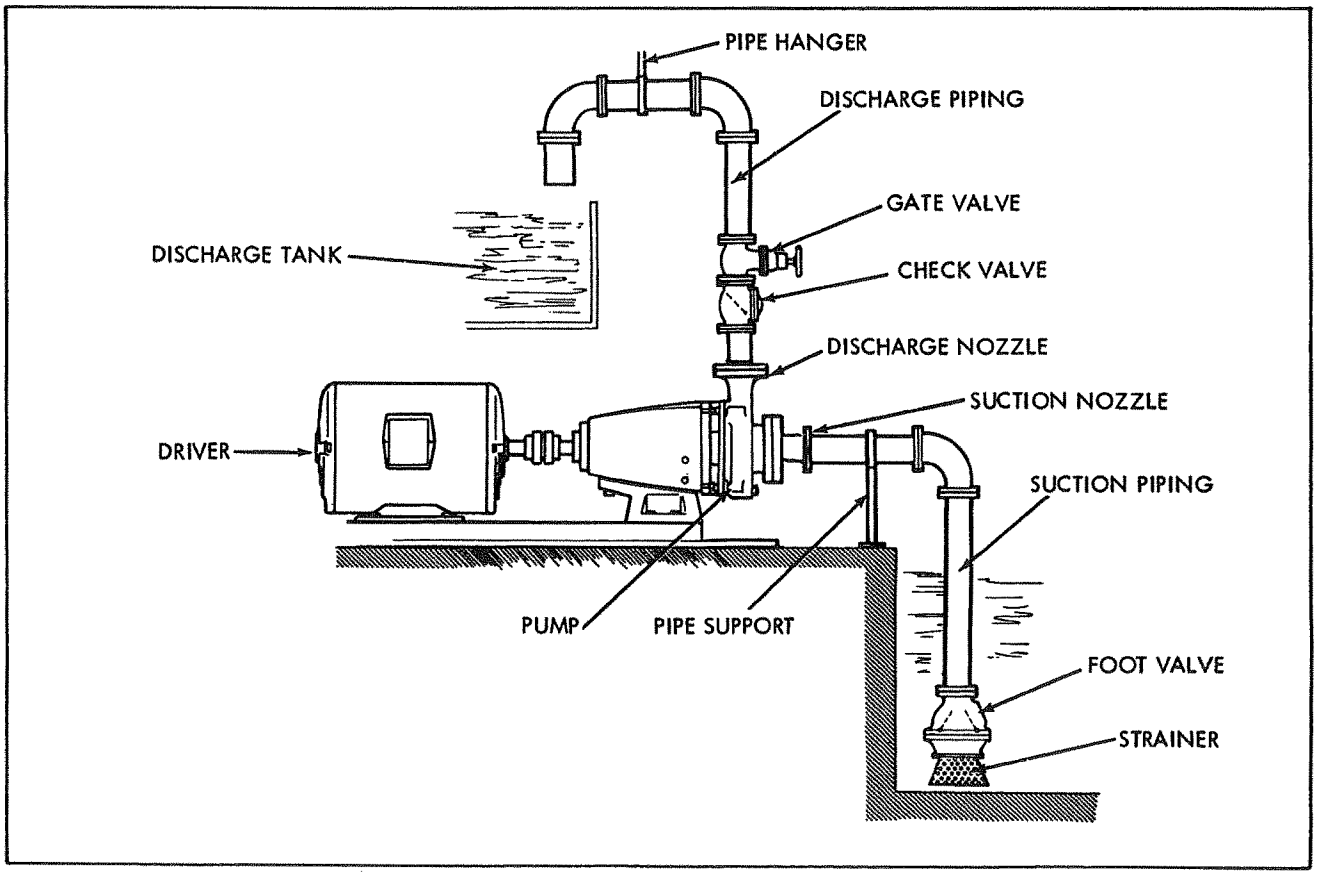

FIGURE 1. RECOMMENDED LOCATION - SHORT DIRECT SUCTION

short and direct. It should be located in a clean, open area, where it is easily accessible for inspection, lubrication, and repair. Pumps installed in dark, dirty areas or in cramped locations are often neglected which can result in premature failure of both the pump and the driver.

Your pump should be located so that a hoist or crane can be used to move it without interference from piping. This factor is often overlooked in the advance planning stage.

Protect your pump against the possibility of flooding. Although water will not seriously damage the pump, the drive motor can be damaged.

The pump should be located in an area where moisture, either from leakage through the packing or from condensation, can be adequately drained off. Moisture dripping on exposed metal or wood can cause rapid deterioration of the area. Also, wet floors produce safety hazards.

Adequate provisions should be made for electrical wiring to the pump motor. A switch and overload protection should be installed near the pump unless it is impractical. The electrical conduit should be positioned in such a way as to preclude the possibility of moisture entering the conduit or the motor and causing short circuits.

Outdoor installation will normally provide all of the above mentioned conditions. However it is advisable to provide a weather shelter for your pump.

FOUNDATION. The foundation for your pump must be sufficiently rigid to absorb any vibration and stress encountered during pump operation. A raised foundation of concrete is preferable for most floor mounted pumps. The raised foundation assures a satisfactory base, protects against flooding, simplifies moisture drainage, and facilitates keeping the area clean.

Your pump should be firmly bolted to the foundation, whether it is a raised concrete base, steelwork wall, or structural member. The mounting bolts or studs should be accurately located per the applicable Aurora dimension sheet. Foundation bolts should be enclosed by a sleeve 2 to 4 diameters larger than the bolt to allow movement for proper alignment with the pump mounting holes. Refer to figure 3.

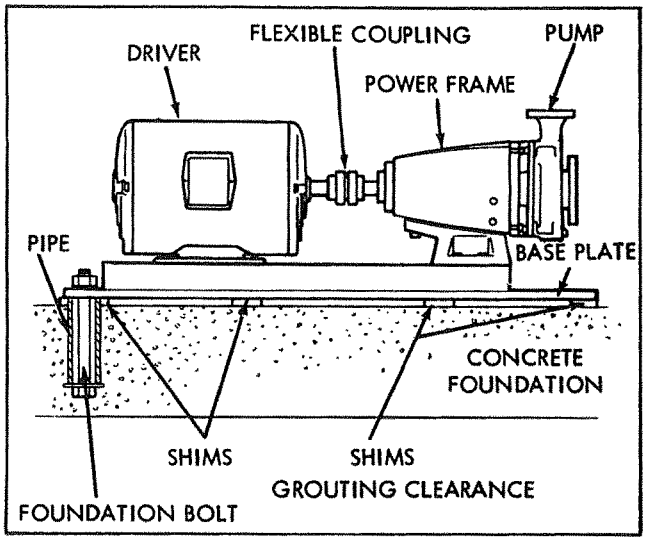

FIGURE 3. FOUNDATION FOR FRAME MOUNTED PUMPS

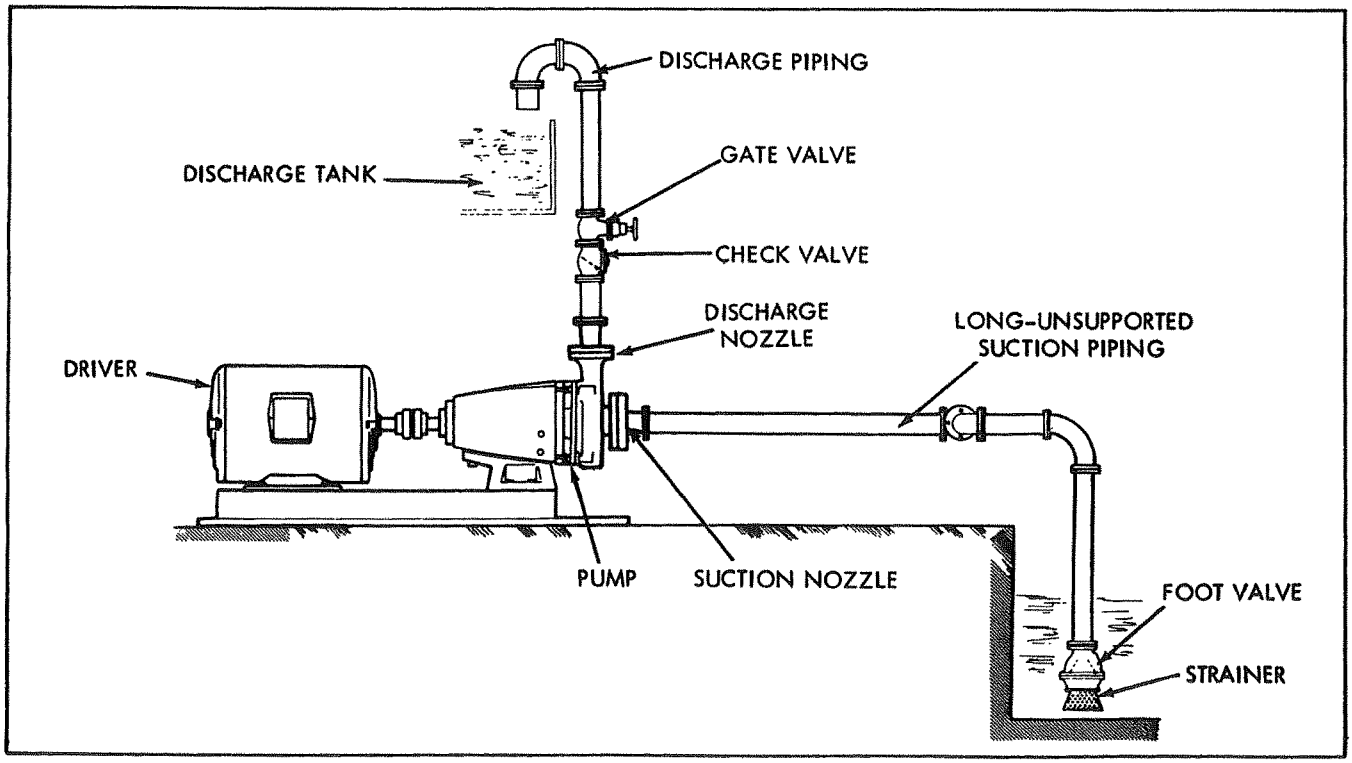

FIGURE 2. UNSATISFACTORY LOCATION - LONG INDIRECT SUCTION WITH NO SUPPORT

FRAME MOUNTED INSTALLATION

If the pump is to be mounted on steelwork or other structure, adequate support should be provided to prevent distortion of the base plate or the structure, which could produce excessive strain on the pump casing and piping, and seriously affect alignment of the pump and driver.

PREPARING TO INSTALL YOUR PUMP. Your pump and driver unit will normally be mounted on a common base plate. The unit has been accurately aligned and securely mounted to the base plate at the factory. However, the alignment cannot be maintained during shipping and the complete unit must be leveled and realigned at the time of installation.

LEVELING THE PUMP. Leveling the pump will require enough shims to support the base plate near the foundation bolts, and at any points of the base plate carrying a substantial weight load. The shims should be large enough to allow a gap of 3/4" to 1-1/2" between the base plate and foundation for grouting.

The pump unit should be set on the foundation, being careful not to damage the threads on the foundation bolts. The flexible coupling halves should then be disconnected. The shims should be inserted and the pump leveled. A spirit level should be used on the faces of the flexible coupling halves, and on the suction and discharge flanges. If your pump has threaded nozzles, a short piece of pipe inserted in the nozzles will serve as a smooth surface for a leveling reference point. The shims should be adjusted until the pump is leveled horizontally and vertically. Tighten the foundation bolts finger tight.

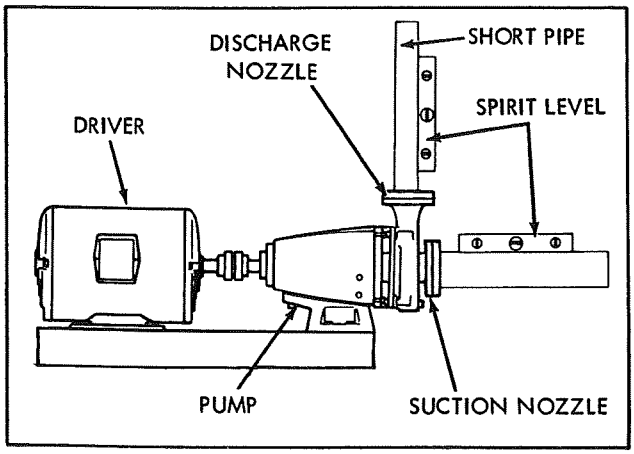

FIGURE 4. LEVELING PUMP UNIT WITH SPIRIT LEVEL AND SHORT LENGTHS OF PIPE

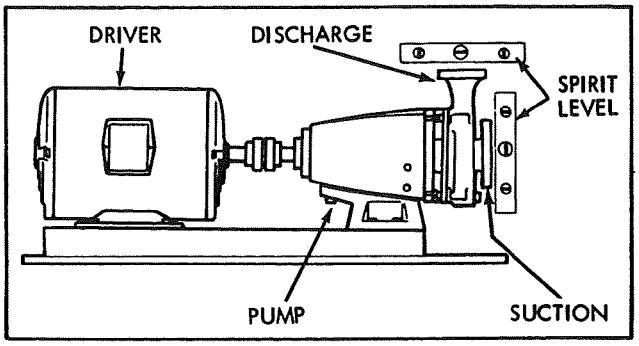

FIGURE 5. LEVELING PUMP UNIT WITH SPIRIT LEVEL ON PUMP FLANGES

INITIAL ALIGNMENT OF THE FLEXIBLE COUPLING. The pump and driver were accurately aligned at the factory. However, it is impossible to maintain this alignment during shipping and handling. Therefore it will be necessary for you to realign the pump and driver. Flexible couplings are not universal joints. They should not be used to compensate for misalignment of the pump and motor shafts. Their function is to transmit power from the driver to the pump while compensating for thermal expansion and shaft end movement. The coupling faces should be far enough apart so that they do not make contact when the motor shaft is forced to the limit of the bearing clearance toward the pump shaft.

In order to properly align the coupling, you will need a taper gauge or set of feeler gauges, and a straight edge, or if available, a dial indicator.

There are two types of misalignment encountered with flexible couplings: angular misalignment, in which the shafts are not parallel, and parallel misalignment where the shafts are parallel but not on the same axis.

To check angular alignment, insert a feeler gauge or taper gage at any four places 90° apart around the

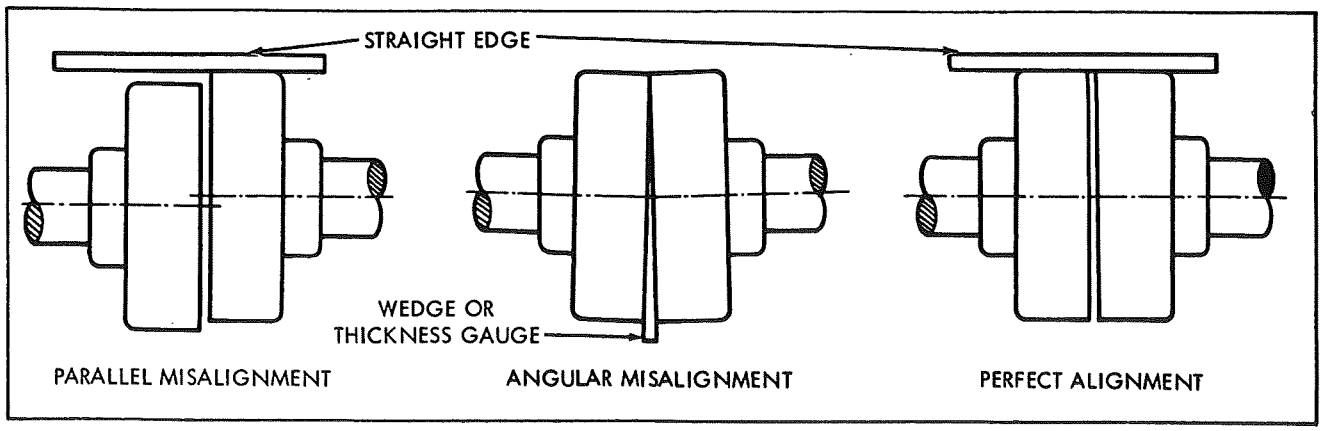

FIGURE 6. FLEXIBLE COUPLING ALIGNMENT

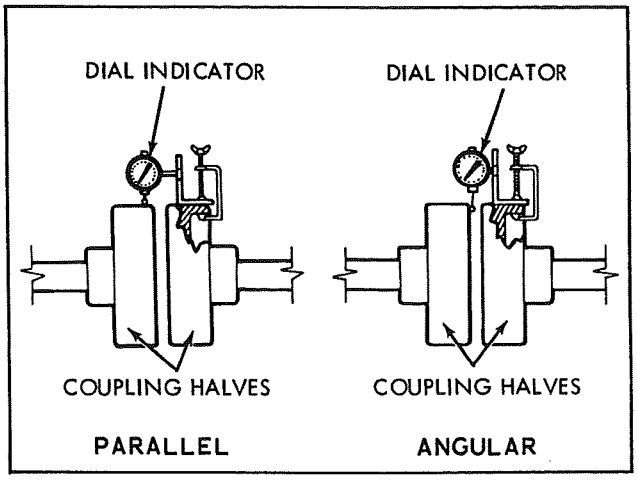

FIGURE 7. CHECKING ALIGNMENT WITH DIAL INDICATOR

coupling halves. Insert shims under the driver feet until the same reading is obtained at all four check points. The pump and driver will then be in angular alignment.

To check angular alignment with a dial indicator, clamp the dial indicator to the pump coupling half so that ball on the indicator just rests on the face of the motor coupling half. A chalk mark should be made at the point where the ball contacts the coupling half. Both the pump shaft and the motor shaft should be rotated an equal amount so that the reading is taken at all check points with the ball on the chalk mark. Insert shims as required.

To check parallel alignment, a straight edge should be held against the edges of the coupling halves at any four places 90° apart around the coupling. The straight edge should be parallel to the pump and driver shafts at all times. Insert shims until the straight edge lies flat against both coupling halves at all four check points. The pump and driver will then be in proper parallel alignment.

To check parallel alignment with the dial indicator, the ball should rest on periphery of the motor coupling half. A chalk mark should be made at the point of contact, and the shafts rotated equally so that the reading is taken with the ball on the chalk mark at all check points. Insert shims as required.

NOTE

Any adjustment to correct one direction of alignment may affect the other direction. Therefore, it is necessary to recheck both angular and parallel alignment after each adjustment.

When the unit is properly aligned, the foundation bolts should be tightened, but not too firmly. Waste material should be stuffed into the sleeves around the foundation bolts, to prevent grout from filling the sleeves during grouting.

GROUTING THE INSTALLATION. Grouting the base plate prevents lateral movement of the base plate, and improves the vibration absorbing characteristics of the foundation by increasing its mass. A wooden dam should be constructed around the base plate to contain the grout while it is being poured. The dam can be built tight against the base plate, or slightly removed from it as desired.

The entire base plate should be completely filled with grout. A non-shrinkable type grout, such as manufactured by EMBCO is recommended. The grout should be puddled frequently to remove any air bubbles from the grout.

The leveling shims can be grouted in place, or they can be removed after the grout has set usually from 48 to 72 hours after pouring.

After the grout has set, alignment of the unit should be checked and the foundation bolts firmly tightened down.

PIPING. Your pump unit is now ready to be piped. The piping practices you follow will directly affect the efficiency and power consumption of your pump.

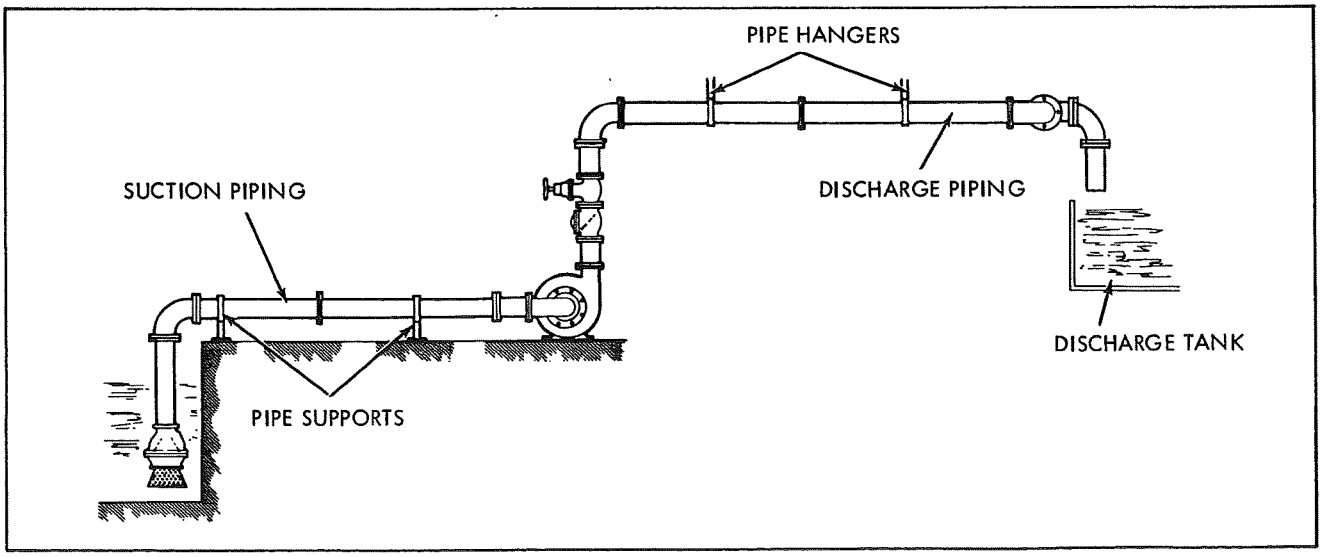

FIGURE 8. SUPPORTING PIPING

FRAME MOUNTED INSTALLATION

Pay particular attention to the seemingly insignificant details involved in piping your pump for they make the difference between a good and bad installation.

SUPPORTING THE PIPE. Both the suction and the discharge piping should be independently supported near the pump. Liberal use of pipe hangers and support blocks will prevent excessive strain on the pump casing and on the pipe joints.

SUCTION PIPING. The suction piping should be short, but no less than ten pipe diameters in length, and direct with as few elbows and fittings as possible, to keep head loss from friction at a minimum. However, the suction pipe should provide a minimum uninterrupted length, equal to ten pipe diameters, to the pump suction flange. A horizontal suction line should have a gradual rise to the pump, and pass under any interfering piping.

PIPE. The suction pipe diameter should be at least the same diameter as the suction nozzle on the pump, and preferably larger. Use of a smaller diameter pipe will result in loss of head due to friction. All joints must be tight to maintain prime on the pump.

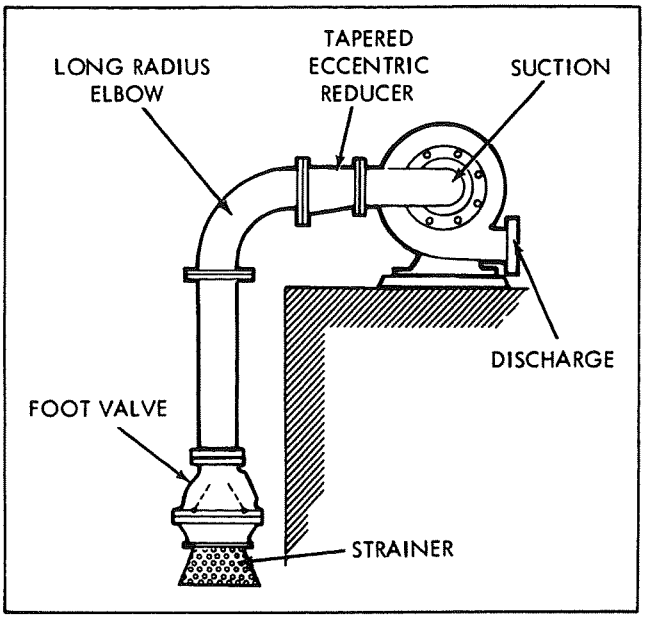

FIGURE 9. RECOMMENDED SUCTION LIFT PIPING - SHORT AND DIRECT

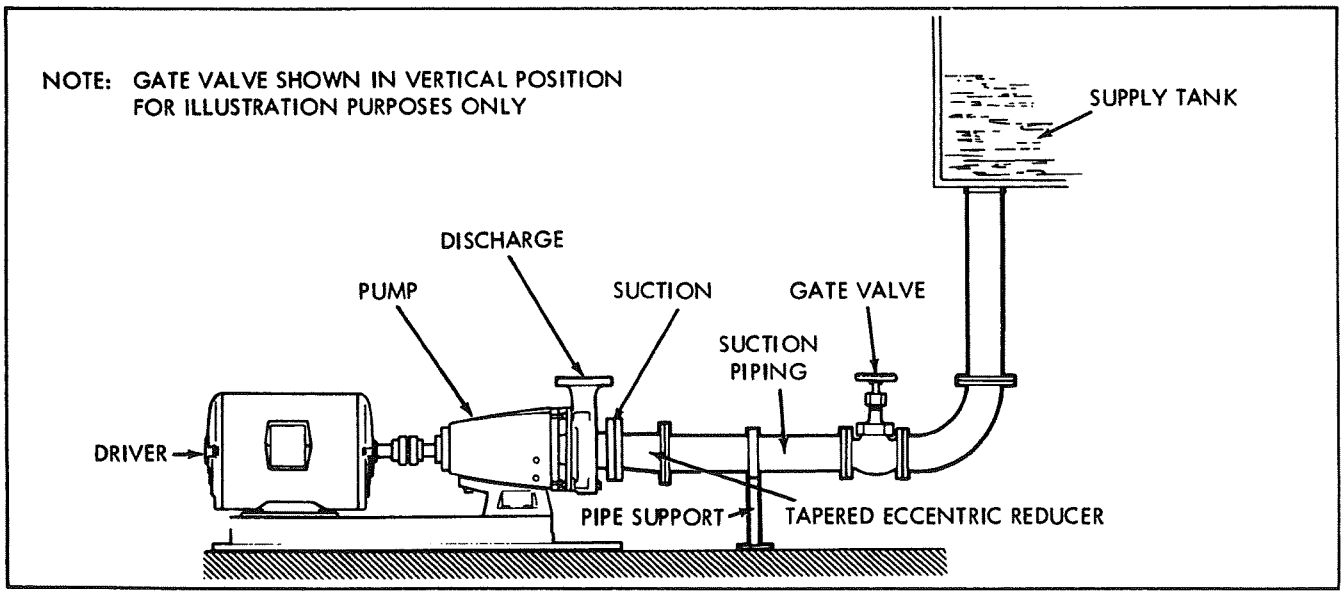

FIGURE 10. RECOMMENDED FLOODED SUCTION PIPING - SHORT AND DIRECT

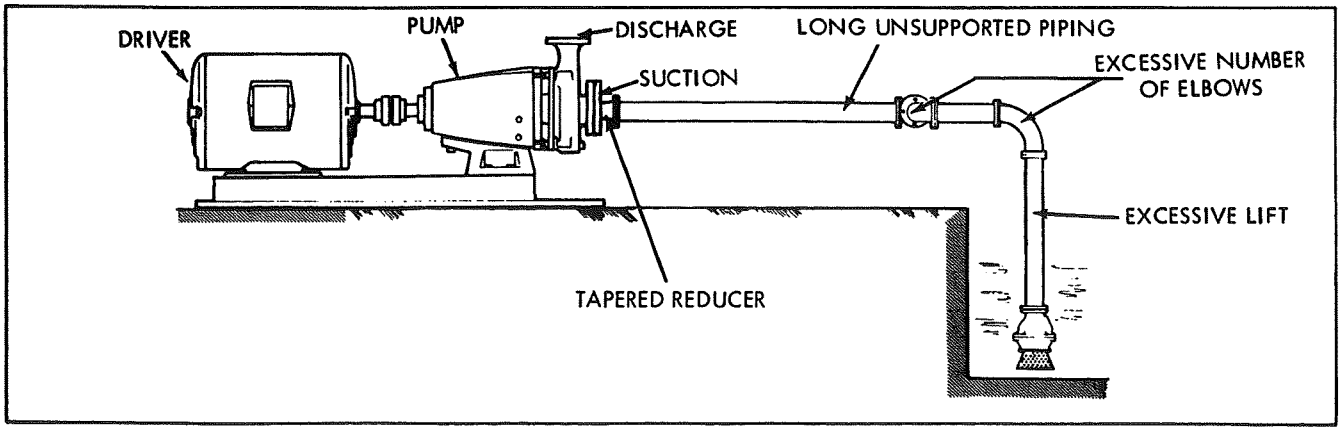

FIGURE 11. UNSATISFACTORY SUCTION LIFT PIPING - LONG AND INDIRECT WITH NO SUPPORT

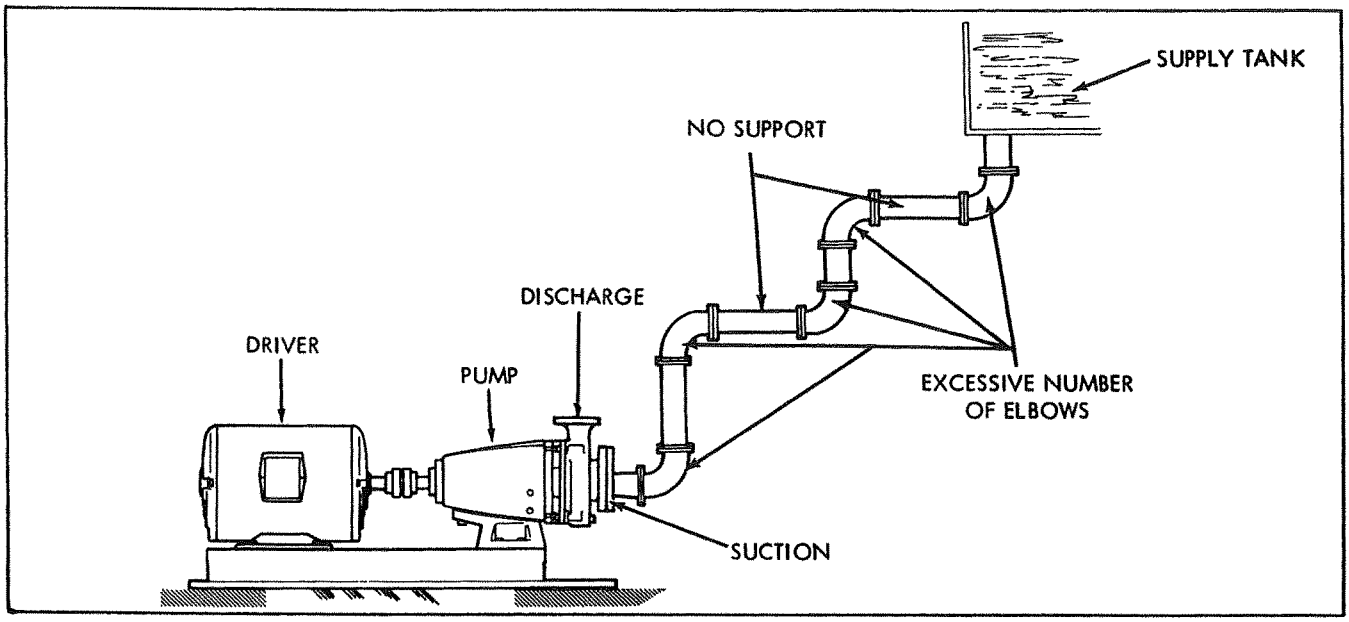

FIGURE 12. UNSATISFACTORY FLOODED SUCTION PIPING - LONG AND INDIRECT WITH NO SUPPORT

ELBOWS. Long radius elbows should be used in place of standard elbows wherever possible, because of their superior flow characteristics. For instance, head loss in a standard four inch elbow is equivalent to the head loss in a piece of pipe 11 feet long, while the head loss in a long radius elbow is approximately half as much. Elbows should not be used at the suction nozzle, but if it is unavoidable, they should be installed in a vertical position. Elbows installed in any position at the suction nozzle have a tendency to distribute the liquid unevenly in the impeller chamber, causing a reduction in capacity, and creating an undesirable thrust condition.

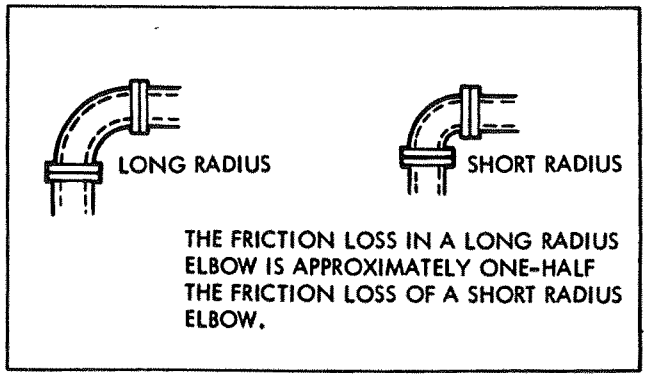

FIGURE 13. LONG VERSUS SHORT RADIUS ELBOWS

REDUCERS. Eccentric reducers should be installed directly at the suction nozzle, with the taper at the bottom to prevent air pockets from forming. Straight taper reducers should never be used in a horizontal suction line because of the air pocket that is formed at the leg of the reducer and the pipe.

DISCHARGE PIPING. Discharge piping should also be short and direct as possible, with few elbows and fittings, to reduce head loss from friction.

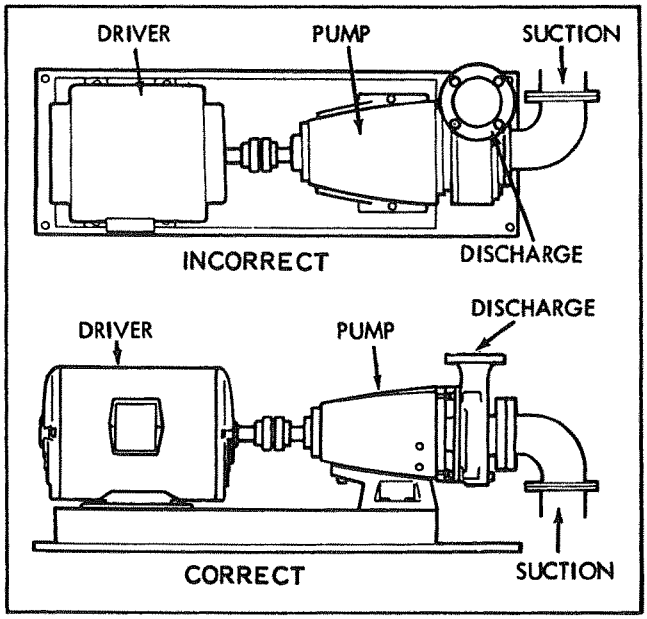

FIGURE 14. ELBOW INSTALLATION IN SUCTION NOZZLE

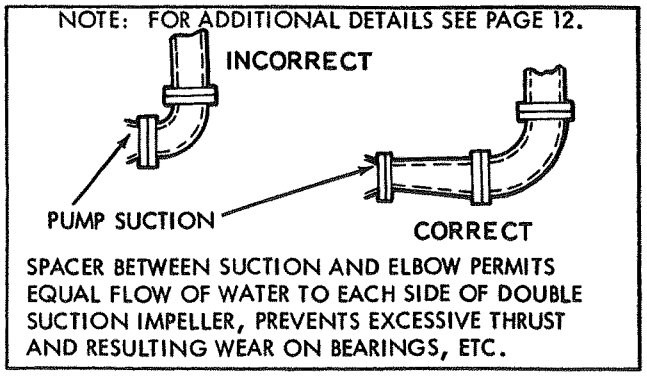

FIGURE 15. REDUCER BETWEEN ELBOW AND PUMP SUCTION NOZZLE

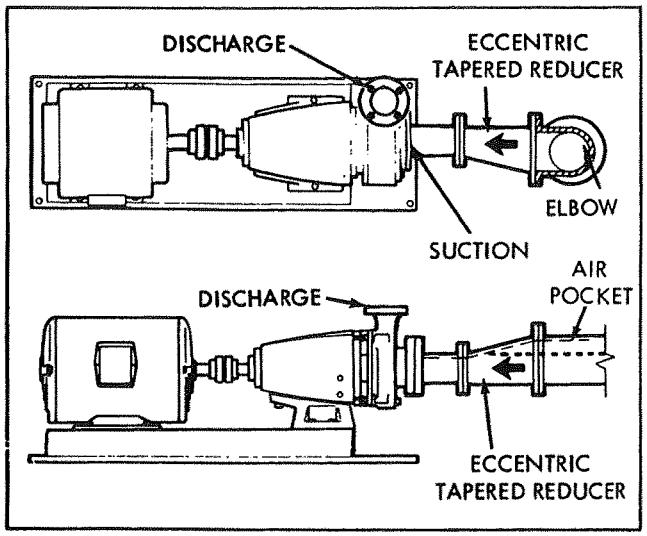

FIGURE 16. UNSATISFACTORY INSTALLATION OF TAPERED REDUCER

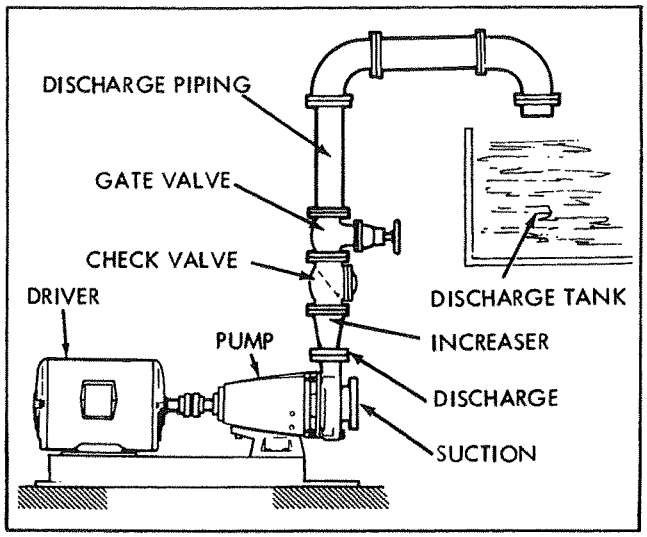

FIGURE 17. RECOMMENDED DISCHARGE PIPING - SHORT AND DIRECT

PIPE. The discharge pipe diameter should be the same as, or larger than, the discharge nozzle diameter. The size of discharge pipe to be used is dependent upon its application.

The recommended pipe diameter can be obtained from your nearest Aurora Pump Sales Office.

ELBOWS. Long radius elbows should be used in the discharge piping as well as in the suction piping to prevent excessive head loss due to friction. Whenever possible, elbows should not be installed directly at the discharge nozzle as the turbulence created by the elbow will affect pressure gauge readings.

REDUCERS AND INCREASERS. An increaser should be installed at the discharge nozzle if larger diameter

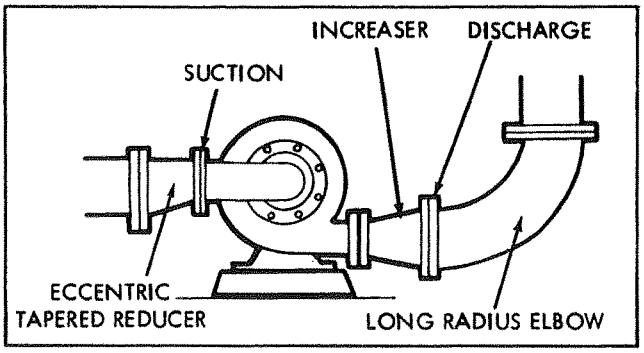

FIGURE 19. REDUCER AND INCREASER INSTALLATION

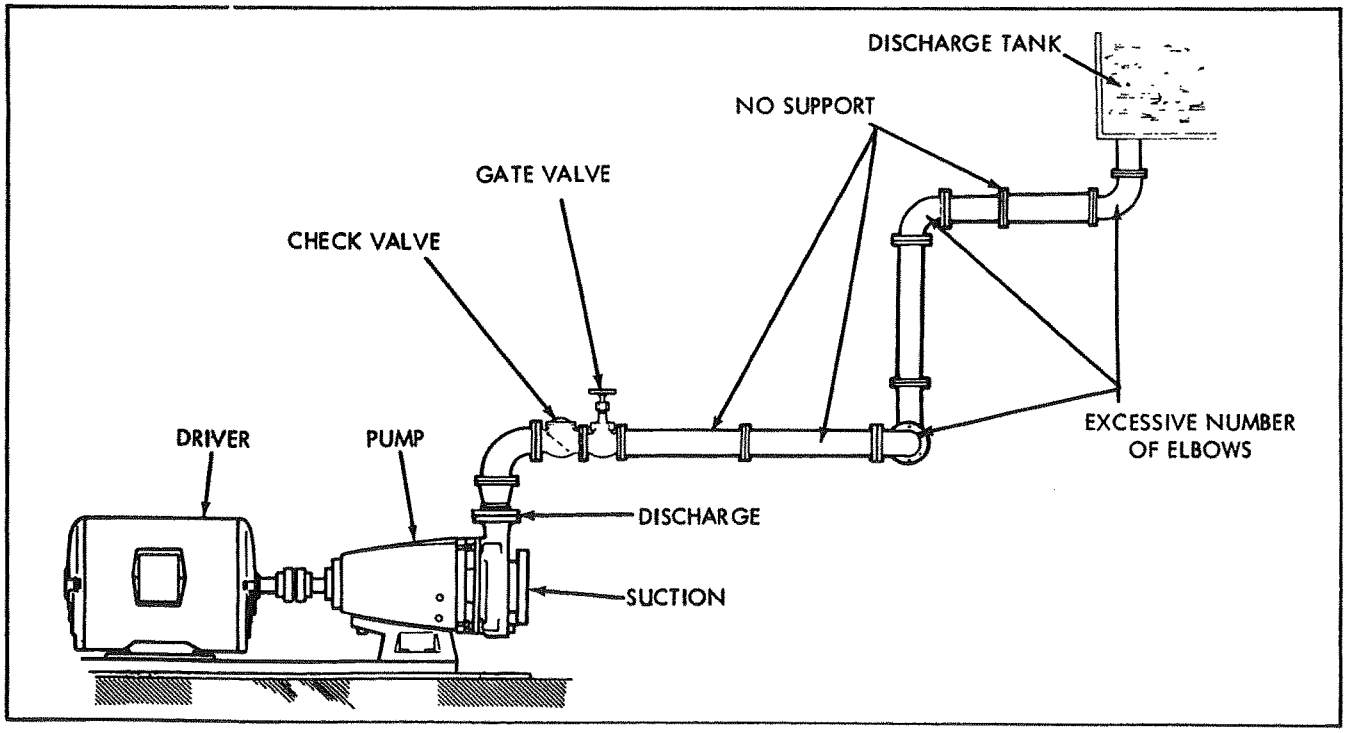

FIGURE 18. UNSATISFACTORY DISCHARGE PIPING - LONG WITH EXCESSIVE ELBOWS AND JOINTS AND NO SUPPORT

discharge piping is used. Straight taper increasers and/or reducers are satisfactory in discharge applications.

EXPANSION JOINTS. Expansion joints are used primarily to prevent the transmission of piping strain, caused by thermal expansion and contraction, piping misalignment, pressure changes, or other causes, to the pump casing. They are also used to suppress any noise that may be transmitted through the piping.

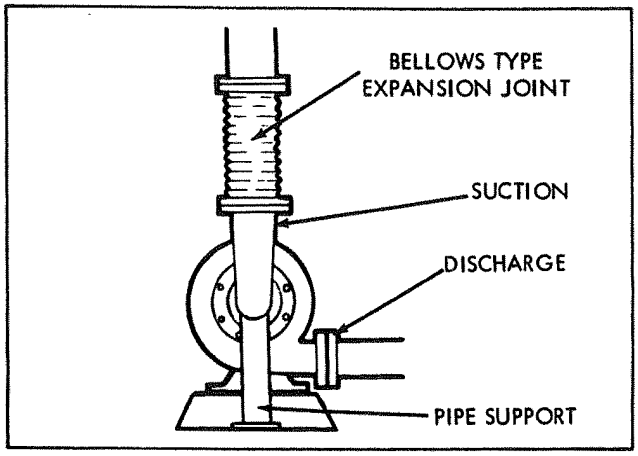

FIGURE 20. EXPANSION JOINT IN SUCTION LINE

It is recommended that the flexible metal type of expansion joint be used, because rubber expansion joints, while costing less, have a tendency to deteriorate, making frequent replacement necessary.

If an expansion joint must be used, an anchor or restraining device should be installed between the joint and the pump to prevent objectional forces from being transmitted to the pump. If an anchor is not installed at this point, a force equal to the area of the joint times the pressure in the pipe is developed and transmitted to the pump. This force may exceed the allowable flange loading, and could result in damage to the pump or piping.

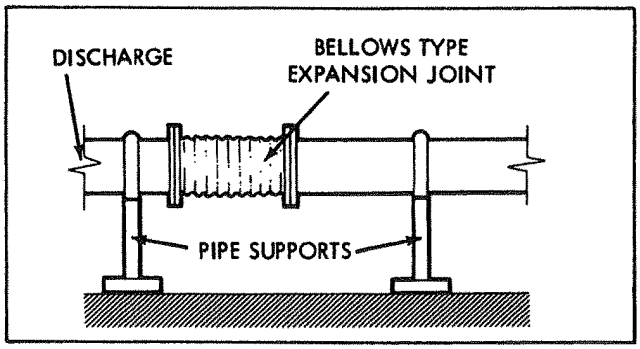

FIGURE 21. EXPANSION JOINT IN DISCHARGE PIPING

PIPE ALIGNMENT. Proper piping alignment is essential before connection is made. Piping alignment should never be achieved by force, this could produce strain on the piping and the pump casing. Proper supports should be installed for the piping to keep its weight off the pump casing.

When flange bolts are used, line up the piping first, then loosely install flange bolts. Check the piping alignment, and tighten the flange bolts until all bolts are tightened securely.

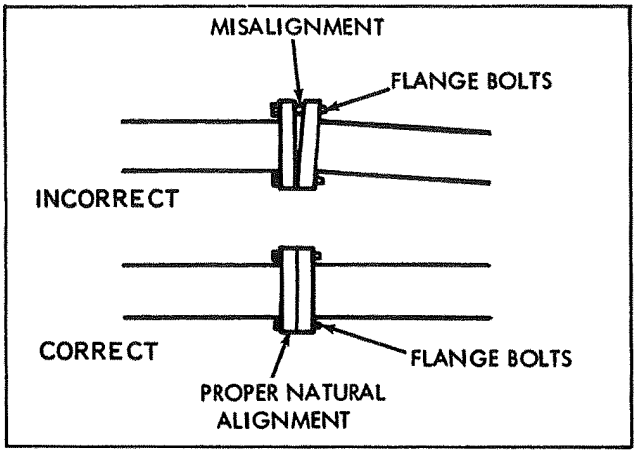

FIGURE 22. PIPE ALIGNMENT

AIR IN PIPING. One of the most common conditions affecting pump efficiency is the formation of air pockets in the suction line. The air pockets are a result of high points and improper installation of elbows, reducers, and valves in the suction piping.

For suction lift applications, lantern rings are required to prevent air from leaking into the pump through the stuffing box, or at the joints.

The pump packings or seal depend on the liquid being pumped for lubrication. Excessive air can prevent proper lubrication with resultant damage to them.

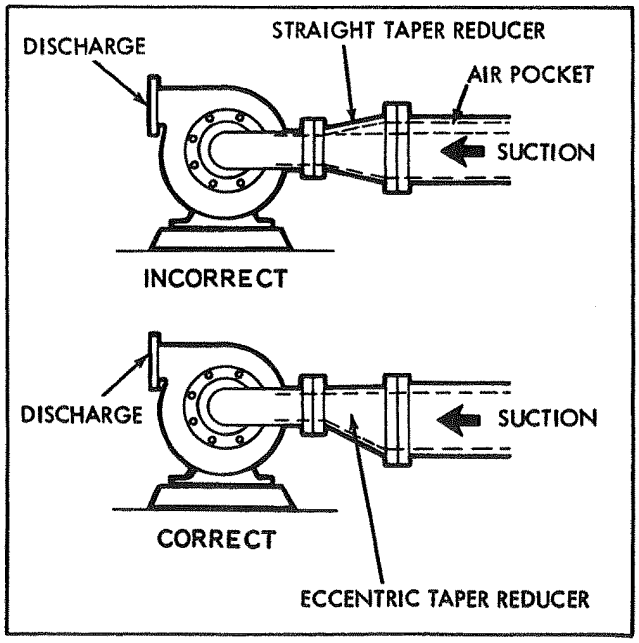

FIGURE 23. AIR POCKETS IN REDUCER

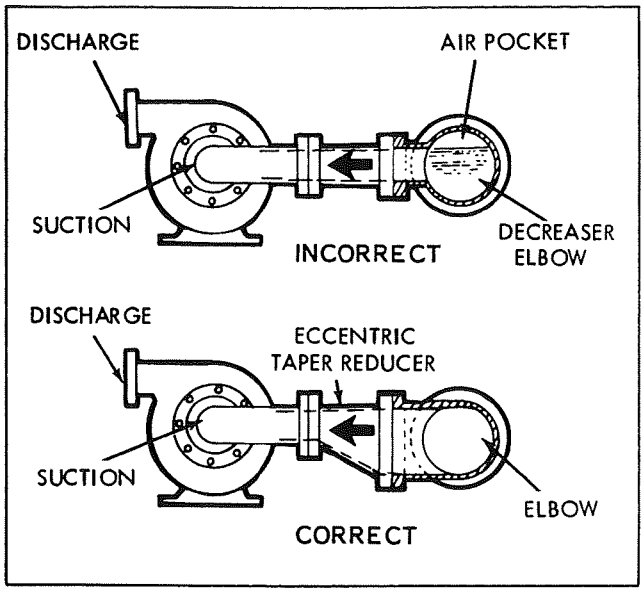

FIGURE 24. AIR POCKET IN ELBOW

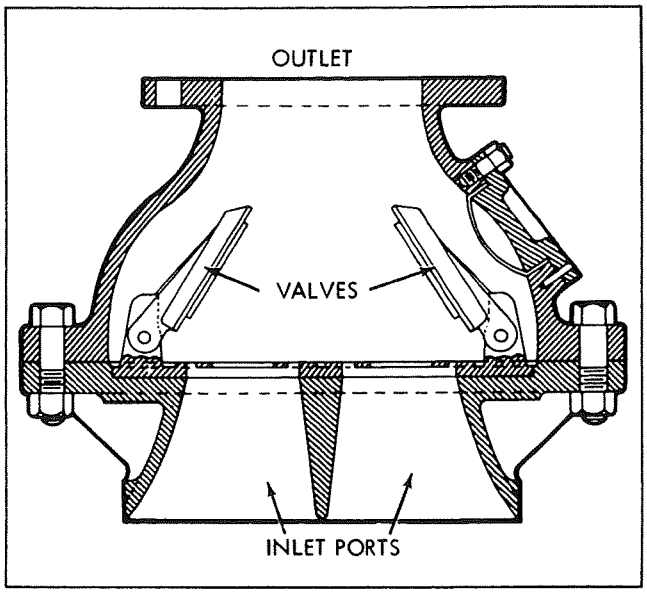

FIGURE 26. FOOT VALVE

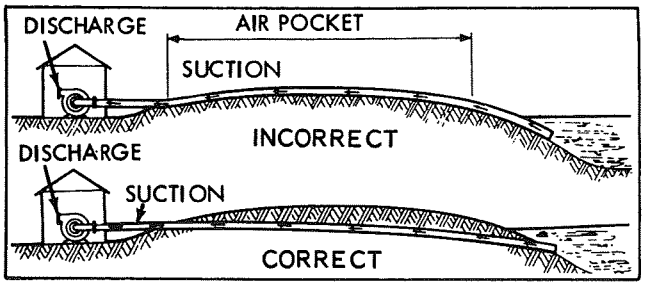

FIGURE 25. AIR POCKET IN HORIZONTAL SUCTION PIPING

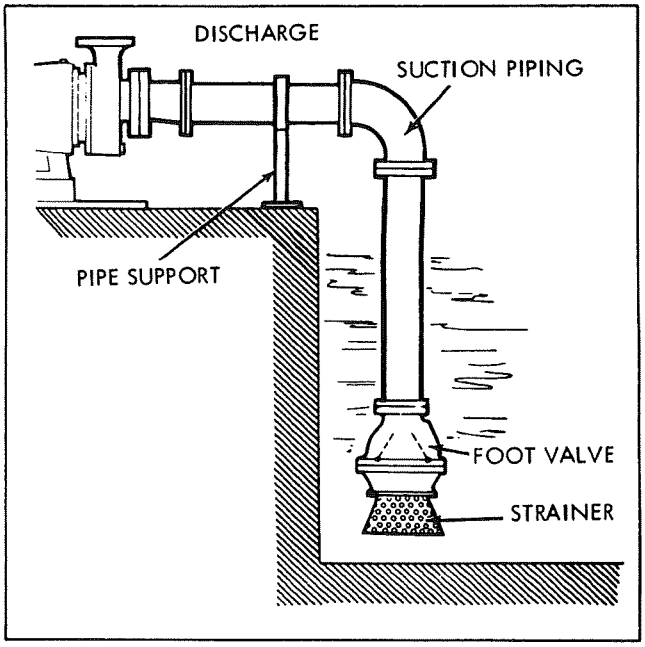

FIGURE 27. FOOT VALVE INSTALLED WITH SCREEN

In suction lift applications the suction pipe in the liquid well must be sufficiently submerged to prevent exposure of the end of the pipe when the well is at its minimum level and to prevent vortexing action (whirlpool effect) of the liquid at the suction pipe, which will draw air into the pipe. Also, care should be taken to keep the suction pipe located away from the well inlet since the incoming liquid may be carrying air bubbles. Another cause of air in the liquid is dropping of the liquid from too high a point into the well.

VALVES. Valves are an important part of your installation, for they facilitate priming of the pump, and control the volume of the pumped liquid.

SUCTION LIFT. In suction lift applications where the suction lift is low a foot valve can be installed, to maintain the prime on the pump. A foot valve is essentially a check valve, allowing flow in one direction only toward the pump. When the pump is shut down, the pressure of the liquid returning to the well, causes the valve to close, retaining the liquid in the suction line.

A slow closing check valve should be installed when the static discharge head is high. A foot valve should not be used under these conditions, as failure of the driver would allow the water to rush back rapidly thus causing a heavy water hammer.

Foot valves, when used, should be of the flat type rather than multiple spring type. The valve should have a large inlet area, because the friction loss in a foot valve is high. Install check and foot valves as indicated by arrow to ensure proper installation.

FLOODED SUCTION. When the liquid source is above the pump centerline, a flooded suction condition exists, and a gate valve is required to shut off the liquid supply for pump inspection and maintenance. The gate valve should be installed with the stem in a horizontal or downward position to prevent formation of an air pocket in the valve.

DISCHARGE VALVES. Tne discharge piping should include a check valve and a gate valve. The check

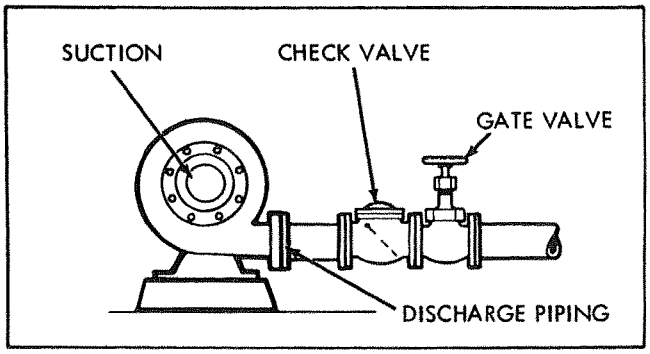

FIGURE 28. GATE VALVE AND CHECK VALVE

valve should be located between the gate valve and the pump. If an increaser is used in the discharge piping, the increaser should be installed between the pump nozzle and the check valve. The check valve protects against a reverse flow of the liquid if the driver fails.

The gate valve is used in the priming operation, as a throttling valve to control pump volume, and to shut down the pump for inspection and maintenance.

AIR VENT VALVE. Vent valves are installed at the high points in the pump casing to allow air or vapor to escape. These valves are used to release trapped air from the pump casing during priming and when pump becomes air bound.

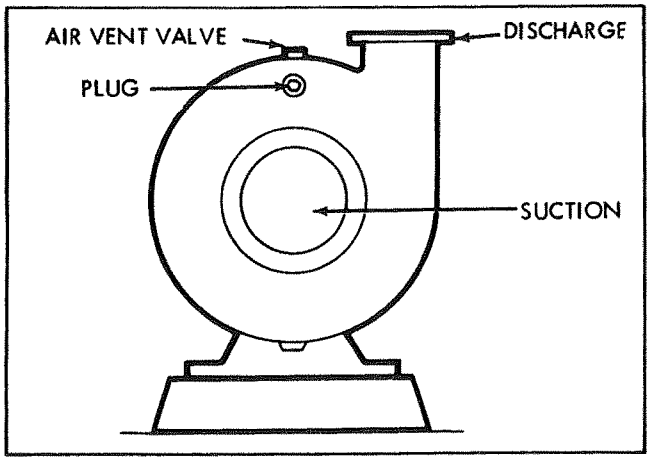

FIGURE 29. AIR VENT VALVE OR PLUG

STRAINERS AND SCREENS. It is important to screen the suction piping to remove foreign matter that can clog the pump and impair its capacity, or stop it completely. Small particles such as sand, dirt, scale from inside pipe and other extraneous materials can get into the close clearance parts of the pump and cause considerable damage to the parts.

Strainers should be selected so as to have a total area of holes equal to at least four times the suction pipe area.

In applications where sticks, twigs, leaves and other large debris are present, a larger outside screen should be placed around the suction inlet to prevent choking of the strainer. This screen should have sufficient openings so that flow velocity does not exceed two feet per second.

PRIMING THE PUMP. Your pump will not operate satisfactorily until it is primed. All air must be expelled from the suction piping and pump casing, and replaced by the liquid to be pumped. There are several methods of priming pumps. The one you select will depend on your specific requirements.

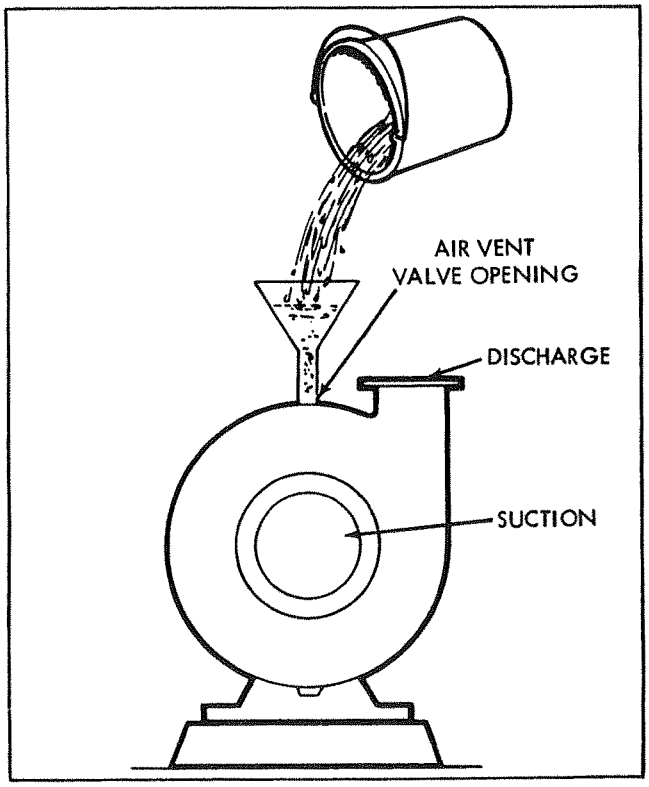

FIGURE 30. PRIMING BY HAND

FLOODED SUCTION PRIMING. This method of priming a pump is relatively simple. The liquid source is located above the pump, and all that is necessary to prime the pump is to open the air vent valve or plug in the pump casing, and to crack the gate valve in the suction line. The suction line and pump should be filled slowly until a steady stream of liquid is observed flowing from the air vent. After your pump is operating, it is recommended that the air vent valve or plug be opened again to insure that all air has been expelled from the pump casing.

FOOT VALVE PRIMING. A foot valve can be used for priming on suction lift applications. The foot valve located at the bottom end or foot of the suction piping, functions as a check valve which allows flow in one direction only, toward the pump.

Initial priming is accomplished by completely filling the suction piping and pump casing with the liquid to be pumped. This can be done by removing the air vent valve or plug at the top of the pump casing and inserting a pipe nipple in the orifice, with an appropriate increaser to accommodate a hose connection.

A priming line can also be inserted in the discharge piping between the check valve and the pump or the priming can be done with a bucket and funnel. The important thing is to completely fill the suction pipe and pump casing with liquid.

When the pump is started, the vacuum created by pumping the priming fluid, combined with atmospheric pressure in the liquid well, forces liquid into the suction piping, thus opening the foot valve and keeping it open until the pump is shut down. When the pump is shut down, the liquid being pumped reverses its flow, causing the foot valve to close, trapping the liquid in the suction piping and pump casing, thus maintaining a prime on the pump.

VACUUM PRIMING. Vacuum priming consists of removing air from the pump casing and suction piping and drawing liquid into them by means of a vacuum creating device. The types of vacuum equipment range from a simple hand pump to complex central priming systems. Your specific priming requirements will govern what type of vacuum primer to use.

AIR EJECTOR. One type of vacuum primer is the air ejector. If liquid under pressure or steam is available, an ejector can be used. The ejector is connected to the air vent orifice. A stream of the ejecting medium is passed through the ejector creating a vacuum in the ejector, and drawing air from the pump casing and suction piping. When liquid flows steadily from the ejector discharge pipe, the pump is primed.

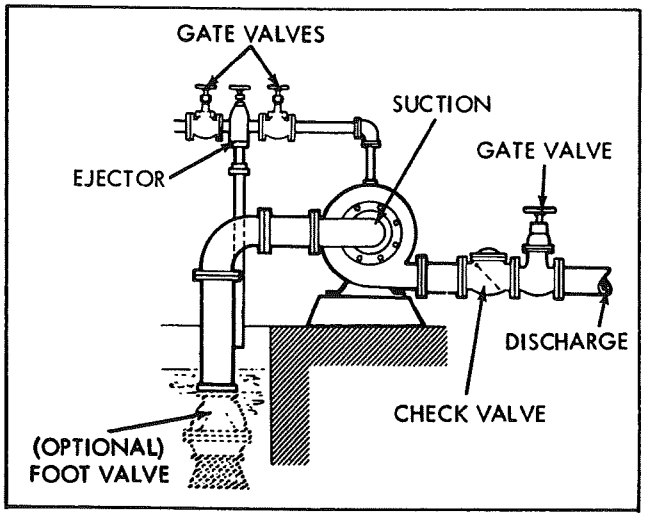

FIGURE 31. PRIMING BY EJECTOR

VACUUM PUMPS. Rotary or reciprocating pumps are frequently used as vacuum pumps. They fall into two categories, wet-vacuum and dry-vacuum. The principle of operation is essentially the same, however, the dry-vacuum pump cannot accommodate a liquid and air mixture while the wet-vacuum pump can accommodate liquid, air or a combination of both.

Vacuum pumps can be installed as part of a central priming system servicing many pumps, as an automatic priming system, or as a manually controlled independently driven pump.

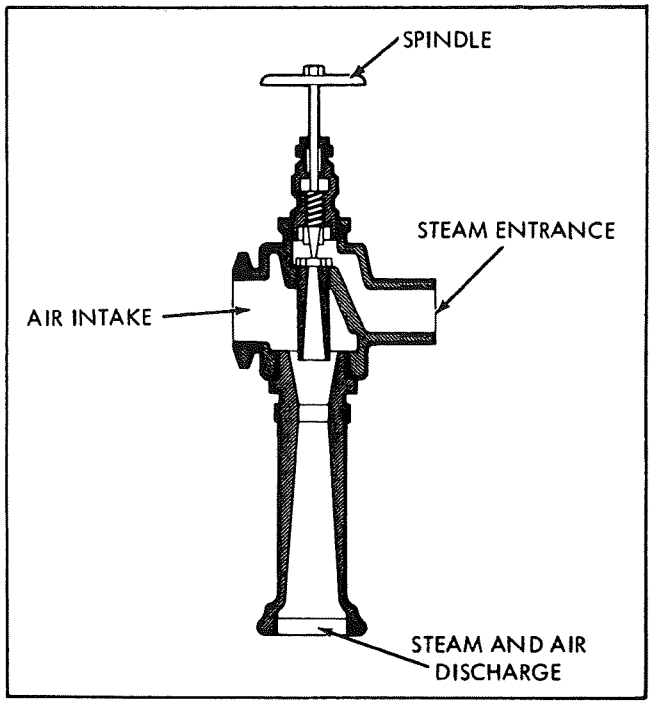

FIGURE 32. EJECTOR CUTAWAY

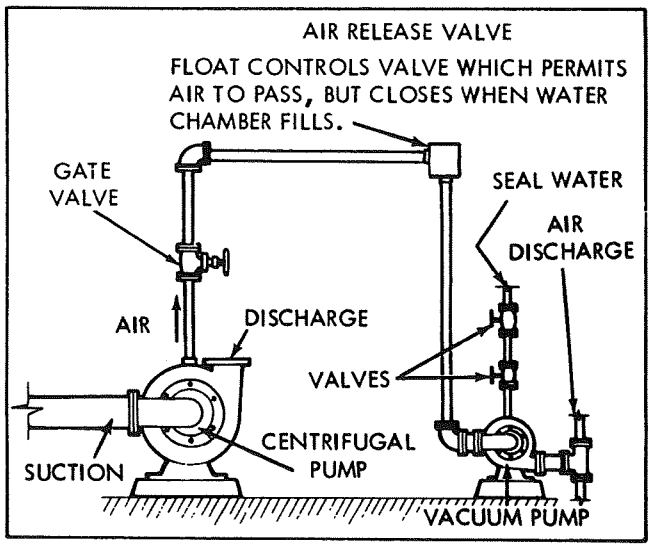

FIGURE 33. PRIMING BY VACUUM PUMP

The suction piping of the vacuum pump is connected to the air vent orifice on the pump to be primed. The vacuum produced by the vacuum pump removes air from the centrifugal pump suction piping and casing, and draws liquid from the liquid well into the centrifugal pump. Dry-vacuum pumps must be installed so that no liquid is taken into the air pump. Installation of a water trap, or use of a vacuum tank are recommended for dry vacuum pumps.

INDUCTOR PRIMING. On suction lift applications it may be desirable to prime your pump with a priming inductor. This type of primer is comprised of a liquid nozzle and an inductor at the foot end of the

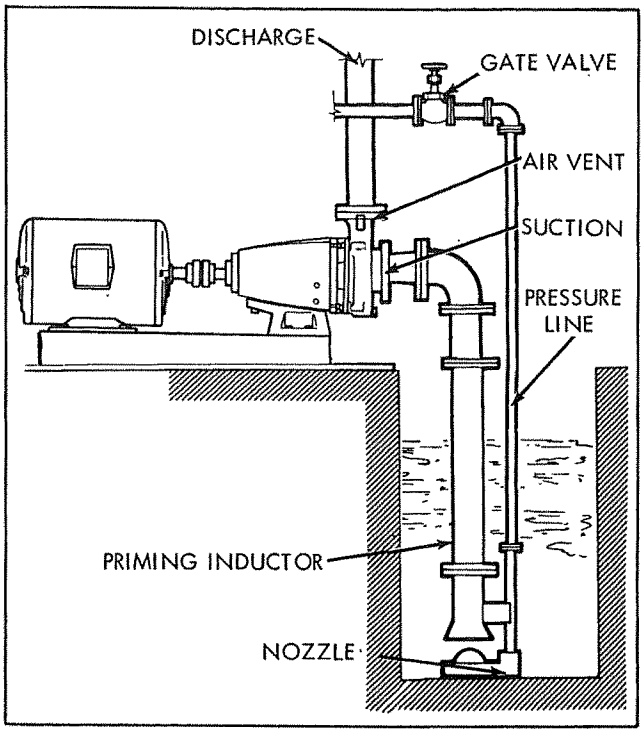

FIGURE 34. PRIMING BY INDUCTOR

suction piping. The nozzle and inductor are connected to a high pressure liquid supply such as a city water service.

The pump is primed by opening the valve in the pressure line, which allows the liquid to flow through the nozzle into the inductor. The velocity of the high pressure liquid drives the liquid into the suction piping and up to the pump, priming it.

ELECTRICAL WIRING. Normally, your pump will be supplied with an attached drive motor. The motor should be wired in accordance with the wiring diagram found on the motor name plate. Be sure the voltage, frequency, and phase of your power supply corresponds with the name plate data. It is advisable to provide a separate switch and overload protection for your pump motor to protect against power failure in some other area. Conversely, if the pump motor develops electrical problems, it will be isolated from other equipment.

PRESTARTING INSTRUCTION. The coupling halves should be connected. Prior to connection however, the drive motor should be started to make sure the direction of roatation is the same as the direction indicated by the arrow on the pump casing.

WARNING: On all 350 series pumps and the 364A with a 15" impeller on a #21 power frame, reverse rotation will destroy the pump.

After you are sure the motor is rotating clockwise you can couple the motor to the pump. Again, after coupling but BEFORE starting it is important to check coupling and shaft alignment. Use a standard dial indicator to align the motor shaft and pump shaft to within .003"-.005".

The suction and discharge piping should now be connected to the pump, and the pump primed.

CAUTION

Do not operate the pump without liquid. Pump seals or packing depend on the liquid being pumped for lubrication.

Open or close the various valves as required by your specific application. Start the pump and bring it up to operating temperature. After the temperature has stabilized, the pump should be shut down and the alignment rechecked. It will be necessary to check the alignment with the coupling halves both connected and disconnected.

Remember, any alignment adjustment made in one direction may affect the other direction so extreme care should be taken when final adjustment is made.

Make sure all pump, motor and base plate mounting bolts are firmly tightened down.

SPECIAL SUCTION PIPING SPECIFICATIONS FOR HORIZONTAL DOUBLE SUCTION PUMPS FOR ADDITIONAL DETAILS SEE PAGE 6

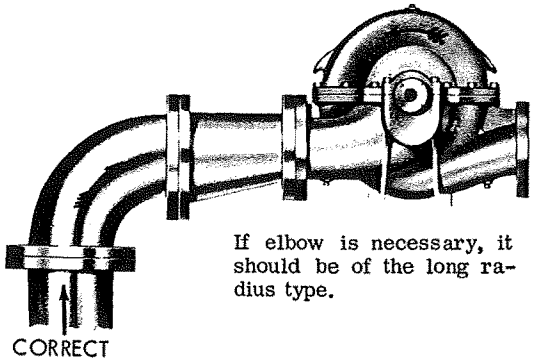

If elbow is necessary, it should be of the long radius type.

CORRECT

Discharge piping and suction piping should be supported close to the pump flange to prevent vibration and strain on pump casing.

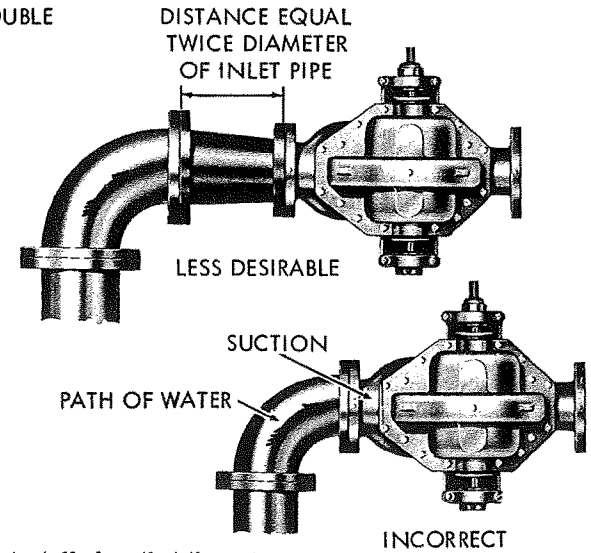

The suction pipe on horizontal double suction pumps, should not be installed so that there is an elbow close to the suction nozzle unless the elbow is mounted vertically. There is always an uneven flow of liquid through an elbow and when the elbow is installed at any angle other than vertical more water will enter one side of the impeller than enters the other side. This causes a reduction in capacity and efficiency and creates an axial thrust load which may over heat and possibly cause rapid wear of the thrust bearing.

THIS PAGE INTENTIONALLY LEFT BLANK

WARRANTY

Seller warrants equipment (and its component parts) of its own manufacture against defects in materials and workmanship under normal use and service for one (1) year from the date of installation or start-up, or for eighteen (18) months after the date of shipment, whichever occurs first. Seller does not warrant accessories or components that are not manufactured by Seller; however, to the extent possible, Seller agrees to assign to Buyer its rights under the original manufacturer's warranty, without recourse to Seller. Buyer must give Seller notice in writing of any alleged defect covered by this warranty (together with all identifying details, including the serial number, the type of equipment, and the date of purchase) within thirty (30) days of the discovery of such defect during the warranty period. No claim made more than 30 days after the expiration of the warranty period shall be valid. Guarantees of performance and warranties are based on the use of original equipment manufactured (OEM) replacement parts. Seller assumes no responsibility or liability if alterations, non-authorized design modifications and/or non-OEM replacement parts are incorporated If requested by Seller, any equipment (or its component parts) must be promptly returned to Seller prior to any attempted repair, or sent to an authorized service station designated by Seller, and Buyer shall prepay all shipping expenses. Seller shall not be liable for any loss or damage to goods in transit, nor will any warranty claim be valid unless the returned goods are received intact and undamaged as a result of shipment. Repaired or replaced material returned to customer will be shipped F.O.B., Seller's factory. Seller will not give Buyer credit for parts or equipment returned to Seller, and will not accept delivery of any such parts or equipment, unless Buyer has obtained Seller's approval in writing. The warranty extends to repaired or replaced parts of Seller's manufacture for ninety (90) days or for the remainder of the original warranty period applicable to the equipment or parts being repaired or replaced, whichever is greater. This warranty applies to the repaired or replaced part and is not extended to the product or any other component of the product being repaired. Repair parts of its own manufacture sold after the original warranty period are warranted for a period of one (1) year from shipment against defects in materials and workmanship under normal use and service. This warranty applies to the replacement part only and is not extended to the product or any other component of the product being repaired. Seller may substitute new equipment or improve part(s) of any equipment judged defective without further liability. All repairs or services performed by Seller, which are not covered by this warranty, will be charged in accordance with Seller's standard prices then in effect.

THIS WARRANTY IS THE SOLE WARRANTY OF SELLER AND SELLER HEREBY EXPRESSLY DISCLAIMS AND BUYER WAIVES ALL OTHER WARRANTIES EXPRESSED, IMPLIED IN LAW OR IMPLIED IN FACT, INCLUDING ANY WARRANTIES OF MERCHANTABILITY OR FITNESS FOR A PARTICULAR PURPOSE. Seller's sole obligation under this warranty shall be, at its option, to repair or replace any equipment (or its component parts) which has a defect covered by this warranty, or to refund the purchase price of such equipment or part. Under the terms of this warranty, Seller shall not be liable for (a) consequential, collateral, special or liquidated losses or damages; (b) equipment conditions caused by normal wear and tear, abnormal conditions of use, accident, neglect, or misuse of said equipment; (c) the expense of, and loss or damage caused by, repairs or alterations made by anyone other than the Seller; (d) damage caused by abrasive materials, chemicals, scale deposits, corrosion, lightning, improper voltage, mishandling, or other similar conditions; (e) any loss, damage, or expense relating to or resulting from installation, removal or reinstallation of equipment; (f) any labor costs or charges incurred in repairing or replacing defective equipment or parts, including the cost of reinstalling parts that are repaired or replaced by Seller; (g) any expense of shipment of equipment or repaired or replacement parts; or (h) any other loss, damage or expense of any nature.

The above warranty shall not apply to any equipment which may be separately covered by any alternate or special warranties.

PERFORMANCE: In the absence of Certified Pump Performance Tests, equipment performance is not warranted or guaranteed. Performance curves and other information submitted to Buyer are approximate and no warranty or guarantee shall be deemed to arise as a result of such submittal. All testing shall be done in accordance with Seller's standard policy under Hydraulic Institute procedures.

LIABILITY LIMITATIONS: Under no circumstances shall the Seller have any liability under the Order or otherwise for liquidated damages or for collateral, consequential or special damages or for loss of profits, or for actual losses or for loss of production or progress of construction, regardless of the cause of such damages or losses. In any event, Seller's aggregate total liability under the Order or otherwise shall not exceed the contract price.

ACTS OF GOD: Seller shall in no event be liable for delays in delivery of the equipment or other failures to perform caused by fires, acts of God, strikes, labor difficulties, acts of governmental or military authorities, delays in transportation or procuring materials, or causes of any kind beyond Seller's control.

COMPLIANCE WITH LAW: Seller agrees to comply with all United States laws and regulations applicable to the manufacturing of the subject equipment. Such compliance shall include: The Fair Labor Standards Acts of 1938, as amended; Equal Employment Opportunity clauses of Executive Order 11246, as amended; Occupational Safety and Health Act of 1970 and the standards promulgated thereunder, if applicable. Since compliance with the various Federal, State, and Local laws and regulations concerning occupational health and safety, pollution or local codes are affected by the use, installation and operation of the equipment and other matters over which Seller has no control, Seller assumes no responsibility for compliance with those laws and regulations, whether by way of indemnity, warranty, or otherwise. It is incumbent upon the Buyer to specify equipment which complies with local codes and ordinances.

AURORA®
800 Airport Road
North Aurora, Illinois 60542
630-859-7000
www.aurorapump.com

AURORA® MODEL 344A & 364A PUMPS

ON STEEL BASES

*18" X 34"

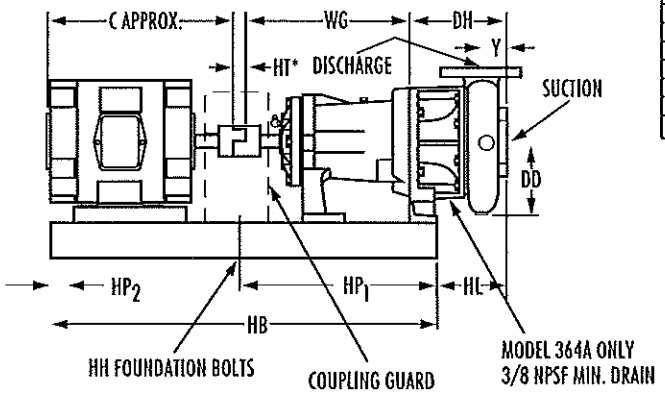

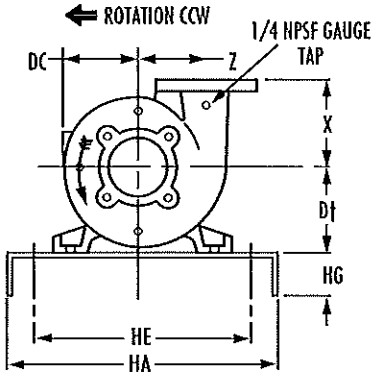

STANDARD POSITION (1)

BASE	SIZE	HA	HB	HE	HG	HH QTY	HH SIZE	HP_1	HP_2
1	12 X 30	12	30	9	3	2	5/8	15	–
2	~~17 X 34~~ X	17	34	15	3	4	5/8	1-1/4	1-1/4
3	18 X 38	18	38	16	4	4	5/8	1-1/4	1-1/4
4	18 X 42	18	42	16	4	4	5/8	1-1/4	1-1/4
5	18 X 44	18	44	15	4	4	5/8	1	1
6	18 X 48	18	48	15	4	4	5/8	1	1
7	22 X 60	22	60	19	4	4	5/8	1	1

NOTE: WHEN TWO "D" DIMENSIONS ARE INDICATED ALWAYS USE THE LARGER FIGURE.		POWER FRAME	1	2	340 3	360 3
		WG	10-5/16	13-13/16	13-13/16	13-13/16
D	340 CASE BORE	7	5-1/4	6-1/4	–	–
		9	6-1/4	7	7	7
		11	–	7	7	7
		12	–	7	7	7
	360 CASE BORE	7	5-1/4	6-1/4	–	–
		9	5-1/4	7	7	7
		11	–	7	7	7
		12	–	7	7	7

MOTOR FRAME	C APPROX	D	BASE NUMBER			
56	12		1	N/A	N/A	N/A
143T	12		1	N/A	N/A	N/A
145T	13		1	3	N/A	N/A
182T	13		1	3	N/A	N/A
184T	14		1	3	N/A	N/A
213T	16	5-1/4	2	3	N/A	3
215T	18	5-1/4	2	3	N/A	3
254T	21	6-1/4	3	4	4	4
256T	23	6-1/4	N/A	4	4	4
284T	24	7	N/A	5	5	5
284TS	22	7	N/A	5	5	5
286T	25	7	N/A	5	5	5
286TS	24	7	N/A	5	5	5
324T	26	8	N/A	6	6	6
324TS	25	8	N/A	6	6	6
326T	28	8	N/A	6	6	6
326TS	26	8	N/A	6	6	6
364T	29	9	N/A	6	6	6
364TS	27	9	N/A	6	6	6
365TS	28	9	N/A	6	6	6
404TS	30	10	N/A	7	7	7

PUMP SIZE								344A DH		364A DH		344A HL			364A HL		
DISCH	SUCT	CASE BORE	X	Y	Z	DC	DD	FRAME 1	FRAME 2 & 3	FRAME 1	FRAME 2 & 3	FRAME 1	FRAME 2	FRAME 3	FRAME 1	FRAME 2	FRAME 3
PUMPS WITH THREADED CONNECTIONS																	
1-1/4	1-1/2	7	5-1/4	2-7/16	4-3/16	4-15/16	5-3/16	7-3/16	N/A	10-1/4	N/A	4-11/16	N/A	N/A	6-1/2	N/A	N/A
1-1/4	1-1/2	9	6-5/8	2-9/16	5-3/8	6-3/16	6-3/8	7-1/4	N/A	10-5/16	N/A	4-3/4	N/A	N/A	6-9/16	N/A	N/A
1-1/2	2	7	5-3/8	2-1/2	4-5/16	5-1/8	5-3/8	7-5/16	N/A	10-3/8	N/A	4-13/16	N/A	N/A	6-5/8	N/A	N/A
1-1/2	2	9	6-3/4	2-5/8	5-1/2	6-5/16	6-9/16	7-3/8	8-3/8	10-7/16	11-1/4	4-7/8	6-3/8	N/A	6-11/16	8	N/A
1-1/2	2	11	9	2-13/16	6-1/8	7-1/16	7-1/4	N/A	8-9/16	N/A	11-7/16	N/A	6-1/2	N/A	N/A	8-1/8	N/A
1-1/2	2	12	7-3/4	2-3/4	7-1/16	8	8-1/4	N/A	8-5/8	N/A	11-1/2	N/A	6-5/8	N/A	N/A	8-1/4	8-1/4
PUMPS WITH ANSI 125 LB FLANGED CONNECTIONS																	
2	2-1/2	7	5-5/8	1-7/8	4-9/16	5-3/8	5-13/16	6-13/16	7-13/16	9-7/8	10-11/16	4-5/16	5-13/16	N/A	6-1/8	7-7/16	N/A
2	2-1/2	9	7	1-7/8	5-11/16	6-1/2	6-7/8	6-3/4	7-3/4	9-13/16	10-5/8	4-1/4	N/A	5-3/4	6-1/16	N/A	7-3/8
2	2-1/2	12	8	1-7/8	7-3/16	8-3/16	8-1/2	N/A	7-7/8	N/A	10-3/4	N/A	5-7/8	N/A	N/A	7-1/2	N/A
2	3	11	8	2-3/8	6-1/2	7	7-3/8	N/A	8 1/2	N/A	11-3/8	N/A	6-3/16	N/A	N/A	7-13/16	N/A
2-1/2	3	7	5-7/8	2	4-13/16	5-13/16	6-1/4	7-1/16	8-1/16	10-1/8	10-15/16	4-9/16	6-1/16	N/A	6-3/8	7-11/16	N/A
2-1/2	3	9	7-1/4	2	5-15/16	6-3/4	7-1/4	7	8	N/A	10-7/8	4-1/2	N/A	6	N/A	7-5/8	7-5/8
2-1/2	3	12	8-1/4	2	7-3/8	8-3/8	8-3/4	N/A	8-1/8	N/A	11	N/A	6-1/8	N/A	N/A	7-3/4	7-3/4
3	4	9	7-1/2	2-1/8	6-1/8	6-7/8	7-7/16	7-1/4	8-1/4	N/A	11-1/8	4-3/4	6-1/4	6-1/4	N/A	7-7/8	7-7/8
3	4	11	9	2-3/4	7	7-9/16	8-3/16	N/A	9-3/16	N/A	12-1/16	N/A	6-13/16	N/A	N/A	8-7/16	N/A
3	4	12	8-1/2	2-1/8	7-9/16	8-7/16	8-15/16	N/A	8-3/8	N/A	11-1/4	N/A	6-3/8	6-3/8	N/A	8	8
4	4	7	6-1/2	2-1/2	5-1/2	6-7/16	7-5/16	7-15/16	8-15/16	11	11-13/16	5-7/16	6-15/16	N/A	7-1/4	8-9/16	N/A
4	5	9A	7-1/4	3-1/8	5-3/4	6-11/16	7-3/8	N/A	9-3/8	N/A	12-1/4	N/A	7-3/8	7-3/8	N/A	9	9
4	5	9B	7-3/4	2-5/8	6-5/8	8-1/16	8-11/16	N/A	9	N/A	11-7/8	N/A	7	N/A	N/A	8-5/8	N/A
4	5	11	9	3	7-1/4	7-15/16	8-11/16	N/A	9-5/8	N/A	12-1/2	N/A	7-1/4	N/A	N/A	8-7/8	N/A
4	5	12	8-3/4	2-5/8	7-15/16	8-7/8	9-9/16	N/A	9-1/8	N/A	12	N/A	7-1/8	7-1/8	N/A	8-3/4	8-3/4
5	6	11	9	3-1/8	8-1/16	8-11/16	10-1/8	N/A	10-1/8	N/A	13	N/A	7-3/4	7-3/4	N/A	9-3/8	9-3/8
5	6	12	9	2-7/8	8-5/16	9-1/4	10-1/8	N/A	9-5/8	N/A	12-1/2	N/A	7-5/8	7-5/8	N/A	9-1/4	9-1/4
6	6	9	8-1/4	2-3/4	7	8	9	N/A	9-1/4	N/A	12-1/8	N/A	7-1/4	N/A	N/A	8-7/8	N/A
6	6	11	9-1/4	3-1/8	8-11/16	9-11/16	10-13/16	N/A	10-1/8	N/A	13	N/A	8-1/8	8-1/8	N/A	9-3/4	9-3/4
6	6	12	9-1/4	3-1/8	8-11/16	9-11/16	10-13/16	N/A	10-1/8	N/A	13	N/A	N/A	8-1/8	N/A	N/A	9-3/4

NOTES:
1. All dimensions in inches.
2. Dimensions may vary ± 1/4.
3. Not for construction purposes unless certified.
4. N/A = not applicable.
5. Check discharge position. Casing dimensions which exceed dimension "D" may require pads for the pump and/or motor.
6. Conduit box is shown in approximate location. Dimensions are not specified as they vary with each motor manufacturer
* Dim "HT" may vary 1/8" TO 1".
† D Dimension of 5 x 6 x 11, 5 x 6 x 12, 6 x 6 x 11 and 6 x 6 x 12 pump with 213T thru 326T motor is 8".

© 2013 Pentair Ltd.

PENTAIR

AURORA®

CENTRIFUGAL PUMP

INSTRUCTION AND OPERATION MANUAL

NOTE! To the installer: Please make sure you provide this manual to the owner of the equipment or to the responsible party who maintains the system.

Part # A-03-258 | © 2012 Pentair Ltd. | 11/28/12

CALIFORNIA PROPOSITION 65 WARNING:

⚠ Warning: This product and related accessories contain chemicals known to the State of California to cause cancer, birth defects or other reproductive harm.

CENTRIFUGAL PUMP OPERATION. Centrifugal pumps operate under a wide range of conditions. The pump you have selected exactly fits your specific requirements. Before putting your pump into operation however, there are certain basic ground rules that have to be followed to assure maximum efficiency, long pump life, and maintenance free service.

Centrifugal pumps should never be started or run dry. Operating a pump dry can cause burning of the packings or seal, resulting in distruction of the packings or seals, and possible scoring of the pump shaft. To prevent the pump from being run dry, the pump should be primed before starting it.

A centrifugal pump should not be throttled, or the volume controlled on the suction side of the pump. Throttling the pump on the suction side, not only reduces the capacity, but also reduces pump efficiency, and more important, can cause serious damage to the pump due to cavitation. Cavitation occurs when the pressure at any point inside the pump drops below the vapor pressure of the liquid. The liquid flashes and forms vapor bubbles. These bubbles move along with the liquid into a higher pressure area, where the bubbles collapse or implode creating an area of low pressure. The implosion phenomenon is characterized by a crackling noise and sometimes by loud knocking as the vapor bubbles are collapsed. Repetition of this action causes a wearing away of the metal on the impeller and other parts of the pump, and if allowed to continue can result in serious damage to the pump.

Pump capacity can be effectively controlled by use of a throttling valve in the discharge piping. Most centrifugal pumps can be operated for brief periods of time with the throttling valve closed without building up excessive pressure or overloading the drive unit. In fact, a centrifugal pump operating against a closed discharge line at its rated capacity, actually requires less power to operate than it does when the throttling valve is open.

The pump should never be started with the throttling valve completely closed however because a condition of water hammer could exist. The condition of water hammer is caused by an increase in pressure due to changes in velocity of the liquid flowing through the pipe line. When the velocity is changed by closing a valve or by some other means, the magnitude of the pressure produced is frequently much greater than the static pressure on the line, and may cause rupture or damage to the pump, piping, or fittings. Water hammer may be controlled by regulating valve closure, or the use of relief valves and slow closing check valves.

On pumps equipped with packings, there should be sufficient leakage from the packing to insure lubrication of the packing and effective cooling of the stuffing box. The packing glands should always be adjusted evenly and not too tightly. Over tightening the packing can generate heat which will burn the packing and cause scoring of the shaft, making it necessary to replace both the shaft and the packings.

Adequate precautions should be taken to prevent freezing of liquid in the pump when the pump is not in operation. If there is any possibility of freezing, the water should be drained off by removal of the plugs provided in the pump casing.

All mounting bolts and piping connections must be firmly tightened to prevent excessive vibration, leakage, and possible damage to the pump. The mounting bolts are particularly important. If they are not firmly tightened, the base plate upon which the pump is mounted may deflect, causing a misalignment of the pump and the driver.

STARTING THE PUMP. In order to start your pump, it will first be necessary to prime it.

PRIMING THE PUMP. Your pump will not operate satisfactorily until it is primed. All air must be

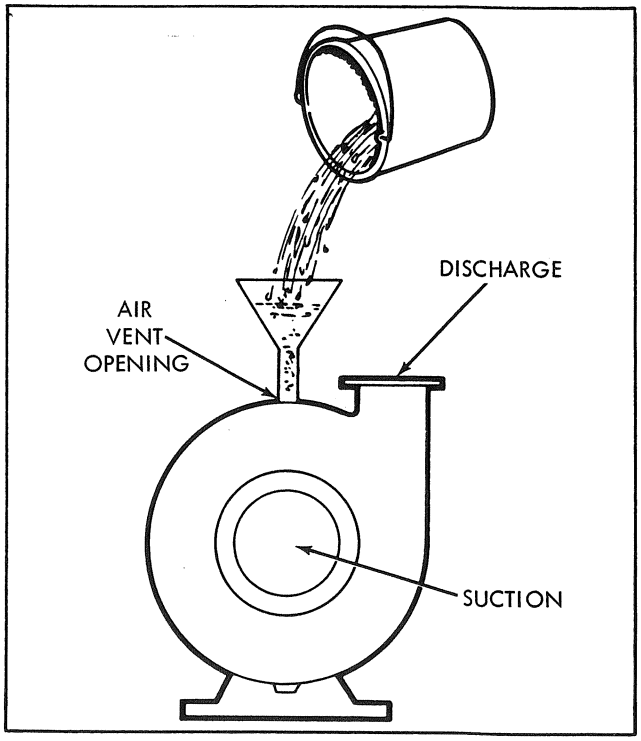

FIGURE 1. PRIMING BY HAND

expelled from the suction piping and pump casing, and replaced by the liquid to be pumped. There are several methods of priming pumps. The one you select will depend on your specific requirements.

FLOODED SUCTION PRIMING. This method of priming a pump is relatively simple. The liquid source is located above the pump, and all that is necessary to prime the pump is to open the air vent valve or plug in the pump casing, and to crack the gate valve in the suction line. The suction line and pump should be filled slowly until a steady stream of liquid is observed flowing from the air vent. After your pump is operating, it is recommended that the air vent valve or plug be opened again to insure that all air has been expelled from the pump casing.

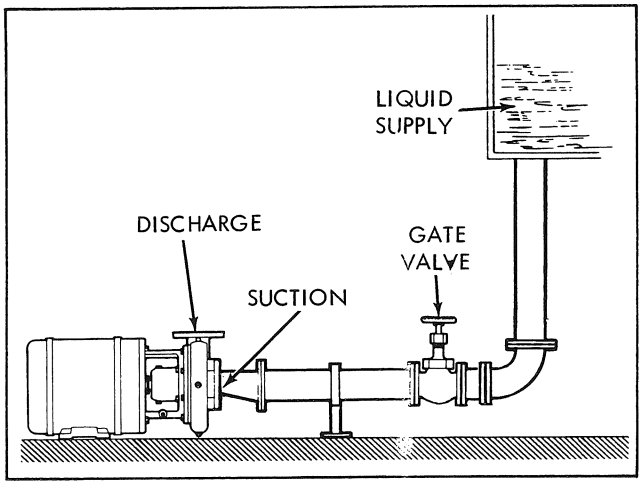

FIGURE 2. FLOODED SUCTION PRIMING

FOOT VALVE PRIMING. A foot valve can be used for priming on suction lift applications. The foot valve located at the bottom end or foot of the suction

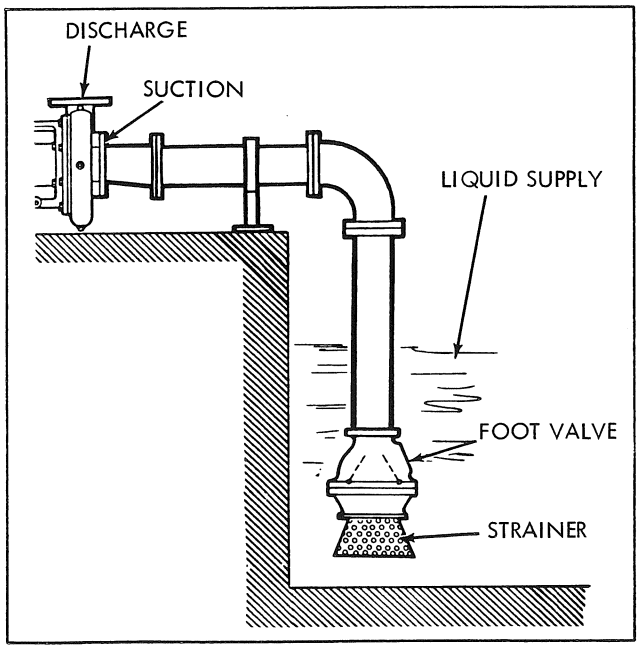

FIGURE 3. PRIMING WITH A FOOT VALVE

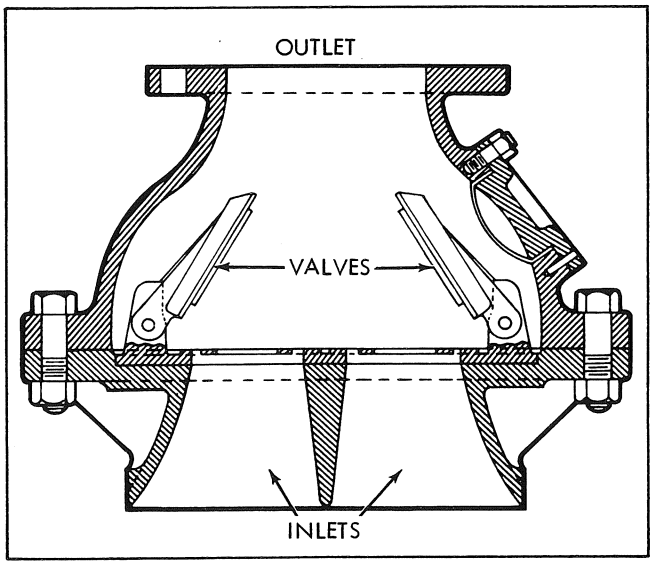

FIGURE 4. FOOT VALVE CUTAWAY

piping, functions as a check valve which allows flow in one direction only, toward the pump.

Initial priming is accomplished by completely filling the suction piping and pump casing with the liquid to be pumped. This can be done by removing the air vent valve or plug at the top of the pump casing, and inserting a pipe nipple in the orifice with an appropriate increaser to accommodate a hose connection. A priming line can also be inserted in the discharge piping between the check valve and the pump, or the priming can be done with a bucket and funnel. The important thing is to completely fill the suction pipe and pump casing with liquid.

When the pump is started, the vacuum created by pumping the priming fluid, combined with atmospheric pressure in the liquid well, forces liquid into the suction piping, thus opening the valve and keeping it open until the pump is shut down. When the pump is shut down, the liquid being pumped reverses its flow causing the valve to close. The liquid is now trapped in the suction piping and pump casing, thus maintaining a prime on the pump.

VACUUM PRIMING. Vacuum priming consists of removing air from the pump casing and suction piping, and drawing liquid into them by means of a vacuum creating device. The types of vacuum equipment range from a simple hand pump to complex central priming systems. Your specific priming requirements will govern what type of vacuum primer you use.

AIR EJECTOR. One type of vacuum primer is the air ejector. If liquid under pressure, or steam is available, an ejector can be used. The ejector is connected to the air vent orifice. A stream of the ejecting medium is passed through the ejector creating a vacuum in the ejector, and drawing air from the pump casing and suction piping. When liquid flows steadily from the ejector discharge pipe, the pump is primed.

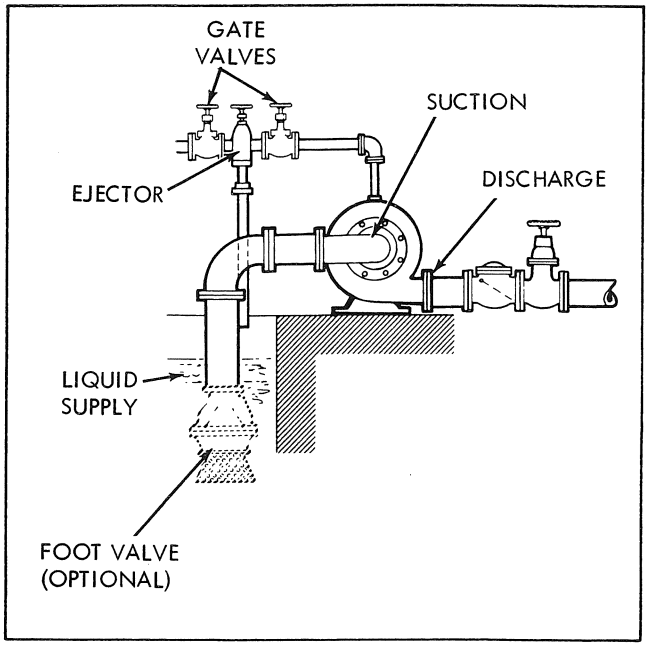

FIGURE 5. PRIMING BY EJECTOR

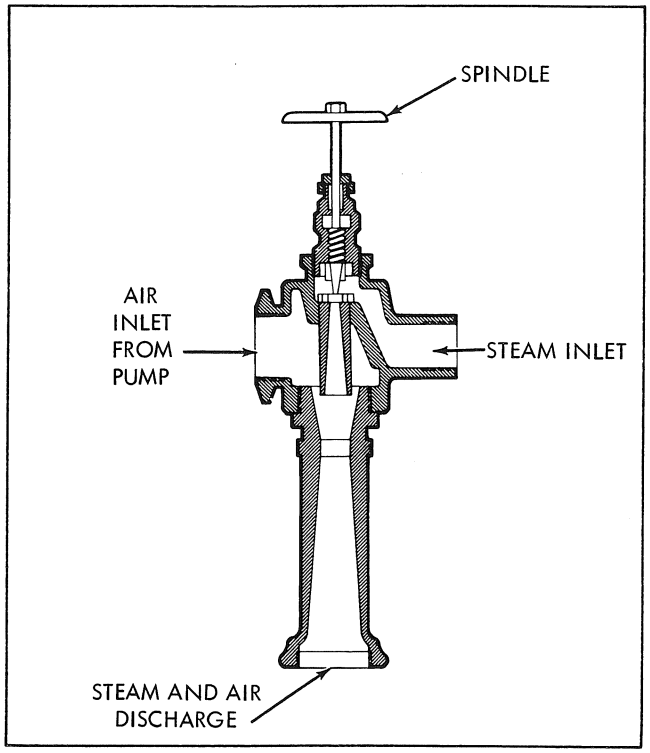

FIGURE 6. EJECTOR CUTAWAY

VACUUM PUMPS. Rotary or reciprocating pumps are frequently used as vacuum pumps. They fall into two categories, wet-vacuum and dry-vacuum. The principle of operation is essentially the same, however, the dry-vacuum pump cannot accommodate a liquid and air mixture, while the wet-vacuum pump can accommodate liquid, air, or a combination of both.

Vacuum pumps can be installed as part of a central priming system servicing many pumps, as an automatic priming system, or as a manually controlled independently driven pump.

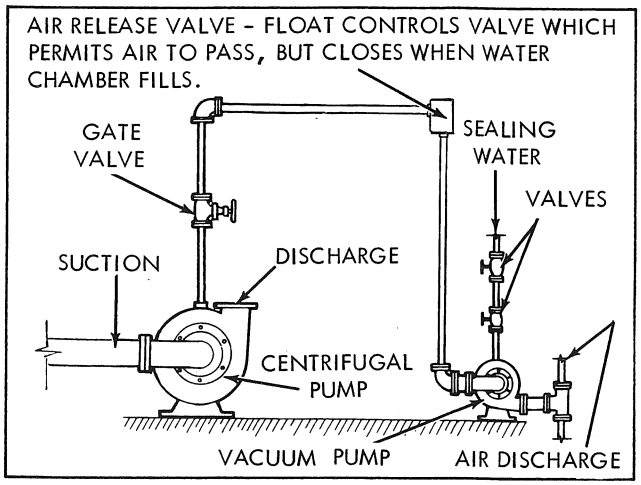

FIGURE 7. VACUUM PUMP PRIMING

The suction piping of the vacuum pump is connected to the air vent orifice on the pump to be primed. The vacuum produced by the vacuum pump removes air from the turbine pump suction piping and casing, and draws liquid from the liquid well into the turbine pump. Dry-vacuum pumps must be installed so that no liquid is taken into the air pump. Installation of a water trap, or use of a vacuum tank are recommended for dry vacuum pumps.

INDUCTOR PRIMING. On suction lift applications it may be desirable to prime your pump with a priming

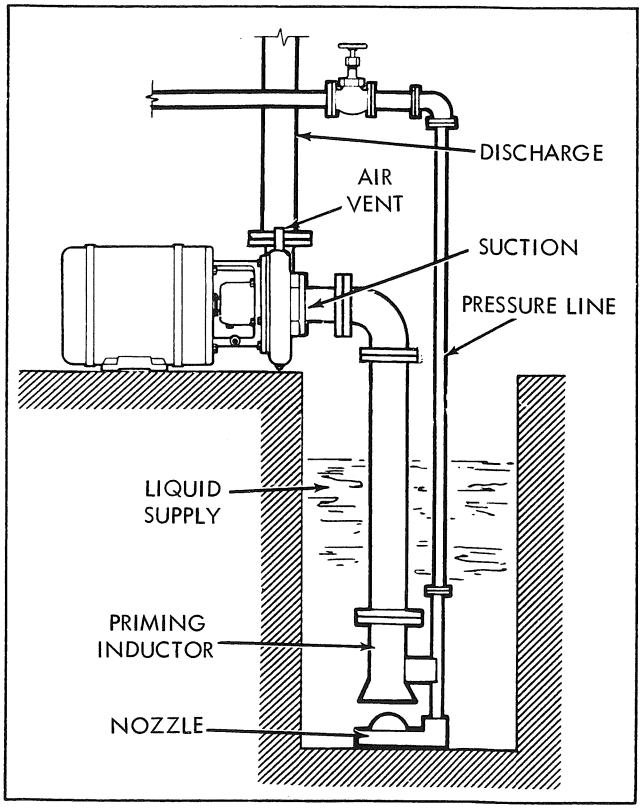

FIGURE 8. INDUCTOR PRIMING

inductor. This type of primer is comprised of a liquid nozzle and an inductor at the foot end of the suction piping. The nozzle and inductor are connected to a high pressure liquid supply such as a city water service.

The pump is primed by opening the valve in the pressure line. This will allow the liquid to flow through the nozzle and into the inductor. The velocity of the high pressure liquid drives the liquid into the suction piping and up to the pump, thus completing the priming operation.

POSITION OF DISCHARGE GATE VALVE WHEN STARTING. The discharge gate valve should partially be closed when a high or medium head centrifugal pump is started, because this type of pump requires much less power with the gate valve closed, than when it is operated at rated capacity and head with the discharge gate valve open. As soon as the pump is up to operating speed, the discharge gate valve should be opened to the desired position.

POSITION OF SUCTION PIPING GATE VALVE. In flooded suction applications, the gate valve is opened at the time the pump is being primed, and will remain open for starting and operation.

COOLANT VALVES. Valves in the cooling liquid line should be opened prior to the pump's being started, and will remain open while the pump is in operation, unless it is desirable to check the rate of leakage from the stuffing box.

SHUTTING DOWN THE PUMP. To shut down your pump, simply close the discharge gate valve and shut down the motor. If it is necessary for the pump to maintain its prime while it is shut down, it is advisable to install either a foot valve or a check valve in the suction piping.

THIS PAGE INTENTIONALLY LEFT BLANK

THIS PAGE INTENTIONALLY LEFT BLANK

WARRANTY

Seller warrants equipment (and its component parts) of its own manufacture against defects in materials and workmanship under normal use and service for one (1) year from the date of installation or start-up, or for eighteen (18) months after the date of shipment, whichever occurs first. Seller does not warrant accessories or components that are not manufactured by Seller; however, to the extent possible, Seller agrees to assign to Buyer its rights under the original manufacturer's warranty, without recourse to Seller. Buyer must give Seller notice in writing of any alleged defect covered by this warranty (together with all identifying details, including the serial number, the type of equipment, and the date of purchase) within thirty (30) days of the discovery of such defect during the warranty period. No claim made more than 30 days after the expiration of the warranty period shall be valid. Guarantees of performance and warranties are based on the use of original equipment manufactured (OEM) replacement parts. Seller assumes no responsibility or liability if alterations, non-authorized design modifications and/or non-OEM replacement parts are incorporated If requested by Seller, any equipment (or its component parts) must be promptly returned to Seller prior to any attempted repair, or sent to an authorized service station designated by Seller, and Buyer shall prepay all shipping expenses. Seller shall not be liable for any loss or damage to goods in transit, nor will any warranty claim be valid unless the returned goods are received intact and undamaged as a result of shipment. Repaired or replaced material returned to customer will be shipped F.O.B., Seller's factory. Seller will not give Buyer credit for parts or equipment returned to Seller, and will not accept delivery of any such parts or equipment, unless Buyer has obtained Seller's approval in writing. The warranty extends to repaired or replaced parts of Seller's manufacture for ninety (90) days or for the remainder of the original warranty period applicable to the equipment or parts being repaired or replaced, whichever is greater. This warranty applies to the repaired or replaced part and is not extended to the product or any other component of the product being repaired. Repair parts of its own manufacture sold after the original warranty period are warranted for a period of one (1) year from shipment against defects in materials and workmanship under normal use and service. This warranty applies to the replacement part only and is not extended to the product or any other component of the product being repaired. Seller may substitute new equipment or improve part(s) of any equipment judged defective without further liability. All repairs or services performed by Seller, which are not covered by this warranty, will be charged in accordance with Seller's standard prices then in effect.

THIS WARRANTY IS THE SOLE WARRANTY OF SELLER AND SELLER HEREBY EXPRESSLY DISCLAIMS AND BUYER WAIVES ALL OTHER WARRANTIES EXPRESSED, IMPLIED IN LAW OR IMPLIED IN FACT, INCLUDING ANY WARRANTIES OF MERCHANTABILITY OR FITNESS FOR A PARTICULAR PURPOSE. Seller's sole obligation under this warranty shall be, at its option, to repair or replace any equipment (or its component parts) which has a defect covered by this warranty, or to refund the purchase price of such equipment or part. Under the terms of this warranty, Seller shall not be liable for (a) consequential, collateral, special or liquidated losses or damages; (b) equipment conditions caused by normal wear and tear, abnormal conditions of use, accident, neglect, or misuse of said equipment; (c) the expense of, and loss or damage caused by, repairs or alterations made by anyone other than the Seller; (d) damage caused by abrasive materials, chemicals, scale deposits, corrosion, lightning, improper voltage, mishandling, or other similar conditions; (e) any loss, damage, or expense relating to or resulting from installation, removal or reinstallation of equipment; (f) any labor costs or charges incurred in repairing or replacing defective equipment or parts, including the cost of reinstalling parts that are repaired or replaced by Seller; (g) any expense of shipment of equipment or repaired or replacement parts; or (h) any other loss, damage or expense of any nature.

The above warranty shall not apply to any equipment which may be separately covered by any alternate or special warranties.

PERFORMANCE: In the absence of Certified Pump Performance Tests, equipment performance is not warranted or guaranteed. Performance curves and other information submitted to Buyer are approximate and no warranty or guarantee shall be deemed to arise as a result of such submittal. All testing shall be done in accordance with Seller's standard policy under Hydraulic Institute procedures.

LIABILITY LIMITATIONS: Under no circumstances shall the Seller have any liability under the Order or otherwise for liquidated damages or for collateral, consequential or special damages or for loss of profits, or for actual losses or for loss of production or progress of construction, regardless of the cause of such damages or losses. In any event, Seller's aggregate total liability under the Order or otherwise shall not exceed the contract price.

ACTS OF GOD: Seller shall in no event be liable for delays in delivery of the equipment or other failures to perform caused by fires, acts of God, strikes, labor difficulties, acts of governmental or military authorities, delays in transportation or procuring materials, or causes of any kind beyond Seller's control.

COMPLIANCE WITH LAW: Seller agrees to comply with all United States laws and regulations applicable to the manufacturing of the subject equipment. Such compliance shall include: The Fair Labor Standards Acts of 1938, as amended; Equal Employment Opportunity clauses of Executive Order 11246, as amended; Occupational Safety and Health Act of 1970 and the standards promulgated thereunder, if applicable. Since compliance with the various Federal, State, and Local laws and regulations concerning occupational health and safety, pollution or local codes are affected by the use, installation and operation of the equipment and other matters over which Seller has no control, Seller assumes no responsibility for compliance with those laws and regulations, whether by way of indemnity, warranty, or otherwise. It is incumbent upon the Buyer to specify equipment which complies with local codes and ordinances.

AURORA®
800 Airport Road
North Aurora, Illinois 60542
630-859-7000
www.aurorapump.com

PENTAIR

AURORA®

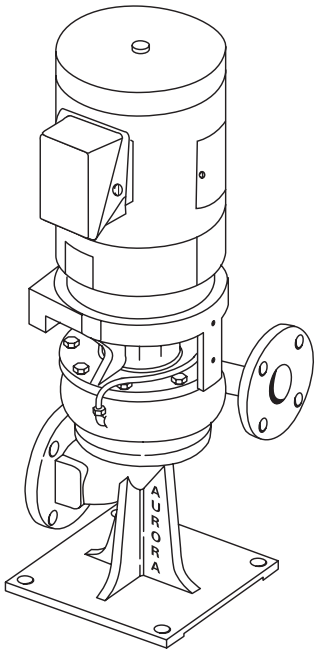

MODEL 342A

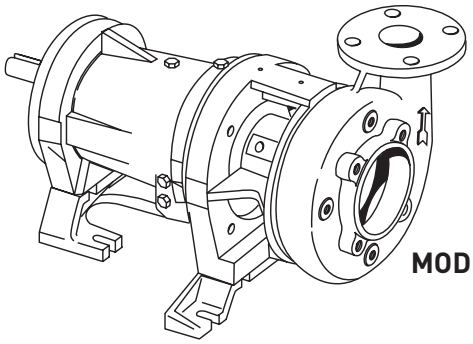

MODEL 344A

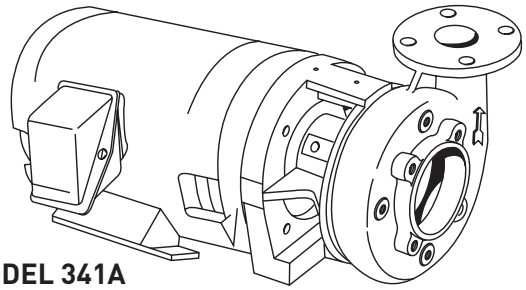

MODEL 341A

MODELS 341A, 342A and 344A
SINGLE STAGE END SUCTION PUMPS
INSTRUCTION AND REPAIR MANUAL

NOTE! To the installer: Please make sure you provide this manual to the owner of the equipment or to the responsible party who maintains the system.

Part # A-03-279 | © 2012 Pentair Ltd. | 12/03/12

NOTE

This repair manual is applicable to pump Models 341A, 342A and 344A. All photos illustrate Model 344A.

ATTENTION: SAFETY WARNINGS:

Read and understand all warnings before installation or servicing pump.

CALIFORNIA PROPOSITION 65 WARNING:

Warning: This product and related accessories contain chemicals known to the State of California to cause cancer, birth defects or other reproductive harm.

OPERATIONAL LIMITS: *

Maximum Operating Pressure:	175 psi at Temperatures to 150°F (65.6°C)
Maximum Operating Temperature:	225°F (107°C)

* See ASTM A126/ANSI B16.1 for pressure/temperature ratings of flanges.

ELECTRICAL SAFETY:

Warning: Electrical Shock Hazard

All electrical connections are to be made by a qualified electrician in accordance with all codes and ordinances. Failure to follow these instructions could result in serious personal injury, death or property damage.

Warning: Electrical Overload Hazard

Insure all motors have properly sized overload protection. Failure to follow these instructions could result in serious personal injury, death or property damage.

Warning: Sudden Start-Up Hazard

Disconnect and lockout power source before servicing. Failure to follow these instructions could result in serious personal injury, death or property damage.

HIGH TEMPERATURE SAFETY:

Warning: Hot Surface Hazard

If pumping hot water, insure guards or proper insulation is installed to protect against skin contact to hot piping or pump components. Failure to follow these instructions could result in serious personal injury, death or property damage.

Warning: Spraying Water Hazard

When servicing pump replace all gaskets and seals. Do not re-use old gaskets or seals. Failure to follow these instructions could result in serious personal injury, death or property damage.

HIGH PRESSURE SAFETY:

Warning: High Pressure Hazard

The pump is rated at a maximum of 175 psi at 150°F. Do not exceed this pressure. Install properly sized pressure relief valves in system. Failure to follow these instructions could result in serious personal injury, death or property damage.

Warning: Expansion Hazard

Water expands when heated. Install properly sized thermal expansion tanks and relief valves. Failure to follow these instructions could result in serious personal injury, death or property damage.

SERVICE

Your Aurora pump requires no maintenance other than periodic inspection, occasional cleaning and lubrication of bearings (MODEL 344A only). The intent of inspection is to prevent breakdown, thus obtaining optimum service life. The liquid end of the pump is lubricated by the fluid being pumped and therefore does not require periodic lubrication. The motor, however may require lubrication, in which case, the motor manufacturer's recommendation should be followed.

LUBRICATION OF IMPELLER SHAFT BEARINGS

The MODEL 344A pump is available with three options for lubricating the shaft bearings. They are:

1. Regreasable (standard)
2. Oil Lubrication
3. Sealed Bearings, Permanent Lubrication

Regreasable bearings will require periodic lubrication and can be accomplished by using the zerk or lubrication fittings in the cartridge cap and power frame. Lubricate the bearings at regular intervals using a grease of high quality. Polyurea base grease is recommended as lubricants for pumps operating in both wet and dry locations. Mixing of different brands of grease should be avoided due to possible chemical reactions between the brands which could damage the bearings. Accordingly, avoid grease of vegetable or animal base which can develop acids, as well as grease containing rosin, graphite, talc and other impurities. Under no circumstances should used grease be reused.

Over lubrication should be avoided as it may result in overheating and possible bearing failure. Under normal application, adequate lubrication is assured if the amount of grease is maintained at 1/3 to 1/2 the capacity of the bearing and adjacent space surrounding it.

In dry locations, each bearing will need lubrication at least every 600 hours of running time or every 6 to 12 months, whichever is more frequent. In wet locations the bearings should be lubricated at least after every 300 hours of running time or every 4 to 6 months, whichever is more frequent. A unit is considered to be installed in a wet location if the pump and motor are exposed to dripping water, to the weather, or to heavy condensation such as is found in unheated and poorly ventilated underground locations.

Oil lubricated bearings are optional on MODEL 344 pumps. A fixed oil level is maintained with the power frame by an oiler which allows visual indications of reserve oil.

At initial installation and before starting a unit that has been shut down for repairs or for any extended length of time, run enough 10W-30 weight motor oil through the oiler to maintain a constant oil level to insure that the bearing will never be without an oil supply. Oil will have to be added at intervals to maintain a constant level in the oiler. This interval can only be determined by experience.

Under working conditions, oil will breakdown and need to be replaced at regular intervals. The length of these intervals will depend on many factors. Under normal operation, in clean and dry locations, the oil should be changed about once a year. However, when the pump is exposed to dirt contamination, high temperatures (200°F. or above) or a wet location, the oil may have to be changed every 2 to 3 months.

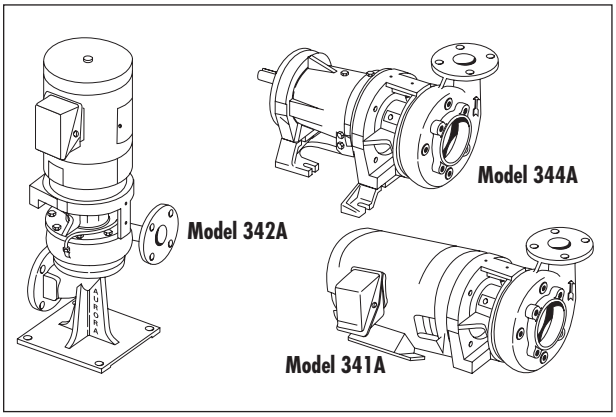

A. Assembled Units.

CAUTION

Use normal fire caution procedures when using any petroleum cleaner.

REPAIRS

Before starting any work, insure the electrical power is locked out, the system pressure has been lowered to 0 psi and temperature of the unit is at a safe level.

The pump may be disassembled using the illustrations and text provided. Although complete disassembly is covered, it will seldom be necessary to completely disassemble your Aurora pump.

The illustrations accompanying the disassembly instructions show the pump at various stages of disassembly. The illustrations are intended to aid in the correct identification of the parts mentioned in the text.

Inspect removed parts at disassembly to determine if they can be reused. Ball bearings that turn roughly or show wear should be replaced. Cracked castings should never be reused. Scored or worn pump shafts should be replaced. Gaskets should be replaced at reassembly simply as a matter of economy. They are much less expensive to replace routinely than to replace singly as the need arises.

Warning: Sudden Start-Up Hazard

Disconnect and lockout power source before servicing. Failure to follow these instructions could result in serious personal injury, death or property damage.

Warning: Hot Surface Hazard

If pumping hot water, insure guards or proper insulation is installed to protect against skin contact to hot piping or pump components. Failure to follow these instructions could result in serious personal injury, death or property damage.

Warning: High Pressure Hazard

The pump is rated at a maximum of 175 psi at 150°F. Do not exceed this pressure. Install properly sized pressure relief valves in system. Failure to follow these instructions could result in serious personal injury, death or property damage.

Warning: Spraying Water Hazard

When servicing pump replace all gaskets and seals. Do not re-use old gaskets or seals. Failure to follow these instructions could result in serious personal injury, death or property damage.

DISASSEMBLY

Disassemble only what is needed to make repairs or accomplish inspection. (See Figure 2 for Model 341A, Figure 3 for Model 342A and Figure 3 for Model 344A.)

1. Disconnect and lockout power source to prevent drive unit from being energized during disassembly.

2. Unscrew the two drain plugs (4) from the casing (6). On Model 342A pumps, remove plugs (74 and 75) to drain pump. Also unscrew the two plugs (4) from casing (6).

3. Remove all relief, cooling, flushing or drain lines from pump, including compression connections (1 and 2) and tubing (3). Break suction and discharge connections unless it is intended to remove the power frame or motor assembly and leave casing (6) in the line. On Model 342A pumps, break discharge connections only, unless it is desired to remove base (73). Remove capscrews (39) and lift pump assembly from base (73). Remove gasket (72).

4. On Model 344A pumps, remove the flexible coupling from between the pump and motor. Next unscrew the bolts that hold support(s) (41 and 64) to the base and slide the pump out to be worked on.

5. Remove capscrews (5) and pull casing (6) from bracket (35). Remove gasket (8).

6. Unscrew impeller screw (9) and remove washer (9A), taking care not to damage gasket (9B) or capscrew seal (9C).

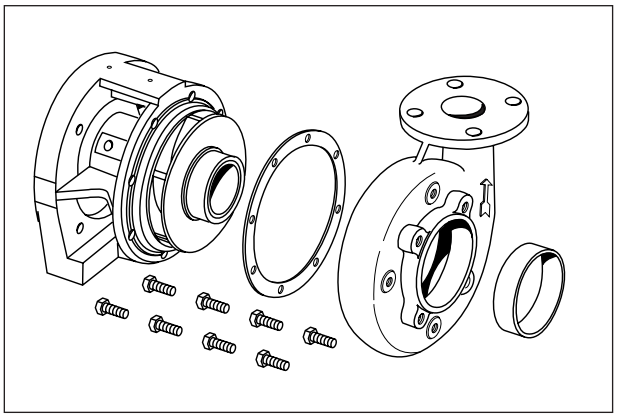

B. Casing, Gasket, and Wearing Ring Removed.

7. Slide impeller (11) and impeller key (12) from the shaft, again taking care not to damage gasket (10) located behind impeller. Remove gasket (10).

8. Wearing ring(s) (7 and 16) are pressed into their housings with an interface fit and must be removed with a puller. New ring(s) should be used for reassembly since it is likely that during removal this fit will be lost. Do not remove wearing rings if not being replaced.

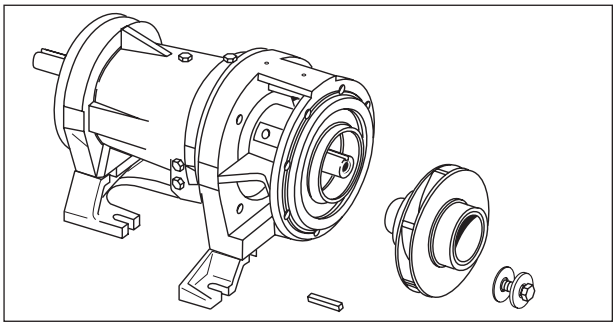

C. Impeller and Key Removed.

9. Impeller wearing rings (optional - 14 and 15) are pressed on and must be cut off if replacement is necessary. If they are turned off in a lathe, take care not to cut into the impeller.

10. Slide sleeve (25) with rotating parts of mechanical seal (27) from the shaft. The sleeve should be carefully cleaned to remove any residue that may be remaining in the seal area. The rubber in seal (27) may have become partially adhered to the sleeve. The sleeve must also be checked for abrasion or corrosion that can occur when fluid residue penetrates between the seal (27) and sleeve (25). The sleeve under the seal may be polished lightly to a 32 RMS finish before reassembly. Do not reuse a pitted sleeve. Pin (61) may be removed if necessary.

CAUTION

The mechanical seal (see Figure 1) is a precision product and must be treated as such. During removal, great care must be taken to avoid dropping any part of the seal. Take particular care not to scratch the lapped faces on the washer or the sealing seat. If any wear of the seal faces is noted, it is recommended to replace with a new seal during reassembly.

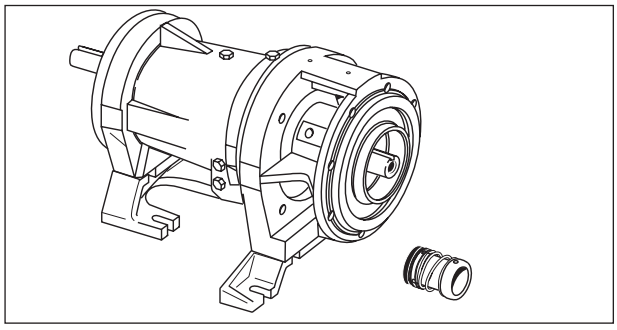

D. Mechanical Seal Removed.

11. On Model 344A pumps, remove capscrews (39 and 62) and washers (40 and 63) to take off support feet (41 and 64). On Model 341A frame size 143 thru 184-JM only, unscrew capscrews (39) washers (40) and remove support (41) from bracket (35).

12. Unscrew capscrews (32) to remove bracket (35) from frame (57) or motor on Models 341A and 342A.

13. The seal flexible cup and stationary seat should be pressed out of the bracket (35) and the cavity cleaned of all residue. Make sure that the 1/32 inch radius in the seal seat cavity is not damaged during disassembly since a sharp edge can easily cut the flexible cup during reassembly.

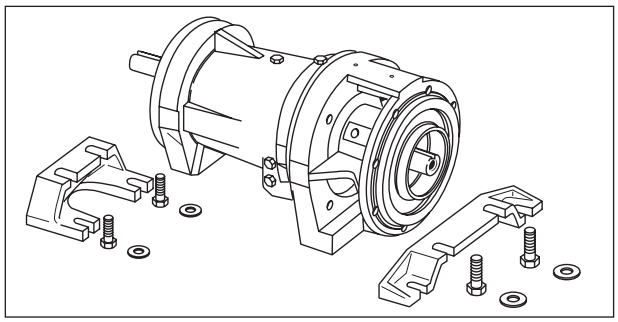

E. Support Feet Removed.

14. On Model 344A pumps, remove key (42) from the shaft and remove slingers (47 and 47A).

15. Unscrew capscrews (48) and remove bearing cap (49). Remove "O" ring (oil lubed only) (50) and retainer ring (52).

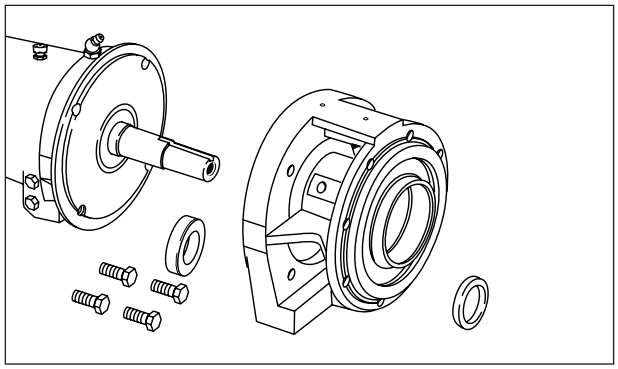

F. Bracket and Slinger Seal Flexible Cup and Stationary Seat Removed.

16. Slide out shaft (55) and bearings (53 and 54). Since bearings (53 and 54) are press fitted on the shaft, they will have to be pulled or pressed off the shaft. Remove grease seals (51) from frame (57), and bearing cap (49).

17. Remove nameplate (34) and screws (33) only if replacement is needed.

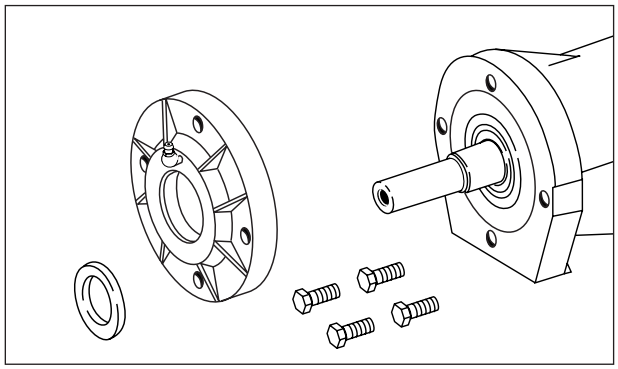

G. Bearing Cap and Slinger Removed.

REASSEMBLY

Reassembly will generally be in reverse order of disassembly. If disassembly was not complete, use only those steps related to your particular repair program.

1. Press grease seals (51) into frame (57). (344A)

2. Press bearings (53 and 54) onto shaft (55). Snap retainer ring (52) into place. (344A)

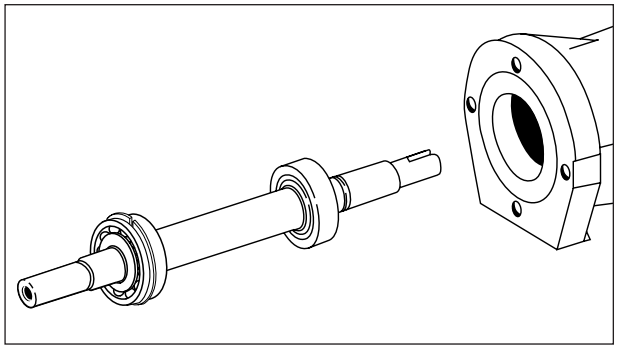

H. Shaft Assembly Removed.

3. Slide shaft (55) and bearings (53 and 54) into frame (57) until retainer ring on bearing (54) comes in contact with frame (57). Place "O" ring (oil lubed only) (50) in place. (344A)

4. Fasten bearing cap (49) in position with capscrews (48). Insert grease seals (51A) and position slingers (47 and 47A) on the shaft. (344A)

5. The mechanical seal (27) (see Figure 1) cannot be installed as an assembly. It is necessary to have the seal seat properly in place in bracket (35) before the balance of parts can be added.

   Thoroughly inspect the seal cavity in seal bracket, checking for burrs or nicks which could damage flexible cup of mechanical seal. Apply a film of liquid dishwashing detergent (do not use oil or grease) to the flexible cup and seal seat. Insert seat in cup and install in seal bracket, taking care to seat it evenly and squarely.

   NOTE

   If it is not possible to insert seat with fingers, place the cardboard protecting ring furnished with seal over lapped face of seat and press into place with a piece of tubing having end cut square. Tubing should be slightly larger than the diameter of the shaft. Remove cardboard after seat is firmly seated.

6. On Model 344A pumps, mount bracket (35) by screwing capscrews (32) evenly into frame (57) to assure proper alignment. Turn all capscrews in an even amount. Fasten the bracket and frame to supports (41 and 64) by placing washers (40 and 63) over capscrews (39 and 62) and screwing them into position.

   On Model 341A and 342A pumps position bracket (35) on the motor and secure with capscrews (32). Tighten screws evenly to assure proper alignment.

Secure support (41) to bracket (35) with capscrews (39) and washers (40). Frame sizes 143 thru 184-JM Model 341A only.

7. If nameplate (34) was removed, install and attach with screws (33).

8. Wipe the sealing faces of the seat and seal washer clean. Replace pin (61) in sleeve if it was removed during disassembly. Apply a film of liquid dishwashing detergent to the washer and bellows of the seal and slide the remaining seal parts onto the sleeve making sure the washer is seated against the seal seat. Check the proper sequence of assembly as indicated in Figure 1. The shaft sleeve with the seal rotating assembly on it may now be replaced onto the motor shaft. Spring tension will probably prevent the sleeve from remaining in position axially until the impeller is locked against it.

9. Press wearing ring(s) (7 and 16) in casing (6) and bracket (35). Rings should not be hammered into place. Use a press, or clamp the parts in a bench vise, using wooden blocks to protect the rings. It may be necessary to pin or dowel the rings after assembly if the insert or casing has had rings replaced before, since each reassembly can stretch or tear metal and thereby loosen the fits. If the facilities are available, it is good practice to take a very light finish cut or to ream the inside diameter of the casing rings after pressing to restore roundness. When rings are pressed, they may get squeezed out of shape.

10. Coat the mating surfaces of impeller wear ring(s) (optional - 14 and 15) and impeller (11) with Locktite sealant grade 271. Replace wear rings, using the same care as for the case wear ring(s). If the rings are to be trued on a lathe, do not clamp the impeller so tightly that it is permanently distorted.

11. Carefully replace gasket (10) on motor end of impeller. Assembly key (12) and impeller (11) to motor shaft. Secure impeller with gasket (9B), washer (9A), capscrew seal (9C) and impeller screw (9).

12. Install the two pipe plugs (4) in the pump casing. Position the gasket (8) and casing (6) against the motor bracket and secure with screws (5). On Model 342A pumps position gasket (72) and set pump assembly in place. Tighten pump to base (73) with capscrews (39).

13. Replace all relief, cooling, flushings, or drain lines from the pump including compression connections (1 and 2) and tubing (3). Replace all grease fittings pipe plugs, tube vents and oiler assembly for oil lubricated units. Connect discharge piping and suction piping, if required. Make sure to install gaskets on the flanged connections. On Model 342A pumps replace plugs (74 and 75) in base elbow (73).

14. Read carefully the section of the manual titled INSTALLATION, especially those paragraphs referring to pump and coupling alignment.

15. Connect electricity to the motor.

STARTING PUMP AFTER REASSEMBLY

Do not start pump until all air and vapor has been bled and until making sure that there is liquid in the pump to provide the necessary lubrication. Without the fluid around it, the seal may be ruined in a few seconds of operation. It is possible that the mechanical seal may drip during the first few minutes to one hour of operation.

Warning: Hot Surface Hazard

If pumping hot water, insure guards or proper insulation is installed to protect against skin contact to hot piping or pump components. Failure to follow these instructions could result in serious personal injury, death or property damage.

Warning: Spraying Water Hazard

When servicing pump replace all gaskets and seals. Do not re-use old gaskets or seals. Failure to follow these instructions could result in serious personal injury, death or property damage.

Warning: Electrical Shock Hazard

All electrical connections are to be made by a qualified electrician in accordance with all codes and ordinances. Failure to follow these instructions could result in serious personal injury, death or property damage.

Warning: Electrical Overload Hazard

Insure all motors have properly sized overload protection. Failure to follow these instructions could result in serious personal injury, death or property damage.

Warning: Sudden Start-Up Hazard

Disconnect and lockout power source before servicing. Failure to follow these instructions could result in serious personal injury, death or property damage.

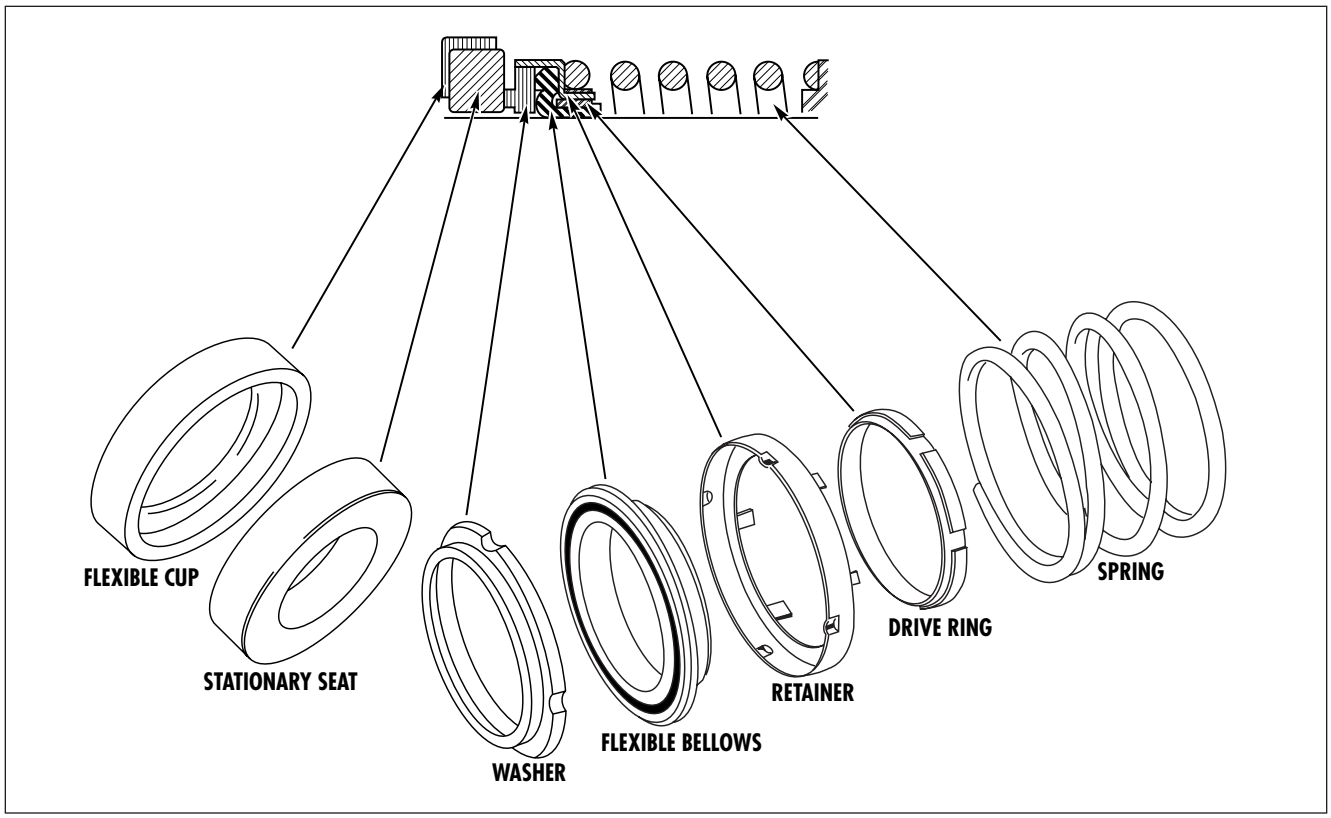

Figure 1. Mechanical Seal

MODEL 341A LIST OF PARTS

1. Elbow
2. Connector
3. Tubing
4. Plug, Pipe
5. Capscrew
6. Casing
7. Wear Ring
8. Gasket
9. Impeller Screw
9A. Washer
9B. Gasket
9C. Capscrew Seal
10. Gasket
11. Impeller
12. Impeller Key
14. Wear Ring
15. Wear Ring
16. Wear Ring
25. Sleeve
27. Seal
32. Capscrew
33. Screw
34. Nameplate
35. Bracket
39. Capscrew
40. Washer
41. Support
61. Pin

MODEL 342A LIST OF PARTS

1. Elbow
2. Connector
3. Tubing
4. Plug, Pipe
5. Capscrew
6. Casing
7. Wear Ring
8. Gasket
9. Impeller Screw
9A. Washer
9B. Gasket
9C. Capscrew Seal
10. Gasket
11. Impeller
12. Impeller Key
14. Wear Ring
15. Wear Ring
16. Wear Ring
25. Sleeve
27. Seal
32. Capscrew
33. Screw
34. Nameplate
35. Bracket
39. Capscrew
61. Pin
72. Gasket
73. Base
74. Plug, Pipe
75. Plug, Pipe

MODEL 344A LIST OF PARTS

1. Elbow
2. Connector
3. Tubing
4. Plug, Pipe
5. Capscrew
6. Casing
7. Wear Ring
8. Gasket
9. Impeller Screw
9A. Washer
9B. Gasket
9C. Capscrew Seal
10. Gasket
11. Impeller
12. Impeller Key
14. Wear Ring
15. Wear Ring
16. Wear Ring
25. Sleeve
27. Seal
32. Capscrew
33. Screw
34. Nameplate
35. Bracket
39. Capscrew
40. Washer
41. Support
42. Key
43. Grease Fitting
44. Tube, Vent
46. Plug, Pipe
47. Slinger
47A. Slinger
48. Capscrew
49. Bearing Cap
50. O-Ring
51. Seal
51A. Seal
52. Retaining Ring
53. Bearing
54. Bearing
55. Shaft
56. Plug, Pipe
57. Frame
58. Grease Fitting
59. Plug, Pipe
60. Oiler Assembly
61. Pin
62. Capscrew
63. Washer
64. Support

NOTES:

1. BRONZE FITTED CONSTRUCTION WILL BE FURNISHED AS STANDARD UNLESS SPECIFIED.
2. REFER TO FACTORY FOR SPECIAL ALLOYS.
3. AURORA PUMP RESERVES THE RIGHT TO SUBSTITUTE MATERIALS WITHOUT NOTICE
4. PIECE NUMBERS 14 AND 15 ARE NOT FURNISHED AS STANDARD, WHEN FURNISHED, IMPELLER MUST BE MODIFIED.
5. PIECE NUMBERS 39, 40, 41 USED ONLY WITH MOTOR FRAMES 143 THRU 184-JM ON MODEL 341A PUMPS.

NOTE

WHEN ORDERING SPARE PARTS ALWAYS INCLUDE THE PUMP TYPE, SIZE, SERIAL NUMBER, AND THE PIECE NUMBER FROM THE EXPLODED VIEW IN THIS MANUAL.

ORDER ALL PARTS FROM YOUR LOCAL AUTHORIZED DISTRIBUTOR, FACTORY BRANCH SALES OFFICE OR THE FACTORY AT NORTH AURORA, ILLINOIS.

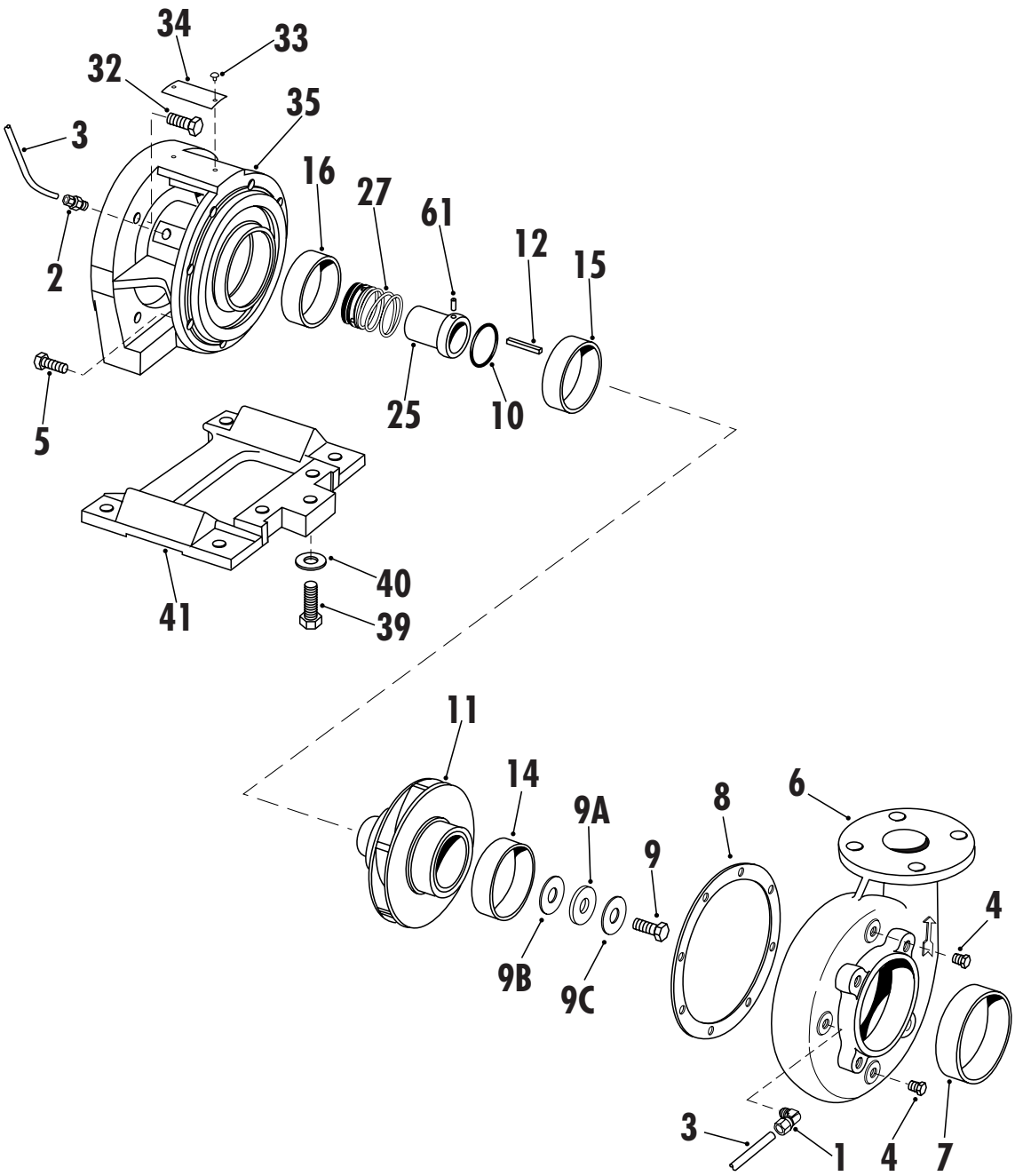

Figure 2. Model 341A Exploded View

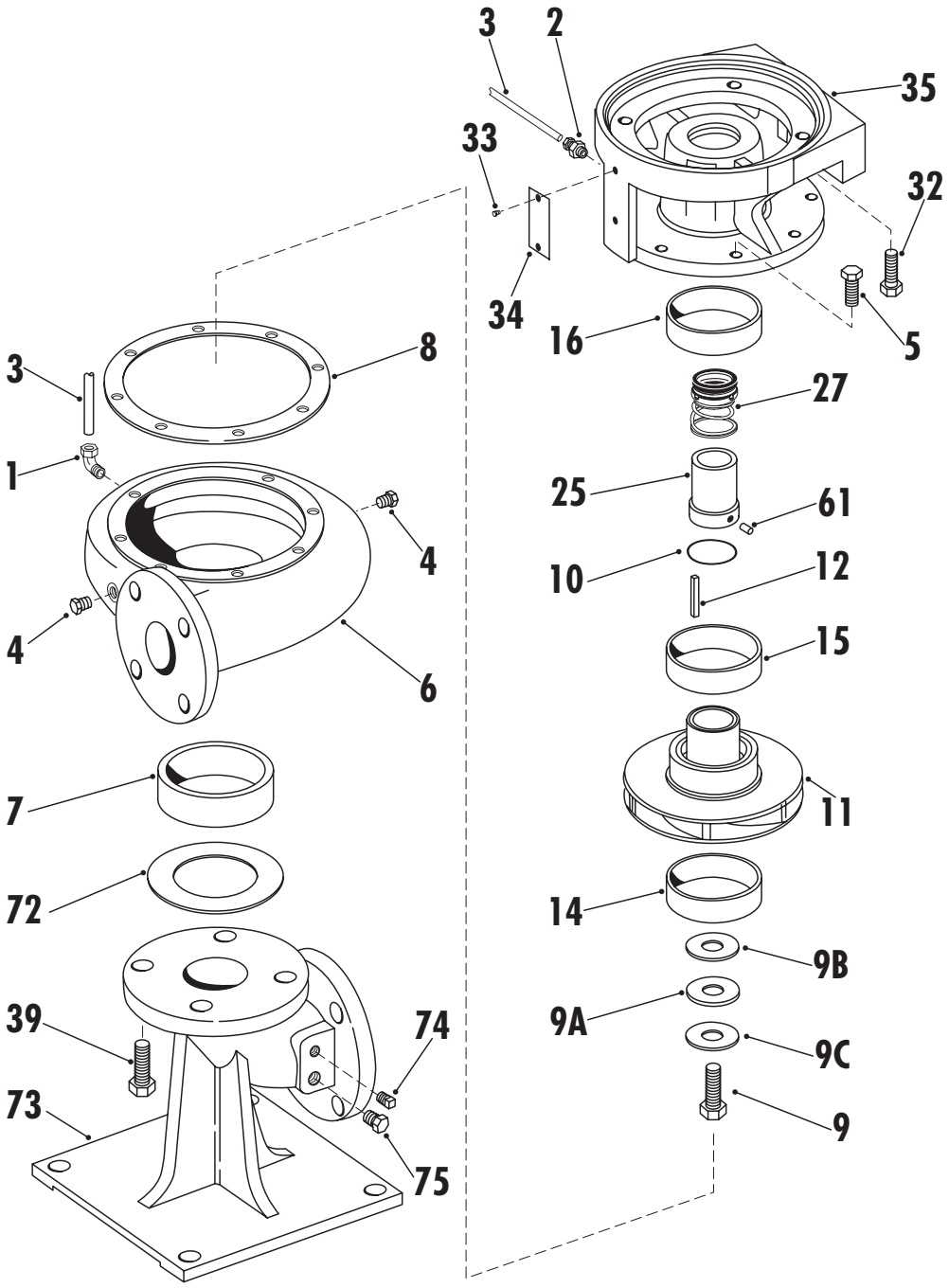

Figure 3. Model 342A Exploded View

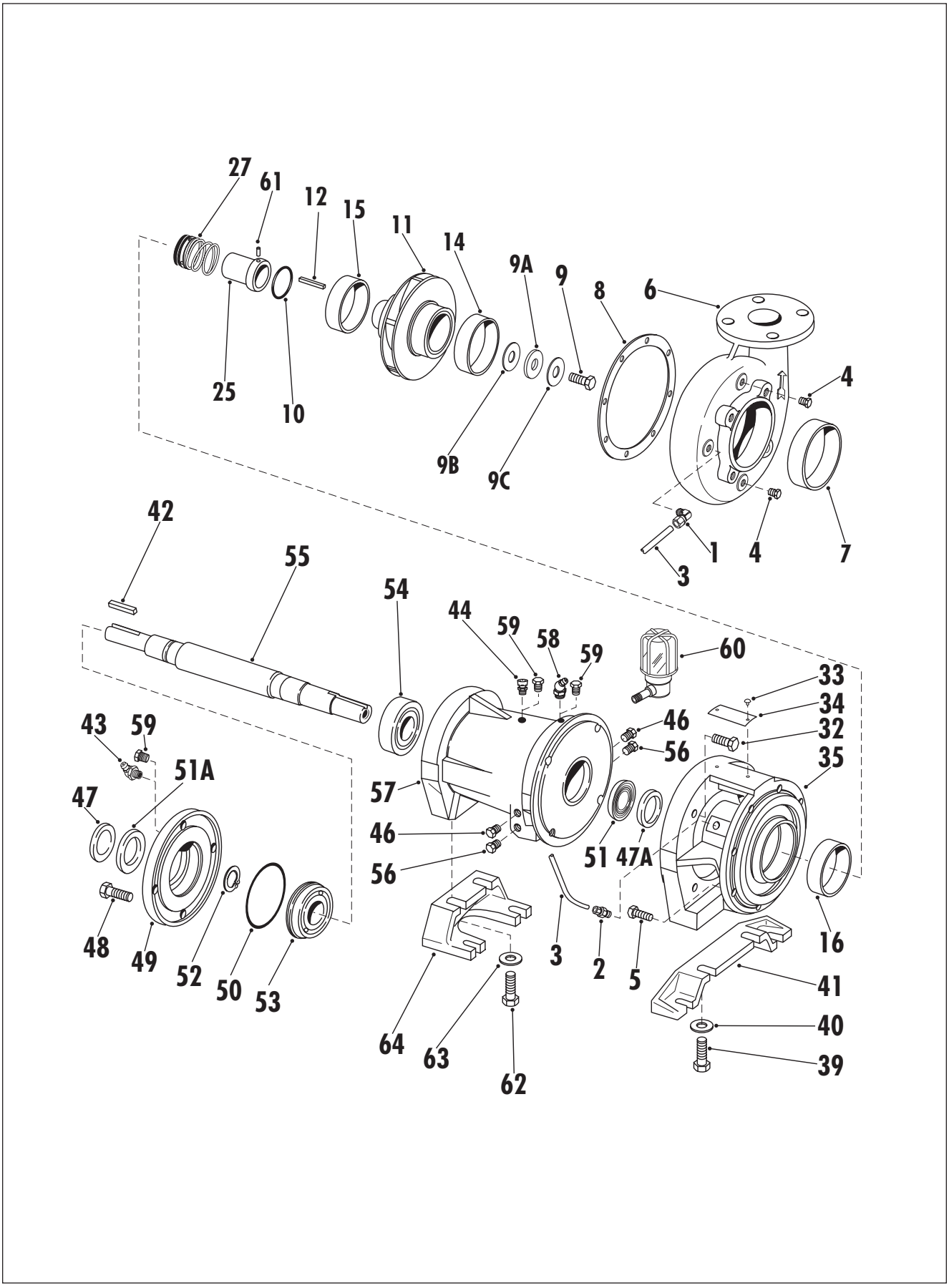

Figure 4. Model 344A Exploded View

WARRANTY

Seller warrants equipment (and its component parts) of its own manufacture against defects in materials and workmanship under normal use and service for one (1) year from the date of installation or start-up, or for eighteen (18) months after the date of shipment, whichever occurs first. Seller does not warrant accessories or components that are not manufactured by Seller; however, to the extent possible, Seller agrees to assign to Buyer its rights under the original manufacturer's warranty, without recourse to Seller. Buyer must give Seller notice in writing of any alleged defect covered by this warranty (together with all identifying details, including the serial number, the type of equipment, and the date of purchase) within thirty (30) days of the discovery of such defect during the warranty period. No claim made more than 30 days after the expiration of the warranty period shall be valid. Guarantees of performance and warranties are based on the use of original equipment manufactured (OEM) replacement parts. Seller assumes no responsibility or liability if alterations, non-authorized design modifications and/or non-OEM replacement parts are incorporated If requested by Seller, any equipment (or its component parts) must be promptly returned to Seller prior to any attempted repair, or sent to an authorized service station designated by Seller, and Buyer shall prepay all shipping expenses. Seller shall not be liable for any loss or damage to goods in transit, nor will any warranty claim be valid unless the returned goods are received intact and undamaged as a result of shipment. Repaired or replaced material returned to customer will be shipped F.O.B., Seller's factory. Seller will not give Buyer credit for parts or equipment returned to Seller, and will not accept delivery of any such parts or equipment, unless Buyer has obtained Seller's approval in writing. The warranty extends to repaired or replaced parts of Seller's manufacture for ninety (90) days or for the remainder of the original warranty period applicable to the equipment or parts being repaired or replaced, whichever is greater. This warranty applies to the repaired or replaced part and is not extended to the product or any other component of the product being repaired. Repair parts of its own manufacture sold after the original warranty period are warranted for a period of one (1) year from shipment against defects in materials and workmanship under normal use and service. This warranty applies to the replacement part only and is not extended to the product or any other component of the product being repaired. Seller may substitute new equipment or improve part(s) of any equipment judged defective without further liability. All repairs or services performed by Seller, which are not covered by this warranty, will be charged in accordance with Seller's standard prices then in effect.

THIS WARRANTY IS THE SOLE WARRANTY OF SELLER AND SELLER HEREBY EXPRESSLY DISCLAIMS AND BUYER WAIVES ALL OTHER WARRANTIES EXPRESSED, IMPLIED IN LAW OR IMPLIED IN FACT, INCLUDING ANY WARRANTIES OF MERCHANTABILITY OR FITNESS FOR A PARTICULAR PURPOSE. Seller's sole obligation under this warranty shall be, at its option, to repair or replace any equipment (or its component parts) which has a defect covered by this warranty, or to refund the purchase price of such equipment or part. Under the terms of this warranty, Seller shall not be liable for (a) consequential, collateral, special or liquidated losses or damages; (b) equipment conditions caused by normal wear and tear, abnormal conditions of use, accident, neglect, or misuse of said equipment; (c) the expense of, and loss or damage caused by, repairs or alterations made by anyone other than the Seller; (d) damage caused by abrasive materials, chemicals, scale deposits, corrosion, lightning, improper voltage, mishandling, or other similar conditions; (e) any loss, damage, or expense relating to or resulting from installation, removal or reinstallation of equipment; (f) any labor costs or charges incurred in repairing or replacing defective equipment or parts, including the cost of reinstalling parts that are repaired or replaced by Seller; (g) any expense of shipment of equipment or repaired or replacement parts; or (h) any other loss, damage or expense of any nature.

The above warranty shall not apply to any equipment which may be separately covered by any alternate or special warranties.

PERFORMANCE: In the absence of Certified Pump Performance Tests, equipment performance is not warranted or guaranteed. Performance curves and other information submitted to Buyer are approximate and no warranty or guarantee shall be deemed to arise as a result of such submittal. All testing shall be done in accordance with Seller's standard policy under Hydraulic Institute procedures.

LIABILITY LIMITATIONS: Under no circumstances shall the Seller have any liability under the Order or otherwise for liquidated damages or for collateral, consequential or special damages or for loss of profits, or for actual losses or for loss of production or progress of construction, regardless of the cause of such damages or losses. In any event, Seller's aggregate total liability under the Order or otherwise shall not exceed the contract price.

ACTS OF GOD: Seller shall in no event be liable for delays in delivery of the equipment or other failures to perform caused by fires, acts of God, strikes, labor difficulties, acts of governmental or military authorities, delays in transportation or procuring materials, or causes of any kind beyond Seller's control.

COMPLIANCE WITH LAW: Seller agrees to comply with all United States laws and regulations applicable to the manufacturing of the subject equipment. Such compliance shall include: The Fair Labor Standards Acts of 1938, as amended; Equal Employment Opportunity clauses of Executive Order 11246, as amended; Occupational Safety and Health Act of 1970 and the standards promulgated thereunder, if applicable. Since compliance with the various Federal, State, and Local laws and regulations concerning occupational health and safety, pollution or local codes are affected by the use, installation and operation of the equipment and other matters over which Seller has no control, Seller assumes no responsibility for compliance with those laws and regulations, whether by way of indemnity, warranty, or otherwise. It is incumbent upon the Buyer to specify equipment which complies with local codes and ordinances.

PENTAIR

AURORA®
800 Airport Road
North Aurora, Illinois 60542
630-859-7000
www.aurorapump.com

PENTAIR

AURORA®

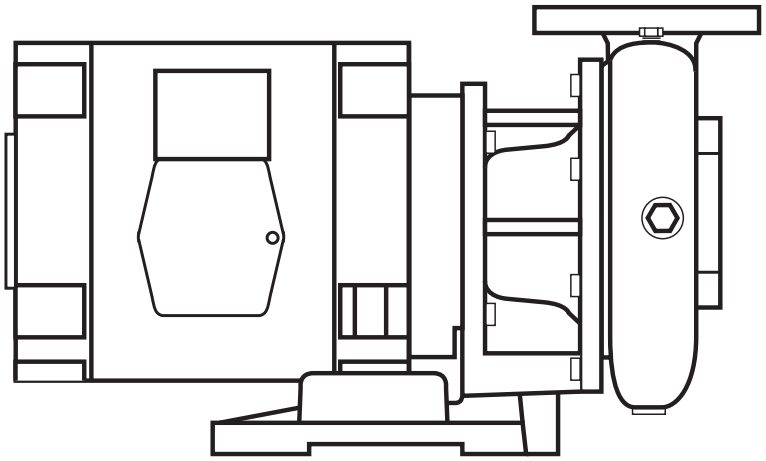

340A SERIES

REPAIR PARTS INDEX

NOTE! Read and understand the pump and motor instructions before attempting to install, disassemble or repair the pump.

Part # A-03-216 | © 2014 Pentair Ltd. | 03/18/14

AURORA® 340A SERIES REPAIR PARTS INDEX

TABLE OF CONTENTS

PUMP MODEL	DESCRIPTION	PAGE
340A Series	Repair Parts Index	3
341A	Horizontal Close Coupled Exploded view and piece numbers	4
342A	Vertical Close Coupled Exploded view and piece numbers	5
344A	Horizontal Power Frame Mounted Exploded view and piece numbers	6

PUMP SIZE	PAGE
1-1/4 x 1-1/2 x 7 through 4 x 4 x 7B Part Numbers	7 – 9
1-1/4 x 1-1/2 x 9B through 6 x 6 x 9 Part Numbers	10 – 12
1-1/2 x 2 x 11 through 6 x 6 x 11A Part Numbers	13 – 15
1-1/2 x 2 x 12 through 6 x 6 x 12A Part Numbers	16 – 18

Refer to Notes 1 and 2 for Models 341A and 342A Close Coupled Pumps.

NOTES:

1) Part numbers 9, 10, 11, 12, 25 and 27 are listed with a letter **(S)** or **(L)** indicating the small or large shaft used to build the 340A series pumps.

2) To determine when to use **(S)** or **(L)** parts, in addition to the pump size, it is also necessary to have the close coupled motor frame number for 341A and 342A pumps. Motor frame 215JM and smaller use **(S)** parts. Motor frame 254JM and larger use **(L)** parts.

3) For 344A power frame assignment, refer to chart at left.

4) Liquid end maintenance kits may be found on pages 8, 11, 14 and 17 of this manual or in the current repair part kits manual.

5) Casings and brackets for pumps manufactured prior to 4/76 are no longer available for models 341, 342 and 344. Both the current bracket and casing are required for these older pumps if a replacement is required.

6) Part numbers are shown for bronze fitted and all iron pumps. Standard fitted pumps are the same as bronze fitted except that the impeller only is cast iron rather than bronze.

© 2014 Pentair Ltd.

REPAIR PARTS INDEX

THIS CHART FOR USE WITH **MODEL 344A PUMPS ONLY** TO DETERMINE POWER FRAME SIZE BASED ON THE PUMP SIZE AND OPERATING SPEED.

PUMP SIZE	3500	1750	1150
1-1/4 x 1-1/2 x 7	1	1	-
1-1/4 x 1-1/2 x 9B	-	1	-
1-1/2 x 2 x 7	1	1	-
1-1/2 x 2 x 9A	-	1	-
1-1/2 x 2 x 9B	-	1	-
1-1/2 x 2 x 9C	2	1	-
1-1/2 x 2 x 11	3	2	2
1-1/2 x 2 x 12	-	2	2
2 x 2-1/2 x 7A	2	1	-
2 x 2-1/2 x 7B	1	1	-
2 x 2-1/2 x 9	3	1	-
2 x 2-1/2 x 12	-	2	2
2 x 3 x 11	-	2	2
2-1/2 x 3x 7A	1	1	-
2-1/2 x 3 x 7B	2	1	-
2-1/2 x 3 x 9	3	1	-
2-1/2 x 3 x 12	-	2	2
3 x 4 x 9A	3	1	-
3 x 4 x 9B	3	1	-
3 x 4 x 11	-	2	2
3 x 4 x 12	-	3	2
4 x 4 x 7A	2	1	-
4 x 4 x 7B	2	1	-
4 x 5 x 9A	3	2	-
4 x 5 x 9B	-	2	-
4 x 5 x 11	-	2	2
4 x 5 x 12	-	3	2
5 x 6 x 11	-	3	2
5 x 6 x 12	-	3	2
6 x6 x9	-	2	2
6 x 6 x 11	-	3	2
6 x 6 x 11A	-	3	2
6 x 6 x 12	-	3	3
6 x 6 x 12A	-	3	-

Power Frame #1 – use **(S)** parts.
Power Frame #2 – use **(L)** parts.
Power Frame #3 – use **(L)** parts.

© 2014 Pentair Ltd.

AURORA® 340A SERIES

MODEL 341A
PIECE NUMBERS

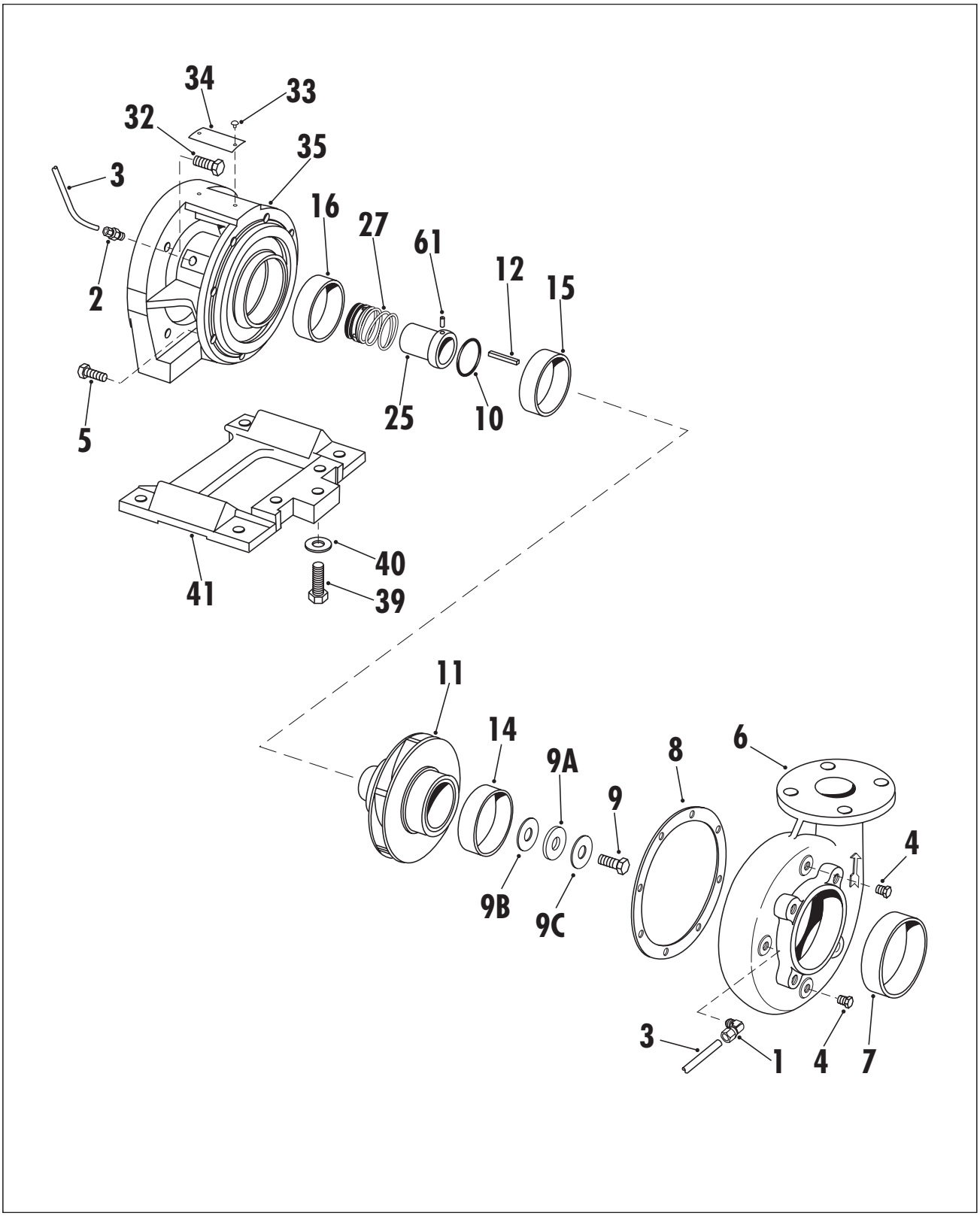

© 2014 Pentair Ltd.

MODEL 342A
PIECE NUMBERS

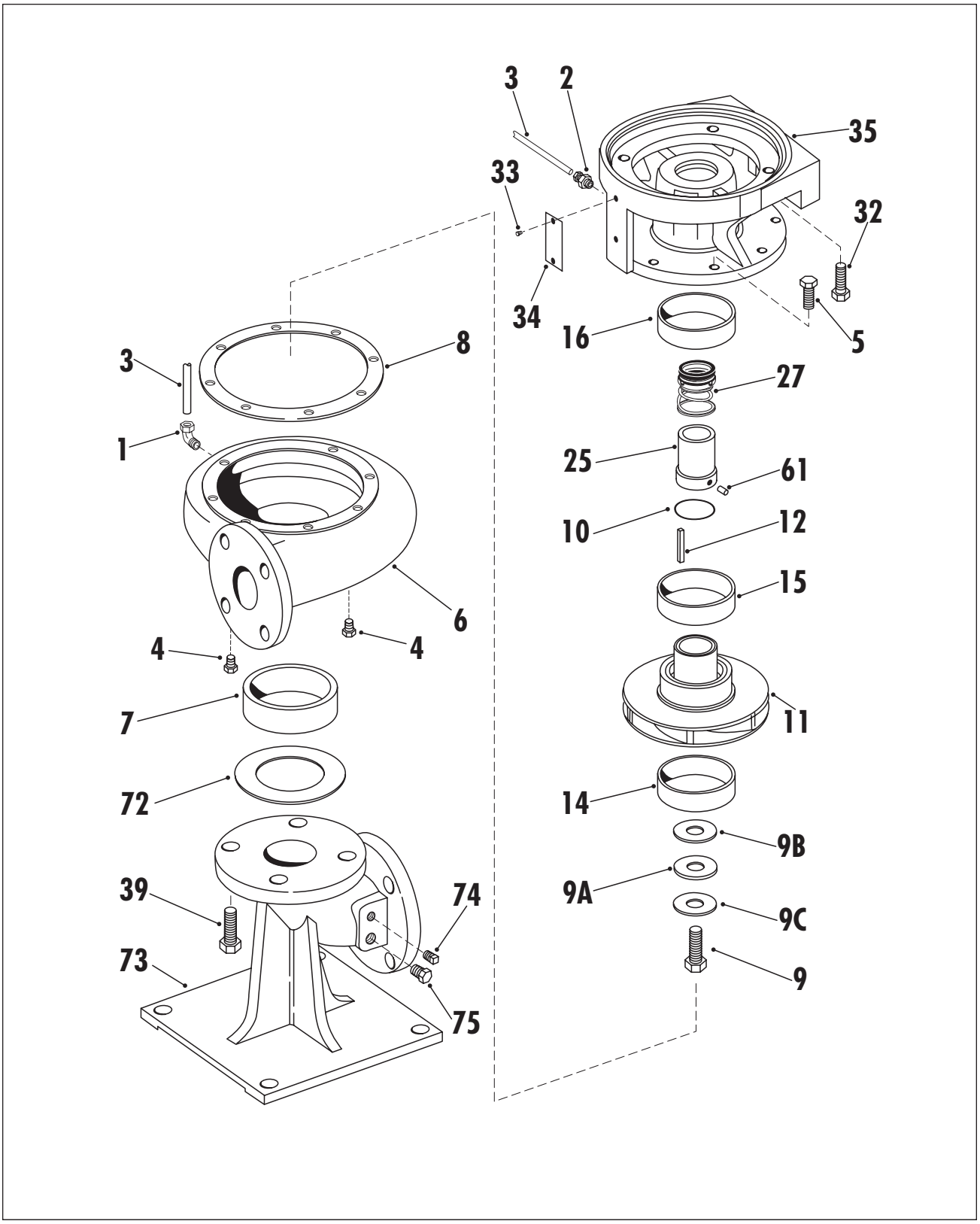

© 2014 Pentair Ltd.

MODEL 344A
PIECE NUMBERS

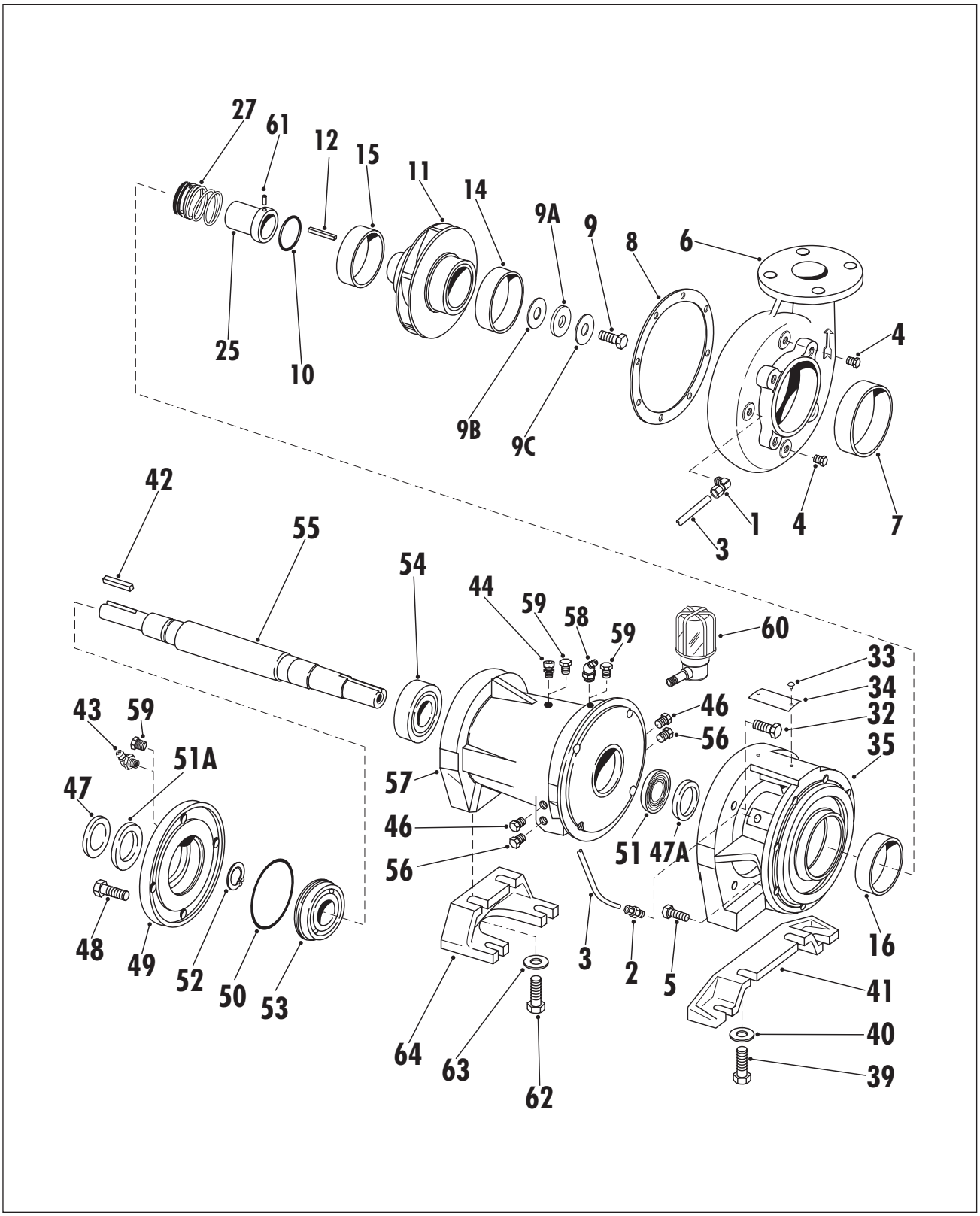

© 2014 Pentair Ltd.

AURORA® 340A SERIES
MODELS 341A - 342A- 344A
1-1/4 x 1-1/2 x 7 – 4 x 4 x 7B

PARTS LIST

PC. NO.	DESCRIPTION	QTY	PART NO.	MATERIAL B.F.		MATERIAL A.I.	
1	COMPRESSION ELBOW	1	868-3660	190		087	
2	COMPRESSION CONNECTOR	1	868-3359	190		087	
3	TUBING	1	872-0124	175		087	
4	PIPE PLUG	3	600-0002	087		087	
5	CAPSCREW	8	168-0381	082		082	
6	CASING						
	1-1/4 x 1-1/2 x 7	1	180-2138	010		010	
	1-1/2 x 2 x 7	1	180-2140	010		010	
	2 x 2-1/2 x 7A & B	1	180-2142	010		010	
	2-1/2 x 3 x 7A & B	1	180-2144	010		010	
	4 x 4 x 7A & B	1	180-2146	010		010	
	VERTICAL						
	1-1/4 x 1-1/2 x 7	1	180-2196	010		010	
	1-1/2 x 2 x 7	1	180-2197	010		010	
7	CASE RING						
	1-1/4 x 1-1/2 x 7	1	676-1150	208		010	
	1-1/2 x 2 x 7	1	676-1151	208		010	
	2 x 2-1/2 x 7A & B	1	676-1152	208		010	
	2-1/2 x 3 x 7A & B	1	676-1152	208		010	
	4 x 4 x 7A & B	1	676-1154	208		010	
8	GASKET	1	364-1014	603		603	
9	CAPSCREW **(S)**	1	168-0382	113		113	
	(L)	1	168-0490	113		113	
9A	WASHER **(S)**	1	908-0603	087		087	
	(L)	1	908-0604	087		087	
9B	GASKET **(S)**	1	364-2034	603		603	
	(L)	1	364-2035	603		603	
9C	CAPSCREW **(S)**	1	908-1290	999		999	
	SEAL **(L)**	1	908-1292	999		999	
10	O-RING **(S)**	1	364-0409	457		457	
	(L)	1	364-0414	457		457	
11	IMPELLER **(S)**						
	1-1/4 x 1-1/2 x 7	1	443-0407	225		010	
	1-1/2 x 2 x 7	1	443-0409	225		010	
	2 x 2-1/2 x 7A	1	443-0411	225		010	
	2 x 2-1/2 x 7B	1	443-0415	225		010	
	2-1/2 x 3 x 7A	1	443-2034	225		010	
	2-1/2 x 3 x 7B	1	443-0417	225		010	
	4 x 4 x 7A	1	443-0425	225		010	
	4 x 4 x 7B	1	443-0423	225		010	
	IMPELLER **(L)**						
	2 x 2-1/2 x 7A	1	443-0413	225		010	
	2-1/2 x 3 x 7A	1	443-2035	225		010	
	2-1/2 x 3 x 7B	1	443-0419	225		010	
	4 x 4 x 7A	1	443-0427	225		010	
	4 x 4 x 7B	1	443-0472	225		010	
11A	IMPELLER **(S)***						
	1-1/4 x 1-1/2 x 7	1	443-0408	225		010	
	1-1/2 x 2 x 7	1	443-0410	225		010	
	2 x 2-1/2 x 7A	1	443-0412	225		010	
	2 x 2-1/2 x 7B	1	443-0416	225		010	
	2-1/2 x 3 x 7A	1	443-1775	225		010	

PC. NO.	DESCRIPTION	QTY	PART NO.	MATERIAL B.F.		MATERIAL A.I.	
11A	IMPELLER **(S)***						
	2-1/2 x 3 x 7B	1	443-0418	225		010	
	4 x 4 x 7A	1	443-0426	225		010	
	4 x 4 x 7B	1	443-0424	225		010	
11A	IMPELLER **(L)***						
	2 x 2-1/2 x 7A	1	443-0414	225		010	
	2-1/2 x 3 x 7A	1	443-1776	225		010	
	2-1/2 x 3 x 7B	1	443-0420	225		010	
	4 x 4 x 7A	1	443-0428	225		010	
	4 x 4 x 7B	1	443-0471	225		010	
12	IMPELLER KEY **(S)**	1	472-0201	087		087	
	(L)	1	472-0247	087		087	
14	IMPELLER RING (OPTIONAL)						
	1-1/4 x 1-1/2 x 7	1	676-1145	208		010	
	1-1/2 x 2 x 7	1	676-1146	208		010	
	2 x 2-1/2 x 7A	1	676-1133	208		010	
	2 x 2-1/2 x 7B	1	676-1133	208		010	
	2-1/2 x 3 x 7A	1	676-1133	208		010	
	2-1/2 x 3 x 7B	1	676-1133	208		010	
	4 x 4 x 7A	1	676-1140	208		010	
	4 x 4 x 7B	1	676-1140	208		010	
15	IMPELLER RING (OPTIONAL)						
	2 x 2-1/2 x 7A	1	676-1133	208		010	
	2 x 2-1/2 x 7B	1	676-1133	208		010	
	2-1/2 x 3 x 7A	1	676-1133	208		010	
	2-1/2 x 3 x 7B	1	676-1133	208		010	
	4 x 4 x 7A	1	676-1133	208		010	
	4 x 4 x 7B	1	676-1133	208		010	
16	RING (NOT REQUIRED)						
25	SLEEVE **(S)**	1	756-0077	208		104	
	(L)	1	756-0078	208		104	
27	SEAL **(S)**	1	712-0907	753		753	
	(L)	1	712-0910	753		753	
32	CAPSCREW MTR. FR.						
	143JM – 184JM	4	168-0386	082		082	
	213JM – 256JM	4	168-0490	082		082	
33	U DRIVE SCREW	2	708-0013	365		365	
34	NAMEPLATE	1	532-0045	114		114	
35	BRACKET (341A)						
	143JM – 184JM	1	116-0192	010		010	
	213JM – 215JM	1	116-0194	010		010	
	254JM – 256JM	1	116-0197	010		010	
	284JM – 326JM	1	116-0476	010		010	
	BRACKET (342A)						
	143JM – 184JM	1	116-0192	010		010	
	213JM – 215JM	1	116-0194	010		010	
	254JM – 256JM	1	116-0197	010		010	

*MACHINED FOR OPTIONAL RING NUMBERS 14 & 15

© 2014 Pentair Ltd.

AURORA® 340A SERIES
MODELS 341A - 342A- 344A
1-1/4 x 1-1/2 x 7 – 4 x 4 x 7B

PARTS LIST

PC. NO.	DESCRIPTION	QTY	PART NO.	MATERIAL B.F.		MATERIAL A.I.	
35	BRACKET (342A)						
	284JM - 326JM	1	116-0476	010		010	
	BRACKET (344A)						
	POWER FRAME #1	1	116-0192	010		010	
	POWER FRAME #2	1	116-0197	010		010	
39	CAPSCREW (341A)						
	143JM – 184JM	3	168-0488	082		082	
	213JM – 256JM	NOT REQUIRED					
	CAPSCREW (342A)						
	1-1/4 x 1-1/2 x 7	4	168-0490	082		082	
	1-1/2 x 2 x 7	4	168-0560	082		082	
	2 x 2-1/2 x 7A & B	4	168-0562	082		082	
	2-1/2 x 3 X 7A & B	4	168-0562	082		082	
	4 x 4 x 7A & B	4	168-0564	082		082	
	CAPSCREW (344A)						
	POWER FRAME #1	3	168-0488	082		082	
	POWER FRAME #2	2	168-0490	082		082	
40	WASHER (341A)						
	143JM – 184JM	3	908-0114	080		080	
	213JM – 256JM	NOT REQUIRED					
	WASHER (342A)	NOT REQUIRED					
	WASHER (344A)						
	POWER FRAME #1	3	908-0114	080		080	
	POWER FRAME #2	2	908-0114	080		080	
41	SUPPORT (341A)						
	143JM – 184JM	1	820-0184	010		010	
	213JM – 256JM	NOT REQUIRED					
	SUPPORT (344A)						
	POWER FRAME #1	1	820-1441	087		087	
	POWER FRAME #2	1	820-0186	010		010	
42	DRIVE KEY (344A)						
	POWER FRAME #1	1	472-0206	087		087	
	POWER FRAME #2	1	472-0247	087		087	
43	GREASE FITTING						
	POWER FRAME #1 & #2	1	508-0005	651		651	
44	VENT TUBE						
	POWER FRAME #1 & #2	1	864-0051	656		656	
46	PROTECTOR						
	POWER FRAME #1 & #2	1	624-0010	503		503	
47	SLINGER						
	POWER FRAME #1	1	764-1015	478		478	
	POWER FRAME #2	1	764-1021	478		478	
47A	SLINGER						
	POWER FRAME #1	1	764-1015	478		478	
	POWER FRAME #2	1	764-1021	478		478	
48	CAPSCREW						
	POWER FRAME #1	4	168-0388	082		082	
	POWER FRAME #2	4	168-0492	082		082	
49	BEARING CAP						
	POWER FRAME #1	1	164-0470	010		010	
	POWER FRAME #2	1	164-0471	010		010	

PC. NO.	DESCRIPTION	QTY	PART NO.	MATERIAL B.F.		MATERIAL A.I.	
50	O-RING						
	POWER FRAME #1	1	364-0423	457		457	
	POWER FRAME #2	1	364-0432	457		457	
51	SEAL, GREASE LUBE						
	POWER FRAME #1	1	712-0231	653		653	
	POWER FRAME #2	1	712-0233	653		653	
	SEAL, OIL LUBE						
	POWER FRAME #1	1	712-0016	653		653	
	POWER FRAME #2	1	712-0054	653		653	
51A	SEAL, GREASE LUBE						
	POWER FRAME #1	1	712-0231	653		653	
	POWER FRAME #2	1	712-0233	653		653	
	SEAL, OIL LUBE						
	POWER FRAME #1	1	712-0016	653		653	
	POWER FRAME #2	1	712-0054	653		653	
52	RET. RING						
	POWER FRAME #1	1	676-0929	088		088	
	POWER FRAME #1	1	676-0938	088		088	
53	O.B. BEARING						
	POWER FRAME #1						
	STANDARD OPEN	1	068-2206	647		647	
	SEALED PERM LUBE	1	068-2219	647		647	
	POWER FRAME #2						
	STANDARD OPEN	1	068-2308	647		647	
	SEALED PERM LUBE	1	068-2220	647		647	
54	I.B. BEARING						
	POWER FRAME #1						
	STANDARD OPEN	1	068-1907	647		647	
	SEALED PERM LUBE	1	068-0114	647		647	
	POWER FRAME #2						
	STANDARD OPEN	1	068-0159	647		647	
	SEALED PERM LUBE	1	068-2018	647		647	
55	SHAFT						
	POWER FRAME #1	1	728-0121	063		063	
	POWER FRAME #2	1	728-0122	063		063	
56	PROTECTOR						
	POWER FRAME #1 & #2	2	624-0010	503		503	
57	FRAME						
	GREASE						
	POWER FRAME #1	1	356-0201	010		010	
	OIL LUBE						
	POWER FRAME #1	1	356-0231	010		010	
	OIL LUBE						
	POWER FRAME #2	1	356-0232	010		010	
	GREASE						
	POWER FRAME #2	1	356-0202	010		010	
58	GREASE FITTING						
	POWER FRAME #1 & #2	1	508-0001	651		651	

© 2014 Pentair Ltd.

AURORA® 340A SERIES
MODELS 341A - 342A- 344A
1-1/4 x 1-1/2 x 7 – 4 x 4 x 7B

PARTS LIST

PC. NO.	DESCRIPTION	QTY	PART NO.	MATERIAL B.F.		MATERIAL A.I.	
59	PIPE PLUG						
	POWER FRAME #1 & #2	2	600-0001	087		087	
60	OILER						
	POWER FRAME #1 & #2	1	552-0029	652		652	
61	PIN	INCLUDED WITH NO. 25					
62	CAPSCREW						
	POWER FRAME #1	1	168-0490	080		080	
	POWER FRAME #2	2	168-0490	080		080	
63	WASHER						
	POWER FRAME #1	1	908-0114	080		080	
	POWER FRAME #2	1	908-0114	080		080	
64	SUPPORT						
	POWER FRAME #1	1	820-0187	010		010	
	POWER FRAME #2	1	820-0188	010		010	
72	GASKET						
	1-1/4 x 1-1/2 x 7	1	364-0602	603		603	
	1-1/2 x 2 x 7	1	364-0603	603		603	
	2 x 2-1/2 x 7A & 7B	1	364-0604	603		603	
	2-1/2 x 3 x 7A & 7B	1	364-0605	603		603	
	4 x 4 x 7A & 7B	1	364-0607	603		603	
73	BASE						
	1-1/4 x 1-1/2 x 7	1	816-1102	010		010	
	1-1/2 x 2 x 7	1	816-1103	010		010	
	2 x 2-1/2 x 7A & B	1	816-1104	010		010	
	2-1/2 x 3 x 7A & B	1	816-1105	010		010	
	4 x 4 x 7A & B	1	816-1106	010		010	
74	PIPE PLUG	1	600-0002	087		087	
75	PIPE PLUG						
	1-1/4 x 1-1/2 x 7	1	600-0002	087		087	
	1-1/2 x 2 x 7	1	600-0003	087		087	
	2 x 2-1/2 x 7A & 7B	1	600-0003	087		087	
	2-1/2 x 3 x 7A & 7B	1	600-0004	028		028	
	4 x 4 x 7A & 7B	1	600-0004	028		028	
	(NOT SHOWN)						
	SEAL KIT **(S)**	1	476-0250	644			
	(INCLUDES PIECE NO'S 8, 9, 9A, 9B, 9C, 10, 12, 25, 27)						
	SEAL KIT **(L)**	1	476-0253	644			

© 2014 Pentair Ltd.

AURORA® 340A SERIES
MODELS 341A - 342A - 344A
1-1/4 x 1-1/2 x 9B – 6 x 6 x 9

PARTS LIST

PC. NO.	DESCRIPTION	QTY	PART NO.	MATERIAL B.F.		MATERIAL A.I.	
1	COMPRESSION ELBOW	1	868-3660	190		087	
2	COMPRESSION CONNECTOR	1	868-3359	190		087	
3	TUBING	1	872-0124	175		087	
4	PIPE PLUG	3	600-0002	087		087	
5	CAPSCREW	8	168-0487	082		082	
6	CASING						
	1-1/4 x 1-1/2 x 9B	1	180-2148	010		010	
	1-1/2 x 2 x 9A	1	180-2149	010		010	
	1-1/2 x 2 x 9B	1	180-2149	010		010	
	1-1/2 x 2 x 9C	1	180-2151	010		010	
	2 x 2-1/2 x 9	1	180-2152	010		010	
	2-1/2 x 3 x 9	1	180-2153	010		010	
	3 x 4 x 9A	1	180-2351	010		010	
	3 x 4 x 9B	1	180-2351	010		010	
	4 x 5 x 9A	1	180-2156	010		010	
	4 x 5 x 9B	1	180-2157	010		010	
	6 x 6 x 9	1	180-2159	010		010	
	VERTICAL						
	1-1/4 x 1-1/2 x 9B	1	180-2198	010		010	
	1-1/2 x 2 x 9A	1	180-2199	010		010	
	1-1/2 x 2 x 9B	1	180-2199	010		010	
	1-1/2 x 2 x 9C	1	180-2200	010		010	
7	CASE RING						
	1-1/4 x 1-1/2 x 9B	1	676-1150	208		010	
	1-1/2 x 2 x 9A	1	676-1151	208		010	
	1-1/2 x 2 x 9B	1	676-1151	208		010	
	1-1/2 x 2 x 9C	1	676-1151	208		010	
	2 x 2-1/2 x 9	1	676-1152	208		010	
	2-1/2 x 3 x 9	1	676-1152	208		010	
	3 x 4 x 9A	1	676-1154	208		010	
	3 x 4 x 9B	1	676-1154	208		010	
	4 x 5 x 9A	1	676-1154	208		010	
	4 x 5 x 9B	1	676-1155	208		010	
	6 x 6 x 9	1	676-1155	208		010	
8	GASKET	1	364-1015	603		603	
9	CAPSCREW **(S)**	1	168-0382	113		113	
	(L)	1	168-0490	113		113	
9A	WASHER **(S)**	1	908-0603	087		087	
	(L)	1	908-0604	087		087	
9B	GASKET **(S)**	1	364-2034	603		603	
	(L)	1	364-2035	603		603	
9C	CAPSCREW **(S)**	1	908-1290	999		999	
	SEAL **(L)**	1	908-1292	999		999	
10	O-RING **(S)**	**1**	364-0409	457		457	
	(L)	1	364-0414	457		457	
11	IMPELLER **(S)**						
	1-1/4 x 1-1/2 x 9B	1	443-0431	225		010	
	1-1/2 x 2 x 9A	1	443-0437	225		010	
	1-1/2 x 2 x 9B	1	443-0435	225		010	
	1-1/2 x 2 x 9C	1	443-0437	225		010	
	2 x 2-1/2 x 9	1	443-0441	225		010	
	2-1/2 x 3 x 9	1	443-0445	225		010	
11	IMPELLER **(S)**						
	3 x 4 x 9A	1	443-1766	225		010	
	3 x 4 x 9B	1	443-1762	225		010	
	4 x 5 x 9A	1	443-1777	225		010	
	4 x 5 x 9B	1	443-0457	225		010	
	6 x 6 x 9	1	443-0465	225		010	
11	IMPELLER **(L)**						
	1-1/2 x 2 x 9C	1	443-0439	225		010	
	2 x 2-1/2 x 9	1	443-0443	225		010	
	2-1/2 x 3 x 9	1	443-0447	225		010	
	3 x 4 x 9A	1	443-1768	225		010	
	3 x 4 x 9B	1	443-1764	225		010	
	4 x 5 x 9A	1	443-1752	225		010	
	4 x 5 x 9B	1	443-0459	225		010	
	6 x 6 x 9	1	443-0467	225		010	
11A	IMPELLER **(S)***						
	1-1/4 x 1-1/2 x 9B	1	443-0432	225		010	
	1-1/2 x 2 x 9A	1	443-0438	225		010	
	1-1/2 x 2 x 9B	1	443-0436	225		010	
	1-1/2 x 2 x 9C	1	443-0438	225		010	
	2 x 2-1/2 x 9	1	443-0442	225		010	
	2-1/2 x 3 x 9	1	443-0446	225		010	
	3 x 4 x 9A	1	443-1767	225		010	
	3 x 4 x 9B	1	443-1763	225		010	
	4 x 5 x 9A	1	443-1778	225		010	
	4 x 5 x 9B	1	443-0458	225		010	
	6 x 6 x 9	1	443-0466	225		010	
11A	IMPELLER **(L)***						
	1-1/2 x 2 x 9C	1	443-0440	225		010	
	2 x 2-1/2 x 9	1	443-0444	225		010	
	2-1/2 x 3 x 9	1	443-0448	225		010	
	3 x 4 x 9A	1	443-1769	225		010	
	3 x 4 x 9B	1	443-1765	225		010	
	4 x 5 x 9A	1	443-1753	225		010	
	4 x 5 x 9B	1	443-0460	225		010	
	6 x 6 x 9	1	443-0468	225		010	
12	IMPELLER KEY **(S)**	1	472-0201	087		087	
	(L)	1	472-0247	087		087	
14	IMPELLER RING (OPTIONAL)						
	1-1/4 x 1-1/2 x 9B	1	676-1145	208		010	
	1-1/2 x 2 x 9	1	676-1146	208		010	
	2 x 2-1/2 x 9	1	676-1133	208		010	
	2-1/2 x 3 x 9	1	676-1133	208		010	
	3 x 4 x 9A & B	1	676-1140	208		010	
	4 x 5 x 9A	1	676-1140	208		010	
	4 x 5 x 9B	1	676-1141	208		010	
	6 x 6 x 9	1	676-1141	208		010	

*MACHINED FOR OPTIONAL RING NUMBERS 14 & 15

© 2014 Pentair Ltd.

AURORA® 340A SERIES
MODELS 341A - 342A - 344A
1-1/4 x 1-1/2 x 9B – 6 x 6 x 9

PARTS LIST

PC. NO.	DESCRIPTION	QTY	PART NO.	MATERIAL B.F.		MATERIAL A.I.	
15	IMPELLER RING (OPTIONAL)						
	2 x 2-1/2 x 9	1	676-1133	208		010	
	2-1/2 x 3 x 9	1	676-1133	208		010	
	3 x 4 x 9A	1	676-1156	208		010	
	3 x 4 x 9B	1	676-1156	208		010	
	4 x 5 x 9A	1	676-1156	208		010	
	4 x 5 x 9B	1	676-1156	208		010	
	6 x 6 x 9	1	676-1156	208		010	
16	RING						
	2 x 2-1/2 x 9	1	676-0003	010		010	
	2-1/2 x 3 x 9	1	676-0003	010		010	
25	SLEEVE **(S)**	1	756-0077	208		104	
	(L)	1	756-0078	208		104	
27	SEAL **(S)**	1	712-0907	753		753	
	(L)	1	712-0910	753		753	
32	CAPSCREW MTR. FR.						
	143JM – 184JM	4	168-0386	082		082	
	213JM – 256JM	4	168-0490	082		082	
33	U DRIVE SCREW	2	708-0013	365		365	
34	NAMEPLATE	1	532-0045	114		114	
35	BRACKET (341A)						
	143JM – 184JM	1	116-0193	010		010	
	213JM – 215JM	1	116-0195	010		010	
	254JM – 256JM	1	116-0198	010		010	
	284JM – 326JM	1	116-0477	010		010	
	BRACKET (342A)						
	143JM – 184JM	1	116-0193	010		010	
	213JM – 215JM	1	116-0195	010		010	
	254JM – 256JM	1	116-0198	010		010	
	284JM – 326JM	1	116-0477	010		010	
	BRACKET (344A)						
	POWER FRAME #1	1	116-0193	010		010	
	POWER FRAME #2 & #3	1	116-0198	010		010	
39	CAPSCREW (341A)						
	143JM – 184JM	3	168-0488	082		082	
	213JM – 256JM	NOT REQUIRED					
	CAPSCREW (342A)						
	1-1/4 x 1-1/2 x 9B	4	168-0490	082		082	
	1-1/2 x 2 x 9	4	168-0560	082		082	
	2 x 2-1/2 x 9	4	168-0562	082		082	
	2-1/2 x 3 x 9	4	168-0562	082		082	
	3 x 4 x 9	4	168-0564	082		082	
	4 x 5 x 9A & B	4	168-0564	082		082	
	6 x 6 x 9	4	168-0634	082		082	
	CAPSCREW (344A)						
	POWER FRAME #1	3	168-0488	082		082	
	POWER FRAME #2 & #3	2	168-0490	082		082	

PC. NO.	DESCRIPTION	QTY	PART NO.	MATERIAL B.F.		MATERIAL A.I.	
40	WASHER (341A)						
	143JM – 184JM	3	908-0114	080		080	
	213JM – 256JM	NOT REQUIRED					
	WASHER (342A)	NOT REQUIRED					
	WASHER (344A)						
	POWER FRAME #1	3	908-0114	080		080	
	POWER FRAME #2 & #3	2	908-0114	080		080	
41	SUPPORT (341A)						
	143JM – 184JM	1	820-0184	010		010	
	213JM – 256JM	NOT REQUIRED					
	SUPPORT (344A)						
	POWER FRAME #1	1	820-1441	087		087	
	POWER FRAME #2 & #3	1	820-0186	010		010	
42	DRIVE KEY (344A)						
	POWER FRAME #1	1	472-0206	087		087	
	POWER FRAME #2	1	472-0247	087		087	
43	GREASE FITTING						
	POWER FRAME #1, #2 & #3	1	508-0005	651		651	
44	VENT TUBE	1	864-0051	656		656	
46	PROTECTOR	2	624-0010	503		503	
47	SLINGER						
	POWER FRAME #1	1	764-1015	478		478	
	POWER FRAME #2 & #3	1	764-1021	478		478	
47A	SLINGER						
	POWER FRAME #1	1	764-1015	478		478	
	POWER FRAME #2	1	764-1021	478		478	
	POWER FRAME #3	1	764-1026	478		478	
48	CAPSCREW						
	POWER FRAME #1	4	168-0388	082		082	
	POWER FRAME #2 & #3	4	168-0492	082		082	
49	BEARING CAP						
	POWER FRAME #1	1	164-0470	010		010	
	POWER FRAME #2	1	164-0471	010		010	
	POWER FRAME #3	1	164-0472	010		010	
50	O-RING						
	POWER FRAME #1	1	364-0423	457		457	
	POWER FRAME #2	1	364-0432	457		457	
	POWER FRAME #3	1	364-0438	457		457	
51	SEAL						
	POWER FRAME #1	1	712-0231	653		653	
	POWER FRAME #2 & #3	1	712-0233	653		653	
	OIL LUBE						
	POWER FRAME #1	1	712-0016	653		653	
	POWER FRAME #2 & #3	1	712-0054	653		653	

© 2014 Pentair Ltd.

AURORA® 340A SERIES
MODELS 341A - 342A - 344A
1-1/4 x 1-1/2 x 9B – 6 x 6 x 9

PARTS LIST

PC. NO.	DESCRIPTION	QTY	PART NO.	MATERIAL B.F.		MATERIAL A.I.	
51A	SEAL						
	POWER FRAME #1	1	712-0231	653		653	
	POWER FRAME #2	1	712-0233	653		653	
	POWER FRAME #3	1	712-0234	653		653	
	OIL LUBE						
	POWER FRAME #1	1	712-0016	653		653	
	POWER FRAME #2	1	712-0054	653		653	
	POWER FRAME #3	1	712-0056	653		653	
52	RET. RING						
	POWER FRAME #1	1	676-0929	088		088	
	POWER FRAME #2	1	676-0938	088		088	
	POWER FRAME #3	1	676-0944	088		088	
53	O.B. BEARING						
	POWER FRAME #1						
	STANDARD OPEN	1	068-2206	647		647	
	SEALED PERM LUBE	1	068-2219	647		647	
	POWER FRAME #2						
	STANDARD OPEN	1	068-2308	647		647	
	SEALED PERM LUBE	1	068-2220	647		647	
	POWER FRAME #3						
	STANDARD OPEN	1	068-2310	647		647	
	SEALED PERM LUBE	1	068-2221	647		647	
54	I.B. BEARING						
	POWER FRAME #1						
	STANDARD OPEN	1	068-1907	647		647	
	SEALED PERM LUBE	1	068-0114	647		647	
	POWER FRAME #2						
	STANDARD OPEN	1	068-0159	647		647	
	SEALED PERM LUBE	1	068-2018	647		647	
	POWER FRAME #3						
	STANDARD OPEN	1	068-0161	647		647	
	SEALED PERM LUBE	1	068-2022	647		647	
55	SHAFT						
	POWER FRAME #1	1	728-0121	063		063	
	POWER FRAME #2	1	728-0122	063		063	
	POWER FRAME #3	1	728-0123	063		063	
56	PROTECTOR						
	POWER FRAME #1, #2 & #3	2	624-0010	503		503	
57	FRAME						
	OIL LUBE						
	POWER FRAME #1	1	356-0231	010		010	
	POWER FRAME #2	1	356-0232	010		010	
	POWER FRAME #3	1	356-0233	010		010	
	GREASE						
	POWER FRAME #1	1	356-0201	010		010	
	POWER FRAME #2	1	356-0202	010		010	
	POWER FRAME #3	1	356-0203	010		010	

PC. NO.	DESCRIPTION	QTY	PART NO.	MATERIAL B.F.		MATERIAL A.I.	
58	GREASE FITTING						
	POWER FRAME #1, #2 & #3	1	508-0001	651		651	
59	PIPE PLUG						
	POWER FRAME #1, #2 & #3	2	600-0001	087		087	
60	OILER						
	POWER FRAME #1, #2 & #3	1	552-0029	652		652	
61	PIN	INCLUDED WITH NO. 25					
62	CAPSCREW						
	POWER FRAME #1	1	168-0490	082		082	
	POWER FRAME #2 & #3	2	168-0490	082		082	
63	WASHER						
	POWER FRAME #1	1	908-0114	080		080	
	POWER FRAME #2 & #3	1	908-0114	080		080	
64	SUPPORT						
	POWER FRAME #1	1	820-0121	010		010	
	POWER FRAME #2 & #3	1	820-0189	010		010	
72	GASKET						
	1-1/4 x 1-1/2 x 9B	1	364-0602	603		603	
	1-1/2 x 2 x 9A, B & C	1	364-0603	603		603	
	2 x 2-1/2 x 9	1	364-0604	603		603	
	2-1/2 x 3 x 9	1	364-0605	603		603	
	3 x 4 x 9A & B	1	364-0607	603		603	
	4 x 5 x 9A & B	1	364-0608	603		603	
	6 x 6 x 9	1	364-0609	603		603	
73	BASE						
	1-1/4 x 1-1/2 x 9B	1	816-1102	010		010	
	1-1/2 x 2 x 9A, B & C	1	816-1103	010		010	
	2 x 2-1/2 x 9	1	816-1104	010		010	
	2-1/2 x 3 x 9	1	816-1105	010		010	
	3 x 4 x 9A & B	1	816-1106	010		010	
	4 x 5 x 9A & B	1	816-1107	010		010	
	6 x 6 x 9	1	816-1108	010		010	
74	PIPE PLUG	1	600-0002	087		087	
75	PIPE PLUG						
	1-1/4 x 1-1/2 x 9B	1	600-0002	087		087	
	1-1/2 x 2 x 9A, B & C	1	600-0003	087		087	
	2 x 2-1/2 x 9	1	600-0003	087		087	
	2-1/2 x 3 x 9	1	600-0004	028		028	
	3 x 4 x 9A & B	1	600-0004	028		028	
	4 x 5 x 9A & B	1	600-0022	028		028	
	6 x 6 x 9	1	600-0022	028		028	
	(NOT SHOWN)						
	SEAL KIT **(S)**	1	476-0250	644			
	(INCLUDES PIECE NO'S 8, 9, 9A, 9B, 9C, 10, 12, 25, 27)						
	SEAL KIT **(L)**	1	476-0253	644			

© 2014 Pentair Ltd.

AURORA® 340A SERIES
MODELS 341A - 342A - 344A
1-1/2 x 2 x 11 – 6 x 6 x 11A

PARTS LIST

PC. NO.	DESCRIPTION	QTY	PART NO.	MATERIAL B.F.		MATERIAL A.I.	
1	COMPRESSION ELBOW	1	868-3660	190		087	
2	COMPRESSION CONNECTOR	1	868-3359	190		087	
3	TUBING	1	872-0124	175		087	
4	PIPE PLUG	3	600-0002	087		087	
5	CAPSCREW	8	168-0490	082		082	
6	CASING						
	1-1/2 x 2 x 11	1	180-2353	010		010	
	2 x 3 x 11	1	180-2354	010		010	
	3 x 4 x 11	1	180-2371	010		010	
	4 x 5 x 11	1	180-2356	010		010	
	5 x 6 x 11	1	180-2357	010		010	
	6 x 6 x 11	1	180-2172	010		010	
	6 x 6 x 11A	1	180-2363	010		010	
	VERTICAL						
	1-1/2 x 2 x 11	1	180-2457	010		010	
7	CASE RING						
	1-1/2 x 2 x 11	1	676-1151	208		010	
	2 x 3 x 11	1	676-1152	208		010	
	3 x 4 x 11	1	676-1154	208		010	
	4 x 5 x 11	1	676-1155	208		010	
	5 x 6 x 11	1	676-1684	208		010	
	6 x 6 x 11	1	676-1684	208		010	
	6 x 6 x 11A	1	676-1684	208		010	
8	GASKET	1	364-2109	603		603	
	6 x 6 x 11 & 11A ONLY	1	364-1016	603		603	
9	CAPSCREW **(S)**	1	168-0382	113		113	
	(L)	1	168-0490	113		113	
9A	WASHER **(S)**	1	908-0603	087		087	
	(L)	1	908-0604	087		087	
9B	GASKET **(S)**	1	364-2034	603		603	
	(L)	1	364-2035	603		603	
9C	CAPSCREW **(S)**	1	908-1290	999		999	
	SEAL **(L)**	1	908-1292	999		999	
10	O-RING **(S)**	1	364-0409	457		457	
	(L)	1	364-0414	457		457	
11	IMPELLER **(S)**						
	1-1/2 x 2 x 11	1	443-2511	225		010	
	2 x 3 x 11	1	443-2387	225		010	
	3 x 4 x 11	1	443-2388	225		010	
	4 x 5 x 11	1	443-2389	225		010	
	5 x 6 x 11	1	443-2390	225		010	
	6 x 6 x 11	1	443-2390	225		010	
	6 x 6 x 11A	1	443-2390	225		010	

PC. NO.	DESCRIPTION	QTY	PART NO.	MATERIAL B.F.		MATERIAL A.I.	
11	IMPELLER **(L)**						
	1-1/2 x 2 x 11	1	443-2513	225		010	
	2 x 3 x 11	1	443-2399	225		010	
	3 x 4 x 11	1	443-2400	225		010	
	4 x 5 x 11	1	443-2401	225		010	
	5 x 6 x 11	1	443-2402	225		010	
	6 x 6 x 11	1	443-2402	225		010	
	6 x 6 x 11A	1	443-2402	225		010	
11A	IMPELLER **(S)***						
	1-1/2 x 2 x 11	1	443-2512	225		010	
	2 x 3 x11	1	443-2423	225		010	
	3 x 4 x 11	1	443-2424	225		010	
	4 x 5 x 11	1	443-2425	225		010	
	5 x 11	1	443-2426	225		010	
	6 x 11	1	443-2426	225		010	
	6 x 11A	1	443-2426	225		010	
11A	IMPELLER **(L)***						
	1-1/2 x 2 x 11	1	443-2514	225		010	
	2 x 3 x11	1	443-2427	225		010	
	3 x 4 x 11	1	443-2428	225		010	
	4 x 5 x 11	1	443-2429	225		010	
	5 x 11	1	443-2430	225		010	
	6 x 11	1	443-2430	225		010	
	6 x 11A	1	443-2430	225		010	
12	IMPELLER KEY **(S)**	1	472-0201	087		087	
	IMPELLER KEY **(L)**	1	472-0247	087		087	
14	IMPELLER RING (OPTIONAL)						
	1-1/2 x 2 x 11	1	676-1146	208		010	
	2 x 3 x 11	1	676-1133	208		010	
	3 x 4 x 11	1	676-1140	208		010	
	4 x 5 x 11	1	676-1141	208		010	
	5 x 6 x 11	1	676-1143	208		010	
	6 x 6 x 11	1	676-1143	208		010	
	6 x 6 x 11A	1	676-1143	208		010	
15	IMPELLER RING (OPTIONAL)						
	2 x 3 x 11	1	676-1133	208		010	
	3 x 4 x 11	1	676-1156	208		010	
	4 x 5 x 11	1	676-1156	208		010	
	5 x 6 x 11	1	676-1156	208		010	
	6 x 6 x 11	1	676-1156	208		010	
	6 x 6 x 11A	1	676-1156	208		010	
16	RING 2 x 3 x 11	1	676-0003	010		010	

*MACHINED FOR OPTIONAL RING NUMBERS 14 & 15

© 2014 Pentair Ltd.

AURORA® 340A SERIES
MODELS 341A - 342A - 344A
1-1/2 x 2 x 11 – 6 x 6 x 11A

PARTS LIST

PC. NO.	DESCRIPTION	QTY	PART NO.	MATERIAL B.F.		MATERIAL A.I.	
25	SLEEVE (S)	1	756-0077	208		104	
	(L)	1	756-0078	208		104	
27	SEAL (S)	1	712-0907	753		753	
	(L)	1	712-0910	753		753	
32	CAPSCREW MTR. FR.						
	213JM – 215JM	4	168-0490	082		082	
	254JM – 256JM	4	168-0490	082		082	
	284JM – 326JM	4	168-0562	082		082	
33	U DRIVE SCREW	2	708-0013	365		365	
34	NAMEPLATE	1	532-0045	114		114	
35	BRACKET (341A) EXCEPT 6 x 6 x11 AND 6 x 6 x 11A						
	213JM – 215JM	1	116-0465	010		010	
	254JM – 256JM	1	116-0466	010		010	
	284JM – 326JM	1	116-0467	010		010	
	BRACKET (342A) EXCEPT 6 x 6 x 11 AND 6 x 6 x 11A						
	213JM – 215JM	1	116-0465	010		010	
	254JM – 256JM	1	116-0466	010		010	
	284JM – 326JM	1	116-0467	010		010	
	BRACKET (344A) EXCEPT 6 x 6 x 11 AND 6 x 6 x 11A						
	POWER FRAME #2 & #3	1	116-0466	010		010	
35	BRACKET (341A) 6 x 6 x 11 AND 6 x 6 x 11A ONLY						
	213JM – 215JM	1	116-0196	010		010	
	254JM – 256JM	1	116-0199	010		010	
	BRACKET (342A) 6 x 6 x 11 AND 6 x 6 x 11A ONLY						
	213JM – 215JM	1	116-0196	010		010	
	254JM – 256JM	1	116-0199	010		010	
	284JM – 326JM	1	116-0088	010		010	
	BRACKET (344A) 6 x 6 x 11 AND 6 x 6 x 11A ONLY						
	POWER FRAME #2 & #3	1	116-0199	010		010	
39	CAPSCREW (341A)						
	CAPSCREW (342A)						
	1-1/2 x 2 x 11	4	168-0560	082		082	
	2 x 3 x 11	4	168-0562	082		082	
	3 x 4 x 11	8	168-0564	082		082	
	4 x 5 x 11	8	168-0634	082		082	
	5 x 6 x 11	8	168-0634	082		082	
	6 x 6 x 11	8	168-0634	082		082	
	6 x 6 x 11A	8	168-0634	082		082	
	CAPSCREW (344A)						
	POWER FRAME #2 & #3	2	168-0490	082		082	
40	WASHER (341A)	NOT REQUIRED					
	WASHER (342A)	NOT REQUIRED					
	WASHER (344A)						
	POWER FRAME #2 & #3	2	908-0114	080		080	
41	SUPPORT (341)	NOT REQUIRED					
	SUPPORT (342)	NOT REQUIRED					
	SUPPORT (344)						
	POWER FRAME #2 & #3	1	820-0186	010		010	
42	DRIVE KEY (344)						
	POWER FRAME #2 & #3	1	472-0247	087		087	

PC. NO.	DESCRIPTION	QTY	PART NO.	MATERIAL B.F.		MATERIAL A.I.	
43	GREASE FITTING						
	POWER FRAME #2 & #3	1	508-0005	651		651	
47	SLINGER						
	POWER FRAME #2 & #3	1	764-1021	478		478	
47A	SLINGER						
	POWER FRAME #2	1	764-1021	478		478	
	POWER FRAME #3	1	764-1026	478		478	
48	CAPSCREW						
	POWER FRAME #2 & #3	4	168-0492	082		082	
49	BEARING CAP						
	POWER FRAME #2	1	164-0471	010		010	
	POWER FRAME #3	1	164-0472	010		010	
50	O-RING						
	POWER FRAME #2	1	364-0432	457		457	
	POWER FRAME #3	1	364-0438	457		457	
51	SEAL						
	POWER FRAME #2 & #3	1	712-0233	653		653	
	OIL LUBE						
	POWER FRAME #2 & #3	1	712-0054	653		653	
51A	SEAL						
	POWER FRAME #2	1	712-0233	653		653	
	POWER FRAME #3	1	712-0234	653		653	
	OIL LUBE						
	POWER FRAME #2	1	712-0054	653		653	
	POWER FRAME #3	1	712-0056	653		653	
52	RETAINING RING						
	POWER FRAME #2	1	676-0938	088		088	
	POWER FRAME #3	1	676-0944	088		088	
53	O.B. BEARING						
	POWER FRAME #2						
	STANDARD OPEN	1	068-2308	647		647	
	SEALED PERM LUBE	1	068-2220	647		647	
	POWER FRAME #3						
	STANDARD OPEN	1	068-2310	647		647	
	SEALED PERM LUBE	1	068-2221	647		647	
54	I.B. BEARING						
	POWER FRAME #2						
	STANDARD OPEN	1	068-0159	647		647	
	SEALED PERM LUBE	1	068-2018	647		647	
	POWER FRAME #3						
	STANDARD OPEN	1	068-0161	647		647	
	SEALED PERM LUBE	1	068-2022	647		647	
55	SHAFT						
	POWER FRAME #2	1	728-0122	063		063	
	POWER FRAME #3	1	728-0123	063		063	

© 2014 Pentair Ltd.

AURORA® 340A SERIES
MODELS 341A - 342A - 344A
1-1/2 x 2 x 11 – 6 x 6 x 11A

PARTS LIST

PC. NO.	DESCRIPTION	QTY	PART NO.	MATERIAL B.F.		MATERIAL A.I.	
57	FRAME						
	OIL LUBE						
	POWER FRAME #2	1	356-0232	010		010	
	GREASE						
	POWER FRAME #2	1	356-0202	010		010	
	OIL LUBE						
	POWER FRAME #3	1	356-0233	010		010	
	GREASE						
	POWER FRAME #3	1	356-0203	010		010	
58	GREASE FITTING						
	POWER FRAME #2 & #3	1	508-0001	651		651	
60	OILER						
	POWER FRAME #2 & #3	1	552-0029	652		652	
61	PIN	INCLUDED WITH NO. 25					
62	CAPSCREW						
	POWER FRAME #2 & #3	2	168-0490	082		082	
63	WASHER						
	POWER FRAME #2 & #3	1	908-0114	080		080	
64	SUPPORT						
	POWER FRAME #2 & #3	1	820-0189	010		010	
72	GASKET (342A)						
	1-1/2 x 3 x 11	1	364-0603	603		603	
	2 x 3 x 11	1	364-0605	603		603	
	3 x 4 x 11	1	364-0607	603		603	
	4 x 5 x 11	1	364-0608	603		603	
	5 x 6 x 11	1	364-0609	603		603	
	6 x 6 x 11	1	364-0609	603		603	
	6 x 6 x 11A	1	364-0609	603		603	

PC. NO.	DESCRIPTION	QTY	PART NO.	MATERIAL B.F.		MATERIAL A.I.	
73	BASE (342A)						
	1-1/2 x 3 x 11	1	816-1103	010		010	
	2 x 3 x 11	1	816-1105	010		010	
	3 x 4 x 11	1	816-1106	010		010	
	4 x 5 x 11	1	816-1107	010		010	
	5 x 6 x 11	1	816-1108	010		010	
	6 x 6 x 11	1	816-1108	010		010	
	6 x 6 x 11A	1	816-1108	010		010	
74	PIPE PLUG (342A)	1	600-0002	087		087	
75	PIPE PLUG (342A)						
	1-1/2 x 3 x 11	1	600-0003	087		087	
	2 x 3 x 11	1	600-0004	087		087	
	3 x 4 x 11	1	600-0004	087		087	
	4 x 5 x 11	1	600-0005	087		087	
	5 x 6 x 11	1	600-0005	028		028	
	6 x 6 x 11	1	600-0005	028		028	
	6 x 6 x 11A	1	600-0005	028		028	
	(NOT SHOWN)						
	SEAL KIT **(S)**	1	476-0250	644			
	(INCLUDES PIECE NO'S 8, 9, 9A, 9B, 9C, 10, 12, 25, 27)						
	SEAL KIT **(L)**	1	476-0253	644			

© 2014 Pentair Ltd.

AURORA® 340A SERIES
MODELS 341A- 342A- 344A
1-1/2 x 2 x 12 – 6 x 6 x 12A

PARTS LIST

PC. NO.	DESCRIPTION	QTY	PART NO.	MATERIAL B.F.		MATERIAL A.I.	
1	COMPRESSION ELBOW	1	868-3660	190		087	
2	COMPRESSION CONNECTOR	1	868-3359	190		087	
3	TUBING	1	872-0124	175		087	
4	PIPE PLUG	3	600-0002	087		087	
5	CAPSCREW	8	168-0489	082		082	
6	CASING						
	1-1/2 x 2 x 12	1	180-2161	010		010	
	2 x 2-1/2 x 12	1	180-2163	010		010	
	2-1/2 x 3 x 12	1	180-2164	010		010	
	3 x 4 x 12	1	180-2166	010		010	
	4 x 5 x 12	1	180-2168	010		010	
	5 x 6 x 12	1	180-2170	010		010	
	6 x 6 x 12	1	180-2172	010		010	
	6 x 6 x 12A	1	180-2363	010		010	
	VERTICAL						
	1-1/2 x 2 x 12	1	180-2201	010		010	
7	CASE RING						
	1-1/2 x 2 x 12	1	676-1151	208		010	
	2 x 2-1/2 x 12	1	676-1152	208		010	
	2-1/2 x 3 x 12	1	676-1152	208		010	
	3 x 4 x 12	1	676-1154	208		010	
	4 x 5 x 12	1	676-1155	208		010	
	5 x 6 x 12	1	676-1684	208		010	
	6 x 6 x 12	1	676-1684	208		010	
	6 x 6 x 12A	1	676-1684	208		010	
8	GASKET	1	364-1016	603		603	
9	CAPSCREW **(S)**	1	168-0382	113		113	
	(L)	1	168-0490	113		113	
9A	WASHER **(S)**	1	908-0603	087		087	
	(L)	1	908-0604	087		087	
9B	GASKET **(S)**	1	364-2034	603		603	
	(L)	1	364-2035	603		603	
9C	CAPSCREW **(S)**	1	908-1290	999		999	
	SEAL **(L)**	1	908-1292	999		999	
10	O-RING **(S)**	1	364-0409	457		457	
	(L)	1	364-0414	457		457	
11	IMPELLER **(S)**	341& 342A ONLY					
	1-1/2 x 2 x 12	1	443-1734	225		010	
	2 x 2-1/2 x 12	1	443-1735	225		010	
	2-1/2 x 3 x 12	1	443-1736	225		010	
	3 x 4 x 12	1	443-1737	225		010	
11	IMPELLER **(L)**						
	1-1/2 x 2 x 12	1	443-1725	225		010	
	2 x 2-1/2 x 12	1	443-1726	225		010	
	2-1/2 x 3 x 12	1	443-1727	225		010	
	3 x 4 x 12	1	443-1728	225		010	
	4 x 5 x 12	1	443-1729	225		010	
	5 x 6 x 12	1	443-1730	225		010	
	6 x 6 x 12	1	443-1732	225		010	
	6 x 6 x 12A	1	443-1732	225		010	
11A	IMPELLER **(S)***	341& 342A ONLY					
	1-1/2 x 2 x 12	1	443-1748	225		010	
	2 x 2-1/2 x 12	1	443-1753	225		010	
	2-1/2 x 3 x 12	1	443-1750	225		010	
	3 x 4 x 12	1	443-1751	225		010	
11A	IMPELLER **(L)***						
	1-1/2 x 2 x 12	1	443-1739	225		010	
	2 x 2-1/2 x 12	1	443-1740	225		010	
	2-1/2 x 3 x 12	1	443-1741	225		010	
	3 x 4 x 12	1	443-1742	225		010	
	4 x 5 x 12	1	443-1743	225		010	
	5 x 6 x 12	1	443-1744	225		010	
	6 x 6 x 12	1	443-1746	225		010	
	6 x 6 x 12A	1	443-1746	225		010	
12	IMPELLER KEY **(S)**	1	472-0201	087		087	
	(L)	1	472-0247	087		087	
14	IMPELLER RING (OPTIONAL)						
	1-1/2 x 2 x 12	1	676-1146	208		010	
	2 x 2-1/2 x 12	1	676-1133	208		010	
	2-1/2 x 3 x 12	1	676-1133	208		010	
	3 x 4 x 12	1	676-1140	208		010	
	4 x 5 x 12	1	676-1141	208		010	
	5 x 6 x 12	1	676-1143	208		010	
	6 x 6 x 12	1	676-1143	208		010	
	6 x 6 x 12A	1	676-1143	208		010	
15	IMPELLER RING (OPTIONAL)						
	2 x 2-1/2 x 12	1	676-1133	208		010	
	2-1/2 x 3 x 12	1	676-1133	208		010	
	3 x 4 x 12	1	676-1156	208		010	
	4 x 5 x 12	1	676-1156	208		010	
	5 x 6 x 12	1	676-1156	208		010	
	6 x 6 x 12	1	676-1156	208		010	
	6 x 6 x 12A	1	676-1156	208		010	
16	RING						
	2 x 2-1/2 x 12	1	676-0003	010		010	
	2-1/2 x 3 x 12	1	676-0003	010		010	
25	SLEEVE **(S)**	1	756-0077	208		104	
	(L)	1	756-0078	208		104	
27	SEAL **(S)**	1	712-0907	753		753	
	(L)	1	712-0910	753		753	

*MACHINED FOR OPTIONAL RING NUMBERS 14 & 15

© 2014 Pentair Ltd.

AURORA® 340A SERIES
MODELS 341A- 342A- 344A
1-1/2 x 2 x 12 – 6 x 6 x 12A

PARTS LIST

PC. NO.	DESCRIPTION	QTY	PART NO.	MATERIAL B.F.		MATERIAL A.I.	
32	CAPSCREW (341 & 342)						
	213JM – 215JM	4	168-0490	082		082	
	254JM – 256JM	4	168-0492	082		082	
	284JM – 326JM	4	168-0562	082		082	
	CAPSCREW (344)						
	POWER FRAME #2 & #3	4	168-0492	082		082	
33	U DRIVE SCREW	2	708-0013	365		365	
34	NAMEPLATE	1	532-0045	114		114	
35	BRACKET (341A)						
	213JM – 215JM	1	116-0196	010		010	
	254JM – 256JM	1	116-0199	010		010	
	BRACKET (342A)						
	213JM – 215JM	1	116-0196	010		010	
	254JM – 256JM	1	116-0199	010		010	
	284JM – 326JM	1	116-0088	010		010	
	BRACKET (344A)						
	POWER FRAME #2 & #3	1	116-0199	010		010	
39	CAPSCREW (341A)	NOT REQUIRED					
	CAPSCREW (342A)						
	1-1/2 x 2 x 12	4	168-0560	082		082	
	2 x 2-1/2 x 12	4	168-0562	082		082	
	2-1/2 x 3 x 12	4	168-0562	082		082	
	3 x 4 x 12	4	168-0564	082		082	
	4 x 5 x 12	4	168-0634	082		082	
	5 x 6 x 12	4	168-0634	082		082	
	6 x 6 x 12 & 12A	4	168-0634	082		082	
	CAPSCREW (344A)						
	POWER FRAME #2 & #3	2	168-0490	082		082	
40	WASHER (341A)	NOT REQUIRED					
	WASHER (342A)	NOT REQUIRED					
	WASHER (344A)						
	POWER FRAME #2 & #3	2	908-0114	080		080	
41	SUPPORT (341A)						
	213JM – 215JM	NOT REQUIRED					
	254JM – 256JM	NOT REQUIRED					
	SUPPORT (344)						
	POWER FRAME #2 & #3	1	820-0186	010		010	
42	DRIVE KEY	1	472-0247	087		087	
43	GREASE FITTING	1	508-0005	657		651	
44	VENT TUBE	1	864-0051	656		656	
46	PROTECTOR	2	624-0010	503		503	
47	SLINGER						
	POWER FRAME #2 & #3	1	764-1021	478		478	
47A	SLINGER						
	POWER FRAME #2	1	764-1021	478		478	
	POWER FRAME #3	1	764-1026	478		478	

PC. NO.	DESCRIPTION	QTY	PART NO.	MATERIAL B.F.		MATERIAL A.I.	
48	CAPSCREW						
	POWER FRAME #2 & #3	4	168-0492	082		082	
49	BEARING CAP						
	POWER FRAME #2	1	164-0471	010		010	
	POWER FRAME #3	1	164-0472	010		010	
50	O-RING						
	POWER FRAME #2	1	364-0432	457		457	
	POWER FRAME #3	1	364-0438	457		457	
51	SEAL						
	POWER FRAME #2 & #3	1	712-0233	653		653	
	OIL LUBE						
	POWER FRAME #2 & #3	1	712-0054	653		653	
51A	SEAL						
	POWER FRAME #2	1	712-0233	653		653	
	POWER FRAME #3	1	712-0234	653		653	
	OIL LUBE						
	POWER FRAME #2	1	712-0054	653		653	
	POWER FRAME #3	1	712-0056	653		653	
52	RETAINING RING						
	POWER FRAME #2	1	676-0938	088		088	
	POWER FRAME #3	1	676-0944	088		088	
53	O.B. BEARING						
	POWER FRAME #2						
	STANDARD OPEN	1	068-2308	647		647	
	SEALED PERM LUBE	1	068-2220	647		647	
	POWER FRAME #3						
	STANDARD OPEN	1	068-2310	647		647	
	SEALED PERM LUBE	1	068-2221	647		647	
54	I.B. BEARING						
	POWER FRAME #2						
	STANDARD OPEN	1	068-0159	647		647	
	SEALED PERM LUBE	1	068-2018	647		647	
	POWER FRAME #3						
	STANDARD OPEN	1	068-0161	647		647	
	SEALED PERM LUBE	1	068-2022	647		647	
55	SHAFT						
	POWER FRAME #2	1	728-0122	063		063	
	POWER FRAME #3	1	728-0123	063		063	
56	PROTECTOR	2	624-0010	503		503	

© 2014 Pentair Ltd.

AURORA® 340A SERIES
MODELS 341A- 342A- 344A
1-1/2 x 2 x 12 – 6 x 6 x 12A

PARTS LIST

PC. NO.	DESCRIPTION	QTY	PART NO.	MATERIAL B.F.		MATERIAL A.I.	
57	FRAME						
	OIL LUBE						
	POWER FRAME #2	1	356-0232	010		010	
	POWER FRAME #3	1	356-0233	010		010	
	GREASE						
	POWER FRAME #2	1	356-0202	010		010	
	POWER FRAME #3	1	356-0203	010		010	
58	GREASE FITTING	1	508-0001	651		651	
59	PIPE PLUG						
	POWER FRAME #2 & #3	2	600-0001	087		087	
60	OILER	1	522-0029	652		652	
61	PIN	INCLUDED WITH NO. 25					
62	CAPSCREW						
	POWER FRAME #2 & #3	2	168-0490	082		082	
63	WASHER	2	908-0114	080		080	
64	SUPPORT						
	POWER FRAME #2 & #3	1	820-0189	010		010	
72	GASKET						
	1-1/2 x 2 x 12	1	364-0603	603		603	
	2 x 2-1/2 x 12	1	364-0604	603		603	
	2-1/2 x 3 x 12	1	364-0605	603		603	
	3 x 4 x 12	1	364-0607	603		603	
	4 x 5 x 12	1	364-0609	603		603	
	5 x 6 x 12	1	364-0609	603		603	
	6 x 6 x 12 & 12A	1	364-0609	603		603	

PC. NO.	DESCRIPTION	QTY	PART NO.	MATERIAL B.F.		MATERIAL A.I.	
73	BASE						
	1-1/2 x 2 x 12	1	816-1103	010		010	
	2 x 2-1/2 x 12	1	816-1104	010		010	
	2-1/2 x 3 x 12	1	816-1105	010		010	
	3 x 4 x 12	1	816-1106	010		010	
	4 x 5 x 12	1	816-1108	010		010	
	5 x 6 x 12	1	816-1108	010		010	
	6 x 6 x 12 & 12A	1	816-1108	010		010	
74	PIPE PLUG	1	600-0002	087		087	
75	PIPE PLUG						
	1-1/2 x 2 x 12	1	600-0003	087		087	
	2 x 2-1/2 x 12	1	600-0003	087		087	
	2-1/2 x 3 x 12	1	600-0004	087		087	
	3 x 4 x 12	1	600-0004	028		028	
	4 x 5 x 12	1	600-0005	028		028	
	5 x 6 x 12	1	600-0005	028		028	
	6 x 6 x 12 & 12A	1	600-0005	028		028	
	(NOT SHOWN)						
	SEAL KIT **(S)**	1	476-0250	644			
	(INCLUDES PIECE NO'S 8, 9, 9A, 9B, 9C, 10, 12, 25, 27)						
	SEAL KIT **(L)**	1	476-0253	644			

© 2014 Pentair Ltd.

AURORA® 340A SERIES
MODELS 341A- 342A- 344A
6 x 6 x 12B – 6 x 8 x 15 – 8 x 10 x 15

PARTS LIST

PC. NO.	DESCRIPTION	QTY	PART NO.	MATERIAL			
				B.F.		A.I.	
1	COMP. ELBOW	1	868-3660	190		087	
2	COMP. CONN.	1	868-3359	190		087	
3	TUBING	1	872-0124	175		087	
4	PIPE PLUG	3	600-0002	087		087	
5	CAPSCREW						
	6 x 6 x 12B	8	168-0489	082		082	
	6 x 8 x 15	12	168-0636	082		082	
	8 x 10 x 15	12	168-0636	082		082	
6	CASING						
	6 x 6 x 12B	1	180-2516	010		010	
	6 x 8 x 15	1	180-2366	010		010	
	8 x 10 x 15	1	180-2367	010		010	
7	CASE RING						
	6 x 6 x 12B	1	676-2100	208		010	
	6 x 8 x 15	2	676-2036	222		010	
	8 x 10 x 15	2	676-2037	222		010	
8	GASKET						
	12"	1	364-1016	603		603	
	15"	1	364-0557	457		457	
9A	WASHER	1	908-1326	104		104	
9B	GASKET	1	364-2046	603		603	
10	O-RING	1	364-0419	457		457	
11	IMPELLER						
	6 x 6 x 12B (L)	1	443-2664	225		010	
	6 x 6 x 12B (XL)	1	443-3087	208		–	
	6 x 8 x 15	1	443-3088	208		010	
	8 x 10 x 15	1	443-3090	208		010	
11A*	IMPELLER						
	6 x 6 x 12B (L)	1	443-2977	225		010	
	6 x 6 x 12B (XL)	1	443-3087	208		–	
	6 x 8 x 15	1	443-3089	208		010	
	8 x 10 x 15	1	443-3091	208		010	
12	IMPELLER KEY	1	472-0318	087		087	
14	IMPELLER RING, OPTIONAL						
	6 x 6 x 12B	1	676-2101	208		010	
	6 x 8 x 15	1	676-1053	208		010	
	8 x 10 x 15	1	676-1971	208		010	
15	IMPELLER RING, OPTIONAL						
	6 x 6 x 12B	1	676-2101	208		010	
	6 x 8 x 15	1	676-1053	208		010	
	8 x 10 x 15	1	676-1053	208		010	
25	SHAFT SLEEVE	1	756-0692	208		104	
27	MECHANICAL SEAL	1	712-1014	753		753	
32	CAPSCREW						
	326 – 405 TCZ	4	168-0564	082		082	
	444TCZ +	8	168-0566	082		082	
33	WASHER	2	708-0013	365		365	

PC. NO.	DESCRIPTION	QTY	PART NO.	MATERIAL			
				B.F.		A.I.	
34	NAME PLATE	1	532-0045	114		114	
35	BRACKET						
	12", 326 – 405 TCZ	1	116-0538	010		010	
	15", 326 – 405 TCZ	1	116-0537	010		010	
	15", 444 TCZ +	1	116-0539	010		010	

*MACHINED FOR OPTIONAL IMPELLER WEAR RINGS, ITEMS 14 & 15
(XL = EXTRA LARGE BORE)

© 2014 Pentair Ltd.

WARRANTY

Seller warrants equipment (and its component parts) of its own manufacture against defects in materials and workmanship under normal use and service for one (1) year from the date of installation or start-up, or for eighteen (18) months after the date of shipment , whichever occurs first. Seller does not warrant accessories or components that are not manufactured by Seller; however, to the extent possible, Seller agrees to assign to Buyer its rights under the original manufacturer's warranty, without recourse to Seller. Buyer must give Seller notice in writing of any alleged defect covered by this warranty (together with all identifying details, including the serial number, the type of equipment, and the date of purchase) within thirty (30) days of the discovery of such defect during the warranty period. No claim made more than 30 days after the expiration of the warranty period shall be valid. Guarantees of performance and warranties are based on the use of original equipment manufactured (OEM) replacement parts. Seller assumes no responsibility or liability if alterations, non-authorized design modifications and/or non-OEM replacement parts are incorporated If requested by Seller, any equipment (or its component parts) must be promptly returned to Seller prior to any attempted repair, or sent to an authorized service station designated by Seller, and Buyer shall prepay all shipping expenses. Seller shall not be liable for any loss or damage to goods in transit, nor will any warranty claim be valid unless the returned goods are received intact and undamaged as a result of shipment. Repaired or replaced material returned to customer will be shipped F.O.B., Seller's factory. Seller will not give Buyer credit for parts or equipment returned to Seller, and will not accept delivery of any such parts or equipment, unless Buyer has obtained Seller's approval in writing. The warranty extends to repaired or replaced parts of Seller's manufacture for ninety (90) days or for the remainder of the original warranty period applicable to the equipment or parts being repaired or replaced, whichever is greater. This warranty applies to the repaired or replaced part and is not extended to the product or any other component of the product being repaired. Repair parts of its own manufacture sold after the original warranty period are warranted for a period of one (1) year from shipment against defects in materials and workmanship under normal use and service. This warranty applies to the replacement part only and is not extended to the product or any other component of the product being repaired. Seller may substitute new equipment or improve part(s) of any equipment judged defective without further liability. All repairs or services performed by Seller, which are not covered by this warranty, will be charged in accordance with Seller's standard prices then in effect.

THIS WARRANTY IS THE SOLE WARRANTY OF SELLER AND SELLER HEREBY EXPRESSLY DISCLAIMS AND BUYER WAIVES ALL OTHER WARRANTIES EXPRESSED, IMPLIED IN LAW OR IMPLIED IN FACT, INCLUDING ANY WARRANTIES OF MERCHANTABILITY OR FITNESS FOR A PARTICULAR PURPOSE. Seller's sole obligation under this warranty shall be, at its option, to repair or replace any equipment (or its component parts) which has a defect covered by this warranty, or to refund the purchase price of such equipment or part. Under the terms of this warranty, Seller shall not be liable for (a) consequential, collateral, special or liquidated losses or damages; (b) equipment conditions caused by normal wear and tear, abnormal conditions of use, accident, neglect, or misuse of said equipment; (c) the expense of, and loss or damage caused by, repairs or alterations made by anyone other than the Seller; (d) damage caused by abrasive materials, chemicals, scale deposits, corrosion, lightning, improper voltage, mishandling, or other similar conditions; (e) any loss, damage, or expense relating to or resulting from installation, removal or reinstallation of equipment; (f) any labor costs or charges incurred in repairing or replacing defective equipment or parts, including the cost of reinstalling parts that are repaired or replaced by Seller; (g) any expense of shipment of equipment or repaired or replacement parts; or (h) any other loss, damage or expense of any nature.

The above warranty shall not apply to any equipment which may be separately covered by any alternate or special warranties.

PERFORMANCE: In the absence of Certified Pump Performance Tests, equipment performance is not warranted or guaranteed. Performance curves and other information submitted to Buyer are approximate and no warranty or guarantee shall be deemed to arise as a result of such submittal. All testing shall be done in accordance with Seller's standard policy under Hydraulic Institute procedures.

LIABILITY LIMITATIONS: Under no circumstances shall the Seller have any liability under the Order or otherwise for liquidated damages or for collateral, consequential or special damages or for loss of profits, or for actual losses or for loss of production or progress of construction, regardless of the cause of such damages or losses. In any event, Seller's aggregate total liability under the Order or otherwise shall not exceed the contract price.

ACTS OF GOD: Seller shall in no event be liable for delays in delivery of the equipment or other failures to perform caused by fires, acts of God, strikes, labor difficulties, acts of governmental or military authorities, delays in transportation or procuring materials, or causes of any kind beyond Seller's control.

COMPLIANCE WITH LAW: Seller agrees to comply with all United States laws and regulations applicable to the manufacturing of the subject equipment. Such compliance shall include: The Fair Labor Standards Acts of 1938, as amended; Equal Employment Opportunity clauses of Executive Order 11246, as amended; Occupational Safety and Health Act of 1970 and the standards promulgated thereunder, if applicable. Since compliance with the various Federal, State, and Local laws and regulations concerning occupational health and safety, pollution or local codes are affected by the use, installation and operation of the equipment and other matters over which Seller has no control, Seller assumes no responsibility for compliance with those laws and regulations, whether by way of indemnity, warranty, or otherwise. It is incumbent upon the Buyer to specify equipment which complies with local codes and ordinances.

PENTAIR

AURORA®
800 Airport Road
North Aurora, Illinois 60542
630-859-7000
www.aurorapump.com

ALTIVAR 31 DRIVES

THE FLEXIBLE DRIVE THAT STRETCHES TO YOUR NEEDS. THE ALTIVAR 31 VARIABLE SPEED DRIVES FOR SINGLE AND 3-PHASE ASYNCHRONOUS MOTORS FROM 0.18 TO 15 KW CAN BE USED FOR A VARIETY OF APPLICATIONS: MATERIALS HANDLING, PUMPS, VENTILATION, SPECIAL MACHINES, TEXTILE MACHINES AND PACKAGING/ PACKING...

FLEXIBLE – EASY TO CUSTOMISE

The Altivar 31 takes into account the characteristics of each machine, the different variants available make this drive extraordinarily flexible. With versions available in an IP55 enclosure, the Altivar 31 remains reliable and accessible in harsh environments.

Customisable

The drive is supplied on its own or an IP55 enclosure and according to your requirements, you can also integrate the various components that are necessary for your application (switch disconnector or circuit breaker, switches, pilot lights, potentiometer, etc.).

COMPACT – SPACE SAVING

The Altivar 31 IP20 version saves space in the design and installation of your enclosures as it is exceptionally compact, with integrated EMC level A filters and the possibility of side by side mounting without derating.

SIMPLE – EASY TO PROGRAMME

High performance and functionality are standard with the Altivar 31, yet it still remains simple.

Quick and easy to set-up

- 'Plug and drive', the Altivar 31 takes control of your machine as soon as it is plugged in
- Autotuning; it quickly adapts to the motor and provides dynamic performance in complete safety
- Efficient; it meets the requirements of your applications using a few simple parameters via the built-in display

Extended functions

PowerSuite™ software allows the preparation and saving of configuration files and in connected mode allows configuration, adjustment, control monitoring of the drive or downloading of files.

OPEN – FIELDBUS CONNECTIVITY

Altivar 31 is highly adaptable: it easily integrates into automation systems due to open access. With integrated Modbus and CANopen communication networks available as standard, the Altivar 31 increases your connection possibilities for industrial automation systems. The operation and maintenance of installations is even more efficient since you benefit, in real time, of having precise information regarding your process.

For more information on Altivar 31 drives and climate control request you free CD-ROM from RS.

From machine design through to machine maintenance, the Altivar 31 is the perfect partner for your application.

Do great things

ENERGY & COST SAVINGS FROM ALTIVAR 31 DRIVES

DID YOU REALISE THAT AROUND 60% OF INDUSTRIAL ENERGY IS CONSUMED BY ELECTRIC MOTORS?

Motors are being developed to be more energy efficient; but the additional use of variable speed drive (VSD) technology, allows far larger contributions towards saving energy to be made. The NEW Altivar 31 variable speed drives from Telemecanique deliver a rapid payback not only through electricity bill savings, but also via the Government's "Enhanced Capital Allowance" (ECA) scheme.

SIMPLE CONNECTION

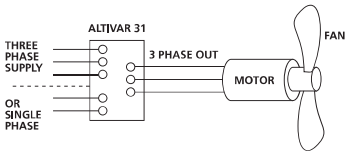

ENERGY SAVING & COST REDUCTION

Fans and pumps are used extensively throughout industry in many different applications and traditionally where variable flow is required, mechanical methods have been used (valves, dampers, venting, by-pass and stop/start cycles); but the motor runs at full speed and power which is very inefficient. Direct on-line starting can also reduce the life of the motor life.

The use of variable speed drive technology gives the added benefit of motor soft starting and stopping.

When an inverter is used to vary the speed of the fan or pump, enormous energy savings are possible, when you consider the power consumed is proportional to the speed cubed. For example, a 20% reduction in speed saves 50% of the power; the mechanical flow controlled system would require near full power!

Virtually every motor application will gain from the use of Altivar 31 when considering the benefits of reduced mechanical wear and tear on the system components.

PAYBACK BENEFITS

It can take as little as 9 months for a variable speed drive from Telemecanique to pay for itself in saved electricity costs, thereafter providing ongoing long term energy saving and cost savings. On top of this energy saving payback, when you purchase any variable speed drive from Telemecanique you will be able to claim capital allowances recoverable under the Government's Enhanced Capital Allowances (ECA) scheme.

To find out more, visit:
www.eca.gov.uk/etl

All Telemecanique Altivar variable speed drives are registered on the ECA list.

For more tech info • http://rswww.com

Telemecanique

NEW

COMPACT IP20 ALTIVAR 31 CHASSIS MOUNT

A highly compact sensorless vector drive with side by side mounting capability up to 50°C ambient with inbuilt class A EMC filter, gives superb functionality including auto-tuning, brake-logic control, multi-assign logic inputs, dynamic braking, catch on the fly, 16 preset speeds, open connectivity to CANopen, Modbus as standard, and Ethernet, Profibus, DeviceNet, through the use of gateways.

RS STOCK NO	POWER	PRICE
THREE PHASE - CHASSIS MOUNT		
477-5073DX	0.37kW	£189.00
477-5089DX	0.55kW	£207.00
477-5095DX	0.75kW	£212.00
477-5102DX	1.1kW	£231.00
477-5118DX	1.5kW	£247.00
477-5124DX	2.2kW	£358.00
477-5130DX	3kW	£418.00
477-5146DX	4kW	£465.00
SINGLE PHASE - CHASSIS MOUNT		
477-4991DX	0.18kW	£102.00
477-5001DX	0.37kW	£112.00
477-5023DX	0.55kW	£128.00
477-5039DX	0.75kW	£139.00
477-5045DX	1.1kW	£158.00
477-5051DX	1.5kW	£175.00
477-5067DX	2.2kW	£212.00

CUSTOMISABLE IP55 ALTIVAR 31 ENCLOSED

A totally enclosed drive protected to IP55 standards with bags of flexibility to customise the unit to suit all you application needs. Knockout covers on the front provide access to fit options such as Vario switches and Harmony pushbuttons and pilot lights from Telemecanique.

RS STOCK NO	POWER	PRICE
SINGLE PHASE - ENCLOSED		
477-5203DX	0.18kW	£190.00
477-5275DX	2.2kW	£312.00
THREE PHASE - ENCLOSED		
477-5281DX	0.37kW	£229.00
477-5354DX	4kW	£474.00

For the full range and further information visit rswww.com/automation or see Book 1 pages 870-871

Do great things

RS

Product data sheet
Characteristics

ATV31HU75N4
variable speed drive ATV31 - 7.5kW - 500V 3-phase supply - EMC filter - IP20

Main

Range of product	Altivar
Product or component type	Variable speed drive
Product specific application	Simple machine
Component name	ATV31
Assembly style	With heat sink
EMC filter	Integrated
[Us] rated supply voltage	380...500 V - 5...5 %
Supply frequency	50...60 Hz - 5...5 %
Network number of phases	3 phases
Motor power kW	7.5 kW 4 kHz
Motor power hp	10 hp 4 kHz
Line current	21 A 500 V 27.7 A 380 V 1 kA
Apparent power	18 kVA
Prospective line Isc	1 kA
Nominal output current	17 A 4 kHz
Maximum transient current	25.5 A 60 s
Power dissipation in W	269 W at nominal load
Asynchronous motor control profile	Factory set : constant torque Sensorless flux vector control with PWM type motor control signal

Complementary

Product destination	Asynchronous motors
Supply voltage limits	323...550 V
Network frequency limits	47.5...63 Hz
Speed drive output frequency	0.5...500 Hz
Nominal switching frequency	4 kHz
Switching frequency	2...16 kHz adjustable
Speed range	1...50
Transient overtorque	150...170 % of nominal motor torque
Braking torque	100 % with braking resistor continuously 150 % without braking resistor ≤ 150 % with braking resistor 60 s
Regulation loop	Frequency PI regulator
Motor slip compensation	Adjustable Automatic whatever the load Suppressable
Output voltage	<= power supply voltage
Electrical connection	Terminal 2.5 mm² AWG 14 AI1, AI2, AI3, AOV, AOC, R1A, R1B, R1C, R2A, R2B, LI1...LI6 Terminal 2.5 mm² AWG 14 L1, L2, L3, U, V, W, PA, PB, PA/+, PC/-
Tightening torque	0.6 N.m AI1, AI2, AI3, AOV, AOC, R1A, R1B, R1C, R2A, R2B, LI1...LI6 0.8 N.m L1, L2, L3, U, V, W, PA, PB, PA/+, PC/-
Insulation	Electrical between power and control

The information provided in this documentation contains general descriptions and/or technical characteristics of the performance of the products contained herein.
This documentation is not intended as a substitute for and is not to be used for determining suitability or reliability of these products for specific user applications.
It is the duty of any such user or integrator to perform the appropriate and complete risk analysis, evaluation and testing of the products with respect to the relevant specific application or use thereof.
Neither Schneider Electric Industries SAS nor any of its affiliates or subsidiaries shall be responsible or liable for misuse of the information contained herein.

Supply	Internal supply for logic inputs 19...30 V ≤ 100 mA overload and short-circuit protection Internal supply for reference potentiometer (2.2 to 10 kOhm) 10...10.8 V ≤ 10 mA overload and short-circuit protection
Analogue input number	3
Analogue input type	Configurable current AI3 0...20 mA 250 Ohm Configurable voltage AI1 0...10 V 30 V max 30000 Ohm Configurable voltage AI2 +/- 10 V 30 V max 30000 Ohm
Sampling duration	4 ms LI1...LI6 discrete 8 ms AI1, AI2, AI3 analog
Response time	8 ms discrete R1A, R1B, R1C, R2A, R2B 8 ms analog AOV, AOC
Linearity error	+/- 0.2 % output
Analogue output number	2
Analogue output type	Configurable current AOC 0...20 mA 800 Ohm 8 bits Configurable voltage AOV 0...10 V 470 Ohm 8 bits
Discrete input logic	Logic input not wired LI1...LI4 < 13 V Negative logic (source) LI1...LI6 > 19 V Positive logic (source) LI1...LI6 < 5 V > 11 V
Discrete output number	2
Discrete output type	Configurable relay logic R1A, R1B, R1C 1 NO + 1 NC 100000 cycles Configurable relay logic R2A, R2B NC 100000 cycles
Minimum switching current	10 mA 5 V DC R1-R2
Maximum switching current	2 A 250 V AC inductive cos phi = 0.4 7 ms R1-R2 2 A 30 V DC inductive cos phi = 0.4 7 ms R1-R2 5 A 250 V AC resistive cos phi = 1 0 ms R1-R2 5 A 30 V DC resistive cos phi = 1 0 ms R1-R2
Discrete input number	6
Discrete input type	Programmable LI1...LI6 24 V 0...100 mA PLC 3500 Ohm Programmable LI1...LI6 24 V 0...100 mA PLC 3500 Ohm
Acceleration and deceleration ramps	S, U or customized Linear adjustable separately from 0.1 to 999.9 s
Braking to standstill	By DC injection
Protection type	Input phase breaks drive Line supply overvoltage and undervoltage safety circuits drive Line supply phase loss safety function, for three phases supply drive Motor phase breaks drive Overcurrent between output phases and earth (on power up only) drive Overheating protection drive Short-circuit between motor phases drive Thermal protection motor
Insulation resistance	≥ 500 MOhm 500 V DC for 1 minute
Display type	1 LED red drive voltage Four 7-segment display units CANopen bus status
Time constant	5 ms for reference change
Frequency resolution	0.1...100 Hz analog input 0.1 Hz display unit
Type of connector	1 RJ45 Modbus 1 RJ45 CANopen via VW3 CANTAP2 adaptor
Physical interface	RS485 multidrop serial link Modbus RS485 multidrop serial link CANopen via VW3 CANTAP2 adaptor
Transmission frame	RTU Modbus RTU CANopen via VW3 CANTAP2 adaptor
Transmission rate	10, 20, 50, 125, 250, 500 kbps or 1 Mbps CANopen via VW3 CANTAP2 adaptor 4800, 9600 or 19200 bps Modbus
Number of addresses	1...127 CANopen via VW3 CANTAP2 adaptor 1...247 Modbus
Number of drive	31 Modbus 127 CANopen via VW3 CANTAP2 adaptor
Marking	CE
Operating position	Vertical +/- 10 degree
Outer dimension	232 x 180 x 170 mm 300 x 210 x 170 mm 405 x 234 x 268 mm
Product weight	6.5 kg

Environment

Dielectric strength	2410 V DC between earth and power terminals 3400 V AC between control and power terminals
Electromagnetic compatibility	1.2/50 µs - 8/20 µs surge immunity test level 3 IEC 61000-4-5 Electrical fast transient/burst immunity test level 4 IEC 61000-4-4 Electrostatic discharge immunity test level 3 IEC 61000-4-2 Radiated radio-frequency electromagnetic field immunity test level 3 IEC 61000-4-3
Standards	EN 50178
Product certifications	C-Tick CSA N998 UL
IP degree of protection	IP20 on upper part without cover plate IP21 on connection terminals IP31 on upper part IP41 on upper part
Pollution degree	2
Protective treatment	TC
Vibration resistance	1 gn 13...150 Hz EN/IEC 60068-2-6 1.5 mm 3...13 Hz EN/IEC 60068-2-6
Shock resistance	15 gn 11 ms EN/IEC 60068-2-27
Relative humidity	5...95 % without condensation IEC 60068-2-3 5...95 % without dripping water IEC 60068-2-3
Ambient air temperature for storage	-25...70 °C
Ambient air temperature for operation	-10...50 °C without derating with protective cover on top of the drive -10...60 °C with derating factor without protective cover on top of the drive
Operating altitude	≤ 1000 m without derating ≥ 1000 m with current derating 1 % per 100 m
RoHS EUR conformity date	0719
RoHS EUR status	Compliant

Altivar 31

Guide simplifié
Simplified manual
Kurzanleitung
Guía simplificada
Guida semplificata

Variateurs de vitesse
pour moteurs asynchrones
Variable speed drives
for asynchronous motors
Frequenzumrichter
für Asynchronmotoren
Variadores de velocidad
para motores asíncronos
Variatori di velocità
per motori asincroni

a brand of Schneider Electric

Telemecanique

FRANÇAIS

ENGLISH

DEUTSCH

ESPAÑOL

ITALIANO

Variateurs de vitesse pour moteurs asynchrones **Page 1**

Variable speed drives for asynchronous motors **Page 17**

Frequenzumrichter für Asynchronmotoren **Seite 33**

Variadores de velocidad para motores asíncronos **Página 49**

Variatori di velocità per motori asincroni **Pagina 65**

Sommaire

Recommandations préliminaires _____ 2
Les étapes de la mise en œuvre _____ 3
Configuration usine _____ 4
Remplacement d'un ATV 28 par un ATV 31 _____ 4
Compatibilité électromagnétique _____ 5
Fonctions de l'afficheur et des touches _____ 6
Accès aux menus _____ 7
Configuration du paramètre bFr _____ 8
Menu réglages SEt- _____ 8
Menu contrôle moteur drC- _____ 10
Menu Entrées /sorties I-O- _____ 12
Menu Surveillance SUP- _____ 13
Défauts - causes - remèdes _____ 15

En exploitation le moteur peut être arrêté, par suppression des ordres de marche ou de la consigne vitesse, alors que le variateur reste sous tension. Si la sécurité du personnel exige l'interdiction de tout redémarrage intempestif, ce verrouillage électronique est insuffisant : *Prévoir une coupure sur le circuit de puissance.*

Le variateur comporte des dispositifs de sécurité qui peuvent en cas de défauts commander l'arrêt du variateur et par là-même l'arrêt du moteur. Ce moteur peut lui-même subir un arrêt par blocage mécanique. Enfin, des variations de tension, des coupures d'alimentation en particulier, peuvent également être à l'origine d'arrêts.
La disparition des causes d'arrêt risque de provoquer un redémarrage entraînant un danger pour certaines machines ou installations, en particulier pour celles qui doivent être conformes aux réglementations relatives à la sécurité.

Il importe donc que, dans ces cas-là, l'utilisateur se prémunisse contre ces possibilités de redémarrage notamment par l'emploi d'un détecteur de vitesse basse, provoquant en cas d'arrêt non programmé du moteur, la coupure de l'alimentation du variateur.

L'installation et la mise en œuvre de ce variateur doivent être effectuées conformément aux normes internationales IEC et aux normes nationales de son lieu d'utilisation. Cette mise en conformité est de la responsabilité de l'intégrateur qui doit respecter entre autres, pour la communauté européenne, la directive CEM.
Le respect des exigences essentielles de la directive CEM est conditionné notamment par l'application des prescriptions contenues dans ce document.

L'Altivar 31 doit être considéré comme un composant, ce n'est ni une machine ni un appareil prêt à l'utilisation selon les directives européennes (directive machine et directive compatibilité électromagnétique). Il est de la responsabilité du client final de garantir la conformité de sa machine à ces normes

Le variateur ne doit pas être utilisé comme organe de sécurité pour les machines présentant un risque matériel ou humain (appareils de levage par exemple). Les surveillances de survitesse ou de non contrôle de trajectoire doivent être assurées dans ces cas là par des organes distincts et indépendants du variateur.

Les produits et matériels présentés dans ce document sont à tout moment susceptibles d'évolution ou de modification tant au plan technique et d'aspect que de l'utilisation. Leur description ne peut en aucun cas revêtir un aspect contractuel.

Recommandations préliminaires

Ce guide simplifié décrit la mise en œuvre minimale, pour la configuration usine du variateur.

Tous les fonctionnements, paramètres et défauts décrits dans ce document concernent la configuration usine. Si cette configuration a été modifiée par un des menus CtL-, FUn- ou FLt-, des différences peuvent apparaître. Le cédérom fourni avec le variateur comporte la description complète ainsi que tous les menus de configuration.

Avant de mettre sous tension et de configurer le variateur

- **Vérifier que la tension du réseau est compatible avec la plage de tension d'alimentation du variateur. Risque de destruction si non respect de la tension réseau.**
- **Mettre les entrées logiques hors tension (état 0) pour éviter tout démarrage intempestif. A défaut, à la sortie des menus de configuration, une entrée affectée à un ordre de marche entraînerait immédiatement le démarrage du moteur.**

Réglage utilisateur et extensions de fonctionnalités

Si nécessaire, l'afficheur et les boutons permettent la modification des réglages et l'extension des fonctionnalités. Le **retour au réglage usine** est possible aisément par le paramètre FCS du menu drC-.
Les paramètres sont de trois types :
- affichage : valeurs affichées par le variateur
- réglage : modifiables en fonctionnement et à l'arrêt
- configuration : seulement modifiables à l'arrêt et hors freinage. Visualisables en fonctionnement

.

- **S'assurer que les changements de réglages en cours de fonctionnement ne présentent pas de danger ; les effectuer de préférence à l'arrêt.**

Démarrage

Important : en réglage usine, lors d'une mise sous tension ou d'une remise à zéro de défaut manuelle ou après une commande d'arrêt, le moteur ne peut être alimenté qu'après une remise à zéro préalable des ordres "avant", "arrière". A défaut, le variateur affiche "nst" mais ne démarre pas.

Essai sur moteur de faible puissance ou sans moteur

En réglage usine, la détection perte phase moteur est active. Pour vérifier le variateur dans un environnement de test ou de maintenance, et sans avoir recours à un moteur équivalent au calibre du variateur (en particulier pour les variateurs de fortes puissances), désactiver la détection de phase moteur et configurer la loi tension / fréquence UFt = L (voir cédérom).

Utilisation sur réseau IT

Réseau IT : Neutre isolé ou impédant.
Utiliser un contrôleur permanent d'isolement compatible avec les charges non linéaires : type XM200 de marque Merlin Gerin, par exemple.
Les ATV 31●●●M2 et N4 comportent des filtres RFI intégrés. Pour utilisation sur réseau IT, il est possible de déconnecter ces filtres de la masse.
Consulter le cédérom fourni avec le variateur.

Les étapes de la mise en œuvre

1 - Réceptionner le variateur

- S'assurer que la référence du variateur inscrite sur l'étiquette est conforme au bordereau de livraison correspondant au bon de commande.
- Ouvrir l'emballage, et vérifier que l'Altivar 31 n'a pas été endommagé pendant le transport.

2 - Vérifier que la tension réseau est compatible avec la plage d'alimentation du variateur (voir l'étiquette signalétique du variateur)

- Risque de destruction du variateur si non respect de la tension réseau

3 - Fixer le variateur

4 - Raccorder au variateur :

- le réseau d'alimentation, en s'assurant qu'il est :
  - **dans la plage de tension du variateur**
  - **hors tension**
- le moteur en s'assurant que son couplage correspond à la tension du réseau
- la commande par les entrées logiques
- la consigne de vitesse par les entrées logiques ou analogiques

5 - Mettre sous tension sans donner d'ordre de marche

6 - Configurer :

La fréquence nominale (bFr) du moteur, si elle est différente de 50 Hz.

7 - Configurer dans le menu drC- :

Les paramètres moteurs, seulement si la configuration usine du variateur ne convient pas.

8 - Configurer dans le menu I-O- :

Seulement si la configuration usine du variateur ne convient pas, le mode de contrôle : 3 fils, ou 2 fils sur transition, ou 2 fils sur niveau, ou 2 fils sur niveau avec priorité sens avant, ou commande locale pour ATV31●●●A.

Il faut s'assurer que les fonctions programmées sont compatibles avec le schéma de câblage utilisé.

9 - Régler dans le menu SEt- :

- les paramètres ACC (Accélération) et dEC (Décélération),
- les paramètres LSP (Petite vitesse quand la consigne est nulle) et HSP (Grande vitesse quand la consigne est maximale),
- le paramètre ItH (Protection thermique moteur),

10 - Démarrer

Conseils pratiques

- **Un retour aux réglages usine** est toujours possible par le paramètre FCS (mettre FCS = InI), dans les menus drC- (page 12) ou I-O- (page 13).
- L'autoréglage, à effectuer par le paramètre tUn du menu drC- (page 11), permet d'obtenir des performances optimales en précision et en temps de réponse.

Configuration usine

L'Altivar 31 est préréglé en usine pour les conditions d'emploi les plus courantes :
- Affichage : variateur prêt (rdY) moteur à l'arrêt, et fréquence moteur en marche.
- Fréquence moteur (bFr) : 50 Hz.
- Application à couple constant, contrôle vectoriel de flux sans capteur (UFt = n).
- Mode d'arrêt normal sur rampe de décélération.
- Mode d'arrêt sur défaut : roue libre
- Rampes linéaires (ACC, dEC) : 3 secondes.
- Petite vitesse (LSP) : 0 Hz.
- Grande vitesse (HSP) : 50 Hz.
- Courant thermique moteur (ItH) = courant nominal moteur (valeur selon calibre du variateur).
- Courant de freinage par injection à l'arrêt (SdC1) = 0,7 x courant nominal variateur, pendant 0,5 seconde.
- Adaptation automatique de la rampe de décélération en cas de surtension au freinage.
- Pas de redémarrage automatique après un défaut.
- Fréquence de découpage 4 kHz.
- Entrées logiques :
  - LI1, LI2 (2 sens de marche) : commande 2 fils sur transition,
    LI1 = marche avant, LI2 = marche arrière, inactives sur les ATV 31●●●●●●A (non affectées).
  - LI3, LI4 : 4 vitesses présélectionnées
    (vitesse 1 = consigne vitesse ou LSP, vitesse 2 = 10 Hz, vitesse 3 = 15 Hz, vitesse 4 = 20 Hz).
  - LI5 - LI6 : inactives (non affectées).
- Entrées analogiques :
  - AI1 : consigne vitesse 0-10 V, inactive sur les ATV 31●●●●●●A (non affectée).
  - AI2 : consigne sommatrice vitesse 0±10 V.
  - AI3 : 4-20 mA inactive (non affectée).
- Relais R1 : le contact s'ouvre en cas de défaut (ou variateur hors tension)
- Relais R2 : inactif (non affecté).
- Sortie analogique AOC : 0-20 mA, inactive (non affectée).

Gamme ATV 31●●●●●●A

Les ATV 31●●●●●●A sortis d'usine sont livrés avec la commande locale activée : les boutons RUN, STOP et le potentiomètre du variateur sont actifs. Les entrées logiques LI1 et LI2 ainsi que l'entrée analogique AI1 sont inactives (non affectées).

Si les valeurs ci-dessus sont compatibles avec l'application, le variateur peut être utilisé sans modification des réglages.

Remplacement d'un ATV 28 par un ATV 31

Le tableau ci-dessous indique la correspondance des bornes contrôle entre les deux modèles de variateurs.

Bornes de contrôle ATV 28	Fonction en réglage usine	Bornes de contrôle ATV 31	Fonction en réglage usine
R1A - R1B - R1C	Relais de défaut	R1A - R1B - R1C	Relais de défaut
R2A - R2C	Consigne vitesse atteinte	R2A - R2C	Non affectée
COM	0 V	COM	0 V
AI1 (0 - 10 V)	Consigne vitesse	AI1 (0 - 10 V)	Consigne vitesse
+ 10 V	+ 10 V	10 V	+ 10 V
AI2 (0 - 10 V)	Consigne sommatrice vitesse	AI2 (0 - ± 10 V)	Consigne sommatrice vitesse
AIC (X - Y mA)	Non affectée	AI3 (X - Y mA)	Non affectée
AO	Fréquence moteur	AOC / AOV	Non affectée
LI1 - LI2	Marche avant / arrière	LI1 - LI2	Marche avant / arrière
LI3 - LI4	Vitesses présélectionnées	LI3 - LI4	Vitesses présélectionnées
+ 24 V	+ 24 V	24 V	+ 24 V

Compatibilité électromagnétique

Principe

- Équipotentialité "haute fréquence" des masses entre le variateur, le moteur et les blindages des câbles.
- Utilisation de câbles blindés avec blindages reliés à la masse sur 360° aux deux extrémités pour les câbles moteur **6**, résistance de freinage éventuelle **8**, et contrôle-commande **7**. Ce blindage peut être réalisé sur une partie du parcours par tubes ou goulottes métalliques à condition qu'il n'y ait pas de discontinuité. En cas de borniers intermédiaires, ceux-ci doivent être en boîtier métallique blindé CEM.
- Séparer le plus possible le câble d'alimentation (réseau) du câble moteur.

Plan d'installation (exemple)

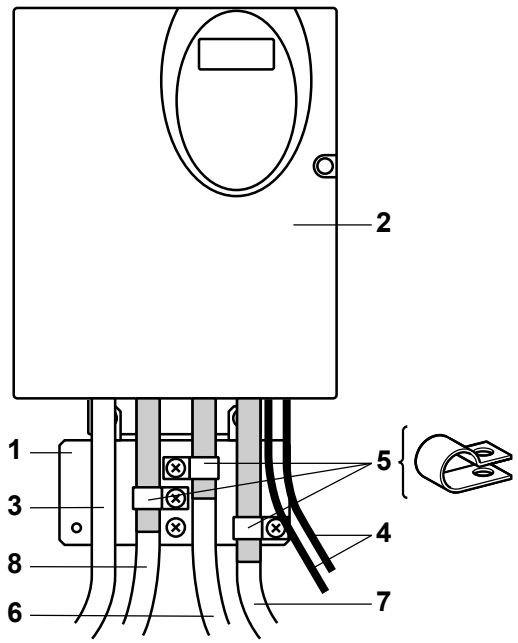

1 Plan de masse en tôle fourni avec le variateur, à monter sur celui-ci, comme indiqué sur le dessin.

2 Altivar 31

3 Fils ou câble d'alimentation non blindés.

4 Fils non blindés pour la sortie des contacts des relais.

5 Fixation et mise à la masse des blindages des câbles 6, 7 et 8 au plus près du variateur :
- mettre les blindages à nu,
- utiliser des colliers métalliques inoxydables de dimensions appropriées, sur les parties dénudées des blindages, pour la fixation sur la tôle 1.
Les blindages doivent être suffisamment serrés sur la tôle pour que les contacts soient corrects.

6 Câble blindé pour raccordement du moteur. Pour les variateurs de 0,18 à 1,5 kW, si la fréquence de découpage est supérieure à 12 kHz, utiliser des câbles à faible capacité linéique : 130 pF (picoFarad) maxi par mètre.

7 Câble blindé pour raccordement du contrôle/commande. Pour les utilisations nécessitant de nombreux conducteurs, utiliser des faibles sections (0,5 mm^2).

8 Câble blindé pour raccordement de la résistance de freinage éventuelle.

Nota :
- En cas d'utilisation d'un filtre d'entrée additionnel, celui ci est monté sous le variateur, et directement raccordé au réseau par câble non blindé. La liaison 3 sur le variateur est alors réalisée par le câble de sortie du filtre.
- Le raccordement équipotentiel HF des masses entre variateur, moteur, et blindages des câbles ne dispense pas de raccorder les conducteurs de protection PE (vert-jaune) aux bornes prévues à cet effet sur chacun des appareils.

Fonctions de l'afficheur et des touches

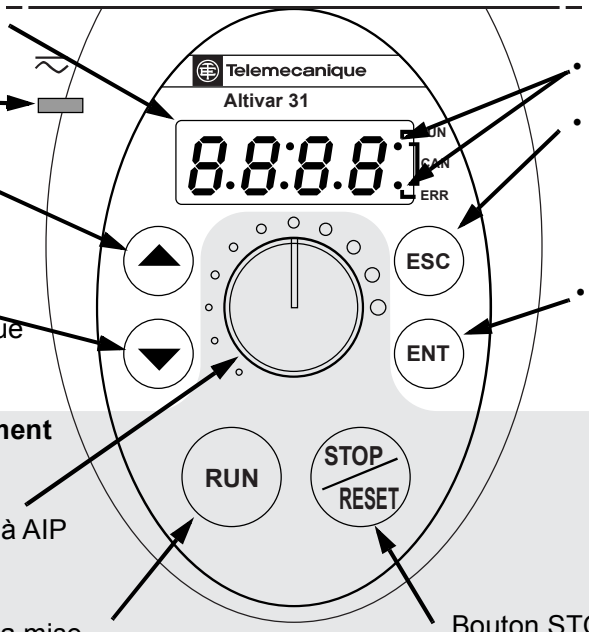

- 4 afficheurs "7 segments"
- Voyant rouge "bus DC sous tension"
- Passe au menu ou au paramètre précédent, ou augmente la valeur affichée
- Passe au menu ou au paramètre suivant, ou diminue la valeur affichée
- 2 voyants d'état CANopen
- Sort d'un menu ou d'un paramètre, ou abandonne la valeur affichée pour revenir à la valeur précédente en mémoire
- Entre dans un menu ou dans un paramètre, ou enregistre le paramètre ou la valeur affichée

Pour ATV 31●●●●●●A seulement

- Potentiomètre de consigne, actif si le paramètre Fr1 du menu CtL reste configuré à AIP
- Bouton RUN : il commande la mise sous tension du moteur dans le sens avant, si le paramètre tCC du menu I-O reste configuré à LOC

Bouton STOP/RESET

- il permet la remise à zéro des défauts
- il peut toujours commander l'arrêt du moteur.
  - Si tCC (menu I-O) n'est pas configuré en LOC, l'arrêt se fait en roue libre.
  - Si tCC (menu I-O) reste configuré en LOC, l'arrêt se fait sur rampe, mais si le freinage par injection est en cours, il se fait alors en roue libre.

• L'action sur ▲ ou ▼ ne mémorise pas le choix.

• L'appui prolongé (>2 s) de ▲ ou ▼ entraîne un défilement rapide.

Mémorisation, enregistrement du choix affiché : ENT

La mémorisation s'accompagne d'un clignotement de l'affichage

Affichage normal hors défaut et hors mise en service :

- 43.0 : Affichage du paramètre sélectionné dans le menu SUP (par défaut : fréquence moteur). En cas de limitation de courant, l'affichage est clignotant.
- init : Séquence d'initialisation
- rdY : Variateur prêt.
- dcb : Freinage par injection de courant continu en cours.
- nSt : Arrêt en roue libre.
- FSt : Arrêt rapide
- tUn : Autoréglage en cours.

En cas de défaut, celui ci est affiché en clignotant.

Option terminal déporté
Consulter le cédérom.

Accès aux menus

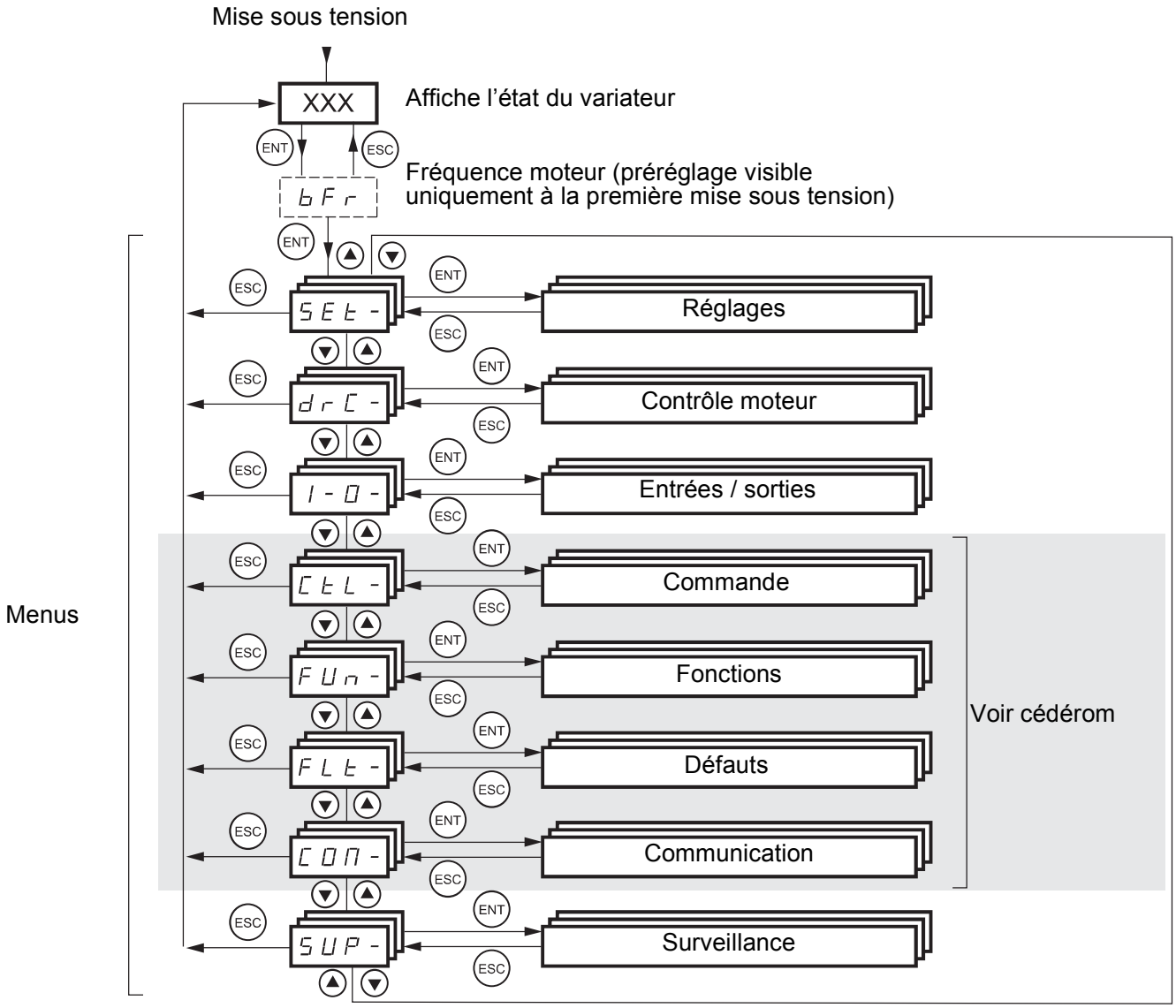

Les codes des menus sont différenciés des codes de paramètres par un tiret à droite. Exemple : menu SEt-, paramètre ACC.

Mémorisation, enregistrement du choix affiché : (ENT)

Exemple :

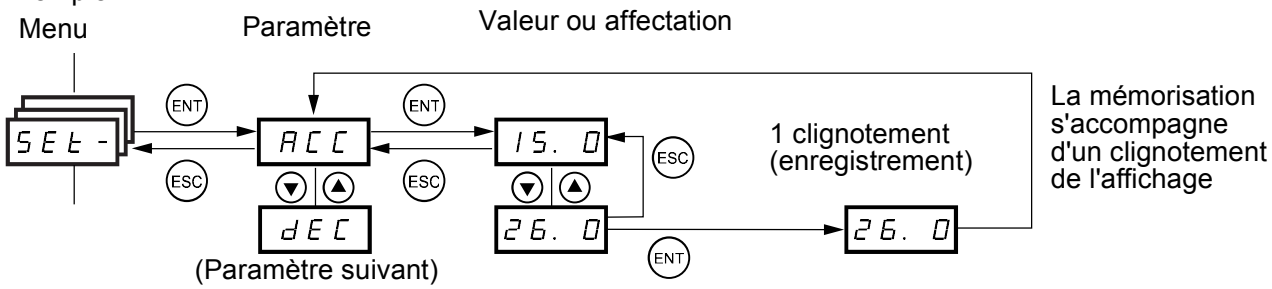

Configuration du paramètre bFr

Ce paramètre n'est modifiable qu'à l'arrêt, variateur verrouillé.

Code	Description	Plage de réglage	Réglage usine
bFr	**Fréquence standard moteur**		50
	Ce paramètre n'est visible ici qu'à la première mise sous tension. Il reste toujours modifiable dans le menu drC-. 50 Hz : IEC 60 Hz : NEMA Ce paramètre modifie les préréglages des paramètres : HSP page 8, Ftd page 10, FrS page 10 et tFr page 11.		

Menu réglages SEt-

Les paramètres de réglage sont modifiables en marche et à l'arrêt.

⚠ S'assurer que les changements en cours de fonctionnement sont sans danger ; les effectuer de préférence à l'arrêt.

Code	Description	Plage de réglage	Réglage usine
ACC dEC	**Temps des rampes d'accélération et de décélération**	0,1 à 999,9 s 0,1 à 999,9 s	3 s 3 s
	Définis pour accélérer et décélérer entre 0 et la fréquence nominale FrS (paramètre du menu drC-). S'assurer que la valeur de dEC n'est pas trop faible par rapport à la charge à arrêter.		
LSP	**Petite vitesse**	0 à HSP	0 Hz
	(Fréquence moteur à consigne mini).		
HSP	**Grande vitesse**	LSP à tFr	bFr
	(fréquence moteur à consigne maxi) : s'assurer que ce réglage convient au moteur et à l'application.		
ItH	**Protection thermique du moteur - courant thermique maxi**	0 à 1,5 In (1)	Selon calibre variateur
	Régler ItH à l'intensité nominale lue sur la plaque signalétique moteur. Pour supprimer la protection thermique, voir le cédérom.		
UFr	**Compensation RI / Boost de tension**	0 à 100 %	20 %
	Permet d'optimiser le couple à très basse vitesse (augmenter UFr s'il y a manque de couple). S'assurer que la valeur de UFr n'est pas trop élevée moteur à chaud (risque d'instabilité). ⚠ Si on modifie UFt (page 11) UFr repasse à son réglage usine (20 %).		

(1) In correspond au courant nominal variateur indiqué dans le catalogue et sur l'étiquette signalétique du variateur.

Code	Description	Plage de réglage	Réglage usine
FLG	**Gain de la boucle fréquence**	1 à 100 %	20
	Paramètre accessible seulement si UFt (page 11) = n ou nLd. Le paramètre FLG ajuste le suivi de la rampe de vitesse en fonction de l'inertie de la machine entraînée. Valeur trop faible : allongement du temps de réponse. Valeur trop forte : dépassement de vitesse, instabilité.		
StA	**Stabilité de la boucle fréquence**	1 à 100 %	20
	Paramètre accessible seulement si UFt (page 11) = n ou nLd. Valeur trop faible : dépassement de vitesse, instabilité. Valeur trop forte : allongement du temps de réponse.		
SLP	**Compensation de glissement**	0 à 150%	100
	Paramètre accessible seulement si UFt (page 11) = n ou nLd. Permet d'ajuster la compensation de glissement autour de la valeur fixée par la vitesse nominale moteur. Sur les plaques moteurs, les indications de vitesse ne sont pas forcément exactes. • Si le glissement réglé est < glissement réel : le moteur ne tourne pas à la bonne vitesse en régime établi. • Si le glissement réglé est > glissement réel : le moteur est surcompensé et la vitesse est instable.		
tdC1	**Temps d'injection de courant continu automatique à l'arrêt.**	0,1 à 30 s	0,5 s
SdC1	**Intensité du courant d'injection automatique à l'arrêt**	0 à 1,2 In (1)	0,7 In (1)
	⚠ S'assurer que le moteur supporte ce courant sans surchauffe.		
tdC2	**2ème temps d'injection de courant continu automatique à l'arrêt**. Voir cédérom.	0 à 30 s	0 s
SdC2	**2ème intensité du courant d'injection automatique à l'arrêt** . Voir cédérom.	0 à 1,2 In (1)	0,5 In (1)
JPF	**Fréquence occultée**	0 à 500	0 Hz
	Interdit un fonctionnement prolongé sur une plage de fréquence de ± 1 Hz autour de JPF. Cette fonction permet de supprimer une vitesse critique qui entraîne une résonance. Le réglage à 0 rend la fonction inactive.		
JF2	**2ème fréquence occultée**	0 à 500	0 Hz
	Interdit un fonctionnement prolongé sur une plage de fréquence de ± 1 Hz autour de JF2. Cette fonction permet de supprimer une vitesse critique qui entraîne une résonance. Le réglage à 0 rend la fonction inactive.		
SP2	**2ème vitesse présélectionnée.**	0,0 à 500,0 Hz	10 Hz
SP3	**3ème vitesse présélectionnée.**	0,0 à 500,0 Hz	15 Hz
SP4	**4ème vitesse présélectionnée.**	0,0 à 500,0 Hz	20 Hz
CL1	**Limitation de courant**	0,25 à 1,5 In (1)	1,5 In (1)
	Permet de limiter le couple et l'échauffement du moteur.		

(1) In correspond au courant nominal variateur indiqué dans le catalogue et sur l'étiquette signalétique du variateur.

Code	Description	Plage de réglage	Réglage usine
tLS	**Temps de fonctionnement en petite vitesse**	0 à 999,9 s	0 (pas de limitation de temps)
	Suite à un fonctionnement en LSP pendant le temps défini, l'arrêt du moteur est demandé automatiquement. Le moteur redémarre si la référence fréquence est supérieure à LSP et si un ordre de marche est toujours présent. Attention, la valeur 0 correspond à un temps non limité.		
Ftd	Non utilisé, voir cédérom		
ttd	Non utilisé, voir cédérom		
Ctd	Non utilisé, voir cédérom		
SdS	Non utilisé, voir cédérom		
SFr	**Fréquence de découpage**	2,0 à 16 kHz	4 kHz
	Ce paramètre est également accessible dans le menu drC-.		

Menu contrôle moteur drC-

Les paramètres ne sont modifiables qu'à l'arrêt, sans ordre de marche, sauf tUn, qui peut provoquer la mise sous tension du moteur.
L'optimisation des performances d'entraînement est obtenue :
- **en entrant les valeurs lues sur la plaque signalétique du moteur dans le menu entraînement,**
- **en déclenchant un auto-réglage (sur un moteur asynchrone standard).**

Code	Description	Plage de réglage	Réglage usine
bFr	**Fréquence standard moteur**		50
	50 Hz : IEC 60 Hz : NEMA Ce paramètre modifie les préréglages des paramètres : HSP page 8, Ftd page 10, FrS page 10 et tFr page 11.		
UnS	**Tension nominale moteur lue sur sa plaque signalétique**	Selon calibre variateur	Selon calibre variateur
FrS	**Fréquence nominale moteur lue sur sa plaque signalétique**	10 à 500 Hz	50 Hz
	Le réglage usine est 50 Hz, remplacé par un préréglage de 60 Hz si bFr est mis à 60 Hz.		
nCr	**Courant nominal moteur lu sur sa plaque signalétique**	0,25 à 1,5 In (1)	Selon calibre variateur
nSP	**Vitesse nominale moteur lue sur sa plaque signalétique**	0 à 32760 RPM	Selon calibre variateur
	0 à 9999 RPM puis 10.00 à 32.76 KRPM Si la plaque signalétique n'indique pas la vitesse nominale, consulter le cédérom.		
COS	**Cosinus Phi moteur lu sur sa plaque signalétique**	0,5 à 1	Selon calibre variateur
rSC	Laisser à nO ou voir cédérom.		nO

(1) In correspond au courant nominal variateur indiqué dans le catalogue et sur l'étiquette signalétique du variateur.

Code	Description	Plage de réglage	Réglage usine
tUn	**Autoréglage de la commande du moteur**		nO
	Il est impératif que tous les paramètres moteurs (UnS, FrS, nCr, nSP, COS) soient correctement configurés avant d'effectuer l'autoréglage. nO : Autoréglage non fait. YES : L'autoréglage est fait dès que possible, puis le paramètre passe automatiquement à dOnE ou nO en cas de défaut (affichage du défaut tnF). dOnE : Utilisation des valeurs données par le précédent autoréglage. rUn : L'autoréglage est fait à chaque ordre de marche. POn : L'autoréglage est fait à chaque mise sous tension. LI1 à LI6 : L'autoréglage est fait lors de la transition 0 ➡ 1 d'une entrée logique affectée à cette fonction. **Attention** : L'autoréglage s'effectue seulement si aucune commande n'est actionnée. L'autoréglage peut durer 1 à 2 secondes. Ne pas l'interrompre et attendre que l'affichage passe à "dOnE" ou à "nO". ⚠ Pendant l'autoréglage le moteur est parcouru par son courant nominal.		
tUS	**Etat de l'autoréglage** (information, non paramétrable)		tAb
	tAb : La valeur par défaut de résistance du stator est utilisée pour commander le moteur. PEnd : L'autoréglage a été demandé mais n'est pas encore effectué. PrOG : Autoréglage en cours. FAIL : L'autoréglage a échoué. dOnE : La résistance stator mesurée par la fonction autoréglage est utilisée pour commander le moteur.		
UFt	**Choix du type de loi tension / fréquence**		n
	L : Couple constant pour moteurs en parallèle ou moteurs spéciaux P : Couple variable : applications pompes et ventilateurs n : Contrôle vectoriel de flux sans capteur pour applications à couple constant nLd : Economie d'énergie, pour applications à couple variable sans besoin de dynamique importante (comportement voisin de la loi P à vide et de la loi n en charge).		
nrd	**Fréquence de découpage aléatoire**		YES
	YES : Fréquence avec modulation aléatoire nO : Fréquence fixe La modulation de fréquence aléatoire évite les bruits de résonance éventuels qui pourraient survenir à une fréquence fixe.		
SFr	**Fréquence de découpage** (1)	2,0 à 16 kHz	4 kHz
	La fréquence est réglable pour réduire le bruit généré par le moteur. Si la fréquence est réglée à plus de 4 kHz, en cas d'échauffement excessif le variateur diminue automatiquement la fréquence de découpage, et la rétablit lorsque sa température est redevenue normale.		
tFr	**Fréquence maximale de sortie**	10 à 500 Hz	60 Hz
	Le réglage usine est 60 Hz, remplacé par un préréglage à 72 Hz si bFr est mis à 60 Hz		
SSL	**Suppression du filtre de la boucle de vitesse**		nO
	nO : Le filtre de la boucle de vitesse reste actif (évite les dépassements de consigne). YES : Le filtre de la boucle de vitesse est supprimé (pour applications avec positionnement, entraîne un temps de réponse réduit, avec dépassement de consigne possible).		

(1) Paramètre également accessible dans le menu réglage SEt-..

Code	Description	Plage de réglage	Réglage usine
SCS	**Sauvegarde de la configuration** (1)		nO
	nO : Fonction inactive Str I : Effectue une sauvegarde de la configuration en cours (sauf le résultat de l'autoréglage) en mémoire EEPROM. SCS repasse automatiquement à nO dès que la sauvegarde est effectuée. Cette fonction permet de conserver une configuration en réserve en plus de la configuration en cours. Dans les variateurs sortis d'usine la configuration en cours et la configuration en sauvegarde sont initialisées à la configuration usine.		
FCS	**Retour au réglage usine / Rappel de configuration** (1)		nO
	nO : Fonction inactive rECI : La configuration en cours devient identique à la configuration sauvegardée précédemment par SCS = StrI. rECI n'est visible que si une sauvegarde a été faite. FCS repasse automatiquement à nO dès que cette action est effectuée. InI : La configuration en cours devient identique au réglage usine. FCS repasse automatiquement à nO dès que cette action est effectuée. ⚠ Pour être pris en compte, rECI et InI nécessitent un appui prolongé (2 s) de la touche ENT.		

(1) SCS et FCS sont accessibles depuis plusieurs menus de configuration, mais ils concernent l'ensemble de tous les menus et paramètres.

Menu Entrées /sorties I-O-

Les paramètres ne sont modifiables qu'à l'arrêt, sans ordre de marche.

Code	Description	Réglage usine
tCC	**Commande 2 fils / 3 fils (Type de contrôle)**	2C ATV31●●●A : LOC
	Configuration de la commande : 2C = commande 2 fils 3C = commande 3 fils LOC = commande locale (RUN / STOP / RESET du variateur) pour ATV31●●●A seulement . Commande 2 fils : C'est l'état ouvert ou fermé de l'entrée qui commande la marche ou l'arrêt. Commande 3 fils (Commande par impulsions) : une impulsion "avant" ou arrière" suffit pour commander le démarrage, une impulsion "stop" suffit pour commander l'arrêt. Voir le cédérom. Sur ATV31●●●A, la reconfiguration de tCC = 2C réaffecte les entrées LI1 (marche avant) et LI2 (marche arrière). Le bouton RUN du variateur devient alors inactif, mais la référence vitesse reste donnée par le potentiomètre. Il est possible de désactiver le potentiomètre et d'affecter la consigne vitesse à l'entrée analogique AI1, en configurant le paramètre Fr1 = AI1 dans le menu CtL-. Voir le cédérom. ⚠ Le changement d'affectation de tCC nécessite un appui prolongé (2 s) de la touche "ENT", il entraîne un retour au réglage usine des fonctions : rrS, tCt et de toutes les fonctions affectant des entrées logiques.	

Code	Description	Réglage usine
tCt	**Type de commande 2 fils** (paramètre accessible seulement si tCC = 2C)	trn
	LEL : L'état 0 ou 1 est pris en compte pour la marche ou l'arrêt. trn : Un changement d'état (transition ou front) est nécessaire pour enclencher la marche afin d'éviter un redémarrage intempestif après une interruption de l'alimentation. PFO : L'état 0 ou 1 est pris en compte pour la marche ou l'arrêt, mais l'entrée de sens "avant" est toujours prioritaire sur l'entrée de sens "arrière".	
rrS	**Marche arrière par entrée logique**	si tCC = 2C : LI2 si tCC = 3C : LI3 si tCC = LOC : nO
	Si rrS = nO la marche arrière reste active, par tension négative sur AI2 par exemple. nO : Non affectée LI2 : Entrée logique LI2, accessible si tCC = 2C LI3 : Entrée logique LI3, LI4 : Entrée logique LI4 LI5 : Entrée logique LI5 LI6 : Entrée logique LI6.	
CrL3 CrH3 AOIt dO r1 r2	Consulter le cédérom	
SCS FCS	Identique à menu drC, page 12	

Menu Surveillance SUP-

Les paramètres sont accessibles en marche et à l'arrêt.

Certaines fonctions comportent de nombreux paramètres. Pour clarifier la programmation et pour éviter un défilement fastidieux de paramètres, ces fonctions ont été groupées dans des sous-menus.
Les sous-menus sont reconnaissables au tiret placé à droite de leur code, comme pour les menus : LIF- par exemple.

Lorsque le variateur est en marche, la valeur affichée correspond à la valeur de l'un des paramètres de surveillance. Par défaut, la valeur affichée est la fréquence de sortie appliquée au moteur (paramètre rFr).

Durant l'affichage de la valeur du nouveau paramètre de surveillance désiré, il faut un second appui prolongé (2 secondes) sur la touche "ENT" pour valider le changement de paramètre de surveillance et mémoriser celui-ci. Dès lors c'est la valeur de ce paramètre qui sera affichée en marche (même après une mise hors tension). Si le nouveau choix n'est pas confirmé par ce second appui prolongé sur "ENT", il reviendra au paramètre précédent après mise hors tension.

Code	Description	Plage de variation
LFr	**Consigne fréquence pour la commande par le terminal intégré ou par le terminal déporté**	0 à 500 Hz
rPI	**Consigne interne PI**	0 à 100%

Ces paramètres n'apparaissent que si la fonction a été validée.

Code	Description	Plage de variation
FrH	**Consigne de fréquence avant rampe** (en valeur absolue)	0 à 500 Hz
rFr	**Fréquence de sortie appliquée au moteur**	- 500 Hz à + 500 Hz
SPd	**Fréquence de sortie en unité client**	
	Voir cédérom.	
LCr	**Courant dans le moteur**	
OPr	**Puissance moteur**	
	100 % = Puissance nominale du moteur	
ULn	**Tension réseau** (donne la tension réseau via le bus DC, en régime moteur ou à l'arrêt)	
tHr	**Etat thermique moteur**	
	100 % = Etat thermique nominal 118 % = Seuil "OLF" (surcharge moteur)	
tHd	**Etat thermique variateur**	
	100 % = Etat thermique nominal 118 % = Seuil "OHF" (surcharge moteur)	
LFt	**Dernier défaut apparu**	
	Voir Défauts - causes - remèdes, page 15	
Otr	**Couple moteur**	
	100 % = couple nominal du moteur	
rtH	**Temps de fonctionnement**	0 à 65530 heures
	Temps cumulé de mise sous tension du moteur : de 0 à 9999 (heures), puis 10.00 à 65.53 (kiloheures). Peut être remis à zéro par le paramètre rPr du menu FLt- (voir cédérom).	
COd	**Code de verrouillage du terminal**	
	Voir cédérom	
tUS	**Etat de l'autoréglage**	
	tAb : La valeur par défaut de résistance du stator est utilisée pour commander le moteur. PEnd : L'autoréglage a été demandé mais n'est pas encore effectué. PrOG : Autoréglage en cours. FAIL : L'autoréglage a échoué. dOnE : La gestion de l'entraînement utilise la résistance stator mesurée par la fonction autoréglage	
UdP	**Affichage de la version logiciel de l'ATV31**	
	Ex : 1102 = V1.1 IE02.	
L IA-	**Fonctions des entrées logiques**	
	Voir cédérom.	
A IA-	**Fonctions des entrées analogiques**	
	Voir cédérom.	

Défauts - causes - remèdes

Assistance à la maintenance, affichage de défaut

En cas d'anomalie à la mise en service ou en exploitation, s'assurer tout d'abord que les recommandations relatives à l'environnement, au montage et aux raccordements ont été respectées.

Le premier défaut détecté est mémorisé et affiché en clignotant sur l'écran : le variateur se verrouille, et le contact du relais de défaut (R1A - R1C ou R2A - R2C) s'ouvre.

Non démarrage sans affichage de défaut

- S'il n'y a aucun affichage, vérifier que le variateur est bien alimenté.
- Autres cas : consulter le cédérom.

Défauts à réarmer

La cause du défaut doit être supprimée avant réarmement par mise hors tension jusqu'à extinction de l'affichage puis remise sous tension du variateur.

Défaut	Cause probable	Procédure remède
CAn défaut CANopen	• interruption de communication sur bus CANopen	• Vérifier le bus de communication. • Consulter la documentation spécifique.
CrF circuit de charge condensateurs	• défaut de commande du relais de charge ou résistance de charge détériorée	• Remplacer le variateur.
EEF défaut EEPROM	• défaut mémoire interne	• Vérifier l'environnement (compatibilité électromagnétique). • Remplacer le variateur.
InF défaut interne	• défaut interne	• Vérifier l'environnement (compatibilité électromagnétique). • Remplacer le variateur.
LFF perte 4-20 mA	• perte de la consigne 4-20 mA sur l'entrée AI3	• Vérifier le raccordement sur l'entrée AI3.
ObF surtension en décélération	• freinage trop brutal • charge entraînante	• Augmenter le temps de décélération. • Adjoindre une résistance de freinage si nécessaire. • Voir la fonction brA (voir cédérom).
OCF surintensité	• Paramètres des menus SEt- et drC- non corrects • inertie ou charge trop forte • blocage mécanique	• Vérifier les paramètres de SEt- et drC-. • Vérifier le dimensionnement moteur/ variateur/charge. • Vérifier l'état de la mécanique.
OHF surcharge variateur	• température variateur trop élevée	• Contrôler la charge moteur, la ventilation variateur et l'environnement. Attendre le refroidissement pour redémarrer.
OLF surcharge moteur	• déclenchement par courant moteur trop élevé	• Vérifier le réglage ItH (page 8) de la protection thermique moteur, contrôler la charge du moteur. Attendre le refroidissement pour redémarrer.

Défaut	Cause probable	Procédure remède
OPF coupure phase moteur	• coupure d'une phase en sortie du variateur • contacteur aval ouvert • moteur non câblé ou de trop faible puissance • instabilités instantanées du courant moteur	• Vérifier les raccordements du variateur au moteur • Dans le cas de l'utilisation d'un contacteur aval, paramétrer OPL à OAC (voir cédérom, menu FLt-). • Essai sur moteur de faible puissance ou sans moteur : paramétrer OPL à nO (voir cédérom, menu FLt-). • Vérifier et optimiser les paramètres UFr (page 8), UnS et nCr (page 10), et faire un autoréglage par tUn (page 11).
OSF surtension	• tension réseau trop élevée • réseau perturbé	• Vérifier la tension réseau.
PHF coupure phase réseau	• coupure d'une phase • utilisation sur réseau monophasé d'un ATV31 triphasé • charge avec balourd Cette protection agit seulement en charge.	• Vérifier le raccordement et les fusibles. • Utiliser un réseau triphasé. • Inhiber le défaut par IPL = nO (voir cédérom)
SCF court-circuit moteur	• court-circuit ou mise à la terre en sortie du variateur • courant de fuite important à la terre en sortie du variateur dans le cas de plusieurs moteurs en parallèle.	• Vérifier les câbles de liaison du variateur au moteur, et l'isolement du moteur. • Réduire la fréquence de découpage. • Ajouter des inductances en série avec le moteur.
SLF défaut Modbus	• interruption de communication sur bus Modbus	• Vérifier le bus de communication. • Consulter la documentation spécifique.
SOF survitesse	• instabilité • charge entraînante trop forte	• Vérifier les paramètres moteur, gain et stabilité. • Ajouter une résistance de freinage. • Vérifier le dimensionnement moteur / variateur / charge.
tnF erreur autoréglage	• moteur spécial ou moteur de puissance non adaptée au variateur • moteur non raccordé au variateur	• Utiliser la loi L ou la loi P (UFt page 11). • Vérifier la présence du moteur lors de l'autoréglage. • Dans le cas de l'utilisation d'un contacteur aval, le fermer pendant l'autoréglage.

Défauts réarmés spontanément à la disparition de la cause

Défaut	Cause probable	Procédure remède
CFF défaut configuration	• la configuration en cours est incohérente.	• Faire un retour en réglage usine ou un rappel de la configuration en sauvegarde si elle est valide. Voir paramètre FCS du menu drC- page 12.
CFI défaut configuration par liaison série	• configuration invalide (la configuration chargée dans le variateur par liaison série est incohérente)	• Vérifier la configuration précédemment chargée. • Charger une configuration cohérente.
USF sous-tension	• réseau trop faible • baisse de tension passagère • résistance de charge détériorée	• Vérifier la tension et le paramètre tension. • Remplacer le variateur.

Contents

Preliminary recommendations 18
Steps for setting up the drive 19
Factory configuration 20
Replacing an ATV 28 with an ATV 31 20
Electromagnetic compatibility 21
Functions of the display and the keys 22
Access to menus 23
Configuration of the bFr parameter 24
Settings menu SEt- 24
Motor control menu drC- 26
I/O menu I-O- 28
Display menu SUP- 29
Faults - Causes - Remedies 31

The motor can be stopped during operation by inhibiting start commands or the speed reference while the drive remains powered up. If personnel safety requires prevention of sudden restarts, this electronic locking system is not sufficient: *fit a cut-off on the power circuit.*

The drive is fitted with safety devices which, in the event of a fault, can shut down the drive and consequently the motor. The motor itself may be stopped by a mechanical blockage. Finally, voltage variations, especially line supply failures, can also cause shutdowns.
If the cause of the shutdown disappears, there is a risk of restarting which may endanger certain machines or installations, especially those which must conform to safety regulations.

In this case the user must take precautions against the possibility of restarts, in particular by using a low speed detector to cut off power to the drive if the motor performs an unprogrammed shutdown.

The drive must be installed and set up in accordance with both international and national standards. Bringing the device into conformity is the responsibility of the systems integrator who must observe the EMC directive among others within the European Union.
The specifications contained in this document must be applied in order to comply with the essential requirements of the EMC directive.

The Altivar 31 must be considered as a component: it is neither a machine nor a device ready for use in accordance with European directives (machinery directive and electromagnetic compatibility directive). It is the responsibility of the end user to ensure that the machine meets these standards.

The drive must not be used as a safety device for machines posing a potential risk of material damage or personal injury (lifting equipment, for example). In such applications, overspeed checks and checks to ensure that the trajectory remains under constant control must be made by separate devices which are independent of the drive.

The products and equipment described in this document may be changed or modified at any time, either from a technical point of view or in the way they are operated. Their description can in no way be considered contractual.

Preliminary recommendations

This simplified guide describes the minimum setup for the factory configuration of the drive.

All operations, parameters and faults described in this document relate to the factory configuration. Differences may become apparent if this configuration has been modified by the CtL-, FUn- or FLt- menus.
The CD-ROM supplied with the drive contains the complete description along with all the configuration menus.

Prior to switching on and configuring the drive

- **Check that the line voltage is compatible with the supply voltage range of the drive. The drive may be damaged if the line voltage is not compatible.**
- **Ensure the logic inputs are switched off (state 0) to prevent accidental starting. Otherwise, an input assigned to the run command may cause the motor to start immediately on exiting the configuration menus.**

User adjustment and extension of functions

If necessary, the display and buttons can be used to modify the settings and to extend the functions. It is very easy to **return to the factory settings** using the FCS parameter in the drC- menu.
There are three types of parameter:
- Display: Values displayed by the drive
- Adjustment: Can be changed during operation or when stopped
- Configuration: Can only be modified when stopped and no braking is taking place. Can be displayed during operation.

- **Check that changes to the current operating settings do not present any danger. Changes should preferably be made with the drive stopped.**

Start up

Important: In factory settings mode, when the drive is switched on, or in a manual fault reset, or after a stop command, the motor can only be supplied with power once the "forward" and "reverse" commands have been reset. If they have not been reset, the drive will display "nst" but will not start.

Test on a low power motor or without a motor

In factory settings mode, motor phase loss detection is active. To check the drive in a test or maintenance environment without having to switch to a motor with the same rating as the drive (particularly useful in the case of high power drives), deactivate motor phase loss detection and configure the voltage/frequency ratio UFt = L (see CD-ROM).

Operation on an IT system

IT system: Isolated or impedance earthed neutral.
Use a permanent insulation monitor compatible with non-linear loads: a Merlin Gerin type XM200, for example.
ATV 31●●●M2 and N4 drives feature built-in RFI filters. These filters can be disconnected from ground for operation on an IT system.
Please refer to the CD-ROM supplied with the drive.

Steps for setting up the drive

1 - Delivery of the drive

- Check that the drive reference printed on the label is the same as that on the delivery note corresponding to the purchase order.
- Remove the Altivar 31 from its packaging and check that it has not been damaged in transit.

2 - Check that the line voltage is compatible with the supply voltage range of the drive (see the drive rating plate).

- The drive may be damaged if the line voltage is not compatible.

3 - Fit the drive

4 - Connect the following to the drive:

- The line supply, ensuring that it is:
  - **compatible with the voltage range of the drive**
  - **switched off**
- The motor, ensuring that its coupling corresponds to the line voltage
- The control via the logic inputs
- The speed reference via the logic or analog inputs

5 - Switch on the drive, but do not give a run command

6 - Configure the following:

The nominal frequency (bFr) of the motor, if it is different from 50 Hz.

7 - Configure the following in the drC- menu:

The motor parameters, only if the factory configuration of the drive is not suitable.

8 - Configure the following in the I-O- menu:

The control mode (only if the factory configuration is not suitable): 3-wire, or 2-wire transition detection, or 2-wire level detection, or 2-wire level detection with forward direction priority, or local control for ATV31●●●A.

The user must ensure that the programmed functions are compatible with the wiring diagram used.

9 - Set the following in the SEt- menu:

- The ACC (Acceleration) and dEC (Deceleration) parameters
- The LSP (Low speed when the reference is zero) and HSP (High speed when the reference is maximum) parameters
- The ItH parameter (Motor thermal protection)

10 - Start the drive

Practical recommendations

- It is always possible to **return to the factory settings** using the FCS parameter (set FCS = InII) in the drC- (page 28) or I-O- (page 29) menus.
- Auto-tuning, which is performed using the tUn parameter in the drC- menu (page 27), can be applied to optimise performance in terms of accuracy and response time.

Factory configuration

The Altivar 31 is factory-set for the most common operating conditions:
- Display: Drive ready (rdY) with motor stopped, and motor frequency with motor running
- Motor frequency (bFr): 50 Hz
- Constant torque application with sensorless flux vector control (UFt = n)
- Normal stop mode on deceleration ramp
- Stop mode in the event of a fault: Freewheel
- Linear ramps (ACC, dEC): 3 seconds
- Low speed (LSP): 0 Hz
- High speed (HSP): 50 Hz
- Motor thermal current (ItH) = nominal motor current (value depending on drive rating)
- Standstill injection braking current (SdC1) = 0.7 x nominal drive current, for 0.5 seconds
- Automatic adaptation of the deceleration ramp in the event of overvoltage on braking
- No automatic restarting after a fault
- Switching frequency 4 kHz
- Logic inputs:
  - LI1, LI2 (2 directions of operation): 2-wire transition detection control
    LI1 = forward, LI2 = reverse, inactive on ATV 31●●●●●●A drives (not assigned)
  - LI3, LI4: 4 preset speeds
    (speed 1 = speed reference or LSP, speed 2 = 10 Hz, speed 3 = 15 Hz, speed 4 = 20 Hz)
  - LI5 - LI6: Inactive (not assigned)
- Analog inputs:
  - AI1: Speed reference 0-10 V, inactive on ATV 31●●●●●●A (not assigned)
  - AI2: Summed speed reference 0±10 V
  - AI3: 4-20 mA inactive (not assigned)
- Relay R1: The contact opens in the event of a fault (or drive off)
- Relay R2: Inactive (not assigned)
- Analog output AOC: 0-20 mA inactive (not assigned)

ATV 31●●●●●●A range

When they leave the factory, ATV 31●●●●●●A drives are supplied with local control activated: the RUN, STOP buttons and the drive potentiometer are active. Logic inputs LI1 and LI2 and analog input AI1 are inactive (not assigned).

If the above values are compatible with the application, the drive can be used without changing the settings.

Replacing an ATV 28 with an ATV 31

The table below shows the similarities and differences in terms of the control terminals on each of the two drives.

ATV 28 control terminals	Function in factory settings mode	ATV 31 control terminals	Function in factory settings mode
R1A - R1B - R1C	Fault relay	R1A - R1B - R1C	Fault relay
R2A - R2C	Speed reference reached	R2A - R2C	Not assigned
COM	0 V	COM	0 V
AI1 (0 - 10 V)	Speed reference	AI1 (0 - 10 V)	Speed reference
+10 V	+10 V	10 V	+10 V
AI2 (0 - ± 10 V)	Summed speed reference	AI2 (0 - ± 10 V)	Summed speed reference
AIC (X - Y mA)	Not assigned	AI3 (X - Y mA)	Not assigned
AO	Motor frequency	AOC/AOV	Not assigned
LI1 - LI2	Forward/reverse	LI1 - LI2	Forward/reverse
LI3 - LI4	Preset speeds	LI3 - LI4	Preset speeds
+24 V	+24 V	24 V	+24 V

Electromagnetic compatibility

Principle

- Grounds between the drive, motor and cable shielding must have "high frequency" equipotentiality.
- Use shielded cables with shielding connected to ground throughout 360° at both ends for the motor cable **6**, braking resistor (if used) **8**, and control-signalling cables **7**. Metal ducting or conduit can be used for part of the shielding length provided that there is no break in continuity. If intermediate terminals are used, they must be housed in EMC shielded metal cases.
- Ensure maximum separation between the power supply cable (line supply) and the motor cable.

Installation diagram (example)

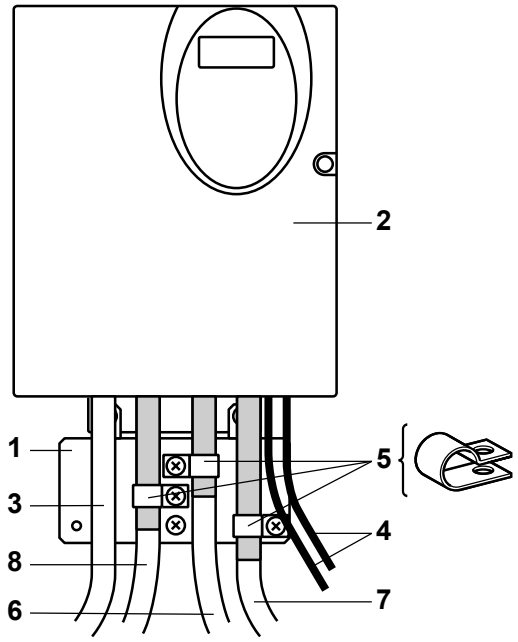

1 Sheet steel grounded plate supplied with the drive, to be fitted as indicated on the diagram.

2 Altivar 31

3 Non-shielded power supply wires or cable

4 Non-shielded wires for relay contacts

5 Fix and ground the shielding of cables 6, 7 and 8 as close as possible to the drive:
- Strip the shielding.
- Use stainless steel cable clamps of an appropriate size on the parts from which the shielding has been stripped, to attach them to the plate 1.
The shielding must be clamped tightly enough to the metal plate to ensure correct contact.

6 Shielded cable for connecting the motor. For 0.18 to 1.5 kW drives, if the switching frequency is higher than 12 kHz, use cables with low lineic capacitance: max. 130 pF (picoFarads) per metre.

7 Shielded cable for connecting the control/signalling wiring. For applications requiring several conductors, use cables with a small cross-section (0.5 mm^2).

8 Shielded cable for connecting the braking resistor (if fitted).

Note:
- If using an additional input filter, it should be mounted under the drive and connected directly to the line supply via an unshielded cable. Link 3 on the drive is then via the filter output cable.
- The HF equipotential ground connection between the drive, motor and cable shielding does not remove the need to connect the PE protective conductors (green-yellow) to the appropriate terminals on each unit.

Functions of the display and the keys

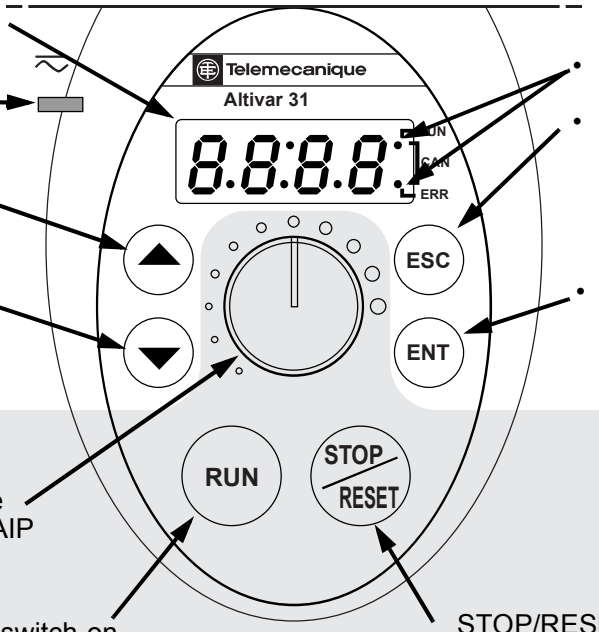

- Four 7-segment displays
- Red LED "DC bus ON"
- Returns to the previous menu or parameter, or increases the displayed value
- Goes to the next menu or parameter, or decreases the displayed value

- 2 CANopen status LEDs
- Exits a menu or parameter, or clears the displayed value to return to the previous stored value
- Enters a menu or a parameter, or saves the displayed parameter or value

For ATV 31●●●●●●A only

- Reference potentiometer, active if parameter Fr1 in the CtL- menu is configured as AIP
- RUN button: Controls motor switch-on in forward mode if parameter tCC in the I-O- menu is configured as LOC

STOP/RESET button
- Used to reset faults to zero
- It can be used to control motor stopping
  - If tCC (I-O- menu) is not configured as LOC, it is a freewheel stop.
  - If tCC (I-O- menu) is configured as LOC, stopping is on a ramp, but if injection braking is in progress, a freewheel stop takes place.

• Pressing ▲ or ▼ does not store the selection.

• Press and hold down (>2 s) ▲ or ▼ to scroll through the data quickly.

To save and store the selection: ENT

The display flashes when a value is stored.

Normal display, with no fault present and no starting:
- 43.0: Display of the parameter selected in the SUP- menu (default selection: motor frequency). In current limiting mode, the display flashes.
- init: Initialization sequence
- rdY: Drive ready
- dcb: DC injection braking in progress
- nSt: Freewheel stop
- FSt: Fast stop
- tUn: Auto-tuning in progress

The display flashes to indicate the presence of a fault.

Remote terminal option
Please refer to the CD-ROM.

Access to menus

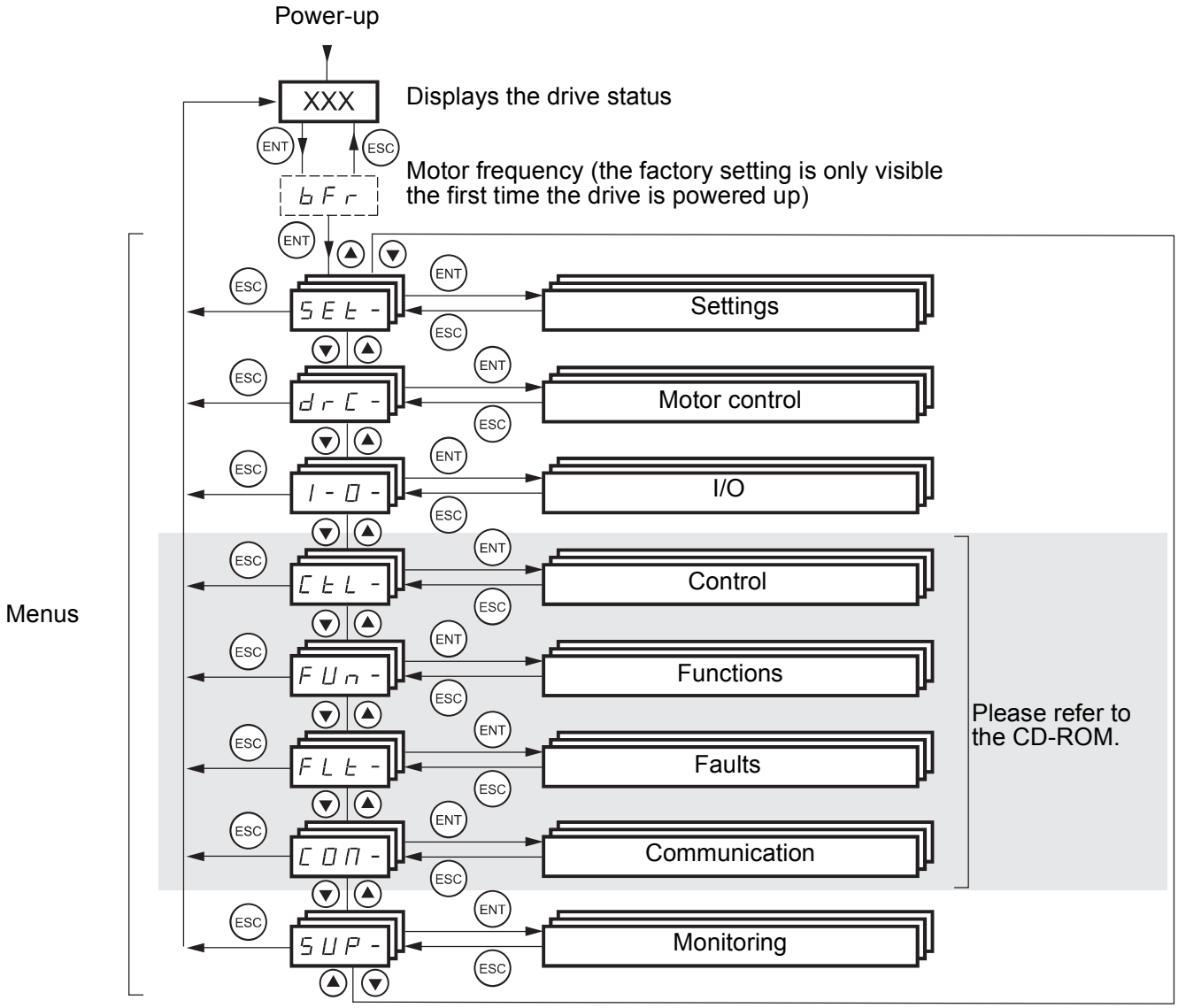

A dash appears after menu codes to differentiate them from parameter codes. Example: SEt- menu, ACC parameter.

To save and store the selection: ENT

Example:

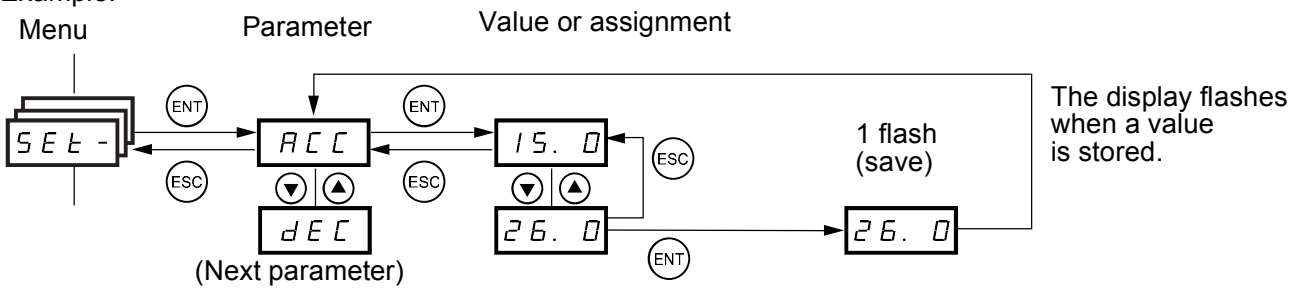

Configuration of the bFr parameter

This parameter can only be modified in stop mode with the drive locked.

Code	Description	Adjustment range	Factory setting
bFr	**Standard motor frequency**		50
	This parameter is only visible the first time the drive is switched on. It can be modified at any time in the drC- menu. 50 Hz: IEC 60 Hz: NEMA This parameter modifies the presets of the following parameters: HSP page 24, Ftd page 26, FrS page 26 and tFr page 27.		

Settings menu SEt-

The adjustment parameters can be modified with the drive running or stopped.

Check that it is safe to make changes during operation.
Changes should preferably be made with the drive stopped.

Code	Description	Adjustment range	Factory setting
ACC dEC	**Acceleration and deceleration ramp times**	0.1 to 999.9 s 0.1 to 999.9 s	3 s 3 s
	Defined for accelerating and decelerating between 0 and the nominal frequency FrS (parameter in the drC- menu). Check that the value of dEC is not too low in relation to the load to be stopped.		
LSP	**Low speed**	0 to HSP	0 Hz
	(motor frequency to min. reference)		
HSP	**High speed**	LSP to tFr	bFr
	(motor frequency to max. reference): Check that this setting is suitable for the motor and the application.		
ItH	**Motor thermal protection - max. thermal current**	0 to 1.5 In (1)	According to drive rating
	Set ItH to the nominal current on the motor rating plate. Please refer to the CD-ROM if you wish to suppress thermal protection.		
UFr	**IR compensation/Voltage boost**	0 to 100%	20%
	Used to optimise torque at very low speed (increase UFr if the torque is insufficient). Check that the value of UFr is not too high for when the motor is warm (risk of instability). Modifying UFt (page 27) will cause UFr to return to the factory setting (20%).		

(1) In corresponds to the nominal drive current indicated in the catalogue and on the drive rating plate.

Code	Description	Adjustment range	Factory setting
FLG	**Frequency loop gain**	1 to 100%	20
	Parameter can only be accessed if UFt (page 27) = n or nLd. The FLG parameter adjusts the following of the speed ramp on the basis of the inertia of the machine being driven. Value too low: Longer response time Value too high: Overspeed, instability		
StA	**Frequency loop stability**	1 to 100%	20
	Parameter can only be accessed if UFt (page 27) = n or nLd. Value too low: Overspeed, instability Value too high: Longer response time		
SLP	**Slip compensation**	0 to 150%	100
	Parameter can only be accessed if UFt (page 27) = n or nLd. Used to adjust the slip compensation value fixed by motor nominal speed. The speeds given on motor rating plates are not necessarily exact. • If slip setting < actual slip: The motor is not rotating at the correct speed in steady state. • If slip setting > actual slip: The motor is overcompensated and the speed is unstable.		
tdC1	**Automatic standstill DC injection time**	0.1 to 30 s	0.5 s
SdC1	**Level of automatic standstill DC injection current**	0 to 1.2 In (1)	0.7 In (1)
	⚠ Check that the motor will withstand this current without overheating.		
tdC2	**Second automatic standstill DC injection time** Please refer to the CD-ROM.	0 to 30 s	0 s
SdC2	**Second level of standstill DC injection current** Please refer to the CD-ROM.	0 to 1.2 In (1)	0.5 In (1)
JPF	**Skip frequency**	0 to 500	0 Hz
	Prevents prolonged operation at a frequency range of ± 1 Hz around JPF. This function prevents a critical speed which leads to resonance. Setting the function to 0 renders it inactive.		
JF2	**Second skip frequency**	0 to 500	0 Hz
	Prevents prolonged operation at a frequency range of ± 1 Hz around JF2. This function prevents a critical speed which leads to resonance. Setting the function to 0 renders it inactive.		
SP2	**Second preset speed**	0.0 to 500.0 Hz	10 Hz
SP3	**Third preset speed**	0.0 to 500.0 Hz	15 Hz
SP4	**Fourth preset speed**	0.0 to 500.0 Hz	20 Hz
CLI	**Current limiting**	0.25 to 1.5 In (1)	1.5 In (1)
	Used to the torque and the temperature rise of the motor.		

(1) In corresponds to the nominal drive current indicated in the catalogue and on the drive rating plate.

Code	Description	Adjustment range	Factory setting
tLS	**Low speed operating time**	0 to 999.9 s	0 (no time limit)
	Following operation at LSP for a defined period, a motor stop is requested automatically. The motor restarts if the frequency reference is greater than LSP and if a run command is still present. Caution: Value 0 corresponds to an unlimited period.		
Ftd	Not used (please refer to CD-ROM).		
ttd	Not used (please refer to CD-ROM).		
Ctd	Not used (please refer to CD-ROM).		
SdS	Not used (please refer to CD-ROM).		
SFr	**Switching frequency**	2.0 to 16 kHz	4 kHz
	This parameter can also be accessed in the drC- menu.		

Motor control menu drC-

With the exception of tUn, which can power up the motor, parameters can only be modified when the drive is stopped and there is no run command present.
Drive performance can be optimized by:

- **Entering the values given on the motor rating plate in the drive menu**
- **Performing an auto-tune operation (on a standard asynchronous motor)**

Code	Description	Adjustment range	Factory setting
bFr	**Standard motor frequency**		50
	50 Hz: IEC 60 Hz: NEMA This parameter modifies the presets of the following parameters: HSP page 24, Ftd page 26, FrS page 26 and tFr page 27.		
UnS	**Nominal motor voltage given on the rating plate**	According to drive rating	According to drive rating
FrS	**Nominal motor frequency given on the rating plate**	10 to 500 Hz	50 Hz
	The factory setting is 50 Hz, or 60 Hz if bFr is set to 60 Hz.		
nCr	**Nominal motor current given on the rating plate**	0.25 to 1.5 In (1)	According to drive rating
nSP	**Nominal motor speed given on the rating plate**	0 to 32760 RPM	According to drive rating
	0 to 9999 RPM then 10.00 to 32.76 KRPM If the nominal speed is not given on the rating plate, please refer to the CD-ROM.		
COS	**Motor Cos Phi given on the rating plate**	0.5 to 1	According to drive rating
rSC	Leave at nO or see CD-ROM.		nO

(1) In corresponds to the nominal drive current indicated in the catalogue and on the drive rating plate.

Code	Description	Adjustment range	Factory setting
tUn	**Motor control auto-tuning**		nO
	It is essential that all the motor parameters (UnS, FrS, nCr, nSP, COS) are configured correctly before performing auto-tuning. nO: Auto-tuning not performed. YES: Auto-tuning is performed as soon as possible, then the parameter automatically switches to dOnE or nO in the event of a fault (the tnF fault is displayed). dOnE: Use of the values given the last time auto-tuning was performed. rUn: Auto-tuning is performed every time a run command is sent. POn: Auto-tuning is performed on every power-up. LI1 to LI6: Auto-tuning is performed on the transition from 0 ➜ 1 of a logic input assigned to this function. **Caution**: Auto-tuning is only performed if no command has been activated. Auto-tuning may last for 1 to 2 seconds. Do not interrupt; wait for the display to change to "dOnE" or "nO". ⚠ During auto-tuning the motor operates at nominal current.		
tUS	**Auto-tuning status** (information only, cannot be modified)		tAb
	tAb: The default stator resistance value is used to control the motor. PEnd: Auto-tuning has been requested but not yet performed. PrOG: Auto-tuning in progress. FAIL: Auto-tuning has failed. dOnE: The stator resistance measured by the auto-tuning function is used to control the motor.		
UFt	**Selection of the type of voltage/frequency ratio**		n
	L: Constant torque for motors connected in parallel or special motors P: Variable torque: Pump and fan applications n: Sensorless flux vector control for constant torque applications nLd: Energy saving, for variable torque applications not requiring high dynamics (behaves in a similar way to the P ratio at no-load and the n ratio on load).		
nrd	**Random switching frequency**		YES
	YES: Frequency with random modulation nO: Fixed frequency Random frequency modulation prevents any resonance which may occur at a fixed frequency.		
SFr	**Switching frequency** (1)	2.0 to 16 kHz	4 kHz
	The frequency can be adjusted to reduce the noise generated by the motor. If the frequency has been set to a value higher than 4 kHz, in the event of excessive temperature rise, the drive will automatically reduce the switching frequency and increase it again once the temperature has returned to normal.		
tFr	**Maximum output frequency**	10 to 500 Hz	60 Hz
	The factory setting is 60 Hz, or 72 Hz if bFr is set to 60 Hz.		
SSL	**Suppression of the speed loop filter**		nO
	nO: The speed loop filter is active (prevents the reference being exceeded). YES: The speed loop filter is suppressed (in position control applications, this reduces the response time and the reference may be exceeded).		

(1) Parameter can also be accessed in the SEt- menu.

Code	Description	Adjustment range	Factory setting
SCS	**Saving the configuration** (1)		nO
	nO: Function inactive Str I: Saves the current configuration (but not the result of auto-tuning) to EEPROM. SCS automatically switches to nO as soon as the save has been performed. This function is used to keep another configuration in reserve, in addition to the current configuration. When drives leave the factory the current configuration and the backup configuration are both initialized with the factory configuration.		
FCS	**Return to factory setting/Restore configuration** (1)		nO
	nO: Function inactive rECI: The current configuration becomes identical to the backup configuration previously saved by SCS = Strl. rECI is only visible if the backup has been carried out. FCS automatically switches to nO as soon as this action has been performed. InI: The current configuration becomes identical to the factory setting. FCS automatically switches to nO as soon as this action has been performed. ⚠ For rECI and InI to be taken into account the ENT key must be held down for 2 s.		

(1) SCS and FCS can be accessed via several configuration menus but they concern all menus and parameters as a whole.

I/O menu I-O-

Parameters can only be modified when the drive is stopped and no run command is present.

Code	Description	Factory setting
tCC	**2-wire/3-wire control (type of control)**	2C ATV31●●●A: LOC
	Control configuration: 2C = 2-wire control 3C = 3-wire control LOC = local control (drive RUN/STOP/RESET) for ATV31●●●A only. 2-wire control: The open or closed state of the input controls running or stopping. 3-wire control (pulse control): A "forward" or "reverse" pulse is sufficient to control starting, a "stop" pulse is sufficient to control stopping. Please refer to the CD-ROM. On ATV31●●●A, reconfiguring tCC = 2C reassigns the LI1 (forward) and LI2 (reverse) inputs. Although this renders the RUN button on the drive inactive, the speed reference is still provided by the potentiometer. The potentiometer can be deactivated and the speed reference assigned to analog input AI1 by configuring parameter Fr1 = AI1 in the CtL- menu. Please refer to the CD-ROM. ⚠ To change the assignment of tCC press the "ENT" key for 2 s. This causes the following functions to return to their factory setting: rrS, tCt and all functions affecting logic inputs.	

Code	Description	Factory setting
tCt	**Type of 2-wire control** (parameter only accessible if tCC = 2C)	trn
	LEL: State 0 or 1 is taken into account for run or stop. trn: A change of state (transition or edge) is necessary to initiate operation, in order to prevent accidental restarts after a break in the power supply. PFO: State 0 or 1 is taken into account for run or stop, but the "forward" input always takes priority over the "reverse" input.	
rrS	**Reverse operation via logic input**	if tCC = 2C: LI2 if tCC = 3C: LI3 if tCC = LOC: nO
	If rrS = nO, reverse operation is active, by means of negative voltage on AI2 for example. nO: Not assigned LI2: Logic input LI2, can be accessed if tCC = 2C LI3: Logic input LI3 LI4: Logic input LI4 LI5: Logic input LI5 LI6: Logic input LI6	
CrL3 CrH3 AOIt dO r1 r2	Please refer to the CD-ROM.	
SCS FCS	Identical to drC- menu, page 28	

Display menu SUP-

Parameters can be accessed with the drive running or stopped.

Some functions have numerous parameters. In order to clarify programming and avoid having to scroll through lists of parameters, these functions have been grouped in sub-menus.
Like menus, sub-menus are identified by a dash after their code: LIF-, for example.

When the drive is running, the value displayed is that of one of the monitoring parameters. By default, the value displayed is the output frequency applied to the motor (rFr parameter).

While the value of the required new monitoring parameter is being displayed, the "ENT" key must be pressed and held down a second time (for 2 seconds) to confirm the change of monitoring parameter and to store it. From then on the value of this parameter will be displayed during operation (even after the drive has been switched off).
If the new choice is not confirmed by pressing the "ENT" key a second time, the drive will return to the previous parameter after it has been switched off.

Code	Description	Variation range
LFr	**Frequency reference for control via integrated terminal or remote terminal.**	0 to 500 Hz
rPI	**Internal PI reference**	0 to 100%

These parameters only appear if the function has been enabled.

Code	Description	Variation range
FrH	**Frequency reference before ramp** (absolute value)	0 to 500 Hz
rFr	**Output frequency applied to the motor**	- 500 Hz to + 500 Hz
SPd	**Output value in customer units**	
	Please refer to the CD-ROM.	
LCr	**Current in the motor**	
OPr	**Motor power**	
	100% = Nominal motor power	
ULn	**Line voltage** (gives the line voltage via the DC bus, motor running or stopped)	
tHr	**Motor thermal state**	
	100% = Nominal thermal state 118% = "OLF" threshold (motor overload)	
tHd	**Drive thermal state**	
	100% = Nominal thermal state 118% = "OHF" threshold (motor overload)	
LFt	**Last fault**	
	See Faults - Causes - Remedies, page 31	
Otr	**Motor torque**	
	100% = nominal motor torque	
rtH	**Operating time**	0 to 65530 hours
	Total time the motor has been powered up: 0 to 9999 (hours), then 10.00 to 65.53 (kilo-hours). Can be reset to zero by the rPr parameter in the FLt- menu (please refer to the CD-ROM).	
COd	**Terminal locking code**	
	Please refer to the CD-ROM.	
tUS	**Auto-tuning status**	
	tAb: The default stator resistance value is used to control the motor. PEnd: Auto-tuning has been requested but not yet performed. PrOG: Auto-tuning in progress FAIL: Auto-tuning has failed. dOnE: The stator resistance measured by the auto-tuning function is used to manage driving.	
UdP	**Indicates the ATV31 software version**	
	E.g.: 1102 = V1.1 IE02.	
LIA-	**Logic input functions**	
	Please refer to the CD-ROM.	
AIA-	**Analog input functions**	
	Please refer to the CD-ROM.	

Faults - Causes - Remedies

Assistance with maintenance, fault display

If a problem arises during setup or operation, ensure that the recommendations relating to the environment, mounting and connections have been observed.

The first fault detected is stored and displayed, flashing, on the screen: the drive locks and the fault relay (R1A - R1C or R2A - R) contact opens.

Drive does not start, no fault displayed

- If the display does not light up, check the power supply to the drive.
- Other cases: Please refer to the CD-ROM.

Faults to be reset

The cause of the fault should be rectified before resetting by powering down until the display goes out, then switching on again.

Fault	Probable cause	Remedy
CnF CANopen fault	• CANopen bus communication interrupted	• Check the communication bus. • Please refer to the product-specific documentation.
CrF capacitor load circuit	• Load relay control fault or charging resistor damaged	• Replace the drive.
EEF EEPROM fault	• internal memory fault	• Check the environment (electromagnetic compatibility). • Replace the drive.
InF internal fault	• Internal fault	• Check the environment (electromagnetic compatibility). • Replace the drive.
LFF Loss of 4-20mA	• Loss of the 4-20 mA reference on input AI3	• Check the connection on input AI3.
ObF overvoltage during deceleration	• Braking too sudden • Driving load	• Increase the deceleration time. • Install a braking resistor if necessary. • See the brA function (please refer to the CD-ROM).
OCF overcurrent	• Incorrect parameters in the SEt- and drC- menus • Inertia or load too high • Mechanical locking	• Check the SEt- and drC- parameters. • Check the size of the motor/drive/load. • Check the state of the mechanism.
OHF drive overload	• Drive temperature too high	• Check the motor load, the drive ventilation and the environment. Wait for the drive to cool down before restarting.
OLF motor overload	• Triggered by excessive motor current	• Check the ItH setting (motor thermal protection) (page 24), check the motor load. Wait for the drive to cool down before restarting.

Fault	Probable cause	Remedy
OPF motor phase break	• Loss of phase at drive output • Downstream contactor open • Motor not connected or motor power too low • Instantaneous instability in the motor current	• Check the connections from the drive to the motor. • If a downstream contactor is being used, set OPL to OAC (please refer to the CD-ROM, FLt- menu). • Test on a low power motor or without a motor: set OPL to nO (please refer to the CD-ROM, FLt- menu). • Check and optimise the UFr (page 24), UnS and nCr (page 26) parameters and perform auto-tuning with tUn (page 27).
OSF overvoltage	• Line voltage too high • Disturbed line supply	• Check the line voltage.
PHF input phase failure	• Failure of one phase • 3-phase ATV31 used on a single phase line supply • Unbalanced load This protection only operates with the drive on load.	• Check the connection and the fuses. • Use a 3-phase line supply. • Disable the fault by setting IPL = nO (please refer to the CD-ROM)
SCF motor short-circuit	• Short-circuit or earthing at the drive output • Significant earth leakage current at the drive output if several motors are connected in parallel	• Check the cables connecting the drive to the motor, and the motor insulation. • Reduce the switching frequency. • Connect chokes in series with the motor.
SLF Modbus fault	• Modbus bus communication interrupted	• Check the communication bus. • Please refer to the product-specific documentation.
SOF overspeed	• Instability • Driving load too high	• Check the motor, gain and stability parameters. • Add a braking resistor. • Check the size of the motor/drive/load.
tnF auto-tuning fault	• Special motor or motor whose power is not suitable for the drive • Motor not connected to the drive	• Use the L or the P ratio (Uft page 27). • Check the presence of the motor during auto-tuning. • If a downstream contactor is being used, close it during auto-tuning.

Faults which can be reset as soon as their cause disappears

Fault	Probable cause	Remedy
CFF configuration fault	• The current configuration is incompatible.	• Return to factory settings or call up the backup configuration, if it is valid. See parameter FCS in the drC- menu, page 28.
CFI configuration fault via serial link	• Invalid configuration (the configuration loaded in the drive via the serial link is incompatible).	• Check the configuration loaded previously. • Load a compatible configuration.
USF undervoltage	• Line supply too low • Transient voltage dip • Damaged load resistor	• Check the voltage and the voltage parameter. • Replace the drive.

Inhaltsverzeichnis

Einleitende Empfehlungen _____ 34
Vorgehensweise zur Inbetriebnahme _____ 35
Werkseitige Konfiguration _____ 36
Ersetzen eines ATV 28 durch einen ATV 31 _____ 36
Elektromagnetische Verträglichkeit _____ 37
Funktionen der Anzeige und der Tasten _____ 38
Zugriff auf die Menüs _____ 39
Konfiguration des Parameters bFr _____ 40
Menü „Einstellung“ Set- _____ 40
Menü „Antrieb“ drC- _____ 42
Menü „Eingänge/Ausgänge“ I-O- _____ 44
Menü „Überwachung“ SUP- _____ 45
Fehler - Ursachen - Behebung _____ 47

Während des Betriebs kann es durch das Zurücksetzen von Fahrbefehlen oder Sollwerten zu einem Anhalten des Motors kommen, wobei das Gerät weiterhin unter Spannung steht. Wenn zur Sicherheit des Bedienpersonals ein unkontrolliertes Wiederanfahren ausgeschlossen sein muss, reicht diese elektronische Verriegelung nicht aus: *Sehen Sie zu diesem Zweck eine Trennung des Leistungsschaltkreises vor.*

Der Umrichter verfügt über Sicherheitsvorrichtungen, die bei Störungen das Gerät selbst und damit auch den Motor abschalten können. Der Motor kann auch durch mechanische Fehler blockiert werden. Ebenso können Schwankungen der Versorgungsspannung oder Stromausfälle die Ursache für das Anhalten der Motoren sein.
Nach Beseitigung der Ursache, die das Anhalten ausgelöst hat, kann es bei einigen Maschinen und Anlagen durch den automatischen Wiederanlauf zu einem erhöhten Risiko kommen; insbesondere ist dies bei Maschinen zu berücksichtigen, die bestimmten Sicherheitsanforderungen entsprechen müssen.

Sofern dies der Fall ist, hat der Betreiber durch die Verwendung von Drehzahlwächtern, welche die Versorgungsspannung des Umrichters abschalten, dafür Sorge zu tragen, dass ein Wiederanfahren des Motors nach einem nicht vorgesehenen Anhaltevorgang nicht möglich ist.

Einbau und Inbetriebnahme dieses Umrichters müssen den internationalen IEC-Normen und den am Einbauort geltenden nationalen Normen entsprechen. Der Anwender ist für die Einhaltung dieser Normen verantwortlich. Innerhalb der Europäischen Union sind außerdem die entsprechenden Vorschriften zur Elektromagnetischen Verträglichkeit (EMV) zu befolgen.
Die in diesem Dokument enthaltenen Angaben müssen angewendet werden, um die grundlegenden Anforderungen der EMV-Richtlinie zu erfüllen.

Der Altivar 31 muss als Komponente angesehen werden. Er ist weder eine Maschine noch ein einsatzbereites Gerät nach europäischen Vorschriften (Maschinenrichtlinie und Richtlinie zur elektromagnetischen Verträglichkeit). Es liegt in der Verantwortung des Betreibers, dafür zu sorgen, dass seine Anlage diesen Vorschriften entspricht.

Der Frequenzumrichter darf nicht als Sicherheitseinrichtung für Maschinen verwendet werden, die eine Gefahr für Mensch oder Material darstellen (beispielsweise Hebezeuge). Die Überwachung von Überdrehzahl oder Ausreißen muss gegebenenfalls durch andere, vom Frequenzumrichter unabhängige Geräte gewährleistet sein.

Technische und betriebsrelevante Änderungen zu den in diesen Unterlagen aufgeführten Produkten und Geräten sind jederzeit auch ohne Vorankündigung vorbehalten. Die hierin enthaltenen Beschreibungen sind unverbindlich.

Einleitende Empfehlungen

Diese Kurzanleitung beschreibt die Schnellinbetriebnahme für die werkseitige Konfiguration des Frequenzumrichters.

Alle in diesem Dokument beschriebenen Funktionen, Parameter und Fehler beziehen sich auf die Werkskonfiguration. Wurde diese Konfiguration über eines der Menüs CtL-, FUn- oder FLt- geändert, können sich Abweichungen ergeben.
Die mit dem Frequenzumrichter gelieferte CD-ROM enthält die vollständige Beschreibung sowie alle Konfigurationsmenüs.

Bevor Sie den Umrichter einschalten und konfigurieren:

- **Stellen Sie sicher, dass die Netzspannung mit dem zulässigen Spannungsbereich des Umrichters kompatibel ist. Bei falscher Netzspannung besteht die Gefahr, dass der Umrichter beschädigt wird.**
- **Schalten Sie die Logikeingänge (logisch 0) aus, um einen versehentlichen Anlauf zu verhindern. Unterbleibt dies, kann nach Verlassen der Konfigurationsmenüs ein mit einem Fahrbefehl belegter Eingang sofort das Anlaufen des Motors auslösen.**

Benutzereinstellung und Funktionserweiterungen

Falls notwendig, können mit Hilfe der Anzeige und der Tastatur die Einstellungen verändert und die Funktionen erweitert werden. Die **Rückkehr zu den Werkseinstellungen** erfolgt auf einfache Weise über den Parameter FCS des Menüs drC-.
Drei verschiedene Parameter stehen zur Auswahl:
- Anzeige: vom Frequenzumrichter angezeigte Werte
- Einstellung: sowohl im Betrieb als auch bei Stillstand veränderbar
- Konfiguration: nur bei Stillstand und ohne Bremsung veränderbar. Kann bei Betrieb angezeigt werden.

- **Stellen Sie sicher, dass während des Betriebs vorgenommene Änderungen an den Einstellungen keine Gefahr darstellen. Führen Sie diese am besten bei Stillstand durch.**

Anlauf

Wichtig: Gemäss Werkseinstellung kann der Motor beim Einschalten, beim manuellen Rücksetzen nach einer Störung oder nach einem Haltebefehl erst nach dem Rücksetzen der Befehle „Rechtslauf“ oder „Linkslauf“ wieder anlaufen. In Ermangelung dessen zeigt der Umrichter auf dem Display “nst” an, läuft aber nicht an.

Test mit einem Motor mit geringer Leistung oder ohne Motor

Bei der werkseitigen Einstellung ist die Funktion zur Erkennung eines Phasenausfalls des Motors aktiviert. Wenn der Umrichter getestet werden soll oder Wartungsarbeiten durchzuführen sind, ohne dass auf einen dem Umrichtermodell entsprechenden Motor zurückgegriffen werden soll (dies gilt vor allem für Hochleistungsumrichter), ist die Funktion zur Erkennung von Motorphasenausfällen zu deaktivieren und die Spannung/Frequenz-Kennlinie UFt = L (vgl. CD-ROM) zu konfigurieren.

Betrieb in IT-Netzen

IT-Netz: Isolierter oder über eine hohe Impedanz geerdeter Neutralleiter.
Verwenden Sie ein permanentes Isolationsüberwachungsgerät, das mit nicht-linearen Lasten kompatibel ist: beispielsweise des Typs XM200 von Merlin Gerin.
ATV 31●●●M2 und N4 enthalten integrierte EMV-Filter. Für den Betrieb in IT-Netzen können diese Filter von der Masse abgeklemmt werden.
Weitere Informationen finden Sie auf der mit dem Umrichter gelieferten CD-ROM.

Vorgehensweise zur Inbetriebnahme

1 - Empfang des Frequenzumrichters

- Überprüfen Sie, ob die Angaben auf dem Typenschild des Umrichters mit denen auf dem Lieferschein und dem Bestellschein übereinstimmen.
- Öffnen Sie die Verpackung und prüfen Sie, ob der Altivar 31 während des Transports beschädigt wurde.

2 – Überprüfen Sie, ob die Netzspannung mit dem Spannungsbereich des Umrichters kompatibel ist (vgl. Typenschild des Umrichters)

- Bei falscher Netzspannung besteht die Gefahr, dass der Umrichter beschädigt wird.

3 - Einbau des Umrichters

4 - Anschlüsse am Umrichter:

- Versorgungsnetz: achten Sie darauf, dass es:
  - **im Spannungsbereich des Umrichters liegt**
  - **ausgeschaltet ist**
- Motor: achten Sie darauf, dass die Motorschaltung der Netzspannung entspricht
- Steuerung über die Logikeingänge
- Frequenzsollwert über die Logik- oder Analogeingänge

5 - Einschalten ohne Fahrbefehl

6 - Konfiguration:

Nennfrequenz (bFr) des Motors, falls sie nicht 50 Hz beträgt.

7 - Konfiguration im Menü drC-:

Die Motorparameter sind nur zu konfigurieren, wenn die Werkseinstellung des Umrichters nicht geeignet ist.

8 - Konfiguration im Menü I-O-:

Nur wenn die Werkseinstellung des Frequenzumrichters nicht geeignet ist, findet folgender Steuermodus Anwendung: 3-Draht-Steuerung, 2-Draht-Steuerung bei Übergang, 2-Draht-Steuerung bei Niveau, 2-Draht-Steuerung bei Niveau mit Vorrang für Rechtslauf oder lokale Steuerung bei ATV31●●●A.

Stellen Sie unbedingt sicher, dass die programmierten Funktionen mit der jeweiligen Verdrahtung vereinbar sind.

9 - Einstellung im Menü SEt-:

- Parameter ACC (Hochlauframpe) und dEC (Auslauframpe),
- Parameter LSP (Kleine Frequenz bei Sollwert Null) und HSP (Große Frequenz bei maximalem Sollwert),
- Parameter ItH (Thermoschutz des Motors),

10 - Starten

Praktische Hinweise

- **Die Rückkehr zu den Werkseinstellungen** kann jederzeit über den FCS-Parameter (FCS = InI setzen) in den Menüs drC- (Seite 44) oder I-O- (Seite 45) erfolgen.
- Mit Hilfe der über den Parameter tUn des Menüs drC- (Seite 43) auszuführenden Motormessung erzielen Sie die optimale Leistung hinsichlich Genauigkeit und Reaktionszeit.

Werkseitige Konfiguration

Der Altivar 31 wurde werkseitig für die am häufigsten benötigten Anwendungen voreingestellt:
- Anzeige: Umrichter bereit (rdY) (im Stillstand) und Motorfrequenz (in Betrieb).
- Motorfrequenz (bFr): 50 Hz.
- Betrieb bei konstantem Drehmoment, mit vektorieller Regelung ohne Rückführung (UFt = n).
- Modus: Normales Anhalten über Auslauframpe.
- Modus: Anhalten bei Störung: Freilauf
- Lineare Rampen (ACC, dEC): 3 Sekunden.
- Kleine Frequenz (LSP): 0 Hz.
- Große Frequenz (HSP): 50 Hz.
- Thermischer Motorstrom (ItH) = Motornennstrom (Wert je nach Baugröße des Umrichters).
- Bremsstrom bei DC-Aufschaltung im Stillstand (SdC1) = 0,7 x Nennstrom des Umrichters, während 0,5 Sekunden.
- Automatische Anpassung der Auslauframpe im Falle von Überspannung beim Bremsen.
- Kein automatischer Wiederanlauf nach einer Störung.
- Taktfrequenz 4 kHz.
- Logikeingänge:
  - LI1, LI2 (2 Drehrichtungen): 2-Draht-Steuerung bei Übergang, LI1 = Rechtslauf, LI2 = Linkslauf, inaktiv bei ATV 31●●●●●●A (nicht belegt).
  - LI3, LI4: 4 Vorwahlfrequenzen (Frequenz 1 = Frequenzsollwert oder LSP, Frequenz 2 = 10 Hz, Frequenz 3 = 15 Hz, Frequenz 4 = 20 Hz).
  - LI5 - LI6: inaktiv (nicht zugordnet).
- Analogeingänge:
  - AI1: Frequenzsollwert 0-10 V, inaktiv bei ATV 31●●●●●●A (nicht belegt).
  - AI2: Frequenzsollwert-Summierung 0±10 V.
  - AI3: 4-20 mA inaktiv (nicht belegt).
- Relais R1: bei einer Störung (oder Umrichter ohne Spannung) fällt der Kontakt ab.
- Relais R2: inaktiv (nicht belegt).
- Analogausgang AOC: 0-20 mA inaktiv (nicht belegt).

Reihe ATV 31●●●●●●A

Die Umrichter ATV 31●●●●●●A werden ab Werk mit aktivierter lokaler Steuerung ausgeliefert: die Tasten RUN, STOP und das Potentiometer des Umrichters sind aktiv. Die Logikeingänge LI1 und LI2 sowie der Analogeingang AI1 sind inaktiv (nicht belegt).
Wenn die oben genannten Werte mit der Anwendung vereinbar sind, kann der Umrichter ohne Modifizierung der Einstellungen eingesetzt werden.

Ersetzen eines ATV 28 durch einen ATV 31

Die untenstehende Tabelle zeigt die Entsprechung der Steuerklemmenleisten zwischen beiden Umrichtermodellen an.

Steuerklemmleisten ATV 28	Werkseinstellung Fkt.	Steuerklemmleisten ATV 31	Werkseinstellung Fkt.
R1A - R1B - R1C	Störmelderelais	R1A - R1B - R1C	Störmelderelais
R2A - R2C	Drehzahlsollwert erreicht	R2A - R2C	Nicht belegt
COM	0 V	COM	0 V
AI1 (0 -10 V)	Drehzahlsollwert	AI1 (0 - 10 V)	Drehzahlsollwert
+10 V	+10 V	10 V	+10 V
AI2 (0 - 10 V)	Frequenzsollwert-Summierung	AI2 (0 - ± 10 V)	Frequenzsollwert-Summierung
AIC (X - Y mA)	Nicht belegt	AI3 (X - Y mA)	Nicht belegt
AO	Motorfrequenz	AOC / AOV	Nicht belegt
LI1 - LI2	Rechtslauf / Linkslauf	LI1 - LI2	Rechtslauf / Linkslauf
LI3 - LI4	Vorwahlfrequenzen	LI3 - LI4	Vorwahlfrequenzen
+24 V	+ 24 V	24 V	+ 24 V

Elektromagnetische Verträglichkeit

Prinzip

- Erdverbindungen zwischen Frequenzumrichter, Motor und Kabelabschirmung müssen nach Hochfrequenz-Gesichtspunkten niederohmig gestaltet sein.
- Verwenden Sie abgeschirmte Kabel, wobei die Abschirmung der Motorkabel **6**, des eventuellen Bremswiderstands **8** sowie von Steuerung und Überwachung **7** beidseitig rundum kontaktiert und geerdet sein muss. Diese Abschirmung kann ganz oder teilweise in Form von Rohren oder Metallkanälen ausgeführt werden, solange keine Unterbrechungen der Verbindungen vorkommen. Im Falle zwischenliegender Klemmleisten, müssen sich diese in einem abgeschirmten Metallgehäuse befinden.
- Das Spannungsversorgungskabel (Netz) so weit entfernt wie möglich vom Motorkabel verlegen.

Installationsdiagramm (Beispiel)

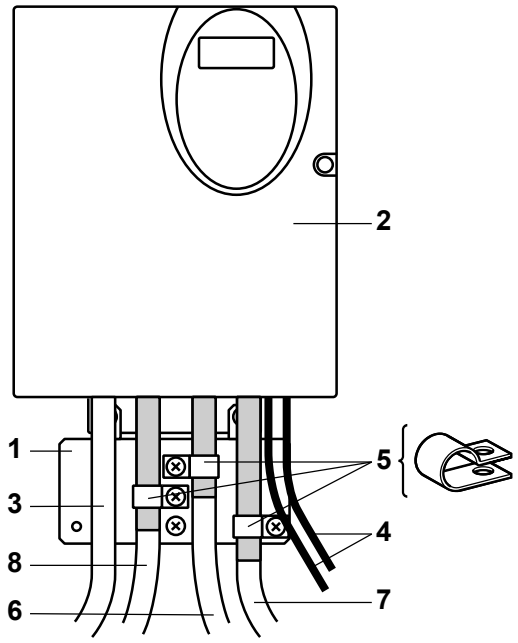

1 Im Lieferumfang enthaltene EMV-Platte, die wie in der Abbildung angegeben auf den Umrichter zu montieren ist.

2 Altivar 31

3 Nicht abgeschirmte Netzanschlusskabel.

4 Nicht abgeschirmte Kabel für Relaiskontakte.

5 Die Abschirmung für die Kabel 6, 7 und 8 muss so nahe wie möglich am Frequenzumrichter befestigt und niederohmig geerdet werden:
- Die Abschirmung abisolieren,
- Die abisolierten Teile der Abschirmung mit Edelstahl-Kabelschellen der richtigen Größe an der EMV-Platte 1 befestigen.
Die Kabelschellen müssen fest angezogen werden, um einen guten Kontakt zu gewährleisten.

6 Abgeschirmtes Motoranschlusskabel. Verwenden Sie bei Frequenzumrichtern von 0,18 bis 1,5 kW niedrigpaarige Kabel, wenn die Taktfrequenz über 12 kHz liegt: maximal 130 pF (picoFarad) pro Meter.

7 Abgeschirmtes Steuerkabel für den Anschluss der Steuerung/ Überwachung.
Verwenden Sie für Anwendungen, die zahlreiche Leiter erfordern, kleine Querschnitte (0,5 mm^2).

8 Abgeschirmtes Kabel für den Anschluss des eventuell vorhandenen Bremswiderstandes.

Hinweis:

- Bei Verwendung eines zusätzlichen Netzfilters muss dieser unter dem Umrichter angebracht und über ein nicht abgeschirmtes Kabel direkt an das Netz angeschlossen werden. Der Anschluss (3) am Umrichter wird durch das Ausgangskabel des Filters realisiert.
- Die niederohmige Erdung von Frequenzumrichter, Motor und Kabelabschirmung entbindet nicht davon, die Schutzleiter PE (grün-gelb) an die entsprechenden Anschlüsse an jeder Komponente anzuschließen.

Funktionen der Anzeige und der Tasten

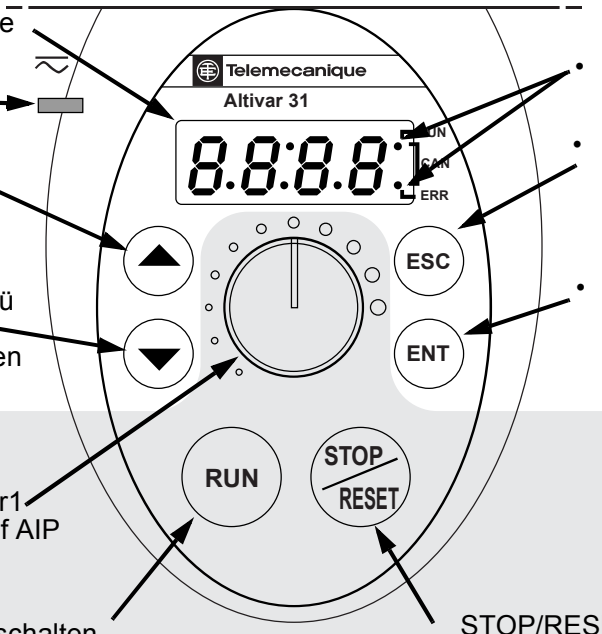

- 4-stellige 7-Segment-Anzeige
- Rote LED "DC-Bus unter Spannung"
- Wechsel zum vorherigen Menü oder Parameter oder Erhöhen des angezeigten Werts
- Wechsel zum nächsten Menü oder Parameter oder Verringerung des angezeigten Werts

- 2 Zustandsanzeigen CANopen
- Verlassen eines Menüs oder Parameters oder Rückkehr vom angezeigten Wert zum zuletzt gespeicherten Wert
- Aufruf eines Menüs oder Parameters oder Speicherung des Parameters oder des angezeigten Werts

Nur für ATV 31●●●●●●A

- Sollwertpotentiometer, aktiv, wenn der Parameter Fr1 des Menüs CtL- weiterhin auf AIP eingestellt ist.

- RUN-Taste: Steuert das Einschalten des Motors im Rechtslauf, wenn der Parameter tCC im Menü I-O- auf LOC eingestellt ist

STOP/RESET-Taste

- Setzt den Fehler auf Null zurück.
- Kann jederzeit den Stillstand des Motors erwirken.
  - Wenn tCC (Menü I-O-) nicht auf LOC eingestellt ist, erfolgt das Anhalten im freien Auslauf.
  - Wenn tCC (Menü I-O-) auf LOC eingestellt ist, erfolgt das Anhalten über Rampe. Ist jedoch eine Bremsung mit DC-Aufschaltung aktiv, erfolgt das Anhalten im freien Auslauf.

• (▲) oder (▼) speichert nicht die Auswahl.

• Längeres Drücken (>2 s) von (▲) oder (▼) bewirkt einen Schnelldurchlauf.

Speicherung, Aufzeichnung der angezeigten Auswahl: (ENT)

Bei Speicherung blinkt die Anzeige

Normalanzeige ohne Störung und außer Betrieb:
- 43.0: Anzeige des gewählten Parameters im Menü SUP (Voreinstellung: Motorfrequenz). Im Falle einer Strombegrenzung blinkt die Anzeige.
- init: Initialisierungssequenz
- rdY: Umrichter bereit
- dcb: Bremsung mit DC-Aufschaltung erfolgt
- nSt: Freier Auslauf
- FSt: Schnellhalt
- tUn: Motormessung läuft

Eine Störung wird durch Blinken angezeigt.

Option Bedienterminal
Informationen hierzu finden Sie auf der CD-ROM.

Zugriff auf die Menüs

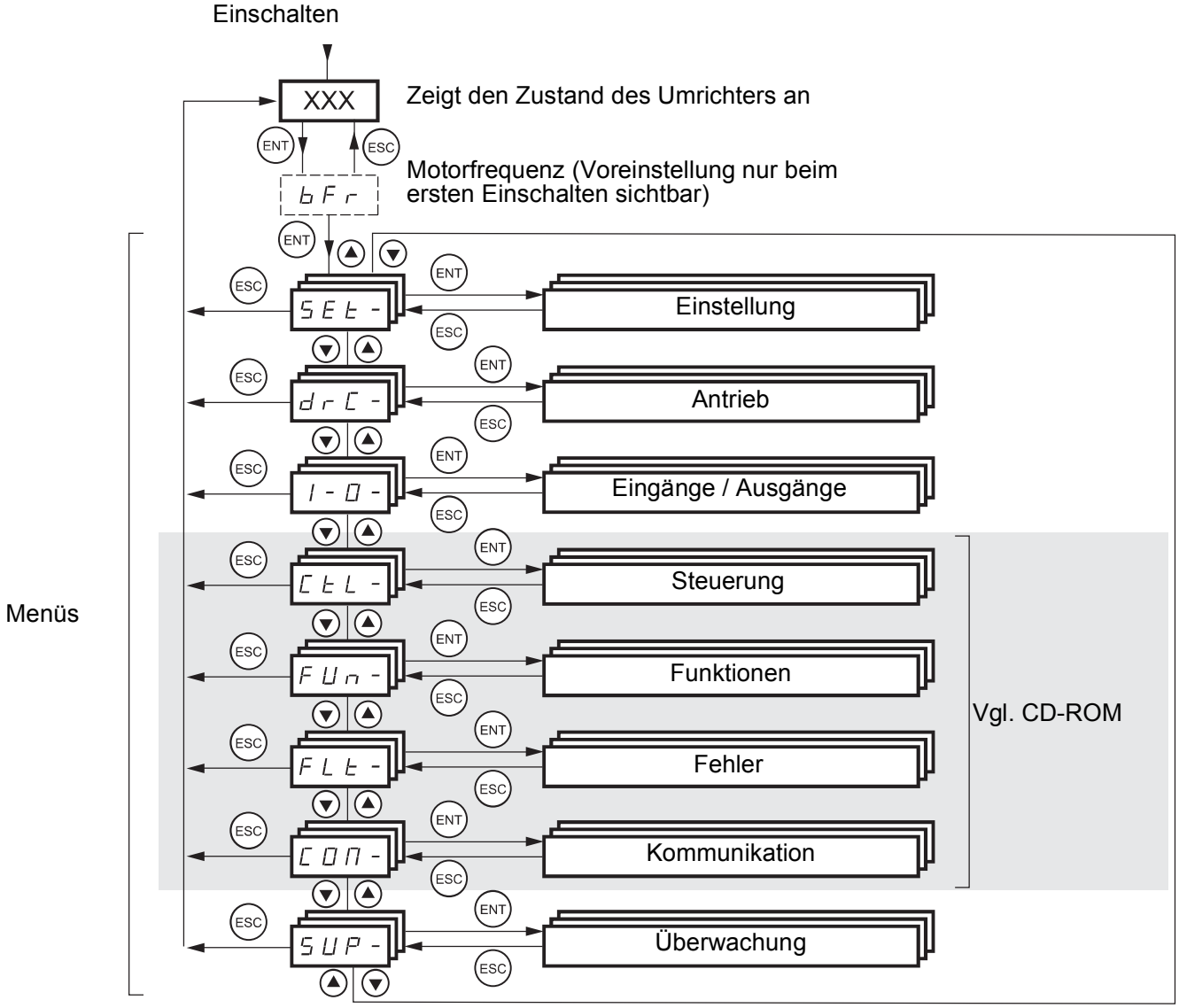

Die Menücodes unterscheiden sich von den Parametercodes durch einen Bindestrich auf der rechten Seite. Beispiel: Menü =SEt-, Parameter = ACC.

Speicherung/Aufzeichnung der angezeigten Auswahl : ENT

Beispiel:

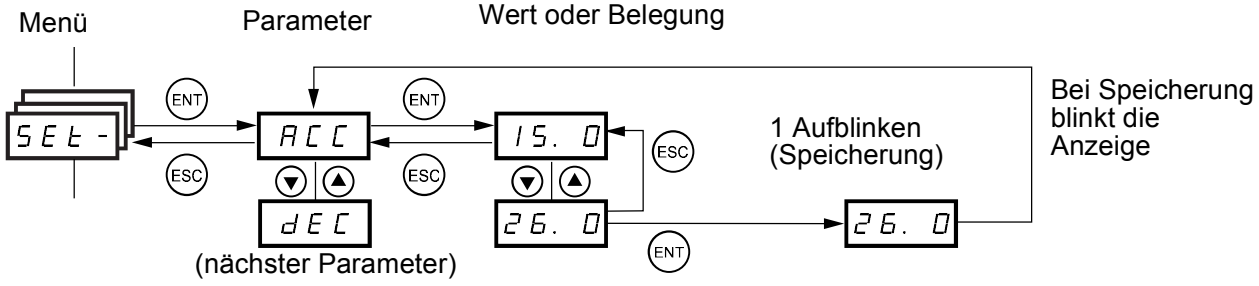

Konfiguration des Parameters bFr

Dieser Parameter kann nur im Stillstand bei verriegeltem Umrichter geändert werden.

Code	Beschreibung	Einstell-bereich	Werksein-stellung
bFr	**Standardfrequenz des Motors**		50
	Dieser Parameter ist hier nur beim ersten Einschalten sichtbar. Im Menü drC- kann er jedoch jederzeit geändert werden. 50 Hz: IEC 60 Hz: NEMA Dieser Parameter ändert die Voreinstellung der Parameter: HSP Seite 40, Ftd Seite 42, FrS Seite 42 und tFr Seite 43.		

Menü „Einstellung“ Set-

Die Einstellparameter können sowohl während des Betriebs als auch im Stillstand geändert werden.

Überprüfen Sie, ob die während des Betriebs vorgenommenen Änderungen gefahrlos sind; Änderungen sollten vorzugsweise im Stillstand erfolgen.

Code	Beschreibung	Einstell-bereich	Werksein-stellung
ACC dEC	**Zeit der Hochlauf- und Auslauframpen**	0,1 bis 999,9 s 0,1 bis 999,9 s	3 s 3 s
	Für den Hoch- und Auslauf im Bereich von 0 bis zur Nennfrequenz FrS definiert (Parameter im Menüs drC-). Stellen Sie sicher, dass der dEC-Wert im Hinblick auf die anzuhaltende Last nicht zu niedrig ist.		
LSP	**Kleine Frequenz**	0 bis HSP	0 Hz
	(Motorfrequenz bei minimalem Sollwert)		
HSP	**Große Frequenz**	LSP bis tFr	bFr
	(Motorfrequenz bei maximalem Sollwert): Stellen Sie sicher, dass die Einstellung mit Motor und Anwendung vereinbar ist.		
ItH	**Thermischer Motorschutz - Maximaler thermischer Strom**	0 bis 1,5 In (1)	Je nach Umrichter
	Stellen Sie ItH auf den Bemessungsbetriebsstrom ein, der auf dem Typenschild angegebenen ist. Angaben zum Löschen des thermischen Schutzes finden Sie auf der CD-ROM.		
UFr	**RI-Kompensation / Boost-Spannung**	0 bis 100%	20%
	Ermöglicht die Optimierung des Drehmoments bei sehr niedriger Drehzahl (UFr erhöhen, falls Drehmoment nicht ausreicht). Stellen Sie sicher, dass der UFr-Wert im Hinblick auf den erhitzten Motor nicht zu hoch liegt (Gefahr der Instabilität). Wenn Sie UFt ändern (Seite 43), wechselt UFr auf die Werkseinstellung (20%).		

(1) In entspricht dem im Katalog und auf dem Typenschild des Umrichters angegebenen Bemessungsbetriebsstrom des Umrichters.

Code	Beschreibung	Einstell-bereich	Werksein-stellung
FLG	**Verstärkung des Frequenzreglers**	1 bis 100%	20
	Parameter nur abrufbar, wenn UFt (Seite 43) = n oder nLd. Mit dem Parameter FLG werden die Werte der Frequenzrampe in Abhängigkeit der Trägheit der Maschine abgeglichen. Zu niedriger Wert: Verlängerung der Ansprechzeit. Zu hoher Wert: Überschwingen der Frequenz, führt zu Instabilität.		
StA	**Stabilität des Frequenzreglers**	1 bis 100%	20
	Parameter nur abrufbar, wenn UFt (Seite 43) = n oder nLd. Zu niedriger Wert: Überschwingen der Frequenz, führt zu Instabilität. Zu hoher Wert: Verlängerung der Ansprechzeit.		
SLP	**Schlupfkompensation**	0 bis 150%	100
	Parameter nur abrufbar, wenn UFt (Seite 43) = n oder nLd. Ermöglicht den Abgleich der durch Eingabe der Motornenndrehzahl festgelegten Schlupfkompensation. Die Geschwindigkeitsangaben auf den Motortypenschildern sind nicht unbedingt exakt. • Ist die eingestellte Schlupffrequenz < als die tatsächliche Schlupffrequenz: läuft der Motor nicht mit der korrekten Drehzahl im stabilen Betrieb. • Ist die eingestellte Schlupffrequenz > als die tatsächliche Schlupffrequenz: ist die Kompensation des Motors zu hoch, und die Drehzahl ist nicht stabil.		
tdC1	**Dauer der automatischen Gleichstromeinspeisung im Stillstand**	0,1 bis 30 s	0,5 s
SdC1	**Höhe der automatischen Gleichstromeinspeisung bei Stillstand**	0 bis 1,2 In (1)	0,7 In (1)
	⚠ Stellen Sie sicher, dass der Motor diesem Strom ohne Überhitzen standhält.		
tdC2	**2. Dauer der automatischen Gleichstromeinspeisung im Stillstand** Vgl. CD-ROM.	0 bis 30 s	0 s
SdC2	**2. Höhe der automatischen Gleichstromeinspeisung bei Stillstand** Vgl. CD-ROM.	0 bis 1,2 In (1)	0,5 In (1)
JPF	**Frequenzausblendung**	0 bis 500	0 Hz
	Verbietet längeren Betrieb über einen Frequenzbereich von ±1 Hz um JPF herum. Mit dieser Funktion können Sie eine kritische Frequenz unterdrücken, die eine Resonanz zur Folge hätte. Die Einstellung auf 0 deaktiviert die Funktion.		
JF2	**2. Frequenzausblendung**	0 bis 500	0 Hz
	Verbietet längeren Betrieb über einen Frequenzbereich von ±1 Hz um JF2 herum. Mit dieser Funktion können Sie eine kritische Frequenz unterdrücken, die eine Resonanz zur Folge hätte. Die Einstellung auf 0 deaktiviert die Funktion.		
SP2	**2. Vorwahlfrequenz**	0,0 bis 500,0 Hz	10 Hz
SP3	**3. Vorwahlfrequenz**	0,0 bis 500,0 Hz	15 Hz
SP4	**4. Vorwahlfrequenz**	0,0 bis 500,0 Hz	20 Hz
CLI	**Strombegrenzung**	0,25 bis 1,5 In (1)	1,5 In (1)
	Ermöglicht die Begrenzung des Drehmoments und die Erhitzung des Motors.		

(1) In entspricht dem im Katalog und auf dem Typenschild des Umrichters angegebenen Bemessungsbetriebsstrom des Umrichters.

Code	Beschreibung	Einstell-bereich	Werksein-stellung
tLS	**Betriebsdauer bei kleiner Frequenz**	0 bis 999,9 s	0 (keine Zeit-begrenzung)
	Nach Betrieb in LSP während der festgelegten Dauer wird automatisch das Anhalten des Motors angefordert. Der Motor läuft wieder an, wenn der Frequenzsollwert über LSP liegt und wenn weiterhin ein Fahrbefehl vorhanden ist. Achtung, der Wert 0 entspricht einer unbegrenzten Zeit.		
Ftd	Nicht verwendet, siehe CD-ROM		
ttd	Nicht verwendet, siehe CD-ROM		
Ctd	Nicht verwendet, siehe CD-ROM		
SdS	Nicht verwendet, siehe CD-ROM		
SFr	**Taktfrequenz**	2,0 bis 16 kHz	4 kHz
	Auf diesen Parameter kann auch im Menü drC- zugegriffen werden.		

Menü „Antrieb“ drC-

Die Parameter können nur bei Stillstand und ohne Fahrbefehl geändert werden. Eine Ausnahme bildet der Parameter tUn, der evtl. das Einschalten des Motors bewirken kann.
Die Optimierung der Antriebsleistungen wird wie folgt erreicht:
- **durch Eingabe der auf dem Motortypenschild angegebenen Werte im Menü Antrieb,**
- **durch Auslösen einer Motormessung (über einen asynchronen Standardmotor).**

Code	Beschreibung	Einstell-bereich	Werksein-stellung
bFr	**Standardfrequenz des Motors**		50
	50 Hz: IEC 60 Hz: NEMA Dieser Parameter ändert die Voreinstellung der Parameter: HSP Seite 40, Ftd Seite 42, FrS Seite 42 und tFr Seite 43.		
UnS	**Vom Typenschild abgelesene Nennspannung des Motors**	Je nach Umrichter	Je nach Umrichter
FrS	**Vom Typenschild abgelesene Nennfrequenz des Motors**	10 bis 500 Hz	50 Hz
	Die Werkseinstellung ist 50 Hz, und wird durch eine Voreinstellung von 60 Hz ersetzt, wenn bFr auf 60 Hz gesetzt wird.		
nCr	**Vom Leistungsschild abgelesener Nennstrom des Motors**	0,25 bis 1,5 In (1)	Je nach Umrichter
nSP	**Vom Typenschild abgelesene Nenndrehzahl des Motors**	0 bis 32760 1/min	Je nach Umrichter
	0 bis 9999 1/min, dann 10.00 bis 32.76 1000/min Wenn auf dem Typenschild nicht die Nenndrehzahl angegeben wird, finden Sie die entsprechenden Angaben auf der CD-ROM.		
COS	**Vom Typenschild abgelesener Leistungsfaktor des Motors**	0,5 bis 1	Je nach Umrichter
rSC	Auf nO lassen oder CD-ROM verwenden.		nO

(1) In entspricht dem im Katalog und auf dem Typenschild des Umrichters angegebenen Bemessungsbetriebsstrom des Umrichters.

Code	Beschreibung	Einstell-bereich	Werksein-stellung
tUn	**Motormessung der Motorsteuerung**		nO
	Es ist unbedingt erforderlich, dass alle Motorparameter (UnS, FrS, nCr, nSP, COS) richtig konfiguriert sind, bevor die Motormessung durchgeführt wird. nO: Motormessung nicht durchgeführt. YES: Die Motormessung wird sobald wie möglich durchgeführt. Der Parameter wechselt dann im Fehlerfall automatisch auf dOnE oder nO (Anzeige der Störung tnF). dOnE: Verwendung der durch die vorherige Motormessung gegebenen Werte. rUn: Die Motormessung erfolgt bei jedem Fahrbefehl. POn: Die Motormessung erfolgt bei jedem Einschalten. L I1 bis L I6: Die Motormessung erfolgt während des Übergangs 0 ➜ 1 eines logischen Eingangs, der dieser Funktion zugeordnet ist. **Achtung**: Die Motormessung wird nur dann durchgeführt, wenn zuvor kein Befehl aktiv ist. Die Motormessung kann 1 bis 2 Sekunden dauern. Unterbrechen Sie nicht und warten Sie ab, dass die Anzeige auf "dOnE" oder "nO" wechselt. ⚠ Während der Motormessung wird der Motor von seinem Nennstrom durchflossen.		
tUS	**Zustand der Motormessung** (Nur zur Information, nicht einstellbar)		tAb
	tAb: Der Standardwert des Statorwiderstands wird verwendet, um den Motor zu steuern. PEnd: Die Motormessung wurde angefordert, aber noch nicht ausgeführt. PrOG: Motormessung läuft. FAIL: Die Motormessung ist fehlgeschlagen. dOnE: Der von der Motormessfunktion gemessene Statorwiderstand wird verwendet, um den Motor zu steuern.		
UFt	**Wahl der U/f-Kennlinie**		n
	L: Konstantes Drehmoment für parallel geschaltete Motoren oder Sondermotoren P: Variables Moment: Pumpen- und Lüfteranwendungen n: Vektorielle Regelung ohne Rückführung (open loop) für Anwendungen mit konstantem Drehmoment nLd: Energiesparmodus für Anwendungen mit variablem Drehmoment ohne hohe dynamische Beanspruchung (Verhalten ähnlich der P-Kennlinie bei Leerlauf und der n-Kennlinie unter Last).		
nrd	**Zufallsgesteuerte Taktfrequenz**		YES
	YES: Frequenz mit zufallsgesteuerter Modulation nO: Feste Frequenz Die zufallsgesteuerte Frequenzmodulation verhindert eventuelle Störgeräusche und Resonanzen, die bei einer festen Frequenz auftreten könnten.		
SFr	**Taktfrequenz** (1)	2,0 bis 16 kHz	4 kHz
	Die Frequenz kann so eingestellt werden, dass der vom Motor erzeugte Geräuschpegel gesenkt wird. Ist die Frequenz auf mehr als 4 kHz eingestellt, reduziert der Umrichter automatisch die Taktfrequenz und stellt sie wieder her, wenn die Temperatur wieder normal ist.		
tFr	**Maximale Ausgangsfrequenz**	10 bis 500 Hz	60 Hz
	Die Werkseinstellung beträgt 60 Hz, und wird durch eine Voreinstellung von 72 Hz ersetzt, wenn bFr auf 60 Hz gesetzt wird.		
SSL	**Löschen des Filters für die Drehzahlregelung**		nO
	nO: Der Filter für die Drehzahlregelung bleibt aktiv (verhindert Sollwertüberschreitungen). YES: Der Filter für die Drehzahlregelung wird gelöscht (führt bei Anwendungen mit Positionierung zu einer verkürzten Ansprechzeit mit möglicher Sollwertüberschreitung).		

(1) Der Zugriff auf diesen Parameter ist auch über das Menü SEt- möglich.

Code	Beschreibung	Einstell-bereich	Werksein-stellung
SCS	**Speichern der Konfiguration** (1)		nO
	nO: Funktion inaktiv Str I: Speichert die laufende Konfiguration (mit Ausnahme des Ergebnisses der Motormessung) im EEPROM-Speicher. SCS stellt sich automatisch auf nO zurück, sobald das Speichern erfolgt ist. Mit dieser Funktion kann zusätzlich zur aktuellen Konfiguration eine Konfiguration in Reserve gehalten werden. Bei Verlassen des Werks sind die aktuelle und die gesicherte Konfiguration der Umrichter auf die Werkskonfiguration eingestellt.		
FCS	**Rückkehr zur Werkseinstellung / Aufruf der Konfiguration** (1)		nO
	nO: Funktion inaktiv rECI: Die zuvor über SCS = StrI gesicherte Konfiguration wird zur aktuellen Konfiguration. rECI ist nur dann sichtbar, wenn bereits eine Sicherung erfolgt ist. FCS wechselt automatisch zurück auf nO, sobald diese Aktion erfolgt ist. InI: Die Werkseinstellung wird zur aktuellen Konfiguration. FCS wechselt automatisch zurück auf nO, sobald diese Aktion erfolgt ist. ⚠ Zur Berücksichtigung von rECI und InI muss die Taste ENT länger (2 s) gedrückt werden.		

(1) Auf SCS und FCS kann von verschiedenen Konfigurationsmenüs aus zugegriffen werden, sie beziehen sich jedoch auf alle Menüs und Parameter.

Menü „Eingänge/Ausgänge“ I-O-

Die Parameter sind nur im Stillstand, ohne Fahrbefehl veränderbar.

Code	Beschreibung	Werksein-stellung
tCC	**2-Draht-/3-Draht-Steuerung (Art der Steuerung)**	2C ATV31●●●A: LOC
	Konfiguration der Steuerung: 2C = 2-Draht-Steuerung 3C = 3-Draht-Steuerung LOC = lokale Steuerung (RUN / STOP / RESET des Umrichters) nur für ATV31●●●A. 2-Draht-Steuerung: Das Ein- oder Ausschalten wird über den geöffneten oder geschlossenen Zustand des Eingangs gesteuert. 3-Draht-Steuerung (Flankengesteuert): Ein Impuls „Rechtslauf“ oder „Linkslauf“ reicht aus, um das Anlaufen des Motors zu steuern; ein Impuls „Stopp“ reicht aus, um das Anhalten des Motors zu steuern. Vgl. CD-ROM. Bei ATV31●●●A werden durch Neukonfiguration von tCC = 2C die Eingänge LI1 (Rechtslauf) und LI2 (Linkslauf) neu zugeordnet. Die RUN-Taste des Umrichters wird folglich nicht aktiv, der Frequenzsollwert wird jedoch weiterhin vom Potentiometer angegeben. Sie können das Potentiometer deaktivieren und dem Analogeingang AI1 den Frequenzsollwert zuweisen, indem Sie den Parameter Fr1 = AI1 im Menü CtL- konfigurieren. Vgl. CD-ROM. ⚠ Zum Ändern der Belegung von tCC muss länger (2 s) auf die Taste „ENT“ gedrückt werden. Hierdurch werden folgende Funktionen auf die Werkseinstellung zurückgesetzt: rrS, tCt und alle Funktionen, die Logikeingängen zugeordnet sind.	

Code	Beschreibung	Werksein-stellung
tCt	**Art der 2-Draht-Steuerung** (Parameter nur zugänglich, wenn tCC = 2C)	trn
	LEL: Logisch 0 oder 1 wird für den Fahrbefehl wie auch das Anhalten verwendet. trn: Für den Fahrbefehl ist ein Zustandswechsel (Übergang oder Flanke) erforderlich, dadurch lässt sich ein unbeabsichtigter Wiederanlauf nach einer Unterbrechung der Spannungsversorgung vermeiden. PFO: Der Fahrbefehl oder das Anhalten werden durch die Zustände „logisch 0 oder 1“ gesteuert. Der Eingang „Rechtslauf“ hat jedoch immer den Vorrang gegenüber dem Eingang „Linkslauf“.	
rrS	**Linkslauf durch Logikeingang**	wenn tCC = 2C: LI2 wenn tCC = 3C: LI3 wenn tCC = LOC: nO
	Wenn rrS = nO bleibt der Linkslauf aktiv, beispielsweise durch negative Spannung an AI2. nO: Nicht belegt LI2: Logikeingang LI2 zugänglich, wenn tCC = 2C LI3: Logikeingang LI3 LI4: Logikeingang LI4 LI5: Logikeingang LI5 LI6: Logikeingang LI6	
CrL3 CrH3 AOIt dO r1 r2	Weitere Informationen finden Sie auf der CD-ROM.	
SCS FCS	Identisch mit dem Menü drC-, Seite 44	

Menü „Überwachung“ SUP-

Die Parameter können sowohl während des Betriebs als auch im Stillstand geändert werden.

Einige Funktionen enthalten zahlreiche Parameter. Zur Verdeutlichung der Programmierung, und um ein langwieriges Durchsuchen der Parameter zu vermeiden, wurden diese Funktionen in Untermenüs aufgegliedert. Sie erkennen die Untermenüs am Bindstrich rechts des Codes, wie beispielsweise das Menü: LIF- .

Wenn der Umrichter in Betrieb ist, entspricht der angezeigte Wert dem Wert eines der Überwachungsparameter. Standardgemäß ist der angezeigte Wert die auf den Motor einwirkende Ausgangsfrequenz (Parameter rFr).

Während der Anzeige des Wertes des neuen, gewünschten Überwachungsparameters muss die Taste "ENT" ein zweites Mal 2 Sekunden lang gedrückt werden, um die Änderung des Überwachungsparameters freizugeben und diesen zu speichern. Daraufhin wird der Wert dieses Parameters während des Betriebs angezeigt (selbst nach dem Abschalten).
Wenn Sie die neue Auswahl nicht durch ein zweites längeres Drücken von "ENT" bestätigen, wechselt der Parameter nach dem Abschalten zum vorherigen Parameter zurück.

Code	Beschreibung	Änderungsbereich
LFr	**Frequenzsollwert für eine Steuerung durch das interne oder das externe Bedienterminal**	0 bis 500 Hz
rPI	**Interner PI-Sollwert**	0 bis 100%

Diese Parameter erscheinen nur, wenn die Funktion bestätigt wurde.

Code	Beschreibung	Änderungsbereich
FrH	**Frequenzsollwert vor Rampe** (Absolutwert)	0 bis 500 Hz
rFr	**Auf den Motor wirkende Ausgangsfrequenz**	-500 Hz bis +500 Hz
SPd	**Ausgangsfrequenz in Kundeneinheiten**	
	Vgl. CD-ROM.	
LCr	**Motorstrom**	
OPr	**Motorleistung**	
	100% = Nennleistung des Motors	
ULn	**Netzspannung** (gibt die Netzspannung über den DC-Bus an, bei Betrieb des Motors oder bei Stillstand)	
tHr	**Thermischer Zustand des Motors**	
	100% = Thermischer Nennzustand 118% = Schwellwert "OLF" (Motorüberlast)	
tHd	**Thermischer Zustand des Umrichters**	
	100% = Thermischer Nennzustand 118% = Schwellwert "OHF" (Motorüberlast)	
LFt	**Letzte aufgetretene Störung**	
	Siehe Fehler – Ursachen – Fehlerbeseitigung, Seite 47	
Otr	**Drehmoment des Motors**	
	100% = Nennmoment des Motors	
rtH	**Betriebsdauer**	0 bis 65530 Stunden
	Kumulierte Einschaltdauer des Motors: von 0 bis 9999 (Stunden), dann 10.00 bis 65.53 (1000 Stunden). Kann über den Parameter rPr des Menüs FLt- auf Null gesetzt werden (vgl. CD-ROM).	
COd	**Zugriffscode des Terminals**	
	Vgl. CD-ROM	
tUS	**Zustand der Motormessung**	
	tAb: Der Standardwert des Statorwiderstands wird verwendet, um den Motor zu steuern. PEnd: Die Motormessung wurde angefordert, aber noch nicht ausgeführt. PrOG: Die Motormessung läuft. FAIL: Die Motormessung ist fehlgeschlagen. dOnE: Die Antriebsverwaltung verwendet den mit der Motormessfunktion gemessenen Statorwiderstand.	
UdP	**Anzeige der ATV31-Softwareversion**	
	Beispiel: 1102 = V1.1 IE02.	
LIA-	**Funktionen der Logikeingänge**	
	Vgl. CD-ROM.	
AIA-	**Funktionen der Analogeingänge**	
	Vgl. CD-ROM.	

Fehler - Ursachen - Behebung

Unterstützung bei der Wartung, Anzeige von Störmeldungen

Bei einer Störung während der Inbetriebnahme oder beim Betrieb muss zuerst sichergestellt werden, dass die Anweisungen bezüglich der Umgebung, des Einbaus und der Anschlüsse befolgt wurden.

Der erste festgestellte Fehler wird gespeichert und durch Blinken auf dem Display angezeigt: der Umrichter wird gesperrt, und der Kontakt des Störmelderelais (R1A - R1C oder R2A – R2C) fällt ab.

Betriebsstörung ohne Fehleranzeige

- Erscheint keine Anzeige, überprüfen Sie, ob die Versorgung des Umrichters korrekt ist.
- Andere Fälle: Weitere Informationen finden Sie auf der CD-ROM.

Fehler, bei denen kein automatischer Wiederanlauf erfolgt

Vor dem Wiederanlauf muss erst die Störungsursache beseitigt werden. Hierzu ist der Umrichter auszuschalten (die Anzeige muss erlöschen) und dann wiedereinzuschalten.

Fehler	Wahrscheinliche Ursache	Maßnahmen zur Behebung
COF CANopen-Fehler	• Kommunikationsunterbrechung am CANopen-Bus	• Den Kommunikationsbus überprüfen. • Vgl. spezifische Dokumentation.
CrF Ladeschaltung Kondensatoren	• Störung der Steuerung des Lastrelais oder Lastwiderstand beschädigt	• Den Umrichter ersetzen
EEF EEPROM-Fehler	• Störung des internen Speichers	• Umgebung prüfen (elektromagnetische Verträglichkeit). • Den Umrichter ersetzen.
InF Interne Störung	• Interne Störung	• Umgebung prüfen (elektromagnetische Verträglichkeit) • Den Umrichter ersetzen
LFF Verlust 4-20 mA	• Verlust des Sollwerts 4-20mA am Eingang AI3	• Die Verbindung an Eingang AI3 überprüfen.
ObF Überspannung bei Auslauf	• Zu starke Bremsung • Antreibende Last	• Auslaufzeit erhöhen. • Bei Bedarf einen Bremswiderstand einbauen. • Siehe Funktion brA (vgl. CD-ROM).
OCF Überstrom	• Parameter der Menüs SEt- und drC- nicht korrekt • Massenträgheit oder Last zu hoch • Mechanische Blockierung	• Parameter von SEt- und drC- überprüfen • Dimensionierung von Motor/Umrichter/Last überprüfen • Zustand der Mechanik überprüfen
OHF Überlast des Umrichters	• Überhitzung des Umrichters	• Motorlast, Belüftung des Umrichters und Umgebung überprüfen. Vor dem Wiedereinschalten den Motor abkühlen lassen.
OLF Überlast Motor	• Auslösung durch zu hohen Motorstrom	• Einstellung ItH (Seite 40) des Motorthermoschutzes und die Motorlast überprüfen Vor dem Wiedereinschalten den Motor abkühlen lassen.

Fehler	Wahrscheinliche Ursache	Maßnahmen zur Behebung
OPF Ausfall Motorphase	• Unterbrechung einer Phase am Umrichterausgang • Motorschütz geöffnet • Motor nicht angeschlossen oder zu geringe Leistung • Plötzlich auftretende Motorstromverstimmungen	• Anschlüsse zwischen Umrichter und Motor überprüfen. • Wird ein Motorschütz verwendet, OPL auf OAC einstellen (vgl. CD-ROM, Menü FLt-). • Test mit einem Motor mit geringer Leistung oder ohne Motor: OPL auf nO einstellen (vgl. CD-ROM, Menü FLt-). • Parameter UFr (Seite 40), UnS und nCr (Seite 42) überprüfen und optimieren, und eine Motormessung über tUn ausführen (Seite 43).
OSF Überspannung	• Netzspannung zu hoch • Störung im Netz	• Netzspannung überprüfen
PHF Verlust Netzphase	• Ausfall einer Phase • Verwendung eines dreiphasigen ATV 31 in einem einphasigen Netz • Last mit Unwucht Diese Schutzfunktion wirkt nur unter Last.	• Überprüfen Sie den Anschluss und die Sicherungen. • Ein dreiphasiges Netz verwenden. • Den Fehler über IPL = nO sperren (vgl. CD-ROM)
SCF Kurzschluss im Motor	• Kurzschluss oder Erdschluss am Umrichterausgang • Starker Kriechstrom gegen Erde am Umrichterausgang bei Parallel-anschluss mehrerer Motoren.	• Anschlusskabel vom Umrichter zum Motor und die Isolierung des Motors überprüfen. • Taktfrequenz herabsetzen. • Drosseln in Reihenschaltung zum Motor hinzufügen.
SLF Modbus-Fehler	• Kommunikationsunterbrechung am Modbus-Bus	• Den Kommunikationsbus überprüfen. • Vgl. spezifische Dokumentation.
SOF Überdrehzahl	• Instabilität • Zu stark antreibende Last	• Überprüfen Sie die Parameter von Motor, Verstärkung und Stabilität. • Fügen Sie einen Bremswiderstand hinzu. • Dimensionierung von Motor/Umrichter/Last prüfen.
tnF Fehler Motormessung	• Sondermotor oder Leistungsmotor ist nicht auf den Umrichter abgestimmt • Motor ist nicht an den Umrichter angeschlossen	• Kennlinie L oder P verwenden (UFt, Seite 43). • Prüfen, ob Motor bei der Motormessung erkannt wird. • Bei Verwendung eines nachgeschalteten Motorschützes diesen während der Vermessung schließen.

Störungen, bei denen nach Beseitigung der Ursache ein Wiederanlauf erfolgt

Fehler	Wahrscheinliche Ursache	Maßnahmen zur Behebung
CFF Konfigurationsfehler	• Die aktuelle Konfiguration ist inkonsistent.	• Zu den Werkseinstellungen zurückkehren oder die gesicherte Konfiguration aufrufen, falls diese verwendbar ist. Vgl. Parameter FCS des Menüs drC-, Seite 44.
CFI Konfigurationsfehler durch serielle Schnittstelle	• Ungültige Konfiguration (die über die serielle Schnittstelle im Umrichter eingelesene Konfiguration ist inkonsistent)	• Die zuvor eingelesene Konfiguration überprüfen. • Eine konsistente Konfiguration laden.
USF Unterspannung	• Netzspannung zu niedrig • Vorübergehender Spannungsabfall • Lastwiderstand beschädigt	• Die Netzspannung und den Parameter „Netzspannung“ überprüfen. • Den Umrichter ersetzen.

Contenido

Recomendaciones preliminares _____ 50
Etapas de la instalación _____ 51
Configuración de fábrica _____ 52
Sustitución de un ATV 28 por un ATV 31 _____ 52
Compatibilidad electromagnética _____ 53
Funciones del display y de las teclas _____ 54
Acceso a los menús _____ 55
Configuración del parámetro bFr _____ 56
Menú Ajustes SEt- _____ 56
Menú de control del motor drC- _____ 58
Menú Entradas/Salidas I-O- _____ 60
Menú de supervisión SUP- _____ 61
Fallos - causas - soluciones _____ 63

En explotación, el motor se puede detener al suprimir las órdenes de marcha o de la consigna de velocidad, téngase en cuenta que el variador permanece en tensión. Si la seguridad del personal exige la prohibición de cualquier arranque inesperado, este bloqueo electrónico se hace insuficiente: *Prevea una interrupción del circuito de potencia.*

El variador incluye dispositivos de seguridad que pueden, en caso de que se produzcan fallos, controlar la parada del variador y la parada del motor. Sin embargo este motor puede sufrir una parada también debido a un bloqueo mecánico, variaciones de tensión o interrupciones en la alimentación.
Téngase en cuenta que la desaparición de las causas de las paradas puede provocar un rearranque que suponga un riesgo para determinadas máquinas o instalaciones, especialmente para las que deben ser conformes a las normas relativas a la seguridad.

Es importante, por tanto, para estos casos, que el usuario se proteja contra dichas posibilidades de rearranque con la ayuda de un detector de baja velocidad que provoque, en caso de parada no programada del motor, la interrupción de la alimentación del variador.

La instalación y la puesta en marcha de este variador deben efectuarse según las normas internacionales IEC y las normas nacionales locales. Su cumplimiento es responsabilidad del integrador, que si se encuentra en la comunidad europea, debe respetar, entre otras normas, la directiva CEM.
El respeto de estas normas fundamentales de la directiva CEM viene condicionado especialmente por la aplicación de las prescripciones que contiene el presente documento.

El Altivar 31 debe considerarse como un componente, no se trata de una máquina ni de un aparato preparado para el uso según las directivas europeas (directiva sobre máquinas y directiva sobre compatibilidad electromagnética). Garantizar la conformidad de la máquina con dichas directivas es responsabilidad del cliente final.

El variador no debe utilizarse como componente de seguridad para las máquinas que presenten un riesgo material o humano (aparatos de elevación, por ejemplo). En tales casos, la supervisión de la sobrevelocidad o de pérdida de control de la trayectoria debe estar asegurada por componentes diferentes e independientes del variador.

Los productos y materiales que se presentan en este documento son susceptibles de sufrir cambios o modificaciones tanto en el aspecto técnico como en el de utilización. La descripción de los mismos no puede, bajo ningún concepto, revestir un carácter contractual.

Recomendaciones preliminares

Esta guía simplificada describe la puesta en servicio mínima para la configuración de fábrica del variador.

Todas las funciones, parámetros y fallos descritos en este documento se refieren a la configuración de fábrica. Si esta configuración es modificada con alguno de los menús CtL-, FUn- o FLt-, los resultados pueden ser diferentes.
El CD-ROM suministrado con el variador incluye una descripción completa de las recomendaciones y de todos los menús de configuración.

Antes de poner el variador en tensión y configurarlo

- **Compruebe que la tensión de red es compatible con el rango de tensión de alimentación del variador. Existe el riesgo de destrucción si no se respeta la tensión de la red.**
- **Deje las entradas lógicas sin tensión (estado 0) para evitar que el variador arranque inesperadamente. Por defecto, al salir de los menús de configuración, toda entrada asignada a una orden de marcha provocaría el arranque inmediato del motor.**

Ajuste de usuario y ampliación de las funciones

En caso necesario, el display y los botones permiten modificar los ajustes y ampliar las funciones. El parámetro FCS del menú drC- hace posible el **retorno al ajuste de fábrica**.
Hay tres tipos de parámetros:
- visualización: valores que muestra el variador,
- ajustes: modificables tanto en funcionamiento como cuando está parado,
- configuración: modificables únicamente cuando está parado y no está frenando. Pueden visualizarse en funcionamiento.

- **Asegúrese de que los cambios de ajustes durante el funcionamiento no comportan riesgo. Es preferible efectuarlos cuando el variador está parado.**

Arranque

Importante: (con el ajuste de fábrica) Cuando se produce una puesta en tensión o una reinicialización de fallo bien manual, o bien tras una orden de parada, sólo arrancará el motor una vez que se han reiniciado las órdenes "adelante" y "atrás". Por defecto, el display muestra el mensaje "nst", pero el variador no arranca.

Prueba en motor de baja potencia o sin motor

Con el ajuste de fábrica, la detección de pérdida de fase del motor está activada. Para comprobar el variador en un entorno de prueba o de mantenimiento, y sin tener que recurrir a un motor equivalente al calibre del variador (en particular para los variadores de grandes potencias), desactive la detección de fase del motor y configure la ley tensión/frecuencia UFt = L (consulte el CD-ROM).

Uso en una red IT

Red IT: Neutro aislado o impedante.
Utilice un dispositivo de control de aislamiento compatible con cargas no lineales: por ejemplo, del tipo XM200 de la marca Merlin Gerin.
Los ATV 31●●●M2 y N4 incluyen filtros RFI integrados. Para el uso en redes IT, es necesario desconectar estos filtros.
Consulte el CD-ROM suministrado con el variador.

Etapas de la instalación

1 - Recepción del variador

- Asegúrese de que la referencia del variador que aparece inscrita en la etiqueta pertenece a la factura de entrega correspondiente a la orden de pedido.
- Abra el embalaje y compruebe que el Altivar 31 no ha sufrido daños durante el transporte.

2 - Compruebe que la tensión de la red es compatible con el rango de alimentación del variador (véase la placa de características del variador)

- Existe el riesgo de destrucción del variador si no se respeta la tensión de la red

3 - Fije el variador

4 - Conecte al variador:

- la red de alimentación, asegurándose de que:
  - **se encuentra en el rango de tensión del variador.**
  - **está sin tensión.**
- el motor, asegurándose de que la conexión de motor corresponde a la tensión de la red,
- el mando, a través de las entradas lógicas,
- la consigna de velocidad, a través de las entradas lógicas o analógicas.

5 - Ponga en tensión el variador sin dar la orden de marcha

6 - Configure:

La frecuencia nominal (bFr) del motor en caso de que no sea de 50 Hz.

7 - Configure en el menú drC-:

Los parámetros del motor, si la configuración de fábrica del variador no es adecuada.

8 - Configure en el menú I-O-:

Si la configuración de fábrica del variador no es la adecuada se puede configurar el modo de control: 3 hilos o 2 hilos por transición, 2 hilos por nivel, 2 hilos por nivel con prioridad de giro adelante, o bien control local para la gama ATV31●●●A.

Es necesario comprobar que las funciones programadas son compatibles con el esquema de cableado utilizado.

9 - Ajuste en el menú SEt-:

- los parámetros ACC (Aceleración) y dEC (Deceleración),
- los parámetros LSP (Mínima velocidad cuando la consigna es nula) y HSP (Máxima velocidad cuando la consigna es máxima),
- el parámetro ItH (Protección térmica del motor).

10 - Arranque

Consejos prácticos

- **El retorno a los ajustes de fábrica** siempre es posible con el parámetro FCS (especifique FCS = InI), en los menús drC- (página 60) o I-O- (página 61).
- El autoajuste, que se efectúa con el parámetro tUn del menú drC- (página 59), permite obtener rendimientos óptimos en precisión y en tiempo de respuesta.

Configuración de fábrica

El Altivar 31 se entrega preajustado de fábrica para las condiciones de uso más habituales:
- Visualización: variador listo (rdY) con el motor parado y frecuencia del motor en marcha.
- Frecuencia del motor (bFr): 50 Hz.
- Aplicación de par constante, control vectorial de flujo sin captador (UFt = n).
- Modo de paro normal en rampa de deceleración.
- Modo de paro por fallo: rueda libre
- Rampas lineales (ACC, dEC): 3 segundos.
- Mínima velocidad (LSP): 0 Hz.
- Máxima velocidad (HSP): 50 Hz.
- Corriente térmica del motor (ItH) = corriente nominal del motor (valor según el calibre del variador).
- Corriente de frenado por inyección en la parada (SdC1) = 0,7 x corriente nominal del variador, durante 0,5 segundos.
- Adaptación automática de la rampa de deceleración cuando hay sobretensión en el frenado.
- Sin rearranque automático después de un fallo.
- Frecuencia de corte 4 kHz.
- Entradas lógicas:
  - LI1, LI2 (2 sentidos de marcha): control 2 hilos por transición, LI1 = marcha adelante, LI2 = marcha atrás, inactivas en los ATV 31●●●●●●A (no asignadas).
  - LI3, LI4: 4 velocidades preseleccionadas (velocidad 1 = consigna de velocidad o LSP, velocidad 2 = 10 Hz, velocidad 3 = 15 Hz, velocidad 4 = 20 Hz).
  - LI5 - LI6: inactivas (no asignadas).
- Entradas analógicas:
  - AI1: consigna de velocidad 0-10 V, inactiva en los ATV 31●●●●●●A (no asignada).
  - AI2: consigna sumatoria de velocidad 0±10 V.
  - AI3: 4-20 mA inactiva (no asignada).
- Relé R1: el contacto se abre en caso de fallo (o si el variador está sin tensión)
- Relé R2: inactivo (no asignado).
- Salida analógica AOC: 0-20 mA, inactiva (no asignada).

Gama ATV 31●●●●●●A

Los ATV 31●●●●●●A con ajustes de fábrica se suministran con el control local activado: los botones RUN y STOP y el potenciómetro del variador están activos. Las entradas lógicas LI1 y LI2, así como la entrada analógica AI1, están inactivas (no asignadas).

En caso de que los valores mencionados sean compatibles con la aplicación, puede utilizarse el variador sin modificar los ajustes.

Sustitución de un ATV 28 por un ATV 31

La siguiente tabla indica la correspondencia de las bornas de control entre los dos modelos de variadores.

Bornas de control ATV 28	Función en ajuste de fábrica	Bornas de control ATV 31	Función en ajuste de fábrica
R1A - R1B - R1C	Relé de fallo	R1A - R1B - R1C	Relé de fallo
R2A - R2C	Consigna de velocidad alcanzada	R2A - R2C	No asignada
COM	0 V	COM	0 V
AI1 (0 -10 V)	Consigna velocidad	AI1 (0 -10 V)	Consigna velocidad
+10 V	+10 V	10 V	+10 V
AI2 (0 -10 V)	Consigna sumatoria de velocidad	AI2 (0 - ± 10 V)	Consigna sumatoria de velocidad
AIC (X - Y mA)	No asignada	AI3 (X - Y mA)	No asignada
AO	Frecuencia del motor	AOC/AOV	No asignada
LI1 - LI2	Marcha adelante/atrás	LI1 - LI2	Marcha adelante/atrás
LI3 - LI4	Velocidades preseleccionadas	LI3 - LI4	Velocidades preseleccionadas
+24 V	+24 V	24 V	+24 V

Compatibilidad electromagnética

Principio

- Equipotencialidad de "alta frecuencia" de las masas entre el variador, el motor y las pantallas de los cables.
- Uso de cables apantallados con pantalla conectada a tierra, en todo su perímetro, en los dos extremos de los cables del motor **6**, la resistencia de frenado eventual **8** y el control/mando **7**. En parte del recorrido, dicha pantalla se puede realizar con tubos o con conductos metálicos con la condición de que no se produzcan discontinuidades. En caso de borneros intermedios, éstos deben estar en una caja metálica apantallada CEM.
- Aleje el cable de alimentación (red) del cable del motor tanto como sea posible.

Plano de instalación (ejemplo)

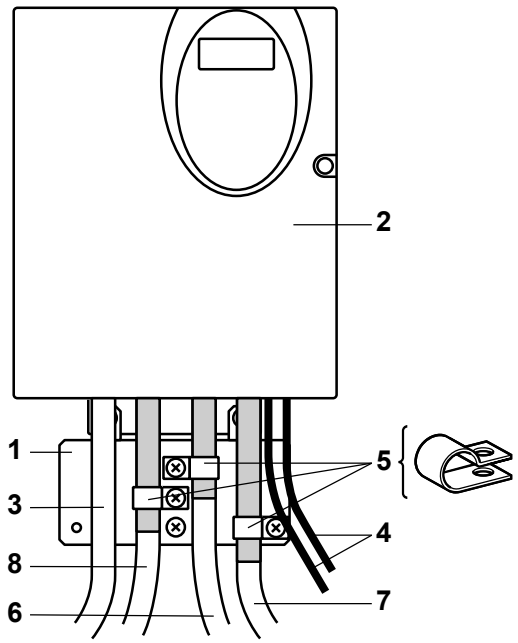

1 Plano de tierra en chapa incluido con el variador; para montarlo sobre éste según muestra el dibujo.

2 Altivar 31

3 Hilos o cable de alimentación no apantallados.

4 Hilos no apantallados para la salida de los contactos de los relés.

5 Fijación y conexión a tierra de las pantallas de los cables 6, 7 y 8 lo más cerca posible del variador:
- pele las pantallas,
- utilice abrazaderas metálicas inoxidables de un tamaño adecuado sobre las partes peladas de las pantallas para la fijación a la chapa 1.
Las pantallas deben estar lo suficientemente apretadas a la chapa para que los contactos sean correctos.

6 Cable apantallado para la conexión del motor. Para los variadores de 0,18 a 1,5 kW, si la frecuencia de corte es superior a 12 kHz, utilice cables de baja capacidad: 130 pF (picoFarad) máx. por metro.

7 Cable apantallado para conectar el control/mando. Cuando sean necesarios muchos conductores, utilice los de pequeña sección (0,5 mm^2).

8 Cable apantallado para conectar la resistencia de frenado eventual.

Nota:
- Si se utiliza un filtro de entrada adicional, éste se monta en el variador y se conecta directamente a la red mediante un cable no apantallado. La conexión 3 al variador se realiza entonces mediante el cable de salida del filtro.
- Aunque se realice la conexión equipotencial HF de las masas entre el variador, el motor y las pantallas de los cables es necesario conectar los conductores de protección PE (verde-amarillo) a los bornes previstos a tal efecto sobre cada uno de los aparatos.

Funciones del display y de las teclas

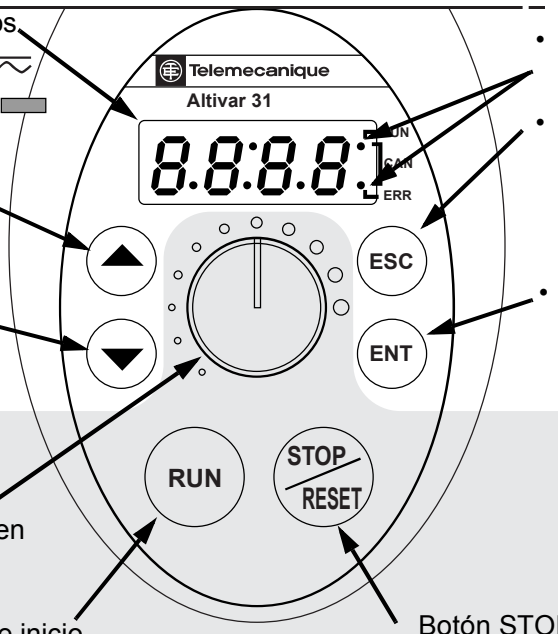

- 4 visualizadores de 7 segmentos
- LED rojo "bus CC en tensión"
- Para pasar al menú o al parámetro previo o para aumentar el valor mostrado
- Para pasar al menú o al parámetro siguiente o para disminuir el valor mostrado
- 2 indicadores de estado CANopen
- Para salir de un menú o de un parámetro o para desechar el valor mostrado y volver al valor anterior grabado en la memoria
- "Para entrar en un menú o en un parámetro o para registrar el parámetro o el valor mostrado

Sólo para ATV 31●●●●●●A

- Potenciómetro de consigna, activo si el parámetro Fr1 del menú CtL- está configurado en AIP
- Botón RUN: controla la orden de inicio de rotación del motor en el giro adelante si el parámetro tCC del menú I-O se ha configurado en LOC.

Botón STOP/RESET:
- Permite reinicializar los fallos.
- Siempre puede controlar la parada del motor.
  - Si tCC (menú I-O) no está configurado en LOC, la parada se realiza en rueda libre.
  - Si tCC (menú I-O) está configurado en LOC, la parada se realiza en rampa, pero si el frenado por inyección está en curso, se realiza en rueda libre.

• Al pulsar el botón ▲ o ▼ no se graba en memoria el valor elegido.

• Si se pulsa de forma continua (>2 s) ▲ o ▼, se obtiene un desplazamiento rápido.

Grabación en memoria y registro de los valores mostrados: ENT

Al grabar un valor en la memoria, el display parpadea.

Visualización normal si no hay fallos y no está en puesta en servicio:
- 43.0: Visualización del parámetro seleccionado en el menú SUP- (por defecto: frecuencia motor). En caso de limitación de la corriente, el parámetro visualizado parpadea.
- init: Secuencia de inicialización.
- rdY: Variador listo.
- dcb: Frenado por inyección de corriente continua en curso.
- nSt: Parada en rueda libre.
- FSt: Parada rápida.
- tUn: Autoajuste en curso.

En caso de fallo, el código de fallo aparece parpadeando.

Opción terminal remoto
Consulte el CD-ROM.

Acceso a los menús

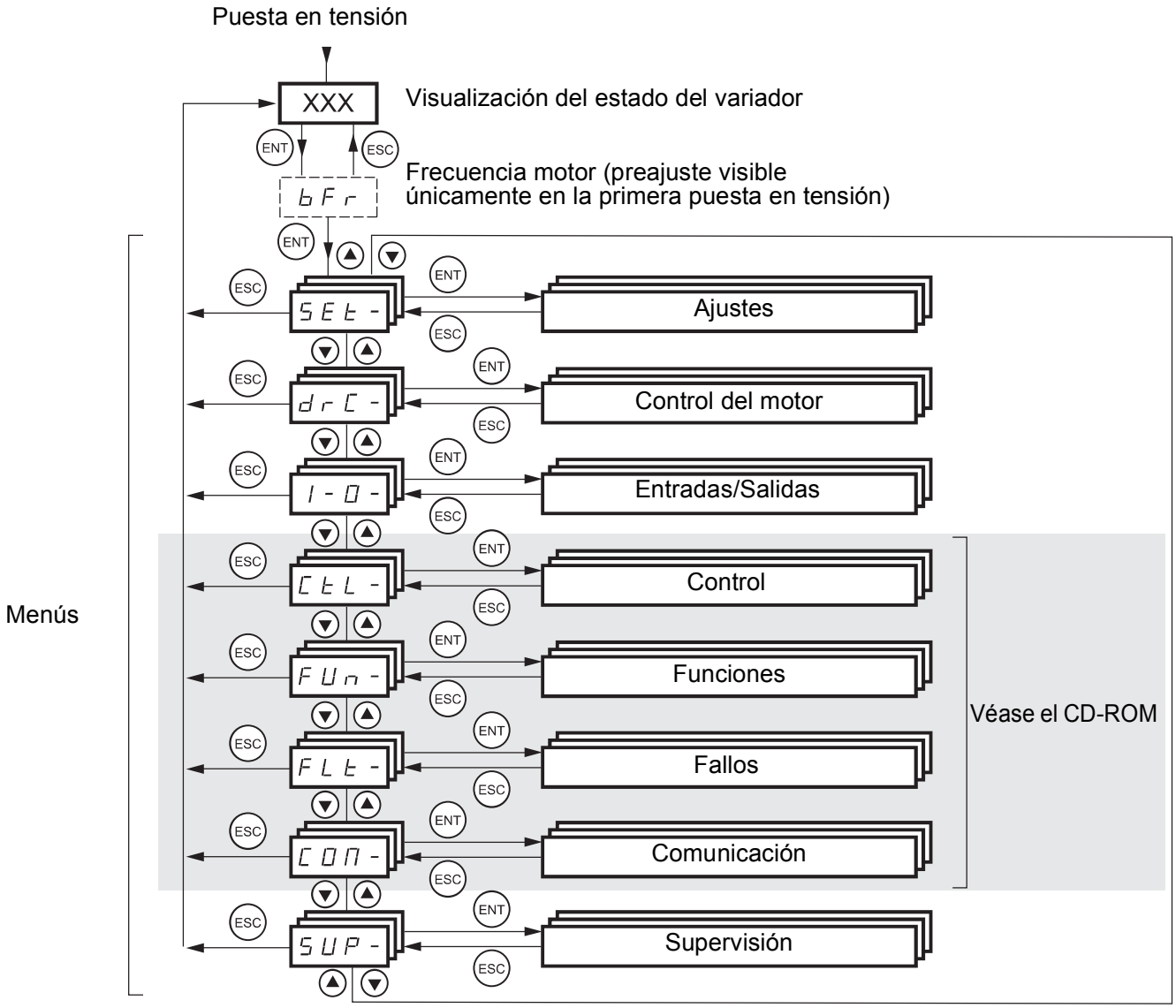

Los códigos de los menús se diferencian de los códigos de los parámetros por un guión a la derecha.
Ejemplo: menú SEt-, parámetro ACC.

Grabación en memoria y registro de los valores mostrados: ENT

Ejemplo:

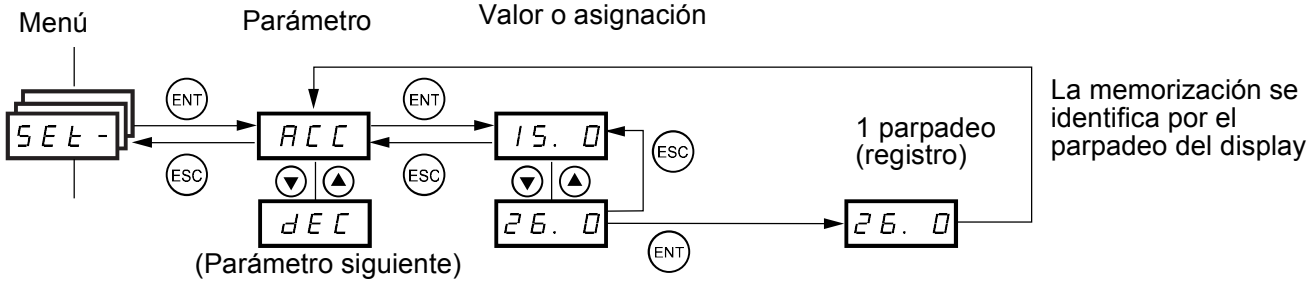

ESPAÑOL

Configuración del parámetro bFr

Este parámetro sólo puede modificarse con el variador en parado.

Cód.	Descripción	Rango de ajuste	Ajuste de fábrica
bFr	**Frecuencia estándar de motor**		50
	Este parámetro sólo aparece en este menú en la primera puesta en tensión. Siempre se puede modificar en el menú drC-. 50 Hz: IEC 60 Hz: NEMA Este parámetro modifica los preajustes de los parámetros: HSP (página 56), Ftd (página 58), FrS (página 58) y tFr (página 59).		

Menú Ajustes SEt-

Los parámetros de ajuste se pueden modificar con el motor en marcha o parado.

⚠ Asegúrese de que los cambios durante el funcionamiento no comportan riesgo.
Es preferible efectuarlos con el motor parado.

Cód.	Descripción	Rango de ajuste	Ajuste de fábrica
ACC dEC	**Tiempos de rampas de aceleración y deceleración**	0,1 a 999,9 s 0,1 a 999,9 s	3 s 3 s
	Definidos para acelerar y decelerar entre 0 y la frecuencia nominal FrS (parámetro del menú drC-). Asegúrese de que el valor de dEC no es demasiado bajo con respecto a la carga que se va a detener.		
LSP	**Mínima velocidad**	0 a HSP	0 Hz
	(Frecuencia del motor con consigna mín.)		
HSP	**Máxima velocidad**	LSP a tFr	bFr
	(Frecuencia del motor con consigna máx.): asegúrese de que este ajuste conviene al motor y a la aplicación.		
ItH	**Protección térmica del motor (corriente térmica máx.)**	0 a 1,5 In (1)	Según el calibre del variador
	Ajuste ItH a la corriente nominal que figura en la placa de características del motor. Para eliminar la protección térmica, consulte el CD-ROM.		
UFr	**Compensación RI/Boost de tensión**	0 a 100%	20%
	Permite optimizar el par a velocidad muy baja (aumente el valor de UFr en caso de par insuficiente). Asegúrese de que el valor de UFr no es demasiado elevado con el motor en caliente (riesgo de inestabilidad). ⚠ Si se modifica el valor de UFt (página 59), UFr vuelve a su ajuste de fábrica (20%).		

(1) In corresponde a la corriente nominal del variador que se indica en el catálogo y en la etiqueta de características del variador.

Cód.	Descripción	Rango de ajuste	Ajuste de fábrica
FLG	**Ganancia del bucle de frecuencia**	1 a 100%	20
	Sólo se puede acceder al parámetro si UFt (página 61) = n o nLd. El parámetro FLG ajusta el seguimiento de la rampa de velocidad en función de la inercia de la máquina accionada. Valor demasiado bajo: prolongación del tiempo de respuesta. Valor demasiado elevado: rebasamiento de velocidad, inestabilidad.		
StA	**Estabilidad del bucle de frecuencia**	1 a 100%	20
	Sólo se puede acceder al parámetro si UFt (página 61) = n o nLd. Valor demasiado bajo: rebasamiento de velocidad, inestabilidad. Valor demasiado elevado: prolongación del tiempo de respuesta.		
SLP	**Compensación de deslizamiento**	0 a 150%	100
	Sólo se puede acceder al parámetro si UFt (página 61) = n o nLd. Permite ajustar la compensación de deslizamiento en torno al valor fijado por la velocidad nominal del motor. En las placas de características de los motores las indicaciones de velocidad no son siempre exactas. • Si el deslizamiento ajustado es < el deslizamiento real: el motor no gira a la velocidad correcta en el régimen establecido. • Si el deslizamiento ajustado es > el deslizamiento real: el motor está sobrecompensado y la velocidad es inestable.		
tdC1	**Tiempo de inyección automática de corriente continua en la parada**	0,1 a 30 s	0,5 s
SdC1	**Intensidad de la corriente de inyección automática en la parada**	0 a 1,2 In (1)	0,7 In (1)
	⚠ Asegúrese de que el motor admite esta corriente sin sobrecalentamiento.		
tdC2	**2º tiempo de inyección de corriente continua automática a la parada** Véase el CD-ROM.	0 a 30 s	0 s
SdC2	**2ª intensidad de la corriente de inyección automática a la parada** Véase el CD-ROM.	0 a 1,2 In (1)	0,5 In (1)
JPF	**Frecuencias ocultas**	0 a 500	0 Hz
	Impide el funcionamiento prolongado en una rango de frecuencias de ± 1 Hz alrededor de JPF. Esta función permite eliminar las velocidades críticas que comporten resonancia. El ajuste a 0 desactiva la función.		
JF2	**2ª frecuencia oculta**	0 a 500	0 Hz
	Impide el funcionamiento prolongado en una rango de frecuencias de ± 1 Hz alrededor de JF2. Esta función permite eliminar las velocidades críticas que comporten resonancia. El ajuste a 0 desactiva la función.		
SP2	**2ª velocidad preseleccionada.**	0,0 a 500,0 Hz	10 Hz
SP3	**3ª velocidad preseleccionada.**	0,0 a 500,0 Hz	15 Hz
SP4	**4ª velocidad preseleccionada.**	0,0 a 500,0 Hz	20 Hz
CLI	**Limitación de corriente**	0,25 a 1,5 In (1)	1,5 In (1)
	Permite limitar el par y el calentamiento del motor.		

(1) In corresponde a la corriente nominal del variador que se indica en el catálogo y en la etiqueta de características del variador.

Cód.	Descripción	Rango de ajuste	Ajuste de fábrica
tLS	**Tiempo de funcionamiento a mínima velocidad**	0 a 999,9 s	0 (sin límite de tiempo)
	Después de estar funcionando en LSP durante el tiempo establecido, la parada del motor se genera automáticamente. El motor rearranca si la referencia de frecuencia es superior a LSP y si hay una orden de marcha activa. Atención: el valor 0 corresponde a un tiempo ilimitado de funcionamiento.		
Ftd	No utilizado. Véase el CD-ROM.		
ttd	No utilizado. Véase el CD-ROM.		
Ctd	No utilizado. Véase el CD-ROM.		
SdS	No utilizado. Véase el CD-ROM.		
SFr	**Frecuencias de corte**	2,0 a 16 kHz	4 kHz
	También se puede acceder a este parámetro en el menú drC-.		

Menú de control del motor drC-

Los parámetros sólo se pueden modificar en parado (sin orden de marcha), excepto tUn, que puede provocar la puesta en tensión del motor.
Para optimizar el rendimiento del arrastre:

- **introduzca los valores que figuran en la placa de características del motor en el menú accionamiento,**
- **ejecute un autoajuste (en un motor asíncrono estándar).**

Cód.	Descripción	Rango de ajuste	Ajuste de fábrica
bFr	**Frecuencia estándar de motor**		50
	50 Hz: IEC 60 Hz: NEMA Este parámetro modifica los preajustes de los parámetros: HSP (página 56), Ftd (página 58), FrS (página 58) y tFr (página 59).		
UnS	**Tensión nominal del motor que aparece en la placa de características**	Según calibre del variador	Según calibre del variador
FrS	**Frecuencia nominal del motor que aparece en la placa de características**	10 a 500 Hz	50 Hz
	El ajuste de fábrica es de 50 Hz, y es sustituido por un preajuste de 60 Hz si bFr se establece en 60 Hz.		
nCr	**Corriente nominal del motor que figura en la placa de características**	0,25 a 1,5 In (1)	Según calibre del variador
nSP	**Velocidad nominal del motor que aparece en la placa de características**	0 a 32760 rpm	Según calibre del variador
	0 a 9999 rpm y luego 10,00 a 32,76 krpm Si la placa de características no indica la velocidad nominal, consulte el CD-ROM.		
COS	**Coseno de ángulo de desfase del motor, que figura en la placa de características**	0,5 a 1	Según calibre del variador
rSC	Dejar en nO o consultar el CD-ROM.		nO

(1) In corresponde a la corriente nominal del variador que se indica en el catálogo y en la etiqueta de características del variador.

Cód.	Descripción	Rango de ajuste	Ajuste de fábrica
tUn	**Autoajuste del control del motor**		nO
	Es obligatorio configurar correctamente todos los parámetros del motor (UnS, FrS, nCr, nSP y COS) antes de realizar el autoajuste. nO: Autoajuste no realizado. YES: El autoajuste se realiza cuando es posible hacerlo, puesto que el parámetro pasa automáticamente a dOnE o nO en caso de fallo (visualización del fallo tnF). dOnE: Uso de los valores proporcionados por el autoajuste anterior. rUn: El autoajuste se realiza cada vez que hay una orden de marcha. POn: El autoajuste se realiza cada vez que hay una puesta en tensión. LI1 a LI6: El autoajuste se realiza en el momento de la transición 0 ➜ 1 de una entrada lógica asignada a esta función. **Atención**: El autoajuste tiene lugar únicamente si no hay ninguna orden activada. El proceso de autoajuste puede durar de 1 a 2 segundos. No lo interrumpa y espere a visualizar "dOnE" o "nO". ⚠ Durante el autoajuste, la corriente nominal recorre el motor.		
tUS	**Estado del autoajuste** (información, no parametrizable)		tAb
	tAb: Se utiliza el valor por defecto de la resistencia del estator para controlar el motor. PEnd: El autoajuste se ha solicitado pero todavía no se ha efectuado. PrOG: Autoajuste en curso. FAIL: El autoajuste ha fallado. dOnE: Se utiliza la resistencia del estator medida por la función de autoajuste para controlar el motor.		
UFt	**Elección del tipo de ley tensión/frecuencia**		n
	L: Par constante para motores en paralelo o motores especiales P: Par variable: aplicaciones de bombas y ventiladores n: Control vectorial del flujo sin captador para aplicaciones de par constante nLd: Ahorro energético, para aplicaciones de par variable sin necesidades dinámicas importantes (comportamiento cercano a la ley P en vacío y a la ley n en carga).		
nrd	**Frecuencia de corte aleatoria**		YES
	YES: Frecuencia con modulación aleatoria nO: Frecuencia fija La modulación de frecuencia aleatoria evita los posibles ruidos de resonancia que pueden producirse con una frecuencia fija.		
SFr	**Frecuencia de corte** (1)	2,0 a 16 kHz	4 kHz
	La frecuencia se puede ajustar para reducir el ruido del motor. Si la frecuencia se ajusta a más de 4 kHz, en caso de sobrecalentamiento el variador disminuirá automáticamente la frecuencia de corte, y la restablecerá cuando su temperatura vuelva a ser normal.		
tFr	**Frecuencia máxima de salida**	10 a 500 Hz	60 Hz
	El ajuste de fábrica es de 60 Hz, y es sustituido por un preajuste de 72 Hz si bFr se establece en 60 Hz		
SSL	**Eliminación del filtro del bucle de velocidad**		nO
	nO: El filtro del bucle de velocidad permanece activo (evita los rebasamientos de consigna). YES: El filtro del bucle de velocidad se elimina (en las aplicaciones con posicionamiento, implica un tiempo de respuesta reducido, con un posible rebasamiento de consigna).		

(1) Parámetro igualmente accesible en el menú de ajuste SEt-.

Cód.	Descripción	Rango de ajuste	Ajuste de fábrica
SCS	**Grabación de la configuración** (1)		nO
	nO: Función inactiva. Strl: Efectúa una grabación de la configuración en curso (excepto el resultado del autoajuste) en la memoria EEPROM. SCS vuelve a pasar automáticamente a nO en el momento en que se ha efectuado la grabación. Esta función permite conservar una configuración de reserva además de la configuración en curso. En los variadores salidos de fábrica, la configuración en curso y la configuración guardada se inicializan a la configuración de fábrica.		
FCS	**Retorno al ajuste de fábrica/Recuperación de la configuración** (1)		nO
	nO: Función inactiva. rECI: La configuración en curso pasa a ser igual a la configuración guardada anteriormente por SCS = Strl. Sólo se puede ver rECI si se ha efectuado una grabación. FCS vuelve a pasar automáticamente a nO en el momento en que se ha efectuado la grabación. InI: La configuración en curso pasa a ser idéntica al ajuste de fábrica. FCS vuelve a pasar automáticamente a nO en el momento en que se ha efectuado la grabación. ⚠ Para que se tengan en cuenta rECI e InI, es preciso pulsar de forma continua (2 s) la tecla ENT.		

(1) SCS y FCS son accesibles desde varios menús de configuración, pero se refieren al conjunto de menús y parámetros.

Menú Entradas/Salidas I-O-

Los parámetros sólo pueden modificarse en parado, sin orden de marcha.

Cód.	Descripción	Ajuste de fábrica
tCC	**Control 2 hilos/3 hilos (tipo de control)**	2C ATV31●●●A: LOC
	Configuración del control: 2C = control 2 hilos 3C = control 3 hilos LOC = control local (RUN/STOP/RESET del variador) sólo para ATV31●●●A. Control 2 hilos: El estado abierto o cerrado de la entrada controla la marcha o la parada. Control 3 hilos (control por pulsos): Un pulso "adelante" o "atrás" es suficiente para controlar el arranque, un pulso de "parada" es suficiente para controlar la parada. Véase el CD-ROM. En ATV31●●●A, la reconfiguración de tCC = 2C reasigna las entradas LI1 (marcha adelante) y LI2 (marcha atrás). El botón RUN del variador se desactiva, pero la referencia de velocidad sigue siendo la que indica el potenciómetro. Es posible desactivar el potenciómetro y asignar la consigna de velocidad a la entrada analógica AI1, configurando el parámetro Fr1 = AI1 en el menú CtL-. Véase el CD-ROM. ⚠ Para cambiar la asignación de tCC es necesario pulsar de forma continua (2 s) la tecla "ENT", con lo que las funciones siguientes vuelven al ajuste de fábrica: rrS, tCt y todas las funciones que afecten a las entradas lógicas.	

Cód.	Descripción	Ajuste de fábrica
tCt	**Tipo de control 2 hilos** (sólo se puede acceder al parámetro si tCC = 2C)	trn
	LEL: El estado 0 ó 1 se tiene en cuenta para la marcha o la parada. trn: Es necesario cambiar de estado (transición o flanco) para activar la marcha a fin de evitar un rearranque imprevisto tras una interrupción de la alimentación. PFO: El estado 0 ó 1 se tiene en cuenta para la marcha o la parada, pero la entrada de giro "adelante" siempre tiene prioridad sobre la entrada de giro "atrás".	
rrS	**Marcha atrás por entrada lógica**	si tCC = 2C: LI2 si tCC = 3C: LI3 si tCC = LOC: nO
	Si rrS = nO, la marcha atrás permanece activa, por tensión negativa en AI2, por ejemplo. nO: No asignada LI2: Entrada lógica LI2, accesible si tCC = 2C LI3: Entrada lógica LI3, LI4: Entrada lógica LI4 LI5: Entrada lógica LI5 LI6: Entrada lógica LI6.	
CrL3 CrH3 AOIt dO r1 r2	Consulte el CD-ROM.	
SCS FCS	Igual que el menú drC-, página 60.	

Menú de supervisión SUP-

Los parámetros son accesibles en marcha o en parado.

Ciertas funciones incluyen numerosos parámetros. Para facilitar la programación y evitar una tediosa serie de parámetros, estas funciones han sido agrupadas en submenús.
Los submenús se identifican por un guión situado a la derecha de su código, como en los menús: LIF-, por ejemplo.

Cuando el variador está en marcha, el valor mostrado corresponde al valor de uno de los parámetros de supervisión. Por defecto, el valor asignado es la frecuencia de salida aplicada al motor (parámetro rFr).

Durante la visualización del valor del nuevo parámetro de supervisión deseado, es necesario pulsar una segunda vez la tecla "ENT" de forma continuada (2 segundos) para validar el cambio de parámetro y memorizarlo. Desde ese momento, será el valor de ese parámetro el que se visualizará en marcha (incluso tras una desconexión en tensión).
Si no se confirma la nueva selección pulsando por segunda vez la tecla "ENT" de forma continuada, se volverá al parámetro anterior después de la desconexión.

Cód.	Descripción	Rango de variación
LFr	**Consigna de frecuencia para el control efectuado por el terminal integrado o por el terminal remoto**	0 a 500 Hz
rPI	**Consigna interna PI**	0 a 100%

Estos parámetros sólo aparecen si la función ha sido validada.

Cód.	Descripción	Rango de variación
FrH	**Consigna de frecuencia antes de rampa** (en valor absoluto)	0 a 500 Hz
rFr	**Frecuencia de salida aplicada al motor**	- 500 Hz a + 500 Hz
SPd	**Frecuencia de salida en unidad seleccionada por el cliente**	
	Véase el CD-ROM.	
LCr	**Corriente en el motor**	
OPr	**Potencia del motor**	
	100% = Potencia nominal del motor	
ULn	**Tensión de red** (proporciona la tensión de red a través del bus CC, en régimen motor o en parado)	
tHr	**Estado térmico del motor**	
	100% = Estado térmico nominal 118% = Nivel "OLF" (sobrecarga motor)	
tHd	**Estado térmico del variador**	
	100% = Estado térmico nominal 118% = Nivel "OHF" (sobrecarga motor)	
LFt	**Último fallo aparecido**	
	Véase Fallos - causas - soluciones, página 63	
Otr	**Par motor**	
	100% = Par nominal del motor	
rtH	**Tiempo de funcionamiento**	0 a 65530 horas
	Tiempo acumulado de puesta en tensión del motor: de 0 a 9999 (horas), y luego de 10,00 a 65,53 (kilohoras). Puede restablecerse a cero con el parámetro rPr del menú FLt- (consulte el CD-ROM).	
COd	**Código de bloqueo del terminal**	
	Véase el CD-ROM	
tUS	**Estado del autoajuste**	
	tAb: Se utiliza el valor por defecto de la resistencia del estator para controlar el motor. PEnd: El autoajuste se ha solicitado pero todavía no se ha efectuado. PrOG: Autoajuste en curso. FAIL: El autoajuste ha fallado. dOnE: La gestión del arrastre utiliza la resistencia del estator medida por la función de autoajuste.	
UdP	**Visualización de la versión de software del ATV31**	
	P.ej.: 1102 = V1.1 IE02.	
LIA-	**Funciones de las entradas lógicas**	
	Véase el CD-ROM.	
AIA-	**Funciones de las entradas analógicas**	
	Véase el CD-ROM.	

Fallos - causas - soluciones

Asistencia a la manipulación, visualización de fallo

Si detecta anomalías en la puesta en servicio o durante la explotación, compruebe en primer lugar que las recomendaciones relativas a las condiciones ambientales, el montaje y las conexiones se han respetado.

El primer fallo que se detecta queda grabado en memoria y aparece parpadeando en la pantalla: el variador se bloquea y el contacto del relé de fallo (R1A - R1C o R2A - R2C) se abre.

El variador no arranca y no muestra ningún fallo

- Si no se muestra ningún mensaje en el display, compruebe que el variador reciba la alimentación correcta.
- Otros casos: consulte el CD-ROM.

Fallos que necesitan rearme

La causa del fallo debe eliminarse antes del rearme dejando sin tensión de alimentación al variador hasta que el display se apague y, seguidamente, poniéndolo de nuevo en tensión.

Fallo	Causa probable	Solución
CAnF fallo CANopen	• interrupción de comunicación en bus CANopen	• verifique el bus de comunicación. • consulte la documentación específica.
CrF circuito de carga de condensadores	• fallo de control del relé de carga o resistencia de carga deteriorada	• contacte al servicio técnico.
EEF fallo EEPROM	• fallo de memoria interno	• verifique las condiciones del entorno (compatibilidad electromagnética). • sustituya el variador.
InF fallo interno	• fallo interno	• verifique las condiciones ambientales (compatibilidad electromagnética). • sustituya el variador.
LFF corte 4-20 mA	• pérdida de la consigna de 4-20 mA en la entrada AI3	• verifique la conexión en la entrada
ObF sobretensión en deceleración	• frenado demasiado brusco • carga arrastrante	• aumente el tiempo de deceleración. • añada una resistencia de frenado en caso necesario. • consulte la función brA (en el CD-ROM).
OCF sobreintensidad	• parámetros de los menús SEt- y drC- incorrectos • inercia o carga demasiado alta • bloqueo mecánico	• compruebe los parámetros de SEt- y drC-. • compruebe el dimensionamiento motor/ variador/carga. • compruebe el estado de la mecánica.
OHF sobrecarga del variador	• temperatura del variador demasiado elevada	• compruebe la carga del motor, la ventilación del variador y las condiciones ambientales. Espere a que se enfríe para volver a arrancarlo.
OLF sobrecarga del motor	• disparo por corriente del motor demasiado elevada	• verifique los ajustes ItH (página 56) de la protección térmica del motor y compruebe la carga del mismo. Espere a que se enfríe para volver a arrancarlo.

Fallo	Causa probable	Solución
OPF corte de fase del motor	• corte de fase a la salida del variador • contactor aguas abajo abierto • motor sin cablear o de potencia demasiado baja • inestabilidades instantáneas de la corriente del motor	• verifique las conexiones del variador al motor. • en caso de utilizar un contactor aguas abajo, fije los parámetros OPL a OAC (consulte el CD-ROM, menú FLt-). • prueba con motor de baja potencia o sin motor: fije los parámetros OPL a nO (consulte el CD-ROM, menú FLt-). • compruebe y optimice los parámetros UFr (página 56), UnS y nCr (página 58), y efectúe un autoajuste mediante tUn (página 59).
OSF sobretensión	• tensión de red demasiado elevada • red perturbada	• verifique la tensión de red.
PHF corte de fase de la red	• corte de una fase • utilización de un ATV31 trifásico en red monofásica • carga con equilibrado Esta protección actúa únicamente en carga.	• compruebe la conexión y los fusibles. • utilice una red trifásica. • inhiba el fallo por IPL = nO (consulte el CD-ROM)
SCF cortocircuito del motor	• cortocircuito o puesta a tierra en la salida del variador • corriente de fuga importante a tierra en la salida del variador en el caso de varios motores en paralelo.	• verifique los cables de conexión del variador al motor y el aislamiento del motor. • reduzca la frecuencia de corte. • añada inductancias en serie con el motor.
SLF fallo Modbus	• interrupción de comunicación en bus Modbus	• verifique el bus de comunicación. • consulte la documentación específica.
SOF sobrevelocidad	• inestabilidad • carga de accionamiento muy elevada	• compruebe los parámetros del motor, la ganancia y la estabilidad. • añada una resistencia de frenado. • compruebe el dimensionamiento motor/variador/carga.
tnF error de autoajuste	• motor especial o motor de potencia no adaptada al variador • motor no conectado al variador	• utilice la ley L o la ley P (UFt, página 59). • compruebe la presencia del motor durante el autoajuste. • en caso de utilizar un contactor aguas abajo, ciérrelo durante el autoajuste.

Fallos rearmados automáticamente a la desaparición de la causa

Fallo	Causa probable	Solución
CFF fallo de configuración	• la configuración actual es incoherente	• vuelva al ajuste de fábrica o a la configuración guardada si es válida. Véase el parámetro FCS del menú drC- (página 60).
CFI fallo de configuración por enlace serie	• configuración no válida (la configuración cargada en el variador por enlace serie es incoherente)	• compruebe la configuración previamente cargada. • cargue una configuración coherente.
USF subtensión	• red sin potencia suficiente • bajada de tensión transitoria • resistencia de carga defectuosa	• verifique la tensión y el parámetro de tensión. • contacte al servicio técnico.

Sommario

Consigli preliminari _____ 66
Le fasi di installazione e messa in servizio _____ 67
Configurazione di base _____ 68
Sostituzione di un ATV 28 con un ATV 31 _____ 68
Compatibilità elettromagnetica _____ 69
Funzioni del display e dei tasti _____ 70
Accesso ai menu _____ 71
Configurazione del parametro bFr _____ 72
Menu regolazioni SEt- _____ 72
Menu controllo motore drC- _____ 74
Menu Ingressi /uscite I-O- _____ 76
Menu Visualizzazione SUP- _____ 77
Difetti - cause - procedure di intervento _____ 79

Il motore può essere fermato anche con variatore in funzione mediante annullamento dei comandi di marcia o del riferimento di velocità, sempre con il variatore alimentato. Se la sicurezza del personale impone di impedire eventuali riavviamenti intempestivi, il blocco elettronico è insufficiente: *prevedere un dispositivo d'interruzione sul circuito di potenza.*

Il variatore integra dei dispositivi di sicurezza che possono, in caso di guasto, comandare l'arresto del variatore e di conseguenza l'arresto del motore. Il motore può a sua volta subire un arresto per blocco meccanico. Gli arresti possono inoltre essere dovuti a variazioni di tensione e in modo particolare a interruzioni dell'alimentazione.
La scomparsa delle cause di arresto rischia di provocare un riavviamento che potrebbe costituire un pericolo per alcune macchine o impianti, in particolare per quelle che devono essere conformi alle normative in materia di sicurezza.

In questo caso è quindi importante che l'operatore si tuteli contro l'eventualità di un riavviamento utilizzando ad esempio un rilevatore di bassa velocità che, in caso di arresto non programmato del motore comandi l'interruzione dell'alimentazione del variatore.

L'installazione e la messa in servizio del variatore devono essere effettuate in conformità con quanto previsto dalle norme internazionali IEC e nazionali del Paese di utilizzo.
La messa in conformità spetta all'installatore che, per quanto concerne la Comunità Europea, deve rispettare, tra le altre normative, la direttiva EMC.
Il rispetto dei requisiti essenziali della direttiva EMC è condizionato naturalmente dall'applicazione di quanto previsto dal documento.

L'Altivar 31 deve essere considerato un componente poichè in base alle direttive europee (direttiva macchine e direttiva compatibilità elettromagnetica) non si tratta né di una macchina né di un apparecchio pronto all'impiego. Spetta all'utilizzatore finale garantire la conformità della sua macchina a tali norme.

Il variatore non deve essere utilizzato come dispositivo di sicurezza per le macchine che presentano un rischio per beni o persone (apparecchiature di sollevamento ad esempio).
I controlli di sovravelocità o di non controllo traiettoria devono essere in questo caso garantiti da dispositivi di sicurezza distinti e indipendenti dal variatore.

I prodotti e i materiali presentati in questo manuale sono in qualsiasi momento suscettibili di evoluzione o modifiche sia sul piano estetico che tecnico e d'impiego. La loro descrizione non può in alcun caso rivestire un aspetto contrattuale.

Consigli preliminari

Questa guida semplificata descrive la messa in servizio minima per la configurazione di base del variatore.

Tutti i funzionamenti, parametri e difetti descritti in questo documento si riferiscono alla configurazione di base. Se quest'ultima è stata modificata in uno dei menu CtL-, FUn- o FLt-, è possibile che possano essere riscontrate delle differenze.
Il CD-rom fornito con il variatore comprende la descrizione completa.

Prima di alimentare e configurare il variatore

- **Verificare che la tensione di rete sia compatibile con la gamma della tensione di alimentazione del variatore. Il mancato rispetto della tensione di rete può provocare danni irreversibili.**
- **Scollegare gli ingressi logici (stato 0) per evitare eventuali riavviamenti intempestivi. Di default, all'uscita dai menu di configurazione, l'assegnazione di un ingresso ad un ordine di marcia provoca l'avviamento immediato del motore.**

Regolazione utente ed estensione delle funzioni

Se necessario il display e i pulsanti consentono la modifica delle regolazioni e l'estensione delle funzioni.
Il **ripristino della preregolazione di base** è facilmente effettuabile attraverso il parametro FCS del menu drC-.
I parametri sono di tre tipi:
- parametri di visualizzazione: valori visualizzati dal variatore
- parametri di regolazione: modificabili a motore fermo o in funzione
- parametri di configurazione: modificabili solo a motore fermo e non in frenatura. Visualizzabili in funzionamento

.

- **Accertarsi che le modifiche delle regolazioni effettuate in funzionamento non presentino pericoli; si consiglia comunque di effettuarle preferibilmente a motore fermo.**

Avviamento

Importante: nella preregolazione di base, in caso di messa in tensione o reset manuale dei difetti o ancora in seguito ad un comando di arresto, il motore può essere alimentato solo in seguito al reset dei comandi "avanti", "indietro". Di default il variatore visualizza "nst" ma non parte.

Prova su motore di debole potenza o senza motore

Nella preregolazione di base la funzione di rilevamento perdita di fase motore è attiva. Per verificare il variatore in condizioni di test o di manutenzione e senza ricorrere ad un motore di potenza equivalente al calibro del variatore (in particolare per i variatori di forte potenza), disattivare la funzione di rilevamento perdita di fase motore e configurare la legge tensione / frequenza UFt = L (vedere CD-rom).

Utilizzo su rete IT

Rete IT: Rete.
Utilizzare un controllore permanente d'isolamento compatibile con i carichi non lineari: tipo XM200 di marchio Merlin Gerin, ad esempio.
I variatori ATV 31●●●●●●M2 e N4 integrano dei filtri RFI. Per impiego su rete IT, è possibile scollegare i filtri dalla terra.
Consultare il CD-rom fornito con il variatore.

Le fasi di installazione e messa in servizio

1 - Ricevimento del variatore

- Accertarsi che il riferimento dell'avviatore riportato sull'etichetta sia conforme a quanto indicato sulla bolla di consegna e sull'ordine.
- Aprire l'imballo e verificare che l'Altivar 31 non sia stato danneggiato durante il trasporto.

2 - Verificare che la tensione di rete sia compatibile con la gamma di alimentazione del variatore (vedere la targhetta del variatore)

- Il mancato rispetto della tensione di rete può provocare danni irreversibili al variatore

3 - Fissare il variatore

4 - Collegare al variatore:

- la rete di alimentazione, assicurandosi che:
  - **sia compatibile con la gamma di tensione del variatore**
  - **sia fuori tensione**
- il motore, assicurandosi che gli avvolgimenti motore siano collegati secondo la tensione della rete di alimentazione
- il comando tramite gli ingressi logici
- la regolazione della velocità tramite gli ingressi logici o analogici

5 - Alimentare il variatore senza dare l'ordine di marcia

6 - Configurare:

La frequenza nominale (bFr) del motore, se diversa da 50 Hz.

7 - Configurare nel menu drC-:

I parametri motore, solo nel caso in cui la configurazione di base del variatore non sia adatta all'applicazione.

8 - Configurare nel menu I-O-:

Solo nel caso in cui la configurazione di base del variatore non sia adatta all'applicazione, il tipo di controllo: 3 fili, o 2 fili su transizione, o 2 fili su livello, o 2 fili su livello con priorità marcia avanti, o comando locale per ATV31●●●●●●A.

Si consiglia di accertarsi che le funzioni programmate siano compatibili con lo schema di cablaggio utilizzato.

9 - Regolare nel menu SEt-:

- i parametri ACC (Accelerazione) e dEC (Decelerazione),
- i parametri LSP (Velocità minima quando il valore è zero) e HSP (Velocità massima quando il valore è al massimo),
- il parametro ItH (Protezione termica motore),

10 - Avviare

Consigli pratici

- **Il ripristino della preregolazione di base** è sempre possibile con il parametro FCS (impostare FCS = InI), nei menu drC- (pagina 76) o I-O- (pagina 77).
- L'autotuning, effettuabile con il parametro tUn del menu drC- (pagina 75), permette di ottenere prestazioni ottimali in precisione e tempi di risposta.

Configurazione di base

L'Altivar 31 è preregolato di base per le condizioni d'impiego più comuni e frequenti:
- Visualizzazione: variatore pronto (rdY) a motore fermo e frequenza motore con motore in funzione.
- Frequenza motore (bFr): 50 Hz.
- Applicazione a coppia costante, controllo vettoriale del flusso senza rilevatore (UFt = n).
- Modo di arresto normale su rampa di decelerazione.
- Modo di arresto su difetto: ruota libera
- Rampe lineari (ACC, dEC): 3 secondi.
- Piccola velocità (LSP): 0 Hz.
- Grande velocità (HSP): 50 Hz.
- Corrente termica motore (ItH) = corrente nominale motore (valore in base al calibro del variatore).
- Corrente di frenatura con iniezione all'arresto (SdC1) = 0,7 x corrente nominale variatore, per 0,5 secondi.
- Adattamento automatico della rampa di decelerazione in caso di sovratensione alla frenatura.
- Nessun riavviamento automatico in seguito ad un difetto.
- Frequenza di commutazione 4 kHz.
- Ingressi logici:
  - LI1, LI2 (2 sensi di marcia): comando 2 fili su transizione,
    LI1 = marcia avanti, LI2 = marcia indietro, non attivi sui variatori ATV 31●●●●●●A (non configurati).
  - LI3, LI4: 4 velocità preselezionate
    (velocità 1 = riferimento velocità o LSP, velocità 2 = 10 Hz, velocità 3 = 15 Hz, velocità 4 = 20 Hz).
  - LI5 - LI6: non attivi (non configurati).
- Ingressi analogici:
  - AI1: riferimento velocità 0-10 V, non attivo sugli ATV 31●●●●●●A (non configurato).
  - AI2: riferimento sommatore velocità 0±10 V.
  - AI3: 4-20 mA non attivo (non configurato).
- Relè R1: il contatto si apre in caso di difetto (o di variatore fuori tensione)
- Relè R2: non attivo (non configurato).
- Uscita analogica AOC: 0-20 mA, non attiva (non configurata).

Gamma ATV 31●●●●●●A

I variatori ATV 31●●●●●●A preregolati in fabbrica sono forniti con comando locale attivato: i pulsanti RUN, STOP e il potenziometro del variatore sono attivi. Gli ingressi logici LI1 e LI2 così come l'ingresso analogico AI1 non sono attivi (non configurati).

Se i valori sopra riportati sono compatibili con l'applicazione, il variatore è pronto per essere utilizzato senza dover procedere alla modifica delle regolazioni.

Sostituzione di un ATV 28 con un ATV 31

La tabella sottostante riporta la corrispondenza dei morsetti controllo tra i due modelli di variatori.

Morsetti di controllo ATV 28	Funzione preregolaz. di base	Morsetti di controllo ATV 31	Funzione preregolaz. di base
R1A - R1B - R1C	Relè di difetto	R1A - R1B - R1C	Relè di difetto
R2A - R2C	Riferimento velocità raggiunta	R2A - R2C	Non configurato
COM	0 V	COM	0 V
AI1 (0 - 10 V)	Riferimento velocità	AI1 (0 - 10 V)	Riferimento velocità
+ 10 V	+ 10 V	10 V	+ 10 V
AI2 (0 - 10 V)	Riferim. sommatore velocità	AI2 (0 - ± 10 V)	Riferim. sommatore velocità
AIC (X - Y mA)	Non configurato	AI3 (X - Y mA)	Non configurato
AO	Frequenza motore	AOC / AOV	Non configurato
LI1 - LI2	Marcia avanti / indietro	LI1 - LI2	Marcia avanti / indietro
LI3 - LI4	Velocità preselezionate	LI3 - LI4	Velocità preselezionate
+ 24 V	+ 24 V	24 V	+ 24 V

Compatibilità elettromagnetica

Principio

- Equipotenzialità "alta frequenza" delle masse tra il variatore, il motore e le schermature dei cavi.
- Utilizzo dei cavi schermati collegati alla massa a 360° ad entrambe le estremità per i cavi motore **6**, i cavi dell'eventuale resistenza di frenatura **8** e i cavi di comando **7**. La schermatura può essere realizzata su una parte del percorso con tubi o canaline metalliche a condizione che non vi sia discontinuità. In caso di morsettiere intermedie queste devono essere protette da un involucro metallico schermato EMC.
- Separare il più possibile il cavo di alimentazione (rete) dal cavo motore.

Schema d'installazione (esempio)

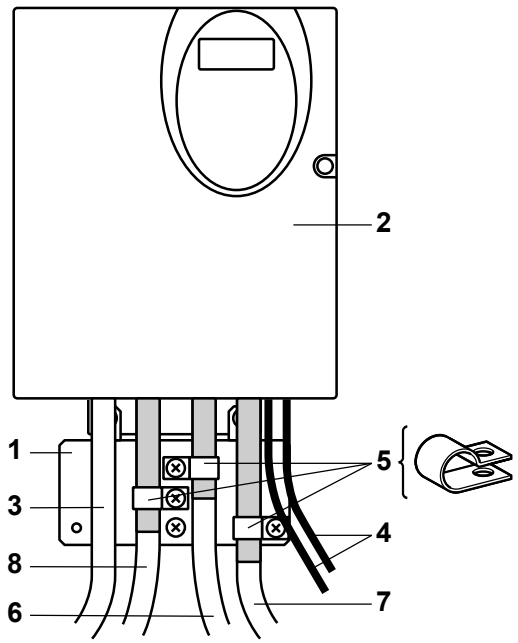

1 Piano di massa in lamiera fornito con il variatore, da montare su quest'ultimo, come illustrato dal disegno.

2 Altivar 31

3 Fili o cavo di alimentazione non schermati.

4 Fili non schermati per l'uscita dei contatti dei relè di sicurezza.

5 Fissaggio e messa a massa delle schermature dei cavi 6, 7 e 8 il più vicino possibile al variatore:
- scoprire le schermature,
- utilizzare collari in metallo inossidabile di dimensioni adatte, sulle parti scoperte delle schermature, per il fissaggio sulla lamiera 1.
Le schermature devono essere sufficientemente serrate sulla lamiera affinchè i contatti siano effettivi.

6 Cavo schermato per collegamento del motore. Per i variatori da 0,18 a 1,5 kW, se la frequenza di commutazione supera i 12 kHz, utilizzare dei cavi a bassa capacità lineare : 130 pF (picoFarad) max al metro.

7 Cavo schermato per collegamento del dispositivo di comando. Per gli impieghi che richiedono numerosi conduttori utilizzare sezioni ridotte (0,5 mm^2).

8 Cavo schermato per collegamento dell'eventuale resistenza di frenatura.

Nota:
- In caso d'utilizzo d'un filtro d'ingresso supplementare questo sarà montato sotto al variatore e collegato direttamente alla rete con un cavo non schermato. Il collegamento al variatore viene quindi realizzato con il cavo di uscita del filtro.
- Il collegamento equipotenziale AF delle masse tra il variatore, il motore e le schermature dei cavi richiede comunque il collegamento dei conduttori di protezione PE (verde-giallo) agli appositi morsetti di ciascun apparecchio.

Funzioni del display e dei tasti

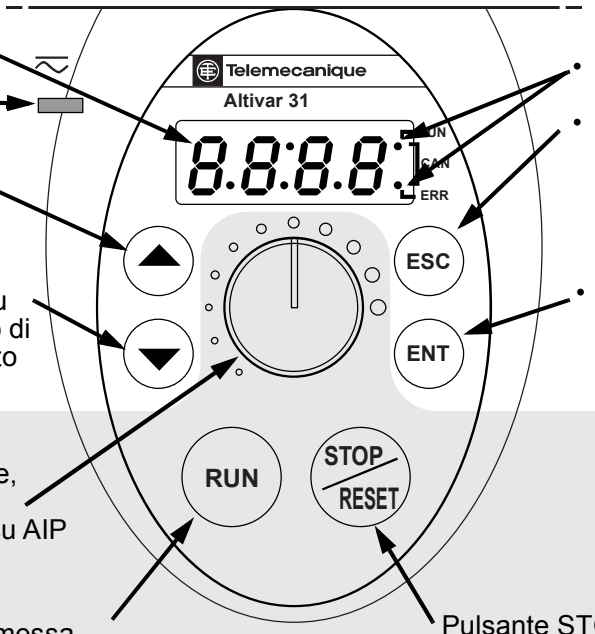

- 4 display "7 segmenti"
- Spia rossa "bus DC sotto tensione"
- Consente di passare al menu o al parametro precedente, o di aumentare il valore visualizzato
- Consente di passare al menu o al parametro successivo, o di diminuire il valore visualizzato

- 2 spie di stato CANopen
- Consente di uscire da un menu o da un parametro, o di lasciare il valore visualizzato per tornare al valore precedente in memoria
- Consente di entrare in un menu o in un parametro, o di salvare il parametro o il valore visualizzati

Solo per ATV 31●●●●●●A

- Potenziometro di regolazione, attivo se il parametro Fr1 del menu CtL resta configurato su AIP

- Pulsante RUN: comanda la messa in tensione del motore in marcia avanti, se il parametro tCC del menu I-O resta configurato su LOC

Pulsante STOP/RESET
- permette il reset dei difetti
- può sempre comandare l'arresto del motore.
  - Se tCC (menu I-O) non è impostato su LOC, l'arresto avviene a ruota libera.
  - Se tCC (menu I-O) resta impostato su LOC, l'arresto avviene su rampa, ma se è in corso la frenatura con iniezione di cc, questo avverrà a ruota libera.

• Premendo i tasti ▲ o ▼ la scelta non viene memorizzata.

• Tenendo premuti (>2 s) i tasti ▲ o ▼ si ottiene uno scorrimento rapido dei valori.

Memorizzazione, registrazione della scelta visualizzata: tasto ENT

La memorizzazione è segnalata dal lampeggiamento del valore visualizzato

Visualizzazione normale con variatore non in difetto o in fase di messa in servizio:
- 43.0: Visualizzazione del parametro selezionato nel menu SUP (di default: frequenza motore). In caso di limitazione di corrente, il valore visualizzato lampeggia.
- init: Sequenza d'inizializzazione
- rdY: Variatore pronto.
- dcb: Frenatura con iniezione di corrente continua in corso.
- nSt: Arresto a ruota libera.
- FSt: Arresto rapido
- tUn: Autotuning in corso.

In caso di difetto questo viene visualizzato tramite lampeggiamento.

Opzione terminale remotato
Consultare il CD-rom.

Accesso ai menu

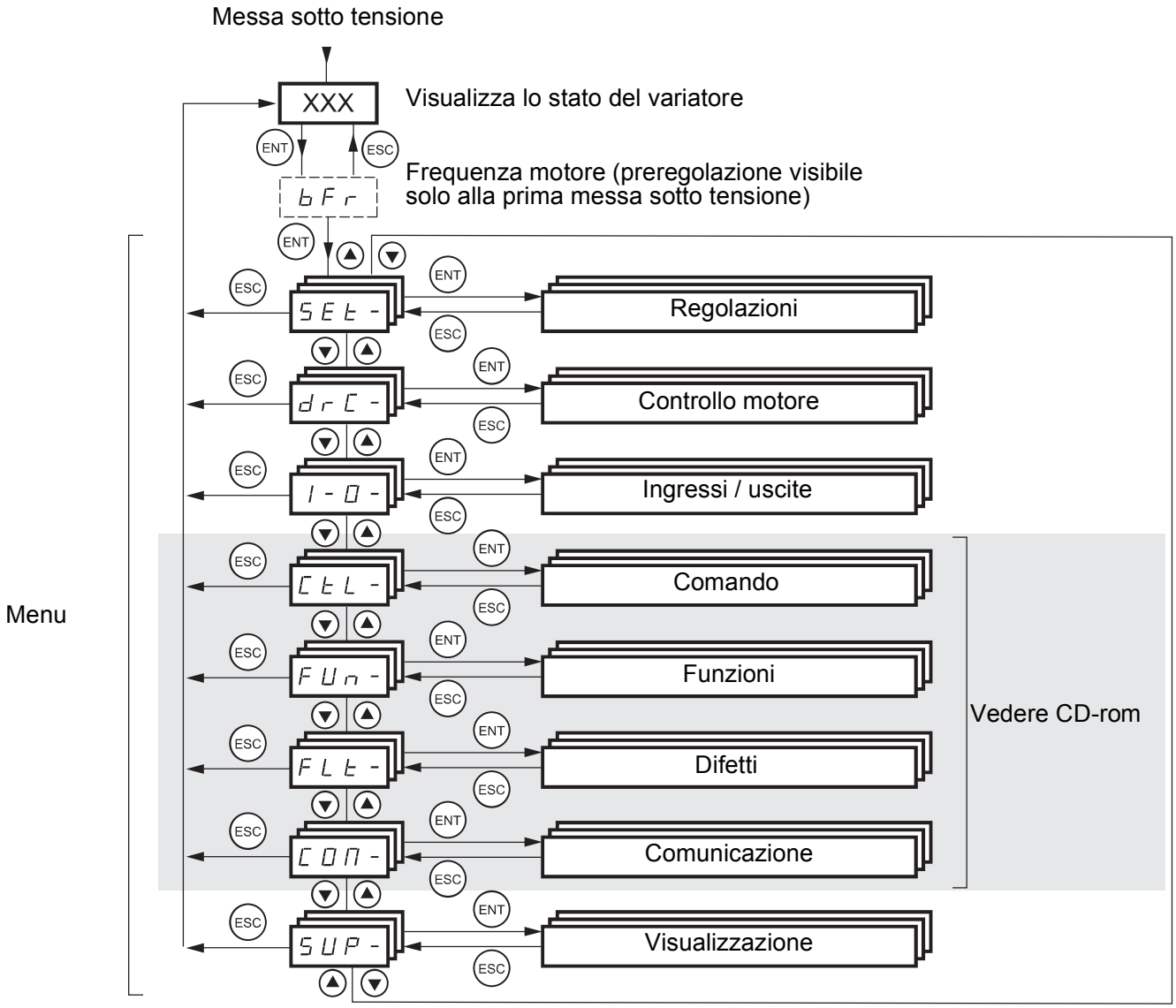

I codici dei menu sono divisi dai codici dei parametri con un trattino a destra. Esempio: menu SEt-, parametro ACC.

Memorizzazione, registrazione della scelta visualizzata : tasto ENT

Esempio:

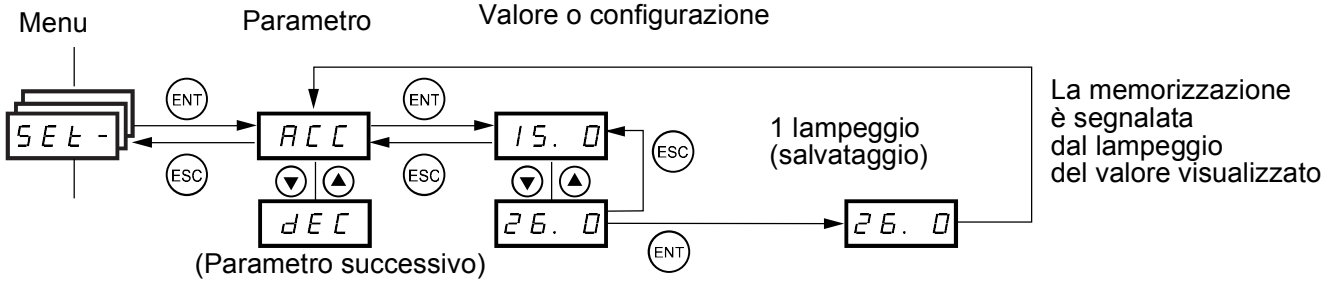

ITALIANO

Configurazione del parametro bFr

Questo parametro può essere modificato solo a motore fermo, variatore bloccato.

Cod.	Descrizione	Gamma di regolazione	Regolazione di base
bFr	**Frequenza standard motore**		50
	Questo parametro è visibile in questo caso solo alla prima messa sotto tensione. Resta sempre modificabile nel menu drC-. 50 Hz: IEC 60 Hz: NEMA Questo parametro modifica le preregolazioni dei parametri: HSP pagina 72, Ftd pagina 74, FrS pagina 74 e tFr pagina 75.		

Menu regolazioni SEt-

I parametri di regolazione possono essere modificati sia in marcia che a motore fermo.

Accertarsi che le modifiche effettuate con motore in funzione non presentino alcun pericolo; si consiglia tuttavia di effettuarle preferibilmente a motore fermo.

Cod.	Descrizione	Gamma di regolazione	Regolaz. di base
ACC dEC	**Tempo delle rampe di accelerazione e di decelerazione**	da 0,1 a 999,9 s da 0,1 a 999,9 s	3 s 3 s
	Definiti per accelerare e decelerare passando da 0 alla frequenza nominale FrS e viceversa (parametro del menu drC-). Accertarsi che il valore di dEC non sia troppo basso rispetto al carico da fermare.		
LSP	**Velocità minima**	da 0 a HSP	0 Hz
	(Frequenza motore a riferimento min)		
HSP	**Velocità massima**	da LSP a tFr	bFr
	(frequenza motore a riferimento max): accertarsi che questa regolazione sia adatta al motore e all'applicazione.		
ItH	**Protezione termica del motore - corrente termica max**	da 0 a 1,5 In (1)	In base al calibro del variatore
	Regolare ItH all'intensità nominale indicata sulla targhetta del motore. Per disattivare la protezione termica, vedere il CD-rom.		
UFr	**Compensazione RI / Boost di tensione**	da 0 a 100 %	20 %
	Consente di ottimizzare la coppia a bassissima velocità (aumentare UFr in caso di debole coppia). Accertarsi che il valore di UFr non sia troppo alto con motore a caldo (rischio d'instabilità). Se si modifica UFt (pagina 75) UFr torna alla pregolazione di base (20 %).		

(1) In corrisponde alla corrente nominale variatore indicata nel catalogo e sulla targhetta del variatore.

Cod.	Descrizione	Gamma di regolazione	Regolaz. di base
FLG	**Guadagno dell'anello di frequenza**	da 1 a 100 %	20
	Parametro accessibile solamente se UFt (pagina 75)=n o nLd Il parametro FLG regola la rampa di velocità in funzione dell'inerzia della macchina comandata. Valore troppo basso: prolungarsi del tempo di risposta. Valore eccessivo: superamento della velocità, instabilità.		
StA	**Stabilità dell'anello di frequenza**	da 1 a 100 %	20
	Parametro accessibile solamente se UFt (pagina 75)=n o nLd Valore troppo basso: superamento della velocità, instabilità. Valore eccessivo: prolungarsi del tempo di risposta.		
SLP	**Compensazione di scorrimento**	da 0 a 150%	100
	Parametro accessibile solamente se UFt (pagina 75)=n o nLd Consente di regolare la compensazione di scorrimento intorno al valore fissato dalla velocità nominale del motore. Sulle targhe motore le velocità indicate non sono obbligatoriamente esatte. • Se lo scorrimento regolato è < scorrimento reale: il motore non gira alla velocità corretta al regime stabilito. • Se lo scorrimento regolato è > scorrimento reale: il motore è sovracompensato e la velocità è instabile.		
tdC1	**Tempo di iniezione corrente continua automatica all'arresto.**	da 0,1 a 30 s	0,5 s
SdC1	**Intensità della corrente d'iniezione automatica all'arresto**	da 0 a 1,2 In (1)	0,7 In (1)
	⚠ Accertarsi che il motore sia in grado di sopportare questa corrente senza surriscaldarsi.		
tdC2	**2º tempo d'iniezione cc automatica all'arresto**. Vedere CD-rom.	da 0 a 30 s	0 s
SdC2	**2ª intensità della corrente d'iniezione automatica all'arresto**. Vedere CD-rom.	da 0 a 1,2 In (1)	0,5 In (1)
JPF	**Frequenza mascherata**	da 0 a 500	0 Hz
	Impedisce un funzionamento prolungato su una gamma di frequenza di ± 1 Hz vicino a JPF. Questa funzione consente di eliminare una velocità critica che provocherebbe una risonanza. La regolazione a 0 disattiva la funzione.		
JF2	**2ª frequenza mascherata**	da 0 a 500	0 Hz
	Impedisce un funzionamento prolungato su una gamma di frequenza di ± 1 Hz vicino aJF2. Questa funzione consente di eliminare una velocità critica che provocherebbe una risonanza. La regolazione a 0 disattiva la funzione.		
SP2	**2ª velocità preselezionata.**	da 0,0 a 500,0 Hz	10 Hz
SP3	**3ª velocità preselezionata.**	da 0,0 a 500,0 Hz	15 Hz
SP4	**4ª velocità preselezionata.**	da 0,0 a 500,0 Hz	20 Hz
CL1	**Limitazione di corrente**	da 0,25 a 1,5 In (1)	1,5 In (1)
	Consente di limitare la coppia e il riscaldamento del motore.		

(1) In corrisponde alla corrente nominale variatore indicata nel catalogo e sulla targhetta del variatore.

Cod.	Descrizione	Gamma di regolazione	Regolaz. di base
tLS	**Tempo di funzionamento a piccola velocità**	da 0 a 999,9 s	0 (nessun tempo)
	In seguito ad un funzionamento a LSP per un tempo prestabilito, l'arresto del motore viene comandato automaticamente. Il motore riavvia se il riferimento di frequenza è superiore a LSP e se è sempre presente un ordine di marcia. Attenzione: il valore 0 corrisponde ad un tempo illimitato.		
Ftd	Non utilizzato, vedere cd-rom		
ttd	Non utilizzato, vedere cd-rom		
Ctd	Non utilizzato, vedere cd-rom		
SdS	Non utilizzato, vedere cd-rom		
SFr	**Frequenza di commutazione**	da 2,0 a 16 kHz	4 kHz
	Questo parametro è accessibile anche nel menu drC-.		

Menu controllo motore drC-

I parametri possono essere modificati solo a motore fermo, senza ordine di marcia, tranne tUn, che può provocare la messa sotto tensione del motore.
L'ottimizzazione delle prestazioni di funzionamento si ottiene:
- **inserendo i valori indicati sulla targhetta del motore nel menu controllo,**
- **avviando un autotuning (su un motore asincrono standard).**

Cod.	Descrizione	Gamma di regolazione	Regolaz. di base
bFr	**Frequenza standard motore**		50
	50 Hz: IEC 60 Hz: NEMA Questo parametro modifica le preregolazioni dei parametri: HSP pagina 72, Ftd pagina 74, FrS pagina 74 e tFr pagina 75.		
UnS	**Tensione nominale motore indicata sulla targhetta motore**	In base al calibro del variatore	In base al calibro del variatore
FrS	**Frequenza nominale motore indicata sulla targhetta motore**	da 10 a 500 Hz	50 Hz
	La pregolazione di base è 50 Hz, sostituita da un valore di 60 Hz se bFr è impostato a 60 Hz.		
nCr	**Corrente nominale motore indicata sulla targhetta motore**	da 0,25 a 1,5 In (1)	In base al calibro del variatore
nSP	**Velocità nominale motore indicata sulla targhetta motore**	da 0 a 32760 RPM	In base al calibro del variatore
	da 0 a 9999 RPM quindi da 10.00 a 32.76 KRPM Se sulla targhetta non è riportata la velocità nominale, consultare il CD-rom.		
COS	**Cos Phi motore indicato sulla targhetta motore**	da 0,5 a 1	In base al calibro del variatore
rSC	Lasciare a nO oppure consultare il Cd Rom		nO

(1) In corrisponde alla corrente nominale variatore indicata nel catalogo e sulla targhetta del variatore.

Cod.	Descrizione	Gamma di regolazione	Regolaz. di base
tUn	**Autotuning del comando del motore**		nO
	Occorre che tutti i parametri motore (UnS, FrS, nCr, nSP, COS) siano correttamente configurati prima di procedere all'autotuning. nO: Autotuning non eseguito. YES: L'autotuning viene eseguito appena possibile, quindi il parametro passa automaticamente a dOnE o nO in caso di difetto (visualizzazione del difetto tnF). dOnE: Utilizzo dei valori forniti dal precedente autotuning. rUn: L'autotuning viene eseguito ad ogni ordine di marcia. POn: L'autotuning viene eseguito ad ogni messa sotto tensione. LI1 a LI6: L'autotuning viene eseguito al passaggio 0 ➜ 1 di un ingresso logico assegnato a questa funzione. **Attenzione**: L'autotuning viene eseguito solo se non è attivo alcun comando. L'autotuning può durare da 1 a 2 secondi. Non interromperne l'esecuzione ed attendere che la visualizzazione passi a "dOnE" o a "nO". ⚠ L'autotuning è effettuato alla corrente nominale motore.		
tUS	**Stato dell'autotuning** (parametro a carattere informativo**)**		tAb
	tAb: Il valore di default della resistenza statorica viene utilizzato per comandare il motore. PEnd: L'autotuning è stato richiesto ma non ancora effettuato. PrOG: Autotuning in corso. FAIL: L'autotuning non è riuscito. dOnE: La resistenza statorica misurata dalla funzione autotuning è utilizzata per comandare il motore.		
UFt	**Scelta del tipo di legge tensione / frequenza**		n
	L: Coppia costante per motori in parallelo o motori speciali P: Coppia variabile: applicazioni pompe e ventilatori n: Controllo vettoriale del flusso senza trasduttore per applicazioni a coppia costante nLd: Risparmio energetico, per applicazioni a coppia variabile senza necessità di dinamica importante (comportamento vicino alla legge P a vuoto e alla legge n in carico).		
nrd	**Frequenza di commutazione aleatoria**		YES
	YES: Frequenza con modulazione aleatoria nO : Frequenza fissa La modulazione di frequenza aleatoria evita gli eventuali rumori di risonanza che potrebbero verificarsi ad una frequenza fissa.		
SFr	**Frequenza di commutazione** (1)	da 2,0 a 16 kHz	4 kHz
	La frequenza è regolabile per ridurre il rumore generato dal motore. Se la frequenza è regolata ad oltre 4 kHz, in caso di surriscaldamento il variatore riduce automaticamente la frequenza di commutazione ripristinandola quando la temperatura torna normale.		
tFr	**Frequenza massima di uscita**	da 10 a 500 Hz	60 Hz
	La preregolazione di base è 60 Hz, sostituita da un valore di 72 Hz se bFr è impostato a 60 Hz		
SSL	**Eliminazione del filtro dell'anello di velocità**		nO
	nO: Il filtro dell'anello di velocità resta attivo (evita che venga superato il valore impostato). YES: Il filtro dell'anello di velocità è disattivato (per applicazioni con posizionamento comporta un tempo di risposta ridotto, con possibilità di superamento del valore impostato).		

(1) Parametro accessibile anche nel menu regolazione SEt-..

Cod.	Descrizione	Gamma di regolazione	Regolaz. di base
SCS	**Salvataggio della configurazione** (1)		nO
	nO: Funzione non attiva Str I: Effettua un salvataggio della configurazione in corso (tranne il risultato dell'autotuning) nella memoria EEPROM. Terminato il salvataggio SCS torna automaticamente a nO. Questa funzione consente di conservare una configurazione di riserva oltre alla configurazione in corso. Nei variatori all'uscita dalla fabbrica entrambe le configurazioni (in corso e di salvataggio) sono inizializzate alla configurazione di base.		
FCS	**Ritorno alla preregolazione di base/Richiamo configurazione** (1)		nO
	nO: Funzione non attiva rECI: La configurazione in corso diventa identica alla configurazione salvata precedentemente con SCS = Strl. rECI è visibile solo se à stato effettuato un salvataggio. Terminata questa operazione FCS torna automaticamente a nO. InI: La configurazione in corso diventa identica alla preregolazione di base. Terminata questa operazione FCS torna automaticamente a nO. ⚠ Per essere acquisiti rECI e InI richiedono una pressione prolungata (2 s) del tasto ENT.		

(1) SCS e FCS sono accessibili da diversi menu di configurazione, ma riguardano l'insieme di tutti i menu e parametri.

Menu Ingressi /uscite I-O-

I parametri possono essere modificati solo a motore fermo, senza ordine di marcia.

Cod.	Descrizione	Regolaz. di base
tCC	**Comando 2 fili / 3 fili (Tipo di comando)**	2C ATV31●●●●●●A: LOC
	Configurazione del comando: 2C = comando 2 fili 3C = comando 3 fili LOC = comando locale (RUN / STOP / RESET del variatore) solo per ATV31●●●●●●A. Comando 2 fili: Stato aperto o chiuso dell'ingresso che comanda la marcia o l'arresto. Comando 3 fili (Comando ad impulsi): un impulso "avanti" o "indietro" è sufficiente a comandare l'avviamento, un impulso "stop" è sufficiente a comandare l'arresto. Vedere il CD-rom. Sui variatori ATV31●●●●●●A, la riconfigurazione di tCC = 2C riassegna gli ingressi LI1 (marcia avanti) e LI2 (marcia indietro). Il pulsante RUN del variatore torna ad essere non attivo, ma il riferimento di velocità è sempre dato dal potenziometro. E' possibile disattivare il potenziometro e assegnare il riferimento di velocità all'ingresso analogico AI1, configurando il parametro Fr1 = AI1 nel menu CtL-. Vedere il CD-rom. ⚠ Per modificare la configurazione di tCC è necessaria una pressione prolungata (2 s) del tasto "ENT", che provoca il ritorno alla preregolazione di base delle funzioni: rrS, tCt e di tutte le funzioni che interessano gli ingressi logici.	

Cod.	Descrizione	Regolaz. di base
tCt	**Tipo di comando 2 fili** (parametro accessibile solo se tCC = 2C)	trn
	LEL: Lo stato 0 o 1 viene acquisito per la marcia o l'arresto. trn: Una modifica di stato (transizione o fronte) è necessaria per attivare la marcia allo scopo di evitare un riavviamento intempestivo in seguito ad un'interruzione dell'alimentazione. PFO: Lo stato 0 o 1 viene acquisito per la marcia o l'arresto, ma l'ingresso "marcia avanti" ha sempre priorità sull'ingresso "marcia indietro".	
rrS	**Marcia indietro mediante ingresso logico**	se tCC = 2C: LI2 se tCC = 3C: LI3 se tCC = LOC: nO
	Se rrS = nO la marcia indietro resta attiva, con tensione negativa su AI2 ad esempio. nO: Non configurato LI2: Ingresso logico LI2, accessibile se tCC = 2C LI3: Ingresso logico LI3, LI4: Ingresso logico LI4 LI5: Ingresso logico LI5 LI6: Ingresso logico LI6.	
CrL3 CrH3 AOIt dO r1 r2	Consultare il CD-rom	
SCS FCS	Identico al menu drC, pagina 76	

Menu Visualizzazione SUP-

I parametri sono accessibili sia in marcia che a motore fermo.

Alcune funzioni comprendono numerosi parametri. Per rendere chiara la programmazione ed evitare un fastidioso scorrimento dei parametri, le funzioni sono state raggruppate in sotto-menu.
I sotto-menu sono riconoscibili grazie al trattino posto alla destra del loro codice, come per i menu: LIF- ad esempio.

Quando il variatore è in funzione il valore visualizzato corrisponde al valore di uno dei parametri di controllo. Di default, il valore visualizzato è la frequenza di uscita applicata al motore (parametro rFr).

Quando a display è visualizzato il valore del nuovo parametro di controllo desiderato, è necessaria una seconda pressione prolungata (2 secondi) del tasto "ENT" per validare la modifica del parametro di controllo ed effettuarne il salvataggio. Da questo momento in poi sarà il valore di questo parametro ad essere visualizzato con motore in marcia (anche in seguito ad una messa fuori tensione).
Se la nuova scelta non viene confermata con una seconda pressione prolungata del tasto "ENT", alla messa fuori tensione si tornerà al parametro precedente.

Cod.	Descrizione	Gamma di variazione
LFr	**Riferimento frequenza per il comando tramite terminale integrato o terminale remotato**	da 0 a 500 Hz
rPI	**Riferimento interno PI**	da 0 a 100%

Questi parametri appaiono solo se la funzione è stata validata.

Cod.	Descrizione	Gamma di variazione
FrH	**Riferimento di frequenza impostato**	da 0 a 500 Hz
rFr	**Frequenza di uscita applicata al motore**	da - 500 Hz a + 500 Hz
SPd	**Frequenza di uscita in unità cliente**	
	Vedere CD-rom.	
LCr	**Corrente motore**	
OPr	**Potenza motore**	
	100 % = Potenza nominale del motore	
ULn	**Tensione rete** (fornisce la tensione rete misurata su bus DC, con motore a regime o fermo)	
tHr	**Stato termico motore**	
	100 % = Stato termico nominale 118 % = Soglia "OLF" (sovraccarico motore)	
tHd	**Stato termico variatore**	
	100 % = Stato termico nominale 118 % = Soglia "OHF" (sovraccarico variatore)	
LFt	**Ultimo difetto comparso**	
	Vedere Difetti - cause - procedure di intervento, pagina 79	
Otr	**Coppia motore**	
	100 % = coppia nominale del motore	
rtH	**Tempo di funzionamento**	da 0 a 65530 ore
	Tempo totale di messa sotto tensione del motore: da 0 a 9999 (ore), quindi da 10.00 a 65.53 (kiloore). Può essere resettato con il parametro rPr del menu FLt- (vedere cd-rom).	
COd	**Codice di blocco del terminale**	
	Vedere CD-rom	
tUS	**Stato dell'autotuning**	
	tAb: Il valore di default della resistenza statorica è utilizzato per comandare il motore. PEnd: L'autotuning è stato richiesto ma non ancora eseguito. PrOG: Autotuning in corso. FAIL: L'autotuning non è riuscito. dOnE: La resistenza statorica misurata dalla funzione autotuning è utilizzata per comandare il motore	
UdP	**Visualizzazione della versione software dell'ATV31**	
	Es.: 1102 = V1.1 IE02.	
L IA-	**Funzioni degli ingressi logici**	
	Vedere CD-rom.	
A IA-	**Funzioni degli ingressi analogici**	
	Vedere CD-rom.	

Difetti - cause - procedure di intervento

Assistenza alla manutenzione, visualizzazione di difetto

In caso di anomalia alla messa in servizio o in fase di impiego, accertarsi per prima cosa che siano state rispettate le indicazioni fornite riguardo alle condizioni ambientali, al montaggio ed ai collegamenti.

Il primo difetto rilevato viene memorizzato e visualizzato sul display lampeggiante: il variatore si blocca e il contatto del relè di difetto (R1 nella preregolazione di base) si apre.

Mancato avviamento senza segnalazione di difetto

- Se non viene segnalato alcun errore, verificare che il variatore sia correttamente alimentato.
- Altri casi: consultare il cd-rom.

Difetti da riarmare

Lo sblocco del variatore in seguito ad un difetto si effettua tramite messa fuori tensione dello stesso fino allo spegnimento completo del display con successiva rialimentazione del variatore.

Difetto	Causa possibile	Procedura d'intervento
COF difetto CANopen	• interruzione della comunicazione su bus CANopen	• Verificare il bus di comunicazione. • Consultare la documentazione specifica.
CrF circuito di carica condensatori	• difetto di comando del relè di carica o resistenza di carica deteriorata	• Sostituire il variatore.
EEF difetto EEprom	• difetto della memoria interna	• Verificare le condizioni ambientali (compatibilità elettromagnetica) • Sostituire il variatore
InF difetto interno	• difetto interno	• Verificare le condizioni ambientali (compatibilità elettromagnetica). • Sostituire il variatore.
LFF interruzione 4-20 mA	• perdita riferimento 4-20 mA sull'ingresso AI3	• Verificare il collegamento sull'ingresso AI3.
ObF sovratensione in decelerazione	• frenatura troppo brutale • carico trascinante	• Aumentare il tempo di decelerazione. • Aggiungere una resistenza di frenatura se necessario. • Vedere la funzione brA (vedere cd-rom).
OCF sovracorrente	• Parametri dei menu SEt- e drC- non corretti • inerzia o carico eccessivo • blocco meccanico	• Verificare i parametri di SEt- e drC-. • Verificare il dimensionamento motore/variatore/ carico. • Verificare lo stato della meccanica.
OHF sovraccarico variatore	• temperatura variatore troppo elevata	• Controllare il carico motore, la ventilazione variatore e le condizioni ambientali. Attendere il raffreddamento per riavviare.
OLF sovraccarico motore	• sgancio termico per corrente motore troppo elevata	• Verificare le regolazione ItH (pagina 72) della protezione termica motore, controllare il carico del motore. Attendere il raffreddamento per riavviare.

Difetto	Causa possibile	Procedura d'intervento
OPF interruzione fase motore	• interruzione di una fase in uscita variatore • contattore a valle aperto • motore non collegato o di potenza troppo bassa • instabilità istantanea della corrente motore	• Verificare i collegamenti del variatore al motore • In caso di utilizzo di un contattore a valle configurare OPL a OAC (vedere cd-rom, menu FLt-). • Prova su motore di potenza ridotta o senza motore: configurare OPL a nO (vedere cd-rom, menu FLt-). • Verificare e ottimizzare i parametri UFr (pagina 72), UnS e nCr (pagina 74), ed eseguire un autotuning con tUn (pagina 75).
OSF sovratensione	• tensione rete troppo elevata • rete disturbata	• Verificare la tensione rete.
PHF interruzione fase rete	• interruzione di una fase • utilizzo su rete monofase di un ATV31 trifase • carico con squilibrio Protezione che funziona solo con motore caricato	• Verificare il collegamento e i fusibili. • Utilizzare una rete trifase. • Inibire il difetto con IPL = nO (vedere cd-rom)
SCF cortocircuito motore	• cortocircuito o messa a terra in uscita del variatore • corrente di fuga rilevante a terra in uscita dal variatore in caso di più motori in parallelo.	• Verificare i cavi di collegamento del varia-tore al motore, e l'isolamento del motore. • Ridurre la frequenza di commutazione. • Aggiungere delle induttanze in serie con il motore.
SLF difetto Modbus	• interruzione della comunicazione su bus Modbus	• Verificare il bus di comunicazione. • Consultare la documentazione specifica.
SOF sovravelocità	• instabilità • carico trascinante eccessivo	• Verificare i parametri motore, guadagno e stabilità. • Aggiungere una resistenza di frenatura. • Verificare il dimensionamento motore / variatore / carico.
tnF errore autotuning	• motore speciale o motore di potenza non adatta al variatore • motore non collegato al variatore	• Utilizzare la legge L o la legge P (UFt pagina 75). • Verificare la presenza del motore in fase di autotuning. • In caso di utilizzo di un contattore a valle, chiuderlo durante l'autotuning.

Difetti riarmati automaticamente all'eliminazione della causa

Difetto	Causa possibile	Procedura d'intervento
CFF difetto configurazione	• la configurazione in corso non è coerente.	• Ripristinare la preregolazione di base o richiamare la configurazione di salvataggio se valida. Vedere parametro FCS del menu drC- pagina 76.
CFI difetto configurazione collegamento seriale	• configurazione non valida (la configurazione caricata nel variatore tramite collegamento seriale non è coerente)	• Verificare la configurazione precedentemente caricata. • Caricare una configurazione coerente.
USF sotto-tensione	• rete troppo bassa • abbassamento di tensione temporaneo • resistenza di carica usurata	• Verificare la tensione e il parametro tensione. • Sostituire il variatore.

VVDED303043

064940

W9 1624580 01 11 A01

2003-09

Altivar 31

Programming manual

Variable speed drives
for asynchronous motors

a brand of Schneider Electric

Telemecanique

Contents

Warnings 2
Steps for setting up the starter 3
Factory configuration 4
Basic functions 5
Setup - Preliminary recommendations 7
Functions of the display and the keys 8
Remote terminal option 10
Programming 11
Function compatibility 13
List of functions which can be assigned to inputs/outputs 14
Settings menu SEt- 16
Motor control menu drC- 20
I/O menu I-O- 23
Control menu CtL- 26
Application functions menu FUn- 37
Fault menu FLt- 60
Communication menu COM- 63
Display menu SUP- 64
Maintenance 67
Faults - Causes - Remedies 68
Configuration/Settings table 70
Index of parameter codes 74
Index of functions 75

NOTE: Please also refer to the "Installation Guide".

Warnings

When the drive is powered up, the power components and some of the control components are connected to the line supply. It is extremely dangerous to touch them. *The drive cover must be kept closed.*

In general, the drive power supply must be disconnected before any operation on either the electrical or mechanical parts of the installation or *machine.*
After the ALTIVAR has been switched off and the display has disappeared completely, *wait for 10 minutes before working on the equipment*. This is the time required for the capacitors to discharge.
The motor can be stopped during operation by inhibiting start commands or the speed reference while the drive remains powered up. If personnel safety requires prevention of sudden restarts, this electronic locking system is not sufficient: *fit a cut-off on the power circuit.*

The drive is fitted with safety devices which, in the event of a fault, can shut down the drive and consequently the motor. The motor itself may be stopped by a mechanical blockage. Finally, voltage variations, especially line supply failures, can also cause shutdowns.
If the cause of the shutdown disappears, there is a risk of restarting which may endanger certain machines or installations, especially those which must conform to safety regulations.

In this case the user must take precautions against the possibility of restarts, in particular by using a low speed detector to cut off power to the drive if the motor performs an unprogrammed shutdown.

The drive must be installed and set up in accordance with both international and national standards. Bringing the device into conformity is the responsibility of the systems integrator who must observe the EMC directive among others within the European Union.
The specifications contained in this document must be applied in order to comply with the essential requirements of the EMC directive.

The Altivar 31 must be considered as a component: it is neither a machine nor a device ready for use in accordance with European directives (machinery directive and electromagnetic compatibility directive). It is the responsibility of the end user to ensure that the machine meets these standards.

The drive must not be used as a safety device for machines posing a potential risk of material damage or personal injury (lifting equipment, for example). In such applications, overspeed checks and checks to ensure that the trajectory remains under constant control must be made by separate devices which are independent of the drive.

The products and equipment described in this document may be changed or modified at any time, either from a technical point of view or in the way they are operated. Their description can in no way be considered contractual.

Steps for setting up the starter

1 - Delivery of the drive

- Check that the drive reference printed on the label is the same as that on the delivery note corresponding to the purchase order.
- Remove the Altivar 31 from its packaging and check that it has not been damaged in transit.

2 - Check that the line voltage is compatible with the supply voltage range of the drive

(see the ATV 31Installation Manual).

- The drive may be damaged if the line voltage is not compatible.

3 - Fit the drive

4 - Connect the following to the drive:

- The line supply, ensuring that it is:
  - **compatible with the voltage range of the drive**
  - **switched off**
- The motor, ensuring that its coupling corresponds to the line voltage
- The control via the logic inputs
- The speed reference via the logic or analog inputs

5 - Switch on the drive, but do not give a run command

6 - Configure the following:

The nominal frequency (bFr) of the motor, if it is different from 50 Hz.

7 - Configure the following in the drC- menu:

The motor parameters, only if the factory configuration of the drive is not suitable.

8 - Configure the following in the I-O-, CtL- and FUn- menus:

The application functions (only if the factory configuration of the drive is not suitable), for example the control mode: 3-wire, or 2-wire transition detection, or 2-wire level detection, or 2-wire level detection with forward direction priority, or local control for ATV31●●●A.

The user must ensure that the programmed functions are compatible with the wiring diagram used.

9 - Set the following in the SEt- menu:

- The ACC (Acceleration) and dEC (Deceleration) parameters
- The LSP (Low speed when the reference is zero) and HSP (High speed when the reference is maximum) parameters
- The ItH parameter (Motor thermal protection)

10 - Start the drive

Practical recommendations

- Preparations can be made for programming the drive by filling in the configuration and settings tables (see page 70), in particular when the factory configuration has to be changed.
- It is always possible to **return to the factory settings** using the FCS parameter in the drC-, I-O-, CtL- and FUn- menus (set InI to activate the function, see page 22, 25, 36 or 59).
- Auto-tuning, which is performed using the drC- menu, can be applied to optimize performance in terms of accuracy and response time. Auto-tuning measures the stator resistance of the motor in order to optimize the control algorithms.

Factory configuration

Factory settings

The Altivar 31 is factory-set for the most common operating conditions:
- Display: Drive ready (rdY) with motor stopped, and motor frequency with motor running
- Motor frequency (bFr): 50 Hz
- Constant torque application with sensorless flux vector control (UFt = n)
- Normal stop mode on deceleration ramp (Stt = rMP).
- Stop mode in the event of a fault: Freewheel
- Linear ramps (ACC, dEC): 3 seconds
- Low speed (LSP): 0 Hz
- High speed (HSP): 50 Hz
- Motor thermal current (ItH) = nominal motor current (value depending on drive rating)
- Standstill injection braking current (SdC) = 0.7 x nominal drive current, for 0.5 seconds
- Automatic adaptation of the deceleration ramp in the event of overvoltage on braking
- No automatic restarting after a fault
- Switching frequency 4 kHz
- Logic inputs:
  - LI1, LI2 (2 directions of operation): 2-wire transition detection control, LI1 = forward, LI2 = reverse, inactive on ATV 31●●●●●●A drives (not assigned)
  - LI3, LI4: 4 preset speeds (speed 1 = speed reference or LSP, speed 2 = 10 Hz, speed 3 = 15 Hz, speed 4 = 20 Hz).
  - LI5 - LI6: Inactive (not assigned)
- Analog inputs:
  - AI1: Speed reference 0-10 V, inactive on ATV 31●●●●●●A (not assigned)
  - AI2: Summed speed reference input 0±10 V
  - AI3: 4-20 mA inactive (not assigned)
- Relay R1: The contact opens in the event of a fault (or drive off)
- Relay R2: Inactive (not assigned)
- Analog output AOC: 0-20 mA inactive (not assigned)

ATV 31●●●●●●A range

When they leave the factory, ATV 31●●●●●●A drives are supplied with local control activated: the RUN, STOP buttons and the drive potentiometer are active. Logic inputs LI1 and LI2 and analog input AI1 are inactive (not assigned).

If the above values are compatible with the application, the drive can be used without changing the settings.

Drive thermal protection

Functions:

Thermal protection by PTC probe fitted on the heatsink or integrated in the power module.
Indirect protection of the drive against overloads by tripping in the event of an overcurrent. Typical tripping points:

- Motor current = 185% of nominal drive current: 2 seconds
- Motor current = 150% of nominal drive current: 60 seconds

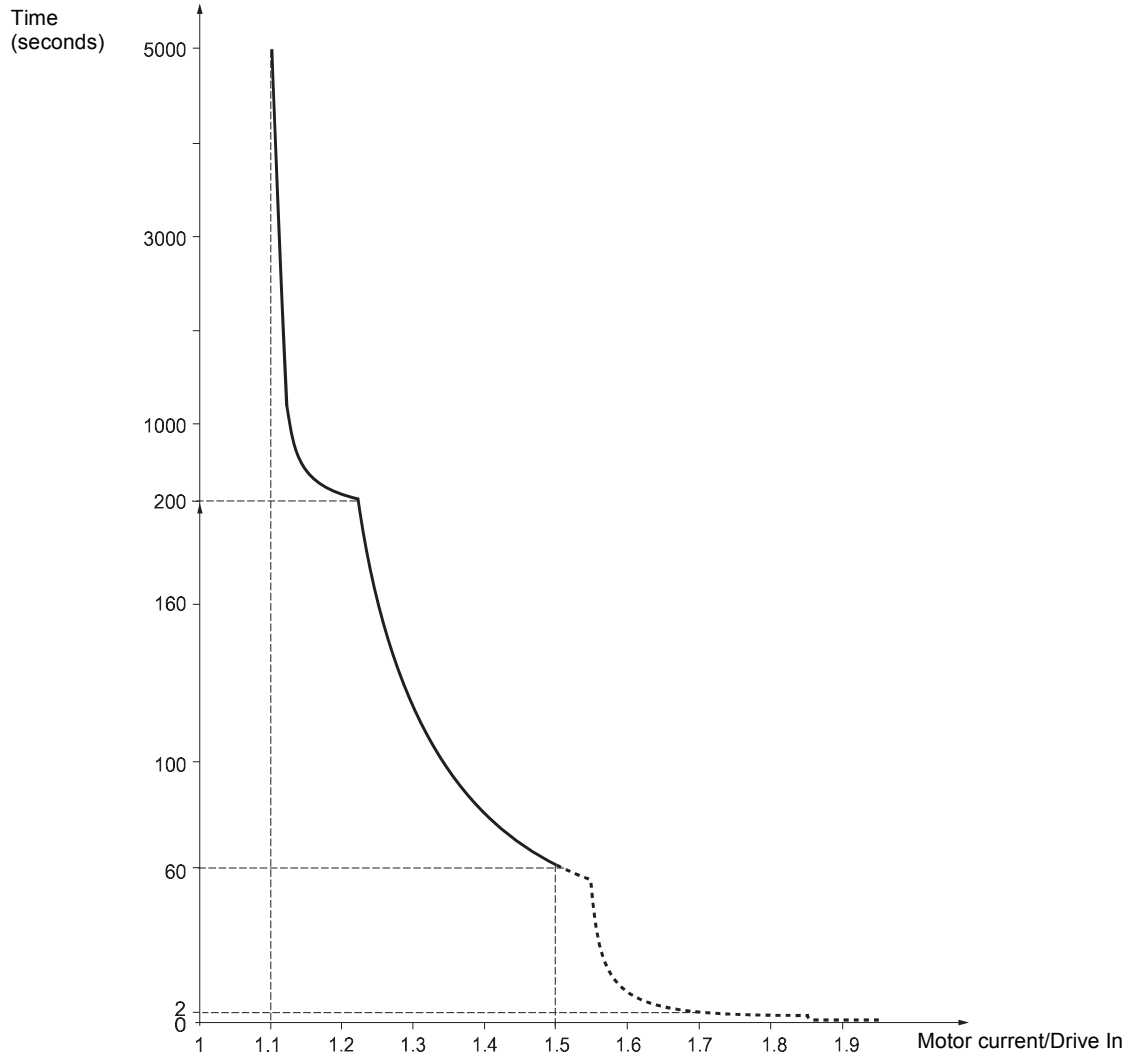

Drive ventilation

The fan starts up when the drive is powered up then shuts down after 10 seconds if a run command has not been received.
The fan is powered automatically when the drive is unlocked (operating direction + reference). It is powered down a few seconds after the drive is locked (motor speed < 0.2 Hz and injection braking completed).

Motor thermal protection

Function:

Thermal protection by calculating the I^2t.
The protection takes account of self-cooled motors.

Caution: The memory of the motor thermal state returns to zero when the drive is disconnected.

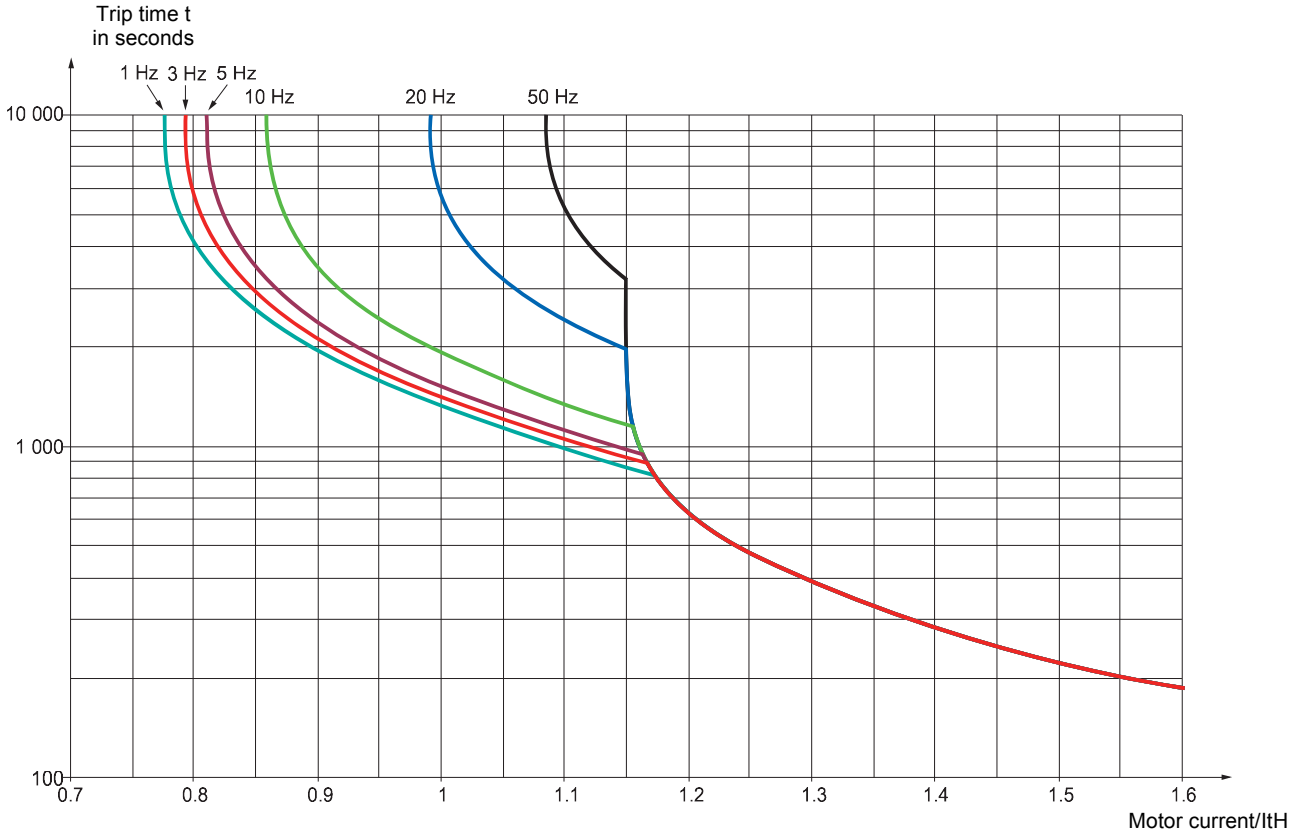

Setup - Preliminary recommendations

Prior to switching on and configuring the drive

- **Check that the line voltage is compatible with the supply voltage range of the drive (see pages 3 and 4 of the ATV 31 Installation Manual). The drive may be damaged if the line voltage is not compatible.**
- **Ensure the logic inputs are switched off (state 0) to prevent accidental starting. Otherwise, an input assigned to the run command may cause the motor to start immediately on exiting the configuration menus.**

With power switching via line contactor

- **Avoid operating the contactor frequently (premature ageing of the filter capacitors). Use inputs LI1 to LI6 to control the drive.**
- **These instructions are vital for cycles < 60 s, otherwise the load resistor may be damaged.**

User adjustment and extension of functions

If necessary, the display and buttons can be used to modify the settings and to extend the functions described in the following pages. It is very easy to **return to the factory settings** using the FCS parameter in the drC-, I-O-, CtL- and FUn- menus (set InI to activate the function, see page 22, 25, 36 or 59).
There are three types of parameter:
- Display: Values displayed by the drive
- Setting: Can be changed during operation or when stopped
- Configuration: Can only be modified when stopped and no braking is taking place. Can be displayed during operation.

- **Check that changes to the current operating settings do not present any danger. Changes should preferably be made with the drive stopped.**

Start up

Important: In factory settings mode on power-up, or in a manual fault reset or after a stop command, the motor can only be powered once the "forward", "reverse" and "DC injection stop" commands have been reset. If they have not been reset, the drive will display "nSt" but will not start. If the automatic restart function is configured (parameter Atr in the FLt- menu, see page 60), these commands are taken into account without a reset being necessary.

Test on a low power motor or without a motor

- In factory settings mode, "motor phase loss" detection is active (OPL = YES). To check the drive in a test or maintenance environment without having to switch to a motor with the same rating as the drive (particularly useful in the case of high power drives), deactivate "motor phase loss" detection (OPL = NO).
- Configure the voltage/frequency ratio: UFt = L (drC- menu on page 21)

- Motor thermal protection will not be provided by the drive if the motor current is less than 0.2 times the nominal drive current.

Using motors in parallel

- Configure the voltage/frequency ratio: UFt = L (drC- menu on page 21)

- Motor thermal protection is no longer provided by the drive. Provide an alternative means of thermal protection on every motor.

Functions of the display and the keys

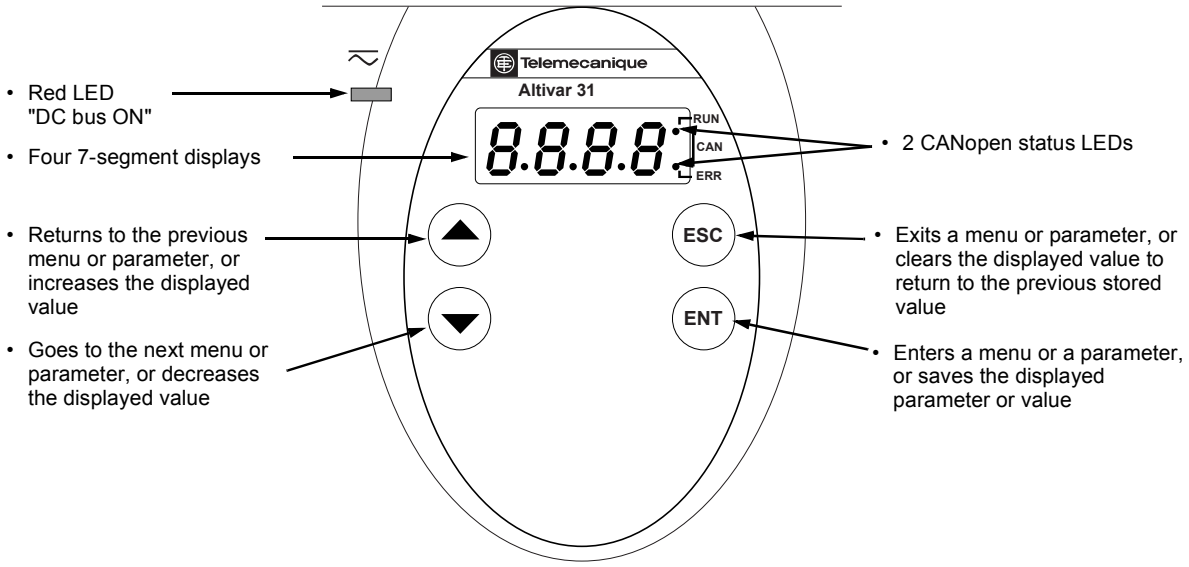

• Pressing ▲ or ▼ does not store the selection.

• Press and hold down (>2 s) ▲ or ▼ to scroll through the data quickly.

To save and store the selection: ENT

The display flashes when a value is stored.

Normal display, with no fault present and no starting:

- 43.0: Display of the parameter selected in the SUP- menu (default selection: motor frequency). In current limit mode, the display flashes.
- init: Initialization sequence
- rdY: Drive ready
- dcb: DC injection braking in progress
- nSt: Freewheel stop
- FSt: Fast stop
- tUn: Auto-tuning in progress

The display flashes to indicate the presence of a fault.

Functions of the display and the keys

ATV31●●●●●●A:

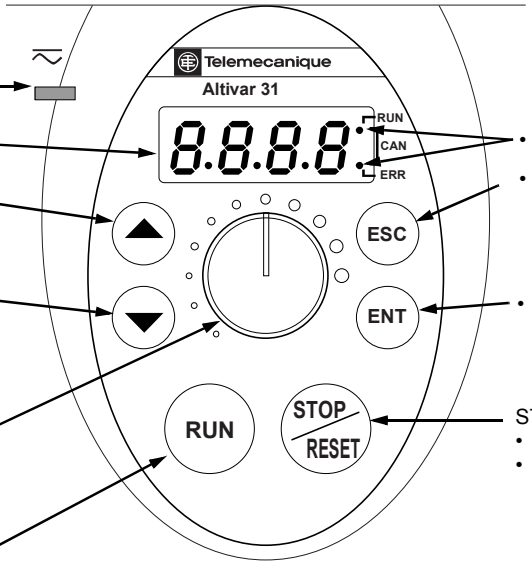

- Red LED "DC bus ON"
- Four 7-segment displays
- Returns to the previous menu or parameter, or increases the displayed value
- Goes to the next menu or parameter, or decreases the displayed value
- Reference potentiometer, active if the Fr1 parameter in the CtL- menu is configured as AIP
- RUN button: Controls motor switch-on in forward mode, if parameter tCC in the I-O- menu is configured as LOC

- 2 CANopen status LEDs
- Exits a menu or a parameter, or clears the displayed value to return to the previous stored value
- Enters a menu or a parameter, or saves the displayed parameter or value

STOP/RESET button
- Used to reset faults
- Can be used to control motor stopping
  - If tCC (I-O- menu) is not configured as LOC, it is a freewheel stop.
  - If tCC (I-O- menu) is configured as LOC, stopping is on a ramp, but if injection braking is in progress, a freewheel stop takes place.

• Pressing ▲ or ▼ does not store the selection.

• Press and hold down (>2 s) ▲ or ▼ to scroll through the data quickly.

To save and store the selection: ENT

The display flashes when a value is stored.

Normal display, with no fault present and no starting:
- 43.0: Display of the parameter selected in the SUP- menu (default selection: output frequency applied to the motor). In current limit mode, the display flashes.
- init: Initialization sequence
- rdY: Drive ready
- dcb: DC injection braking in progress
- nSt: Freewheel stop
- FSt: Fast stop
- tUn: Auto-tuning in progress

The display flashes to indicate the presence of a fault.

Remote terminal option

This module is a local control unit which can be mounted on the door of the wall-mounted or floor-standing enclosure. It has a cable with connectors, which is connected to the drive serial link (see the manual supplied with the terminal). It has the same display and the same programming buttons as the Altivar 31 with the addition of a switch to lock access to the menus and three buttons for controlling the drive:
- FWD/REV: reversal of the direction of rotation
- RUN: motor run command
- STOP/RESET: Motor stop command or fault reset

Pressing the button a first time stops the motor, and if DC injection standstill braking is configured, pressing it a second time stops this braking.

View of the front panel:

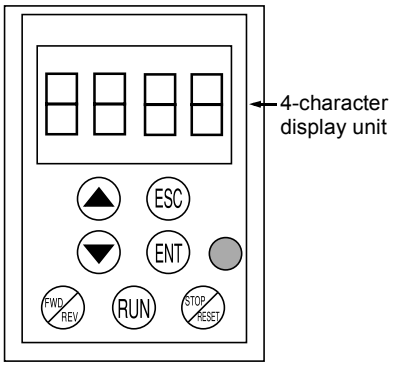

View of the rear panel:

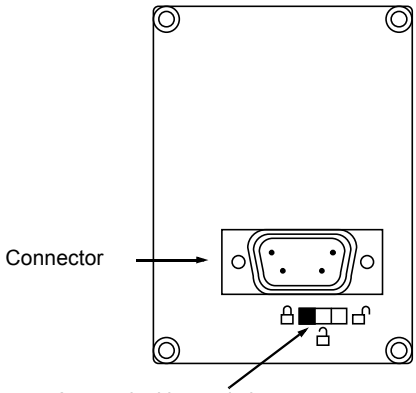

- positions: settings and display accessible (SEt- and SUP- menus)
- position: all menus can be accessed

Note: Customer password protection has priority on the switch.

- The access locking switch on the remote terminal also prevents the drive settings being accessed via the keypad.
- When the remote terminal is disconnected, if the drive has been locked, the keypad will remain locked.
- In order for the remote terminal to be active, the tbr parameter in the COM- menu must remain in factory settings mode: 19.2 (see page 73).

Saving and loading configurations

Up to four complete configurations for ATV 31 drives can be stored on the remote terminal. These configurations can be saved, transported and transferred from one drive to another of the same rating. 4 different operations for the same device can also be stored on the terminal. See the SCS and FCS parameters in the drC-, I-O-, CtL- and FUn- menus.

Access to menus

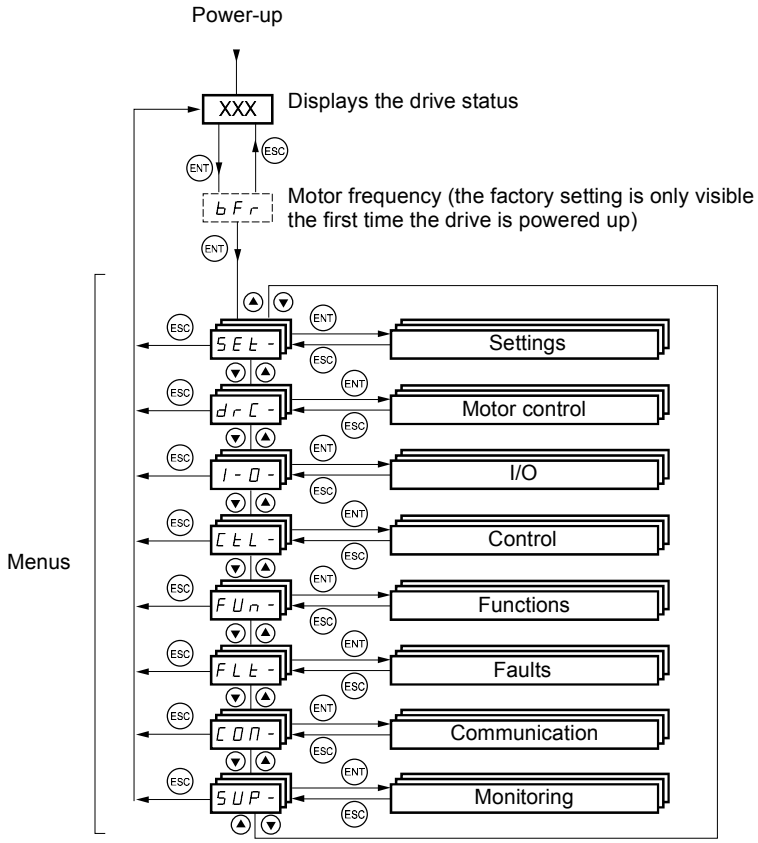

Some parameters can be accessed in a number of menus for increased user-friendliness:
- Entering settings
- Return to factory settings
- Restoring and saving the configuration

A dash appears after menu and sub-menu codes to differentiate them from parameter codes.
Examples: FUn- menu, ACC parameter.

Accessing menu parameters

To save and store the selection: ENT

The display flashes when a value is stored.
Example:

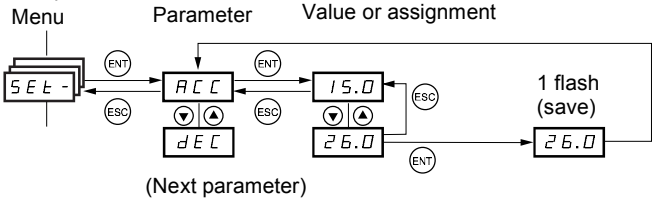

All the menus are "drop-down" type menus, which means that after the last parameter, if you continue to press ▼, you will return to the first parameter and, conversely, you can switch from the first parameter to the last parameter by pressing ▲.

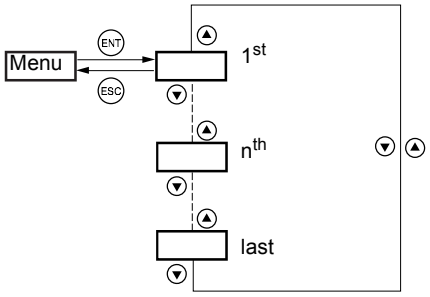

If, after modifying any of the parameters (n^{th}), you quit a menu and return to this menu without having accessed another menu in the meantime, you will be taken directly to the nth parameter (see below). If, in the meantime, you have accessed another menu or have restarted the system, you will always be taken to the first parameter in the menu (see above).

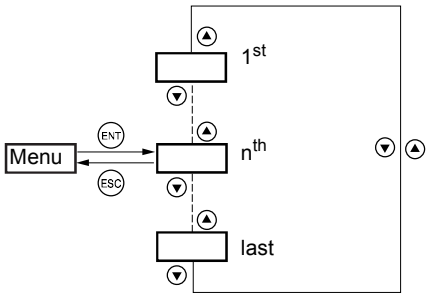

Configuration of the bFr parameter

This parameter can only be modified in stop mode without a run command.

bFr

Code	Description	Adjustment range	Factory setting
bFr	**Standard motor frequency**		50
	This parameter is only visible the first time the drive is switched on. It can be modified at any time in the drC- menu. 50 Hz: IEC 60 Hz: NEMA This parameter modifies the presets of the following parameters: HSP page 16, Ftd page 19, FrS page 20 and tFr page 22.		

Function compatibility

Incompatible functions

The following functions will be inaccessible or deactivated in the cases described below:

Automatic restart

This is only possible for 2-wire level detection control (tCC = 2C and tCt = LEL or PFO).

Flying restart

This is only possible for 2-wire level detection control (tCC = 2C and tCt = LEL or PFO).
This function is locked if automatic standstill injection is configured as DC (AdC = Ct).

Reverse

On the ATV31●●●A range only, this function is locked if local control is active (tCC = LOC).

Function compatibility table

The choice of application functions may be limited by the number of I/O and by the fact that some functions are incompatible with one another. Functions which are not listed in this table are fully compatible.
If there is an incompatibility between functions, the first function configured will prevent the remainder being configured.

	Summing inputs	+/- speed (1)	Management of limit switches	Preset speeds	PI regulator	Jog operation	Brake sequence	DC injection stop	Fast stop	Freewheel stop
Summing inputs		●		↑	●	↑				
+/- speed (1)	●			●	●	●				
Management of limit switches					●					
Preset speeds	←	●			●	↑				
PI regulator	●	●	●	●		●	●			
Jog operation	←	●		←	●		●			
Brake sequence					●	●		●		
DC injection stop							●			↑
Fast stop										↑
Freewheel stop								←	←	

(1) Excluding special application with reference channel Fr2 (see diagrams 28 and 30)

● Incompatible functions Compatible functions Not applicable

Priority functions (functions which cannot be active simultaneously):

← ↑ The function indicated by the arrow has priority over the other.

Stop functions have priority over run commands.
Speed references via logic command have priority over analog references.

⚠ Logic and analog input application functions

Each of the functions on the following pages can be assigned to one of the inputs.
A single input can activate several functions at the same time (reverse and 2nd ramp for example). **The user must therefore ensure that these functions are compatible**.

The SUP- display menu (parameters LIA and AIA on page 66) can be used to display the functions assigned to each input in order to check their compatibility.

List of functions which can be assigned to inputs/outputs

Logic inputs	Page	Code	Factory setting	
			ATV31●●●	ATV31●●●A
Not assigned	-	-	LI5 - LI6	LI1 - LI2 LI5 - LI6
Forward	-	-	LI1	
2 preset speeds	44	PS2	LI3	LI3
4 preset speeds	44	PS4	LI4	LI4
8 preset speeds	44	PS8		
16 preset speeds	45	PS16		
2 preset PI references	51	Pr2		
4 preset PI references	51	Pr4		
+ speed	48	USP		
- speed	48	dSP		
Jog operation	46	JOG		
Ramp switching	38	rPS		
Switching for 2nd current limit	55	LC2		
Fast stop via logic input	39	FSt		
DC injection via logic input	39	dCI		
Freewheel stop via logic input	40	nSt		
Reverse	23	rrS	LI2	
External fault	61	EtF		
RESET (fault reset)	60	rSF		
Forced local mode	63	FLO		
Reference switching	34	rFC		
Control channel switching	35	CCS		
Motor switching	56	CHP		
Limiting of forward motion (limit switch)	58	LAF		
Limiting of reverse motion (limit switch)	58	LAr		
Fault inhibit	62	InH		

Analog inputs	Page	Code	Factory setting	
			ATV31●●●	ATV31●●●A
Not assigned	-	-	AI3	AI1 - AI3
Reference 1	33	Fr1	AI1	AIP (potentiometer)
Reference 2	33	Fr2		
Summing input 2	42	SA2	AI2	AI2
Summing input 3	42	SA3		
PI regulator feedback	51	PIF		

Analog/logic output	Page	Code	Factory setting
Not assigned	-	-	AOC/AOV
Motor current	24	OCr	
Motor frequency	24	rFr	
Motor torque	24	OLO	
Power supplied by the drive	24	OPr	
Drive fault (logic data)	24	FLt	
Drive running (logic data)	24	rUn	
Frequency threshold reached (logic data)	24	FtA	
High speed (HSP) reached (logic data)	24	FLA	
Current threshold reached (logic data)	24	CtA	
Frequency reference reached (logic data)	24	SrA	
Motor thermal threshold reached (logic data)	24	tSA	
Brake sequence (logic data)	54	bLC	

List of functions which can be assigned to inputs/outputs

Relay	Page	Code	Factory setting
Not assigned	-	-	R2
Drive fault	24	FLt	R1
Drive running	24	rUn	
Frequency threshold reached	24	FtA	
High speed (HSP) reached	24	FLA	
Current threshold reached	24	CtA	
Frequency reference reached	24	SrA	
Motor thermal threshold reached	24	tSA	
Brake sequence	54	bLC	

Settings menu SEt-

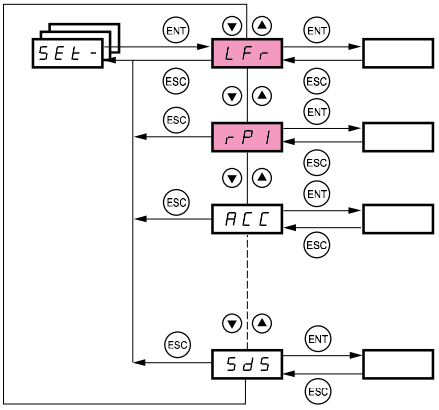

Speed reference via the terminal

Spd parameter scale factor

The adjustment parameters can be modified with the drive running or stopped.

Check that it is safe to make changes during operation. Changes should preferably be made in stop mode.

These parameter appear regardless of how the other menus have been configured.

These parameters only appear if the corresponding function has been selected in another menu. When the corresponding function is also accessible and adjustable from within the configuration menu, to aid programming their description is detailed in these menus, on the pages indicated.

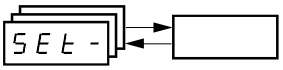

Code	Description		Adjustment range	Factory setting
LFr	**Speed reference via the remote terminal**		0 to HSP	
	This parameter appears if LCC = YES (page 35) or if Fr1/Fr2 = LCC (page 33), and if the remote terminal is online. In this case, LFr can also be accessed via the drive keypad. LFr is reset to 0 when the drive is powered down.			
rPI	**Internal PI regulator reference**	See page 51	0.0 to 100%	0
ACC	**Acceleration ramp time**		0.1 to 999.9 s	3 s
	Defined as the acceleration time between 0 and the nominal frequency FrS (parameter in the drC- menu).			
AC2	**2nd acceleration ramp time**	See page 38	0.1 to 999.9 s	5 s
dE2	**2nd deceleration ramp time**	See page 38	0.1 to 999.9 s	5 s
dEC	**Deceleration ramp time**		0.1 to 999.9 s	3 s
	Defined as the deceleration time between the nominal frequency FrS (parameter in the drC- menu) and 0. Check that the value of dEC is not too low in relation to the load to be stopped.			
tA1	**Start of CUS-type acceleration ramp rounded as % of total ramp time (ACC or AC2)**	See page 37	0 to 100	10%
tA2	**End of CUS-type acceleration ramp rounded as % of total ramp time (ACC or AC2)**	See page 37	0 to (100-tA1)	10%
tA3	**Start of CUS-type deceleration ramp rounded as % of total ramp time (dEC or dE2)**	See page 37	0 to 100	10%
tA4	**End of CUS-type deceleration ramp rounded as % of total ramp time (dEC or dE2)**	See page 37	0 to (100-tA3)	10%
LSP	**Low speed**		0 to HSP	0 Hz
	(Motor frequency at min. reference)			
HSP	**High speed**		LSP to tFr	bFr
	(Motor frequency to max. reference): Check that this setting is suitable for the motor and the application.			
ItH	**Motor thermal protection - max. thermal current**		0.2 to 1.5 In (1)	According to drive rating
	Set ItH to the nominal current on the motor rating plate. Please refer to OLL on page 61 if you wish to suppress thermal protection.			

(1) In corresponds to the nominal drive current indicated in the Installation Manual and on the drive rating plate.

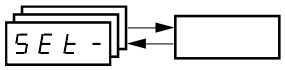

Code	Description		Adjustment range	Factory setting
UFr	**IR compensation/voltage boost**		0 to 100%	20
	- For UFt (page 21) = n or nLd: IR compensation - For UFt = L or P: Voltage boost Used to optimize the torque at very low speed (increase UFr if the torque is insufficient). Check that the value of UFr is not too high for when the motor is warm (risk of instability). ⚠ Modifying UFt (page 21) will cause UFr to return to the factory setting (20%).			
FLG	**Frequency loop gain**		1 to 100%	20
	Parameter can only be accessed if UFt (page 21) = n or nLd. The FLG parameter adjusts the drive's ability to follow the speed ramp based on the inertia of the machine being driven. Too high a gain may result in operating instability. 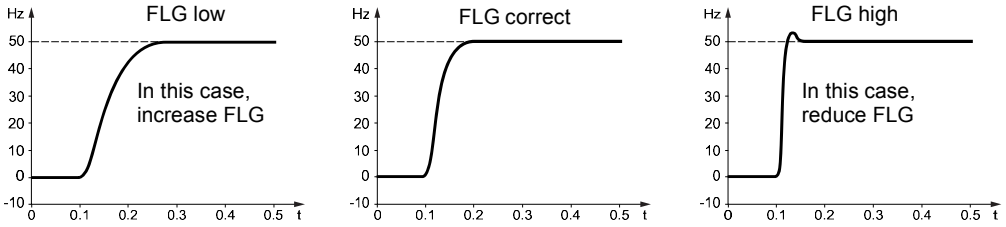			
StA	**Frequency loop stability**		1 to 100%	20
	Parameter can only be accessed if UFt (page 21) = n or nLd. Used to adapt the return to steady state after a speed transient (acceleration or deceleration), according to the dynamics of the machine. Gradually increase the stability to avoid any overspeed. 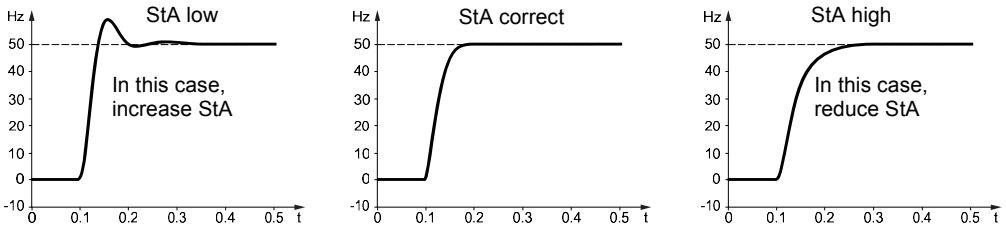			
SLP	**Slip compensation**		0 to 150%	100
	Parameter can only be accessed if UFt (page 21) = n or nLd. Used to adjust the slip compensation value fixed by nominal motor speed. The speeds given on motor rating plates are not necessarily exact. • If slip setting < actual slip: the motor is not rotating at the correct speed in steady state. • If slip setting > actual slip: the motor is overcompensated and the speed is unstable.			
IdC	**Level of DC injection braking current activated via logic input or selected as stop mode** (2).	See page 39	0 to In (1)	0.7 In (1)
tdC	**Total DC injection braking time selected as stop mode** (2).	See page 39	0.1 to 30 s	0.5 s
tdC1	**Automatic standstill DC injection time**	See page 41	0.1 to 30 s	0.5 s
SdC1	**Level of automatic standstill DC injection current**	See page 41	0 to 1.2 In (1)	0.7 In (1)
tdC2	**2nd automatic standstill DC injection time**	See page 41	0 to 30 s	0 s
SdC2	**2nd level of standstill DC injection current**	See page 41	0 to 1.2 In (1)	0.5 In (1)

(1) In corresponds to the nominal drive current indicated in the Installation Manual and on the drive rating plate.
(2) Caution: These settings are not related to the "automatic standstill DC injection" function.

These parameters only appear if the corresponding function has been selected in another menu. When the corresponding function is also accessible and adjustable from within the configuration menu, to aid programming their description is detailed in these menus, on the pages indicated.
Those which are underlined appear in factory settings mode.

Settings menu SEt-

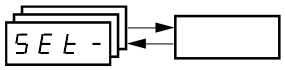

Code	Description		Adjustment range	Factory setting
JPF	**Skip frequency**		0 to 500	0 Hz
	Prevents prolonged operation at a frequency range of ± 1 Hz around JPF. This function prevents a critical speed which leads to resonance. Setting the function to 0 renders it inactive.			
JF2	**2nd skip frequency**		0 to 500	0 Hz
	Prevents prolonged operation at a frequency range of ± 1 Hz around JF2. This function prevents a critical speed which leads to resonance. Setting the function to 0 renders it inactive.			
JGF	**Jog operating frequency**	See page 46	0 to 10 Hz	10 Hz
rPG	**PI regulator proportional gain**	See page 51	0.01 to 100	1
rIG	**PI regulator integral gain**	See page 51	0.01 to 100/s	1/s
FbS	**PI feedback multiplication coefficient**	See page 51	0.1 to 100	1
PIC	**Reversal of the direction of correction of the PI regulator**	See page 51	nO - YES	nO
rP2	**2nd preset PI reference**	See page 51	0 to 100%	30%
rP3	**3rd preset PI reference**	See page 51	0 to 100%	60%
rP4	**4th preset PI reference**	See page 51	0 to 100%	90%
SP2	**2nd preset speed**	See page 45	0 to 500 Hz	10 Hz
SP3	**3rd preset speed**	See page 45	0 to 500 Hz	15 Hz
SP4	**4th preset speed**	See page 45	0 to 500 Hz	20 Hz
SP5	**5th preset speed**	See page 45	0 to 500 Hz	25 Hz
SP6	**6th preset speed**	See page 45	0 to 500 Hz	30 Hz
SP7	**7th preset speed**	See page 45	0 to 500 Hz	35 Hz
SP8	**8th preset speed**	See page 45	0 to 500 Hz	40 Hz
SP9	**9th preset speed**	See page 45	0 to 500 Hz	45 Hz
SP10	**10th preset speed**	See page 45	0 to 500 Hz	50 Hz
SP11	**11th preset speed**	See page 45	0 to 500 Hz	55 HZ
SP12	**12th preset speed**	See page 45	0 to 500 Hz	60 Hz
SP13	**13th preset speed**	See page 45	0 to 500 Hz	70 Hz
SP14	**14th preset speed**	See page 45	0 to 500 Hz	80 Hz
SP15	**15th preset speed**	See page 45	0 to 500 Hz	90 Hz
SP16	**16th preset speed**	See page 45	0 to 500 Hz	100 Hz
CL1	**Current limit**		0.25 to 1.5 In (1)	1.5 In (1)
	Used to limit the torque and the temperature rise of the motor.			
CL2	**2nd current limit**	See page 55	0.25 to 1.5 In (1)	1.5 In (1)
tLS	**Low speed operating time**		0 to 999.9 s	0 (no time limit)
	Following operation at LSP for a defined period, a motor stop is requested automatically. The motor restarts if the frequency reference is greater than LSP and if a run command is still present. Caution: Value 0 corresponds to an unlimited time			
rSL	**Restart error threshold** ("wake-up" threshold)	See page 52	0 to 100%	0
UFr2	**IR compensation, motor 2**	See page 57	0 to 100%	20
FLG2	**Frequency loop gain, motor 2**	See page 57	1 to 100%	20
StA2	**Stability, motor 2**	See page 57	1 to 100%	20
SLP2	**Slip compensation, motor 2**	See page 57	0 to 150%	100%

(1) In corresponds to the nominal drive current indicated in the Installation Manual and on the drive rating plate.

These parameters only appear if the corresponding function has been selected in another menu. When the corresponding function is also accessible and adjustable from within the configuration menu, to aid programming their description is detailed in these menus, on the pages indicated.
Those which are underlined appear in factory settings mode.

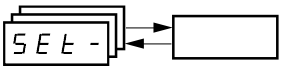

Code	Description	Adjustment range	Factory setting
Ftd	**Motor frequency threshold** above which the relay contact (R1 or R2 = FtA) closes or output AOV = 10 V (dO = StA)	0 to 500 Hz	bFr
ttd	**Motor thermal state threshold** above which the relay contact (R1 or R2 = tSA) closes or output AOV = 10 V (dO = tSA)	0 to 118%	100%
Ctd	**Motor current threshold** beyond which the relay contact (R1 or R2 = CtA) closes or output AOV = 10 V (dO = CtA)	0 to 1.5 In (1)	In (1)
SdS	**Scale factor for display parameter SPd1/SPd2/SPd3 (SUP- menu on page 65)**	0.1 to 200	30
	Used to scale a value in proportion to the output frequency rFr: the machine speed, the motor speed, etc. - If SdS ⩽ 1, SPd1 is displayed (possible definition = 0.01) - If 1 < SdS ⩽ 10, SPd2 is displayed (possible definition = 0.1) - If SdS > 10, SPd3 is displayed (possible definition = 1) - If SdS > 10 and SdS x rFr > 9999: Display of Spd3 = $\frac{SdS \times rFr}{1000}$ to 2 decimal places Example: For 24 223, display is 24.22 - If SdS > 10 and SdS x rFr > 65535, display locked at 65.54 Example: Display motor speed for 4-pole motor, 1500 rpm at 50 Hz (synchronous speed): SdS = 30 SPd3 = 1500 at rFr = 50 Hz		
SFr	**Switching frequency** See page 22	2.0 to 16 kHz	4 kHz
	This parameter can also be accessed in the drC- menu.		

(1) In corresponds to the nominal drive current indicated in the Installation Manual and on the drive rating plate.

Motor control menu drC-

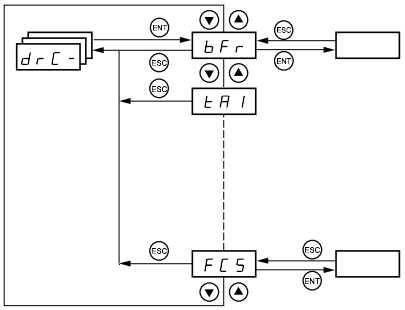

Standard motor frequency

Return to factory settings/restore configuration

With the exception of tUn, which can power up the motor, parameters can only be modified in stop mode, with no run command present.

On the optional remote terminal, this menu can be accessed with the switch in the position.

Drive performance can be optimized by:
- **Entering the values given on the motor rating plate in the drive menu**
- **Performing an auto-tune operation (on a standard asynchronous motor)**

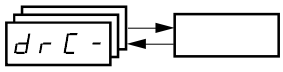

Code	Description	Adjustment range	Factory setting
bFr	**Standard motor frequency**		50
	50 Hz: IEC 60 Hz: NEMA This parameter modifies the presets of the following parameters: HSP page 16, Ftd page 19, FrS page 20 and tFr page 22.		
UnS	**Nominal motor voltage given on the rating plate**	According to drive rating	According to drive rating
	ATV31●●●M2: 100 to 240 V ATV31●●●M3X: 100 to 240 V ATV31●●●N4: 100 to 500 V ATV31●●●S6X: 100 to 600 V		
FrS	**Nominal motor frequency given on the rating plate**	10 to 500 Hz	50 Hz
	⚠ The ratio $\frac{\text{UnS (in volts)}}{\text{FrS (in Hz)}}$ must not exceed the following values: ATV31●●●M2: 7 max. ATV31●●●M3X: 7 max. ATV31●●●N4: 14 max. ATV31●●●S6X: 17 max. The factory setting is 50 Hz, or preset to 60 Hz if bFr is set to 60 Hz.		
nCr	**Nominal motor current given on the rating plate**	0.25 to 1.5 In (1)	According to drive rating
nSP	**Nominal motor speed given on the rating plate**	0 to 32760 RPM	According to drive rating
	0 to 9999 RPM then 10.00 to 32.76 KRPM If, rather than the nominal speed, the rating plate indicates the synchronous speed and the slip in Hz or as a %, calculate the nominal speed as follows: • Nominal speed = Synchronous speed x $\frac{100 - \text{slip as a \%}}{100}$ or • Nominal speed = Synchronous speed x $\frac{50 - \text{slip in Hz}}{50}$ (50 Hz motors) or • Nominal speed = Synchronous speed x $\frac{60 - \text{slip in Hz}}{60}$ (60 Hz motors)		
CoS	**Motor Cos Phi given on the rating plate**	0.5 to 1	According to drive rating

(1) In corresponds to the nominal drive current indicated in the Installation Manual and on the drive rating plate.

Motor control menu drC-

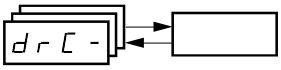

Code	Description	Adjustment range	Factory setting
rSC	**Cold state stator resistance**		nO
	nO: Function inactive. For applications which do not require high performance or do not tolerate automatic autotuning (passing a current through the motor) each time the drive is powered up. InIt: Activates the function. To improve low-speed performance whatever the thermal state of the motor. XXXX Value of cold state stator resistance used, in mΩ. **Caution:** • **It is strongly recommended that this function is activated in Lifting and Handling applications.** • The function should only be activated (InIt) when the motor is in cold state. • When rSC = InIt, parameter tUn is forced to POn. At the next run command, the stator resistance is measured with an auto-tune. Parameter rSC then changes to this value (XXXX) and maintains it; tUn remains forced to POn. Parameter rSC remains at InIt as long as the measurement has not been performed. • Value XXXX can be forced or modified using the ▲ ▼ keys.		
tUn	**Motor control auto-tuning**		nO
	It is essential that all the motor parameters (UnS, FrS, nCr, nSP, COS) are configured correctly before performing auto-tuning. nO: Auto-tuning not performed. YES: Auto-tuning is performed as soon as possible, then the parameter automatically switches to dOnE or nO in the event of a fault (the tnF fault is displayed if tnL = YES (see page 62). dOnE: Use of the values given the last time auto-tuning was performed. rUn: Auto-tuning is performed every time a run command is sent. POn: Auto-tuning is performed on every power-up. LI1 to LI6: Auto-tuning is performed on the transition from 0 → 1 of a logic input assigned to this function. **Caution:** tUn is forced to POn if rSC is other than nO. Auto-tuning is only performed if no command has been activated. If a "freewheel stop" or "fast stop" function is assigned to a logic input, this input must be set to 1 (active at 0). Auto-tuning may last for 1 to 2 seconds. Do not interrupt; wait for the display to change to "dOnE" or "nO". ⚠ During auto-tuning the motor operates at nominal current.		
tUS	**Auto-tuning status** (information only, cannot be modified)		tAb
	tAb: The default stator resistance value is used to control the motor. PEnd: Auto-tuning has been requested but not yet performed. PrOG: Auto-tuning in progress FAIL: Auto-tuning has failed. dOnE: The stator resistance measured by the auto-tuning function is used to control the motor. Strd: The cold state stator resistance (rSC other than nO) that is used to control the motor.		
UFt	**Selection of the type of voltage/frequency ratio**		n
	L: Constant torque for motors connected in parallel or special motors P: Variable torque: pump and fan applications n: Sensorless flux vector control for constant torque applications nLd: Energy saving, for variable torque applications not requiring high dynamics (behaves in a similar way to the P ratio at no load and the n ratio on load) Voltage 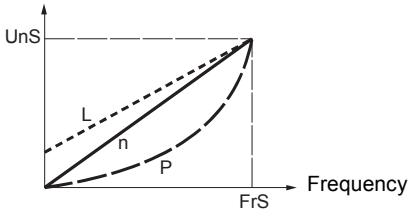 		

Motor control menu drC-

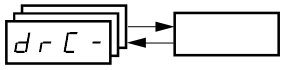

Code	Description	Adjustment range	Factory setting
nrd	**Random switching frequency**		YES
	YES: Frequency with random modulation nO: Fixed frequency Random frequency modulation prevents any resonance which may occur at a fixed frequency.		
SFr	**Switching frequency** (1)	2.0 to 16 kHz	4 kHz
	The frequency can be adjusted to reduce the noise generated by the motor. If the frequency has been set to a value higher than 4 kHz, in the event of an excessive rise in temperature, the drive will automatically reduce the switching frequency and increase it again once the temperature has returned to normal.		
tFr	**Maximum output frequency**	10 to 500 Hz	60 Hz
	The factory setting is 60 Hz, or preset to 72 Hz if bFr is set to 60 Hz.		
SrF	**Suppression of the speed loop filter**		nO
	nO: The speed loop filter is active (prevents the reference being exceeded). YES: The speed loop filter is suppressed (in position control applications, this reduces the response time and the reference may be exceeded). 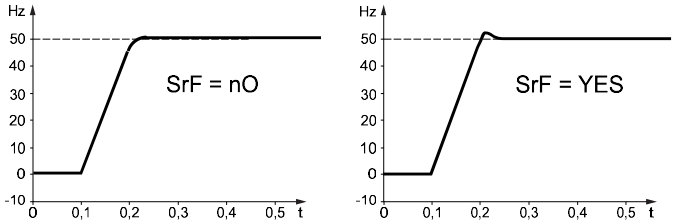 		
SCS	**Saving the configuration** (1)		nO
	nO: Function inactive Str 1: Saves the current configuration (but not the result of auto-tuning) to EEPROM. SCS automatically switches to nO as soon as the save has been performed. This function is used to keep another configuration in reserve, in addition to the current configuration. When drives leave the factory the current configuration and the backup configuration are both initialized with the factory configuration. • If the remote terminal option is connected to the drive, the following additional selection options will appear: FIL 1, FIL 2, FIL 3, FIL 4 (files available in the remote terminal's EEPROM memory for saving the current configuration). They can be used to store between 1 and 4 different configurations which can also be stored on or even transferred to other drives of the same rating. SCS automatically switches to nO as soon as the save has been performed.		
FCS	**Return to factory settings/restore configuration** (1)		nO
	nO: Function inactive rECI: The current configuration becomes identical to the backup configuration previously saved by SCS = StrI. rECI is only visible if the backup has been carried out. FCS automatically changes to nO as soon as this action has been performed. InI: The current configuration becomes identical to the **factory setting**. FCS automatically changes to nO as soon as this action has been performed. • If the remote terminal option is connected to the drive, the following additional selection options appear, as long as the corresponding files have been loaded in the remote terminal's EEPROM memory (0 to 4 files): FIL 1, FIL 2, FIL 3, FIL 4. They enable the current configuration to be replaced with one of the 4 configurations which may be loaded on the remote terminal. FCS automatically changes to nO as soon as this action has been performed. **Caution:** If nAd appears on the display briefly once the parameter has switched to nO, this means that the configuration transfer is not possible and has not been performed (different drive ratings for example). If nEr appears on the display briefly once the parameter has switched to nO, this means that a configuration transfer error has occurred and the factory settings must be restored using InI. In both cases, check the configuration to be transferred before trying again. ⚠ For rECI, InI and FL1 to FL4 to be taken into account, the ENT key must be held down for 2 s.		

(1) SCS and FCS can be accessed via several configuration menus but they concern all menus and parameters as a whole.
(2) Parameter can also be accessed in the settings menu (SEt-).

I/O menu I-O-

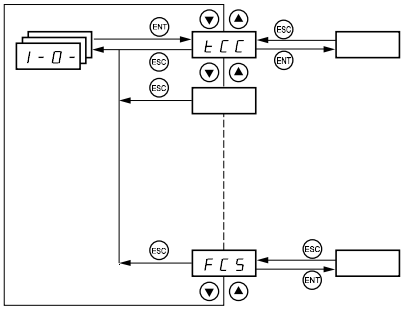

2-wire/3-wire control

Return to factory settings/restore configuration

The parameters can only be modified when the drive is stopped and no run command is present.
On the optional remote terminal, this menu can be accessed with the switch in the position.

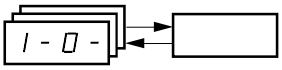

Code	Description	Factory setting
tCC	**2-wire/3-wire control** **(Type of control)**	2C ATV31●●●A: LOC
	Control configuration: 2C = 2-wire control 3C = 3-wire control LOC = local control (drive RUN/STOP/RESET) for ATV31●●●A only (invisible if LAC = L3, see page 33). 2-wire control: The open or closed state of the input controls running or stopping. Wiring example: LI1: forward LIx: reverse 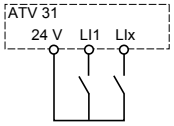 3-wire control (pulse control): A "forward" or "reverse" pulse is sufficient to control starting, a "stop" pulse is sufficient to control stopping. Example of wiring: LI1: stop LI2: forward LIx: reverse 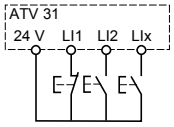 ⚠ To change the assignment of tCC press the "ENT" key for 2 s. This causes the following functions to return to their factory setting: rrS, tCt and all functions affecting logic inputs.	
tCt	**Type of 2-wire control** (parameter only accessible if tCC = 2C)	trn
	LEL: State 0 or 1 is taken into account for run or stop. trn: A change of state (transition or edge) is necessary to initiate operation, in order to prevent accidental restarts after a break in the power supply. PFO: State 0 or 1 is taken into account for run or stop, but the "forward" input always takes priority over the "reverse" input.	
rrS	**Reverse operation via logic input**	if tCC = 2C: LI2 if tCC = 3C: LI3 if tCC = LOC: nO
	If rrS = nO, reverse operation is active, by means of negative voltage on AI2 for example. nO: Not assigned LI2: Logic input LI2, can be accessed if tCC = 2C LI3: Logic input LI3 LI4: Logic input LI4 LI5: Logic input LI5 LI6: Logic input LI6	

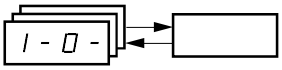

Code	Description	Factory setting
CrL3 CrH3	**Value for low speed (LSP) on input AI3**, can be set between 0 and 20 mA **Value for high speed (HSP) on input AI3**, can be set between 4 and 20 mA	4 mA 20 mA
	These two parameters are used to configure the input for 0-20 mA, 4-20 mA, 20-4 mA, etc. 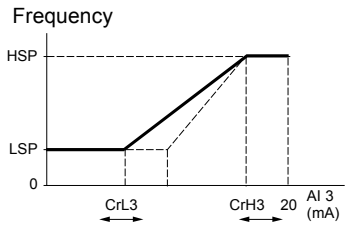 Example: 20 - 4 mA 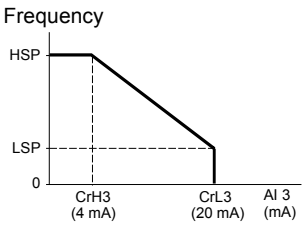	
AOIt	**Configuration of the analog output**	0A
	0A: 0 - 20 mA configuration (use terminal AOC) 4A: 4 - 20 mA configuration (use terminal AOC) 10U: 0 - 10 V configuration (use terminal AOV)	
dO	**Analog/logic output AOC/AOV**	nO
	nO: Not assigned OCr: Motor current. 20 mA or 10 V corresponds to twice the nominal drive current. OFr: Motor frequency. 20 mA or 10 V corresponds to the maximum frequency tFr (page 22). Otr: Motor torque. 20 mA or 10 V corresponds to twice the nominal motor torque. OPr: Power supplied by the drive. 20 mA or 10 V corresponds to twice the nominal drive power. Making the following assignments (1) will transform the analog output to a logic output (see the diagram in the Installation Manual): FLt: Drive fault rUn: Drive running FtA: Frequency threshold reached (Ftd parameter in the SEt- menu, page 19) FLA: High speed (HSP) reached CtA: Current threshold reached (Ctd parameter in the SEt- menu, page 19) SrA: Frequency reference reached tSA: Motor thermal threshold reached (ttd parameter in the SEt- menu, page 19) bLC: Brake sequence (for information, as this assignment can be only be activated or deactivated from the FUn- menu, see page 54) APL: Loss of 4-20 mA signal, even if LFL = nO (page 62) The logic output is in state 1 (24 V) when the selected assignment is active, with the exception of FLt (state 1 if the drive is not faulty). ⚠ (1) With these assignments, **configure AOt = 0A.**	
r1	**Relay r1**	FLt
	nO: Not assigned FLt: Drive fault rUn: Drive running FtA: Frequency threshold reached (Ftd parameter in the SEt- menu, page 19) FLA: High speed (HSP) reached CtA: Current threshold reached (Ctd parameter in the SEt- menu, page 19) SrA: Frequency reference reached tSA: Motor thermal threshold reached (ttd parameter in the SEt- menu, page 19) APL: Loss of 4-20 mA signal, even if LFL = nO (page 62) The relay is powered up when the selected assignment is active, with the exception of FLt (powered up if the drive is not faulty).	
r2	**Relay r2**	nO
	nO: Not assigned FLt: Drive fault rUn: Drive running FtA: Frequency threshold reached (Ftd parameter in the SEt- menu, page 19) FLA: High speed (HSP) reached CtA: Current threshold reached (Ctd parameter in the SEt- menu, page 19) SrA: Frequency reference reached tSA: Motor thermal threshold reached (ttd parameter in the SEt- menu, page 19) bLC: Brake sequence (for information, as this assignment can be only be activated or deactivated from the FUn- menu, see page 54) APL: Loss of 4-20 mA signal, even if LFL = nO (page 62) The relay is powered up when the selected assignment is active, with the exception of FLt (powered up if the drive is not faulty).	

I/O menu I-O-

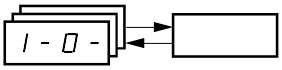

Code	Description	Factory setting
SCS	**Saving the configuration** (1)	
	nO: Function inactive Str I: Saves the current configuration (but not the result of auto-tuning) to EEPROM. SCS automatically switches to nO as soon as the save has been performed. This function is used to keep another configuration in reserve, in addition to the current configuration. When drives leave the factory the current configuration and the backup configuration are both initialized with the factory configuration. • If the remote terminal option is connected to the drive, the following additional selection options will appear: FIL 1, FIL 2, FIL 3, FIL 4 (files available in the remote terminal's EEPROM memory for saving the current configuration). They can be used to store between 1 and 4 different configurations which can also be stored on or even transferred to other drives of the same rating. SCS automatically switches to nO as soon as the save has been performed.	
FCS	**Return to factory settings/restore configuration** (1)	
	nO: Function inactive rECI: The current configuration becomes identical to the backup configuration previously saved by SCS = Strl. rECI is only visible if the backup has been carried out. FCS automatically changes to nO as soon as this action has been performed. InI: The current configuration becomes identical to the **factory setting**. FCS automatically changes to nO as soon as this action has been performed. • If the remote terminal option is connected to the drive, the following additional selection options appear, as long as the corresponding files have been loaded in the remote terminal's EEPROM memory (0 to 4 files): FIL 1, FIL 2, FIL 3, FIL 4. They enable the current configuration to be replaced with one of the 4 configurations that may be loaded on the remote terminal. FCS automatically changes to nO as soon as this action has been performed. **Caution:** If nAd appears on the display briefly once FCS has switched to nO, this means that the configuration transfer is not possible and has not been performed (different drive ratings for example). If nter appears on the display briefly once the parameter has switched to nO, this means that a configuration transfer error has occurred and the factory settings must be restored using InI. In both cases, check the configuration to be transferred before trying again. ⚠ For rECI, InI and FL1 to FL4 to be taken into account, the ENT key must be held down for 2 s.	

(1) SCS and FCS can be accessed via several configuration menus but they concern all menus and parameters as a whole.

Control menu CtL-

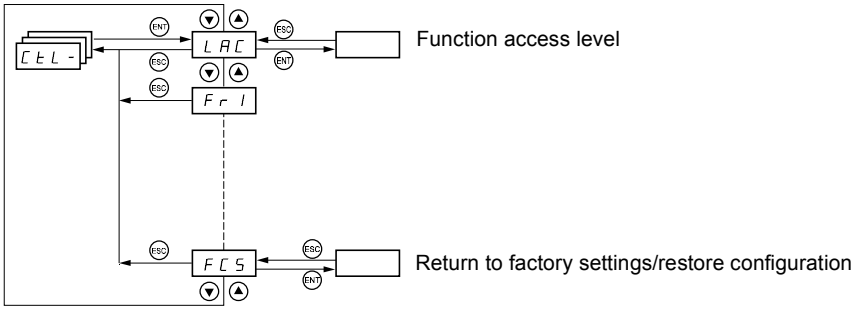

The parameters can only be modified when the drive is stopped and no run command is present.
On the optional remote terminal, this menu can be accessed with the switch in the position.

Control and reference channels

Run commands (forward, reverse, etc.) and references can be sent using the following methods:

Command CMD	Reference rFr
tEr: Terminal (LI.)	AI1-AI2-AI3: Terminal
LOC: Keypad (RUN/STOP) on ATV31●●●A only	AIP: Potentiometer on ATV31●●●A only
LCC: Remote terminal (RJ45 socket)	LCC: ATV31 keypad or ATV31●●●A keypad or remote terminal
Mdb: Modbus (RJ45 socket)	Mdb: Modbus (RJ45 socket)
CAn: CANopen (RJ45 socket)	CAn: CANopen (RJ45 socket)

Note:
The STOP keys on the keypad and the remote terminal may retain priority (PSt parameter in the CtL- menu).

The LAC parameter in the CtL- menu can be used to select priority modes for the control and reference channels. It has 3 function levels:

- LAC = L1: Basic functions, with priority via communication bus. **This level is interchangeable with ATV28**.
- LAC = L2: Provides the option of additional functions compared with L1:
  - +/- speed (motorized potentiometer)
  - Brake control
  - Switching for 2nd current limit
  - Motor switching
  - Management of limit switches
- LAC = L3: Same options as with L2, plus mixed mode for control and reference channels.

These channels can be combined as follows if parameter LAC = L1 or L2.

Highest priority to lowest priority: Local forcing, CANopen, Modbus, Remote terminal, Terminal/Keypad (from right to left in the diagram below).

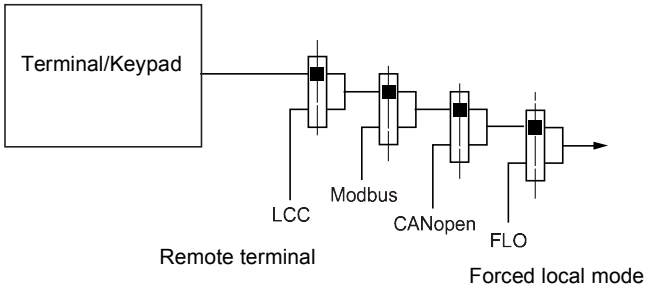

See the detailed diagrams on pages 28 and 29.

- On ATV31 drives, in factory settings mode, control and reference are managed by the terminal.
- On ATV31●●●A drives, in factory settings mode, control is via the keypad and the reference is set via the potentiometer for this keypad.
- With a remote terminal, if LCC = YES (CtL- menu), control and reference are managed by the remote terminal (reference via LFr, SEt- menu).

These channels can be combined in other ways described below if LAC = L3.

Combined control and reference (parameter CHCF = SIM):

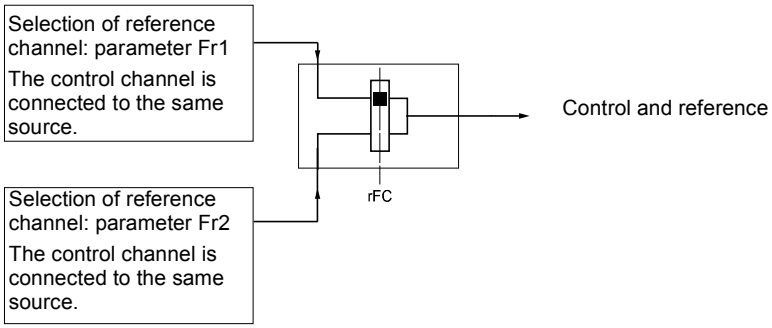

Parameter rFC can be used to select channel Fr1 or Fr2 or to configure a logic input or a control word bit for remote switching of either.
See the detailed diagrams on pages 30 et 32.

Separate control and reference (parameter CHCF = SEP):

Reference

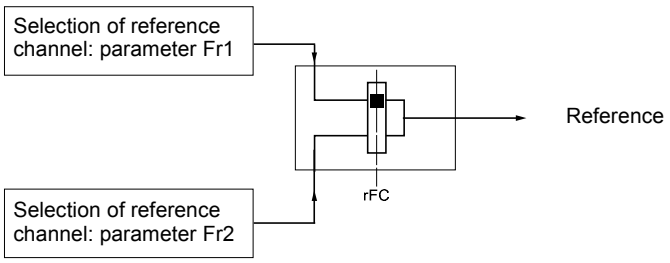

Parameter rFC can be used to select channel Fr1 or Fr2 or to configure a logic input or a control word bit for remote switching of either.

Control

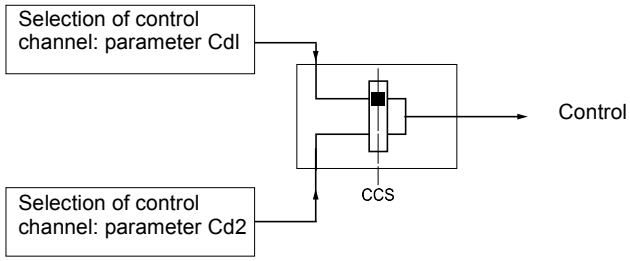

Parameter CCS can be used to select channel Cd1 or Cd2 or to configure a logic input or a control word bit for remote switching of either.

See the detailed diagrams on pages 30 and 31.

Reference channel for LAC = L1 or L2

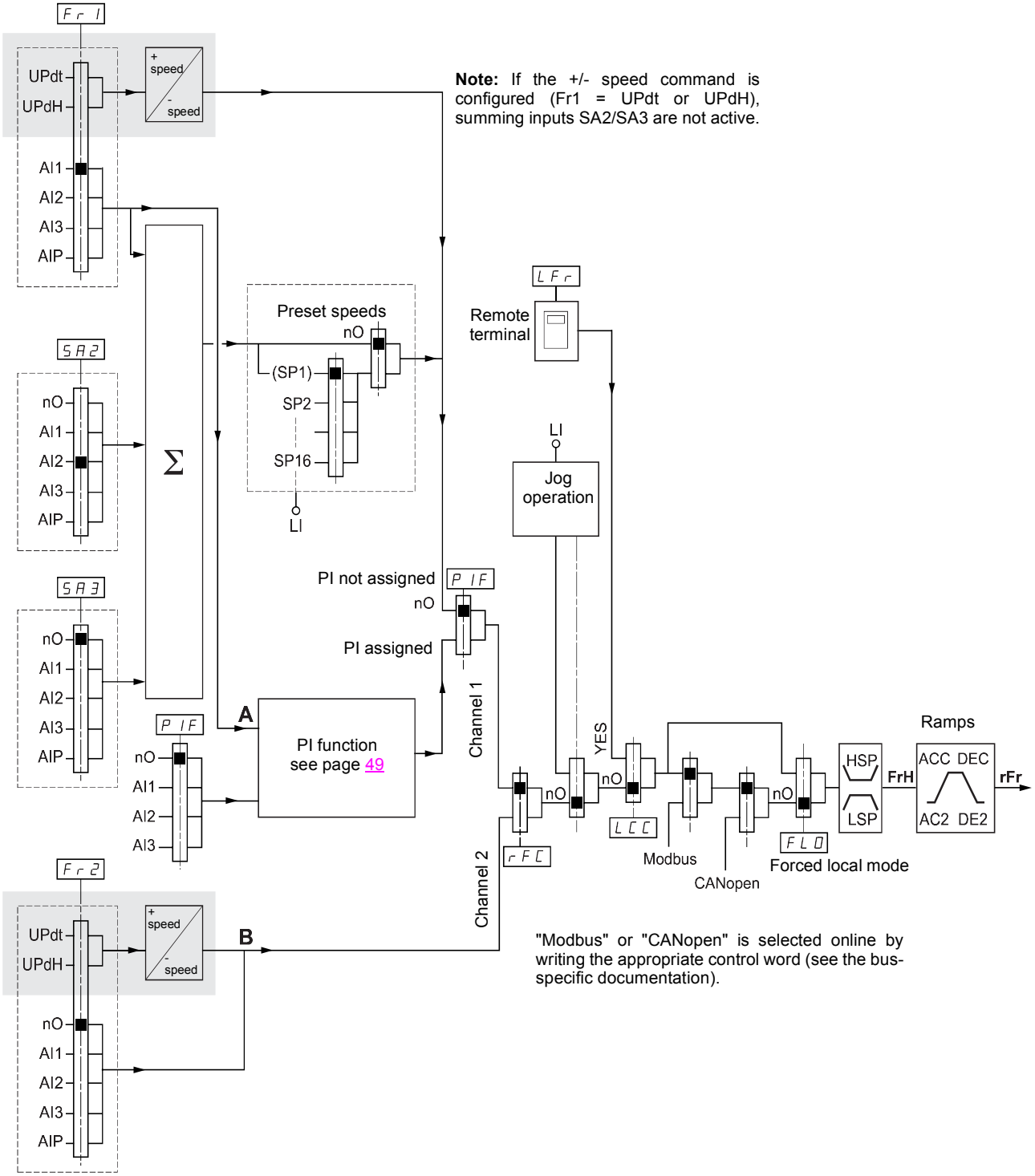

Key:

Parameter:
The black square represents the factory setting assignment

Function accessible for LAC = L2

Control channel for LAC = L1 or L2

Parameters FLO, LCC and the selection of the Modbus or CANopen bus are common to the reference and control channels.
Example: LCC = YES sets the drive to control **and** reference via the remote terminal.

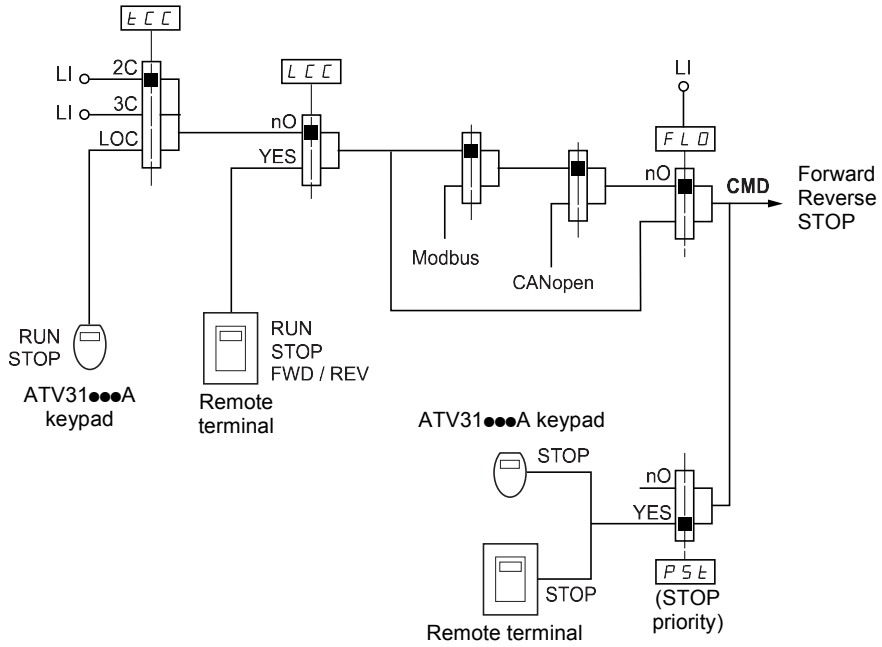

Key:

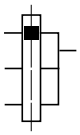

Parameter:
The black square represents
the factory setting assignment

Reference channel for LAC = L3

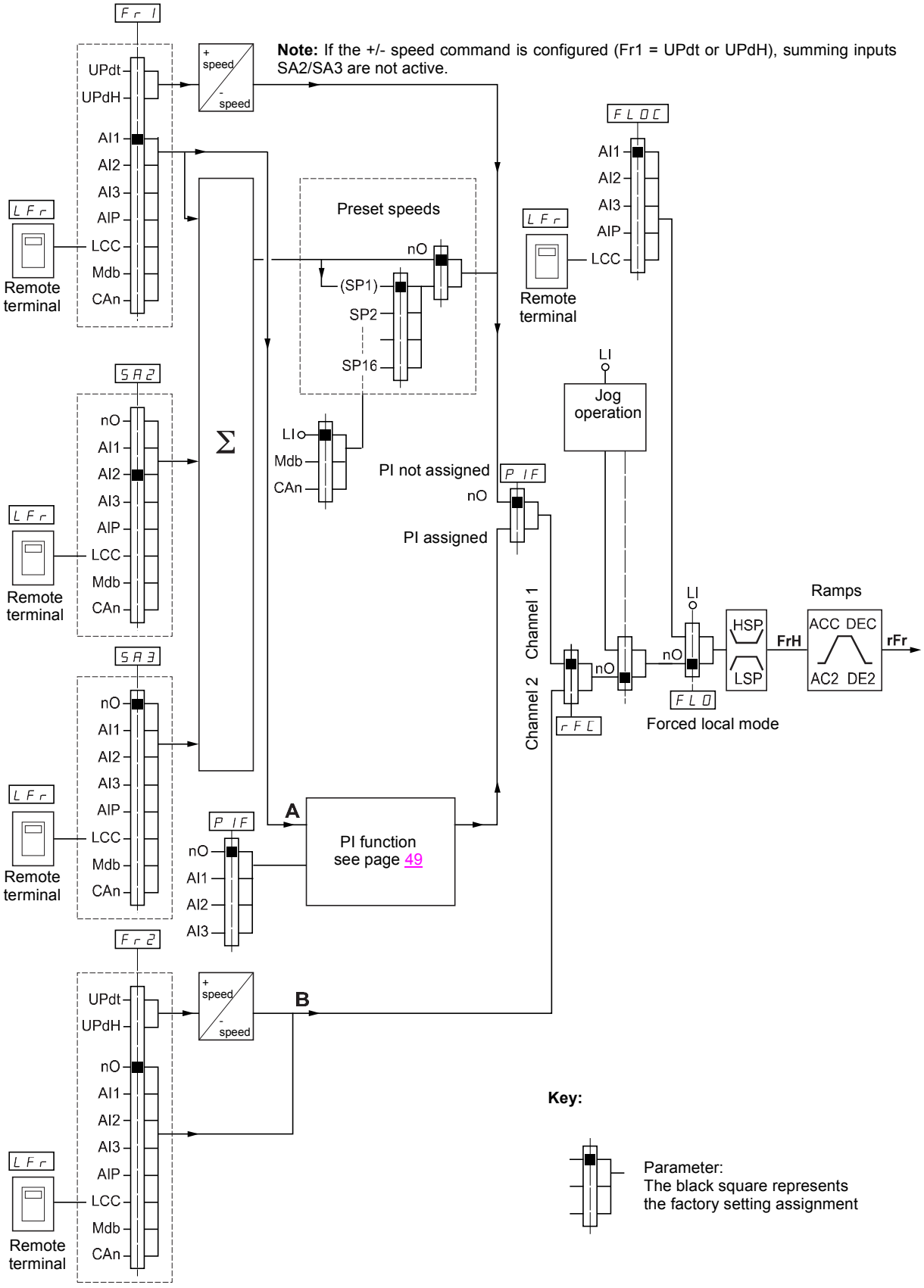

Control channel for LAC = L3

Combined reference and control

Parameters Fr1, Fr2, rFC, FLO and FLOC are common to reference and control. The control channel is therefore determined by the reference channel.

Example: If reference Fr1 = AI1 (analog input on terminal block) control is via LI (logic input on terminal block)..

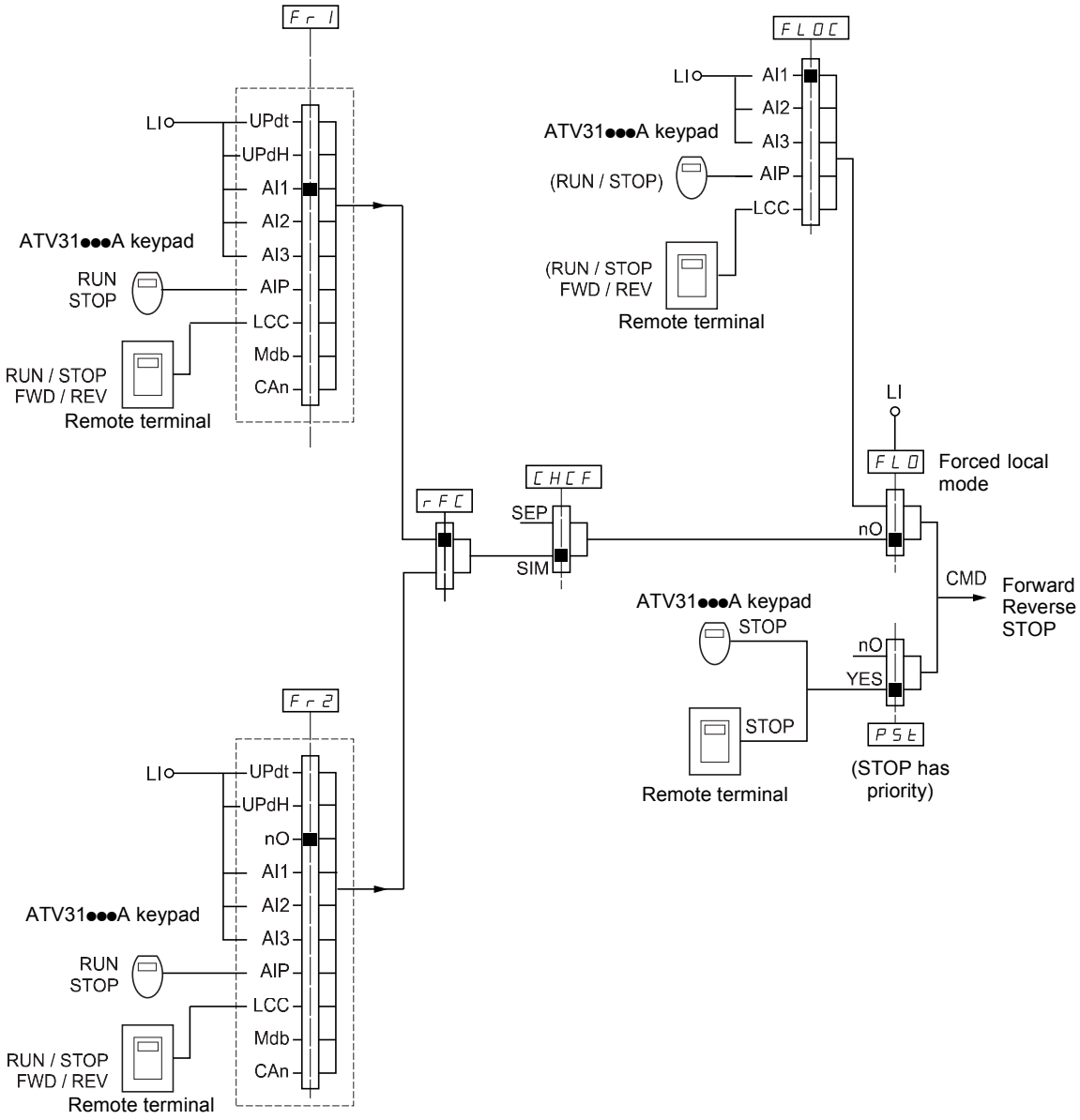

Key:

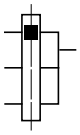

Parameter:
The black square represents
the factory setting assignment

Control channel for LAC = L3

Mixed mode (separate reference and control)

Parameters FLO and FLOC are common to reference and control.
Example: If the reference is in local forced mode via AI1 (analog input on terminal block) control in local forced mode is via LI (logic input on terminal block).

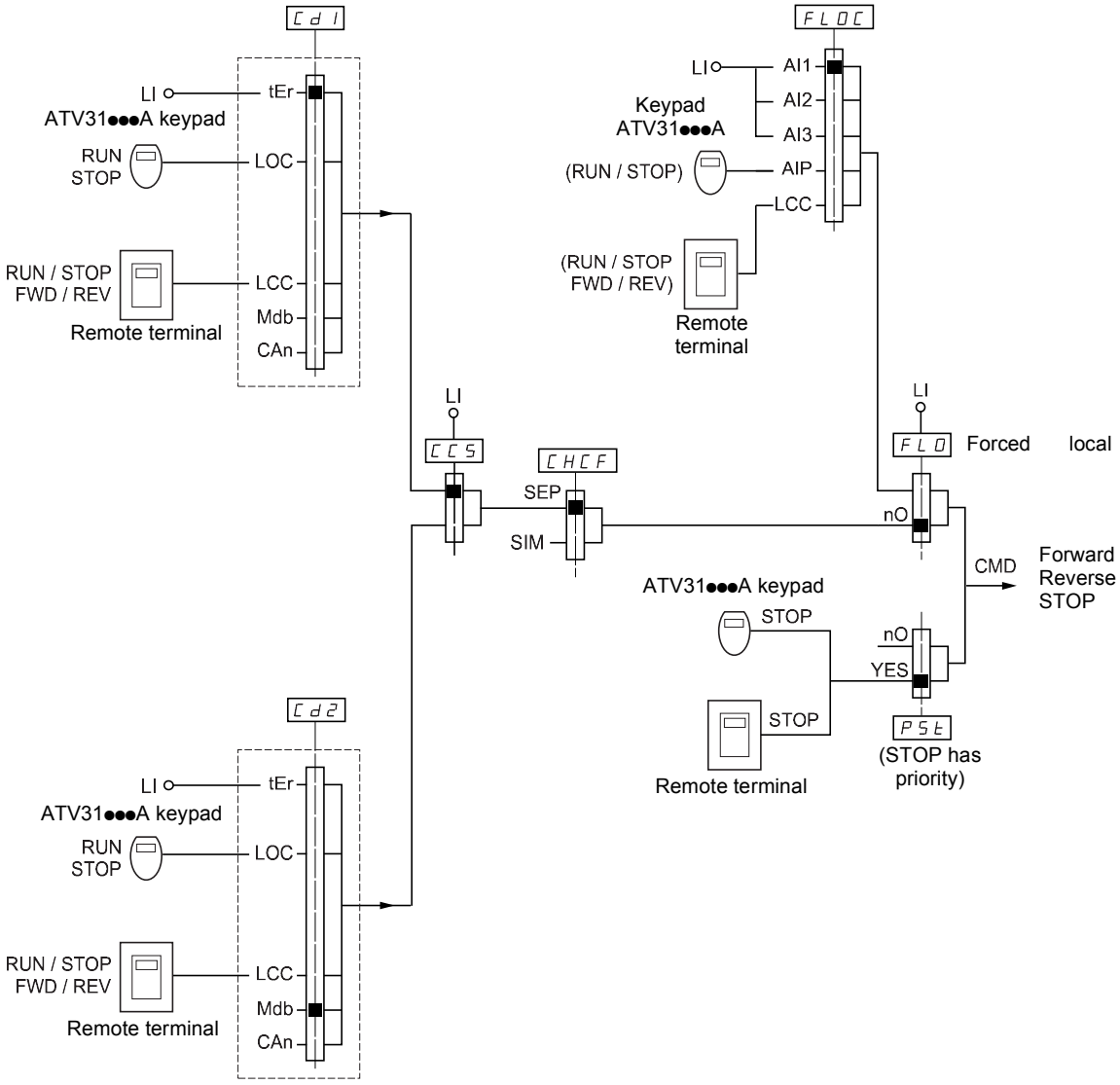

Key:

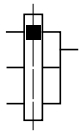

Parameter:
The black square represents
the factory setting assignment

Control menu CtL-

There may be an incompatibility between functions (see the incompatibility table 13). In this case, the first function configured will prevent the remainder being configured.

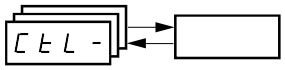

Code	Description	Adjustment range	Factory setting
LAC	**Function access level**		L1
	L1: Access to standard functions. Significantly, this level is interchangeable with ATV28. L2: Access to advanced functions in the FUn- menu: - +/- speed (motorized potentiometer) - Brake control - Switching for second current limit - Motor switching - Management of limit switches L3: Access to advanced functions and management of mixed control modes. **Assigning LAC to L3 will restore the factory settings of the Fr1 (below), Cd1 (page 34), CHCF (page 34), and tCC (page 23) parameters. The latter is forced to "2C" on ATV31●●●A. L3 can only be restored to L2 or L1 and L2 to L1 by means of a "factory setting" via FCS (page 36).** In order to change the assignment of LAC, you must press and hold down the "ENT" key for 2 seconds.		
Fr1	**Configuration reference 1**		AI1 AIP for ATV31●●●A
	AI1: Analog input AI1 AI2: Analog input AI2 AI3: Analog input AI3 AIP: Potentiometer (ATV31●●●A only) If LAC = L2 or L3, the following additional assignments are possible: UPdt: (1) + speed/- speed via LI UPdH: (1) + speed/- speed via keys ▲▼ on the ATV31 or ATV31●●●A keypad or remote terminal. For operation, display the frequency rFr (see page 65) If LAC = L3, the following additional assignments are possible: LCC: Reference via the remote terminal, LFr parameter in the SEt- menu page 16. Mdb: Reference via Modbus CAn: Reference via CANopen		
Fr2	**Configuration reference 2**		nO
	nO: Not assigned AI1: Analog input AI1 AI2: Analog input AI2 AI3: Analog input AI3 AIP: Potentiometer (ATV31●●●A only) If LAC = L2 or L3, the following additional assignments are possible: UPdt: (1) + speed/- speed via LI UPdH: (1) + speed/- speed via keys ▲▼ on the ATV31 or ATV31●●●A keypad or remote terminal. For operation, display the frequency rFr (see page 65) If LAC = L3, the following additional assignments are possible: LCC: Reference via the remote terminal, LFr parameter in the SEt- menu page 16. Mdb: Reference via Modbus CAn: Reference via CANopen		

(1) Caution: You cannot assign UPdt to Fr1 or Fr2 and UPdH to Fr1 or Fr2 at the same time. Only one of the UPdt/UPdH assignments is permitted on each reference channel.

Control menu CtL-

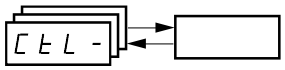

Code	Description	Adjustment range	Factory setting
rFC	**Reference switching**		Fr1
	Parameter rFC can be used to select channel Fr1 or Fr2 or to configure a logic input or a control bit for remote switching of Fr1 or Fr2. Fr1: Reference = Reference 1 Fr2: Reference = Reference 2 LI1: Logic input LI1 LI2: Logic input LI2 LI3: Logic input LI3 LI4: Logic input LI4 LI5: Logic input LI5 LI6: Logic input LI6 If LAC = L3, the following additional assignments are possible: C111: Bit 11 of the Modbus control word C112: Bit 12 of the Modbus control word C113: Bit 13 of the Modbus control word C114: Bit 14 of the Modbus control word C115: Bit 15 of the Modbus control word C211: Bit 11 of the CANopen control word C212: Bit 12 of the CANopen control word C213: Bit 13 of the CANopen control word C214: Bit 14 of the CANopen control word C215: Bit 15 of the CANopen control word The reference can be switched with the drive running. Fr1 is active when the logic input or control word bit is in state 0. Fr2 is active when the logic input or control word bit is in state 1.		
CHCF	**Mixed mode** (control channels separated from reference channels)		SIM
	Can be accessed if LAC = L3 SIM: Combined SEP: Separate		
Cd1	**Configuration of control channel 1**		tEr LOC for ATV31●●●A
	Can be accessed if CHCF = SEP and LAC = L3 tEr: Terminal block control LOC: Keypad control (ATV31●●●A only) LCC: Remote terminal control Mdb: Control via Modbus CAn: Control via CAN		
Cd2	**Configuration of control channel 2**		Mdb:
	Can be accessed if CHCF = SEP and LAC = L3 tEr: Terminal block control LOC: Keypad control (ATV31●●●A only) LCC: Remote terminal control Mdb: Control via Modbus CAn: Control via CAN		

These parameters only appear if the function has been enabled.

Control menu CtL-

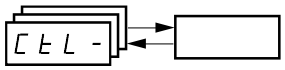

Code	Description	Adjustment range	Factory setting
CCS	**Control channel switching**		Cd1
	Can be accessed if CHCF = SEP and LAC = L3 Parameter CCS can be used to select channel Cd1 or Cd2 or to configure a logic input or a control bit for remote switching of Cd1 or Cd2. Cd 1: Control channel = Channel 1 Cd2: Control channel = Channel 2 LI1: Logic input LI1 LI2: Logic input LI2 LI3: Logic input LI3 LI4: Logic input LI4 LI5: Logic input LI5 LI6: Logic input LI6 C111: Bit 11 of the Modbus control word C112: Bit 12 of the Modbus control word C113: Bit 13 of the Modbus control word C114: Bit 14 of the Modbus control word C115: Bit 15 of the Modbus control word C211: Bit 11 of the CANopen control word C212: Bit 12 of the CANopen control word C213: Bit 13 of the CANopen control word C214: Bit 14 of the CANopen control word C215: Bit 15 of the CANopen control word Channel 1 is active when the input or control word bit is in state 0. Channel 2 is active when the input or control word bit is in state 1.		
COP	**Copy channel 1 to channel 2** (copy only in this direction)		nO
	Can be accessed if LAC = L3 nO: No copy SP: Copy reference Cd: Copy control ALL: Copy control and reference • If channel 2 is controlled via the terminal block, channel 1 control is not copied. • If channel 2 reference is set via AI1, AI2, AI3 or AIP, channel 1 reference is not copied. • The reference copied is FrH (before ramp) unless the channel 2 reference is set via +/- speed. In this case, the reference copied is rFr (after ramp) ⚠ - Copying the control and/or the reference may change the direction of rotation.		
LCC	**Control via remote terminal**		nO
	Parameter can only be accessed with the remote terminal option and if LAC = L1 or L2. nO: Function inactive YES: Enables control of the drive using the STOP/RESET, RUN and FWD/REV buttons on the terminal. The speed reference is then given by parameter LFr in the SEt- menu. Only the freewheel, fast stop and DC injection stop commands remain active on the terminal block. If the drive/terminal connection is cut or if the terminal has not been connected, the drive locks in an SLF fault.		
PSt	**Stop priority**		YES
	This function gives priority to the STOP key on the keypad (ATV31●●●A only) or the STOP key on the remote terminal, regardless of the control channel (terminal block or communication bus). nO: Function inactive YES: STOP key priority In order to change the assignment of PSt, you must press and hold down the "ENT" key for 2 seconds.		
rOt	**Direction of operation authorized**		dFr
	Direction of operation authorized for the RUN key on the keypad (ATV31●●●A only) or the RUN key on the remote terminal. dFr: Forward drS: Reverse bOt: Both directions are authorized (except for the keypad on the ATV31●●●A: Forward only).		

These parameters only appear if the function has been enabled.

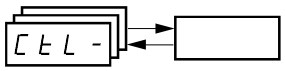

Code	Description	Adjustment range	Factory setting
SCS	**Saving the configuration** (1)		
	nO: Function inactive Str I: Saves the current configuration (but not the result of auto-tuning) to EEPROM. SCS automatically switches to nO as soon as the save has been performed. This function is used to keep another configuration in reserve, in addition to the current configuration. When drives leave the factory the current configuration and the backup configuration are both initialized with the factory configuration. • If the remote terminal option is connected to the drive, the following additional selection options will appear: FIL 1, FIL 2, FIL 3, FIL 4 (files available in the remote terminal's EEPROM memory for saving the current configuration). They can be used to store between 1 and 4 different configurations which can also be stored on or even transferred to other drives of the same rating. SCS automatically switches to nO as soon as the save has been performed.		
FCS	**Return to factory settings/Restore configuration** (1)		
	nO: Function inactive rECI: The current configuration becomes identical to the backup configuration previously saved by SCS = Strl. rECI is only visible if the backup has been carried out. FCS automatically changes to nO as soon as this action has been performed. InI: The current configuration becomes identical to the **factory setting**. FCS automatically changes to nO as soon as this action has been performed. • If the remote terminal option is connected to the drive, the following additional selection options appear, as long as the corresponding files have been loaded in the remote terminal's EEPROM memory (0 to 4 files): FIL 1, FIL 2, FIL 3, FIL 4. They enable the current configuration to be replaced with one of the 4 configurations that may be loaded on the remote terminal. FCS automatically changes to nO as soon as this action has been performed. **Caution:** If nAd appears on the display briefly once FCS has switched to nO, this means that the configuration transfer is not possible and has not been performed (different drive ratings for example). If nEr appears on the display briefly once the parameter has switched to nO, this means that a configuration transfer error has occurred and the factory settings must be restored using InI. In both cases, check the configuration to be transferred before trying again. ⚠ For rECI, InI and FL1 to FL4 to be taken into account, the ENT key must be held down for 2 s.		

(1) SCS and FCS can be accessed via several configuration menus but they concern all menus and parameters as a whole.

Application functions menu FUn-

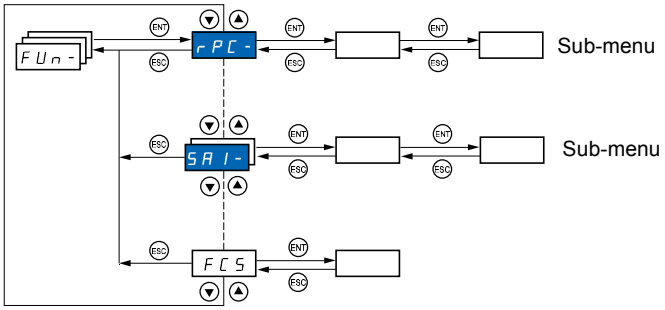

The parameters can only be modified when the drive is stopped and no run command is present.
On the optional remote terminal, this menu can be accessed with the switch in the position.

Some functions have numerous parameters. In order to clarify programming and avoid having to scroll through endless parameters, these functions have been grouped in sub-menus.
Like menus, sub-menus are identified by a dash after their code: PSS- for example.

There may be an incompatibility between functions (see the incompatibility table 13). In this case, the first function configured will prevent the remainder being configured.

Code		Description	Adjustment range	Factory setting
rPC-		**Ramps**		
	rPt	**Type of ramp** Defines the shape of the acceleration and deceleration ramps.		LIn
		LIn: Linear S: S ramp U: U ramp CUS: Customized S ramps 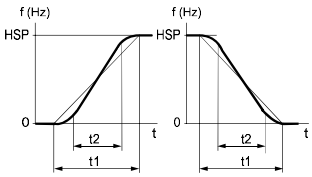 The curve coefficient is fixed, with t2 = 0.6 x t1 with t1 = set ramp time. U ramps 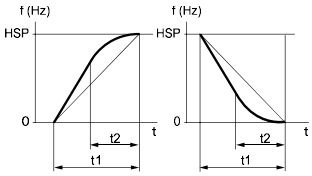 The curve coefficient is fixed, with t2 = 0.5 x t1 with t1 = set ramp time. Customized ramps 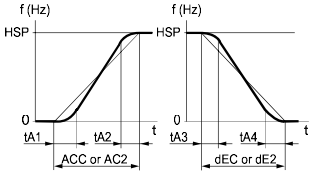 tA1: Can be set between 0 and 100% (of ACC or AC2) tA2: Can be set between 0 and (100% - tA1) (of ACC or AC2) tA3: Can be set between 0 and 100% (of dEC or dE2) tA4: Can be set between 0 and (100% - tA3) (of dEC or dE2)		
	tA1	**Start of CUS-type acceleration ramp rounded as % of total ramp time (ACC or AC2)**	0 to 100	10%

These parameters only appear if the function has been enabled.

Application functions menu FUn-

Code		Description	Adjustment range	Factory setting
rPC- (continued)	tA2	**End of CUS-type acceleration ramp rounded as % of total ramp time (ACC or AC2)**	0 to (100-tA1)	10%
	tA3	**Start of CUS-type deceleration ramp rounded as % of total ramp time (dEC or dE2)**	0 to 100	10%
	tA4	**End of CUS-type deceleration ramp as % of total ramp time (dEC or dE2)**	0 to (100-tA3)	10%
	ACC dEC	**Acceleration and deceleration ramp times** (1)	0.1 to 999.9 s 0.1 to 999.9 s	3 s 3 s
		Defined for accelerating and decelerating between 0 and the nominal frequency FrS (parameter in the drC- menu). Check that the value of dEC is not too low in relation to the load to be stopped.		
	rPS	**Ramp switching**		nO
		This function remains active regardless of the control channel. nO: Not assigned LI1: Logic input LI1 LI2: Logic input LI2 LI3: Logic input LI3 LI4: Logic input LI4 LI5: Logic input LI5 LI6: Logic input LI6 If LAC = L3, the following assignments are possible: Cd11: Bit 11 of the Modbus or CANopen control word Cd12: Bit 12 of the Modbus or CANopen control word Cd13: Bit 13 of the Modbus or CANopen control word Cd14: Bit 14 of the Modbus or CANopen control word Cd15: Bit 15 of the Modbus or CANopen control word ACC and dEC are enabled when the logic input or control word bit is in state 0. AC2 and dE2 are enabled when the logic input or control word bit is in state 1.		
	Frt	**Ramp switching threshold**	0 to 500 Hz	0
		The second ramp is switched if the value of Frt is not equal to 0 (0 deactivates the function) and the output frequency is greater than Frt. Threshold ramp switching can be combined with switching via LI or bit as follows:		
	AC2	**2nd acceleration ramp time** (1): Enabled via logic input (rPS) or frequency threshold (Frt).	0.1 to 999.9 s	5 s
	dE2	**2nd deceleration ramp time** (1): Enabled via logic input (rPS) or frequency threshold (Frt).	0.1 to 999.9 s	5 s
	brA	**Deceleration ramp adaptation**		YES
		Activating this function automatically adapts the deceleration ramp, if this has been set at too low a value for the inertia of the load. nO: Function inactive YES: Function active. The function is incompatible with applications requiring: • Positioning on a ramp • The use of a braking resistor (no guarantee of the function operating correctly) brA is forced to nO if brake control (bLC) is assigned (page 54).		

LI or bit	Frequency	Ramp
0	<Frt	ACC, dEC
0	>Frt	AC2, dE2
1	<Frt	AC2, dE2
1	>Frt	AC2, dE2

(1) Parameter can also be accessed in the SEt- menu.

These parameters only appear if the function has been enabled.

Application functions menu FUn-

Code		Description	Adjustment range	Factory setting
StC-		**Stop modes**		
	Stt	**Normal stop mode**		Stn
		Stop mode on disappearance of the run command or appearance of a stop command. rMP: On ramp FSt: Fast stop nSt: Freewheel stop dCI: DC injection stop		
	FSt	**Fast stop via logic input**		nO
		nO: Not assigned LI1: Logic input LI1 LI2: Logic input LI2 LI3: Logic input LI3 LI4: Logic input LI4 LI5: Logic input LI5 LI6: Logic input LI6 If LAC = L3, the following assignments are possible: Cd11: Bit 11 of the Modbus or CANopen control word Cd12: Bit 12 of the Modbus or CANopen control word Cd13: Bit 13 of the Modbus or CANopen control word Cd14: Bit 14 of the Modbus or CANopen control word Cd15: Bit 15 of the Modbus or CANopen control word The stop is activated when the logic state of the input changes to 0 and the control word bit changes to 1. The fast stop is a stop on a reduced ramp via parameter dCF. If the input falls back to state 1 and the run command is still active, the motor will only restart if 2-wire level control has been configured (tCC = 2C and tCt = LEL or PFO, see page 23). In other cases, a new run command must be sent.		
	dCF	**Coefficient for dividing the deceleration ramp time for fast stopping.**	0 to 10	4
		Ensure that the reduced ramp is not too low in relation to the load to be stopped. The value 0 corresponds to the minimum ramp.		
	dCI	**DC injection via logic input**		nO
		nO: Not assigned LI1: Logic input LI1 LI2: Logic input LI2 LI3: Logic input LI3 LI4: Logic input LI4 LI5: Logic input LI5 LI6: Logic input LI6 If LAC = L3, the following assignments are possible: Cd11: Bit 11 of the Modbus or CANopen control word Cd12: Bit 12 of the Modbus or CANopen control word Cd13: Bit 13 of the Modbus or CANopen control word Cd14: Bit 14 of the Modbus or CANopen control word Cd15: Bit 15 of the Modbus or CANopen control word Braking is activated when the logic state of the input or control word bit is at 1.		
	IdC	**Level of DC injection braking current activated via logic input or selected as stop mode** (1)(3)	0 to In (2)	0.7 In (2)
		After 5 seconds the injection current is peak limited at 0.5 Ith if it is set at a higher value.		
	tdC	**Total DC injection braking time selected as normal stop mode** (1)(3)	0.1 to 30 s	0.5 s

(1) Parameter can also be accessed in the settings menu (SEt-).
(2) In corresponds to the nominal drive current indicated in the Installation Manual and on the drive rating plate.
(3) Caution: These settings are not related to the "automatic standstill DC injection" function.

These parameters only appear if the function has been enabled.

Code		Description	Adjustment range	Factory setting
StC- (continued)	nSt	**Freewheel stop via logic input**		nO
		nO: Not assigned LI1: Logic input LI1 LI2: Logic input LI2 LI3: Logic input LI3 LI4: Logic input LI4 LI5: Logic input LI5 LI6: Logic input LI6 The stop is activated when the input is in logic state 0. If the input falls back to state 1 and the run command is still active, the motor will only restart if 2-wire level control has been configured. In other cases, a new run command must be sent.		

Application functions menu FUn-

Code		Description	Adjustment range	Factory setting
AdC-		**Standstill DC injection**		
	AdC	**Automatic standstill DC injection (at the end of the ramp)**		YES
		nO: No injection YES: Standstill injection for adjustable period Ct: Continuous standstill injection ⚠ This parameter gives rise to the injection of current even if a run command has not been sent. It can be accessed with the drive running.		
	tdC1	**Automatic standstill DC injection time** (1)	0.1 to 30 s	0.5 s
	SdC1	**Level of automatic standstill DC injection current** (1)	0 to 1.2 In (2)	0.7 In (2)
		⚠ Check that the motor will withstand this current without overheating.		
	tdC2	**2nd automatic standstill DC injection time** (1)	0 to 30 s	0 s
	SdC2	**2nd level of standstill DC injection current** (1)	0 to 1.2 In (2)	0.5 In (2)
		⚠ Check that the motor will withstand this current without overheating.		

AdC	SdC2	Operation
YES	x	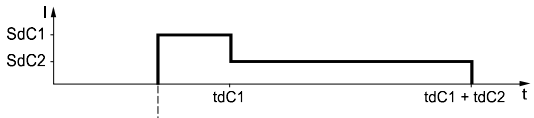
Ct	≠ 0	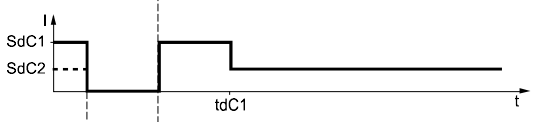
Ct	= 0	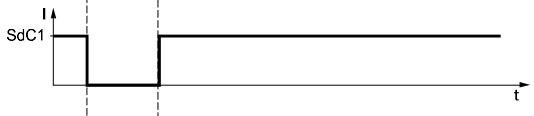
Run command		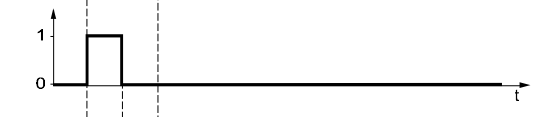
Speed		

(1) Parameter can also be accessed in the settings menu (SEt-).
(2) In corresponds to the nominal drive current indicated in the Installation Manual and on the drive rating plate.

These parameters only appear if the function has been enabled.

Code		Description	Adjustment range	Factory setting
SAI-		**Summing inputs** Can be used to sum one or two inputs to reference Fr1 only.		
	SA2	**Summing input 2**		AI2
		nO: Not assigned AI1: Analog input AI1 AI2: Analog input AI2 AI3: Analog input AI3 AIP: Potentiometer (type A drives only) If LAC = L3, the following assignments are possible: Mdb: Reference via Modbus CAn: Reference via CANopen LCC: Reference via the remote terminal, LFr parameter in the SEt- menu page 16.		
	SA3	**Summing input 3**		nO
		nO: Not assigned AI1: Analog input AI1 AI2: Analog input AI2 AI3: Analog input AI3 AIP: Potentiometer (type A drives only) If LAC = L3, the following assignments are possible: Mdb: Reference via Modbus CAn: Reference via CANopen LCC: Reference via the remote terminal, LFr parameter in the SEt- menu page 16.		

Summing inputs

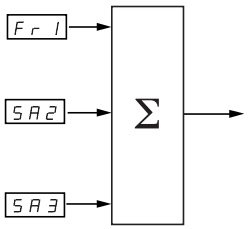

Note:

AI2 is an input ± 10 V, which can allow a subtraction by summing a negative signal.

See the complete diagrams on pages 28 and 30.

Preset speeds

2, 4, 8 or 16 speeds can be preset, requiring 1, 2, 3 or 4 logic inputs respectively.

The following order of assignments must be observed: PS2, then PS4 then PS8, then PS16.

Combination table for preset speed inputs

16 speeds LI (PS16)	8 speeds LI (PS8)	4 speeds LI (PS4)	2 speeds LI (PS2)	Speed reference
0	0	0	0	Reference (1)
0	0	0	1	SP2
0	0	1	0	SP3
0	0	1	1	SP4
0	1	0	0	SP5
0	1	0	1	SP6
0	1	1	0	SP7
0	1	1	1	SP8
1	0	0	0	SP9
1	0	0	1	SP10
1	0	1	0	SP11
1	0	1	1	SP12
1	1	0	0	SP13
1	1	0	1	SP14
1	1	1	0	SP15
1	1	1	1	SP16

(1) See the diagrams on page 28 and page 30: Reference 1 = (SP1).

Code		Description	Adjustment range	Factory setting
PSS-		**Preset speeds**		
	PS2	**2 preset speeds**		If tCC = 2C: LI3 If tCC = 3C: nO If tCC = LOC: LI3
		Selecting the assigned logic input activates the function. nO: Not assigned LI1: Logic input LI1 LI2: Logic input LI2 LI3: Logic input LI3 LI4: Logic input LI4 LI5: Logic input LI5 LI6: Logic input LI6 If LAC = L3, the following assignments are possible: Cd11: Bit 11 of the Modbus or CANopen control word Cd12: Bit 12 of the Modbus or CANopen control word Cd13: Bit 13 of the Modbus or CANopen control word Cd14: Bit 14 of the Modbus or CANopen control word Cd15: Bit 15 of the Modbus or CANopen control word		
	PS4	**4 preset speeds**		If tCC = 2C: LI4 If tCC = 3C: nO If tCC = LOC: LI4
		Selecting the assigned logic input activates the function. Check that PS2 has been assigned before assigning PS4. nO: Not assigned LI1: Logic input LI1 LI2: Logic input LI2 LI3: Logic input LI3 LI4: Logic input LI4 LI5: Logic input LI5 LI6: Logic input LI6 If LAC = L3, the following assignments are possible: Cd11: Bit 11 of the Modbus or CANopen control word Cd12: Bit 12 of the Modbus or CANopen control word Cd13: Bit 13 of the Modbus or CANopen control word Cd14: Bit 14 of the Modbus or CANopen control word Cd15: Bit 15 of the Modbus or CANopen control word		
	PS8	**8 preset speeds**		nO
		Selecting the assigned logic input activates the function. Check that PS4 has been assigned before assigning PS8. nO: Not assigned LI1: Logic input LI1 LI2: Logic input LI2 LI3: Logic input LI3 LI4: Logic input LI4 LI5: Logic input LI5 LI6: Logic input LI6 If LAC = L3, the following assignments are possible: Cd11: Bit 11 of the Modbus or CANopen control word Cd12: Bit 12 of the Modbus or CANopen control word Cd13: Bit 13 of the Modbus or CANopen control word Cd14: Bit 14 of the Modbus or CANopen control word Cd15: Bit 15 of the Modbus or CANopen control word		

Application functions menu FUn-

Code		Description	Adjustment range	Factory setting
	PS16	**16 preset speeds**		nO
		Selecting the assigned logic input activates the function. Check that PS8 has been assigned before assigning PS16. nO: Not assigned LI1: Logic input LI1 LI2: Logic input LI2 LI3: Logic input LI3 LI4: Logic input LI4 LI5: Logic input LI5 LI6: Logic input LI6 If LAC = L3, the following assignments are possible: Cd11: Bit 11 of the Modbus or CANopen control word Cd12: Bit 12 of the Modbus or CANopen control word Cd13: Bit 13 of the Modbus or CANopen control word Cd14: Bit 14 of the Modbus or CANopen control word Cd15: Bit 15 of the Modbus or CANopen control word		
	SP2	**2nd preset speed** (1)	0.0 to 500.0 Hz	10 Hz
	SP3	**3rd preset speed** (1)	0.0 to 500.0 Hz	15 Hz
	SP4	**4th preset speed** (1)	0.0 to 500.0 Hz	20 Hz
	SP5	**5th preset speed** (1)	0.0 to 500.0 Hz	25 Hz
	SP6	**6th preset speed** (1)	0.0 to 500.0 Hz	30 Hz
	SP7	**7th preset speed** (1)	0.0 to 500.0 Hz	35 Hz
	SP8	**8th preset speed** (1)	0.0 to 500.0 Hz	40 Hz
	SP9	**9th preset speed** (1)	0.0 to 500.0 Hz	45 Hz
	SP10	**10th preset speed** (1)	0.0 to 500.0 Hz	50 Hz
	SP11	**11th preset speed** (1)	0.0 to 500.0 Hz	55 Hz
	SP12	**12th preset speed** (1)	0.0 to 500.0 Hz	60 Hz
	SP13	**13th preset speed** (1)	0.0 to 500.0 Hz	70 Hz
	SP14	**14th preset speed** (1)	0.0 to 500.0 Hz	80 Hz
	SP15	**15th preset speed** (1)	0.0 to 500.0 Hz	90 Hz
	SP16	**16th preset speed** (1)	0.0 to 500.0 Hz	100 Hz

(1) Parameter can also be accessed in the settings menu (SEt-).

These parameters only appear if the function has been enabled.

Application functions menu FUn-

Code		Description	Adjustment range	Factory setting
JOG-		**Jog operation**		
	JOG	**Jog operation**		If tCC = 2C: nO If tCC = 3C: LI4 If tCC = LOC: nO
		Selecting the assigned logic input activates the function. nO: Not assigned LI1: Logic input LI1 LI2: Logic input LI2 LI3: Logic input LI3 LI4: Logic input LI4 LI5: Logic input LI5 LI6: Logic input LI6 Example: 2-wire control operation (tCC = 2C) 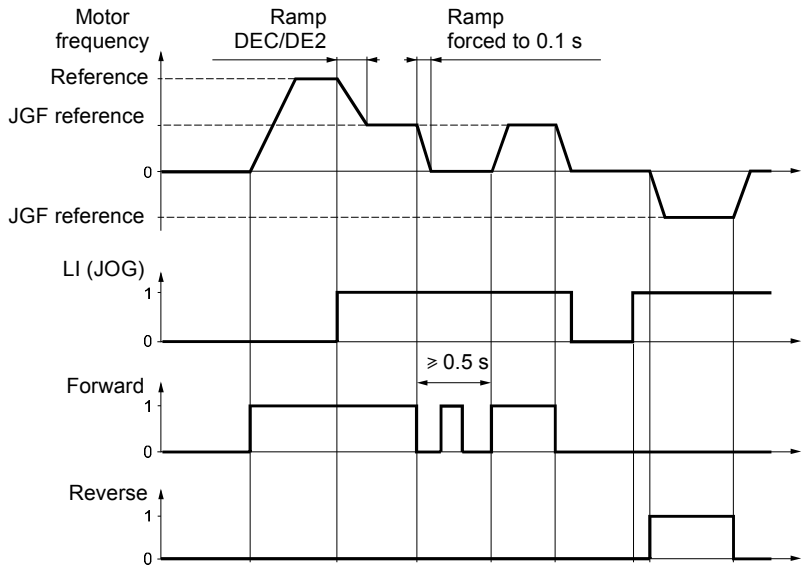 		
	JGF	**Jog operation reference** (1)	0 to 10 Hz	10 Hz

(1) Parameter can also be accessed in the settings menu (SEt-).

These parameters only appear if the function has been enabled.

+/- speed

The function can only be accessed if LAC = L2 or L3 (see page 33).
Two types of operation are available.

1 Use of single action buttons: Two logic inputs are required in addition to the operating direction(s).
The input assigned to the "+ speed" command increases the speed, the input assigned to the "- speed" command decreases the speed.

2 Use of double action buttons: Only one logic input assigned to "+ speed" is required.

+ speed/- speed with double action buttons:

Description: 1 button pressed twice for each direction of rotation. Each action closes a contact.

	Released (- speed)	1st press (speed maintained)	2nd press (+ speed)
Forward button	–	a	a and b
Reverse button	–	c	c and d

Example of wiring:

LI1: forward
LIx: reverse
LIy: + speed

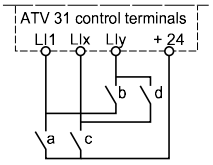

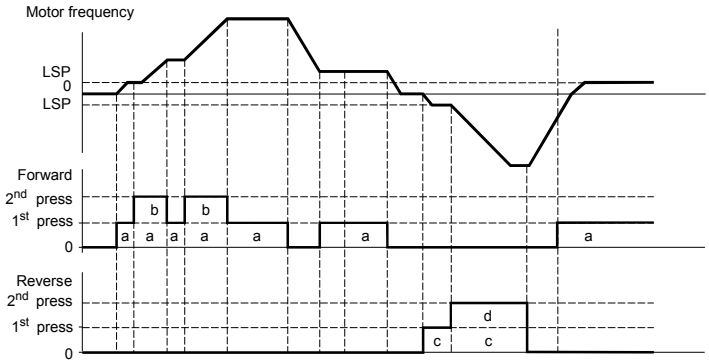

This type of +/- speed is incompatible with 3-wire control.

Whichever type of operation is selected, the max. speed is set by HSP (see page 16).

Note:
If the reference is switched via rFC (see page 34) from any reference channel to another with "+/- speed" the value of reference rFr (after ramp) is copied at the same time. This prevents the speed being incorrectly reset to zero when switching takes place.

Application functions menu FUn-

Code		Description	Adjustment range	Factory setting
UPd-		**+/- speed (motorized potentiometer)** The function can only be accessed if LAC = L2 or L3 and UPdH or UPdt has been selected (see page 33).		
	USP	**+ speed** Can only be accessed for UPdt.		nO
		Selecting the assigned logic input activates the function. nO: Not assigned LI1: Logic input LI1 LI2: Logic input LI2 LI3: Logic input LI3 LI4: Logic input LI4 LI5: Logic input LI5 LI6: Logic input LI6		
	dSP	**- speed** Can only be accessed for UPdt.		nO
		Selecting the assigned logic input activates the function. nO: Not assigned LI1: Logic input LI1 LI2: Logic input LI2 LI3: Logic input LI3 LI4: Logic input LI4 LI5: Logic input LI5 LI6: Logic input LI6		
	Str	**Save reference**		nO
		Associated with the "+/- speed" function, this parameter can be used to save the reference: • When the run commands disappear (saved to RAM) • When the mains supply or the run commands disappear (saved to EEPROM) On the next start-up, the speed reference is the last reference saved. nO: No save rAM: Save to RAM EEP: Save to EEPROM		

These parameters only appear if the function has been enabled.

PI regulator

Diagram

The function is activated by assigning an analog input to the PI feedback (measurement).

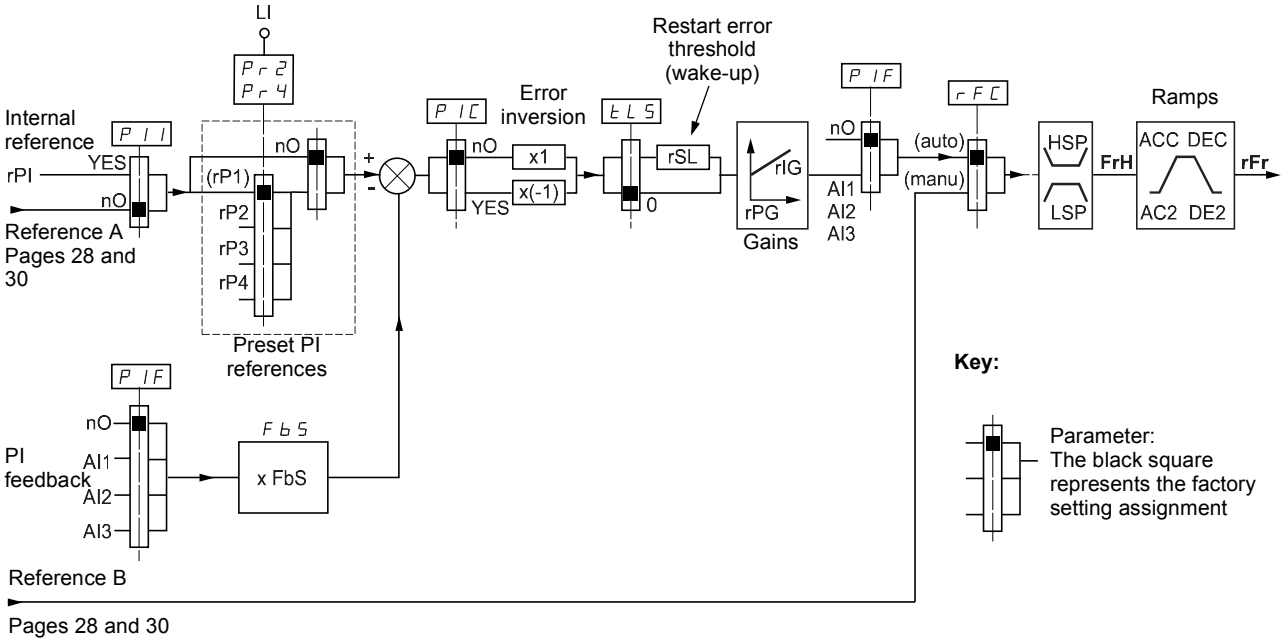

PI feedback:
The PI feedback must be assigned to one of the analog inputs (AI1, AI2 or AI3).

PI reference:
The PI reference can be assigned to the following parameters in order of priority:
- Preset references via logic inputs (rP2, rP3, rP4)
- Internal reference (rPI)
- Reference Fr1 (see page 33)

Combination table for preset PI references

LI (Pr4)	LI (Pr2)	Pr2 = nO	Reference
			rPI or Fr1
0	0		rPI or Fr1
0	1		rP2
1	0		rP3
1	1		rP4

Parameters which can be accessed in the settings menu (SEt-):
- Internal reference (rPI)
- Preset references (rP2, rP3, rP4)
- Regulator proportional gain (rPG)
- Regulator integral gain (rIG)
- FbS parameter:
  The FbS parameter can be used to scale the reference on the basis of the variation range of the PI feedback (sensor rating).
  E.g.: Pressure control
  PI reference (process) 0 - 5 bar (0 - 100%)
  Rating of pressure sensor 0 - 10 bar
  FbS = Max. sensor scale/Max. process
  FbS = 10/5= 2
- rSL parameter:
  Can be used to set the PI error threshold above which the PI regulator will be reactivated (wake-up) after a stop due to the max. time threshold being exceeded at low speed (tLS).
- Reversal of the direction of correction (PIC): If PIC = nO, the speed of the motor will increase when the error is positive, for example: pressure control with a compressor. If PIC = YES, the speed of the motor will decrease when the error is positive, for example: temperature control via a cooling fan.

"Manual - Automatic" operation with PI

This function combines the PI regulator and the switching of reference rFC (page 34). The speed reference is given by Fr2 or by the PI function, depending on the state of the logic input.

Setting up the PI regulator

1 Configuration in PI mode
See the diagram on page 49.

2 Perform a test in factory settings mode (in most cases, this will be sufficient).
To optimize the drive, adjust rPG or rIG gradually and independently and observe the effect on the PI feedback in relation to the reference.

3 If the factory settings are unstable or the reference is incorrect:

Perform a test with a speed reference in Manual mode (without PI regulator) and with the drive on load for the speed range of the system:
- In steady state, the speed must be stable and comply with the reference and the PI feedback signal must be stable.
- In transient state, the speed must follow the ramp and stabilize quickly and the PI feedback must follow the speed.

If this is not the case, see the settings for the drive and/or sensor signal and cabling.

Switch to PI mode.
Set brA to no (no auto-adaptation of the ramp).
Set the speed ramps (ACC, dEC) to the minimum permitted by the mechanics without triggering an ObF fault.
Set the integral gain (rIG) to minimum.
Observe the PI feedback and the reference.
Do several RUN/STOP or vary the load or reference rapidly.
Set the proportional gain (rPG) in order to ascertain the ideal compromise between response time and stability in transient phases (slight overshoot and 1 to 2 oscillations before stabilizing).
If the reference varies from the preset value in steady state, gradually increase the integral gain (rIG), reduce the proportional gain (rPG) in the event of instability (pump applications), find a compromise between response time and static precision (see diagram).
Perform in-production tests throughout the reference range.

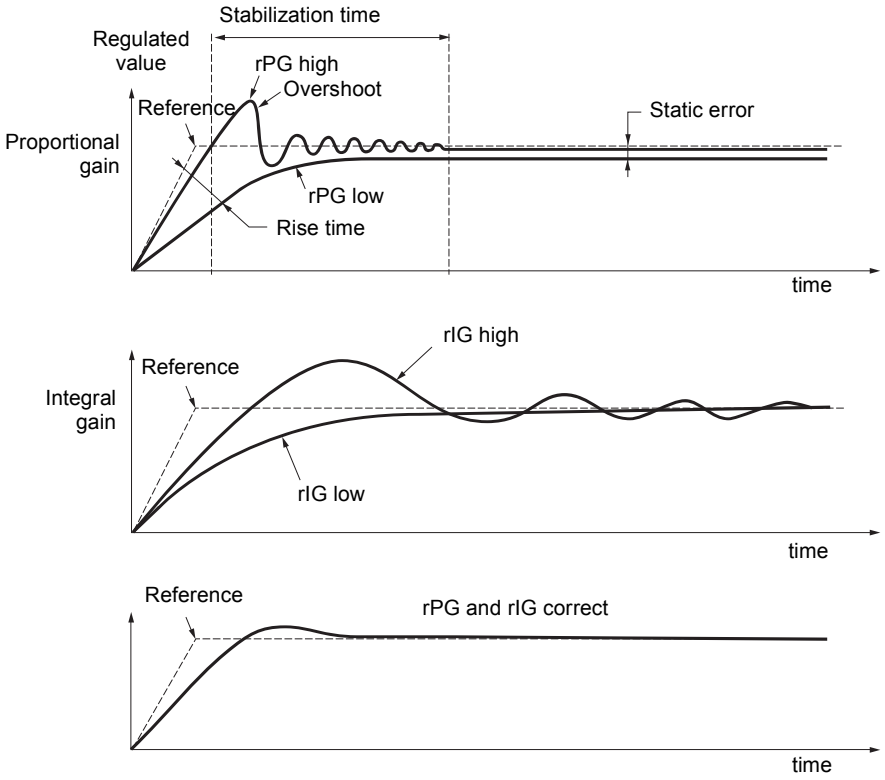

The oscillation frequency depends on the system kinematics.

Parameter	Rise time	Overshoot	Stabilization time	Static error
rPG	↘ ↘	↗	=	↘
rIG	↘	↗ ↗	↗	↘ ↘

Application functions menu FUn-

Code		Description	Adjustment range	Factory setting
PI-		**PI regulator**		
	PIF	**PI regulator feedback**		nO
		nO: Not assigned AI1: Analog input AI1 AI2: Analog input AI2 AI3: Analog input AI3		
	rPG	**PI regulator proportional gain** (1)	0.01 to 100	1
		Contributes to dynamic performance during rapid changes in the PI feedback.		
	rIG	**PI regulator integral gain** (1)	0.01 to 100	1
		Contributes to static precision during slow changes in the PI feedback.		
	FbS	**PI feedback multiplication coefficient** (1)	0.1 to 100	1
		For process adaptation		
	PIC	Reversal of the direction of correction of the PI regulator (1)		nO
		nO: normal YES: reverse		
	Pr2	**2 preset PI references**		nO
		Selecting the assigned logic input activates the function. nO: Not assigned LI1: Logic input LI1 LI2: Logic input LI2 LI3: Logic input LI3 LI4: Logic input LI4 LI5: Logic input LI5 LI6: Logic input LI6 If LAC = L3, the following assignments are possible: Cd11: Bit 11 of the Modbus or CANopen control word Cd12: Bit 12 of the Modbus or CANopen control word Cd13: Bit 13 of the Modbus or CANopen control word Cd14: Bit 14 of the Modbus or CANopen control word Cd15: Bit 15 of the Modbus or CANopen control word		
	Pr4	**4 preset PI references**		nO
		Selecting the assigned logic input activates the function. Check that Pr2 has been assigned before assigning Pr4. nO: Not assigned LI1: Logic input LI1 LI2: Logic input LI2 LI3: Logic input LI3 LI4: Logic input LI4 LI5: Logic input LI5 LI6: Logic input LI6 If LAC = L3, the following assignments are possible: Cd11: Bit 11 of the Modbus or CANopen control word Cd12: Bit 12 of the Modbus or CANopen control word Cd13: Bit 13 of the Modbus or CANopen control word Cd14: Bit 14 of the Modbus or CANopen control word Cd15: Bit 15 of the Modbus or CANopen control word		
	rP2	**2nd preset PI reference** (1)	0 to 100%	30%
		Only appears if Pr2 has been enabled by selecting an input.		
	rP3	**3rd preset PI reference** (1)	0 to 100%	60%
		Only appears if Pr4 has been enabled by selecting an input.		
	rP4	**4th preset PI reference** (1)	0 to 100%	90%
		Only appears if Pr4 has been enabled by selecting an input.		

(1) Parameter can also be accessed in the settings menu (SEt-).

These parameters only appear if the function has been enabled.

Application functions menu FUn-

Code		Description	Adjustment range	Factory setting
PI- (continued)	rSL	**Restart error threshold ("wake-up" threshold)**	0 to 100%	0
		If the "PI" and "Low speed operating time"(tLS) (see page 18) functions are configured at the same time, the PI regulator may attempt to set a speed lower than LSP. This results in unsatisfactory operation which consists of starting, operating at low speed then stopping, and so on... Parameter rSL (restart error threshold) can be used to set a minimum PI error threshold for restarting after a stop at prolonged LSP. The function is inactive if tLS = 0.		
	PII	**Internal PI regulator reference**		nO
		nO: The PI regulator reference is Fr1, except for UPdH and UPdt (+/- speed cannot be used as the PI regulator reference). YES: The PI regulator reference is internal via parameter rPI.		
	rPI	**Internal PI regulator reference** (1)	0 to 100%	0

(1) Parameter can also be accessed in the settings menu (SEt-).

These parameters only appear if the function has been enabled.

Brake control

The function can only be accessed if LAC = L2 or L3 (page 28).
This function, which can be assigned to relay R2 or to logic output AOC, enables the drive to manage an electromagnetic brake.

Principle:

Synchronize brake release with the build-up of torque during start-up and brake engage at zero speed on stopping, to prevent jolting.

Brake sequence

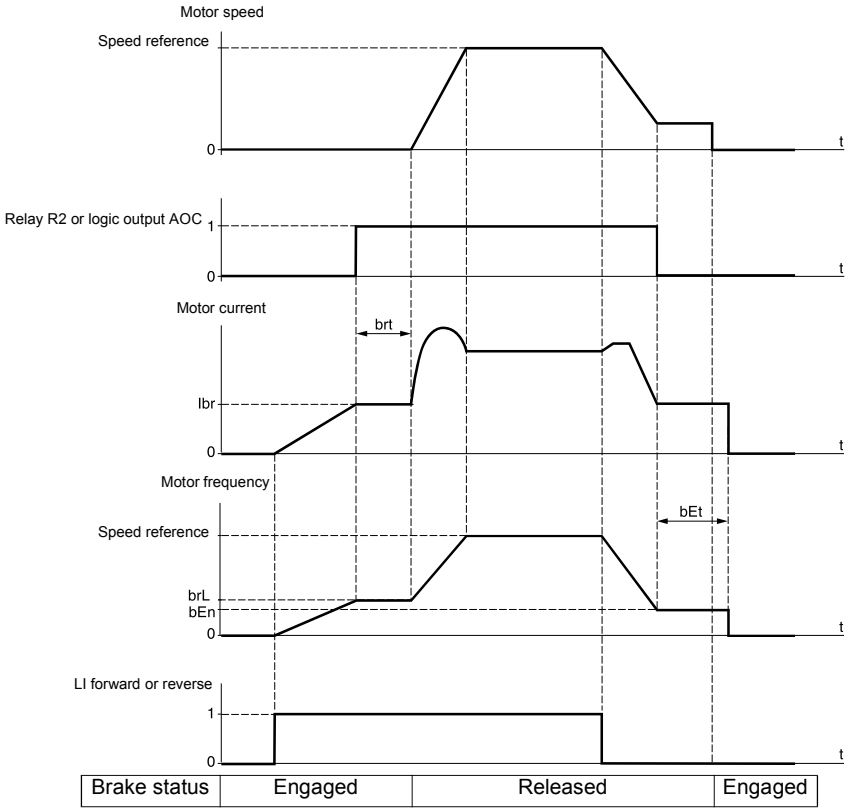

Settings which can be accessed in the FUn- menu:
- Brake release frequency (brL)
- Brake release current (Ibr)
- Brake release time (brt)
- Brake engage frequency (bEn)
- Brake engage time (bEt)
- Brake release pulse (bIP)

Recommended settings for brake control:
1 Brake release frequency:
- Horizontal movement: Set to 0.
- Vertical movement: Set to a frequency equal to the nominal slip of the motor in Hz.

2 Brake release current (Ibr):
- Horizontal movement: Set to 0.
- Vertical movement: Preset the nominal current of the motor then adjust it in order to prevent jolting on start-up, making sure that the maximum load is held when the brake is released.

3 Brake release time (brt):
Adjust according to the type of brake. It is the time required for the mechanical brake to release.

4 Brake engage frequency (bEn)
- Horizontal movement: Set to 0.
- Vertical movement: Set to a frequency equal to the nominal slip of the motor in Hz. **Caution: bEn maxi = LSP, you must therefore first set LSP to a sufficient value**.

5 Brake engage time (bEt):
Adjust according to the type of brake. It is the time required for the mechanical brake to engage.

6 Brake release pulse:
- Horizontal movement: Set to nO.
- Vertical movement: Set to YES and check that the motor torque direction for "Forward" control corresponds to the upward direction of the load. If necessary, reverse two motor phases. This parameter generates motor torque in an upward direction regardless of the direction of operation commanded in order to maintain the load whilst the brake is releasing.

Application functions menu FUn-

Code		Description	Adjustment range	Factory setting
bLC-		**Brake control** The function can only be accessed if LAC = L2 or L3 (page 28).		
	bLC	**Brake control configuration**		nO
		nO: Not assigned r2: Relay R2 dO: Logic output AOC If bLC is assigned, parameter FLr (page 61) and brA (page 38) are forced to nO, and parameter OPL (page 61) is forced to YES.		
	brL	**Brake release frequency**	0.0 to 10.0 Hz	According to drive rating
	Ibr	**Motor current threshold for brake release**	0 to 1.36 In (1)	According to drive rating
	brt	**Brake release time**	0 to 5 s	0.5 s
	LSP	**Low speed**	0 to HSP (page 16)	0 Hz
		Motor frequency at min. reference. This parameter can also be modified in the SEt- menu (page 16).		
	bEn	**Brake engage frequency threshold**	nO - 0 to LSP	nO
		nO: Not adjusted 0 to LSP: Adjustment range (Hz) If bLC is assigned and bEn remains equal to nO, the drive will lock on a bLF fault at the first run command.		
	bEt	**Brake engage time**	0 to 5 s	0.5s
	bIP	**Brake release pulse**		nO
		nO: Whilst the brake is releasing, the motor torque direction corresponds to the direction of rotation commanded. YES: Whilst the brake is releasing, the motor torque direction is always forward, regardless of the direction of operation commanded. ⚠ Check that the motor torque direction for "Forward" control corresponds to the upward direction of the load. If necessary, reverse two motor phases.		

(1) In corresponds to the nominal drive current indicated in the Installation Manual and on the drive rating plate.

These parameters only appear if the function has been enabled.

Code		Description	Adjustment range	Factory setting
LC2-		**Switching for second current limit** The function can only be accessed if LAC = L2 or L3 (page 28).		
	LC2	**Switching for second current limit**		nO
		Selecting the assigned logic input activates the function. nO: Not assigned LI1: Logic input LI1 LI2: Logic input LI2 LI3: Logic input LI3 LI4: Logic input LI4 LI5: Logic input LI5 LI6: Logic input LI6 If LAC = L3, the following assignments are possible: Cd11: Bit 11 of the Modbus or CANopen control word Cd12: Bit 12 of the Modbus or CANopen control word Cd13: Bit 13 of the Modbus or CANopen control word Cd14: Bit 14 of the Modbus or CANopen control word Cd15: Bit 15 of the Modbus or CANopen control word CL1 is enabled when the logic input or control word bit is in state 0 (SEt- menu page 18). CL2 is enabled when the logic input or control word bit is in state 1.		
	CL2	**2nd current limit** (1)	0.25 to 1.5 In (2)	1.5 In (2)

(1) Parameter can also be accessed in the settings menu (SEt-).
(2) In corresponds to the nominal drive current indicated in the Installation Manual and on the drive rating plate.

These parameters only appear if the function has been enabled.

Application functions menu FUn-

Code		Description	Adjustment range	Factory setting
CHP-		**Motor switching** The function can only be accessed if LAC = L2 or L3 (page 28).		
	CHP	**Switching, motor 2**		nO
		nO: Not assigned LI1: Logic input LI1 LI2: Logic input LI2 LI3: Logic input LI3 LI4: Logic input LI4 LI5: Logic input LI5 LI6: Logic input LI6 If LAC = L3, the following assignments are possible: Cd11: Bit 11 of the Modbus or CANopen control word Cd12: Bit 12 of the Modbus or CANopen control word Cd13: Bit 13 of the Modbus or CANopen control word Cd14: Bit 14 of the Modbus or CANopen control word Cd15: Bit 15 of the Modbus or CANopen control word LI or bit = 0: Motor 1 LI or bit = 1: Motor 2 ⚠ - The motor switching function disables motor thermal protection. An external means of motor thermal protection must therefore be provided. - If you use this function, do not use the tUn auto-tuning function (page 21) on motor 2 and do not configure tUn = rUn or POn. - Changes to parameters are only taken into account when the drive is locked.		
	UnS2	**Nominal motor voltage (motor 2) given on the rating plate**	According to drive rating	According to drive rating
		ATV31●●●M2: 100 to 240 V ATV31●●●M3X: 100 to 240 V ATV31●●●N4: 100 to 500 V ATV31●●●S6X: 100 to 600 V		
	FrS2	**Nominal motor frequency (motor 2) given on the rating plate**	10 to 500 Hz	50 Hz
		⚠ The ratio $\frac{\text{UnS (in volts)}}{\text{FrS (in Hz)}}$ must not exceed the following values ATV31●●●M2: 7 max. ATV31●●●M3X: 7 max. ATV31●●●N4: 14 max. ATV31●●●S6X: 17 max. The factory setting is 50 Hz, or 60 Hz if bFr is set to 60 Hz.		
	nCr2	**Nominal motor current (motor 2) given on the rating plate**	0.25 to 1.5 In (2)	According to drive rating
	nSP2	**Nominal motor speed (motor 2) given on the rating plate**	0 to 32760 RPM	According to drive rating
		0 to 9999 RPM then 10.00 to 32.76 KRPM If, rather than the nominal speed, the rating plate indicates the synchronous speed and the slip in Hz or as a %, calculate the nominal speed as follows: • Nominal speed = Synchronous speed x $\frac{100 - \text{slip as a \%}}{100}$ or • Nominal speed = Synchronous speed x $\frac{50 - \text{slip in Hz}}{50}$ (50 Hz motors) or • Nominal speed = Synchronous speed x $\frac{60 - \text{slip in Hz}}{60}$ (60 Hz motors)		

(1) Parameter can also be accessed in the settings menu (SEt-).
(2) In corresponds to the nominal drive current indicated in the Installation Manual and on the drive rating plate.

These parameters only appear if the function has been enabled.

Code		Description	Adjustment range	Factory setting
CHP- (continued)	COS2	**Motor Cos Phi (motor 2) given on the rating plate**	0.5 to 1	According to drive rating
	UFt2	**Selection of the type of voltage/frequency ratio motor 2**		n
		L : Constant torque for motors connected in parallel or special motors P: Variable torque: Pump and fan applications n: Sensorless flux vector control for constant torque applications nLd: Energy saving, for variable torque applications not requiring high dynamics (behaves in a similar way to the P ratio at no load and the n ratio on load). 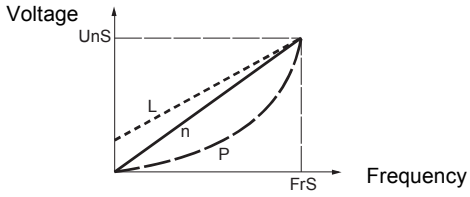		
	UFr2	**IR compensation/Voltage boost, motor 2** (1)	0 to 100%	20
		For UFt2 = n or nLd: IR compensation. For UFt2 = L or P: Voltage boost. Used to optimize the torque at very low speed (increase UFr2 if the torque is insufficient). Check that the value of UFr2 is not too high for when the motor is warm (risk of instability). Modifying UFt2 will cause UFr2 to return to the factory setting (20%).		
	FLG2	**Frequency loop gain, motor 2** (1)	1 to 100%	20
		Parameter can only be accessed if UFt2 = n or nLd. The FLG2 parameter adjusts the drive's ability to follow the speed ramp based on the inertia of the machine being driven. Too high a gain may result in operating instability. FLG2 low 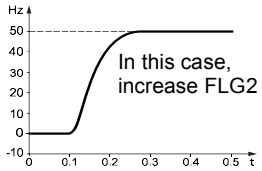 FLG2 correct 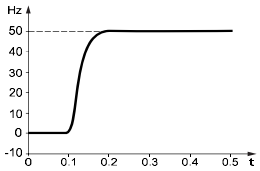 FLG2 high 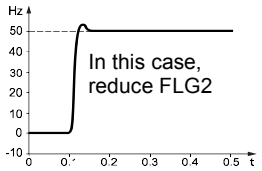		
	StA2	**Frequency loop stability, motor 2** (1)	1 to 100%	20
		Parameter can only be accessed if UFt2 = n or nLd. Used to adapt the return to steady state after a speed transient (acceleration or deceleration), according to the dynamics of the machine. Gradually increase the stability to avoid any overspeed. StA2 low 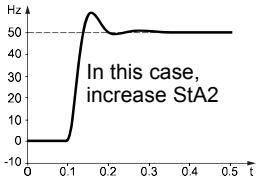 StA2 correct 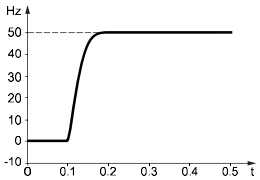 StA2 high 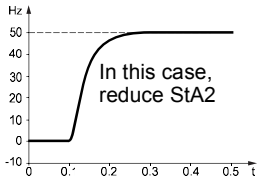		
	SLP2	**Slip compensation, motor 2** (1)	0 to 150%	100
		Parameter can only be accessed if UFt2 = n or nLd. Used to adjust the slip compensation value fixed by nominal motor speed. The speeds given on motor rating plates are not necessarily exact. • If slip setting < actual slip: the motor is not rotating at the correct speed in steady state. • If slip setting > actual slip: the motor is overcompensated and the speed is unstable.		

(1) Parameter can also be accessed in the settings menu (SEt-).

These parameters only appear if the function has been enabled.

Management of limit switch

The function can only be accessed if LAC = L2 or L3 (page 28).
It can be used to manage the operation of one or two limit switches (1 or 2 directions of operation):
- Assignment of one or two logic inputs (forward limit, reverse limit)
- Selection of the type of stop (on ramp, fast or freewheel)
  Following a stop, the motor is permitted to restart in the opposite direction only.
- The stop is performed when the input is in state 0. The direction of operation is authorized in state 1.

Code		Description	Adjustment range	Factory setting
LSt-		**Management of limit switches** The function can only be accessed if LAC = L2 or L3 (page 28).		
	LAF	**Limit, forward direction**		nO
		nO: Not assigned LI1: Logic input LI1 LI2: Logic input LI2 LI3: Logic input LI3 LI4: Logic input LI4 LI5: Logic input LI5 LI6: Logic input LI6		
	LAr	**Limit, reverse direction**		nO
		nO: Not assigned LI1: Logic input LI1 LI2: Logic input LI2 LI3: Logic input LI3 LI4: Logic input LI4 LI5: Logic input LI5 LI6: Logic input LI6		
	LAS	**Type of limit switch stop**		nSt
		rMP: On ramp FSt: Fast stop nSt: Freewheel stop		

These parameters only appear if the function has been enabled via the selection of a logic input.

Application functions menu FUn-

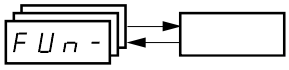

SCS	**Saving the configuration (1)**		nO
	nO: Function inactive Str 1: Saves the current configuration (but not the result of auto-tuning) to EEPROM. SCS automatically switches to nO as soon as the save has been performed. This function is used to keep another configuration in reserve, in addition to the current configuration. When drives leave the factory the current configuration and the backup configuration are both initialized with the factory configuration. • If the remote terminal option is connected to the drive, the following additional selection options will appear: FIL 1, FIL2, FIL3, FIL4 (files available in the remote terminal's EEPROM memory for saving the current configuration). They can be used to store between 1 and 4 different configurations which can also be stored on or even transferred to other drives of the same rating. SCS automatically switches to nO as soon as the save has been performed.		
FCS	**Return to factory setting/restore configuration (1)**		nO
	nO: Function inactive rECI: The current configuration becomes identical to the backup configuration previously saved by SCS = Strl. rECI is only visible if the backup has been carried out. FCS automatically changes to nO as soon as this action has been performed. InI: The current configuration becomes identical to the **factory setting**. FCS automatically changes to nO as soon as this action has been performed. • If the remote terminal option is connected to the drive, the following additional selection options appear, as long as the corresponding files have been loaded in the remote terminal's EEPROM memory (0 to 4 files): FIL 1, FIL2, FIL3, FIL4. They enable the current configuration to be replaced with one of the 4 configurations that may be loaded on the remote terminal. FCS automatically changes to nO as soon as this action has been performed. **Caution:** If nAd appears on the display briefly once FCS has switched to nO, this means that the configuration transfer is not possible and has not been performed (different drive ratings for example). If nEr appears on the display briefly once the parameter has switched to nO, this means that a configuration transfer error has occurred and the factory settings must be restored using InI. In both cases, check the configuration to be transferred before trying again. ⚠ For rECI, InI and FL1 to FL4 to be taken into account, the ENT key must be held down for 2 s.		

(1) SCS and FCS can be accessed via several configuration menus but they concern all menus and parameters as a whole.

Fault menu FLt-

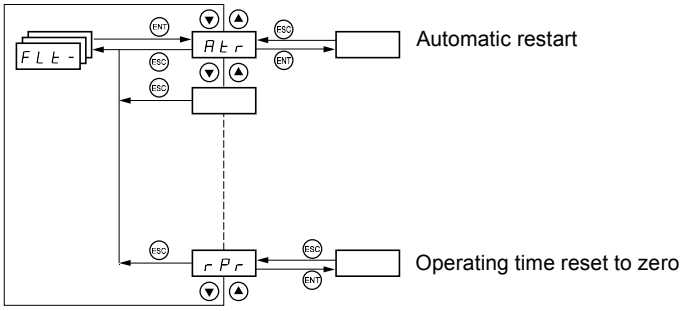

Automatic restart

Operating time reset to zero

The parameters can only be modified when the drive is stopped and no run command is present.
On the optional remote terminal, this menu can be accessed with the switch in the position.

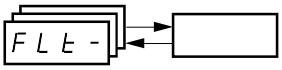

Code	Description	Factory setting
Atr	**Automatic restart**	nO
	nO: Function inactive YES: Automatic restart, after locking on a fault, if the fault has disappeared and the other operating conditions permit the restart. The restart is performed by a series of automatic attempts separated by increasingly longer waiting periods: 1 s, 5 s, 10 s, then 1 min for the following periods. If the restart has not taken place once the configurable time tAr has elapsed, the procedure is aborted and the drive remains locked until it is powered down then powered up. The following faults permit this function: External fault (EPF) Loss of 4-20 mA reference (LFF) CANopen fault (COF) System overvoltage (OSF) Loss of a line phase (PHF) Loss of a motor phase (OPF) DC bus overvoltage (ObF) Motor overload (OLF) Serial link (SLF) Drive overheating (OHF) The drive safety relay remains activated if this function is active. The speed reference and the operating direction must be maintained. Use 2-wire control (tCC = 2C) with tCt = LEL or PFO (page 23). ⚠ **Check that an automatic restart will not endanger personnel or equipment in any way.**	
tAr	**Max. duration of restart process**	5
	5: 5 minutes 10: 10 minutes 30: 30 minutes 1h: 1 hour 2h: 2 hours 3h: 3 hours Ct: Unlimited This parameter appears if Atr = YES. It can be used to limit the number of consecutive restarts on a recurrent fault.	
rSF	**Reset of current fault**	no
	nO: Not assigned LI1: Logic input LI1 LI2: Logic input LI2 LI3: Logic input LI3 LI4: Logic input LI4 LI5: Logic input LI5 LI6: Logic input LI6	

These parameters only appear if the function has been enabled.

Fault menu FLt-

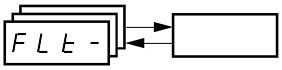

Code	Description	Factory setting
FLr	**Flying restart** (automatic catching a spinning load on ramp)	nO
	Used to enable a smooth restart if the run command is maintained after the following events: - Loss of line supply or disconnection - Reset of current fault or automatic restart - Freewheel stop The speed given by the drive resumes from the estimated speed of the motor at the time of the restart, then follows the ramp to the reference speed. This function requires 2-wire control (tCC = 2C) with tCt = LEL or PFO. nO: Function inactive YES: Function active When the function is operational, it activates at each run command, resulting in a slight delay (1 second max.). FLr is forced to nO if brake control (bLC) is assigned (page 54).	
EtF	**External fault**	nO
	nO: Not assigned LI1: Logic input LI1 LI2: Logic input LI2 LI3: Logic input LI3 LI4: Logic input LI4 LI5: Logic input LI5 LI6: Logic input LI6 If LAC = L3, the following assignments are possible: Cd11: Bit 11 of the Modbus or CANopen control word Cd12: Bit 12 of the Modbus or CANopen control word Cd13: Bit 13 of the Modbus or CANopen control word Cd14: Bit 14 of the Modbus or CANopen control word Cd15: Bit 15 of the Modbus or CANopen control word	
EPL	**Stop mode in the event of an external fault EPF**	YES
	nO: Fault ignored YES: Fault with freewheel stop rMP: Fault with stop on ramp FSt: Fault with fast stop	
OPL	**Configuration of motor phase loss fault**	YES
	nO: Function inactive YES: Triggering of OPF fault OAC: No fault triggered but management of the output voltage in order to avoid an overcurrent when the link with the motor is re-established and flying restart even if FLr = nO. To be used with downstream contactor. OPL is forced to YES if brake control (bLC) is assigned (page 54).	
IPL	**Configuration of line phase loss fault**	YES
	This parameter is only accessible on 3-phase drives. nO: Fault ignored YES: Fault with fast stop	
OHL	**Stop mode in the event of a drive overheating fault OHF**	YES
	nO: Fault ignored YES: Fault with freewheel stop rMP: Fault with stop on ramp FSt: Fault with fast stop	
OLL	**Stop mode in the event of a motor overload fault OLF**	YES
	nO: Fault ignored YES: Fault with freewheel stop rMP: Fault with stop on ramp FSt: Fault with fast stop	

Fault menu FLt-

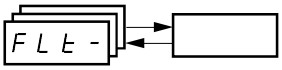

Code	Description	Adjustment range	Factory setting
SLL	**Stop mode in the event of a Modbus serial link fault SLF**		YES
	nO: Fault ignored YES: Fault with freewheel stop rMP: Fault with stop on ramp FSt: Fault with fast stop		
COL	**Stop mode in the event of a CANopen serial link fault COF**		YES
	nO: Fault ignored YES: Fault with freewheel stop rMP: Fault with stop on ramp FSt: Fault with fast stop		
tnL	**Configuration of auto-tuning fault tnF**		YES
	nO: Fault ignored (the drive reverts to the factory settings) YES: Fault with drive locked		
LFL	**Stop mode in the event of a loss of 4 - 20 mA signal fault LFF**		nO
	nO: Fault ignored (only value possible if CrL3 ⩽ 3 mA, see page 24) YES: Fault with freewheel stop LFF: The drive switches to the fallback speed (LFF parameter) rLS: The drive maintains the speed at which it was travelling when the fault occurred until the fault has disappeared. rMP: Fault with stop on ramp FSt: Fault with fast stop ⚠ Before setting LFL to YES , rMP or FSt, check the connection of input AI3. Otherwise, the drive may immediately switch to an LFF fault.		
LFF	**Fallback speed**	0 to 500 Hz	10 Hz
	Fallback speed setting for stopping in the event of a fault		
drn	**Derated operation in the event of an overvoltage**		nO
	nO: Function inactive YES: The line voltage monitoring threshold is: ATV31●●●M2: 130 V ATV31●●●M3X: 130 V ATV31●●●N4: 270 V ATV31●●●S6X: 340 V In this case, a line choke must be used and the performance of the drive cannot be guaranteed. In order to assign this function, you must press and hold down the "ENT" key for 2 seconds.		
StP	**Controlled stop on mains power break**		nO
	nO: Locking of the drive and freewheel stopping of the motor nnS: This stop mode uses the inertia to maintain the drive power supply as long as possible. rMP: Stop according to the valid ramp (dEC or dE2) FSt: Fast stop, the stopping time depends on the inertia and the braking ability of the drive.		
InH	**Fault inhibit**		nO
	⚠ Inhibiting faults may damage the drive beyond repair. This would invalidate the guarantee. nO: Not assigned LI1: Logic input LI1 LI2: Logic input LI2 LI3: Logic input LI3 LI4: Logic input LI4 LI5: Logic input LI5 LI6: Logic input LI6 Fault monitoring is active when the input is in state 0. It is inactive when the input is in state 1. All active faults are reset on a rising edge (from 1 to 0) of the input. In order to assign this function, you must press and hold down the "ENT" key for 2 seconds.		
rPr	**Operating time reset to zero**		nO
	nO: No rtH: Operating time reset to zero The rPr parameter automatically falls back to nO as soon as the reset to zero is performed.		

Communication menu COM-

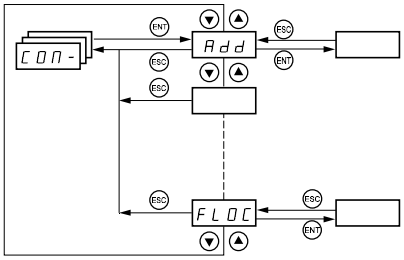

The parameters can only be modified when the drive is stopped and no run command is present. Modifications to parameters Add, tbr, tFO, AdCO and bdCO are only taken into account following a restart.
On the optional remote terminal, this menu can be accessed with the switch in the position.

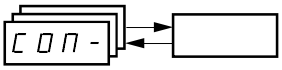

Code	Description	Adjustment range	Factory setting
Add	**Modbus: Drive address**	1 to 247	1
tbr	**Modbus: Transmission speed**		19200
	4.8: 4800 bps 9.6: 9600 bps 19.2: 19200 bps (**Caution:** The remote terminal can only be used with this value.)		
tFO	**Modbus communication format**		8E1
	8O1: 8 data bits, odd parity, 1 stop bit 8E1: 8 data bits, even parity, 1 stop bit (**Caution:** The remote terminal can only be used with this value.) 8n1: 8 data bits, no parity, 1 stop bit 8n2: 8 data bits, no parity, 2 stop bits		
ttO	**Modbus: Time-out**	0.1 to 10 s	10 s
AdCO	**CANopen: Drive address**	0 to 127	0
bdCO	**CANopen: Transmission speed**		125
	10.0: 10 kbps 20.0: 20 kbps 50.0: 50 kbps 125.0: 125 kbps 250.0: 250 kbps 500.0: 500 kbps 1000: 1000 kbps		
ErCO	**CANopen: Error registry** (read-only)		
	0: "No error" 1: "Bus off error" 2: "Life time error" 3: "CAN overrun" 4: "Heartbeat error"		
FLO	**Forced local mode**		nO
	nO: Not assigned LI1: Logic input LI1 LI2: Logic input LI2 LI3: Logic input LI3 LI4: Logic input LI4 LI5: Logic input LI5 LI6: Logic input LI6 In forced local mode, the terminal block and display terminal regain control of the drive.		
FLOC	**Selection of the reference and control channel in forced local mode** Can only be accessed if LAC = 3		AI1 AIP for ATV31●●●A
	In forced local mode, only the speed reference is taken into account. PI functions, summing inputs, etc. are not active. See the diagrams on pages 28 to 31. AI1: Analog input AI1, logic inputs LI AI2: Analog input AI2, logic inputs LI AI3: Analog input AI3, logic inputs LI AIP: Potentiometer (type A drives only), RUN/STOP buttons LCC: Remote terminal: LFr reference page 16, RUN/STOP/FWD/REV buttons.		

These parameters only appear if the function has been enabled.

Display menu SUP-

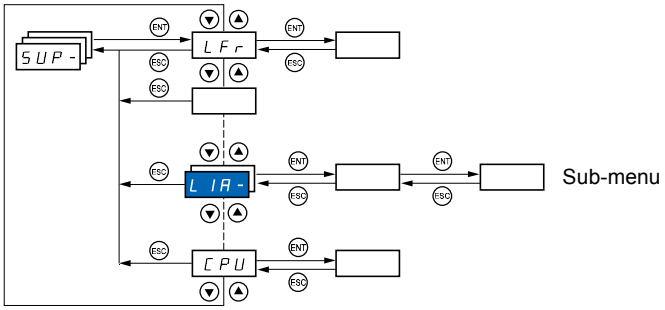

Parameters can be accessed with the drive running or stopped.
On the optional remote terminal, this menu can be accessed with the switch in any position.

Some functions have numerous parameters. In order to clarify programming and avoid having to scroll through endless parameters, these functions have been grouped in sub-menus.
Like menus, sub-menus are identified by a dash after their code: for example.

When the drive is running, the value displayed is that of one of the monitoring parameters. By default, the value displayed is the output frequency applied to the motor (rFr parameter).
Whilst the value of the new monitoring parameter required is being displayed, press and hold down the "ENT" key (2 seconds) to confirm the change of monitoring parameter and store this. From now on, the value of this parameter will be displayed while the drive is running (even after it has been disconnected).
If the new choice is not confirmed by pressing the "ENT" key a second time, the drive will return to the previous parameter after it has been switched off.

Display menu SUP-

Code	Description	Variation range
LFr	**Frequency reference for control via built-in terminal or remote terminal**	0 to 500 Hz
rPI	**Internal PI reference**	0 to 100%
FrH	**Frequency reference before ramp** (absolute value)	0 to 500 Hz
rFr	**Output frequency applied to the motor**	- 500 Hz to + 500 Hz
SPd1 or SPd2 or SPd3	**Output value in customer units** SPd1 or SPd2 or SPd3 depending on the SdS parameter, see page 19 (SPd3 in factory settings mode).	
LCr	**Current in the motor**	
OPr	**Motor power**	
	100% = Nominal motor power, calculated using the parameters entered in the drC- menu.	
ULn	**Line voltage** (gives the line voltage via the DC bus, motor running or stopped)	
tHr	**Motor thermal state**	
	100% = Nominal thermal state 118% = "OLF" threshold (motor overload)	
tHd	**Drive thermal state**	
	100% = Nominal thermal state 118% = "OHF" threshold (motor overload)	
LFt	**Last fault**	
	bLF: Brake control fault CFF: Configuration (parameters) incorrect CFI: Configuration (parameters) invalid COF: Communication fault line 2 (CANopen) CrF: Capacitor pre-charge fault EEF: EEPROM memory fault EPF: External fault InF: Internal fault LFF: 4 - 20 mA fault on AI3 nOF: No fault saved ObF: DC bus overvoltage fault OCF: Overcurrent fault OHF: Drive overheating fault OLF: Motor overload fault OPF: Motor phase loss fault OSF: Line supply overvoltage fault PHF: Line supply phase loss fault SCF: Motor short-circuit fault (phase, earth) SLF: Modbus communication fault SOF: Motor overspeed fault tnF: Auto-tuning fault USF: Line supply undervoltage fault	
Otr	**Motor torque**	
	100% = Nominal motor torque, calculated using the parameters entered in the drC- menu.	
rtH	Operating time	0 to 65530 hours
	Total time the motor has been powered up: 0 to 9999 (hours), then 10.00 to 65.53 (kilo-hours). Can be reset to zero by the rPr parameter in the FLt- menu (see page 62).	

These parameters only appear if the function has been enabled.

Display menu SUP-

Code		Description
	COd	**Terminal locking code**
		Enables the drive configuration to be protected using an access code. ⚠ **Caution: Before entering a code, do not forget to make a careful note of it.** • OFF: No access locking codes - To lock access, enter a code (2 to 9999). The display can be incremented using ▲. Now press "ENT". "On" appears on the screen to indicate that the parameters have been locked. • On: A code is locking access (2 to 9999) - **To unlock access**, enter the code (incrementing the display using ▲) and press "ENT". The code remains on the display and access is unlocked until the next power down. Parameter access will be locked again on the next power-up. - **If an incorrect code is entered**, the display changes to "On" and the parameters remain locked. • XXXX: Parameter access is unlocked (the code remains on the screen). - **To reactivate locking with the same code** when the parameters have been unlocked, return to "On" using the ▼ button then press "ENT". "On" appears on the screen to indicate that the parameters have been locked. - **To lock access with a new code** when the parameters have been unlocked, enter a new code (increment the display using ▲ or ▼) and press "ENT". "On" appears on the screen to indicate that the parameters have been locked. - **To clear locking** when the parameters have been unlocked, return to "OFF" using the ▼ button and press "ENT". "OFF" remains on the screen. The parameters are unlocked and will remain unlocked until the next restart. When access is locked using a code, only the monitoring parameters can be accessed, with only a temporary choice of parameter displayed.
	tUS	**State of auto-tuning**
		tAb: The default stator resistance value is used to control the motor. PEnd: Auto-tuning has been requested but not yet performed. PrOG: Auto-tuning in progress. FAIL: Auto-tuning has failed. dOnE: The stator resistance measured by the auto-tuning function is used to manage the drive. Strd: The cold stator resistance (rSC other than nO) that is used to control the motor.
	UdP	**Indicates the ATV31 firmware version**. E.g.: 1102 = V1.1 IE02.
LIA-		**Logic input functions**
	LI1A LI2A LI3A LI4A LI5A LI6A	Can be used to display the functions assigned to each input. If no functions have been assigned, nO is displayed. Use the ▲ and ▼ arrows to scroll through the functions. If a number of functions have been assigned to the same input, check that they are compatible.
	LIS	Can be used to display the state of the logic inputs (using the segments of the display: high = 1, low = 0) State 1 State 0 LI1 LI2 LI3 LI4 LI5 LI6 Example above: LI1 and LI6 are at 1, LI2 to LI5 are at 0.
AIA-		**Analog input functions**
	AI1A AI2A AI3A	Can be used to display the functions assigned to each input. If no functions have been assigned, nO is displayed. Use the ▲ and ▼ arrows to scroll through the functions. If a number of functions have been assigned to the same input, check that they are compatible.

Maintenance

Servicing

The Altivar 31 does not require any preventative maintenance. It is nevertheless advisable to perform the following regularly:
- Check the condition and tightness of connections.
- Ensure that the temperature around the unit remains at an acceptable level and that ventilation is effective (average service life of fans: 3 to 5 years depending on the operating conditions).
- Remove any dust from the drive.

Assistance with maintenance, fault display

If a problem arises during setup or operation, ensure that the recommendations relating to the environment, mounting and connections have been observed.

The first fault detected is stored and displayed, flashing, on the screen: the drive locks and the fault relay (RA - RC) contact opens, if it has been configured for this function.

Clearing the fault

Cut the power supply to the drive in the event of a non-resettable fault.
Wait for the display to go off completely.
Find the cause of the fault in order to correct it.

The drive is unlocked after a fault by:
- Switching off the drive until the display disappears completely, then switching on again
- Automatically in the cases described in the "automatic restart" function (FLt- menu, Atr = YES)
- Via a logic input when this input is assigned to the "fault reset" function (FLt- menu, rSF = LI●)

Monitoring menu:

This is used to prevent and find the causes of faults by displaying the drive status and its current values.

Spares and repairs:

Consult Schneider Electric product support.

Faults - Causes - Remedies

Drive does not start, no fault displayed

- If the display does not light up, check the power supply to the drive.
- The assignment of the "Fast stop" or "Freewheel stop" functions will prevent the drive from starting if the corresponding logic inputs are not powered up. The ATV31 then displays "nSt" in freewheel stop mode and "FSt" in fast stop mode. This is normal since these functions are active at zero so that the drive will be stopped safely if there is a wire break.
- Check that the run command input(s) have been actuated in accordance with the chosen control mode (tCC parameter in the I-O- menu).
- If an input is assigned to the limit switch function and this input is at zero, the drive can only be started up by sending a command for the opposite direction (see page 58).
- If the reference channel (page 28) or the control channel (page 29) is assigned to Modbus or CANopen, the drive displays nSt on power-up and remains at stop until the communication bus sends a command.

Faults which cannot be reset automatically

The cause of the fault must be removed before resetting by switching off and then on again.
CrF, SOF, tnF, bLF and OPF faults can also be reset remotely via logic input (rSF parameter in the FLt- menu page 60).

Fault	Probable cause	Remedy
bLF Brake sequence	• Brake release current not reached • Brake engage frequency bEn = nO (not adjusted) when brake logic bLC is assigned.	• Check the drive/motor connection. • Check the motor windings. • Check the Ibr setting in the FUn- menu (see page 54). • Carry out the recommended adjustment of bEn (see pages 53 and 54).
CrF Capacitor load circuit	• Load relay control fault or charging resistor damaged	• Replace the drive.
EEF EEPROM fault	• Internal memory fault	• Check the environment (electromagnetic compatibility). • Replace the drive.
InF Internal fault	• Internal fault	• Check the environment (electromagnetic compatibility). • Replace the drive.
OCF Overcurrent	• Incorrect parameters in the SEt- and drC- menus • Inertia or load too high • Mechanical blockage	• Check the SEt- and drC- parameters. • Check the size of the motor/drive/load. • Check the state of the mechanism.
SCF Motor short-circuit	• Short-circuit or earthing at the drive output • Significant earth leakage current at the drive output when several motors are connected in parallel	• Check the cables connecting the drive to the motor, and the motor insulation. • Reduce the switching frequency. • Connect chokes in series with the motor.
SOF Overspeed	• Instability or • Driving load too high	• Check the motor, gain and stability parameters. • Add a braking resistor. • Check the size of the motor/drive/load.
tnF Auto-tuning fault	• Special motor or motor whose power is not suitable for the drive • Motor not connected to the drive	• Use the L or the P ratio (see Uft page 21). • Check the presence of the motor during auto-tuning. • If a downstream contactor is being used, close it during auto-tuning.

Faults - Causes - Remedies

Faults which can be reset with the automatic restart function, after the cause has disappeared

These faults can also be reset by switching the drive off and on again or via a logic input (rSF parameter in the FLt- menu page 60)

Fault	Probable cause	Remedy
COF CAnopen fault	• Interruption in communication on the CANopen bus	• Check the communication bus. • Please refer to the product-specific documentation.
EPF External fault	• According to user	• According to user
LFF Loss of 4-20mA	• Loss of the 4-20 mA reference on input AI3	• Check the connection on input AI3.
ObF Overvoltage during deceleration	• Braking too sudden or driving load	• Increase the deceleration time. • Install a braking resistor if necessary. • Activate the brA function (page 38) if it is compatible with the application.
OHF Drive overheated	• Drive temperature too high	• Check the motor load, the drive ventilation and the environment. Wait for the drive to cool down before restarting.
OLF Motor overload	• Triggered by excessive motor current	• Check the ItH setting (motor thermal protection) (page 16), check the motor load. Wait for the drive to cool down before restarting.
OPF Motor phase loss	• Loss of one phase at drive output • Downstream contactor open • Motor not connected or motor power too low • Instantaneous instability in the motor current	• Check the connections from the drive to the motor. • If a downstream contactor is being used, set OPL to OAC (FLt- menu page 61). • Test on a low power motor or without a motor: In factory settings mode, motor phase loss detection is active (OPL = YES). To check the drive in a test or maintenance environment without having to switch to a motor with the same rating as the drive (particularly useful in the case of high power drives), deactivate motor phase loss detection (OPL = no). • Check and optimize the UFr (page 17), UnS and nCr (page 20) parameters and perform auto-tuning with tUn (page 21).
OSF Overvoltage	• Line voltage too high • Disturbed line supply	• Check the line voltage.
PHF Line phase failure	• Drive incorrectly supplied or a fuse blown • Failure of one phase • 3-phase ATV31 used on a single phase line supply • Unbalanced load This protection only operates with the drive on load.	• Check the power connection and the fuses. • Reset. • Use a 3-phase line supply. • Disable the fault by setting IPL = nO (FLt- menu page 61).
SLF Modbus fault	• Interruption in communication on the Modbus bus	• Check the communication bus. • Please refer to the product-specific documentation.

Faults which can be reset as soon as their cause disappears

Fault	Probable cause	Remedy
CFF Configuration fault	• The current configuration is inconsistent.	• Return to factory settings or call up the backup configuration, if it is valid. See the FCS parameter in the I-O-, drC-, CtL- or FUn- menu.
CFI Configuration fault via serial link	• Invalid configuration The configuration loaded in the drive via the serial link is inconsistent.	• Check the configuration loaded previously. • Load a consistent configuration.
USF Undervoltage	• Line supply too low • Transient voltage dip • Damaged load resistor	• Check the voltage and the voltage parameter. • Replace the drive.

Configuration/Settings table

Drive ATV 31.....
Customer ID no. (if applicable).....

1st level adjustment parameter

bFr

Code	Factory setting	Customer setting
bFr	50	

Settings menu

SEt -

Code	Factory setting	Customer setting
ACC	3 s	s
AC2	5 s	s
dE2	5 s	s
dEC	3 s	s
tA1	10%	%
tA2	10%	%
tA3	10%	%
tA4	10%	%
LSP	0 Hz	Hz
HSP	bFr	Hz
ItH	According to drive rating	A
UFr	20%	%
FLG	20%	%
StA	20%	%
SLP	100 Hz	%
IdC	0.7 In (1)	A
tdC	0.5 s	s
tdC1	0.5 s	s
SdC1	0.7 In (1)	A
tdC2	0 s	s
SdC2	0.5 In (1)	A
JPF	0 Hz	Hz
JF2	0 Hz	Hz
JGF	10 Hz	Hz
rPG	1	
rIG	1 / s	/ s
FbS	1	
PIC	nO	

Code	Factory setting	Customer setting
rP2	30%	%
rP3	60%	%
rP4	90%	%
SP2	10 Hz	Hz
SP3	15 Hz	Hz
SP4	20 Hz	Hz
SP5	25 Hz	Hz
SP6	30 Hz	Hz
SP7	35 Hz	Hz
SP8	40 Hz	Hz
SP9	45 Hz	Hz
SP10	50 Hz	Hz
SP11	55 HZ	Hz
SP12	60 Hz	Hz
SP13	70 Hz	Hz
SP14	80 Hz	Hz
SP15	90 Hz	Hz
SP16	100 Hz	Hz
CL1	1.5 In (1)	A
CL2	1.5 In (1)	A
tLS	0 (no time limit)	s
rSL	0	
UFr2	20%	%
FLG2	20%	%
StA2	20%	%
SLP2	100%	%
Ftd	bFr	Hz
ttd	100%	%
Ctd	In (1)	A
SdS	30	
SFr	4 kHz	kHz

(1) In corresponds to the nominal drive current indicated in the Installation Manual and on the drive rating plate.

These parameters only appear if the corresponding function has been selected in another menu. The majority can also be accessed and adjusted in the function configuration menu.
Those which are underlined appear in factory settings mode.

Configuration/Settings table

Motor control menu

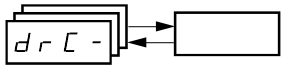

Code	Factory setting	Customer setting
bFr	50 Hz	Hz
UnS	According to drive rating	V
FrS	50 Hz	Hz
nCr	According to drive rating	A
nSP	According to drive rating	RPM
COS	According to drive rating	
rSC	nO	

Code	Factory setting	Customer setting
tUS	tAb	
UFt	n	
nrd	YES	
SFr	4 kHz	kHz
tFr	60 Hz	Hz
SrF	nO	

I/O menu

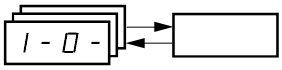

Code	Factory setting	Customer setting
tCC	2C ATV31●●●A: LOC	
tCt	trn	
rrS	if tCC = 2C, LI2 if tCC = 3C, LI3 if tCC = LOC: nO	
CrL3	4 mA	mA
CrH3	20 mA	mA

Code	Factory setting	Customer setting
AOIt	0A	
dO	nO	
r1	FLt	
r2	nO	

Control menu

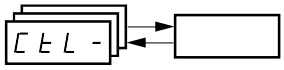

Code	Factory setting	Customer setting
LAC	L1	
Fr1	AI1 AIP for ATV31●●●A	
Fr2	nO	
rFC	Fr1	
CHCF	SIM	
Cd1	tEr LOC for ATV31●●●A	

Code	Factory setting	Customer setting
Cd2	Mdb	
CCS	Cd1	
COP	nO	
LCC	nO	
PSt	YES	
rOt	dFr	

These parameters only appear if the corresponding function has been enabled.

Configuration/Settings table

Application functions menu

Code		Factory setting	Customer setting
rPC -	rPt	LIn	
	tA1	10%	%
	tA2	10%	%
	tA3	10%	%
	tA4	10%	%
	ACC	3 s	s
	dEC	3 s	s
	rPS	nO	
	Frt	0	Hz
	AC2	5 s	s
	dE2	5 s	s
	brA	YES	
StC -	Stt	Stn	
	FSt	nO	
	dCF	4	
	dC1	nO	
	IdC	0.7 In	A
	tdC	0.5 s	s
	nSt	nO	
AdC -	AdC	YES	
	tdC1	0.5 s	s
	SdC1	0.7 In (1)	A
	tdC2	0 s	s
	SdC2	0.5 In (1)	A
SA1 -	SA2	AI2	
	SA3	nO	
PSS -	PS2	If tCC = 2C: LI3 If tCC = 3C: LI4 If tCC = LOC: LI3	
	PS4	If tCC = 2C: LI4 If tCC = 3C: nO If tCC = LOC: LI4	
	PS8	nO	
	PS16	nO	
	SP2	10 Hz	Hz
	SP3	15 Hz	Hz
	SP4	20 Hz	Hz
	SP5	25 Hz	Hz
	SP6	30 Hz	Hz
	SP7	35 Hz	Hz
	SP8	40 Hz	Hz
	SP9	45 Hz	Hz
	SP10	50 Hz	Hz
	SP11	55 Hz	Hz
	SP12	60 Hz	Hz
	SP13	70 Hz	Hz
	SP14	80 Hz	Hz
	SP15	90 Hz	Hz
	SP16	100 Hz	Hz

Code		Factory setting	Customer setting
JOG -	JOG	If tCC = 2C: nO If tCC = 3C: LI4 If tCC = LOC: nO	
	JGF	10 Hz	Hz
UPd -	USP	nO	
	dSP	nO	
	Str	nO	
PI -	PIF	nO	
	rPG	1	
	rIG	1	
	FbS	1	
	PIC	nO	
	Pr2	nO	
	Pr4	nO	
	rP2	30%	%
	rP3	60%	%
	rP4	90%	%
	rSL	0	
	PII	nO	
	rPI	0%	%
bLC -	bLC	nO	
	brL	According to drive rating	Hz
	Ibr		A
	brt	0.5 s	s
	bEn	nO	Hz
	bEt	0.5 s	s
	bIP	nO	
LC2 -	LC2	nO	
	CL2	1.5 In (1)	A
CHP -	CHP	nO	
	UnS2	According to drive rating	V
	FrS2	50 Hz	Hz
	nCr2	According to drive rating	A
	nSP2		RPM
	COS2		
	UFt2	n	
	UFr2	20%	%
	FLG2	20%	%
	StA2	20%	%
	SLP2	100 Hz	Hz
LSt -	LAF	nO	
	LAr	nO	
	LAS	nSt	

(1) In corresponds to the nominal drive current indicated in the Installation Manual and on the drive rating plate.

These parameters only appear if the corresponding function has been enabled. They can also be accessed in the SEt menu.

Configuration/Settings table

Fault menu 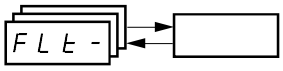

Code	Factory setting	Customer setting
Atr	nO	
tAr	5	
rSF	nO	
FLr	nO	
EtF	nO	
EPL	YES	
OPL	YES	
IPL	YES	
OHL	YES	
OLL	YES	

Code	Factory setting	Customer setting
SLL	YES	
COL	YES	
tnL	YES	
LFL	nO	
LFF	10 Hz	Hz
drn	nO	
StP	nO	
InH	nO	
rPr	nO	

Communication menu 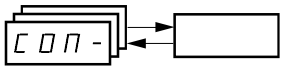

Code	Factory setting	Customer setting
Add	1	
tbr	19200	
tFO	8E1	
ttO	10 s	s
AdCO	0	

Code	Factory setting	Customer setting
bdCO	125	
FLO	nO	
FLOC	AI1 AIP for ATV31●●●A	

These parameters only appear if the corresponding function has been enabled.

Index of parameter codes

AC2	38
ACC	38
AdC	41
AdC0	63
Add	63
A11A	66
A12A	66
A13A	66
AO1t	24
Atr	60
bdC0	63
bEn	54
bEt	54
bFr	20
b IP	54
bLC	54
brA	38
brL	54
brt	54
CCS	35
Cd1	34
Cd2	34
CHCF	34
CHP	56
CL2	55
CL1	18
COd	66
COP	35
COS	20
COS2	57
CrH3	24
CrL3	24
Ctd	19
dCF	39
dC1	39
dE2	38
dEC	16
dO	24
drn	62
dSP	48
EPL	61
ErC0	63
EtF	61
Fb5	51
FCS	22
FLG	17
FLG2	57
FLO	63
FLOC	63
FLr	61
Fr1	33
Fr2	33
FrH	65
FrS	20
FrS2	56
Frt	38
FSt	39
Ftd	19
HSP	16
Ibr	54
IdC	39
InH	62
IPL	61
ItH	16
JF2	18
JGF	46
JOG	46
JPF	18
LAC	33
LAF	58
LAr	58
LAS	58
LC2	55
LCC	35
LCr	65
LFF	62
LFL	62
LFr	65
LFt	65
L11A	66
L12A	66
L13A	66
L14A	66
L15A	66
L16A	66
L1S	66
LSP	16
nCr	20
nCr2	56
nrd	22
nSP	20
nSP2	56
nSt	40
OHL	61
OLL	61
OPL	61
OPr	65
Otr	65
P IC	51
P IF	51
Pr2	51
Pr4	51
PS16	45
PS2	44
PS4	44
PS8	44
PSt	35
r1	24
r2	24
rFC	34
rFr	65
r IG	51
rOt	35
rP2	51
rP3	51
rP4	51
rPG	51
rP1	52
rP1	65
rPr	62
rPS	38
rPt	37
rrS	23
rSC	21
rSF	60
rSL	52
rtH	65
SA2	42
SA3	42
SCS	22
SdC1	41
SdC2	41
SdS	19
SFr	22
SLL	62
SLP	17
SLP2	57
SP10	45
SP11	45
SP12	45
SP13	45
SP14	45
SP15	45
SP16	45
SP2	45
SP3	45
SP4	45
SP5	45
SP6	45
SP7	45
SP8	45
SP9	45
SPd1	65
SPd2	65
SPd3	65
SrF	22
StA	17
StA2	57
StP	62
Str	48
Stt	39
tA1	37
tA2	38
tA3	38
tA4	38
tAr	60
tbr	63
tCC	23
tCt	23
tdC	39
tdC1	41
tdC2	41
tFr	22
tHd	65
tHr	65
tLS	18
ttd	19
ttO	63
tUn	21
tUS	21
tUS	66
UdP	66
UFr	17
UFr2	57
UFt	21
UFt2	57
ULn	65
UnS	20
UnS2	56
USP	48

Index of functions

+/- speed	47
2-wire/3-wire control	23
Analog/logic output AOC/AOV	24
Automatic restart	60
Automatic standstill DC injection	41
Brake control	53
CANopen: Drive address	63
Control and reference channels	26
Control channel switching	35
Current limit	18
DC injection via logic input	39
Deceleration ramp adaptation	38
Drive thermal protection	5
Drive ventilation	5
Fast stop via logic input	39
Flying restart (automatic catching a spinning load on ramp)	61
Forced local mode	63
Freewheel stop via logic input	40
Function access level	33
Jog operation	46
Management of limit switch	58
Modbus: Drive address	63
Motor control auto-tuning	21
Motor switching	56
Motor thermal protection	6
Motor thermal protection - max. thermal current	16
PI regulator	49
Preset speeds	43
Ramp switching	38
Ramps	37
Reference switching	34
Relay r1	24
Relay r2	24
Reset of current fault	60
Return to factory settings/restore configuration	22
Saving the configuration	22
Selection of the type of voltage/frequency ratio	21
Skip frequency	18
Stop modes	39
Summing inputs	42
Switching for second current limit	55
Switching frequency	22

Altivar 31H

Installation manual

Variable speed drives
for asynchronous motors

a brand of
Schneider
Electric

Telemecanique

Contents

Drive references 2
Mounting 4
Wiring 8

NOTE: Please also refer to the Programming Manual.

When the drive is powered up, the power components and some of the control components are connected to the line supply. It is extremely dangerous to touch them. *The drive cover must be kept closed.*

In general, the drive power supply must be disconnected before any operation on either the electrical or mechanical parts of the installation or *machine.*
After the ALTIVAR has been switched off and the display has disappeared completely, *wait for 10 minutes before working on the equipment*. This is the time required for the capacitors to discharge.
The motor can be stopped during operation by inhibiting start commands or the speed reference while the drive remains powered up. If personnel safety requires prevention of sudden restarts, this electronic locking system is not sufficient: *fit a cut-off on the power circuit.*.

The drive is fitted with safety devices which, in the event of a fault, can shut down the drive and consequently the motor. The motor itself may be stopped by a mechanical blockage. Finally, voltage variations, especially line supply failures, can also cause shutdowns.
If the cause of the shutdown disappears, there is a risk of restarting which may endanger certain machines or installations, especially those which must conform to safety regulations.

In this case the user must take precautions against the possibility of restarts, in particular by using a low speed detector to cut off power to the drive if the motor performs an unprogrammed shutdown.

The drive must be installed and set up in accordance with both international and national standards. Bringing the device into conformity is the responsibility of the systems integrator who must observe the EMC directive among others within the European Union.
The specifications contained in this document must be applied in order to comply with the essential requirements of the EMC directive.

The Altivar 31 must be considered as a component: it is neither a machine nor a device ready for use in accordance with European directives (machinery directive and electromagnetic compatibility directive). It is the responsibility of the end user to ensure that the machine meets these standards.

The drive must not be used as a safety device for machines posing a potential risk of material damage or personal injury (lifting equipment, for example). In such applications, overspeed checks and checks to ensure that the trajectory remains under constant control must be made by separate devices which are independent of the drive.

The products and equipment described in this document may be changed or modified at any time, either from a technical point of view or in the way they are operated. Their description can in no way be considered contractual.

Drive references

Single phase supply voltage: 200…240 V 50/60 Hz

3-phase motor 200…240 V

Motor	Line supply (input)					Drive (output)			Altivar 31
Power indicated on plate (1)	Max. line current (2)		Max. prospective line Isc	Apparent power	Max. inrush current (3)	Nominal current In (1)	Max. transient current (1) (4)	Power dissipated at nominal load	Reference (5)
	at 200 V	at 240 V							
kW/HP	A	A	kA	kVA	A	A	A	W	
0.18/0.25	3.0	2.5	1	0.6	10	1.5	2.3	24	**ATV31H018M2**
0.37/0.5	5.3	4.4	1	1.0	10	3.3	5.0	41	**ATV31H037M2**
0.55/0.75	6.8	5.8	1	1.4	10	3.7	5.6	46	**ATV31H055M2**
0.75/1	8.9	7.5	1	1.8	10	4.8/4.2 (6)	7.2	60	**ATV31H075M2**
1.1/1.5	12.1	10.2	1	2.4	19	6.9	10.4	74	**ATV31HU11M2**
1.5/2	15.8	13.3	1	3.2	19	8.0	12.0	90	**ATV31HU15M2**
2.2/3	21.9	18.4	1	4.4	19	11.0	16.5	123	**ATV31HU22M2**

3-phase supply voltage: 200…240 V 50/60 Hz

3-phase motor 200…240 V

Motor	Line supply (input)					Drive (output)			Altivar 31
Power indicated on plate (1)	Max. line current (2)		Max. prospective line Isc	Apparent power	Max. inrush current (3)	Nominal current In (1)	Max. transient current (1) (4)	Power dissipated at nominal load	Reference (5)
	at 200 V	at 240 V							
kW/HP	A	A	kA	kVA	A	A	A	W	
0.18/0.25	2.1	1.9	5	0.7	10	1.5	2.3	23	**ATV31H018M3X**
0.37/0.5	3.8	3.3	5	1.3	10	3.3	5.0	38	**ATV31H037M3X**
0.55/0.75	4.9	4.2	5	1.7	10	3.7	5.6	43	**ATV31H055M3X**
0.75/1	6.4	5.6	5	2.2	10	4.8	7.2	55	**ATV31H075M3X**
1.1/1.5	8.5	7.4	5	3.0	10	6.9	10.4	71	**ATV31HU11M3X**
1.5/2	11.1	9.6	5	3.8	10	8.0	12.0	86	**ATV31HU15M3X**
2.2/3	14.9	13.0	5	5.2	10	11.0	16.5	114	**ATV31HU22M3X**
3/3	19.1	16.6	5	6.6	19	13.7	20.6	146	**ATV31HU30M3X**
4/5	24.2	21.1	5	8.4	19	17.5	26.3	180	**ATV31HU40M3X**
5.5/7.5	36.8	32.0	22	12.8	23	27.5	41.3	292	**ATV31HU55M3X**
7.5/10	46.8	40.9	22	16.2	23	33.0	49.5	388	**ATV31HU75M3X**
11/15	63.5	55.6	22	22.0	93	54.0	81.0	477	**ATV31HD11M3X**
15/20	82.1	71.9	22	28.5	93	66.0	99.0	628	**ATV31HD15M3X**

(1) These power ratings and currents are for a maximum ambient temperature of 50°C and a switching frequency of 4 kHz in continuous operation.The switching frequency is adjustable from 2 to 16 kHz.
Above 4 kHz, the drive will reduce the switching frequency in the event of excessive temperature rise. The temperature rise is controlled by a PTC probe in the power module. Nonetheless, the nominal drive current should be derated if operation above 4 kHz needs to be continuous.
Derating curves are shown on page 6 as a function of switching frequency, ambient temperature and mounting conditions.

(2) Current on a line supply with the "Max. prospective line Isc" indicated.

(3) Peak current on power-up, for the max. voltage (240 V + 10%).

(4) For 60 seconds.

(5) Reference for a drive with built-in terminal but no control unit. For a drive with control potentiometer and RUN/STOP buttons, add an A at the end of the reference, e.g.: ATV31H018M2A.

(6) 4.8 A at 200 V/4.6 A at 208 V/4.2 A at 230 V and 240 V.

Drive references

3-phase supply voltage: 380…500 V 50/60 Hz

3-phase motor 380…500 V

Motor	Line supply (input)					Drive (output)			Altivar 31
Power indicated on plate (1)	Max. line current (2)		Max. prospective line Isc	Apparent power	Max. inrush current (3)	Nominal current In (1)	Max. transient current (1) (4)	Power dissipated at nominal load	Reference (5)
	at 380 V	at 500 V							
kW/HP	A	A	kA	kVA	A	A	A	W	
0.37/0.5	2.2	1.7	5	1.5	10	1.5	2.3	32	**ATV31H037N4**
0.55/0.75	2.8	2.2	5	1.8	10	1.9	2.9	37	**ATV31H055N4**
0.75/1	3.6	2.7	5	2.4	10	2.3	3.5	41	**ATV31H075N4**
1.1/1.5	4.9	3.7	5	3.2	10	3.0	4.5	48	**ATV31HU11N4**
1.5/2	6.4	4.8	5	4.2	10	4.1	6.2	61	**ATV31HU15N4**
2.2/3	8.9	6.7	5	5.9	10	5.5	8.3	79	**ATV31HU22N4**
3/3	10.9	8.3	5	7.1	10	7.1	10.7	125	**ATV31HU30N4**
4/5	13.9	10.6	5	9.2	10	9.5	14.3	150	**ATV31HU40N4**
5.5/7.5	21.9	16.5	22	15.0	30	14.3	21.5	232	**ATV31HU55N4**
7.5/10	27.7	21.0	22	18.0	30	17.0	25.5	269	**ATV31HU75N4**
11/15	37.2	28.4	22	25.0	97	27.7	41.6	397	**ATV31HD11N4**
15/20	48.2	36.8	22	32.0	97	33.0	49.5	492	**ATV31HD15N4**

3-phase supply voltage: 525…600 V 50/60 Hz

3-phase motor 525…600 V

Motor	Line supply (input)					Drive (output)			Altivar 31
Power indicated on plate (1)	Max. line current (2)		Max. prospective line Isc	Apparent power	Max. inrush current (3)	Nominal current In (1)	Max. transient current (1) (4)	Power dissipated at nominal load	Reference
	at 525 V	at 600 V							
kW/HP	A	A	kA	kVA	A	A	A	W	
0.75/1	2.8	2.4	5	2.5	12	1.7	2.6	36	**ATV31H075S6X**
1.5/2	4.8	4.2	5	4.4	12	2.7	4.1	48	**ATV31HU15S6X**
2.2/3	6.4	5.6	5	5.8	12	3.9	5.9	62	**ATV31HU22S6X**
4/5	10.7	9.3	5	9.7	12	6.1	9.2	94	**ATV31HU40S6X**
5.5/7.5	16.2	14.1	22	15.0	36	9.0	13.5	133	**ATV31HU55S6X**
7.5/10	21.3	18.5	22	19.0	36	11.0	16.5	165	**ATV31HU75S6X**
11/15	27.8	24.4	22	25.0	117	17.0	25.5	257	**ATV31HD11S6X**
15/20	36.4	31.8	22	33.0	117	22.0	33.0	335	**ATV31HD15S6X**

(1) These power ratings and currents are for a maximum ambient temperature of 50°C and a switching frequency of 4 kHz in continuous operation. The switching frequency is adjustable from 2 to 16 kHz.
Above 4 kHz, the drive will reduce the switching frequency in the event of excessive temperature rise. The temperature rise is controlled by a PTC probe in the power module. Nonetheless, the nominal drive current should be derated if operation above 4 kHz needs to be continuous.
Derating curves are shown on page 6 as a function of switching frequency, ambient temperature and mounting conditions.

(2) Current on a line supply with the "Max. prospective line Isc" indicated.

(3) Peak current on power-up, for the max. voltage (500 V + 10%, 600 V + 10%).

(4) For 60 seconds.

(5) Reference for a drive with built-in terminal but no control unit. For a drive with control potentiometer and RUN/STOP buttons, add an A at the end of the reference, e.g.: ATV31H037N4A.

Mounting

Dimensions and weights

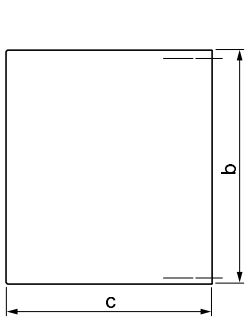

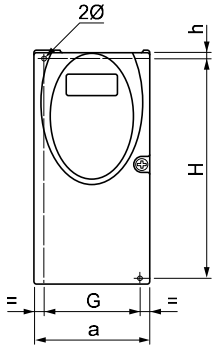

ATV31		a mm	b mm	c (1) mm	G mm	hr mm	H mm	Ø mm	For screw	Weight kg
H018M3X, H037M3X	Size 1	72	145	120	60±1	5	121.5±1	2 x 5	M4	0.9
H055M3X, H075M3X	Size 2	72	145	130	60±1	5	121.5±1	2 x 5	M4	0.9
H018M2, H037M2	Size 3	72	145	130	60±1	5	121.5±1	2 x 5	M4	1.05
H055M2, H075M2	Size 4	72	145	140	60±1	5	121.5±1	2 x 5	M4	1.05
HU11M3X, HU15M3X	Size 5	105	143	130	93±1	5	121.5±1	2 x 5	M4	1.25
HU11M2, HU15M2, HU22M3X, H037N4, H055N4, H075N4, HU11N4,HU15N4, H075S6X, HU15S6X	Size 6	105	143	150	93±1	5	121.5±1	2 x 5	M4	1.35

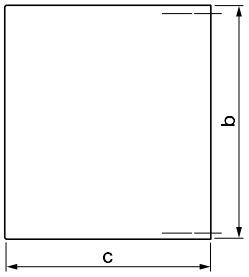

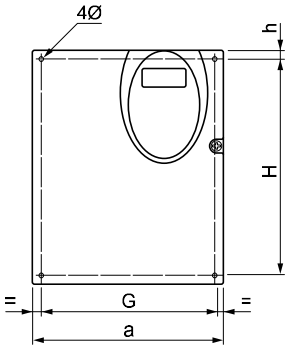

ATV31		a mm	b mm	c (1) mm	G mm	hr mm	H mm	Ø mm	For screw	Weight kg
HU22M2, HU30M3X, HU40M3X, HU22N4, HU30N4, HU40N4, HU22S6X, HU40S6X	Size 7	140	184	150	126±1	6.5	157±1	4 x 5	M4	2.35
HU55M3X, HU75M3X, HU55N4, HU75N4, HU55S6X, HU75S6X	Size 8	180	232	170	160±1	5	210±1	4 x 5	M4	4.70
HD11M3X, HD15M3X, HD11N4, HD15N4, HD11S6X, HD15S6X	Size 9	245	330	190	225±1	7	295±1	4 x 6	M5	9.0

(1) For drives in the A range, add 8 mm for the protruding potentiometer button.

Mounting

Mounting and temperature conditions

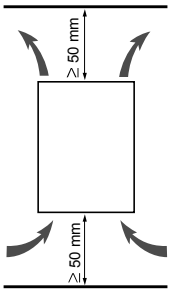

Install the unit vertically, at ± 10°.
Do not place it close to heating elements.
Leave sufficient free space to ensure that the air required for cooling purposes can circulate from the bottom to the top of the unit.

Free space in front of unit: 10 mm minimum.

When IP20 protection is adequate, we recommend that the protective cover on the top of the drive be removed, as shown below.

Removing the protective cover

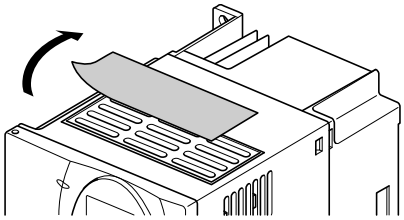

Example ATV31HU11M3X

3 types of mounting are possible:

Type A mounting: Free space ⩾ 50 mm on each side, with protective cover fitted

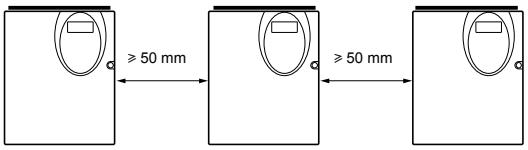

Type B mounting: Drives mounted side-by-side, protective cover removed (the degree of protection becomes IP20)

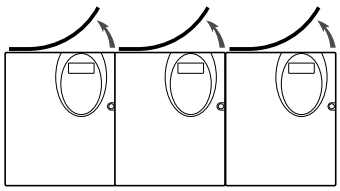

Type C mounting: Free space ⩾ 50 mm on each side, protective cover removed (the degree of protection becomes IP20)

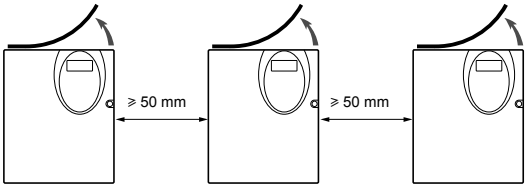

Mounting

Derating curves for the drive current In as a function of the temperature, switching frequency and type of mounting.

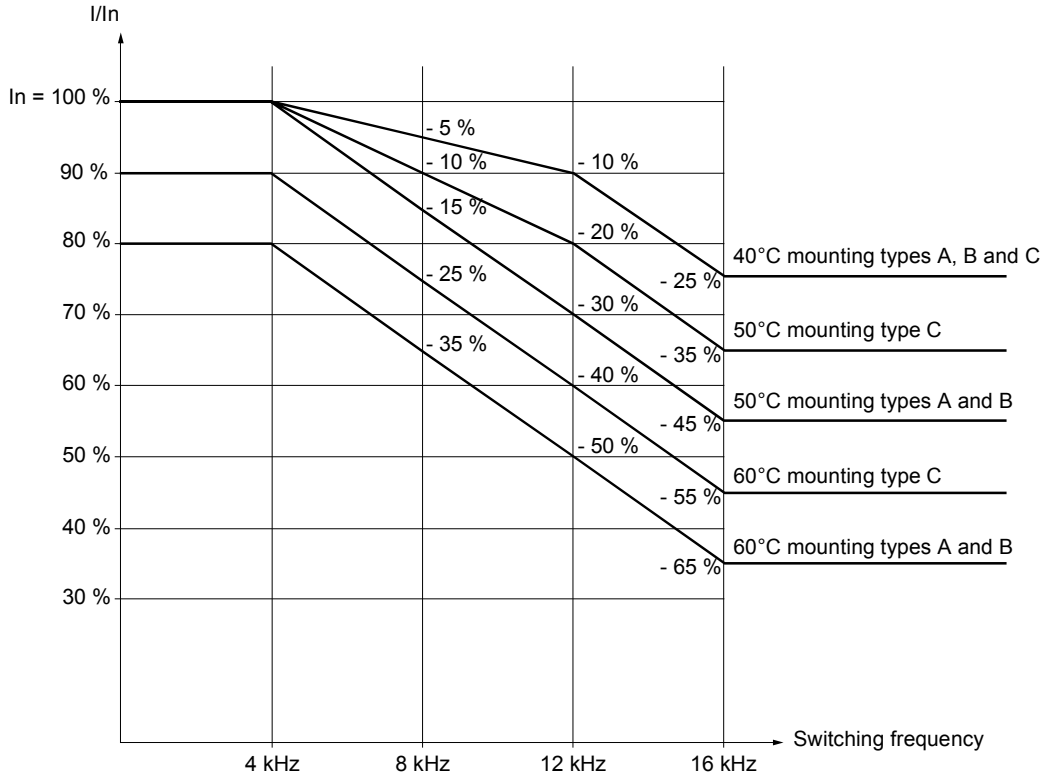

For intermediate temperatures (e.g. 55°C), interpolate between 2 curves.

If you are installing the drives in enclosures, make provision for a flow of air at least equal to the value given in the table below for each drive.

ATV31	Flow rate in m^3/hour
H018M2, H037M2, H055M2, H018M3X, H037M3X, H055M3X, H037N4, H055N4, H075N4, HU11N4 H075S6X, HU15S6X	18
H075M2, HU11M2, HU15M2 H075M3X, HU11M3X, HU15M3X HU15N4, HU22N4 HU22S6X, HU40S6X	33
HU22M2, HU22M3X, HU30M3X, HU40M3X HU30N4, HU40N4 HU55S6X, HU75S6X	93
HU55M3X HU55N4, HU75N4 HD11S6X	102
HU75M3X, HD11M3X, HD11N4, HD15N4 HD15S6X	168
HD15M3X	216

Electromagnetic compatibility

EMC mounting plate: Supplied with the drive

Fix the EMC equipotentiality mounting plate to the holes in the ATV 31 heatsink using the 2 screws supplied, as shown in the drawings below.

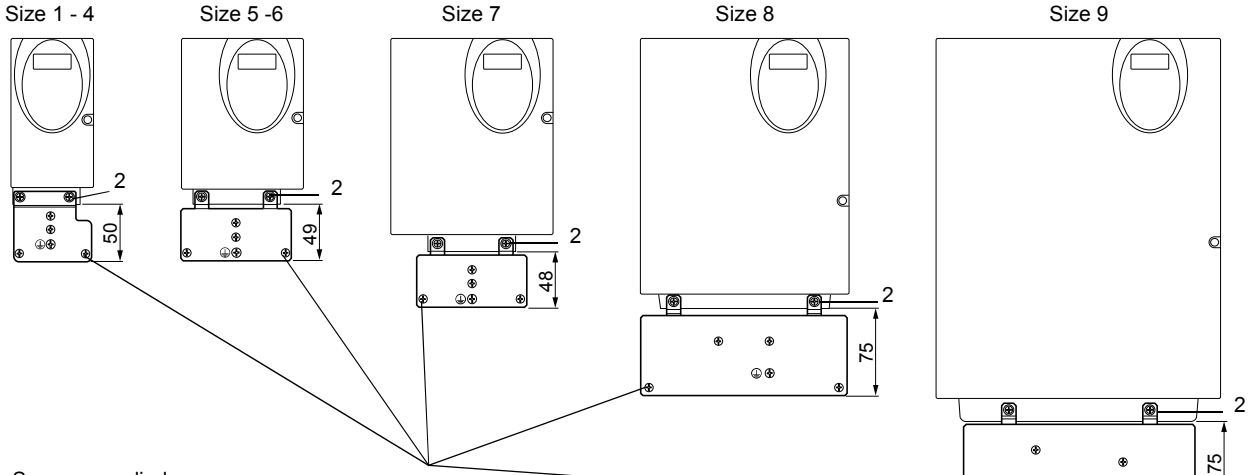

Screws supplied:
4 x M4 screws for fixing the EMC clamps (clamps not supplied)
1 x M5 screw for ground

ATV31	
H018M3X, H037M3X	Size 1
H055M3X, H075M3X	Size 2
H018M2, H037M2	Size 3
H055M2, H075M2	Size 4
HU11M3X, HU15M3X	Size 5
HU11M2, HU15M2, HU22M3X, H037N4, H055N4, H075N4, HU11N4, HU15N4, H075S6X, HU15S6X	Size 6

ATV31	
HU22M2, HU30M3X, HU40M3X, HU22N4, HU30N4, HU40N4, HU22S6X, HU40S6X	Size 7
HU55M3X, HU75M3X, HU55N4, HU75N4, HU55S6X, HU75S6X	Size 8
HD11M3X, HD15M3X, HD11N4, HD15N4, HD11S6X, HD15S6X	Size 9

Access to terminals

To access the terminals, open the cover as shown in the example below.

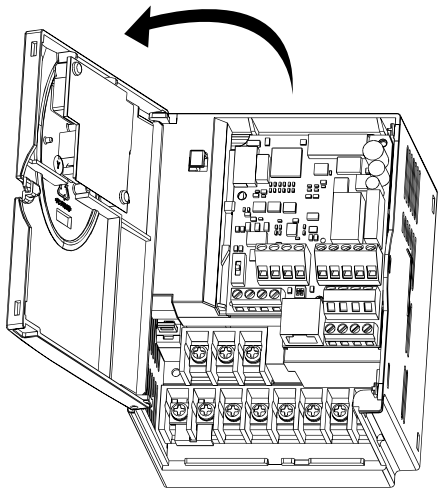

Example ATV31HU11M2

Power terminals

Connect the power terminals before connecting the control terminals.

Power terminal characteristics

Altivar ATV 31	Maximum connection capacity		Tightening torque in Nm
	AWG	mm^2	
H018M2, H037M2, H055M2, H075M2, H018M3X, H037M3X, H055M3X, H075M3X, HU11M3X, HU15M3X	AWG 14	2.5	0.8
HU11M2, HU15M2, HU22M2, HU22M3X, HU30M3X, HU40M3X, H037N4, H055N4, H075N4, HU11N4,HU15N4, HU22N4, HU30N4, HU40N4 H075S6X, HU15S6X, HU22S6X, HU40S6X	AWG 10	6	1.2
HU55M3X, HU75M3X, HU55N4, HU75N4, HU55S6X, HU75S6X	AWG 6	16	2.2
HD11M3X, HD15M3X, HD11N4, HD15N4, HD11S6X, HD15S6X	AWG 3	25	4

Power terminal functions

Terminal	Function	For Altivar ATV 31
⏚	Ground terminal	All ratings
R/L1 S/L2	Power supply	ATV31●●●●M2
R/L1 S/L2 T/L3		ATV31●●●●M3X ATV31●●●●N4 ATV31●●●●S6X
PO	DC bus + polarity	All ratings
PA/+	Output to braking resistor (+ polarity)	All ratings
PB	Output to braking resistor	All ratings
PC/-	DC bus - polarity	All ratings
U/T1 V/T2 W/T3	Outputs to the motor	All ratings

Never remove the commoning link between PO and PA/+.

Arrangement of the power terminals

ATV 31H018M3X, H037M3X, H055M3X, H075M3X

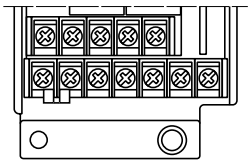

⏚	⏚	R/L1	S/L2	T/L3		
P0	PA/+	PB	PC/-	U/T1	V/T2	W/T3

ATV 31H018M2, H037M2, H055M2, H075M2

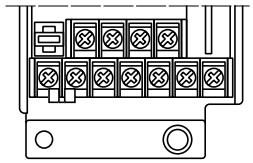

⏚	⏚	R/L1	S/L2				
P0	PA/+	PB	PC/-	U/T1	V/T2	W/T3	

ATV 31HU11M3X, HU15M3X, HU22M3X, HU30M3X, HU40M3X, H037N4, H055N4, H075N4, HU11N4, HU15N4, HU22N4, HU30N4, HU40N4, H075S6X, HU15S6X, HU22S6X, HU40S6X

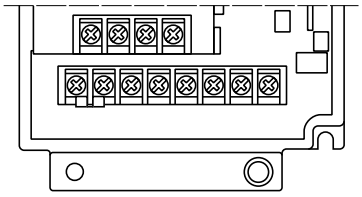

⏚	R/L1	S/L2	T/L3					
P0	PA/+	PB	PC/-	U/T1	V/T2	W/T3	⏚	

ATV 31HU11M2, HU15M2, HU22M2

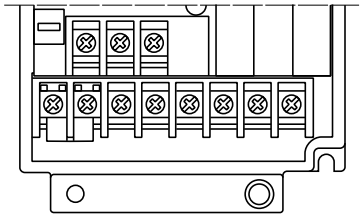

⏚	R/L1	S/L2						
P0	PA/+	PB	PC/-	U/T1	V/T2	W/T3	⏚	

ATV 31HU55M3X, HU75M3X, HU55N4, HU75N4, HU55S6X, HU75S6X

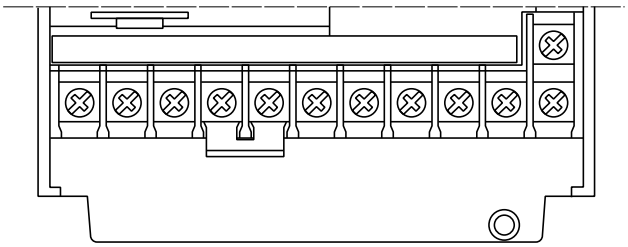

											⏚
R/L1	S/L2	T/L3	P0	PA/+	PB	PC/-	U/T1	V/T2	W/T3	⏚	

ATV 31HD11M3X, HD15M3X, HD11N4, HD15N4, HD11S6X, HD15S6X

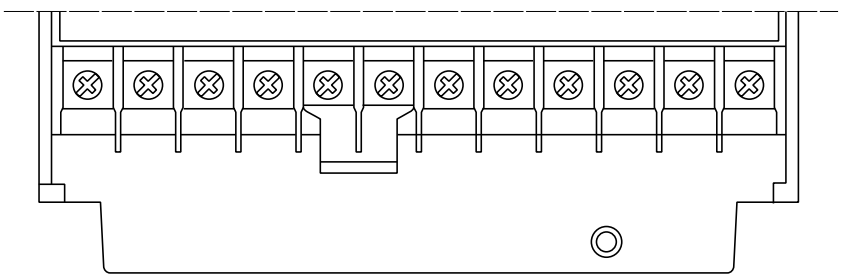

⏚	R/L1	S/L2	T/L3	P0	PA/+	PB	PC/-	U/T1	V/T2	W/T3	⏚

Control terminals

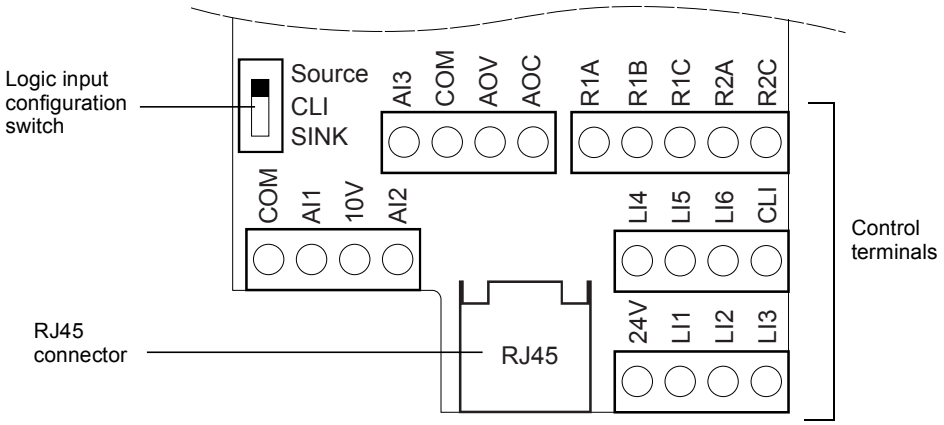

- Maximum connection capacity: 2.5 mm^2 - AWG 14
- Max. tightening torque: 0.6 Nm

Control terminals

Arrangement, characteristics and functions of the control terminals

Terminal	Function	Electrical characteristics
R1A R1B R1C	Common point C/O contact (R1C) of programmable relay R1	• Min. switching capacity: 10 mA for 5 V ⎓ • Max. switching capacity on resistive load (cos φ = 1 and L/R = 0 ms): 5 A for 250 V ∿ and 30 V ⎓
R2A R2C	N/O contact of programmable relay R2	• Max. switching capacity on inductive load (cos φ = 0.4 and L/R = 7 ms): 1.5 A for 250 V ∿ and 30 V ⎓ • Sampling time 8 ms • Service life: 100,000 operations at max. switching power 1,000,000 operations at min. switching power

COM	Analog I/O common	0 V
AI1	Analog voltage input	Analog input 0 + 10 V (max. safe voltage 30 V) • Impedance 30 kΩ • Resolution 0.01 V, 10-bit converter • Precision ± 4.3%, linearity ± 0.2%, of max. value • Sampling time 8 ms • Operation with shielded cable 100 m max.
10 V	Power supply for setpoint potentiometer 1 to 10 kΩ	+10 V (+ 8% - 0), 10 mA max, protected against short-circuits and overloads
AI2	Analog voltage input	Bipolar analog input 0 ± 10 V (max. safe voltage ± 30 V) **The + or - polarity of the voltage on AI2 affects the direction of the setpoint and therefore the direction of operation.** • Impedance 30 kΩ • Resolution 0.01 V, 10-bit + sign converter • Precision ± 4.3%, linearity ± 0.2%, of max. value • Sampling time 8 ms • Operation with shielded cable 100 m max.

AI3	Analog current input	Analog input X - Y mA. X and Y can be programmed from 0 to 20 mA • Impedance 250 Ω • Resolution 0.02 mA, 10-bit converter • Precision ± 4.3%, linearity ± 0.2%, of max. value • Sampling time 8 ms
COM	Analog I/O common	0 V
AOV AOC	Analog voltage output AOV or Analog current output AOC or Logic voltage output AOC AOV or AOC can be assigned (either, but not both)	Analog output 0 to 10 V, min. load impedance 470 Ω or Analog output X - Y mA. X and Y can be programmed from 0 to 20 mA, max. load impedance 800 Ω • Resolution 8 bits (1) • Precision ± 1% (1) • Linearity ± 0.2% (1) • Sampling time 8 ms This analog output can be configured as a 24 V logic output on AOC, min. load impedance 1.2 kΩ. (1) Characteristics of digital/analog converter.

24 V	Logic input power supply	+ 24 V protected against short-circuits and overloads, min. 19 V, max. 30 V Max. customer current available 100 mA
LI1 LI2 LI3	Logic inputs	Programmable logic inputs • + 24 V power supply (max. 30 V) • Impedance 3.5 kΩ • State 0 if < 5 V, state 1 if > 11 V (voltage difference between LI- and CLI) • Sampling time 4 ms

LI4 LI5 LI6	Logic inputs	Programmable logic inputs • + 24 V power supply (max. 30 V) • Impedance 3.5 kΩ • State 0 if < 5 V, state 1 if > 11 V (voltage difference between LI- and CLI) • Sampling time 4 ms
CLI	Logic input common	See page 12.

Wiring diagram for factory settings

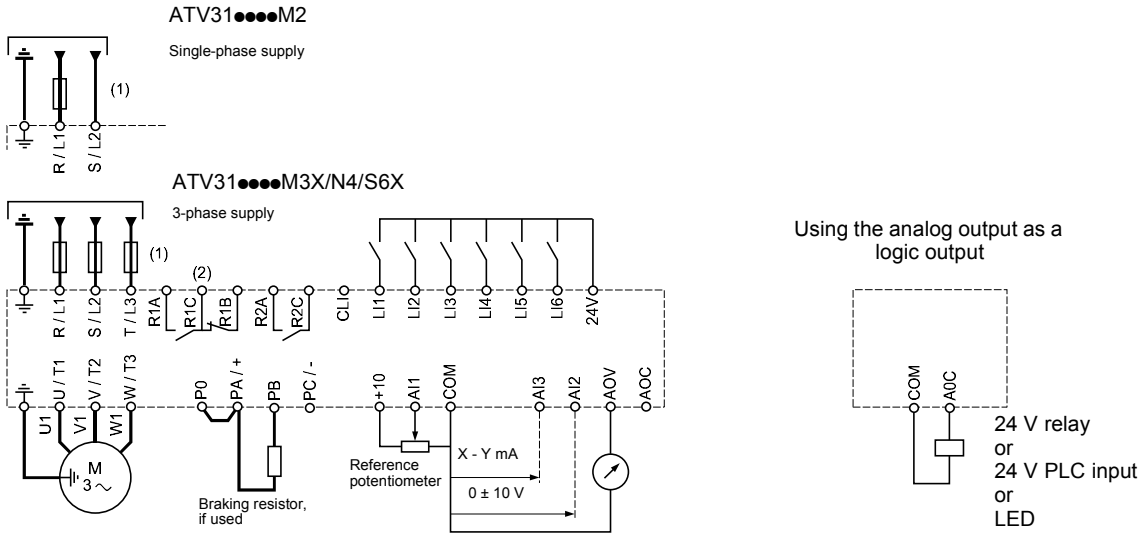

(1) Line choke, if used (single phase or 3-phase)
(2) Fault relay contacts, for remote indication of the drive status.

Note: Fit interference suppressors to all inductive circuits near the drive or coupled to the same circuit (relays, contactors, solenoid valves, etc).

Choice of associated components:
Please refer to the catalogue.

Logic input switch

This switch assigns the logic input common link to 0V, 24 V or "floating":

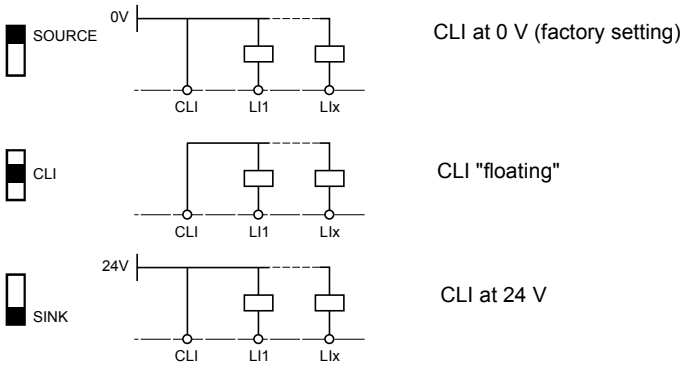

Examples of recommended circuit diagrams

Using volt-free contacts

- Switch in "Source" position
  (ATV31 factory setting for types other than ATV31●●●●A)

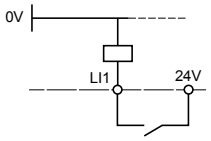

- Switch in "SINK" position
  (factory setting for ATV31●●●●A)

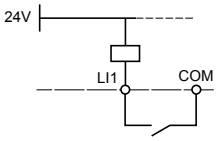

Using PLC transistor outputs

- Switch in CLI position

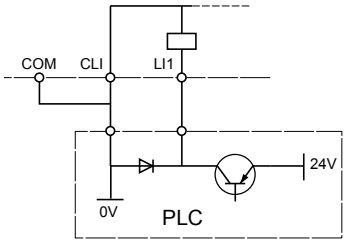

- Switch in CLI position

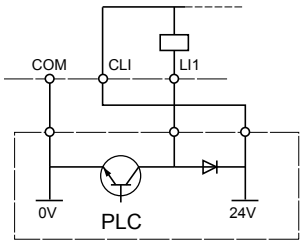

Wiring recommendations

Power

The drive must be earthed to conform with the regulations concerning high leakage currents (over 3.5 mA).
When upstream protection by means of a "residual current device" is required by the installation standards, a type A device should be used for single-phase drives and type B for 3-phase drives. Choose a suitable model incorporating:

- HF current filtering
- A time delay which prevents tripping caused by the load from stray capacitance on power-up. The time delay is not possible for 30 mA devices. In this case, choose devices with immunity against accidental tripping, for example RCDs with reinforced immunity from the **s.i** range (Merlin Gerin brand).

If the installation includes several drives, provide one "residual current device" per drive.

Keep the power cables separate from circuits in the installation with low-level signals (detectors, PLCs, measuring apparatus, video, telephone).

If you are using cables > 50 m between the drive and the motor, add output filters (please refer to the catalogue).

Control

Keep the control circuits away from the power cables. For control and speed reference circuits, we recommend using shielded twisted cables with a pitch of between 25 and 50 mm, connecting the shielding to ground at each end.

Operation on an IT system

IT system: Isolated or impedance earthed neutral.
Use a permanent insulation monitor compatible with non-linear loads (a Merlin Gerin type XM200, for example).

ATV 31●●●M2 and N4 drives feature built-in RFI filters. These filters can be isolated from ground for operation on an IT system as follows:

ATV31H018M2 to U22M2 and ATV31H037N4 to U40N4:

Pull out the jumper on the left of the ground terminal as illustrated below.

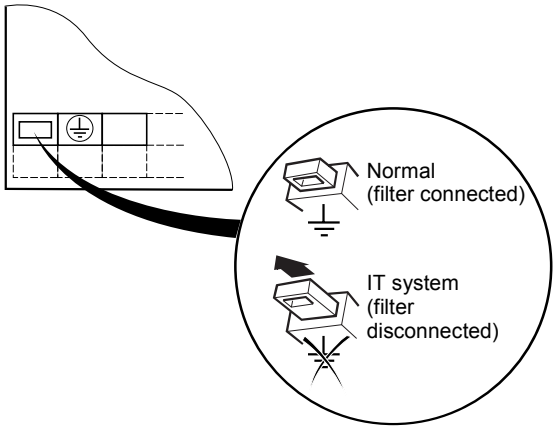

ATV31HU55N4 to D15N4:

Move the cable tag on the top left of the power terminals as illustrated below (example ATV31HU55N4):

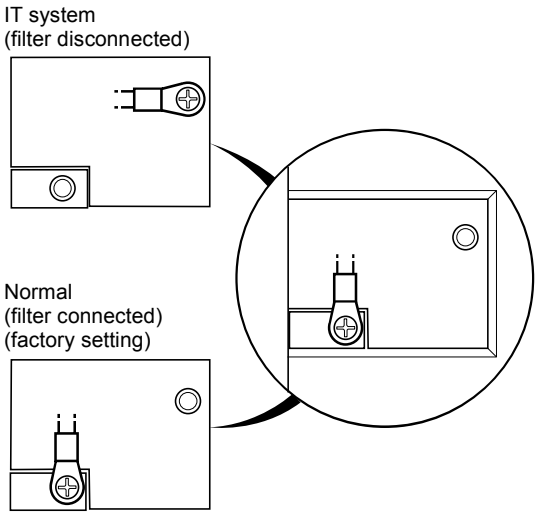

Electromagnetic compatibility

Principle

- Grounds between the drive, motor and cable shielding must have "high frequency" equipotentiality.
- Use shielded cables with shielding connected to ground throughout 360° at both ends for the motor cable **6**, braking resistor (if used) **8**, and control-signalling cables **7**. Metal ducting or conduit can be used for part of the shielding length provided that there is no break in continuity.
- Ensure maximum separation between the power supply cable (line supply) and the motor cable.

Installation diagram (examples)

Sizes 1 to 7

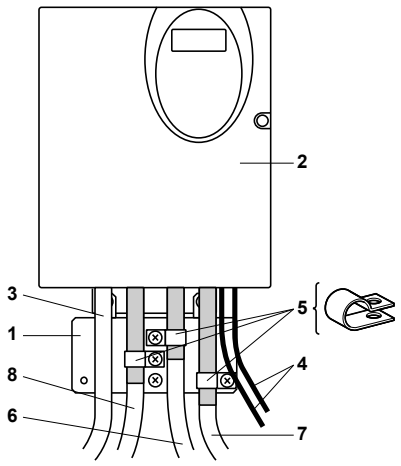

Size 8

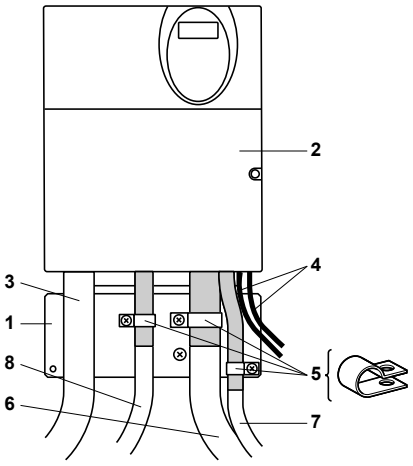

Size 9

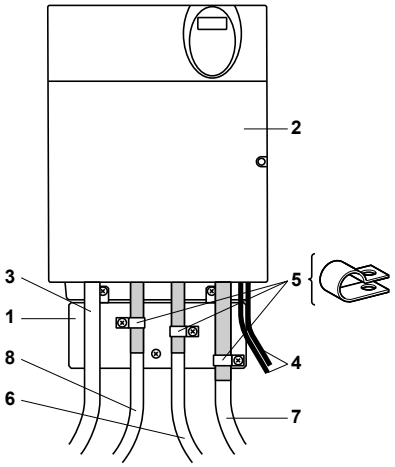

	Size 1	Size 2	Size 3	Size 4	Size 5	Size 6	Size 7	Size 8	Size 9
ATV31	H018M3X, H037M3X	H055M3X, H075M3X	H018M2, H037M2	H055M2, H075M2	HU11M3X, HU15M3X	HU11M2, HU15M2 HU22M3X H037N4, H055N4, H075N4, HU11N4, HU15N4 H075S6X, HU15S6X	HU22M2 HU30M3X, HU40M3X HU22N4, HU30N4, HU40N4 HU22S6X, HU40S6X	HU55M3X, HU75M3X HU55N4, HU75N4 HU55S6X, HU75S6X	HD11M3X, HD15M3X HD11N4, HD15N4 HD11S6X, HD15S6X

1 Sheet steel grounded plate supplied with the drive, to be fitted as indicated on the diagram.

2 Altivar 31

3 Non-shielded power supply wires or cable

4 Non-shielded wires for relay contacts

5 Fix and ground the shielding of cables **6**, **7** and **8** as close as possible to the drive:
- Strip the shielding.
- Use stainless steel cable clamps of an appropriate size on the parts from which the shielding has been stripped, to attach them to the plate **1**.
The shielding must be clamped tightly enough to the metal plate to ensure correct contact.

6 Shielded cable for motor connection with shielding connected to ground at both ends.
The shielding must be continuous and intermediate terminals must be in EMC shielded metal boxes.
For 0.18 to 1.5 kW drives, if the switching frequency is higher than 12 kHz, use cables with low linear capacitance: max. 130 pF (picoFarads) per metre.

7 Shielded cable for connecting the control/signalling wiring.
For applications requiring several conductors, use cables with a small cross-section (0.5 mm^2).
The shielding must be connected to ground at both ends. The shielding must be continuous and intermediate terminals must be in EMC shielded metal boxes.

8 Shielded cable for connecting braking resistor (if fitted).
The shielding must be continuous and intermediate terminals must be in EMC shielded metal boxes.

Note:
- If using an additional input filter, it should be mounted under the drive and connected directly to the line supply via an unshielded cable. Link 3 on the drive is then via the filter output cable.
- The HF equipotential ground connection between the drive, motor and cable shielding does not remove the need to connect the PE protective conductors (green-yellow) to the appropriate terminals on each unit.

Product data sheet
Characteristics

EE30T3H
Transformer Dry Type 30kVA 480D208Y120

Product availability : Stock - Normally stocked in distribution facility

Price* : 5181.00 USD

Main

Product or component type	Energy Efficient Transformer
Box number	17D
NEMA degree of protection	NEMA 2
Insulation temperature	428 °F (220 °C)
Phase	3 phases
Primary voltage	480 V delta
Rated power in VA	30 kVA
Secondary voltage	208Y/120 V
Number of tap-offs	6 2.5 % 2+ 4-
Temperature rise	150 °C
Material	Aluminium

Ordering and shipping details

Discount Schedule	PE2E
GTIN	00785901595977
Nbr. of units in pkg.	1
Returnability	Y
Country of origin	MX

Offer Sustainability

Sustainable offer status	Green Premium product
RoHS (date code: YYWW)	Compliant - since 1347 - Schneider Electric declaration of conformity Schneider Electric declaration of conformity
REACh	Reference not containing SVHC above the threshold Reference not containing SVHC above the threshold
Product environmental profile	Available

Disclaimer: This documentation is not intended as a substitute for and is not to be used for determining suitability or reliability of these products for specific user applications

Product end of life instructions	Need no specific recycling operations

Contractual warranty

Warranty period	18 months

Dry-Type Transformers

Transformadores tipo seco

Transformateurs de type sec

1000 Volts and Below /
1 000 V y tensiones inferiores /
1000 V et moins

Instruction Bulletin / Boletín de instrucciones / Directives d'utilisation

43006-850-01
07/2018

Retain for future use. / Conservar para uso futuro. / À conserver pour usage ultérieur.

SQUARE D™

by Schneider Electric

Dry-Type Transformers
1000 Volts and Below
Class 7400

ENGLISH

Instruction Bulletin

43006-850-01
Rev. 03, 07/2018

Retain for future use.

SQUARE D™

by Schneider Electric

Hazard Categories and Special Symbols

Read these instructions carefully and look at the equipment to become familiar with the device before trying to install, operate, service, or maintain it. The following special messages may appear throughout this bulletin or on the equipment to warn of hazards or to call attention to information that clarifies or simplifies a procedure.

The addition of either symbol to a “Danger” or “Warning” safety label indicates that an electrical hazard exists which will result in personal injury if the instructions are not followed.

This is the safety alert symbol. It is used to alert you to personal injury hazards. Obey all safety messages that follow this symbol to avoid possible injury or death.

⚠ DANGER

DANGER indicates an imminently hazardous situation which, if not avoided, **will result in** death or serious injury.

⚠ WARNING

WARNING indicates a potentially hazardous situation which, if not avoided, **can result in** death or serious injury.

⚠ CAUTION

CAUTION indicates a potentially hazardous situation which, if not avoided, **can result in** minor or moderate injury.

NOTICE

NOTICE is used to address practices not related to physical injury. The safety alert symbol is not used with this signal word.

NOTE: Provides additional information to clarify or simplify a procedure.

Please Note

Electrical equipment should be installed, operated, serviced, and maintained only by qualified personnel. No responsibility is assumed by Schneider Electric for any consequences arising out of the use of this material.

ENGLISH

Table of Contents

SECTION 1: INTRODUCTION 7

SECTION 2: SAFETY PRECAUTIONS 9

Codes and Standards 9
Disclaimer Statement 9

SECTION 3: RECEIVING, HANDLING AND STORING 11

Receiving 11
Handling 11
Handling with Platform Dollies or Lifts, Pallet Jacks or Fork Trucks 11
Handling with Cranes: Using Cables, Chains or Straps 12
Handling Enclosure Styles D, H and K after Removal of the Shipping Pallet 15
Storing 16

SECTION 4: INSTALLATION 17

Locating/Placing Ventilated and Non-ventilated Transformers 17
All Enclosure Styles (D, E, F, H, K and J) 20
Grounding 24
Seismic Qualifications 25
Sound/Vibration Control 25
Enclosure Style K 26
Enclosure Styles D, E, H and J 26
Making Electrical Connections 27
Pre-commissioning/Pre-energizing Checks and Testing 31
Cleaning 31
Visual and Mechanical Checks 31
Electrical Testing 32

SECTION 5: OPERATION 33

Effects of Humidity 33
Enclosure Temperature 34
Prior to Energizing the Transformers 34
Energizing the Transformer 34

SECTION 6: MAINTENANCE 37

Performing Visual and Mechanical Checks 37
Frequency 37
Severe, Environmental or Special Events 38
Cleaning 38
Connections and Contact Surfaces 38
Enclosures, Windings and Insulators 38
Performing Electrical Testing 38
Contact Resistance 39
Insulation Resistance 39
Winding Resistance 39
Grounding and Bonding 39
Turns Ratio 39
Sound Isolation Pads 40
Coil Cooling Ducts 40
Terminals 40

SECTION 7: REPLACEMENT PARTS AND ACCESSORIES 41

© 1992–2018 Schneider Electric All Rights Reserved

ENGLISH

List of Figures

Figure 1: Energy Efficient 2016 Transformers (EX) 7
Figure 2: Energy Efficient 2016 Transformers (EX) 7
Figure 3: Open Core and Coil 8
Figure 4: Energy Efficient (EE) Ventilated Transformer 8
Figure 5: Non-Linear (NL, NP, NLP) and Harmonic Mitigating (HM) 8
Figure 6: Non-ventilated Transformer 8
Figure 7: Handling with a Fork Truck: Blades/Forks Placed under the Entire Transformer (Shipping Pallet Attached) 11
Figure 8: Two-Point Lift: Cable Pull Angles (Not Less than 60 Degrees from Horizontal) 12
Figure 9: Two-Point Lift: Handling with Chains, Hooks and Cross Corners (Not Less than 60 Degrees from Horizontal) 13
Figure 10: Four-Point Lift: Handling with Chains, Hooks and Four Corners (Not Less than 60 Degrees from Horizontal) 14
Figure 11: Four-Point Lift: Handling with a Strap and Hooks (Not Less than 60 Degrees from Horizontal) 15
Figure 12: Handling with a Pallet Jack: Enclosure Styles D, E, H and K after Removing the Shipping Pallet 15
Figure 13: Sample Nameplate 17
Figure 14: Minimum Distance Marked on Nameplate NEC 450.9 18
Figure 15: Mounting: Enclosure Styles D, H, K, and E 18
Figure 16: Enclosure D, H, K, and E 18
Figure 17: Mounting Enclosure Style J: Ventilated 19
Figure 18: Floor Mounting Bracket: Enclosure Style K 19
Figure 19: Floor Mounting Bracket: Enclosure Style K 19
Figure 20: Transformers Installed Indoors: NEC 450.21 Exceptions A or B from Sample Nameplate 20
Figure 21: Wall mounted transformer 21
Figure 22: Trapeze (Ceiling) mounted transformer 22
Figure 23: Type 3R Enclosure Kits 23
Figure 24: Four-conductor Ground Terminal Bar 24
Figure 25: Loosening the Nut One Full Turn (Four Places) Label 25
Figure 26: Floating the Transformer on the Isolation Pads/Sound Damper 25
Figure 27: Enclosure Style K: Bolts Accessible from the Front of the Transformer 26
Figure 28: Access Point: Enclosure Styles D, E, H and K 27
Figure 29: Access Point: Enclosure Style J 28
Figure 30: Label to Show Top Location on Enclosures (Access Points Below the Top Terminal Board) 28
Figure 31: Phase Diagram, Tap Locations and Voltage Rating Marked on Nameplate 29
Figure 32: Caution Label for Delta Wye or Wye Delta Connected Transformers 30
Figure 33: Removing Temporary Braces 34
Figure 34: Exploded Assembly for EX75T3H Energy Efficient Transformer with Enclosure Style 20K Front 41
Figure 35: Exploded Assembly for EX300T3H Energy Efficient Transformer with Enclosure Style 25J Front 42
Figure 36: Sample Nameplates 44

© 1992–2018 Schneider Electric All Rights Reserved

List of Tables

Table 1: Enclosure Clearances 20
Table 2: Converting from Floor to Wall Mounting (using factory kits) 21
Table 3: Converting from Floor to Trapeze (Ceiling) Mounting (using factory kits) 22
Table 4: Covers, Side Panels, Weather Shields and Mounting Brackets 43
Table 5: VERSAtile™ Compression Lugs and Mechanical Set-Screw Types—UL Listed Lugs AL9CU 44
Table 6: Square D Lug Kits for Dry-type Transformers 45
Table 7: Terminal Sizes, Mechanical and Compression Lugs and Wire Ranges 46
Table 8: Square D Ground Bar Kits 46

© 1992–2018 Schneider Electric All Rights Reserved

ENGLISH

© 1992–2018 Schneider Electric All Rights Reserved

ENGLISH

Section 1—Introduction

This instruction bulletin provides installation, operation and maintenance instructions for dry-type transformers 1000 volts and below for use in commercial and industrial applications.

NOTE: This bulletin should be used only by qualified personnel.

The following dry-type transformer product families are included in this instruction bulletin. Typical transformers are shown in Figures 1–6.

- Low Voltage Distribution Transformers, Three-phase and Single-phase
  - — General Purpose—50 and 60 Hz
  - — Energy Efficient (EE)—60 Hz
  - — Energy Efficient 2016 (EX)—60 Hz
  - — Non-linear Offering (NL, NP or NLP)—50 and 60 Hz
  - — Harmonic Mitigating Transformers (HM)—50 and 60 Hz
  - — Open Core and Coil (OC)
- Drive Isolation Transformers (DIT)
- Non-ventilated Transformers (NV)

Figure 1: Energy Efficient 2016 Transformers (EX)

Figure 2: Energy Efficient 2016 Transformers (EX)

© 1992–2018 Schneider Electric All Rights Reserved

ENGLISH

Figure 3: Open Core and Coil

Figure 4: Energy Efficient (EE) Ventilated Transformer

Figure 5: Non-Linear (NL, NP, NLP) and Harmonic Mitigating (HM)

Figure 6: Non-ventilated Transformer

© 1992–2018 Schneider Electric All Rights Reserved

ENGLISH

Section 2—Safety Precautions

⚠ DANGER

HAZARD OF ELECTRIC SHOCK, EXPLOSION, OR ARC FLASH

- Apply appropriate personal protective equipment (PPE) and follow safe electrical work practices. See NFPA 70E, NOM-029-STPS-2011, or CSA Z462.
- This equipment must be installed and serviced only by qualified electrical personnel.
- Perform such work only after reading and understanding all of the instructions contained in this bulletin.
- Turn off all power supplying this equipment before working on or inside equipment.
- Always use a properly rated voltage sensing device to confirm power is off.
- Before performing visual inspections, tests, or maintenance on this equipment, disconnect all sources of electric power. Assume all circuits are live until they are completely de-energized, tested, and tagged. Pay particular attention to the design of the power system. Consider all sources of power, including the possibility of backfeeding.
- Always practice lock-out/tag-out procedures according to OSHA requirements.
- Carefully inspect your work area, and remove any tools and objects left inside the equipment.
- Replace all devices, doors, and covers before turning on power to this equipment.
- All instructions in this manual are written with the assumption that the customer has taken these measures before performing maintenance or testing.

Failure to follow these instructions will result in death or serious injury.

WARNING: This product can expose you to chemicals including Phenyl Glycidyl Ether, which is known to the State of California to cause cancer. For more information go to www.P65Warnings.ca.gov.

WARNING: This product can expose you to chemicals including Methanol, which is known to the State of California to cause birth defects or other reproductive harm. For more information go to www.P65Warnings.ca.gov.

Codes and Standards

It is the responsibility of the users of this document to use qualified electrical personnel and to comply with applicable federal, state and local electrical codes when installing electrical products and systems.

This document adheres to the codes and standards as outlined by the National Fire Protection Association® (NFPA). Refer to NFPA 70: 2014 Edition National Electrical Code (NEC®).

Disclaimer Statement

Electrical equipment should be installed, operated, serviced and maintained only by qualified personnel. No responsibility is assumed by Schneider Electric for any consequences arising out of the use of this material.

© 1992–2018 Schneider Electric All Rights Reserved

© 1992–2018 Schneider Electric All Rights Reserved

ENGLISH

Section 3—Receiving, Handling and Storing

Receiving

1. Upon receipt, remove the packaging.
   - — Immediately inspect the new transformer for shipping damage.
   - — Refer to Replacement Parts and Accessories on page 41 for replacement parts, accessories (e.g., touch-up paint) and spare parts for minor damage.
2. Check the packing list against the product nameplate.
   - — Verify that the order and shipment align with each other and that the shipment is complete.

   NOTE: Follow Schneider Electric Conditions of Sale for shortages and errors.
3. Repackage the transformers for storage if they are not to be installed immediately.
   - — Cover all ventilation openings to protect against exposure to moisture, dust and contaminants.
   - — Leave packing materials intact until the transformers are ready to install.
4. Refer to “Conditions of Sale” for details regarding claims for equipment shortages and other errors. Contact your local Schneider Electric distributor for additional assistance.

Handling

Handle transformers carefully to avoid damage. Avoid subjecting the transformers to impact, jolting, jarring and rough handling. Ensure that transformers are transported in the upright position. When possible, transport transformers to the installation site while still mounted on their shipping pallets.

Verify that the weight of the transformer does not exceed the rated capacity of the handling equipment to be used.

Handling with Platform Dollies or Lifts, Pallet Jacks or Fork Trucks

Extreme care should be exercised when moving transformers from the bottom. See Figure 7.

- Use care to distribute the weight when transporting transformers using platform dollies, platform lifts, pallet jacks or fork trucks.
- Use hand trucks or forklifts only when the blades or forks are long enough to pass completely under the transformer enclosure or shipping pallet. Wider fork separation is preferred to distribute the weight of the unit evenly for increased stability.

Figure 7: Handling with a Fork Truck: Blades/Forks Placed under the Entire Transformer (Shipping Pallet Attached)

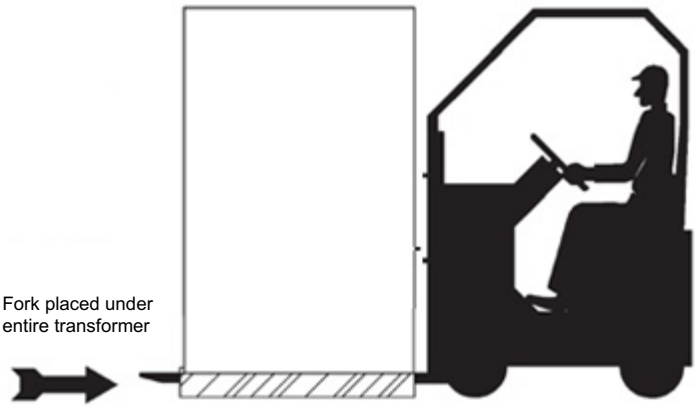

© 1992–2018 Schneider Electric All Rights Reserved

ENGLISH

Handling with Cranes: Using Cables, Chains or Straps

When lifting the transformer from above, the use of spreader bars with cables or chains is permissible. This will help avoid damage to the enclosure or equipment.

The enclosure can be removed to allow the units to be transported through small openings, lifting as the same means as shown in Figure 8 on page 12, Figure 9 on page 13, and Figures 10 and 11 on page 15. Refer to Figures 34 and 35 in Replacement Parts and Accessories on page 41 for exploded views of parts and accessories.

Ensure that the lifting cable pull angles are not less than 60 degrees from horizontal. See Figure 8 on page 12.

Figure 8: Two-Point Lift: Cable Pull Angles (Not Less than 60 Degrees from Horizontal)

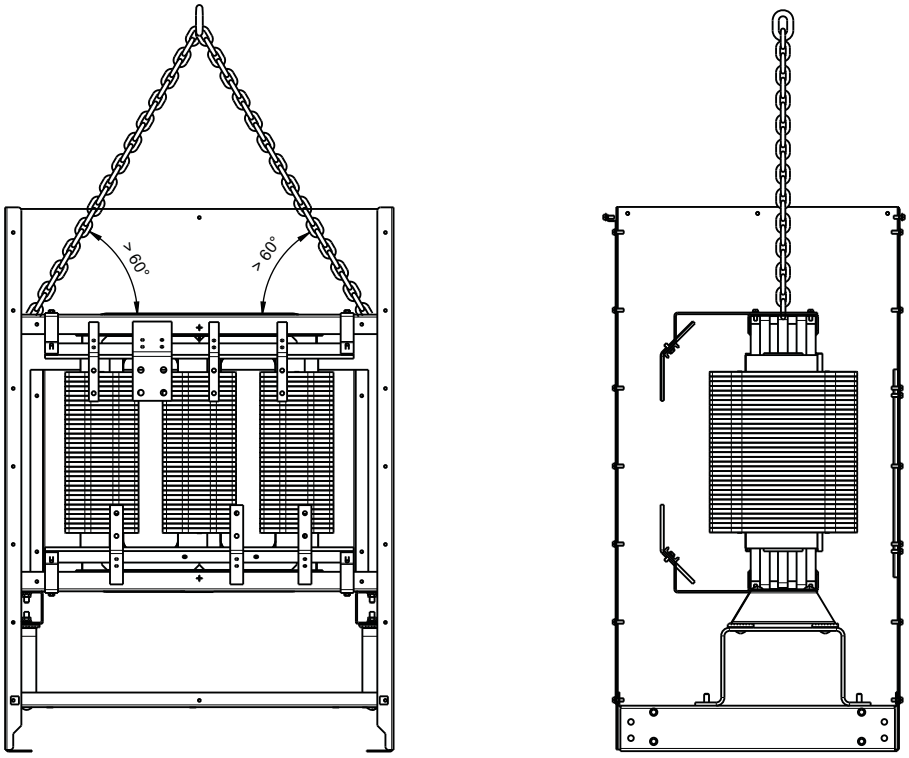

© 1992–2018 Schneider Electric All Rights Reserved

ENGLISH

Refer to Figures 9 –11 on pages 13 – 15 for other permissible lifting and handling options.

Figure 9: Two-Point Lift: Handling with Chains, Hooks and Cross Corners (Not Less than 60 Degrees from Horizontal)

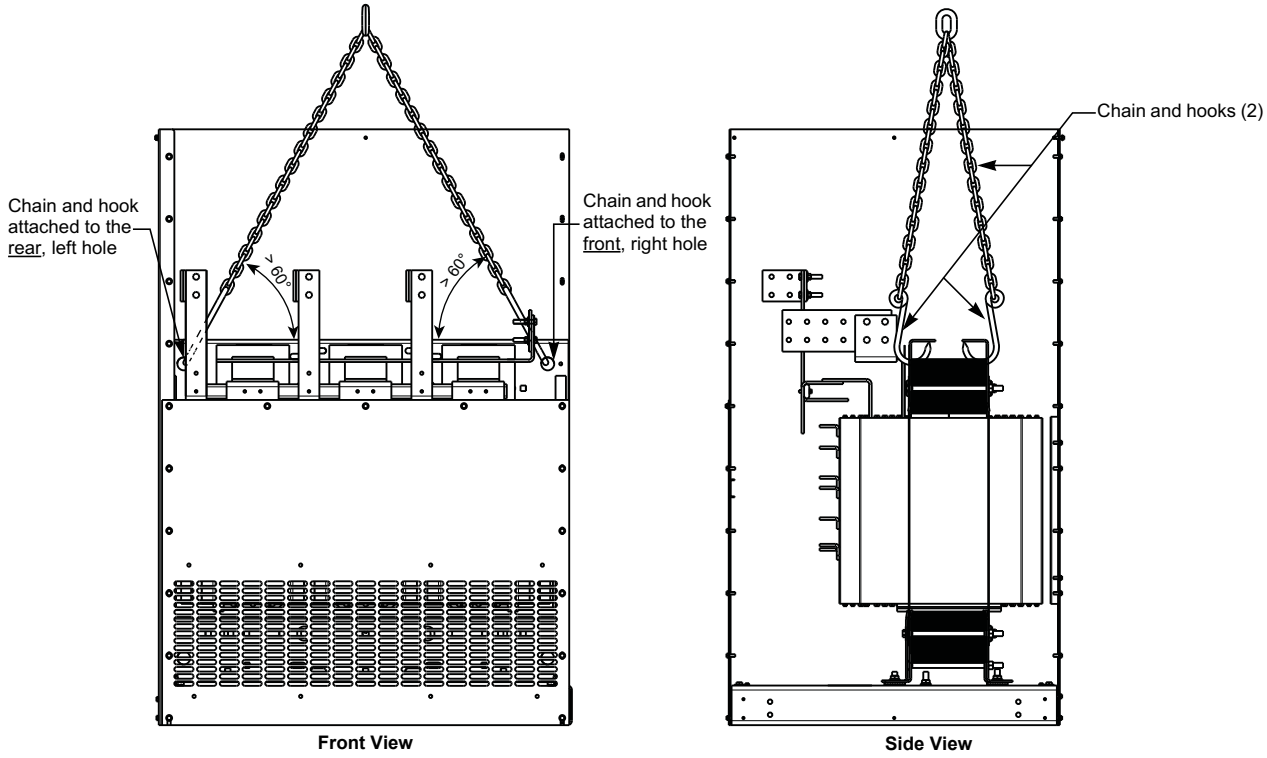

Two-point lift with chains and hooks: Top core bracket, right side and front hole. Rear bracket, left side and rear hole

© 1992–2018 Schneider Electric All Rights Reserved

ENGLISH

Figure 10: Four-Point Lift: Handling with Chains, Hooks and Four Corners (Not Less than 60 Degrees from Horizontal)

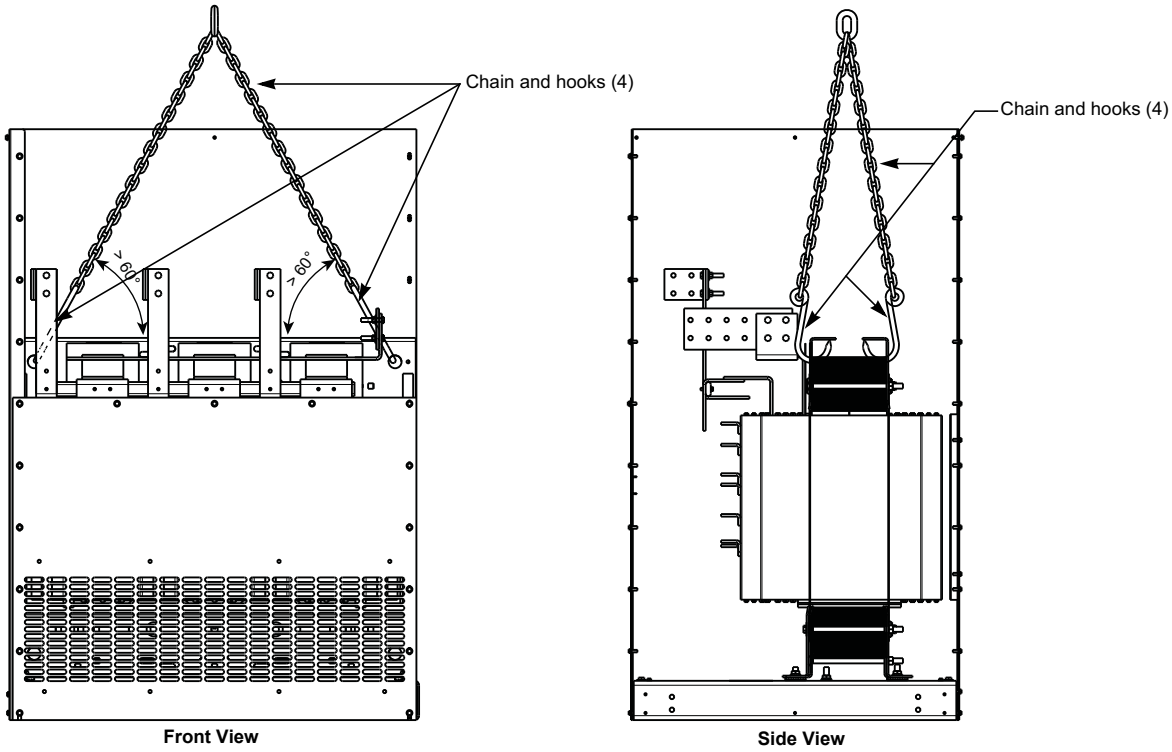

Front View **Side View**

Four-point lift: The hooks are in the front and back holes of the core bracket (4), with chains lifting on the hooks.

© 1992–2018 Schneider Electric All Rights Reserved

ENGLISH

Figure 11: Four-Point Lift: Handling with a Strap and Hooks (Not Less than 60 Degrees from Horizontal)

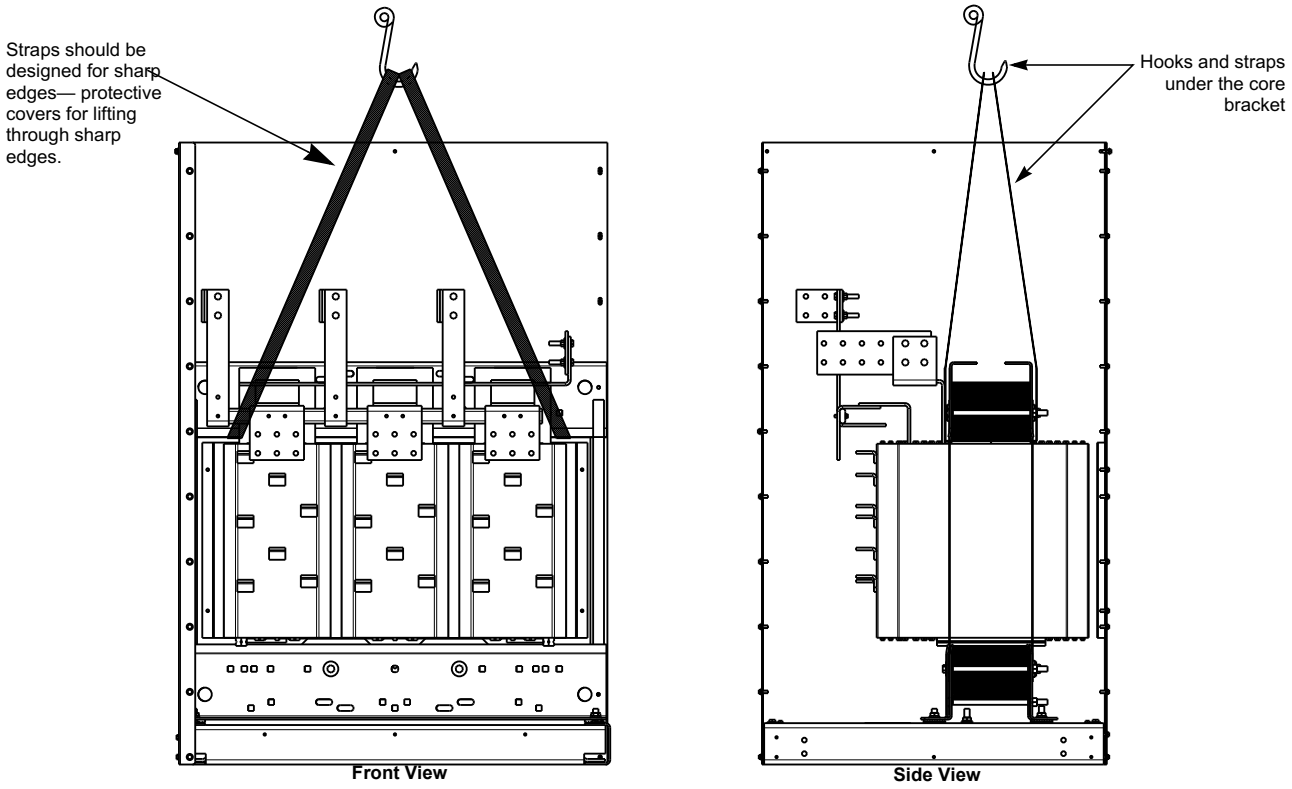

Four-point lift: The straps are under the core brackets, with the front-to-back straps coming together at the top with a hook. Use straps with protective cover, core clamps edges are sharp.

Handling Enclosure Styles D, H and K after Removal of the Shipping Pallet

Hand trucks and forklifts can access and move the transformer via the front and rear openings below the bottom of the base. See Figure 12. Follow the same handling instructions (beginning on page 11) as if the pallet is still attached.

Figure 12: Handling with a Pallet Jack: Enclosure Styles D, E, H and K after Removing the Shipping Pallet

© 1992–2018 Schneider Electric All Rights Reserved

ENGLISH

Storing

Leave the packing material that encloses the transformer in place until the unit is ready for its final placement and wiring. This will help to protect the transformer enclosure and internal parts from dirt, water, moisture contamination and physical damage during storage. Provide extra measures to protect the transformer when the original packing material cannot be retained.

Store transformers indoors in a clean, dry, and heated building with uniform temperatures and adequate air circulation. If necessary, install electric heating to maintain a uniform temperature above the ambient temperature to prevent condensation.

Protect transformers from weather and contamination when it is not possible to store the transformers indoors.

Before energizing the transformer, complete the steps in Pre-commissioning/Pre-energizing Checks and Testing along with the following steps:

1. Test the insulation resistance if storage in a controlled environment was not feasible. Refer to Insulation Resistance on page 39.
2. Dry the unit if test levels are unacceptable:
   a. Use two heaters or lamps per coil at 120 V, 50 W to apply external heat to the coils.
   b. Mount the heater or lamp directly below the coils located at the front and rear of the core.

NOTE: Outdoor transformers are not weather resistant until they are properly and completely installed and energized. Treat outdoor transformers in exactly the same manner as indoor transformers until after they are installed.

© 1992–2018 Schneider Electric All Rights Reserved

ENGLISH

Section 4—Installation

Locating/Placing Ventilated and Non-ventilated Transformers

1. Remove all packaging material. Keep the shipping pallet attached to the transformer to assist with moving the unit to its final installation location.
2. Verify that the nameplate matches the description from the building layout drawings (kVA, primary and secondary voltages, etc.). See Figure 13.

Figure 13: Sample Nameplate

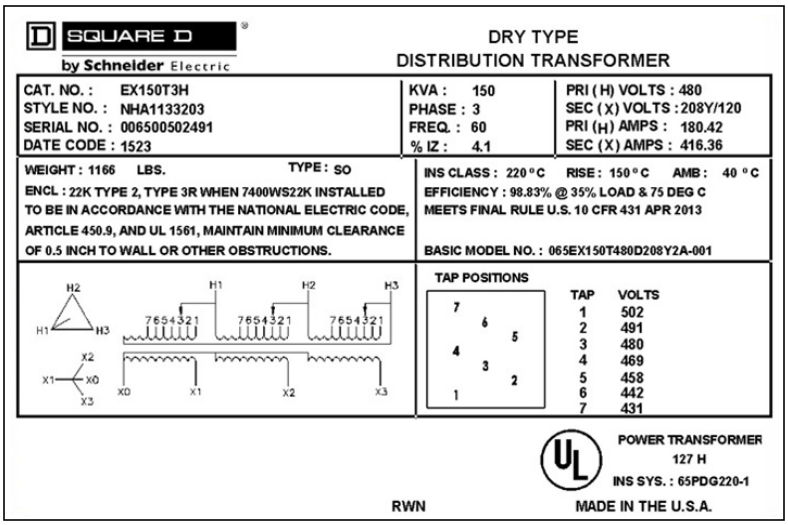

3. Locate the unit per the building's layout drawing.
4. Verify the environment is suitable for the enclosure type.
5. Ensure the location is readily accessible to qualified personnel (per NEC 450.13). Units located in the open can be mounted on walls, columns, or otherwise supported from structures.
6. Ensure adequate ventilation since it is essential to properly cool ventilated transformers. Refer to National Electrical Code (NEC®) Article 450.
   - The minimum distance is marked on Nameplate NEC 450.9. See Figure 14 on page 18.
   - Minimum distance varies by enclosure style. See the approval drawing from Schneider Electric for minimum distance.
   - Clean, dry air is desirable.
   - Filtered air may reduce maintenance if the location of the transformer presents a problem.

© 1992–2018 Schneider Electric All Rights Reserved

ENGLISH

Figure 14: Minimum Distance Marked on Nameplate NEC 450.9

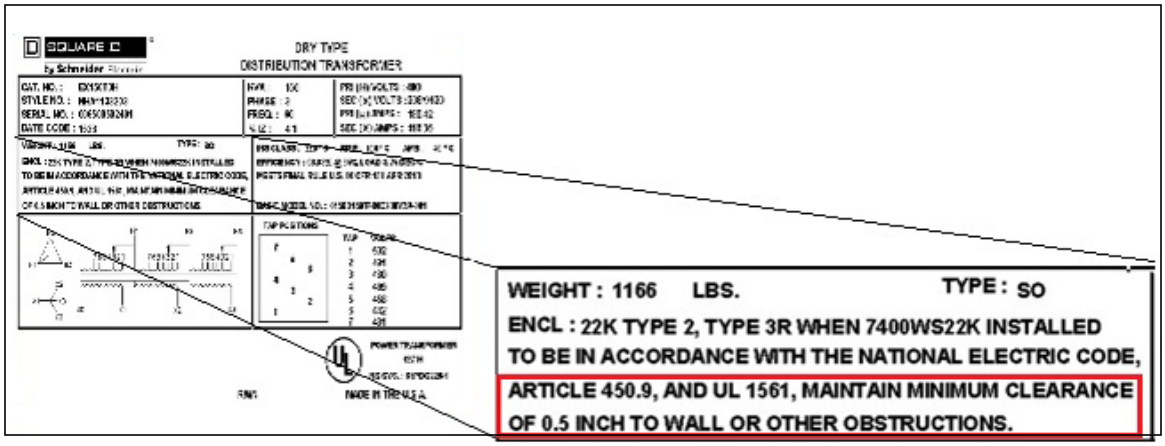

7. Mount any accessories prior to installing the transformer when using wall or ceiling (trapeze) mounting.
   a. Observe the four mounting hole locations in each enclosure base.
   b. Obtain the actual dimensions via approval drawings from Schneider Electric.
   c. Secure the units using one of two mounting methods: without floor mounting brackets (Figures 15–16 and Figure 17 on page 19) or with floor mounting brackets (Figures 18 and 19 on page 19).
8. Place the transformer in final position.

Figure 15: Mounting: Enclosure Styles D, H, K, and E

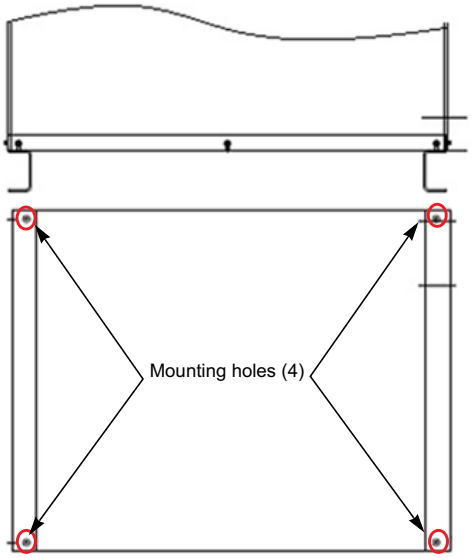

Figure 16: Enclosure D, H, K, and E

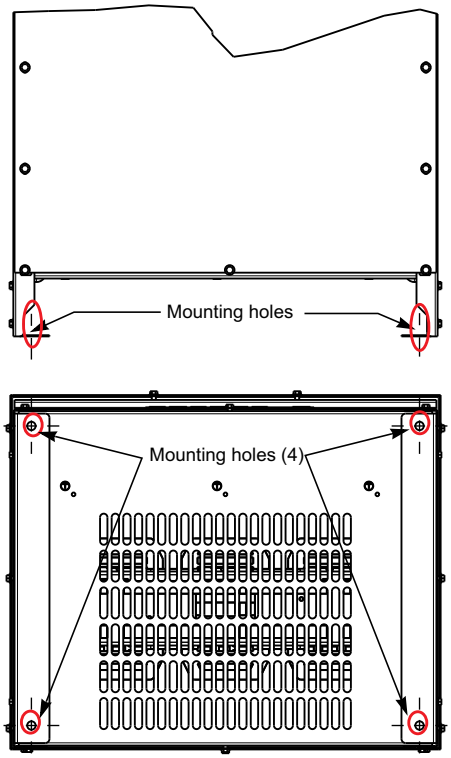

© 1992–2018 Schneider Electric All Rights Reserved

ENGLISH

Figure 17: Mounting Enclosure Style J: Ventilated

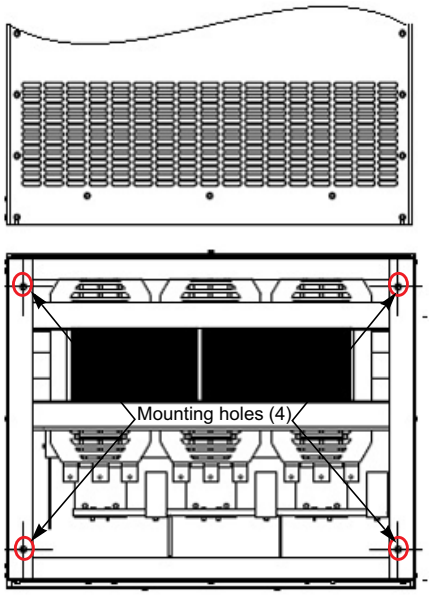

Units not for use on combustible floor (open bottom)

Figure 18: Floor Mounting Bracket: Enclosure Style K

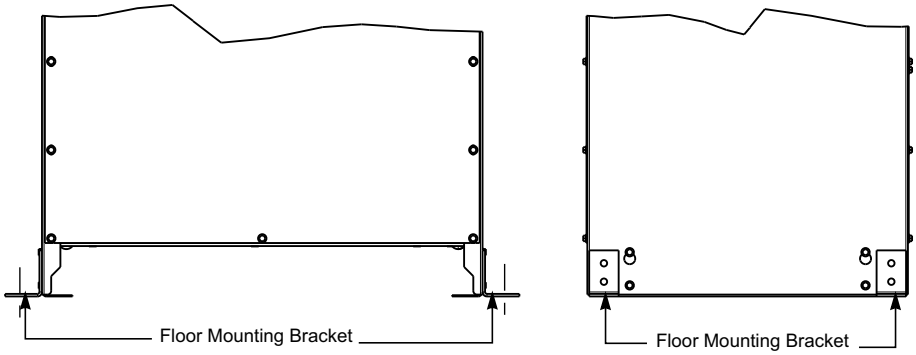

Figure 19: Floor Mounting Bracket: Enclosure Style K

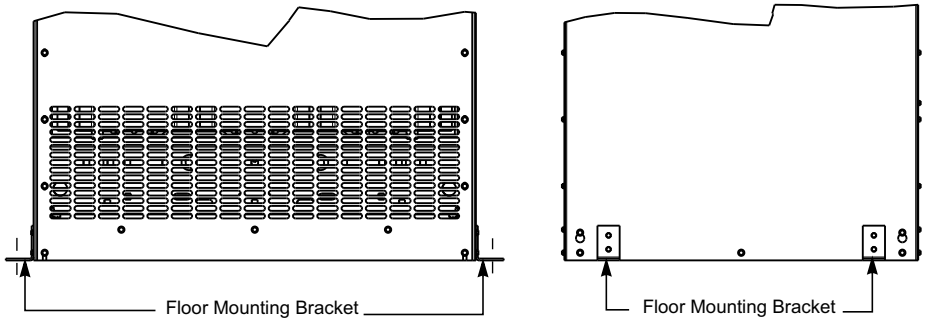

© 1992–2018 Schneider Electric All Rights Reserved

ENGLISH

All Enclosure Styles (D, E, F, H, K and J)

- Transformers Installed Indoors (Styles D, E, F, H, K and J):
  - — Completely enclosed or completely enclosed with ventilated openings; complies with NEC 450.21 (A) Exception
  - — Units greater than 112.5 kVA
  - — Have 428°F (220°C) or 392°F (200°C) insulation systems; complies with 450.21 (B) Exception No. 2

See Figure 20.

Figure 20: Transformers Installed Indoors: NEC 450.21 Exceptions A or B from Sample Nameplate

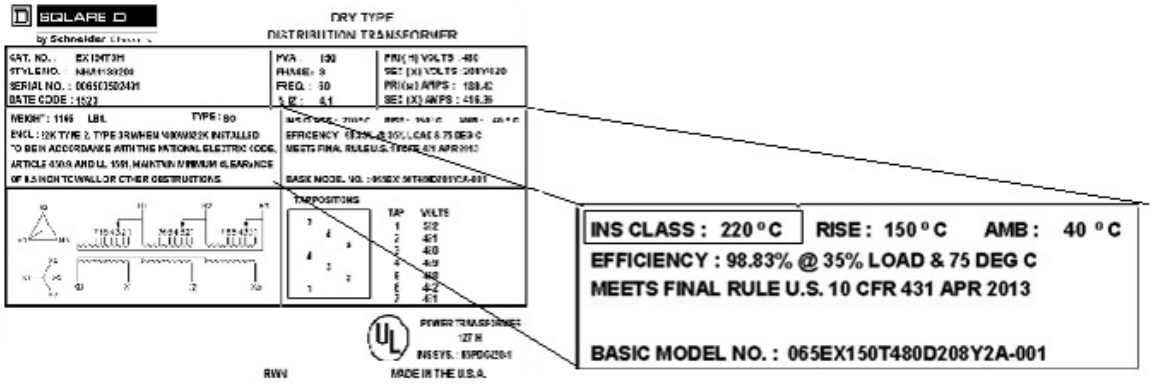

Table 1: Enclosure Clearances

Enclosure Style	Front Clearance	Side Clearance (in. / mm)	Rear Clearance (in. / mm)
D	Working Clearance for all styles vary substantially depending on voltage and specific application. Refer to NEC 110.26	0.50 / 12.7	Type EE – 3 / 76.2 All other styles – 6 / 152
H			3 / 76.2
E			3 / 76.2
K			0.50 / 12.7
J			0.50 / 12.7
F			12 / 305

Transformers can be converted from Floor to Wall mounted (See Table 2 below and Figure 21 on page 21) or Floor to Trapeze mounted (See Table 3 and Figure 22 on page 22) using factory available kits. The kits are pre-punched to align with enclosure mounting holes; and, when the transformer is installed, holds the minimum clearance for the units. New Style K wall mounting bracket allows for 6 in. (152 mm) and 3 in. (76 mm) clearances, all other styles require a 6 in. (152 mm) clearance.

The factory kits do not include hardware, hardware must be supplied by the customer. Hardware includes the thread rod for trapeze mounting the transformers. The designer of record must size and choose the anchors and hardware because of the large variety of construction materials and techniques. Schneider Electric can not advise on the anchoring, the wall mounting, or sizing of rods for trapeze mounting.

© 1992–2018 Schneider Electric All Rights Reserved

ENGLISH

Table 2: Converting from Floor to Wall Mounting (using factory kits)

Enclosure Style	Enclosure Number	Maximum Weight (lb. / kg)
D	17 – 20	700 / 317
H	17 – 18	700 / 317
E	17 – 20	700 / 317
K	17 – 20	850 / 386

Figure 21: Wall mounted transformer

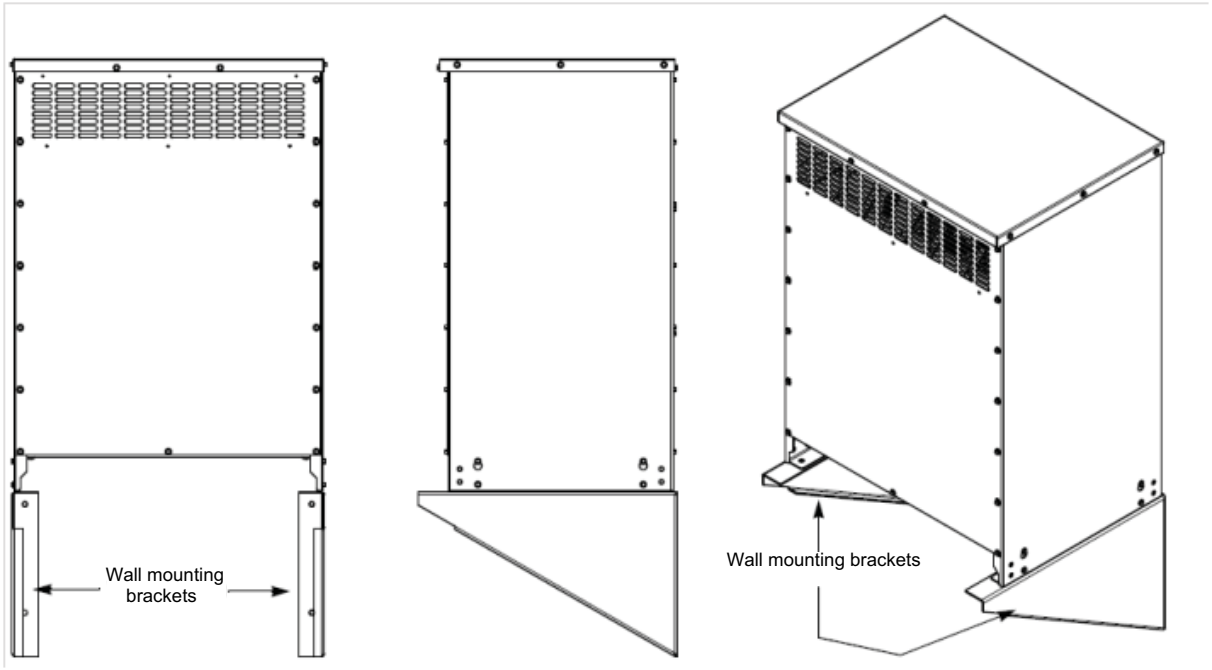

Front View **Side View**

© 1992–2018 Schneider Electric All Rights Reserved

ENGLISH

Table 3: Converting from Floor to Trapeze (Ceiling) Mounting (using factory kits)

Enclosure Style	Enclosure Number	Maximum Weight (lb. / kg)
D	17 – 24	1200 / 544
H	17 – 18	1200 / 544
E	17 – 22	1200 / 544
K	17 – 22	1200 / 544

Figure 22: Trapeze (Ceiling) mounted transformer

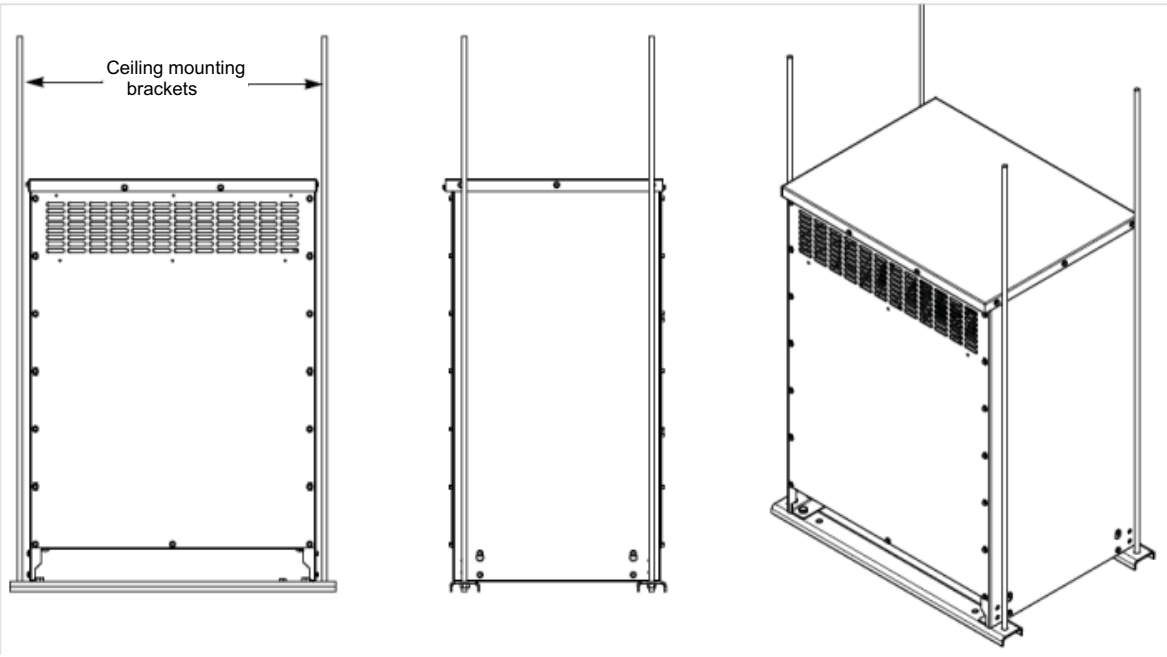

Front View **Side View**

Enclosure D, E, H, K, J can be converted to Type 3R using field installed kits. See Figure 23 on page 23.

Type F enclosure – must be factory order if installed outdoors.

© 1992–2018 Schneider Electric All Rights Reserved

ENGLISH

Figure 23: Type 3R Enclosure Kits

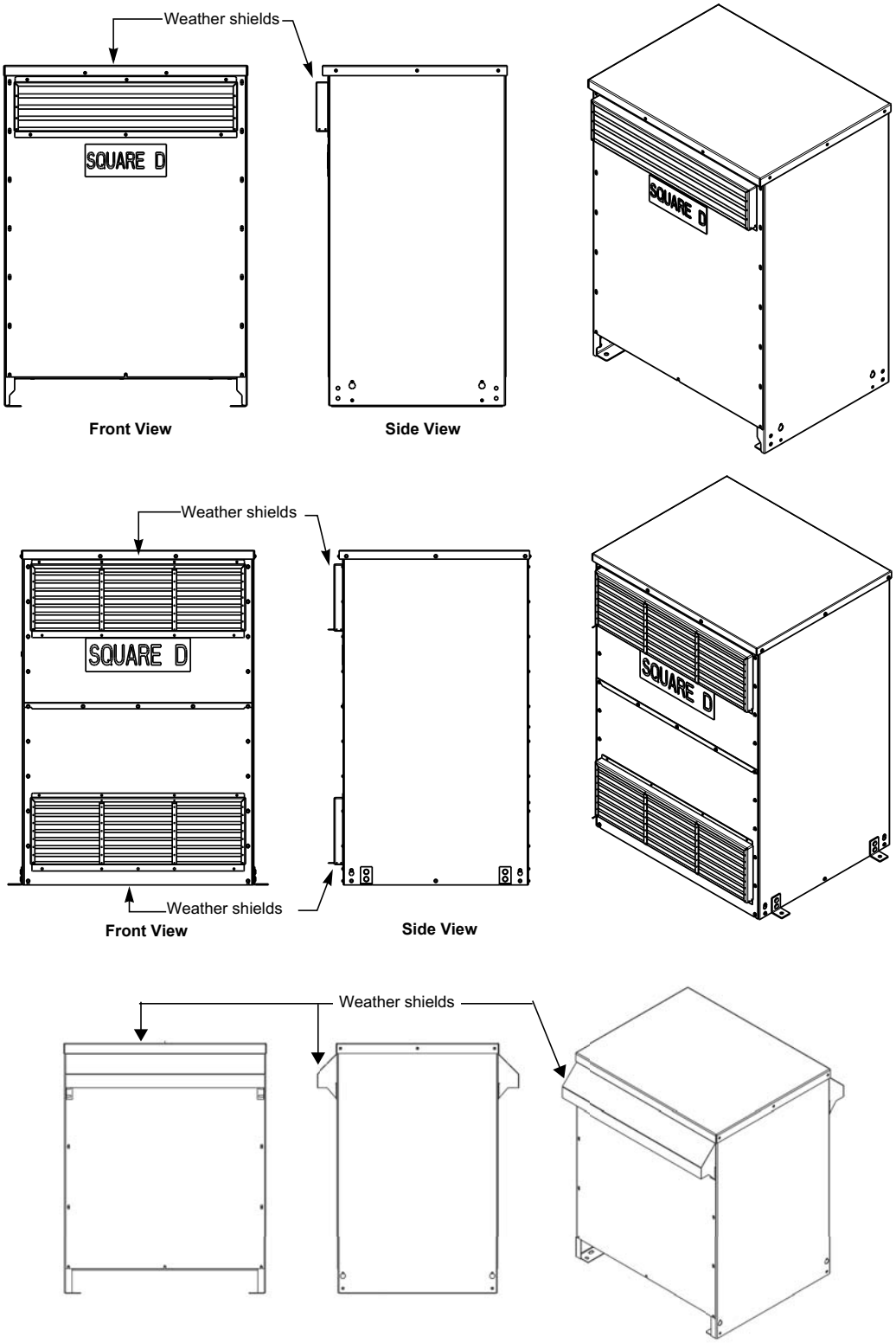

© 1992–2018 Schneider Electric All Rights Reserved

ENGLISH

Grounding

1. Permanently and adequately ground the enclosure and core assembly of dry-type transformers in accordance with NEC requirements.
   - — Windings may be grounded with consideration given to local conditions and in accordance with the NEC.
   - — The ground terminal bar must be UL listed for this purpose.
   - — In accordance with NEC 450.10, the terminal bar shall be bonded to the enclosure in accordance with NEC 250.12 and shall not be installed on or over any ventilated openings.
2. Connect the transformer, related accessories and components to ground in accordance with NFPA 70 (NEC).
3. Terminate all grounding and bonding conductors at a common equipment ground point on the enclosure.
4. Remove paint from around the area where the ground terminal bar is mounted to increase contact with enclosure parts.
   - — Enclosure Styles D, E and H: An area is available in the transformer's base to drill and mount the ground terminal bar.
   - — Enclosure Style K: Three pre-drilled holes are stamped ground to mount the ground terminal bar.
   - — Enclosure Style J: Two pre-drilled holes are stamped ground to mount the ground terminal bar.

Square D brand secondary lug kits include a four-conductor ground terminal bar. The bar can also be obtained as a separate device from Schneider Electric. Refer to Table 6 on page 45 and see Figure 24.

Figure 24: Four-conductor Ground Terminal Bar

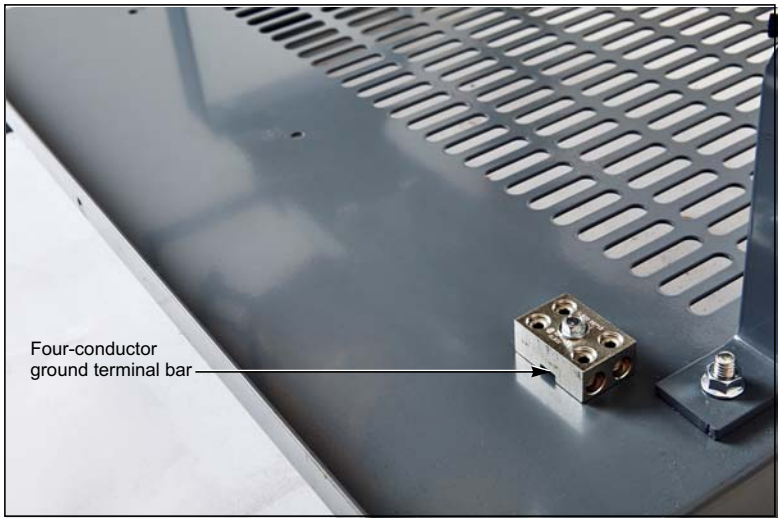

© 1992–2018 Schneider Electric All Rights Reserved

Seismic Qualifications

Seismic limits for dry-type low voltage transformers are obtained from tri-axle shake table test results that are conducted in accordance with the AC156 test protocol. Certifications are based on the location where units are installed and building codes governing the installation.

Building codes results are available for CBC 2001, CBC 2007, CBC 2010, IBC 2000, IBS 2003, IBC 2006, IBC 2009, NBC 2005, NBCC 2005, NBCC 2010, NFPA 5000, UBC 94, CBC 95, UBC97 and UFC 3-310-04.

Contact your local Schneider Electric distributor, or call 1-888-Square D (1-888-778-2733) to obtain the specific level of Sds, z/h and Ip for each enclosure style.

The levels supplied are based on the units being mounted and the notes on the approval drawings of each part number. Drawings are available that include mounting dimensions, mounting hole dimensions, overall dimensions, unit weight and approximate center of gravity location to assist in a seismic qualification. Contact your local Schneider Electric distributor, or call 1-888-Square D (1-888-778-2733) to obtain these drawings.

Other parties are responsible for detailing the equipment connection and anchorage requirements (including the lateral restraint system, if appropriate) for the given transformer installation. The installer and manufacturers of the anchorage and lateral restraint system are responsible for ensuring that the mounting requirements are met.

Sound/Vibration Control

The transformer has been designed to minimize the amount of audible sound produced. Sound isolation pads are secured between the transformer mounting bracket and the enclosure using bolts and nuts. The mounting hardware is tightened prior to shipment to prevent damage.

Loosen the nut one full turn to float the transformer on the isolation pads, thereby isolating the transformer from the enclosure. This will reduce audible sound levels even further. See Figures 25 and 26.

Figure 25: Loosening the Nut One Full Turn (Four Places) Label

Figure 26: Floating the Transformer on the Isolation Pads/Sound Damper

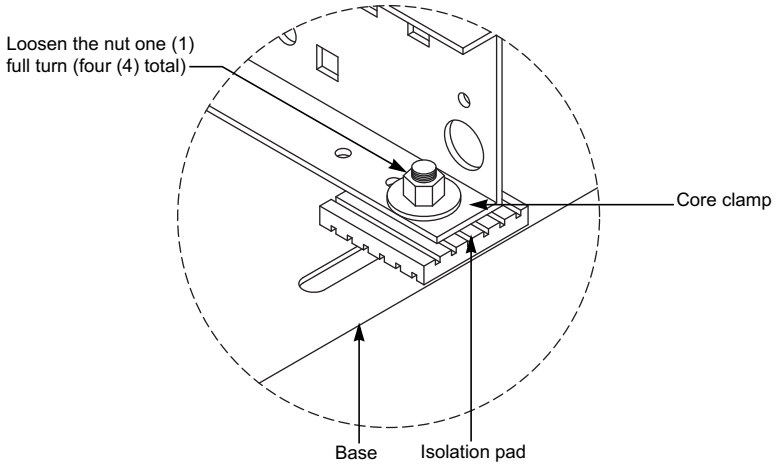

© 1992–2018 Schneider Electric All Rights Reserved

ENGLISH

In addition, the area where the transformer is located can affect the sound level:

- ❑ Try to avoid installing the transformer in a corner, narrow hall or in an area with smooth surfaces. Doing so can result in the sound being reflected and amplified.
- ❑ Securely fasten all the enclosure panels. Loose panels can result in rattling, thereby increasing the sound produced.
- ❑ Use flexible conduit, if possible.
- ❑ Ensure that the type of structure on which the transformer is mounted is strong enough to support the weight of the transformer.

Enclosure Style K

Enclosure Style K bolts are accessible from the front with an extension. See Figure 27.

Figure 27: Enclosure Style K: Bolts Accessible from the Front of the Transformer

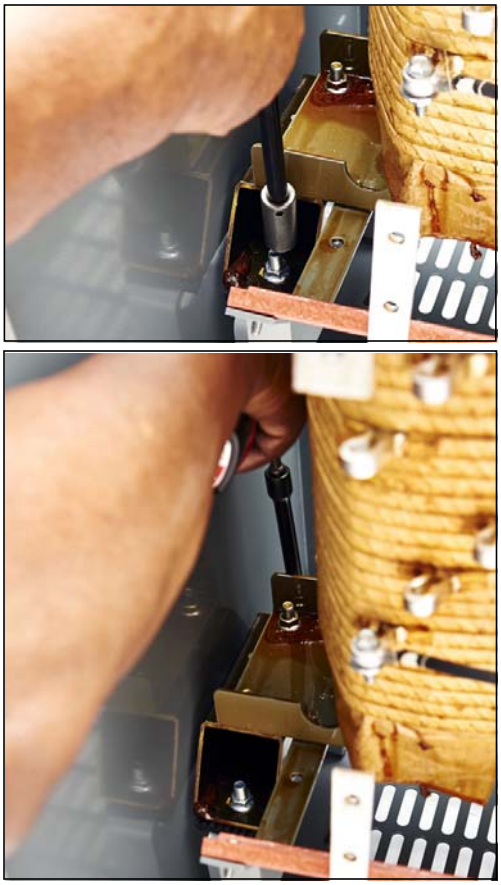

Enclosure Styles D, E, H and J

Enclosure Styles D, E, H and J bolts are accessible from the front.

See Figure 26 on page 25 for the access for these enclosures.

© 1992–2018 Schneider Electric All Rights Reserved

Making Electrical Connections

- ❏ Use flexible raceways, conduits and connectors, when possible, as attachments to transformer enclosures. This will help to reduce audible noise generation.
- ❏ Adhere to NFPA 70 (NEC) and minimum wire bending space requirements for the transformer enclosure. As an industry standard, bundle associated phase, neutral and equipment grounding conductors together within the transformer enclosure.
- ❏ Always use a calibrated torque wrench to tighten electrical connectors and terminals. For additional guidance, refer to Standard UL468A.
- ❏ Ensure that raceways, conduits and connectors enter the enclosure only in an area shown on the drawings. Access points for each enclosure style are listed below:

- Enclosure Style D: (See Figure 28)
  - — Front section of the transformer
  - — Side and bottom access
- Enclosure Style E: (See Figure 28)
  - — Front section of the transformer
  - — Side and bottom access
- Enclosure Style H: (See Figure 28)
  - — Front section of the transformer
  - — Side and bottom access
- Enclosure Style K: (See Figure 28)
  - — Front section of the transformer
  - — Side and bottom access

Figure 28: Access Point: Enclosure Styles D, E, H and K

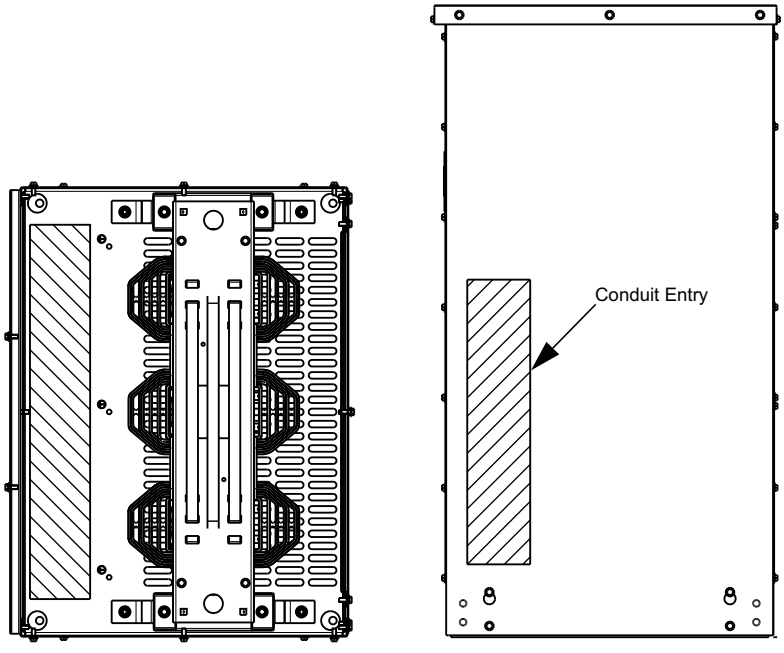

Looking Down (Front to the LEFT)

Side View (area is the front section)

© 1992–2018 Schneider Electric All Rights Reserved

ENGLISH

- Enclosure Style F:
  - — Bottom section of the transformer
  - — Air connection chambers offered if side access is needed
- Enclosure Style J: (See Figure 29)
  - — Front section of the transformer
  - — Side access
  - — Open bottom access front to the core clamps

Figure 29: Access Point: Enclosure Style J

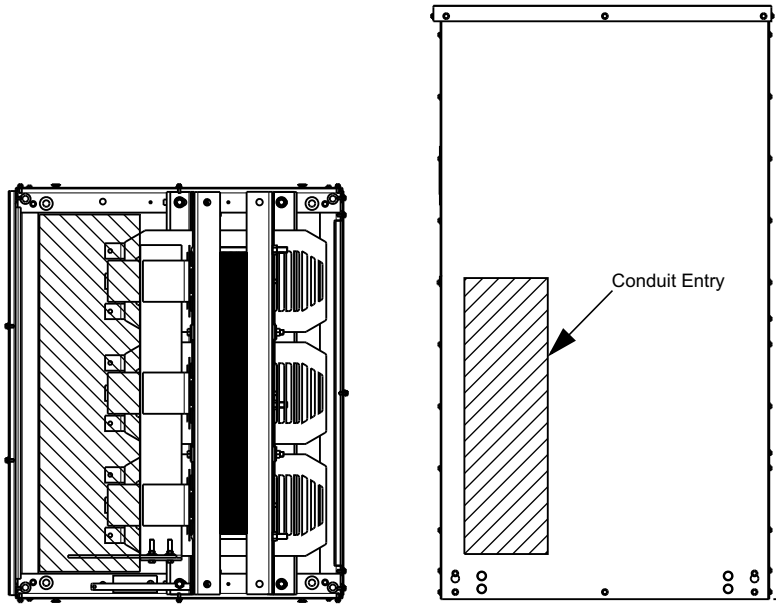

Looking Down (Front to the LEFT)

Side View
(area is the front section)

❑ Keep all access points below the top terminal board to prevent heat from exiting through the raceways, conduits and connectors. The sticker will show this top location on all enclosure styles (also shown on drawings). See Figure 30.

Figure 30: Label to Show Top Location on Enclosures (Access Points Below the Top Terminal Board)

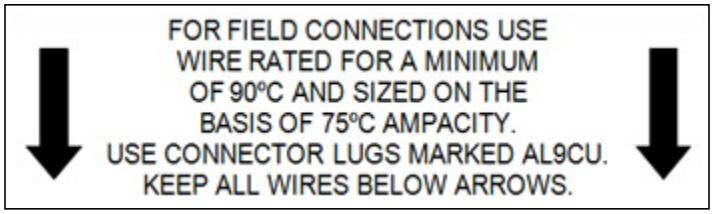

© 1992–2018 Schneider Electric All Rights Reserved

- ❏ Ensure that the side access complies with NEC 312.6 (A): Minimum Wire-Bending at Terminals. Bottom access must comply with NEC 312.6 (B): Minimum Wire-Bending Space at Terminals.
- ❏ Follow UL 1561 which requires that all lugs be suitable for 194°F (90°C). In addition, the conductors' temperature rating table must be 167°F (75°C) for the size to meet the current requirements of the overcurrent protection device and nameplate currents. Refer to Table 5 on page 44, Table 6 on page 45 and Table 7 on page 46 for a list of Square D lug kits, wire ranges by kVA and US voltage systems.
- ❏ Make sure that the contact surface is clean. This will minimize the possibility of a high resistance contact which could cause localized heating and possible premature failure. Refer to Connections and Contact Surfaces on page 38 for instructions to apply an approved electrical compound.
- ❏ Connect phases to proper terminals for proper motor-rotation. The phase diagram is shown on nameplate. The nameplate also shows the taps locations and voltage rating for each tap. See Figure 31.

Figure 31: Phase Diagram, Tap Locations and Voltage Rating Marked on Nameplate

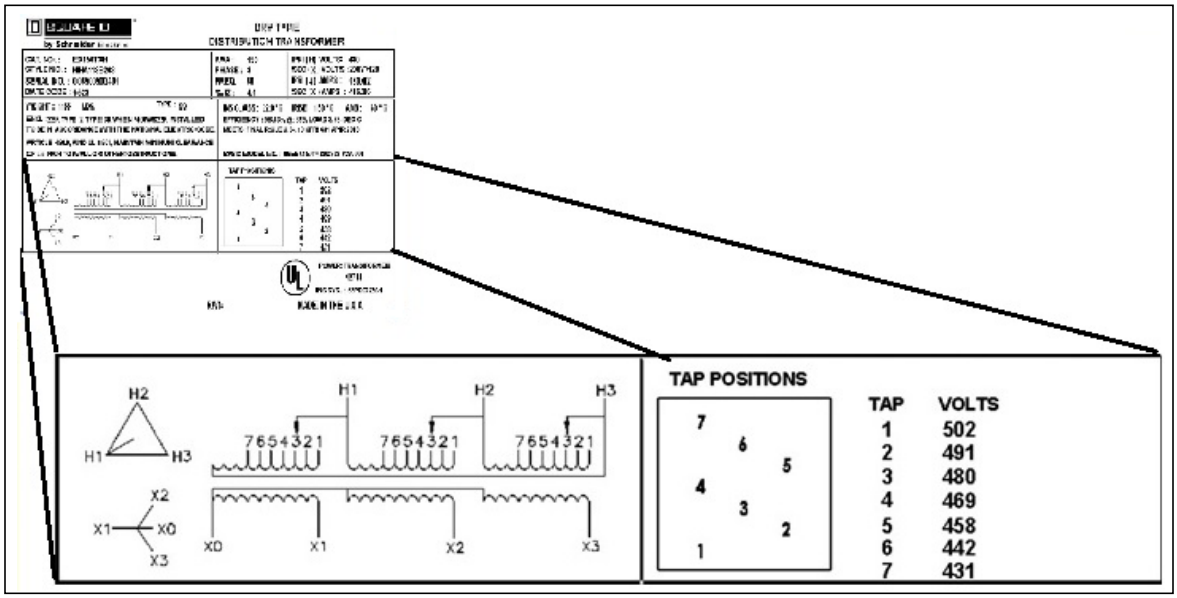

© 1992–2018 Schneider Electric All Rights Reserved

- ❑ Connecting the source of supply to the transformer secondary is permitted by NE C450.11 where the installation conforms to the manufacturer's instructions.

  When the source of supply is connected to the transformer secondary, the inrush current will increase. The overcurrent device should be selected based on NEC 450.3(B) using the 250% allowance in order to reduce the potential for nuisance tripping during energization. Secondary overcurrent protection will be required.

  Do not make any connections to the supply side HO or XO terminals on a WYE configured transformer winding. See Figure 32.

Figure 32: Caution Label for Delta Wye or Wye Delta Connected Transformers

© 1992–2018 Schneider Electric All Rights Reserved

Pre-commissioning/Pre-energizing Checks and Testing

Cleaning

1. Ensure that all of the packing material, including any packing material used inside the enclosure of the transformer used to support and protect the unit during shipping, have been removed.
2. Vacuum away as much dust as possible. Dust will act as a thermal insulating material which will increase the temperature of the unit and could possibly decrease operational life. Refer to Cleaning on page 38.

Visual and Mechanical Checks

Perform the following visual and mechanical checks below. In addition, refer to Performing Visual and Mechanical Checks on page 37 for a detailed listing of instructions.

- ❑ Visually inspect the transformer for physical damage. Repair any physical damage, if possible, and provide suitable protective barriers to prevent future damage.
- ❑ Compare the transformer nameplate information with the drawings and/or specifications for the installation.
- ❑ Verify proper connection of the taps in accordance with the nameplate information.
- ❑ Check the clearance of all electrical connections. Verify all connections for tightness with a calibrated torque wrench.
- ❑ Visually check the core, frame, enclosure, conduits, raceways and conductors for proper ground bonding. In addition, refer to Grounding and Bonding on page 39.

© 1992–2018 Schneider Electric All Rights Reserved

ENGLISH

Electrical Testing

⚠ DANGER

HAZARD OF ELECTRIC SHOCK, EXPLOSION, OR ARC FLASH

- Apply appropriate personal protective equipment (PPE) and follow safe electrical work practices. See NFPA 70E. NOM-029-STPS-2011, or CSA Z462.
- This equipment must be installed and serviced only by qualified electrical personnel.
- Perform such work only after reading and understanding all of the instructions contained in this bulletin.
- Turn off all power supplying this equipment before working on or inside equipment.
- Always use a properly rated voltage sensing device to confirm power is off.
- Always practice lock-out/tag-out procedures according to OSHA requirements.
- Carefully inspect your work area, and remove any tools and objects left inside the equipment.
- Replace all devices, doors, and covers before turning on power to this equipment.
- All instructions in this manual are written with the assumption that the customer has taken these measures before performing maintenance or testing.

Failure to follow these instructions will result in death or serious injury.

Refer to Maintenance on page 37 to perform the following pre-commissioning electrical testing:

- ❑ Measure contact resistance using a low resistance ohmmeter. Refer to Contact Resistance on page 39.
- ❑ Perform insulation resistance tests with an appropriate device. Refer to Insulation Resistance on page 39.
- ❑ Perform a turns ratio test on all taps and on the full winding voltages for each phase. Refer to Turns Ratio on page 39.
- ❑ Measure and record the winding resistances on larger transformers (>500 kVA). Refer to Winding Resistance on page 39.

© 1992–2018 Schneider Electric All Rights Reserved

ENGLISH

Section 5—Operation

⚠ DANGER

HAZARD OF ELECTRIC SHOCK, EXPLOSION, OR ARC FLASH

- Apply appropriate personal protective equipment (PPE) and follow safe electrical work practices. See NFPA 70E, NOM-029-STPS-2011, or CSA Z462.
- This equipment must be installed and serviced only by qualified electrical personnel.
- Perform such work only after reading and understanding all of the instructions contained in this bulletin.
- Turn off all power supplying this equipment before working on or inside equipment.
- Always use a properly rated voltage sensing device to confirm power is off.
- Before performing visual inspections, tests, or maintenance on this equipment, disconnect all sources of electric power. Assume all circuits are live until they are completely de-energized, tested, and tagged. Pay particular attention to the design of the power system. Consider all sources of power, including the possibility of backfeeding.
- Always practice lock-out/tag-out procedures according to OSHA requirements.
- Carefully inspect your work area, and remove any tools and objects left inside the equipment.
- Replace all devices, doors, and covers before turning on power to this equipment.
- All instructions in this manual are written with the assumption that the customer has taken these measures before performing maintenance or testing.

Failure to follow these instructions will result in death or serious injury.

Effects of Humidity

The standard dip and baked varnish process does not support the growth of fungus. The only concern when units are stored in high humidity areas is retaining the integrity of the insulation material. If units are properly maintained and cleaned at shut down prior to long periods of de-energization there should be no issue with fungus.

Humidity conditions are unimportant as long as the transformer is energized. However, follow the precautionary steps listed below if the transformer is de-energized, is allowed to cool to ambient temperature, and will exceed a shutdown of 12 hours (especially in high humidity conditions).

1. Place small strip heaters in the bottom of the unit shortly after shutdown to maintain the temperature of the unit a few degrees above that of the outside air.
2. Inspect the unit for evidence of moisture before returning it to service.
3. Check the insulation resistance. If evidence of moisture exists, or if the insulation resistance is less than 1 megohm, dry out the transformer by placing it in an oven or by blowing heated air over it.

© 1992–2018 Schneider Electric All Rights Reserved

ENGLISH

Enclosure Temperature

The temperature rise on the enclosure exterior for ventilated transformers should not exceed 122°F (50°C), except as indicated in UL 1561.

Prior to Energizing the Transformers

1. Remove any temporary braces. See Figure 33.
2. Check bolted electrical connections. Refer to Making Electrical Connections on page 27 for a detailed check list.
3. Remove excess dirt accumulations from the transformer windings and insulators to permit free circulation of air and to guard against the possibility of insulation breakdowns. Refer to Cleaning on page 38 for a detailed check list.
4. Perform insulation resistance tests with an appropriate device. Refer to Insulation Resistance on page 39 for a detailed instructions.
5. Perform a visual and mechanical check of the transformer and its surrounding environment. Refer to Performing Visual and Mechanical Checks on page 37 for a detailed check list.

Figure 33: Removing Temporary Braces

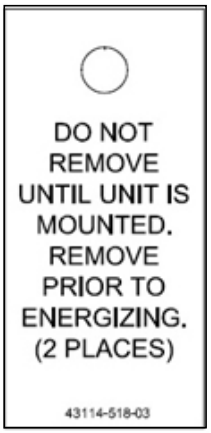

Energizing the Transformer

1. Follow all safety precautions and requirements for PPE as outlined in NFPA 70E and any other applicable standards and/or codes.
   a. Immediately de-energize the transformer if there is any indication of arcing (visual or audible) at any time during the initial start-up.
   b. Investigate and correct the cause of the arcing before re-energizing the unit.
2. Investigate and correct sources of excessive noise. When energized, the transformer will make some audible noise. Excessive mechanical noise, hums or rattles may be an indication of improperly installed or tightened hardware or enclosure parts.
3. Measure and verify the primary and secondary phase-to-phase and phase-to-ground voltages for all windings.
   a. Where applicable, measure and verify phase-to-neutral voltages, as well.
   b. Record and save the values for future reference.

   NOTE: Phase-to-phase, phase-to-ground and phase-to-neutral measurements will verify that the transformer is functioning per the nameplate voltages.

   c. Measure phase-to-ground voltages.
   d. Record and save the values for future reference.

   NOTE: Phase-to-ground voltages will verify that the unit has been installed correctly.

© 1992–2018 Schneider Electric All Rights Reserved

4. Move one tap at a time, or verify that the jumper lands per the wiring diagram as shown on the nameplate. See Figure 31 on page 29.

   NOTE: Do not change taps while the transformer is energized.

   a. Adjust the transformer taps as necessary to match the actual voltage requirements.

   b. Ensure taps are cleaned of varnish or other insulating material.

5. Perform a phase rotation check with an appropriate device for loads that are phase sensitive (e.g., certain motor or drive applications).

   a. Follow the manufacturer's instructions for the device.

   b. Correct phase rotation errors before energizing the transformer.

© 1992–2018 Schneider Electric All Rights Reserved

ENGLISH

© 1992–2018 Schneider Electric All Rights Reserved

Section 6—Maintenance

Performing Visual and Mechanical Checks

⚠ DANGER

HAZARD OF ELECTRIC SHOCK, EXPLOSION, OR ARC FLASH

- Only qualified personnel should clean, inspect maintain and test transformers.
- Turn off power supplying this equipment before working on it.
- Disconnect and electrically isolate power to the transformer so that no accidental contact can be made with energized parts.
- Discharge all static charges held by coils.

Failure to follow these instructions will result in death or serious injury.

1. Perform a visual inspection of the transformer and its surrounding environment.
   a. Inspect the enclosure for any physical damage.
   b. Repair any damage, if possible.
   c. Provide guards to prevent future damage.
2. Record operational data while the transformer is still energized and in service.
3. De-energize the transformer prior to performing work on the unit.
   a. Follow all safety procedures to place the unit into an electrically safe condition.
   b. Remove the access covers. Inspect for:
   — dirt on insulating surfaces and at areas which tend to restrict air flow.
   — loose connections.
   — the condition of tap changers or terminal boards.
   — the general condition of the transformer.
4. Inspect the enclosure, transformer, terminals, terminal boards, and insulators for signs of overheating from internal or external sources. Check for voltage creepage over insulating surfaces, evident by tracing or carbonization.
5. Check for evidence of rusting, corrosion and paint deterioration. Repair any rust and corrosion where necessary.

Frequency

The frequency at which transformers should be inspected depends on operating conditions.

For clean, dry locations, annual inspections may be sufficient. However, for other locations, such as where the air is contaminated with dust or chemical fumes, an inspection at three- or six-month intervals may be required. Usually after the first few inspection periods, a definite schedule can be set up based on the transformer's existing conditions.

© 1992–2018 Schneider Electric All Rights Reserved

ENGLISH

Severe, Environmental or Special Events

- ❑ Perform routine inspections, maintenance, and testing after any severe electrical short circuit, ground fault, or environmental event (e.g., flooding) to determine the operational status of the transformer.
- ❑ Perform the inspections, maintenance and testing if the transformer has been out of service for an extended period of time. Place strip heaters to maintain the transformer temperature above ambient to prevent condensation from forming in the transformer during extended down time.

Cleaning

Connections and Contact Surfaces

A clean contact surface area is necessary, and terminals must be clean. Where the transformers are installed indoors or outdoors or in a harsh environment, the connections must be sealed with an approved electrical joint compound.

Apply the compound to exposed connections and the surface area before making a bolted connection.

Enclosures, Windings and Insulators

1. De-energize the transformer.
2. Follow the check list below to permit free circulation of air and to guard against insulation breakdowns and thermal performance issues:

- ❑ Clean the transformer enclosure, windings and insulators by vacuuming or by blowing clean, dry, compressed air or nitrogen. Be sure to wear appropriate personal protective equipment (PPE) when cleaning.

  NOTE: Vacuuming is the preferred first step for cleaning. Compressed air should have a dew point of -50°F (-45.5°C) or less, and a pressure at or below 25 psi.
- ❑ Clean lead supports, tap changers, terminals boards, bushings and other major insulating surfaces with lint-free rags or soft bristle brushes.

  NOTE: Do not use liquids, solvents or detergents, as they may deteriorate insulating materials.
- ❑ Carefully inspect and thoroughly clean the ventilation openings (ducts) and winding assemblies. Remove any blockages.
- ❑ Remove any trash and/or combustible materials from the area around the unit.

Performing Electrical Testing

⚠ DANGER

HAZARD OF ELECTRIC SHOCK, EXPLOSION, OR ARC FLASH

- Only qualified personnel should clean, inspect maintain and test transformers.
- Turn off power supplying this equipment before working on it.
- Disconnect and electrically isolate power to the transformer so that no accidental contact can be made with energized parts.
- Discharge all static charges held by coils.

Failure to follow these instructions will result in death or serious injury.

Perform the following electrical tests during maintenance:

© 1992–2018 Schneider Electric All Rights Reserved

- ❑ Check all electrical contacts with a calibrated torque wrench.
- ❑ Verify proper spacing.
- ❑ Refer to the manufacturer's specifications for torque values.
- ❑ Check all external hardware for tightness.

Contact Resistance

- ❑ Use a low resistance ohmmeter to measure contact resistance.
  a. Compare values with similar connections looking for unusually high contact resistance points.
  b. Investigate any connections that may deviate from common values by more than 50% of the lowest values.
- ❑ An infrared scanning device may be used to look for abnormal temperatures at transformer contacts for energized units.

  NOTE: Take care to follow the manufacturer's procedures, as small errors in scanner operation can cause significant errors in detected temperatures.

Insulation Resistance

Insulation resistance checks may create a capacitive charge on a winding.

1. Ground each winding for at least one minute between tests to drain any static charge created during the test.
2. Perform insulation resistance tests with an appropriate device.
3. Test from winding-to-winding and winding-to-ground.
4. Record all test results for comparison for future readings.
   — Values are installation site dependent and not pre-set at the factory. All testing is compliant to NEMA ST-20.
   — Insulation resistance readings should be at least 1 megohm.
   — Lower readings may indicate the presence of moisture and require a drying procedure to correct.

Winding Resistance

On larger transformers (>500 kVA):

1. Measure the winding resistances and record for future reference.
2. Compare the results with the values obtained during the pre-commissioning checks. Readings should not vary by more than 5% with adjacent coils and the pre-commissioning checks.
3. Record the temperature at which these initial readings were taken.
   — Values are installation site dependent and not pre-set at the factory. All testing is compliant to NEMA ST-20.
4. Adjust the resistance values based on any differences in temperature between current readings and pre-commissioning values.

Grounding and Bonding

1. Check for proper values of resistance between the system ground lug (or point) and the transformer enclosure, core, frame and clamps.
2. Compare with pre-commissioning values, looking for trends that may indicate a compromise in the quality of the ground bond.

Turns Ratio

1. Perform a turns ratio test on all taps and on the full winding voltages for each phase. Significant changes may indicate a loss of winding continuity.
   a. Compare these values with those obtained during the pre-commissioning checks. Voltages between phases should not deviate by more than 0.5% from adjacent coils.
   b. Investigate abnormal readings found outside of this limit.
2. Verify input and output voltages are correct for the tap and output voltages expected. Investigate abnormal readings.

© 1992–2018 Schneider Electric All Rights Reserved

Sound Isolation Pads

Inspect the sound isolation pads for signs of physical deterioration.

Coil Cooling Ducts

1. Inspect all coil cooling ducts for any accumulation of dust, dirt or other obstructions.
2. Follow standard cleaning procedures to ensure proper air flow.

Terminals

Ensure terminals are in good working condition for the proper operation of transformers.

- ❑ Inspect terminals for alignment, tightness (see torque requirements), pressure, burns or corrosion. Investigate and correct any signs of damage.
- ❑ Repair minor pitting, as long as the plating on the terminal has not been compromised.

© 1992–2018 Schneider Electric All Rights Reserved

ENGLISH

Section 7—Replacement Parts and Accessories

See Figures 34 and 35 for transformer covers (top, rear and front) and side panels (left and right), and Figure 21 on page 21 and Figure 22 on page 22 for mounting brackets (wall and ceiling). Refer to Table 4 on page 43 for a listing of replacement and accessory parts.

Figure 34: Exploded Assembly for EX75T3H Energy Efficient Transformer with Enclosure Style 20K Front

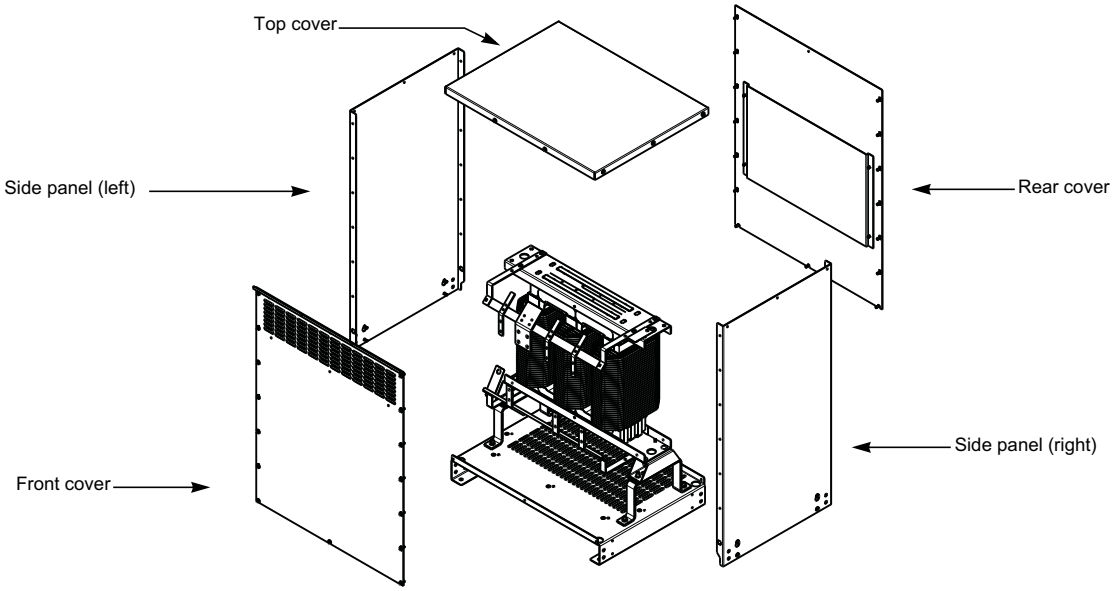

© 1992–2018 Schneider Electric All Rights Reserved

ENGLISH

Figure 35: Exploded Assembly for EX300T3H Energy Efficient Transformer with Enclosure Style 25J Front

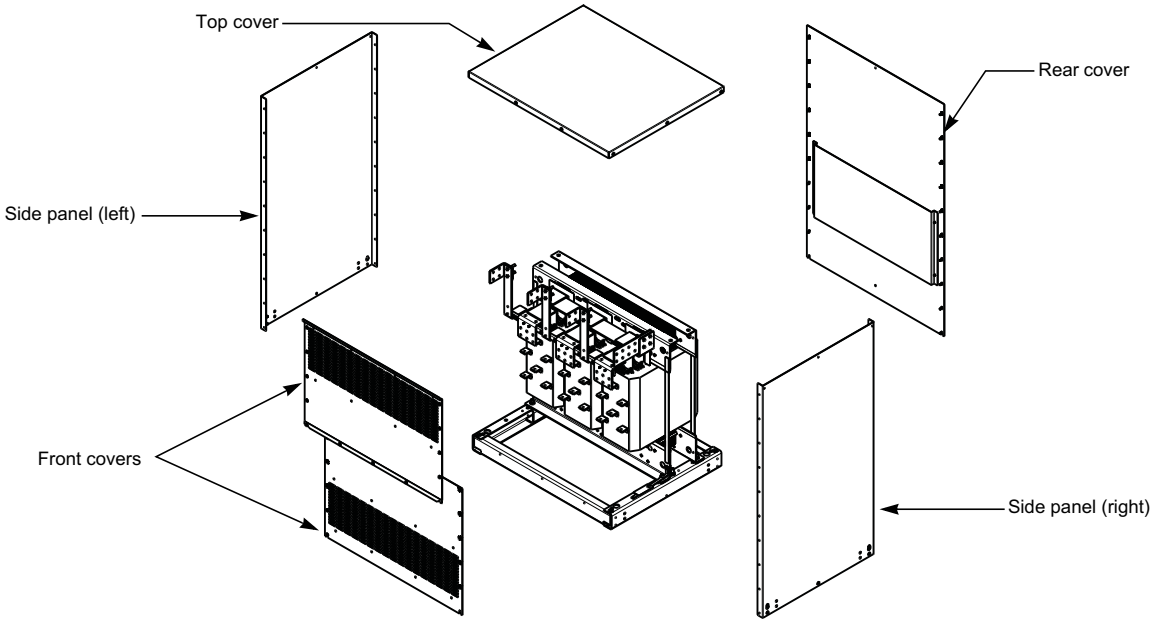

© 1992–2018 Schneider Electric All Rights Reserved

ENGLISH

Refer to the Schneider Electric *Digest, Section 14,* Transformers or call 1-888-Square D (1-888-778-2733) to order replacement parts and accessories.

Refer to Table 4 for enclosure types (top, rear and front covers) side panels, weather-shields and mounting brackets (wall and ceiling).

Table 4: Covers, Side Panels, Weather Shields and Mounting Brackets

Enclosure	Top Cover	Rear Cover	Front Cover	Side Panel (Left and Right)	Weather-shield	Wall Mounting Bracket	Ceiling Mounting Bracket
	Catalog Number						
17D	4310191501	4310191601	4310191601	4310191701	WS363	WMB361362	CMB363
17E	4310191501	—	—	4310191701	—	WMB361362	CMB363
17H	4310191501	4305502003	4305502003	4310191702	WS363	WMB361362	CMB363
17K	7400TC17K	7400R17K	7400FNP17K	7400LR17K	7400WS17K	7400WMB17K	7400CMB17K
18D	4305502101	4305502001	4305502001	4305501001	WS363	WMB363364	CMB363
18E	4305502101	—	—	4305501001	—	WMB363364	CMB363
18H	4305502101	4305502003	4305502003	4310179701	WS363	WMB363364	CMB363
18K	7400TC18K	7400R18K	7400FNP18K	7400LR18K	7400WS18K	7400WMB18K	7400CMB18K
19D	4305501201	4305501101	4305501101	4305501001	WS364	WMB363364	CMB364
19E	—	—	—	—	—	—	—
19K	7400TC19K	7400R19K	7400FNP19K	7400LR19K	7400WS19K	7400WMB19K	7400CMB19K
20D	4305501201	4310192201	4310192201	4310179701	WS364	WMB363364	CMB364
20E	4305501201	—	—	4310179701	—	—	—
20K	7400TC20K	7400R20K	7400FNP20K	7400LR20K	7400WS20K	7400WMB20K	7400CMB20K
21D	4305512501	4300507404	4300507404	4305512601	WS364	—	CMB364
21E	4305512501	—	—	4305512601	—	—	CMB364
21K	7400TC21K	7400R21K	7400FNP21K	7400LR21K	7400WS21K	—	7400CMB21K
22D	4310189001	4310189102	4310189102	4310189201	WS380	—	CMB380
22E	4310189001	—	—	4310189201	—	—	CMB380
22K	7400TC22K	7400R22K	7400FNP22K	7400LR22K	7400WS22K	—	7400CMB22K
23E	—	—	—	—	—	—	—
24D	4310190701	4310190802	4310190802	4310190901	WS381	—	CMB381
24E	4310190701	—	—	4310190901	—	—	CMB381
24K	7400TC24K	7400R24K	7400FNP24K	7400LR24K	7400WS24K	—	7400CMB24K
25D	4310189901	4310190001	4310190001	4310190101	WS382	—	—
25E	4310189901	—	—	4310190101	—	—	—
25J	7400TC25J	7400R25J	7400FNP25J	7400LR25J	7400WS25J	—	—
26D	—	—	—	—	—	—	—
28D	—	—	—	—	—	—	—
28E	—	—	—	—	—	—	—
29D	—	—	—	—	—	—	—
30D	4310192601	(U)4310192901 (L)4310193001	(U)4310192901 (L)4310193001	4310192801	WS383	—	—
30E	4310192601	—	—	—	—	—	—
30J	7400TC30J	7400RU30J 7400RL30J	7400FU30J 7400FLNP30J	7400LR30J	7400WS30J	—	—
31D	—	—	—	—	—	—	—
31E	—	—	—	—	—	—	—
31J	7400TC31J	7400RU31J 7400RL31J	7400FU31J 7400FLNP31J	7400LR31J	7400WS31J	—	—

Touch-up Paint: Catalog Number PK49SP

© 1992–2018 Schneider Electric All Rights Reserved

ENGLISH

Refer to Table 5 for available transformer lug kits. For additional information regarding terminal connectors, refer to the label on the reverse side of the transformer front panel. See Figure 36.

Table 5: VERSAtile™ Compression Lugs and Mechanical Set-Screw Types—UL Listed Lugs AL9CU

Transformer kVA Sizes	Kit Catalog Number	Terminal Lugs		Aluminum or Copper Conductor Range (AWG or kcmil)	Hardware Included	
		Qty.	Catalog Number		Qty.	Cap Screws
VERSAtile Compression Equipment Lugs						
15–37 1/2 1Ø	VCELSK1	8	VCEL02114S1	#8–1/0	8	1/4 in. x 1 in.
15–45 3Ø		5	VCEL030516H1	#4–300 kcmil	1	1/4 in. x 2 in.
50–75 1Ø	VCELSK2	13	VCEL030516H1	#4–300 kcmil	8	1/4 in. x 1 in.
75–112 1/2 3Ø					8	1/4 in. x 2 in.
100–167 1Ø 150–300 3Ø	VCELSK3	3 26	VCEL030516H1	#4–300 kcmil	3	1/4 in. x 3/4 in.
			VCEL07512H1	#500–750 kcmil Al #500 kcmil Cu	16	3/8 in. x 2 in.
500 3Ø	VCELSK4	34	VCEL07512H1	#500–750 kcmil Al #500 kcmil Cu	21	3/8 in. x 2 in.

NOTE: Refer to UL 486A for torque values to be used with lug connection hardware.

Two nameplates are attached to each unit. See Figure 36. One on the front cover which is required by standards, the second nameplate is attached to the core and coil, providing installation information inside the unit. The second nameplate also carries a UR listing for the core and coil, allowing the enclosure to be removed and the device installed in the equipment.

Figure 36: Sample Nameplates

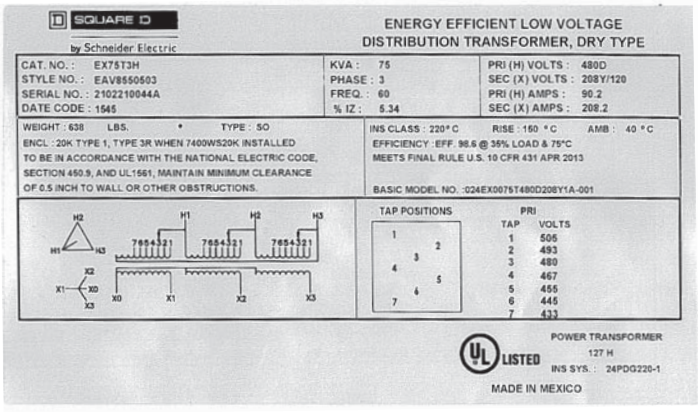

Attached to the Front Cover

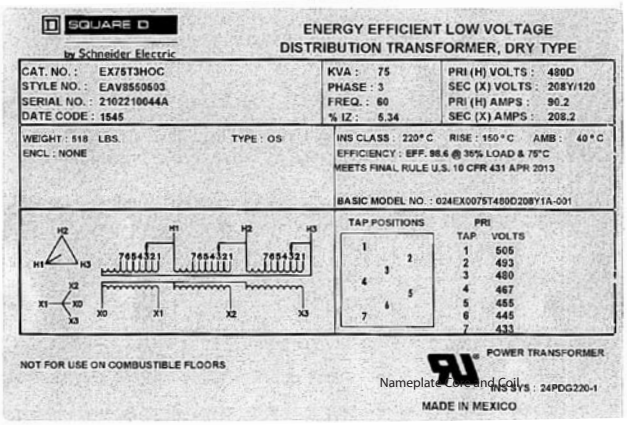

Nameplate Core and Coil

Attached to the Core and Coil

© 1992–2018 Schneider Electric All Rights Reserved

ENGLISH

Refer to Table 6 for Square D lug kits for the following dry-type transformers:

- Single-phase primary, single-phase secondary, three-phase Delta primary, three-phase secondary
- Single-phase primary and secondary, three-phase Wye secondary, three-phase Delta with center tap

Table 6: Square D Lug Kits for Dry-type Transformers

Catalog Number	Lugs per Kit	Wire Range	Cap Screws	Current Range	Grounding Lugs per Kit	Wire Range	Bonding Lugs per Kit	Wire Range
Single-phase Primary, Single-phase Secondary, Three-phase Delta Primary, Three-phase Secondary								
DASKP100	3	1/0–14 STR.	1/4 in. x 1 in.	Up to 100 A	Not Applicable	Not Applicable	Not Applicable	Not Applicable
DASKP250	3	350 kcmil–6 STR.	3/8 in. x 2 in.	101–250 A				
DASKP400	3	600 kcmil–4 STR. (2) 250 kcmil–1/0 STR.	3/8 in. x 2 in.	201–400 A				
DASKP600	6	600 kcmil–4 STR. (2) 250 kcmil–1/0 STR.	3/8 in. x 2 in.	601–800 A				
DASKP1000	9	600 kcmil–2 STR.	3/8 in. x 2 in.	601–800 A				
DASKP1200	12	600 kcmil–2 STR.	3/8 in. x 2 in.	801–1200 A				
Single-phase Primary and Secondary, Three-phase Wye Secondary, Three-phase Delta with Center Tap								
DASKGS100	5	1/0–14 STR.	1/4 in. x 1 in.	Up to 100 A	1	(4) 2/0–14 STR.	1	2–14 STR.
DASKGS250	5	350 kcmil–6 STR.	3/8 in. x 2 in.	101–250 A	1	(4) 2/0–14 STR.	1	2–14 STR.
DASKGS400	5	600 kcmil–4 STR. (2) 250 kcmil–1/0 STR.	3/8 in. x 2 in.	201–400 A	1	(4) 2/0–14 STR.	1	1/0–14 STR.
DASKGS600	10	600 kcmil–4 STR. (2) 250 kcmil–1/0 STR.	3/8 in. x 2 in.	601–800 A	1	(4) 350 kcmil–6 STR.	1	250 kcmil–6 STR.
DASKGS1000	15	600 kcmil–2 STR.	3/8 in. x 2 in.	601–800 A	1	(4) 350 kcmil–6 STR.	1	250 kcmil–6 STR.
DASKGS1200	20	600 kcmil–2 STR.	3/8 in. x 2 in.	801–1200 A	1	(4) 350 kcmil–6 STR.	1	250 kcmil–6 STR.
DASKGS2000	25	600 kcmil–2 STR.	3/8 in. x 2 in.	1201–2000 A	1	(4) 350 kcmil–6 STR.	1	250 kcmil–6 STR.

NOTE: Lugs are not supplied with transformer units. They must be purchased separately.

Refer to UL 486A for torque values to be used with lug connection hardware.

© 1992–2018 Schneider Electric All Rights Reserved

ENGLISH

Refer to Table 7 for terminal mechanical and compression lugs and their appropriate wire ranges for dry-type transformers.

NOTE: All terminals allow for NEMA two-hole lugs.

Table 7: Terminal Sizes, Mechanical and Compression Lugs and Wire Ranges

kVA	300 Volts and Above		Below 300 Volts	
	Terminal Mechanical Lugs	Terminal Compression Lugs	Terminal Mechanical Lugs	Terminal Compression Lugs
15	2/0–14 AWG	(1) #12–10 AWG (1) #8–#1/0 AWG	2/0–14 AWG	(1) #8-#1/0 AWG
30	2/0–14 AWG	(1) #8–#1/0 AWG	350 kcmil–6 AWG	(1) #8-#1/0 AWG (1) #4-300 kcmil (1) 250–350 kcmil
45	2/0–14 AWG 350 kcmil–6 AWG	(1) #8–#1/0 AWG (1) #4–300 kcmil	350 kcmil–6 AWG (1) 600 kcmil–4 AWG or (2) Equal 250 kcmil–1/0 AWG	(1) 250–350kcmil (1) #2/0-500 kcmil (2) #4-300 kcmil
75	2/0–14 AWG 350 kcmil–6 AWG	(1) #8–#1/0 AWG (1) #4–300 kcmil (1) 250–350 kcmil	(1) 600 kcmil–4 AWG or (2) Equal 250 kcmil–1/0 AWG	(2) #2/0–500 kcmil (1) 400–600 kcmil Al (2) #4-300 kcmil (2) 250–350 kcmil
112.5	350 kcmil–6 AWG (1) 600 kcmil–4 AWG or (2) Equal 250 kcmil–1/0 AWG	(1) 250 kcmil–350 kcmil (1) #2/0–500 kcmil (2) #4-300 kcmil	(2) 350 kcmil–6 AWG (2) 600 kcmil–2 AWG	(3) 250–350 kcmil (3) #4–300 kcmil (2) 400–600 kcmil Al
150	(1) 600 kcmil–4 AWG or (2) Equal 250 kcmil–1/0 AWG	(1) 250–350 kcmil (2) #4-300 kcmil	(3) 350 kcmil–6 AWG (2) 600 kcmil–2 AWG	(3) #2/0–500 kcmil (3) #4–300 kcmil (3) 400–600 kcmil Al (4) 250–350 kcmil
225	1) 600 kcmil–2 AWG (2) 600 kcmil–2 AWG	(2) #2/0–500 kcmil (2) 400–600 kcmil Al (2) #4–300 kcmil	(3) 600 kcmil–2 AWG	(4) #4–300 kcmil (4) #2/0–500 kcmil
300	(2) 600 kcmil–2 AWG	(3) 250–350 kcmil (3) #2/0–500 kcmil (3) 400–600 kcmil Al	(4) 600 kcmil–2 AWG	(6) #2/0–500 kcmil (6) 400–600 kcmil Al
500	(3) 600 kcmil–2 AWG	(4) #4–300 kcmil (4) #2/0–500 kcmil	(6) 600 kcmil–2 AWG	(9) #2/0–500kcmil (9) 400–600 kcmil Al
750	(4) 600 kcmil–2 AWG	(6) #2/0–500 kcmil (6) 400–600 kcmil Al	(9) 600 kcmil–2 AWG	(15) #2/0–500 kcmil (15) 400–600 kcmil Al

NOTE: All terminals allow for NEMA two-hole lugs.

Refer to Table 8 for Square D ground bar kits.

Table 8: Square D Ground Bar Kits

Catalog Number	Grounding Lugs per Kit	Wire Range
DASKGTB100400	1	(4) 2/0–14 STR.
DASKGTB6002000	1	(4) 350 KCMIL–6 STR.

© 1992–2018 Schneider Electric All Rights Reserved

ENGLISH

Schneider Electric
800 Federal Street
Andover, MA 01810 USA
1-888-778-2733
www.schneider-electric.us

Electrical equipment should be installed, operated, serviced, and maintained only by qualified personnel. No responsibility is assumed by Schneider Electric for any consequences arising out of the use of this material.

© 1992–2015 Schneider Electric All Rights Reserved
Schneider Electric and Square D are trademarks owned by Schneider Electric Industries SAS or its affiliated companies. All other trademarks are the property of their respective owners.

43006-850-01 Rev. 03, 07/2018
Replaces 43006-850-01 Rev 02, 11/2015

Transformadores tipo seco
1 000 V y tensiones inferiores
Clase 7400

Boletín de instrucciones

43006-850-01
Rev. 03, 07/2018

Conservar para uso futuro.

ESPAÑOL

SQUARE D™
by Schneider Electric

Categorías de riesgos y símbolos especiales

Asegúrese de leer detenidamente estas instrucciones y realice una inspección visual del equipo para familiarizarse con él antes de instalarlo, hacerlo funcionar o prestarle servicio de mantenimiento. Los siguientes mensajes especiales pueden aparecer en este boletín o en el equipo para advertirle sobre peligros o llamar su atención sobre cierta información que clarifica o simplifica un procedimiento.

La adición de cualquiera de estos símbolos a una etiqueta de seguridad de "Peligro" o "Advertencia" indica la existencia de un peligro eléctrico que podrá causar lesiones personales si no se observan las instrucciones.

Este es el símbolo de alerta de seguridad. Se usa para avisar sobre peligros de lesiones personales. Respete todos los mensajes de seguridad con este símbolo para evitar posibles lesiones o la muerte.

⚠ PELIGRO

PELIGRO indica una situación de peligro inminente que, si no se evita, **podrá** causar la muerte o lesiones serias.

⚠ ADVERTENCIA

ADVERTENCIA indica una situación potencialmente peligrosa que, si no se evita, **puede** causar la muerte o lesiones serias.

⚠ PRECAUCIÓN

PRECAUCIÓN indica una situación potencialmente peligrosa que, si no se evita, **puede** causar lesiones menores o moderadas.

AVISO

AVISO se usa para hacer notar prácticas no relacionadas con lesiones físicas. El símbolo de alerta de seguridad no se usa con esta palabra de indicación.

NOTA: Proporciona información adicional para clarificar o simplificar un procedimiento.

Observe que

Solamente el personal calificado deberá instalar, hacer funcionar y prestar servicios de mantenimiento al equipo eléctrico. Schneider Electric no asume responsabilidad alguna por las consecuencias emergentes de la utilización de este material.

Contenido

SECCIÓN 1: INTRODUCCIÓN 7

SECCIÓN 2: PRECAUCIONES DE SEGURIDAD 9

Códigos y normas 9
Declaración de ausencia de responsabilidad 10

SECCIÓN 3: RECIBO, MANEJO Y ALMACENAMIENTO 11

Recibo 11
Manejo 11
Manejo con plataformas rodantes o elevadores de plataformas, patines hidráulicos o montacargas 12
Manejo con grúas: Utilizando cables, cadenas o correas 12
Manejo de gabinetes estilos D, H y K, después de extraer la plataforma de transporte 16
Almacenamiento 17

SECCIÓN 4: INSTALACIÓN 19

Ubicación/colocación de los transformadores con o sin ventilación 19
Todos los estilos de gabinetes (D, E, F, H, K y J) 22
Puesta a tierra 26
Clasificación sísmica 27
Control de vibración/ruido 27
Gabinete estilo K 28
Gabinetes estilos D, E, H y J 28
Conexiones eléctricas 29
Pruebas y controles previos a la puesta en servicio / energización 33
Limpieza 33
Controles visuales y mecánicos 33
Pruebas eléctricas 34

SECCIÓN 5: FUNCIONAMIENTO 35

Efectos de la humedad 35
Temperatura del gabinete 36
Antes de energizar los transformadores 36
Energización del transformador 36

SECCIÓN 6: SERVICIO DE MANTENIMIENTO 39

Controles visuales y mecánicos 39
Frecuencia 39
Eventos severos, ambientales o especiales 40
Limpieza 40
Conexiones y superficies de contacto 40
Gabinetes, devanados y aisladores 40
Pruebas eléctricas 41
Resistencia de los contactos 41
Resistencia del aislamiento 41
Resistencia del devanado 42
Unión y puesta a tierra 42
Razón de vueltas 42
Cojinetes aisladores de ruido 42
Conductos de enfriamiento de bobinas 42
Terminales 42

SECCIÓN 7: ACCESORIOS Y PIEZAS DE REPUESTO 43

ESPAÑOL

© 1992–2018 Schneider Electric Reservados todos los derechos

ESPAÑOL

© 1992–2018 Schneider Electric Reservados todos los derechos

Lista de figuras

Figura 1: Transformadores de eficiencia energética 2016 (EX) 7
Figura 2: Transformadores de eficiencia energética 2016 (EX) 7
Figura 3: Bobina y núcleo abierto 8
Figura 4: Transformador con ventilación de eficiente energética (EE) 8
Figura 5: No lineal (NL, NP, NLP) y mitigación de armónicos (HM) 8
Figura 6: Transformador sin ventilación 8
Figura 7: Manejo con un montacargas: Palas/horquillas bajo el transformador completo (con plataforma de transporte) 12
Figura 8: Elevación en dos puntos de sujeción: Ángulos de tracción de los cables (no menos de 60 grados respecto a la horizontal) 13
Figura 9: Elevación en dos puntos de sujeción: Manejo con cadenas y ganchos en esquinas cruzadas (no menos de 60 grados respecto a la horizontal) 14
Figura 10: Elevación en cuatro puntos de sujeción: Manejo con cadenas y ganchos en cuatro esquinas (no menos de 60 grados respecto a la horizontal) 15
Figura 11: Elevación en cuatro puntos de sujeción: Manejo con una correa y ganchos (no menos de 60 grados respecto a la horizontal) 16
Figura 12: Manejo con un patín hidráulico: Gabinetes estilos D, E, H y K, después de extraer la plataforma de transporte 16
Figura 13: Ejemplo de la placa de datos 19
Figura 14: Distancia mínima marcada en la placa de datos (NEC 450.9) 20
Figura 15: Montaje: Gabinetes estilos D, H, K y E 20
Figura 16: Gabinetes D, H, K y E 20
Figura 17: Montaje del gabinete estilo J: Con ventilación 21
Figura 18: Soporte de montaje en piso: Gabinete estilo K 21
Figura 19: Soporte de montaje en piso: Gabinete estilo K 21
Figura 20: Transformadores instalados en interiores: NEC 450.21, excepciones A o B en el ejemplo de la placa de datos 22
Figura 21: Transformador montado en pared 23
Figura 22: Transformador montado en trapecio (techo) 24
Figura 23: Kits para gabinete tipo 3R 25
Figura 24: Barra de terminales de tierra con cuatro conductores 26
Figura 25: Etiqueta con la instrucción para aflojar la tuerca una vuelta completa (cuatro ubicaciones) 27
Figura 26: Flotando el transformador en los cojinetes aislantes/amortiguadores de ruido 27
Figura 27: Gabinete estilo K: Tornillos accesibles desde la parte delantera del transformador 28
Figura 28: Punto de acceso: Gabinetes estilos D, E, H y K 29
Figura 29: Punto de acceso: Gabinete estilo J 30

ESPAÑOL

© 1992–2018 Schneider Electric Reservados todos los derechos

Figura 30: Etiqueta que muestra la ubicación superior en los gabinetes (puntos de acceso por debajo de la tarjeta de terminales superior) 30
Figura 31: Diagrama de fases, ubicación de las derivaciones y tensión nominal marcada en la placa de datos 31
Figura 32: Etiqueta de precaución para los transformadores conectados en delta-estrella o estrella-delta 32
Figura 33: Desmontaje de los soportes temporales 36
Figura 34: Detalles del ensamble para el transformador de eficiente energética EX75T3H con cubierta frontal de gabinete estilo 20K 43
Figura 35: Detalles del ensamble para el transformador de eficiente energética EX300T3H con cubierta frontal de gabinete estilo 25J 43
Figura 36: Ejemplo de placa de datos 45

ESPAÑOL

Lista de tablas

Tabla 1: Espacio libre en el gabinete 22
Tabla 2: Conversión de montaje en piso a montaje en pared (utilizando kits de fábrica) 23
Tabla 3: Conversión de montaje en piso a trapezoidal (techo) (utilizando kits de fábrica) 24
Tabla 4: Cubiertas, paneles laterales, protecciones para intemperie y soportes de montaje 44
Tabla 5: Zapatas de compresión VERSAtile™ y tornillo de sujeción mecánica —zapatas AL9CU recomendadas por UL..... 45
Tabla 6: Kits de zapatas marca Square D para transformadores tipo seco..... 46
Tabla 7: Tamaños de zapatas terminales mecánicas y de compresión, y tamaño de conductor 47
Tabla 8: Kits de barras de tierra marca Square D..... 47

© 1992–2018 Schneider Electric Reservados todos los derechos

Sección 1—Introducción

Este boletín de instrucciones proporciona las instrucciones de instalación, funcionamiento y servicio de mantenimiento de los transformadores tipo seco de 1 000 V y tensiones inferiores para su uso en aplicaciones comerciales e industriales.

NOTA: Este boletín debe ser utilizado sólo por personal calificado.

En este boletín de instrucciones se incluyen las siguientes familias de productos de transformadores tipo seco. Transformadores típicos se muestran en las figuras 1 a 6.

- Transformadores de distribución de baja tensión, de tres fases y una fase
  - — Uso general: 50 y 60 Hz
  - — Eficiencia energética (EE): 60 Hz
  - — Eficiencia energética 2016 (EX): 60 Hz
  - — Oferta no lineal (NL, NP o NLP): 50 y 60 Hz
  - — Transformadores de mitigación de armónicos (HM): 50 y 60 Hz
  - — Bobina y núcleo abierto (OC)
- Transformadores de aislamiento de variadores (DIT)
- Transformadores sin ventilación (NV)

Figura 1: Transformadores de eficiencia energética 2016 (EX)

Figura 2: Transformadores de eficiencia energética 2016 (EX)

© 1992–2018 Schneider Electric Reservados todos los derechos

ESPAÑOL

Figura 3: Bobina y núcleo abierto

Figura 4: Transformador con ventilación de eficiente energética (EE)

Figura 5: No lineal (NL, NP, NLP) y mitigación de armónicos (HM)

Figura 6: Transformador sin ventilación

© 1992–2018 Schneider Electric Reservados todos los derechos

Sección 2—Precauciones de seguridad

⚠ PELIGRO

PELIGRO DE DESCARGA ELÉCTRICA, EXPLOSIÓN O DESTELLO POR ARQUEO

- Utilice equipo de protección personal (EPP) apropiado y siga las prácticas de seguridad en trabajos eléctricos establecidas por su Compañía, consulte la norma 70E de NFPA, Z462 de CSA o NOM-029-STPS-2011.
- Solamente el personal eléctrico calificado deberá instalar y prestar servicio de mantenimiento a este equipo.
- Asegúrese de leer y entender todas las instrucciones de este boletín antes de realizar cualquier trabajo en este equipo.
- Desenergice el equipo antes de realizar cualquier trabajo dentro o fuera de él.
- Siempre utilice un dispositivo detector de tensión nominal adecuado para confirmar la desenergización del equipo.
- Antes de realizar una inspección visual, pruebas o servicio de mantenimiento al equipo, desconecte todas las fuentes de alimentación eléctrica. Suponga que todos los circuitos están “vivos” hasta que hayan sido completamente desenergizados, probados y etiquetados. Preste particular atención al diseño del sistema de alimentación. Tome en consideración todas las fuentes de alimentación, incluyendo la posibilidad de retroalimentación.
- Siga todos los procedimientos de bloqueo y etiquetado de acuerdo con los requisitos de OSHA.
- Inspeccione detenidamente el área de trabajo y retire las herramientas u objetos que hayan quedado dentro del equipo.
- Vuelva a colocar todos los dispositivos, las puertas y las cubiertas antes de energizar este equipo.
- Todas las instrucciones de este manual fueron escritas suponiendo que el cliente ha adoptado estas medidas de precaución antes de prestar servicios de mantenimiento o realizar una prueba.

El incumplimiento de estas instrucciones podrá causar la muerte o lesiones serias.

ADVERTENCIA: Este producto puede exponerle a químicos incluyendo Fenil Glicidilo, que es conocido por el Estado de California como causante de cáncer. Para mayor información, visite www.P65Warnings.ca.gov.

ADVERTENCIA: Este producto puede exponerle a químicos incluyendo Metanol, que es conocido por el Estado de California como causante de defectos de nacimiento u otros problemas reproductivos. Para mayor información, visite www.P65Warnings.ca.gov.

Códigos y normas

Es responsabilidad de los usuarios de este documento emplear personal calificado y cumplir con los códigos eléctricos locales, estatales y federales durante la instalación de sistemas y productos eléctricos.

© 1992–2018 Schneider Electric Reservados todos los derechos

Este documento se adhiere a los códigos y normas descritos por la National Fire Protection Association® (asociación nacional de protección contra incendios, NFPA por sus siglas en inglés). Consulte la norma NFPA 70: Código eléctrico nacional edición 2014 (NEC®).

Declaración de ausencia de responsabilidad

Solamente el personal calificado deberá instalar, hacer funcionar y prestar servicios de mantenimiento al equipo eléctrico. Schneider Electric no asume responsabilidad alguna por las consecuencias emergentes de la utilización de este material.

© 1992–2018 Schneider Electric Reservados todos los derechos

Sección 3—Recibo, manejo y almacenamiento

Recibo

1. Al recibir el equipo, retire el embalaje.
   - — De inmediato realice una inspección al transformador nuevo para determinar si hay algún daño.
   - — Consulte Accesorios y piezas de repuesto en la página 43 para obtener información sobre piezas de repuesto, accesorios (por ejemplo, pintura) y refacciones para daños menores.
2. Revise la lista de embalaje y compruebe con la placa de datos del producto.
   - — Verifique que el pedido y el envío coincidan y que el envío esté completo.

   NOTA: Siga las condiciones de venta de Schneider Electric en caso de faltantes y errores.
3. Vuelva a empacar los transformadores para su almacenaje si no van a ser instalados de inmediato.
   - — Cubra todas las aberturas de ventilación para protegerlos contra la exposición a la humedad, polvo y contaminantes.
   - — Deje el material de embalaje intacto hasta que los transformadores estén listos para instalarse.
4. Consulte las "Condiciones de venta" para obtener detalles con respecto a reclamaciones por faltantes de equipo y otros errores. Póngase en contacto con su distribuidor local de Schneider Electric para obtener asistencia adicional.

Manejo

Maneje los transformadores con cuidado para evitar daños. Evite someter los transformadores a impacto, golpes, sacudidas y manejo rudo. Asegúrese que los transformadores sean transportados en posición vertical. Cuando sea posible, transporte los transformadores a su sitio de instalación cuando aún estén montados en sus plataformas de transporte.

Verifique que el peso del transformador no exceda la capacidad nominal del equipo de manejo que se va a utilizar.

© 1992–2018 Schneider Electric Reservados todos los derechos

ESPAÑOL

Manejo con plataformas rodantes o elevadores de plataformas, patines hidráulicos o montacargas

Debe tener mucho cuidado cuando mueva los transformadores desde su parte inferior. Vea la figura 7.

- Tenga cuidado y asegúrese de distribuir el peso al transportar los transformadores utilizando carros de plataformas rodantes, elevadores de plataformas, patines hidráulicos o montacargas.
- Utilice carritos o montacargas sólo cuando las palas u horquillas sean lo suficientemente largas para pasar totalmente bajo el gabinete del transformador o plataforma de transporte. Se prefiere una mayor separación entre las horquillas para distribuir el peso de la unidad de manera uniforme para aumentar la estabilidad.

Figura 7: Manejo con un montacargas: Palas/horquillas bajo el transformador completo (con plataforma de transporte)

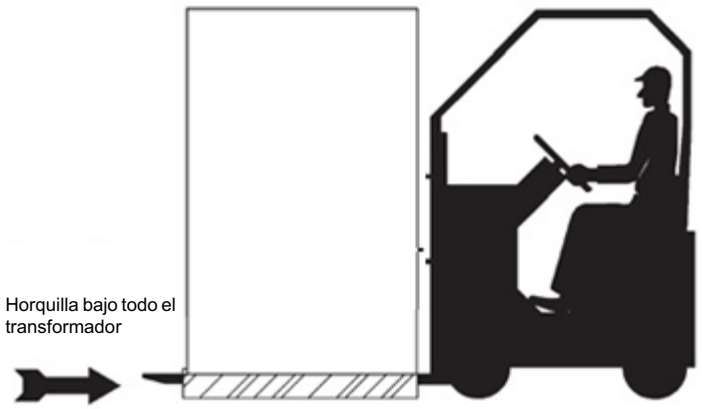

Manejo con grúas: Utilizando cables, cadenas o correas

Al levantar el transformador desde arriba, se permite el uso de barras separadoras con cables o cadenas. Esto ayudará a evitar daños al gabinete o equipo.

El gabinete puede ser desmontado para permitir que las unidades sean transportadas a través de aberturas pequeñas, levantándolas con los mismos medios de elevación que se muestran en la figura 8 en la página 13, figura 9 en la página 14 y figuras 10 y 11 en la página 16. Consulte las figuras 34 y 35 en Accesorios y piezas de repuesto en la página 43 para conocer detalles de las piezas y accesorios.

Asegúrese de que los ángulos de tracción de los cables de levantamiento no sean menos de 60 grados respecto a la horizontal. Vea la figura 8 en la página 13.

© 1992–2018 Schneider Electric Reservados todos los derechos

Figura 8: Elevación en dos puntos de sujeción: Ángulos de tracción de los cables (no menos de 60 grados respecto a la horizontal)

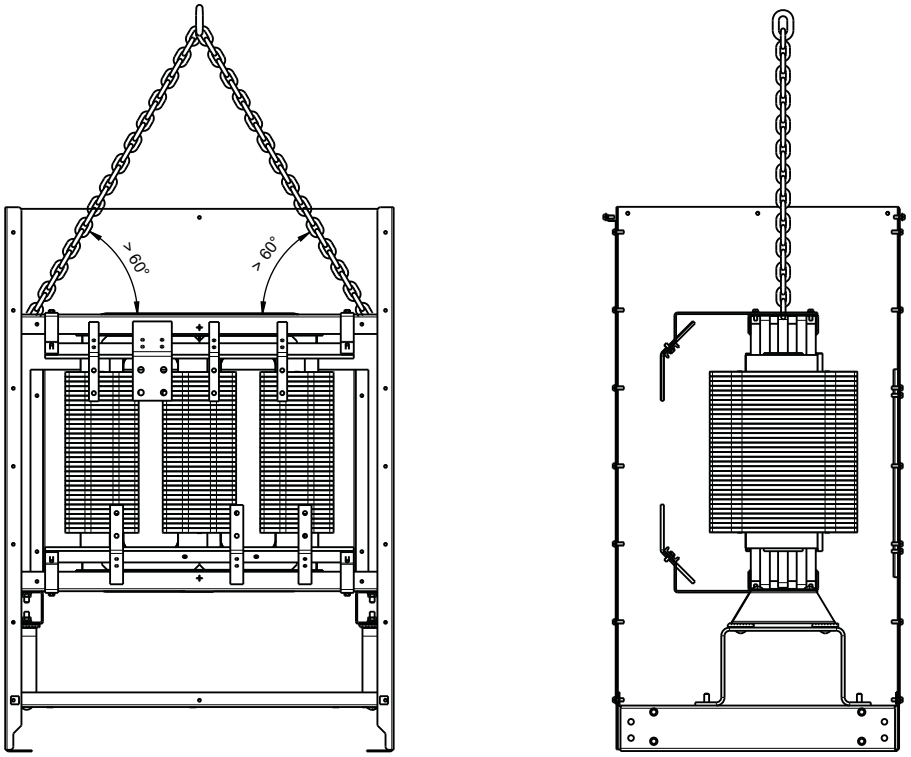

© 1992–2018 Schneider Electric Reservados todos los derechos

ESPAÑOL

Consulte las figuras 9 a 11 en las páginas 14 a 16 para conocer otras opciones de levantamiento y manejo permitidas.

Figura 9: Elevación en dos puntos de sujeción: Manejo con cadenas y ganchos en esquinas cruzadas (no menos de 60 grados respecto a la horizontal)

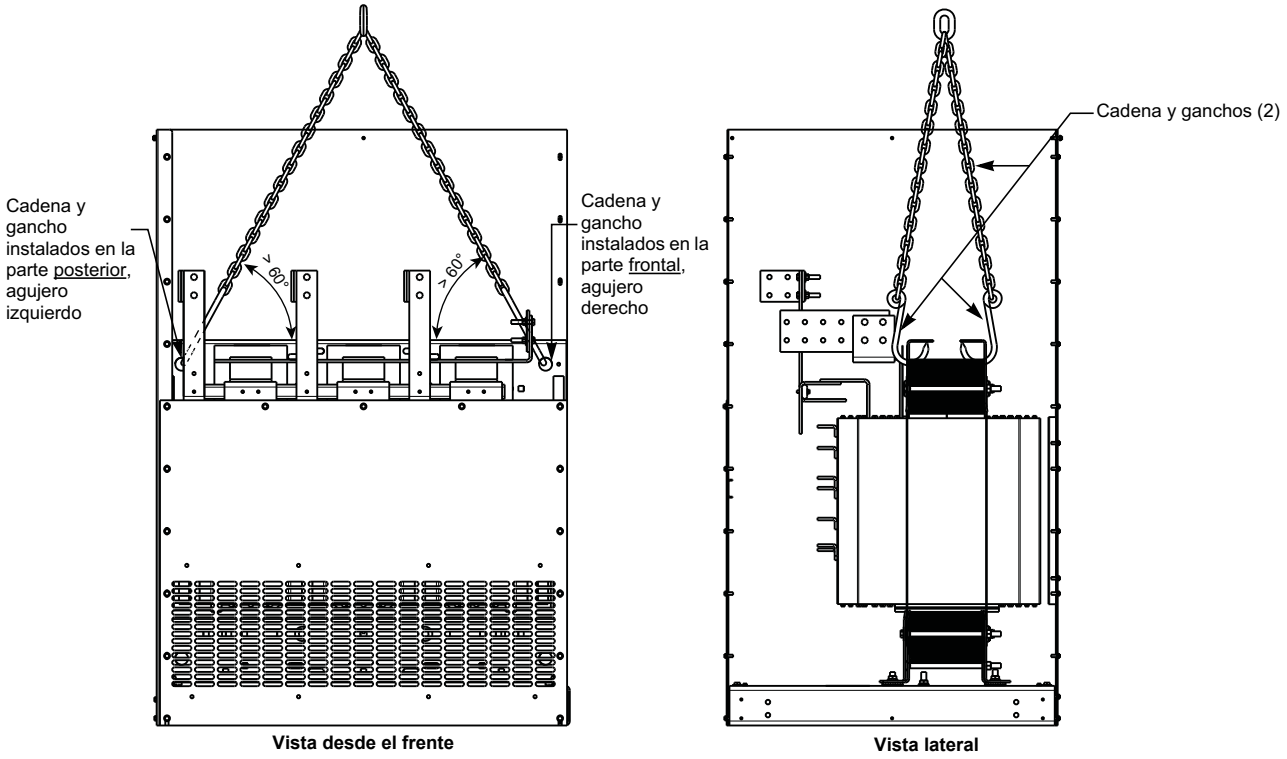

Elevación en dos puntos con cadenas y ganchos: Soporte de núcleo superior, lado derecho y agujero frontal. Soporte trasero, lado izquierdo y agujero trasero

© 1992–2018 Schneider Electric Reservados todos los derechos

Figura 10: Elevación en cuatro puntos de sujeción: Manejo con cadenas y ganchos en cuatro esquinas (no menos de 60 grados respecto a la horizontal)

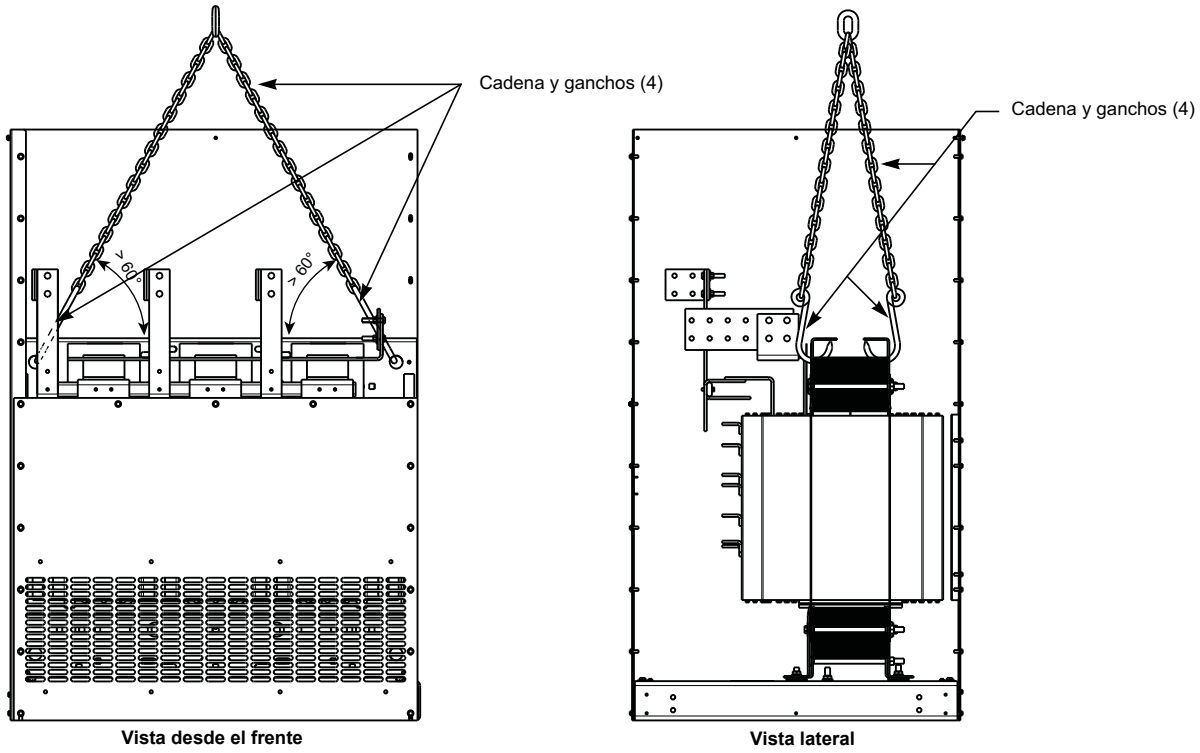

Vista desde el frente **Vista lateral**

Elevación en cuatro puntos de sujeción: Los ganchos se encuentran en los agujeros delanteros y traseros en el soporte del núcleo (4), con cadenas levantando en los ganchos.

ESPAÑOL

© 1992–2018 Schneider Electric Reservados todos los derechos

ESPAÑOL

Figura 11: Elevación en cuatro puntos de sujeción: Manejo con una correa y ganchos (no menos de 60 grados respecto a la horizontal)

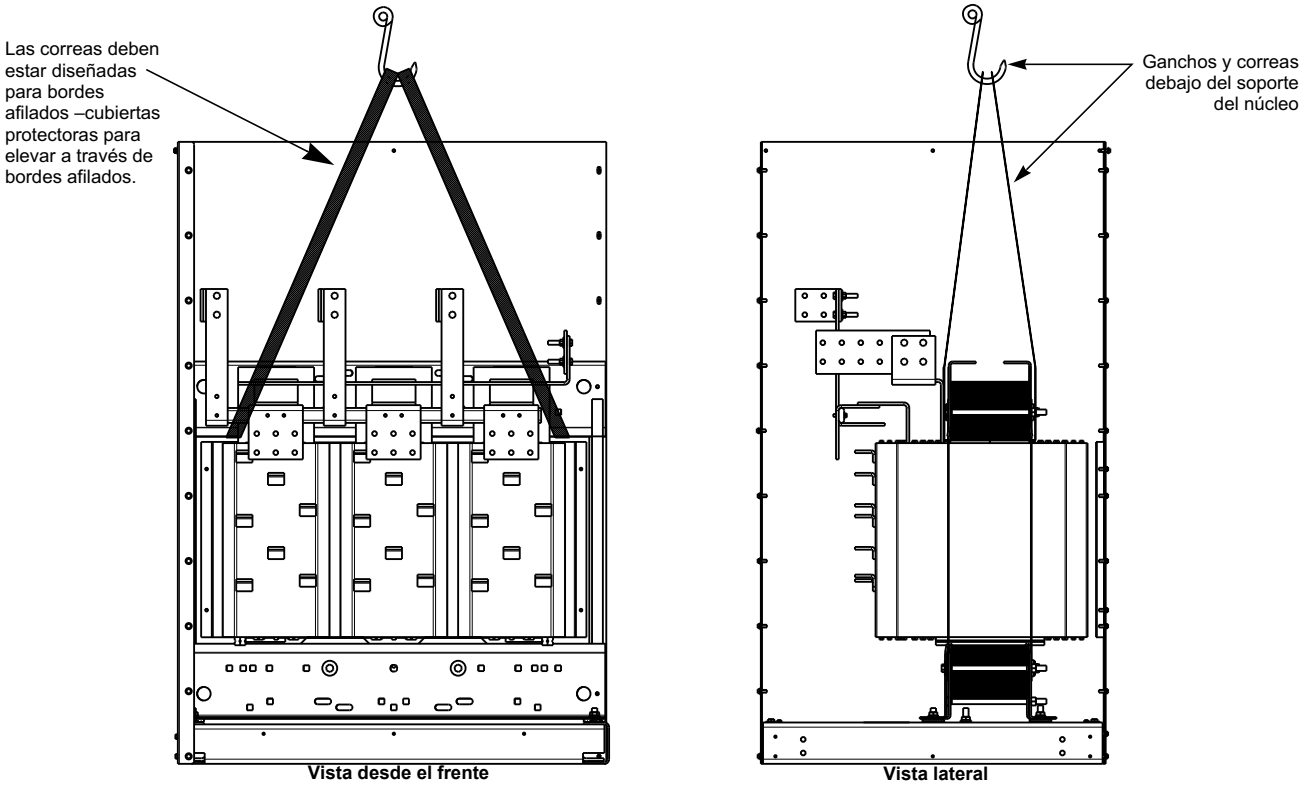

Elevación en cuatro puntos de sujeción: Las correas se encuentran debajo de los soportes de núcleo, con las correas juntas en la parte superior con un gancho. Utilice correas con cubiertas protectoras, los bordes de las abrazaderas de núcleo están afilados.

Manejo de gabinetes estilos D, H y K, después de extraer la plataforma de transporte

Los carritos y montacargas pueden acceder y mover el transformador a través de las aberturas en la parte delantera y trasera, por debajo, en la parte inferior de la base. Vea la figura 12. Siga las mismas instrucciones de manejo (que comienzan en la página 12) como si la plataforma de transporte aún estuviese colocada.

Figura 12: Manejo con un patín hidráulico: Gabinetes estilos D, E, H y K, después de extraer la plataforma de transporte

© 1992–2018 Schneider Electric Reservados todos los derechos

Almacenamiento

Deje el material de embalaje que mantiene al transformador en su lugar hasta que la unidad esté preparada para su colocación definitiva y conexión. Esto ayudará a proteger el gabinete del transformador y las piezas internas de la suciedad, el agua, la contaminación por humedad y daños físicos durante el almacenamiento. Proporcione medidas adicionales para proteger el transformador cuando el material de embalaje original no puede retenerse.

Almacene los transformadores en interiores en una zona limpia, seca y climatizada con temperaturas uniformes y circulación de aire adecuada. Si es necesario, instale calefacción eléctrica para mantener una temperatura uniforme por encima de la temperatura ambiente para evitar condensación.

Proteja los transformadores de las inclemencias del clima y la contaminación, cuando no es posible almacenar los transformadores en interiores.

Antes de energizar el transformador complete los pasos en Pruebas y controles previos a la puesta en servicio / energización además de los siguientes pasos:

1. Pruebe la resistencia del aislamiento si el almacenamiento en un entorno controlado no es factible. Consulte Resistencia del aislamiento en la página 41.
2. Seque la unidad si los niveles de prueba son inaceptables:
   a. Utilice dos calentadores o lámparas por bobina en 120 V, 50 W para aplicar calor exterior a las bobinas.
   b. Monte el calentador o lámpara directamente debajo de las bobinas situadas en la parte delantera y trasera del núcleo.

NOTA: Los transformadores para exteriores no son resistentes a la intemperie sino hasta que estén correcta y completamente instalados y energizados. Trate a los transformadores para exteriores exactamente de la misma manera que los transformadores para interiores hasta después de que se hayan instalado.

© 1992–2018 Schneider Electric Reservados todos los derechos

© 1992–2018 Schneider Electric Reservados todos los derechos

Sección 4—Instalación

Ubicación/colocación de los transformadores con o sin ventilación

1. Retire todo el material de embalaje. Conserve la plataforma de transporte que viene con el transformador para ayudar a mover la unidad a su lugar de instalación final.
2. Verifique que la placa de datos coincida con la descripción de los dibujos de diseño del edificio (kVA, tensiones primarias y secundarias, etc.). Vea la figura 13.

Figura 13: Ejemplo de la placa de datos

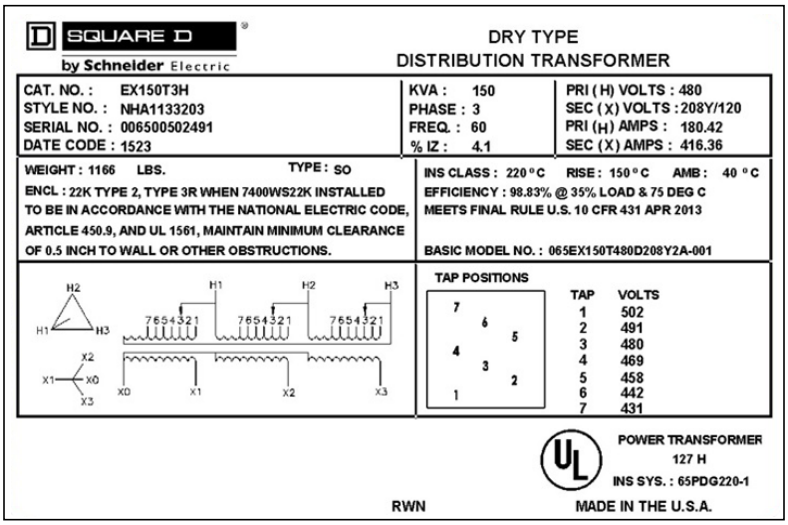

3. Coloque la unidad según los dibujos de diseño del edificio.
4. Verifique que el entorno sea adecuado para el tipo de gabinete.
5. Asegúrese de que la ubicación esté accesible para el personal calificado (de acuerdo con la norma NEC 450.13). Las unidades situadas al aire libre pueden ser montadas en paredes, columnas, o bien, soportadas desde estructuras.
6. Asegúrese de que haya ventilación adecuada ya que es esencial para enfriar correctamente los transformadores con ventilación. Consulte el código eléctrico nacional (NEC®) artículo 450.
   - — La distancia mínima está marcada en la placa de datos (NEC 450.9). Vea la figura 14 en la página 20.
   - — La distancia mínima varía según el estilo de gabinete. Consulte el dibujo de aprobación de Schneider Electric para conocer la distancia mínima.
   - — y se recomienda mantener limpio y seco su lugar de ubicación.
   - — El aire filtrado puede reducir el mantenimiento en caso de que la ubicación del transformador presente un problema

© 1992–2018 Schneider Electric Reservados todos los derechos

ESPAÑOL

Figura 14: Distancia mínima marcada en la placa de datos (NEC 450.9)

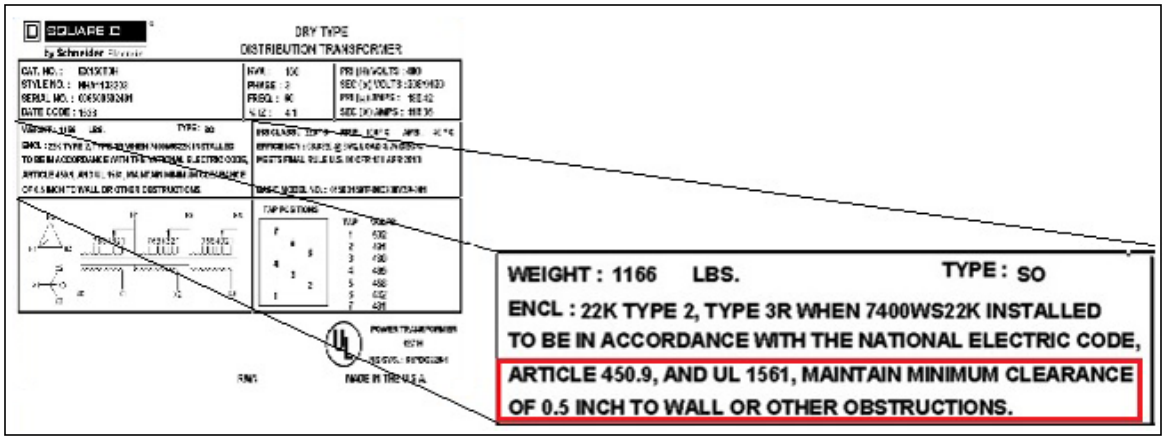

7. Instale los accesorios antes de instalar el transformador, si lo va a montar en la pared o el techo (montaje trapezoidal).
   a. Observe las cuatro ubicaciones de los agujeros de montaje en cada base del gabinete.
   b. Obtenga las dimensiones reales de los dibujos de aprobación de Schneider Electric.
   c. Sujete las unidades utilizando uno de los dos métodos de montaje: sin soportes de montaje en piso (figuras 15, 16 y 17 en la página 21) o con soportes de montaje en piso (figuras 18 y 19 en la página 21).
8. Coloque el transformador en su posición final.

Figura 15: Montaje: Gabinetes estilos D, H, K y E

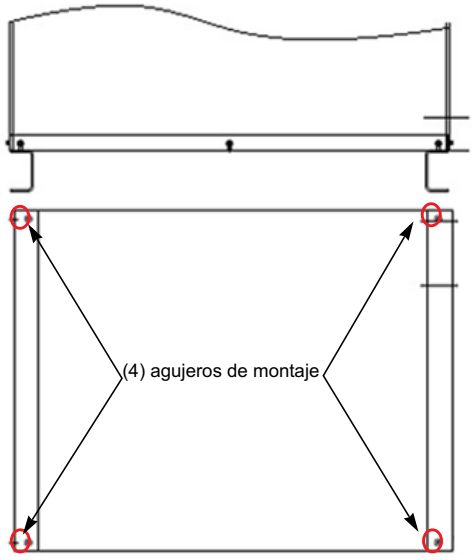

Figura 16: Gabinetes D, H, K y E

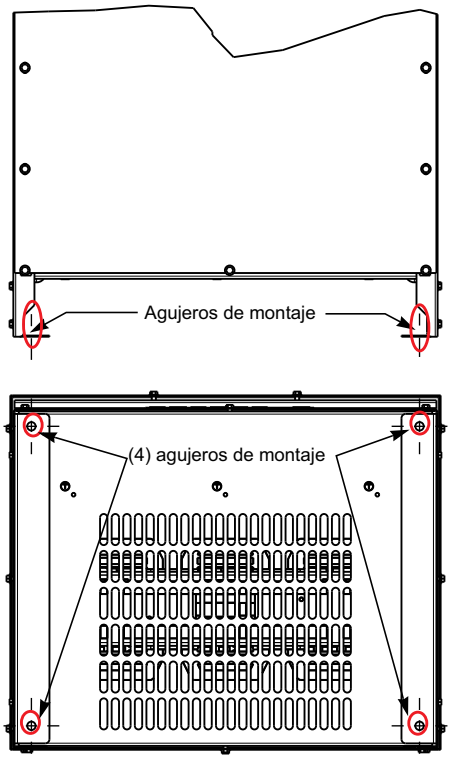

© 1992–2018 Schneider Electric Reservados todos los derechos

Figura 17: Montaje del gabinete estilo J: Con ventilación

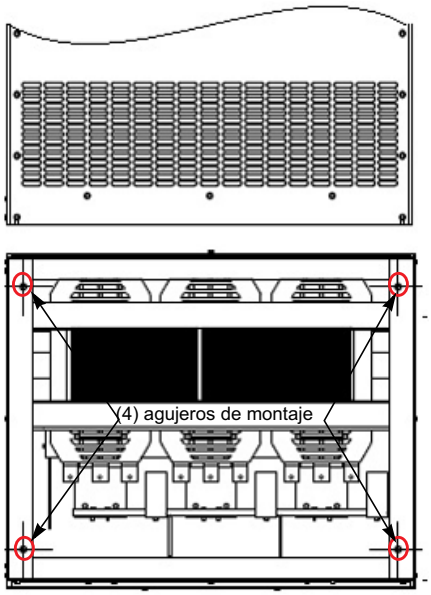

Unidades no adecuadas para su uso en piso combustible
(abierto en la parte inferior)

Figura 18: Soporte de montaje en piso: Gabinete estilo K

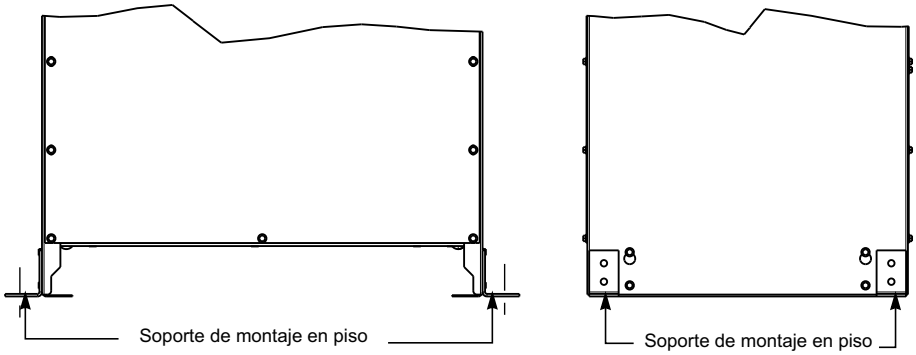

Figura 19: Soporte de montaje en piso: Gabinete estilo K

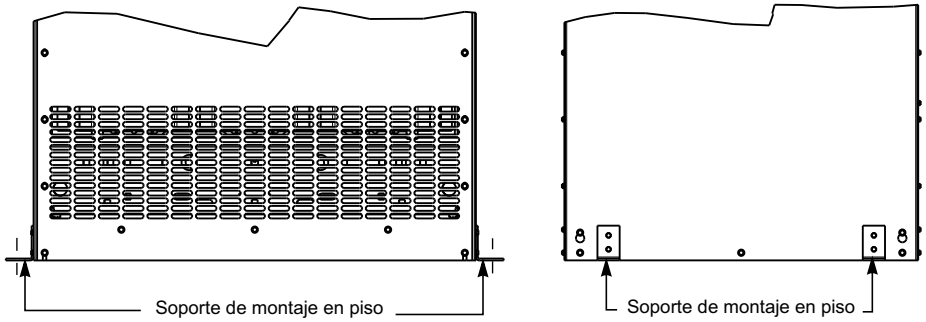

© 1992–2018 Schneider Electric Reservados todos los derechos

ESPAÑOL

Todos los estilos de gabinetes (D, E, F, H, K y J)

- Transformadores instalados en interiores (estilos D, E, F, H, K y J):
  - — Completamente cerrados o completamente cerrados con aberturas de ventilación; cumple con la norma NEC 450.21 (A) excepción.
  - — Unidades de más de 112,5 kVA
  - — Tienen sistemas de aislamiento para 220°C (428°F) o 200°C (392°F); cumple con la norma 450.21 (B) excepción no. 2

Vea la figura 20.

Figura 20: Transformadores instalados en interiores: NEC 450.21, excepciones A o B en el ejemplo de la placa de datos

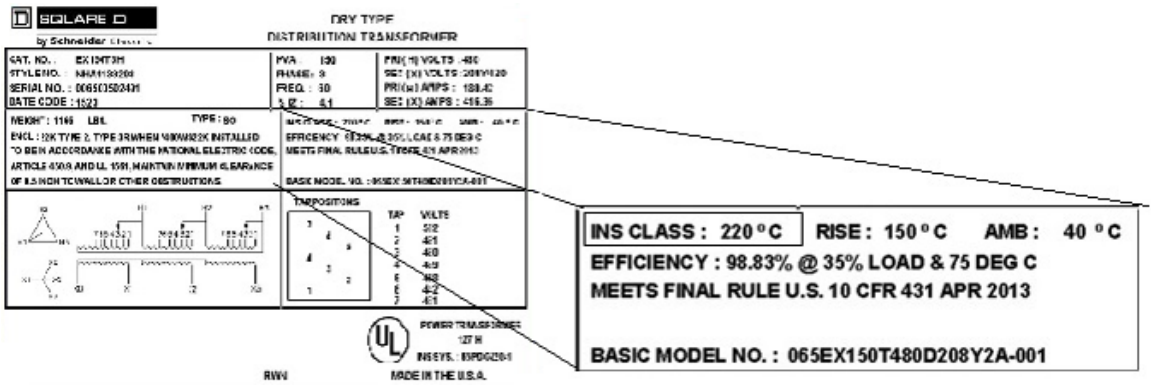

Tabla 1: Espacio libre en el gabinete

Gabinete estilo	Espacio libre al frente	Espacio libre a los lados (pulg / mm)	Espacio libre atrás (pulg / mm)
D	El espacio libre para realizar trabajos para todos los estilos varía sustancialmente dependiendo de la tensión y la aplicación específica. Consulte la norma NEC 110.26	0,50 / 12,7	Tipo EE – 3 / 76,2 Todos los demás estilos – 6 / 152
H			3 / 76,2
E			3 / 76,2
K			0,50 / 12,7
J			0,50 / 12,7
F			12 / 305

Los transformadores se pueden convertir de montaje en piso a montaje en pared (consulte la tabla 2 y la figura 21 en la página 23) o de montaje en piso a trapecio (consulte la tabla 3 y la figura 22 en la página 24) utilizando kits disponibles de fábrica. Los kits están preperforados para alinearlos con los agujeros de montaje del gabinete; y, cuando el transformador está instalado, conservan el espacio libre mínimo necesario para las unidades. El nuevo soporte de montaje en pared para el estilo K permite un espacio libre de 152 mm (6 pulgadas) y 76 mm (3 pulgadas), todos los demás estilos requieren un espacio libre de 152 mm (6 pulgadas).

Los kits de fábrica no incluyen los herrajes, éstos deben ser suministrados por el cliente. Los herrajes incluyen la varilla roscada para el montaje trapezoidal de los transformadores. El diseñador del proyecto deberá seleccionar los anclajes y herrajes así como su tamaño debido a la gran variedad de técnicas y materiales de construcción. Schneider Electric no puede aconsejarle sobre los anclajes, el montaje en pared, o tamaño de las varillas para el montaje trapezoidal.

© 1992–2018 Schneider Electric Reservados todos los derechos

Tabla 2: Conversión de montaje en piso a montaje en pared (utilizando kits de fábrica)

Gabinete estilo	Número de gabinete	Peso máximo (lb / kg)
D	17 – 20	700 / 317
H	17 – 18	700 / 317
E	17 – 20	700 / 317
K	17 – 20	850 / 386

Figura 21: Transformador montado en pared

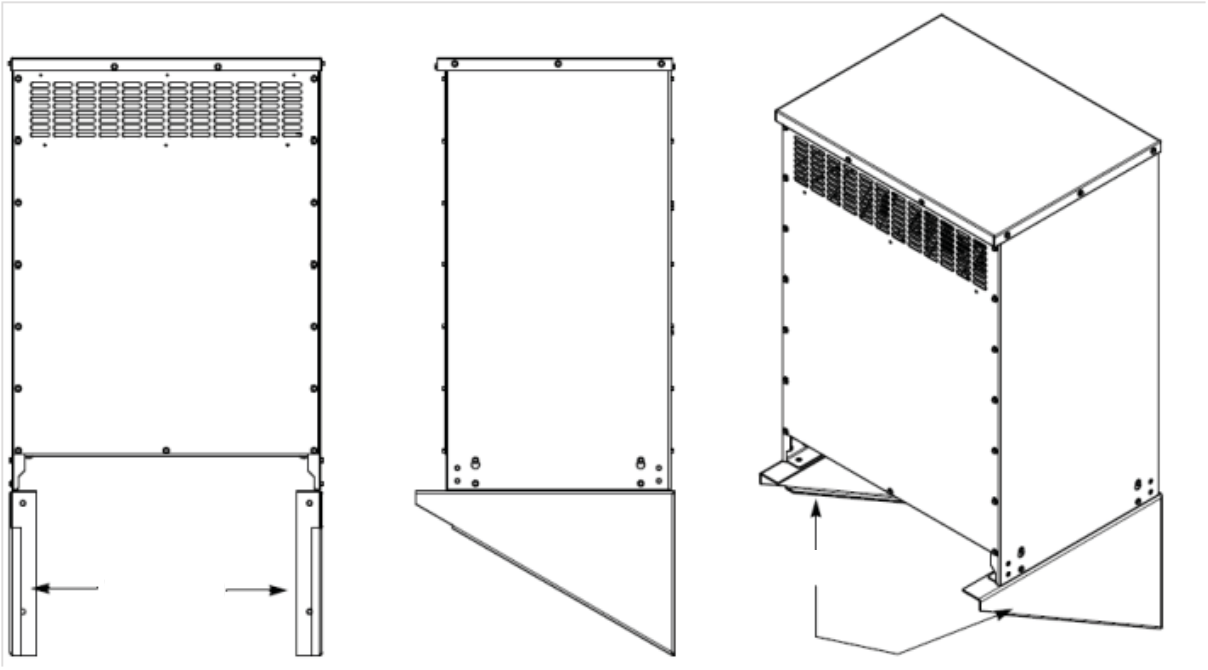

Vista desde el frente

Vista lateral

© 1992–2018 Schneider Electric Reservados todos los derechos

Tabla 3: Conversión de montaje en piso a trapezoidal (techo) (utilizando kits de fábrica)

Gabinete estilo	Número de gabinete	Peso máximo (lb / kg)
D	17 – 24	1200 / 544
H	17 – 18	1200 / 544
E	17 – 22	1200 / 544
K	17 – 22	1200 / 544

Figura 22: Transformador montado en trapecio (techo)

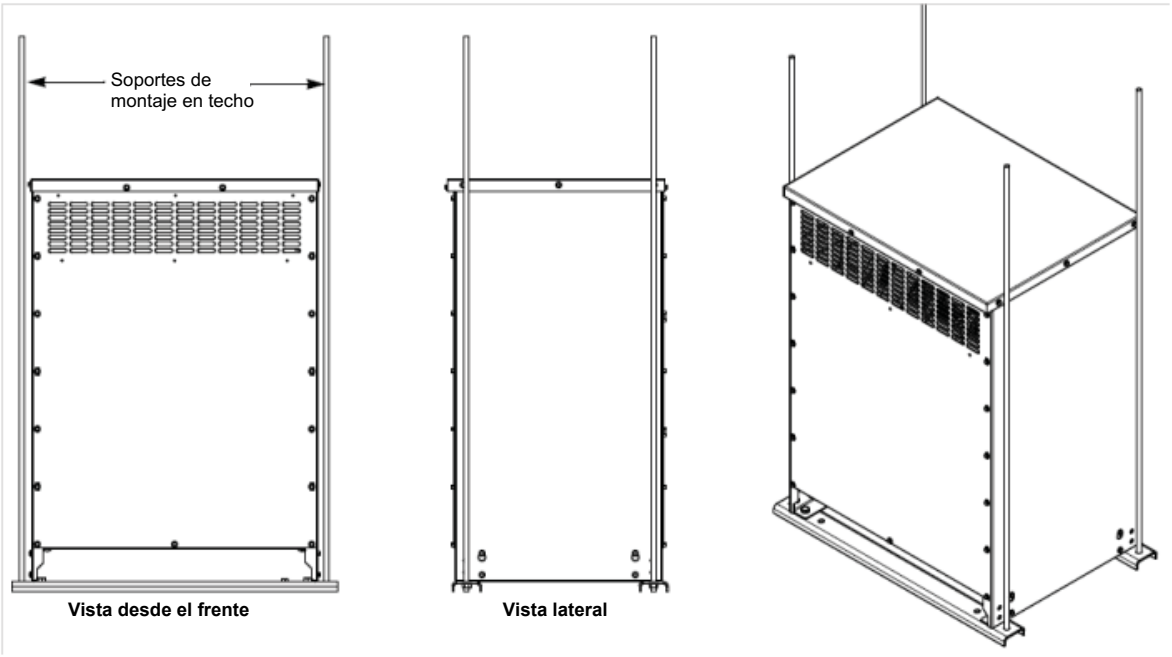

Los gabinetes D, E, H, K y J se pueden convertir al tipo 3R utilizando kits de instalación en campo. Vea la figura 23 en la página 25.

Gabinete tipo F – deberá solicitarse de fábrica si se va a instalar a la intemperie.

© 1992–2018 Schneider Electric Reservados todos los derechos

Figura 23: Kits para gabinete tipo 3R

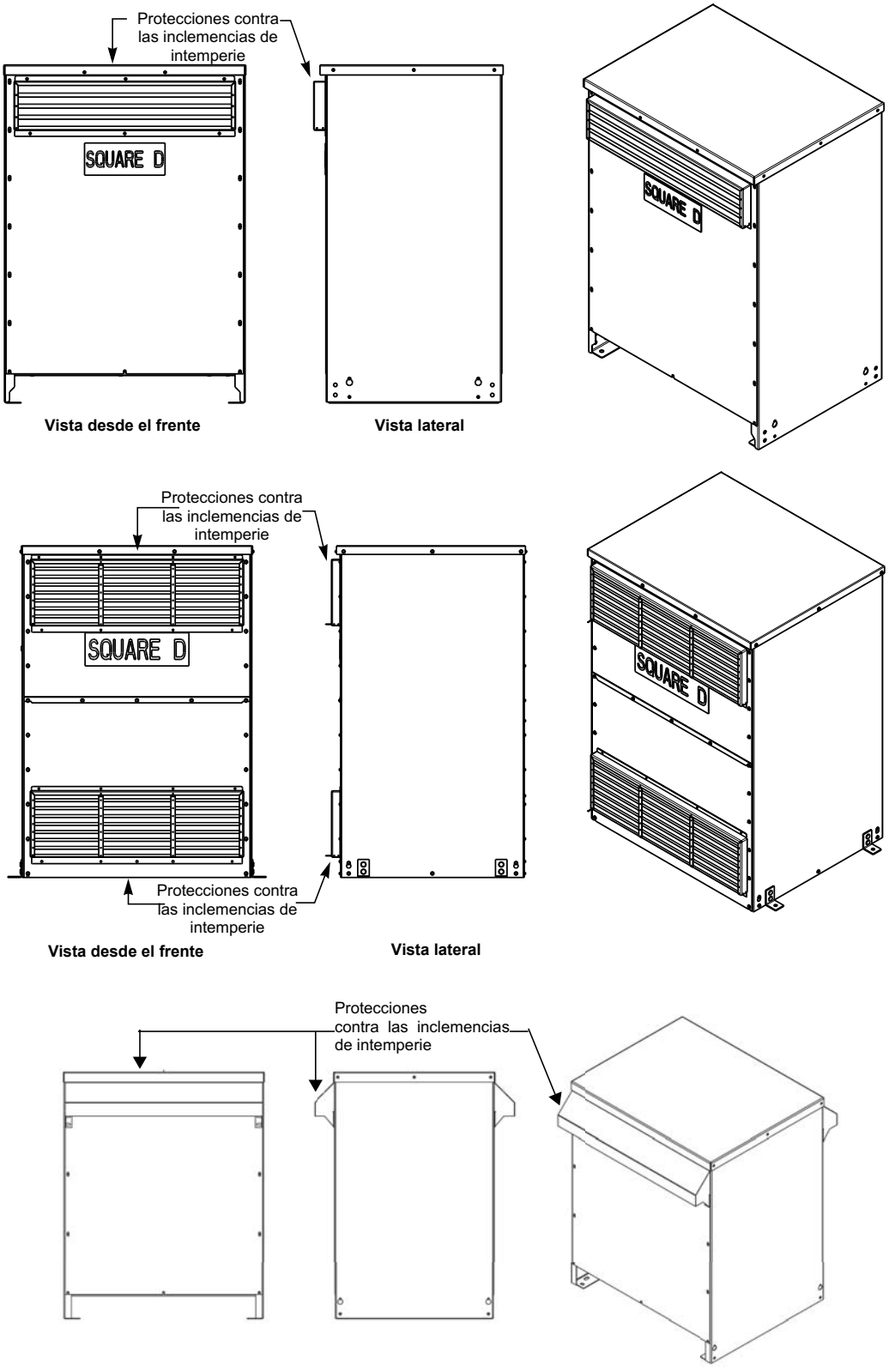

© 1992–2018 Schneider Electric Reservados todos los derechos

Puesta a tierra

1. Conecte permanente y adecuadamente a tierra el gabinete y el ensamble de núcleo de los transformadores tipo seco de acuerdo con los requisitos establecidos por el NEC o NOM-001-SEDE.
   - — Es posible conectar a tierra los devanados teniendo en cuenta las condiciones locales y según el NEC o NOM-001-SEDE.
   - — La barra de terminales de tierra debe ser aprobada por UL para este fin.
   - — Según la norma NEC 450.10, la barra de terminales deberá estar unida al gabinete para cumplir con los requisitos de la norma NEC 250.12 y no deberá instalarse en o sobre las aberturas de ventilación.
2. Conecte a tierra el transformador, accesorios y componentes relacionados de acuerdo con el NFPA 70 (NEC).
3. Termine todos los conductores de unión y puesta a tierra en un punto común de tierra del equipo en el gabinete.
4. Quite la pintura de alrededor del área donde se montará la barra de terminales de tierra para aumentar el contacto con las piezas del gabinete.
   - — Gabinetes estilos D, E y H: Un área está disponible en la base del transformador para perforar y montar la barra de terminales de tierra.
   - — Gabinete estilo K: Tres agujeros preperforados han sido marcados con el símbolo de tierra para montar la barra de terminales de tierra.
   - — Gabinete estilo J: Dos agujeros preperforados han sido marcados con el símbolo de tierra para montar la barra de terminales de tierra.

Los kits de zapatas secundarias marca Square D incluyen una barra de terminales de tierra con cuatro conductores. La barra puede obtenerse también como un dispositivo separado de Schneider Electric. Consulte la tabla 6 en la página 45 y figura 24.

Figura 24: Barra de terminales de tierra con cuatro conductores

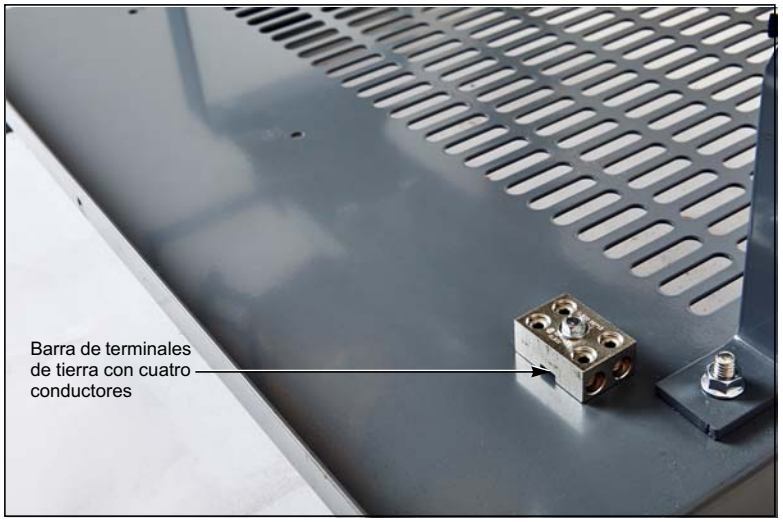

© 1992–2018 Schneider Electric Reservados todos los derechos

Clasificación sísmica

Los límites sísmicos para los transformadores tipo seco de baja tensión se obtienen de los resultados de las pruebas de mesa de vibración sísmica triaxial que se llevan a cabo de acuerdo con el protocolo de prueba AC156. Las certificaciones se basan en la ubicación donde se instalan las unidades y de acuerdo con los códigos de construcción que rigen la instalación.

Los resultados de los códigos de construcción están disponibles para CBC 2001, CBC 2007, CBC 2010, IBC 2000, IBS 2003, IBC 2006, IBC 2009, NBC 2005, NBCC 2005, NBCC 2010, NFPA 5000, UBC 94, CBC 95, UBC97 y UFC 3-310-04.

Póngase en contacto con su distribuidor local de Schneider Electric, o llame al 1-888-Square D (1-888-778-2733) para obtener el nivel específico de Sds, z/h e Ip para cada estilo de gabinete.

Los niveles suministrados se basan en las unidades que se van a montar y en las notas en los dibujos de aprobación. Se encuentran disponibles dibujos que incluyen las dimensiones de montaje, dimensiones de los agujeros de montaje, dimensiones generales, peso de la unidad y la ubicación aproximada del centro de gravedad para ayudar en la calificación sísmica. Póngase en contacto con su distribuidor local de Schneider Electric o llame al 1-888-778-2733 para obtener estos dibujos.

Terceras personas son responsables de detallar los requisitos de conexión al equipo y su anclaje (incluyendo el sistema de restricción lateral, si es apropiado) para la instalación del transformador. El encargado de la instalación y los fabricantes del anclaje y del sistema de restricción lateral son responsables de garantizar el cumplimiento con los requisitos de montaje.

Control de vibración/ruido

El transformador ha sido diseñado para minimizar el nivel de ruido audible producido. Cojinetes aisladores de ruido son sujetados entre el soporte de montaje del transformador y el gabinete utilizando tornillos y tuercas. Los herrajes de montaje son apretados antes de su envío para evitar daños.

Afloje la tuerca una vuelta completa para hacer flotar el transformador en los cojinetes aisladores, aislando así el transformador del gabinete. Esto reducirá aún más los niveles de ruido audible. Vea las figuras 25 y 26.

Figura 25: Etiqueta con la instrucción para aflojar la tuerca una vuelta completa (cuatro ubicaciones)

Figura 26: Flotando el transformador en los cojinetes aislantes/amortiguadores de ruido

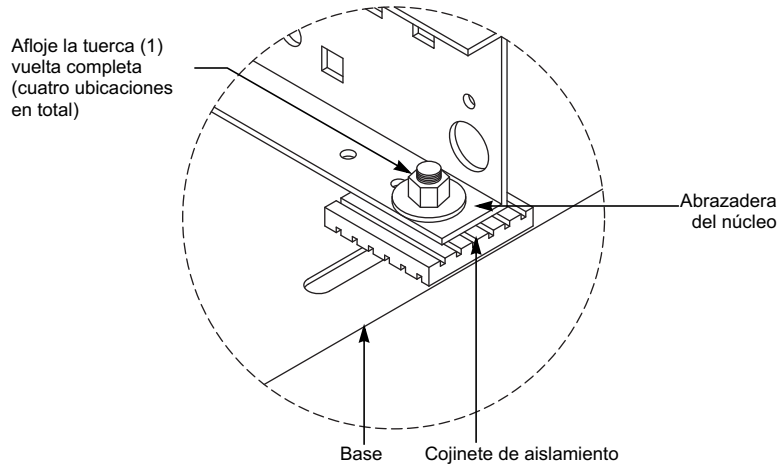

© 1992–2018 Schneider Electric Reservados todos los derechos

Además, el área donde se coloca el transformador puede afectar el nivel de ruido:

- ❑ Evite instalar el transformador en una esquina, un corredor estrecho o un área con superficies lisas; esto podría rebotar e intensificar el ruido.
- ❑ Sujete firmemente todos los paneles del gabinete. Los paneles sueltos pueden crear traqueteo e intensificar el ruido producido.
- ❑ Si es posible, utilice tubo conduit flexible.
- ❑ Asegúrese de que el tipo de estructura en que se va a montar el transformador sea suficientemente fuerte para soportar su peso.

Gabinete estilo K

Los tornillos del gabinete estilo K están accesibles desde la parte delantera con una extensión. Vea la figura 27.

Figura 27: Gabinete estilo K: Tornillos accesibles desde la parte delantera del transformador

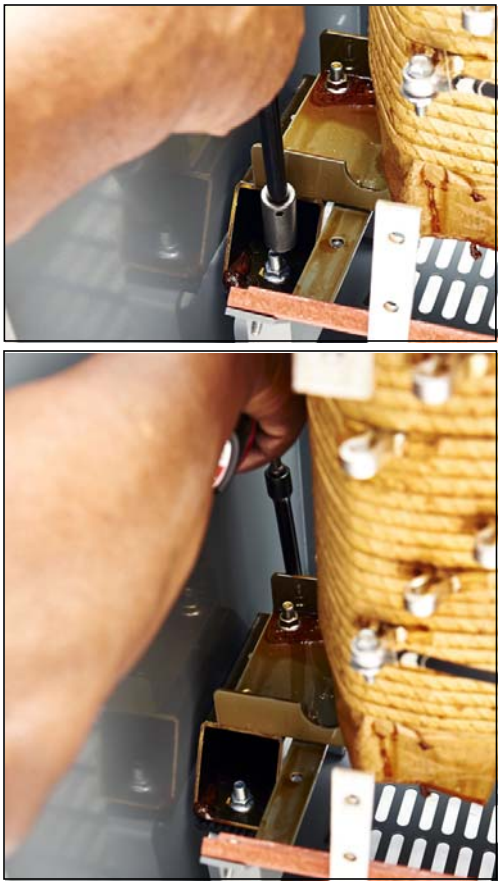

Gabinetes estilos D, E, H y J

Los tornillos de los gabinetes estilos D, E, H y J están accesibles desde la parte delantera.

Consulte la figura 26 en la página 27 para conocer el acceso para estos gabinetes.

© 1992–2018 Schneider Electric Reservados todos los derechos

Conexiones eléctricas

- ❏ Utilice conectores, tubo conduit y canalizaciones de cables flexibles, cuando sea posible, como conexiones a los gabinetes del transformador. Esto ayudará a reducir la generación de ruido audible.
- ❏ Cumpla con los requisitos del NFPA 70 (NEC) con respecto al espacio mínimo de doblez de los cables para el gabinete del transformador. Como un estándar de la industria, ate juntos los conductores de puesta a tierra del equipo, neutro y fases relacionados dentro del gabinete del transformador.
- ❏ Utilice siempre una llave de apriete prefijado calibrada para apretar las terminales y conectores eléctricos. Para obtener información adicional, consulte la norma UL468A.
- ❏ Asegúrese de que los conectores, tubo conduit y canalizaciones de cables entren al gabinete sólo por el área que se muestra en los dibujos. Los puntos de acceso para cada estilo de gabinete figuran a continuación:

- Gabinete estilo D: (vea la figura 28)
  - — Sección delantera del transformador
  - — Acceso por la parte inferior y a por uno de los lados
- Gabinete estilo E: (vea la figura 28)
  - — Sección delantera del transformador
  - — Acceso por la parte inferior y a por uno de los lados
- Gabinete estilo H: (vea la figura 28)
  - — Sección delantera del transformador
  - — Acceso por la parte inferior y a por uno de los lados
- Gabinete estilo K: (vea la figura 28)
  - — Sección delantera del transformador
  - — Acceso por la parte inferior y a por uno de los lados

Figura 28: Punto de acceso: Gabinetes estilos D, E, H y K

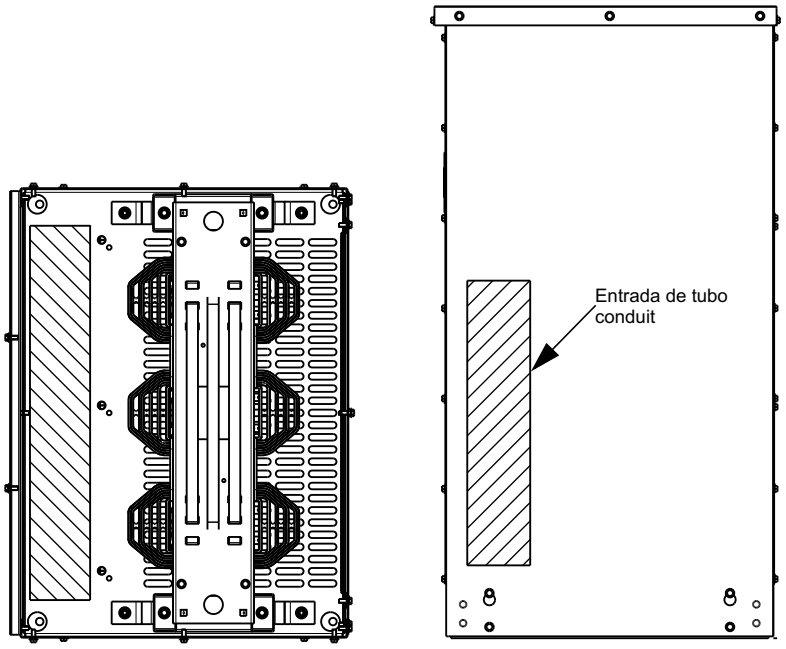

Mirando hacia abajo (parte delantera a la izquierda)

Vista lateral (el área rayada está en la sección delantera)

ESPAÑOL

© 1992–2018 Schneider Electric Reservados todos los derechos

- Gabinete estilo F:
  - — Sección inferior del transformador
  - — Se ofrecen cámaras de conexión de aire si es necesario el acceso por uno de los lados
- Gabinete estilo J: (vea la figura 29)
  - — Sección delantera del transformador
  - — Acceso por uno de los lados
  - — Acceso abierto por la parte inferior delantera a las abrazaderas del núcleo

Figura 29: Punto de acceso: Gabinete estilo J

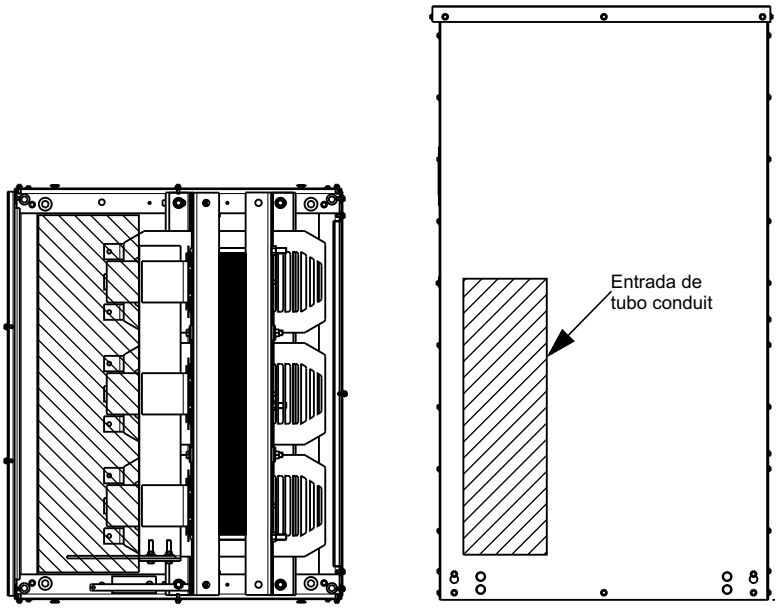

Mirando hacia abajo (parte delantera a la izquierda)

Vista lateral (el área rayada está en la sección delantera)

❑ Mantenga todos los puntos de acceso por debajo de la tarjeta de terminales superior para evitar que el calor salga a través de los conectores, tubo conduit y canalizaciones de cables. La calcomanía mostrará esta ubicación superior en todos los estilos de gabinete (también se muestra en los dibujos). Vea la figura 30.

Figura 30: Etiqueta que muestra la ubicación superior en los gabinetes (puntos de acceso por debajo de la tarjeta de terminales superior)

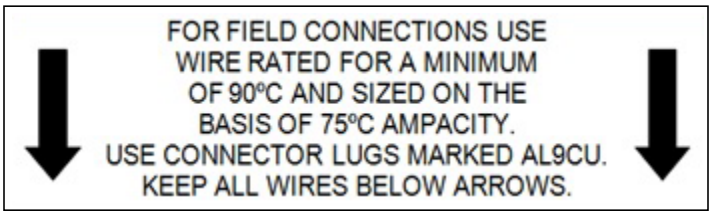

© 1992–2018 Schneider Electric Reservados todos los derechos

- ❏ Asegúrese de que el acceso por uno de los lados cumpla con los requisitos del NEC 312.6 (A): Espacio mínimo para el doblez de cables en las terminales. El acceso por la parte inferior debe cumplir con el NEC 312.6 (B): Espacio mínimo para el doblez de cables en las terminales.
- ❏ Cumpla con los requisitos de la norma UL 1561, que exige que todas las zapatas sean adecuadas para 90°C (194°F). Además, la temperatura de los conductores (según la tabla de valores nominales por tamaño) debe ser de 75°C (167°F) para que cumplan con los requisitos de corriente de los dispositivos de protección contra sobrecorriente y las corrientes especificadas en la placa de datos. Consulte la tabla 5 en la página 44, tabla 6 en la página 45 y tabla 7 en la página 46 para obtener una lista de los kits de zapatas marca Square D, tamaños de conductor por kVA y sistemas de tensión de EUA.
- ❏ Asegúrese de que la superficie de contacto esté limpia. Esto minimizará la posibilidad de un contacto de alta resistencia que podría causar calefacción localizada y posiblemente una falla prematura. Consulte Connections and Contact Surfaces en la página 38 para obtener instrucciones sobre cómo usar un compuesto eléctrico aprobado.
- ❏ Conecte las fases a las terminales adecuadas para obtener el giro correcto del motor. El diagrama de fases se muestra en la placa de datos. La placa de datos también muestra la ubicación de las derivaciones y su tensión nominal. Vea la figura 31.

Figura 31: Diagrama de fases, ubicación de las derivaciones y tensión nominal marcada en la placa de datos

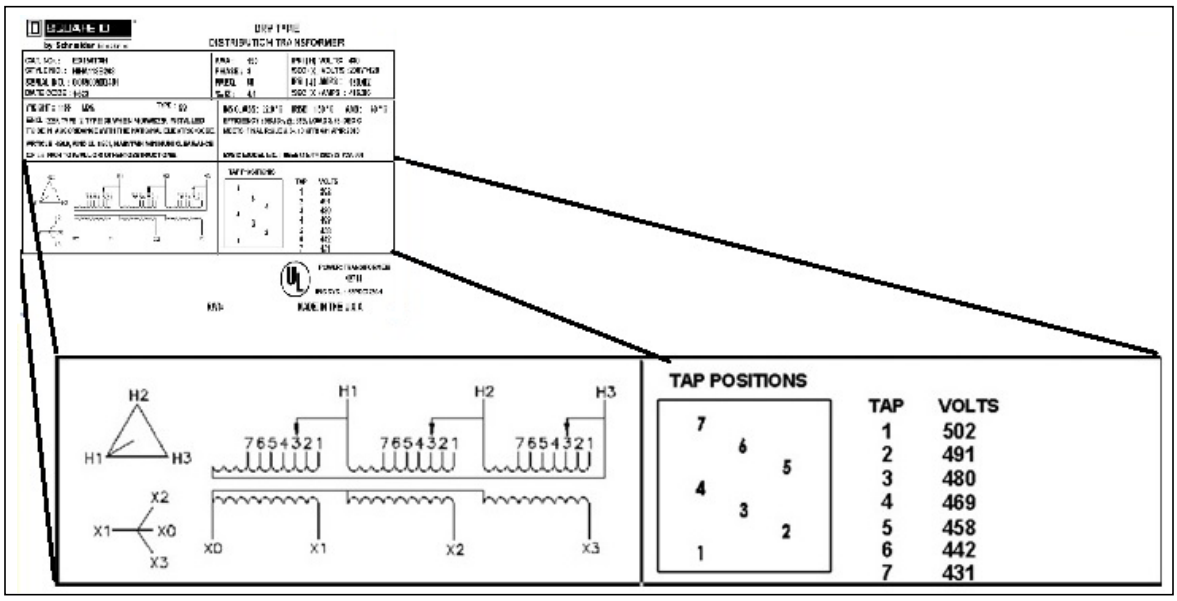

ESPAÑOL

❑ La conexión de la fuente de alimentación al secundario del transformador es permitida según el NEC 450.11 donde la instalación cumple con las instrucciones del fabricante.

Cuando la fuente de alimentación está conectada al secundario del transformador, la corriente de irrupción aumentará. El dispositivo de protección contra sobrecorrientes debe seleccionarse en base NEC 450.3(B) utilizando un margen del 250% con el fin de reducir el disparo involuntario durante la energización. La protección contra sobrecorriente del secundario será necesaria.

No realice conexiones a las terminales HO o XO del lado de la fuente en un devanado del transformador configurado en estrella. Vea la figura 32.

Figura 32: Etiqueta de precaución para los transformadores conectados en delta-estrella o estrella-delta

© 1992–2018 Schneider Electric Reservados todos los derechos

Pruebas y controles previos a la puesta en servicio / energización

Limpieza

1. Asegúrese de retirar todo el material de embalaje, incluyendo el material de embalaje utilizado dentro del gabinete del transformador utilizado para soportar y proteger la unidad durante el transporte.
2. Aspire tanto polvo como sea posible. El polvo actuará como un aislante térmico que aumentará la temperatura de la unidad y posiblemente podría disminuir su vida útil. Consulte Limpieza en la página 40.

Controles visuales y mecánicos

Realice las siguientes comprobaciones visuales y mecánicas. Asimismo, consulte Controles visuales y mecánicos en la página 39 para obtener una lista detallada de instrucciones.

- ❑ Visualmente inspeccione el transformador para determinar si existen daños físicos. Repare cualquier daño físico, si es posible y proporcione barreras protectoras adecuadas para evitar daños futuros.
- ❑ Compare la información en la placa de datos del transformador con los dibujos y/o especificaciones para la instalación.
- ❑ Verifique la conexión correcta de las derivaciones de acuerdo con la información en la placa de datos.
- ❑ Compruebe el espacio libre necesario para realizar las conexiones eléctricas. Verifique que todas las conexiones estén bien apretadas con una llave de apriete prefijado calibrada.
- ❑ Revise visualmente el núcleo, marco, gabinete, tubo conduit, canalizaciones de cables y conductores, y asegúrese de que estén correctamente unidos a tierra. Además, consulte Unión y puesta a tierra en la página 42.

© 1992–2018 Schneider Electric Reservados todos los derechos

Pruebas eléctricas

⚠ PELIGRO

PELIGRO DE DESCARGA ELÉCTRICA, EXPLOSIÓN O DESTELLO POR ARQUEO

- Utilice equipo de protección personal (EPP) apropiado y siga las prácticas de seguridad en trabajos eléctricos establecidas por su Compañía, consulte la norma NFPA 70E. NOM-029-STPS-2011, o CSA Z462.
- Solamente el personal eléctrico calificado deberá instalar y prestar servicio de mantenimiento a este equipo.
- Asegúrese de leer y entender todas las instrucciones de este boletín antes de realizar cualquier trabajo en este equipo.
- Desenergice el equipo antes de realizar cualquier trabajo dentro o fuera de él.
- Siempre utilice un dispositivo detector de tensión nominal adecuado para confirmar la desenergización del equipo.
- Siga todos los procedimientos de bloqueo y etiquetado de acuerdo con los requisitos de OSHA.
- Inspeccione detenidamente el área de trabajo y retire las herramientas u objetos que hayan quedado dentro del equipo.
- Vuelva a colocar todos los dispositivos, las puertas y las cubiertas antes de energizar este equipo.
- Todas las instrucciones de este manual fueron escritas suponiendo que el cliente ha adoptado estas medidas de precaución antes de prestar servicios de mantenimiento o realizar una prueba.

El incumplimiento de estas instrucciones podrá causar la muerte o lesiones serias.

Consulte Servicio de mantenimiento en la página 39 para realizar las siguientes pruebas eléctricas previas a la puesta en servicio:

- ❑ Mida la resistencia de contacto utilizando un óhmetro de baja resistencia. Consulte Resistencia de los contactos en la página 41.
- ❑ Realice pruebas de resistencia de aislamiento con un dispositivo apropiado. Consulte Resistencia del aislamiento en la página 41.
- ❑ Realice una prueba de razón de vueltas en todas las derivaciones y en las tensiones plenas del devanado para cada fase. Consulte Razón de vueltas en la página 42.
- ❑ Mida y registre las resistencias del devanado en los transformadores más grandes (>500 kVA). Consulte Resistencia del devanado en la página 42.

© 1992–2018 Schneider Electric Reservados todos los derechos

Sección 5—Funcionamiento

⚠ PELIGRO

PELIGRO DE DESCARGA ELÉCTRICA, EXPLOSIÓN O DESTELLO POR ARQUEO

- Utilice equipo de protección personal (EPP) apropiado y siga las prácticas de seguridad en trabajos eléctricos establecidas por su Compañía, consulte la norma 70E de NFPA, Z462 de CSA o NOM-029-STPS-2011.
- Solamente el personal eléctrico calificado deberá instalar y prestar servicio de mantenimiento a este equipo.
- Asegúrese de leer y entender todas las instrucciones de este boletín antes de realizar cualquier trabajo en este equipo.
- Desenergice el equipo antes de realizar cualquier trabajo dentro o fuera de él.
- Siempre utilice un dispositivo detector de tensión nominal adecuado para confirmar la desenergización del equipo.
- Antes de realizar una inspección visual, pruebas o servicio de mantenimiento al equipo, desconecte todas las fuentes de alimentación eléctrica. Suponga que todos los circuitos están “vivos” hasta que hayan sido completamente desenergizados, probados y etiquetados. Preste particular atención al diseño del sistema de alimentación. Tome en consideración todas las fuentes de alimentación, incluyendo la posibilidad de retroalimentación.
- Siga todos los procedimientos de bloqueo y etiquetado de acuerdo con los requisitos de OSHA.
- Inspeccione detenidamente el área de trabajo y retire las herramientas u objetos que hayan quedado dentro del equipo.
- Vuelva a colocar todos los dispositivos, las puertas y las cubiertas antes de energizar este equipo.
- Todas las instrucciones de este manual fueron escritas suponiendo que el cliente ha adoptado estas medidas de precaución antes de prestar servicios de mantenimiento o realizar una prueba.

El incumplimiento de estas instrucciones podrá causar la muerte o lesiones serias.

Efectos de la humedad

El proceso estándar de baño y barniz horneado no permite el crecimiento de hongos. La única preocupación cuando las unidades se almacenan en áreas de alta humedad es la conservación de la integridad del material de aislamiento. Si las unidades se mantienen y limpian debidamente durante la desconexión, antes de largos períodos de desenergización no debería haber ningún problema con hongos.

Las condiciones de humedad no son de importancia mientras esté energizado el transformador. Sin embargo, siga los pasos de precaución delineados a continuación si el transformador está desenergizado, si se deja enfriar a la temperatura ambiente y si ha estado desconectado durante más de 12 horas (particularmente en condiciones de mucha humedad).

1. Coloque calefactores de cinta pequeños en la parte inferior de la unidad inmediatamente después de desconectarla para mantener su

© 1992–2018 Schneider Electric Reservados todos los derechos

temperatura unos cuantos grados por encima de la temperatura en el medio ambiente.

2. Inspeccione la unidad para ver si encuentra evidencia de humedad antes de regresarla al servicio.
3. Verifique la resistencia de aislamiento. Si existe evidencia de humedad, o si la resistencia de aislamiento es menor que 1 megohm, seque el transformador colocándolo en un horno o soplando aire caliente sobre él.

Temperatura del gabinete

La elevación de la temperatura en el exterior del gabinete de los transformadores ventilados no deberá exceder 50 °C (122 °F) excepto en los casos indicados en la norma UL 1561.

Antes de energizar los transformadores

1. Retire los soportes temporales. Vea la figura 33.
2. Compruebe las conexiones eléctricas atornilladas. Consulte Conexiones eléctricas en la página 29 para obtener una lista de comprobaciones detalladas.
3. Quite la acumulación excesiva de suciedad de los devanados del transformador y aisladores para que circule el aire libremente y protegerlo para que no se rompa el aislamiento. Consulte Limpieza en la página 40 para obtener una lista de comprobaciones detallada.
4. Realice pruebas de resistencia de aislamiento con un dispositivo apropiado. Consulte Resistencia del aislamiento en la página 41 para obtener instrucciones detalladas.
5. Realice una comprobación visual y mecánica del transformador y su entorno. Consulte Controles visuales y mecánicos en la página 39 para obtener una lista de comprobaciones detallada.

Figura 33: Desmontaje de los soportes temporales

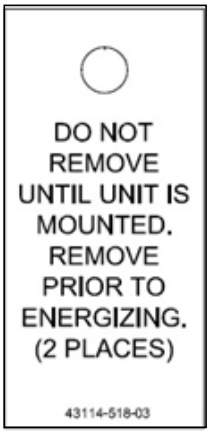

Energización del transformador

1. Siga todas las precauciones de seguridad y requisitos de PPE como se describe en la norma NFPA 70E y otras normas o códigos aplicables.
   a. De inmediato desenergice el transformador si existe alguna indicación de formación de arcos (visual o audible) en cualquier momento durante la puesta en servicio inicial.
   b. Investige y corrija la causa de la formación de arcos antes de volver a energizar la unidad.
2. Investige y corrija las fuentes de ruido excesivo. Cuando está energizado, el transformador hará ruido audible. Excesivo ruido mecánico, zumbido o traqueteo puede ser una indicación de herrajes o piezas del gabinete incorrectamente instalados o apretados.

© 1992–2018 Schneider Electric Reservados todos los derechos

3. Mida y verifique las tensiones de fase a fase y fase a tierra del primario y secundario para todos los devanados.
   a. Cuando fuese aplicable, también mida y verifique las tensiones de fase a neutro.
   b. Anote y guarde los valores para referencia futura.

   NOTA: Las mediciones de fase a fase, fase a tierra y fase a neutro comprobarán que el transformador está funcionando de acuerdo con las tensiones de la placa de datos.

   c. Mida las tensiones de fase a tierra.
   d. Anote y guarde los valores para referencia futura.

   NOTA: Las tensiones de fase a tierra verificarán que la unidad se ha instalado correctamente.

4. Mueva una derivación a la vez, o compruebe que el puente esté conectado a tierra de acuerdo con el diagrama de alambrado que se muestra en la placa de datos. Vea la figura 31 en la página 29.

   NOTA: No cambie las derivaciones cuando el transformador esté energizado.

   a. Ajuste las derivaciones del transformador como sea necesario para obtener los requisitos de la tensión real.
   b. Asegúrese de que las derivaciones estén limpias de barniz u otro material aislante.

5. Realice una comprobación de la rotación de fases con un dispositivo adecuado para las cargas que son sensibles a errores de rotación de fases (por ejemplo, ciertas aplicaciones de motores o variadores).
   a. Siga las instrucciones del fabricante para el dispositivo.
   b. Corrija los errores de rotación de fases antes de energizar el transformador.

© 1992–2018 Schneider Electric Reservados todos los derechos

© 1992–2018 Schneider Electric Reservados todos los derechos

Sección 6—Servicio de mantenimiento

Controles visuales y mecánicos

⚠ PELIGRO

PELIGRO DE DESCARGA ELÉCTRICA, EXPLOSIÓN O DESTELLO POR ARQUEO

- Sólo el personal calificado debe limpiar, inspeccionar, prestar servicio de mantenimiento y probar los transformadores.
- Desenergice el equipo antes de realizar cualquier trabajo en él.
- Desconecte y aísle eléctricamente la alimentación al transformador de manera que no haya contacto accidental con las piezas energizadas.
- Descargue todas las cargas estáticas que poseen las bobinas.

El incumplimiento de estas instrucciones podrá causar la muerte o lesiones serias.

1. Realice una inspección visual del transformador y su entorno.
   a. Inspeccione el gabinete para determinar si hay daño físico.
   b. Repare el daño, si es posible.
   c. Proporcione protecciones para evitar daños en el futuro.
2. Anote los datos operacionales mientras que el transformador está energizado y en servicio.
3. Desenergice el transformador antes de realizar cualquier trabajo en la unidad.
   a. Siga todos los procedimientos de seguridad para colocar la unidad en una condición eléctricamente segura.
   b. Retire las cubiertas de acceso. Inspeccione el equipo para determinar:
   — suciedad en las superficies de aislamiento y en áreas en que la circulación del aire pueda ser restringido.
   — conexiones sueltas
   — la condición de los conmutadores de tomas o tarjetas de terminales.
   — la condición general del transformador.
4. Inspeccione el gabinete, transformador, terminales, tarjeta de terminales y aisladores para determinar si hay evidencia de sobrecalentamiento proveniente de fuentes internas o externas. Compruebe si hay deformaciones de tensión en las superficies del aislamiento, evidentes por rastreo o carbonización.
5. Compruebe si hay evidencia de oxidación, corrosión y deterioro de la pintura. Repare los daños por oxidación y corrosión en caso de ser necesario.

Frecuencia

La frecuencia de inspección de los transformadores depende de las condiciones de funcionamiento.

En ubicaciones limpias y secas, una inspección al año será suficiente. Sin embargo, para otras ubicaciones por ejemplo en las que el aire está contaminado con partículas de polvo o humos químicos, es necesario inspeccionar el transformador cada tres o seis meses. Por lo general, después de unas cuantas inspecciones, un calendario de inspección más definitivo deberá ser programado en base a las condiciones existentes del transformador.

© 1992–2018 Schneider Electric Reservados todos los derechos

Eventos severos, ambientales o especiales

- ❑ Realice inspecciones, servicios de mantenimiento y pruebas de rutina después de haberse producido un cortocircuito eléctrico severo, falla a tierra o evento ambiental (por ej., inundación) para determinar el estado de funcionamiento del transformador.
- ❑ Realice las inspecciones, servicios de mantenimiento y pruebas si el transformador ha estado fuera de servicio durante un período largo de tiempo. Coloque calefactores de cinta para mantener la temperatura del transformador por encima de la temperatura ambiente para evitar que se forme condensación en el transformador durante el tiempo de inactividad.

Limpieza

Conexiones y superficies de contacto

Es importante que la superficie de contacto esté limpia, y que las terminales también estén limpias. Cuando los transformadores están instalados en interiores o exteriores, o bien, en un entorno severo, las conexiones deben estar selladas con un compuesto para juntas eléctricas aprobado.

Aplique el compuesto en la superficie de las conexiones expuestas antes de realizar las conexiones con tornillo.

Gabinetes, devanados y aisladores

1. Desenergice el transformador.
2. Siga la lista de comprobaciones abajo para permitir que circule el aire libremente y para evitar roturas del aislamiento así como problemas con el rendimiento térmico.

- ❑ Limpie el gabinete, los devanados y aisladores del transformador aspirando o soplando nitrógeno o aire comprimido limpio y seco. Asegúrese de usar equipo de protección personal apropiado (PPE) al realizar procedimientos de limpieza.

  NOTA: Como primer paso de limpieza se prefiere la aspiración. El aire comprimido deberá tener un punto de condensación de -45,5°C (-50°F) o menos, y una presión igual o inferior a 25 psi.

- ❑ Limpie los soportes de los conductores, conmutadores de tomas, tarjetas de terminales, cojinetes y demás superficies de aislamiento principales con trapos que no dejen peluza o cepillos con cerdas suaves.

  NOTA: No utilice líquidos, solventes o detergentes, ya que estos pueden deteriorar el material aislante.

- ❑ Con cuidado inspeccione y limpie completamente las aberturas de ventilación (conductos) y ensambles de devanado. Retire las obstrucciones.

- ❑ Retire la basura y/o material combustible del área alrededor de la unidad.

© 1992–2018 Schneider Electric Reservados todos los derechos

Pruebas eléctricas

⚠ PELIGRO

PELIGRO DE DESCARGA ELÉCTRICA, EXPLOSIÓN O DESTELLO POR ARQUEO

- Sólo el personal calificado debe limpiar, inspeccionar, prestar servicio de mantenimiento y probar los transformadores.
- Desenergice el equipo antes de realizar cualquier trabajo en él.
- Desconecte y aísle eléctricamente la alimentación al transformador de manera que no haya contacto accidental con las piezas energizadas.
- Descargue todas las cargas estáticas que poseen las bobinas.

El incumplimiento de estas instrucciones podrá causar la muerte o lesiones serias.

Realice las siguientes pruebas eléctricas durante los servicios de mantenimiento:

- ❑ Compruebe todos los contactos eléctricos con una llave de apriete prefijado calibrada.
- ❑ Asegúrese de que haya espacio apropiado.
- ❑ Consulte las especificaciones del fabricante para conocer los valores de par apriete.
- ❑ Revise todos los herrajes externos y asegúrese de que estén bien apretados.

Resistencia de los contactos

- ❑ Utilice un óhmetro de baja resistencia para medir la resistencia de los contactos.
  a. Compare los valores con conexiones similares para ver si encuentra puntos de alta resistencia inusuales.
  b. Investigue las conexiones que puedan desviarse de los valores comunes, más del 50% de los valores más bajos.
- ❑ Un dispositivo de exploración infrarroja (escáner) puede ser utilizado para buscar temperaturas anormales en los contactos del transformador para las unidades energizadas.

  NOTA: Tenga cuidado de seguir los procedimientos del fabricante, ya que errores pequeños en el funcionamiento del escáner puede causar errores significativos en las temperaturas detectadas.

Resistencia del aislamiento

Los controles de la resistencia del aislamiento pueden crear una carga capacitiva en uno de los devanados.

1. Conecte a tierra cada devanado por lo menos un minuto entre las pruebas para agotar la carga estática creada durante la prueba.
2. Realice pruebas de resistencia del aislamiento con un dispositivo apropiado.
3. Realice pruebas de devanado a devanado y devanado a tierra.
4. Anote todos los resultados de las pruebas para comparar con lecturas futuras.
   — Los valores dependen del sitio de instalación y no son predeterminados de fábrica. Todas las pruebas deben cumplir con la norma NEMA ST-20.
   — Las lecturas de resistencia del aislamiento deberán ser de por lo menos 1 megohm.
   — Las lecturas inferiores pueden indicar la presencia de humedad y necesitarán un procedimiento de secado para corregirla.

© 1992–2018 Schneider Electric Reservados todos los derechos

Resistencia del devanado

En los transformadores grandes (>500 kVA):

1. Mida las resistencias del devanado y anótelas para usar como referencia futura.
2. Compare los resultados con los valores obtenidos durante las comprobaciones previas a la puesta en servicio. Las lecturas no deben variar más del 5% con las bobinas adyacentes y los controles previos a la puesta en servicio.
3. Anote la temperatura en la cual estas lecturas iniciales fueron tomadas.
   - — Los valores dependen del sitio de instalación y no son predeterminados de fábrica. Todas las pruebas deben cumplir con la norma NEMA ST-20.
4. Ajuste los valores de resistencia en base a las diferencias en temperatura entre las lecturas actuales y los valores previos a la puesta en servicio.

Unión y puesta a tierra

1. Compruebe los valores correctos de resistencia entre la zapata (o punto) de tierra del sistema y el gabinete, núcleo, marco y abrazaderas del transformador.
2. Compare con los valores previos a la puesta en servicio, buscando tendencias que puedan indicar un compromiso en la calidad de la unión de tierra.

Razón de vueltas

1. Realice una prueba de razón de vueltas en todas las derivaciones y en las tensiones plenas del devanado para cada fase. Cambios significativos pueden indicar una pérdida de continuidad en el devanado.
   a. Compare estos valores con aquellos obtenidos durante las comprobaciones previas a la puesta en servicio. Las tensiones entre las fases no deberán desviarse más del 0,5% de las bobinas adyacentes.
   b. Investigue las lecturas anormales que se hayan encontrado fuera de este límite.
2. Verifique que las tensiones de entrada y salida sean las correctas para las tensiones de salida y derivación esperadas. Investigue las lecturas anormales.

Cojinetes aisladores de ruido

Inspeccione los cojinetes aisladores de ruido para ver si hay indicación de deterioro físico.

Conductos de enfriamiento de bobinas

1. Inspeccione todos los conductos de enfriamiento de bobinas para determinar si hay acumulación de polvo, suciedad o alguna otra obstrucción.
2. Siga los procedimientos normales de limpieza para asegurarse de que el aire circula adecuadamente.

Terminales

Asegúrese de que las terminales estén en buen estado para que los transformadores funcionen correctamente.

- ❑ Inspeccione las terminales: alineación, ajuste (consulte los requisitos de par de apriete), presión, quemaduras o corrosión. Investigue y corrija cualquier indicación de daño.
- ❑ Repare las picaduras livianas, siempre que el revestimiento metálico en las terminales pueda ser reparado.

© 1992–2018 Schneider Electric Reservados todos los derechos

Sección 7—Accesorios y piezas de repuesto

Consulte las figuras 34 y 35 para obtener detalles sobre las cubiertas (superior, trasera y delantera) y los paneles laterales (izquierdo y derecho) del transformador; y la figura 21 en la página 21 y la figura 22 en la página 22 para los soportes de montaje (pared y techo). Consulte la tabla 4 en la página 44 para obtener una lista de las piezas de repuesto y accesorios.

Figura 34: Detalles del ensamble para el transformador de eficiente energética EX75T3H con cubierta frontal de gabinete estilo 20K

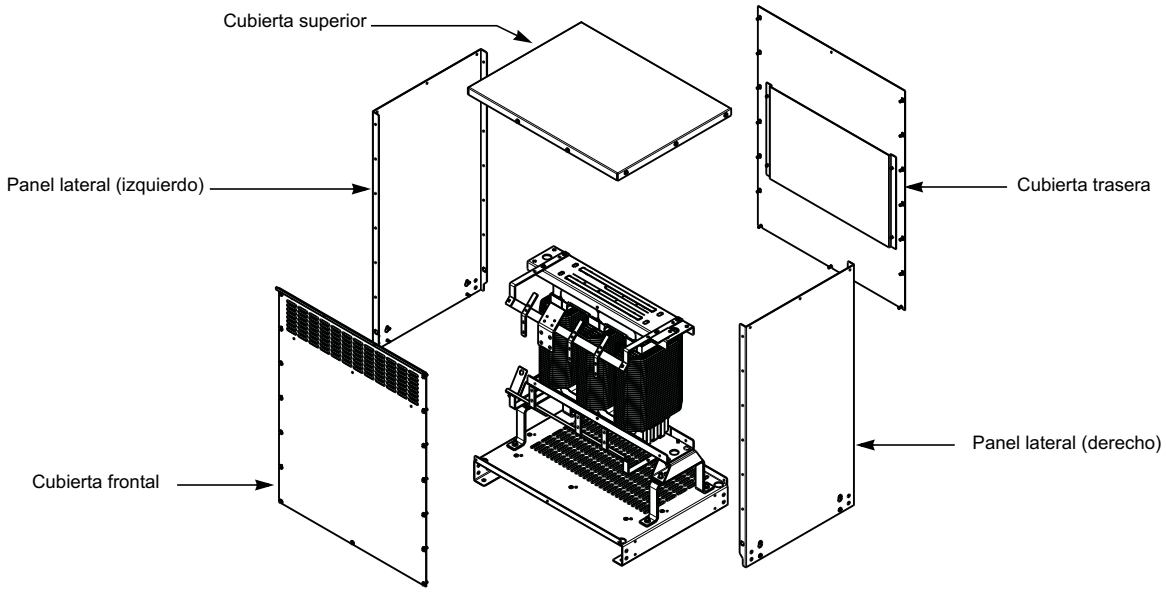

Figura 35: Detalles del ensamble para el transformador de eficiente energética EX300T3H con cubierta frontal de gabinete estilo 25J

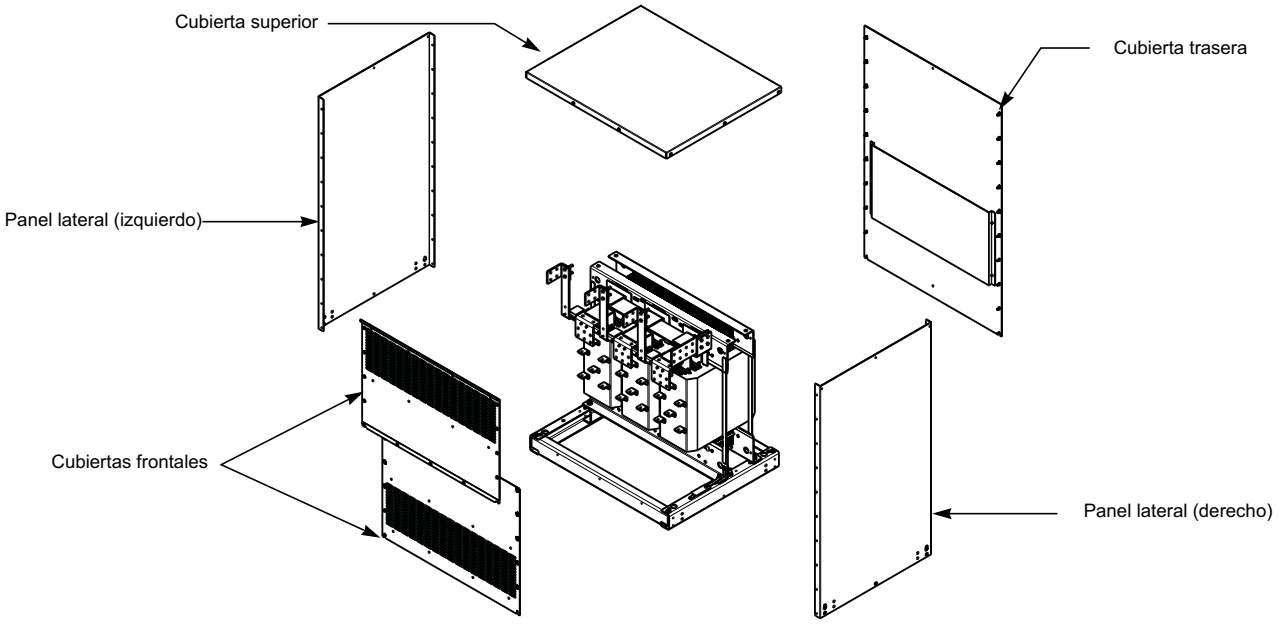

© 1992–2018 Schneider Electric Reservados todos los derechos

Consulte el *Compendiado de Schneider Electric, sección 14,* Transformadores, o bien, llame al 1-888-778-2733 (ÉUA) para solicitar las piezas de repuesto y accesorios.

Consulte la tabla 4 para conocer los tipos de gabinete (cubiertas superior, frontal y trasera), paneles laterales, protecciones para intemperie y soportes de montaje (pared y techo).

Tabla 4: Cubiertas, paneles laterales, protecciones para intemperie y soportes de montaje

Gabinete	Cubierta superior	Cubierta posterior	Cubierta frontal	Panel lateral (izquierda y derecha)	Protección para intemperie	Soporte de montaje en pared	Soporte de montaje de techo
	Número de catálogo						
17D	4310191501	4310191601	4310191601	4310191701	WS363	WMB361362	CMB363
17E	4310191501	—	—	4310191701	—	WMB361362	CMB363
17H	4310191501	4305502003	4305502003	4310191702	WS363	WMB361362	CMB363
17K	7400TC17K	7400R17K	7400FNP17K	7400LR17K	7400WS17K	7400WMB17K	7400CMB17K
18D	4305502101	4305502001	4305502001	4305501001	WS363	WMB363364	CMB363
18E	4305502101	—	—	4305501001	—	WMB363364	CMB363
18H	4305502101	4305502003	4305502003	4310179701	WS363	WMB363364	CMB363
18K	7400TC18K	7400R18K	7400FNP18K	7400LR18K	7400WS18K	7400WMB18K	7400CMB18K
19D	4305501201	4305501101	4305501101	4305501001	WS364	WMB363364	CMB364
19E	—	—	—	—	—	—	—
19K	7400TC19K	7400R19K	7400FNP19K	7400LR19K	7400WS19K	7400WMB19K	7400CMB19K
20D	4305501201	4310192201	4310192201	4310179701	WS364	WMB363364	CMB364
20E	4305501201	—	—	4310179701	—	—	—
20K	7400TC20K	7400R20K	7400FNP20K	7400LR20K	7400WS20K	7400WMB20K	7400CMB20K
21D	4305512501	4300507404	4300507404	4305512601	WS364	—	CMB364
21E	4305512501	—	—	4305512601	—	—	CMB364
21K	7400TC21K	7400R21K	7400FNP21K	7400LR21K	7400WS21K	—	7400CMB21K
22D	4310189001	4310189102	4310189102	4310189201	WS380	—	CMB380
22E	4310189001	—	—	4310189201	—	—	CMB380
22K	7400TC22K	7400R22K	7400FNP22K	7400LR22K	7400WS22K	—	7400CMB22K
23E	—	—	—	—	—	—	—
24D	4310190701	4310190802	4310190802	4310190901	WS381	—	CMB381
24E	4310190701	—	—	4310190901	—	—	CMB381
24K	7400TC24K	7400R24K	7400FNP24K	7400LR24K	7400WS24K	—	7400CMB24K
25D	4310189901	4310190001	4310190001	4310190101	WS382	—	—
25E	4310189901	—	—	4310190101	—	—	—
25J	7400TC25J	7400R25J	7400FNP25J	7400LR25J	7400WS25J	—	—
26D	—	—	—	—	—	—	—
28D	—	—	—	—	—	—	—
28E	—	—	—	—	—	—	—
29D	—	—	—	—	—	—	—
30D	4310192601	(U)4310192901 (L)4310193001	(U)4310192901 (L)4310193001	4310192801	WS383	—	—
30E	4310192601	—	—	—	—	—	—
30J	7400TC30J	7400RU30J 7400RL30J	7400FU30J 7400FLNP30J	7400LR30J	7400WS30J	—	—
31D	—	—	—	—	—	—	—
31E	—	—	—	—	—	—	—
31J	7400TC31J	7400RU31J 7400RL31J	7400FU31J 7400FLNP31J	7400LR31J	7400WS31J	—	—

Pintura para retoques: Número de catálogo PK49SP

© 1992–2018 Schneider Electric Reservados todos los derechos

Consulte la tabla 5 para obtener información sobre los kits de zapatas de transformador disponibles. Para obtener más información acerca de los conectores de terminales, consulte la etiqueta en el reverso del panel frontal del transformador. Vea la figura 36.

Tabla 5: Zapatas de compresión VERSAtile™ y tornillo de sujeción mecánica —zapatas AL9CU recomendadas por UL

Valor nominal del transformador en kVA	No. de catálogo del kit	Zapatas de terminal		Gama de conductores de aluminio o cobre (AWG o kcmil)	Herrajes incluidos	
		Cont.	Número de catálogo		Cont.	Tornillos de casquete
Zapatas de compresión del equipo VERSAtile						
15–37 1/2 1Ø	VCELSK1	8	VCEL02114S1	#8–1/0	8	1/4 pulg x 1 pulg
15–45 3Ø		5	VCEL030516H1	#4–300 kcmil	1	1/4 pulg x 2 pulg
50–75 1Ø	VCELSK2	13	VCEL030516H1	#4–300 kcmil	8	1/4 pulg x 1 pulg
75–112 1/2 3Ø					8	1/4 pulg x 2 pulg
100-167 1Ø 150-300 3Ø	VCELSK3	3 26	VCEL030516H1	#4–300 kcmil	3	1/4 pulg x 3/4 pulg
			VCEL07512H1	#500–750 kcmil de Al #500 kcmil de Cu	16	3/8 pulg x 2 pulg
500 3Ø	VCELSK4	34	VCEL07512H1	#500–750 kcmil de Al #500 kcmil de Cu	21	3/8 pulg x 2 pulg

NOTA: Consulte la norma 486A de UL para obtener los valores de par de apriete de los herrajes de conexión de las zapatas.

Cada unidad incluye dos placas de datos. Vea la figura 36. Una en la cubierta frontal que es requerida por las normas, la segunda en el núcleo y bobina, proporcionando información sobre la instalación dentro de la unidad. La segunda placa lleva también el reconocimiento UL (UR) para el núcleo y la bobina, permitiendo que se desmonte el gabinete y que se instale el dispositivo en el equipo.

Figura 36: Ejemplo de placa de datos

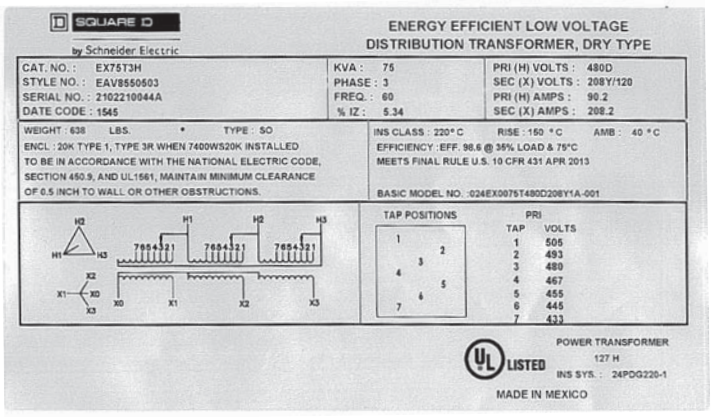

En la cubierta frontal

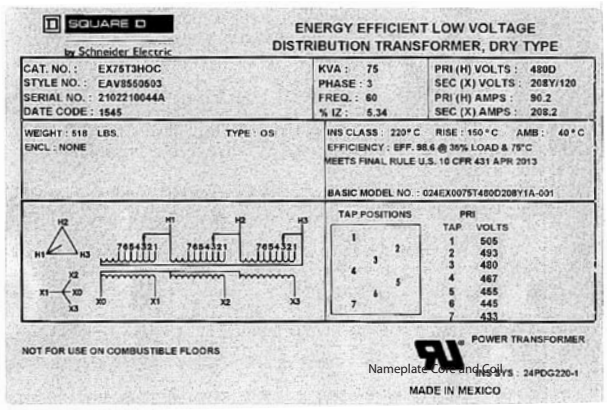

En el núcleo y la bobina

© 1992–2018 Schneider Electric Reservados todos los derechos

ESPAÑOL

ESPAÑOL

Consulte la tabla 6 para obtener información sobre los kits de Square D para los siguientes transformadores tipo seco:

- Primario de una fase, secundario de una fase, primario en delta de tres fases, secundario de tres fases
- Primario y secundario de una fase, secundario en estrella de tres fases, delta de tres fases con derivación central

Tabla 6: Kits de zapatas marca Square D para transformadores tipo seco

Número de catálogo	Zapatas por kit	Tamaño de conductor	Tornillos de casquete	Gama de corriente	Zapatas de conexión a tierra por kit	Tamaño de conductor	Zapatas de unión por kit	Tamaño de conductor
Primario de una fase, secundario de una fase, primario en delta de tres fases, secundario de tres fases								
DASKP100	3	1/0–14 trenzado	1/4 pulg x 1 pulg	Hasta un máximo de 100 A	No aplicable	No aplicable	No aplicable	No aplicable
DASKP250	3	350 kcmil–6 trenzado	3/8 pulg x 2 pulg	101-250 A				
DASKP400	3	600 kcmil–4 trenzado (2) 250 kcmil–1/0 trenzado	3/8 pulg x 2 pulg	201-400 A				
DASKP600	6	600 kcmil–4 trenzado (2) 250 kcmil–1/0 trenzado	3/8 pulg x 2 pulg	601-800 A				
DASKP1000	9	600 kcmil–2 trenzado	3/8 pulg x 2 pulg	601-800 A				
DASKP1200	12	600 kcmil–2 trenzado	3/8 pulg x 2 pulg	801–1200 A				
Primario y secundario de una fase, secundario en estrella de tres fases, delta de tres fases con derivación central								
DASKGS100	5	1/0–14 trenzado	1/4 pulg x 1 pulg	Hasta un máximo de 100 A	1	(4) 2/0–14 trenzado	1	2–14 trenzado
DASKGS250	5	350 kcmil–6 trenzado	3/8 pulg x 2 pulg	101-250 A	1	(4) 2/0–14 trenzado	1	2–14 trenzado
DASKGS400	5	600 kcmil–4 trenzado (2) 250 kcmil–1/0 trenzado	3/8 pulg x 2 pulg	201-400 A	1	(4) 2/0–14 trenzado	1	1/0–14 trenzado
DASKGS600	10	600 kcmil–4 trenzado (2) 250 kcmil–1/0 trenzado	3/8 pulg x 2 pulg	601-800 A	1	(4) 350 kcmil–6 trenzado	1	250 kcmil–6 trenzado
DASKGS1000	15	600 kcmil–2 trenzado	3/8 pulg x 2 pulg	601-800 A	1	(4) 350 kcmil–6 trenzado	1	250 kcmil–6 trenzado
DASKGS1200	20	600 kcmil–2 trenzado	3/8 pulg x 2 pulg	801–1200 A	1	(4) 350 kcmil–6 trenzado	1	250 kcmil–6 trenzado
DASKGS2000	25	600 kcmil–2 trenzado	3/8 pulg x 2 pulg	1201-2000 A	1	(4) 350 kcmil–6 trenzado	1	250 kcmil–6 trenzado

NOTA: Las terminales no vienen con las unidades de transformador. Éstas deben adquirirse por separado.

Consulte la norma 486A de UL para obtener los valores de par de apriete de los herrajes de conexión de las zapatas.

© 1992–2018 Schneider Electric Reservados todos los derechos

Consulte la tabla 7 para obtener información sobre las zapatas de terminales mecánicas y de compresión y el tamaño de cable apropiado para los transformadores tipo seco.

NOTA: Todas las terminales aceptan zapatas NEMA de dos agujero.

Tabla 7: Tamaños de zapatas terminales mecánicas y de compresión, y tamaño de conductor

kVA	300 V y mayores		Por debajo de 300 V	
	Zapatas terminales mecánicas	Zapatas terminales de compresión	Zapatas terminales mecánicas	Zapatas terminales de compresión
15	2/0–14 AWG	(1) #12–10 AWG (1) #8–#1/0 AWG	2/0–14 AWG	(1) #8-#1/0 AWG
30	2/0–14 AWG	(1) #8–#1/0 AWG	350 kcmil–6 AWG	(1) #8-#1/0 AWG (1) #4-300 kcmil (1) 250-350 kcmil
45	2/0–14 AWG 350 kcmil–6 AWG	(1) #8–#1/0 AWG (1) #4-300 kcmil	350 kcmil–6 AWG (1) 600 kcmil–4 AWG o (2) igual a 250 kcmil-1/0 AWG	(1) 250–350kcmil (1) #2/0-500 kcmil (2) #4-300 kcmil
75	2/0–14 AWG 350 kcmil–6 AWG	(1) #8–#1/0 AWG (1) #4-300 kcmil (1) 250-350 kcmil	(1) 600 kcmil–4 AWG o (2) igual a 250 kcmil-1/0 AWG	(2) #2/0-500 kcmil (1) 400–600 kcmil Al (2) #4-300 kcmil (2) 250-350 kcmil
112.5	350 kcmil–6 AWG (1) 600 kcmil–4 AWG o (2) igual a 250 kcmil-1/0 AWG	(1) 250 kcmil–350 kcmil (1) #2/0-500 kcmil (2) #4-300 kcmil	(2) 350 kcmil–6 AWG (2) 600 kcmil–2 AWG	(3) 250-350 kcmil (3) #4-300 kcmil (2) 400–600 kcmil Al
150	(1) 600 kcmil–4 AWG o (2) igual a 250 kcmil-1/0 AWG	(1) 250-350 kcmil (2) #4-300 kcmil	(3) 350 kcmil–6 AWG (2) 600 kcmil–2 AWG	(3) #2/0-500 kcmil (3) #4-300 kcmil (3) 400–600 kcmil Al (4) 250-350 kcmil
225	1) 600 kcmil–2 AWG (2) 600 kcmil–2 AWG	(2) #2/0-500 kcmil (2) 400–600 kcmil Al (2) #4-300 kcmil	(3) 600 kcmil–2 AWG	(4) #4-300 kcmil (4) #2/0-500 kcmil
300	(2) 600 kcmil–2 AWG	(3) 250-350 kcmil (3) #2/0-500 kcmil (3) 400–600 kcmil Al	(4) 600 kcmil–2 AWG	(6) #2/0-500 kcmil (6) 400–600 kcmil Al
500	(3) 600 kcmil–2 AWG	(4) #4-300 kcmil (4) #2/0-500 kcmil	(6) 600 kcmil–2 AWG	(9) #2/0–500kcmil (9) 400–600 kcmil Al
750	(4) 600 kcmil–2 AWG	(6) #2/0-500 kcmil (6) 400–600 kcmil Al	(9) 600 kcmil–2 AWG	(15) #2/0-500 kcmil (15) 400–600 kcmil Al

NOTA: Todas las terminales aceptan zapatas NEMA de dos agujero.

Consulte la tabla 8 para obtener información sobre los kits de barras de tierra marca Square D

Tabla 8: Kits de barras de tierra marca Square D

Número de catálogo	Zapatas de conexión a tierra por kit	Tamaño de conductor
DASKGTB100400	1	(4) 2/0–14 trenzado
DASKGTB6002000	1	(4) 350 KCMIL–6 trenzado

© 1992–2018 Schneider Electric Reservados todos los derechos

Transformadores tipo seco
Boletín de instrucciones

ESPAÑOL

Importado en México por:
Schneider Electric México, S.A. de C.V.
Av. Ejercito Nacional No. 904
Col. Palmas, Polanco 11560 México, D.F.
55-5804-5000
www.schneider-electric.com.mx

Solamente el personal calificado deberá instalar, hacer funcionar y prestar servicios de mantenimiento al equipo eléctrico. Schneider Electric no asume responsabilidad alguna por las consecuencias emergentes de la utilización de este material.

© 1992–2015 Schneider Electric Reservados todos los derechos
Schneider Electric y Square D son marcas comerciales de Schneider Electric Industries SAS o sus compañías afiliadas. Todas las otras marcas comerciales son propiedad de sus respectivos propietarios.

43006-850-01 Rev. 03, 07/2018
Reemplaza 43006-850-01 Rev 02, 11/2015

Transformateurs de type sec
1000 V et moins
Classe 7400

Directives d’utilisation

43006-850-01
Rév. 03, 07/2018

À conserver pour usage ultérieur.

FRANÇAIS

SQUARE D™
by Schneider Electric

Catégories de dangers et symboles spéciaux

Lisez attentivement ces directives et examinez l'appareil pour vous familiariser avec son fonctionnement avant de faire son installation ou son entretien. Les messages spéciaux suivants peuvent apparaître dans les présentes directives ou sur l'appareil pour avertir l'utilisateur de dangers ou pour attirer l'attention sur des informations qui clarifient ou simplifient une procédure.

L'ajout d'un de ces deux symboles à une étiquette de sécurité de « Danger » ou d'« Avertissement » indique qu'un danger électrique existe et qu'il peut entraîner des blessures corporelles si les directives ne sont pas respectées.

Ceci est le symbole d'alerte de sécurité. Il est utilisé pour vous alerter de dangers de blessures corporelles. Veuillez vous conformer à tous les messages de sécurité qui suivent ce symbole pour éviter une blessure ou la mort.

⚠ DANGER

DANGER indique une situation de danger imminent qui, si elle n'est pas évitée, **entraînera** la mort ou des blessures graves.

⚠ AVERTISSEMENT

AVERTISSEMENT indique une situation de danger potentiel qui, si elle n'est pas évitée, **peut entraîner** la mort ou des blessures graves.

⚠ ATTENTION

ATTENTION indique une situation de danger potentiel qui, si elle n'est pas évitée, peut entraîner des blessures mineures ou modérées.

AVIS

AVIS est utilisé pour aborder des pratiques ne concernant pas les blessures. Le symbole d'alerte de sécurité n'est pas utilisé avec ce mot d'information.

REMARQUE : Fournit des renseignements complémentaires pour clarifier ou simplifier une procédure.

Veuillez noter

Seul un personnel qualifié doit effectuer l'installation, l'utilisation, l'entretien et la maintenance du matériel électrique. Schneider Electric n'assume aucune responsabilité des conséquences éventuelles découlant de l'utilisation de cette documentation.

Table des matières

SECTION 1: INTRODUCTION 7

SECTION 2: MESURES DE SÉCURITÉ 9

Codes et normes 9
Déclaration exonératoire 10

SECTION 3: RÉCEPTION, MANUTENTION ET ENTREPOSAGE 11

Réception 11
Manutention 12
Manutention à l'aide de grues ou chariots élévateurs, transpalettes ou chariots élévateurs à fourche 12
Manutention avec une grue : Utilisation de câbles, chaînes ou sangles . 13
Manutention d'armoires de types D, H et K après retrait de la palette d'expédition 16
Entreposage 17

SECTION 4: INSTALLATION 19

Localiser/mettre en place les transformateurs ventilés et non ventilés 19
Tous les types d'armoires (D, E, F, H, K et J) 22
Mise à la terre 26
Qualifications sismiques 27
Contrôle des bruits/vibrations 27
Armoire de type K 28
Armoires de types D, E, H et J 28
Raccordements électriques 29
Vérifications et essais avant la mise en service/mise sous tension 33
Nettoyage 33
Vérifications visuelles et mécaniques 33
Essais électriques 34

SECTION 5: FONCTIONNEMENT 35

Effets de l'humidité 35
Température de l'armoire 36
Avant de mettre les transformateurs sous tension 36
Mise sous tension du transformateur 36

SECTION 6: ENTRETIEN 39

Exécution de vérifications visuelles et mécaniques 39
Fréquence 39
Évènements graves, environnementaux ou spéciaux 40
Nettoyage 40
Raccordements et surfaces de contact 40
Armoires, enroulements et isolateurs 40
Exécution d'essais électriques 41
Résistance des contacts 41
Résistance de l’isolation 41
Résistance des enroulements 42
Mise à la terre et à la masse 42
Rapport des spires 42

FRANÇAIS

© 1992–2018 Schneider Electric Tous droits réservés

Coussinets isolants antibruit 42
Conduits de refroidissement des bobines 42
Bornes 42

SECTION 7: PIÈCES DE RECHANGE ET ACCESSOIRES 43

FRANÇAIS

© 1992–2018 Schneider Electric Tous droits réservés

Liste des figures

Figure 1 : Transformateurs écoénergétiques 2016 (EX) 7
Figure 2 : Transformateurs écoénergétiques 2016 (EX) 7
Figure 3 : Noyau et bobine ouverts 8
Figure 4 : Transformateur ventilé écoénergétique (EE) 8
Figure 5 : Non linéaire (NL, NP, NLP) et d'atténuation harmonique (HM) 8
Figure 6 : Transformateur non ventilé 8
Figure 7 : Manutention avec un chariot élévateur : Lames ou fourches placées sous le transformateur entier (palette d'expédition attachée) 12
Figure 8 : Levage à deux points : Angles de tirage des câbles (pas moins de 60 degrés à partir de l'horizontale) 13
Figure 9 : Levage à deux points : Manutention à l'aide de chaînes et crochets à angles (pas moins de 60 degrés à partir de l'horizontale) 14
Figure 10 : Levage à quatre points : Manutention à l'aide de chaînes et crochets par les quatre coins (pas moins de 60 degrés à partir de l'horizontale) 15
Figure 11 : Levage à quatre points : Manutention à l'aide d'une sangle et de crochets (pas moins de 60 degrés à partir de l'horizontale) 16
Figure 12 : Manutention à l'aide d'un transpalette : Armoires de types D, E, H et K après retrait de la palette d'expédition 16
Figure 13 : Exemple de plaque signalétique 19
Figure 14 : Distance minimale marquée sur la plaque signalétique (NEC 450.9 – É.-U.) 20
Figure 15 : Montage : Armoires de types D, H, K et E 20
Figure 16 : Armoires D, H, K et E 20
Figure 17 : Montage de l'armoire de type J : Ventilée 21
Figure 18 : Support de montage au sol Armoire de type K 21
Figure 19 : Support de montage au sol Armoire de type K 21
Figure 20 : Transformateurs installés à l'intérieur : NEC 450.21 (É.-U.), exceptions A ou B de l'exemple de plaque signalétique 22
Figure 21 : Transformateur à montage mural 23
Figure 22 : Transformateur à montage avec trapèze (au plafond) 24
Figure 23 : Kits d'armoire de type 3R 25
Figure 24 : Bornier de m.à.l.t. à quatre conducteurs 26
Figure 25 : Étiquette de desserrage des écrous d'un tour complet (quatre endroits) 27
Figure 26 : Flottaison du transformateur sur les coussinets isolants/amortisseurs de sons 27
Figure 27 : Armoire de type K : Boulons accessibles par l'avant du transformateur 28
Figure 28 : Point d'accès : Armoires de types D, E, H et K 29
Figure 29 : Point d'accès : Armoire de type J : 30
Figure 30 : Étiquette pour montrer l'emplacement supérieur sur les armoires (points d'accès sous la carte de bornes supérieure) 30
Figure 31 : Schéma des phases, emplacements des prises et tension nominale marqués sur la plaque signalétique 31

© 1992–2018 Schneider Electric Tous droits réservés

Figure 32 : Étiquette d'attention pour les transformateurs raccordés triangle-étoile ou étoile-triangle 32
Figure 33 : Retrait des attaches temporaires 36
Figure 34 : Assemblage éclaté pour le transformateur écoénergétique EX75T3H avec un couvercle avant d'armoire de type 20K 43
Figure 35 : Assemblage éclaté pour le transformateur écoénergétique EX300T3H avec un couvercle avant d'armoire de type 25J 43
Figure 36 : Exemple de plaques signalétiques 45

Liste des tableaux

Tableau 1 : Dégagements de l'armoire 22
Tableau 2 : Conversion de montage au sol à montage mural (à l'aide de kits d'usine) 23
Tableau 3 : Conversion de montage au sol à montage avec trapèze (au plafond) (à l'aide de kits d'usine) 24
Tableau 4 : Couvercles, panneaux latéraux, protections contre les intempéries et supports de montage 44
Tableau 5 : Cosses à compression VERSAtile[MC] et vis de pression mécaniques— cosses inscrites UL AL9CU 45
Tableau 6 : Kits des cosses Square D pour transformateurs de type sec 46
Tableau 7 : Taille des bornes, cosses mécaniques et à compression et calibres des fils 47
Tableau 8 : Kits de barres-bus de m.à.l.t. Square D 47

© 1992–2018 Schneider Electric Tous droits réservés

Section 1—Introduction

Ce bulletin fournit les directives d'installation, de fonctionnement et d'entretien des transformateurs de type sec de 1 000 V et moins destinés à des applications commerciales et industrielles.

REMARQUE : Ces directives d'utilisation ne doivent être utilisées que par un personnel qualifié.

Les familles suivantes de transformateurs de type sec sont comprises dans ces directives d'utilisation. Des transformateurs typiques sont représentés dans les figures 1 à 6.

- Transformateurs de distribution basse tension, triphasés et monophasés
  - — À usage général—50 et 60 Hz
  - — Écoénergétique (EE)—60 Hz
  - — Écoénergétique 2016 (EX)—60 Hz
  - — Disponibilité non linéaire (NL, NP ou NLP)—50 et 60 Hz
  - — Transformateurs d'atténuation harmonique (HM)—50 et 60 Hz
  - — Noyau et bobine ouverts (OC)
- Transformateurs d'isolement de variateur (DIT)
- Transformateurs non ventilés (NV)

FRANÇAIS

Figure 1 : Transformateurs écoénergétiques 2016 (EX)

Figure 2 : Transformateurs écoénergétiques 2016 (EX)

© 1992–2018 Schneider Electric Tous droits réservés

Figure 3 : Noyau et bobine ouverts

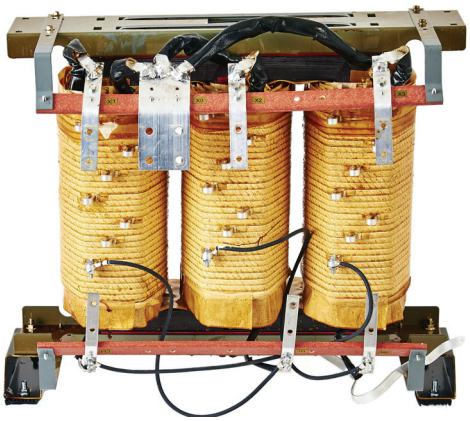

Figure 4 : Transformateur ventilé écoénergétique (EE)

Figure 5 : Non linéaire (NL, NP, NLP) et d'atténuation harmonique (HM)

Figure 6 : Transformateur non ventilé

© 1992–2018 Schneider Electric Tous droits réservés

Section 2—Mesures de sécurité

⚠ DANGER

RISQUE D'ÉLECTROCUTION, D'EXPLOSION OU ÉCLAIR D'ARC ÉLECTRIQUE

- Portez un équipement de protection personnelle (ÉPP) approprié et observez les méthodes de travail électrique sécuritaire. Voir NFPA 70E, NOM-029-STPS-2011 ou CSA Z462.
- Seul un personnel qualifié doit effectuer l'installation et l'entretien de cet appareil.
- N'entreprenez ce travail qu'après avoir lu et compris toutes les explications contenues dans ces directives.
- Coupez toutes les alimentations à cet appareil avant d'y travailler.
- Utilisez toujours un dispositif de détection de tension à valeur nominale appropriée pour vous assurer que l'alimentation est coupée.
- Avant d'effectuer des inspections visuelles, des essais ou des procédures d'entretien sur cet appareil, déconnectez toutes les sources d'alimentation. Présumez que tous les circuits sont sous tension tant qu'ils n'ont pas été complètement mis hors tension, vérifiés et étiquetés. Faites particulièrement attention à l'agencement du système d'alimentation. Considérez toutes les sources d'alimentation, y compris la possibilité de rétro-alimentation.
- Observez toujours toutes les procédures d'interverrouillage et d'étiquetage selon la réglementation OSHA.
- Inspectez soigneusement la zone de travail et enlevez tous les outils et objets laissés à l'intérieur de l'appareil.
- Replacez tous les dispositifs, les portes et les couvercles avant de mettre l'appareil sous tension.
- Les explications données dans ces directives présument que le client a pris ces mesures avant d'effectuer un entretien ou des essais.

Si ces directives ne sont pas respectées, cela entraînera la mort ou des blessures graves.

AVERTISSEMENT: Ce produit peut vous exposer à des agents chimiques, y compris Phényle Glycidyle, identifiés par l'État de Californie comme pouvant causer le cancer. Pour de plus amples informations, prière de consulter www.P65Warnings.ca.gov.

AVERTISSEMENT: Ce produit peut vous exposer à des agents chimiques, y compris Méthanol, identifiés par l'État de Californie comme pouvant causer des malformations congénitales ou autres anomalies de reproduction. Pour de plus amples informations, prière de consulter www.P65Warnings.ca.gov.

Codes et normes

Les utilisateurs de ce document ont la responsabilité d'employer un personnel qualifié en électricité et d'observer les codes de l'électricité en vigueur aux niveaux fédéral, d'état et local lors de l'installation d'appareils et systèmes électriques.

© 1992–2015 Schneider Electric Tous droits réservés

Ce document adhère aux codes et normes tels que précisés par l'association nationale de protection contre les incendies (National Fire Protection Association® -NFPA). Se reporter à NFPA 70 : Édition 2014 du Code national de l'électricité (É.-U.) (NEC®).

Déclaration exonératoire

Seul un personnel qualifié doit effectuer l'installation, l'utilisation, l'entretien et la maintenance du matériel électrique. Schneider Electric n'assume aucune responsabilité des conséquences éventuelles découlant de l'utilisation de cette documentation.

© 1992–2015 Schneider Electric Tous droits réservés

Section 3—Réception, manutention et entreposage

Réception

1. Dès la réception, retirer l'emballage.
   - — Inspecter immédiatement le nouveau transformateur pour détecter d'éventuels dommages d'expédition.
   - — Se reporter à Pièces de rechange et accessoires à la page 43 pour les pièces de rechange, les accessoires (par ex., peinture pour retouche) et les pièces supplémentaires pour des dommages mineurs.
2. Comparer la liste d'emballage et la plaque signalétique du produit.
   - — S'assurer que la commande et l'expédition correspondent et que l'envoi est complet.

   REMARQUE : Observer les modalités de vente de Schneider Electric en cas de pièces manquantes et d’erreurs.
3. Remballer les transformateurs pour leur entreposage s'ils ne doivent pas être installés immédiatement.
   - — Couvrir toutes les ouvertures de ventilation à titre de protection contre toute exposition à l'humidité, la poussière et aux polluants.
   - — Conserver les matériaux d'emballage intacts jusqu'à ce que les transformateurs soient prêts à être installés.
4. Se reporter à « Modalités de ventes » pour les détails au sujet des réclamations pour des pièces manquantes et autres erreurs Contacter votre distributeur local de Schneider Electric pour de l'aide supplémentaire.

© 1992–2018 Schneider Electric Tous droits réservés

Manutention

Manier les transformateurs avec soin afin d'éviter tout endommagement. Éviter de soumettre les transformateurs à des impacts, cahots, secousses et à une manutention brutale. S'assurer que les transformateurs sont expédiés en position verticale. Chaque fois que possible, transporter les transformateurs vers le site d'installation alors qu'ils se trouvent encore montés sur les palettes d'expédition.

Vérifier si le poids du transformateur ne dépasse pas la capacité nominale de l'appareil de manutention à utiliser.

Manutention à l'aide de grues ou chariots élévateurs, transpalettes ou chariots élévateurs à fourche

Des précautions extrêmes doivent être prises lors du déplacement de transformateurs par le bas. Voir la figure 7.

- Prendre soin de répartir le poids lors du transport de transformateurs à l'aide de grues, chariots élévateurs, transpalettes ou chariots élévateurs à fourche.
- N'employer des chariots manuels ou élévateurs que lorsque les lames ou fourches sont suffisamment longues pour passer complètement sous l'armoire du transformateur ou la palette d'expédition. Un écart plus large entre les fourches est préférable pour répartir le poids de l'unité de façon égale afin d'assurer une meilleure stabilité.

Figure 7 : Manutention avec un chariot élévateur : Lames ou fourches placées sous le transformateur entier (palette d'expédition attachée)

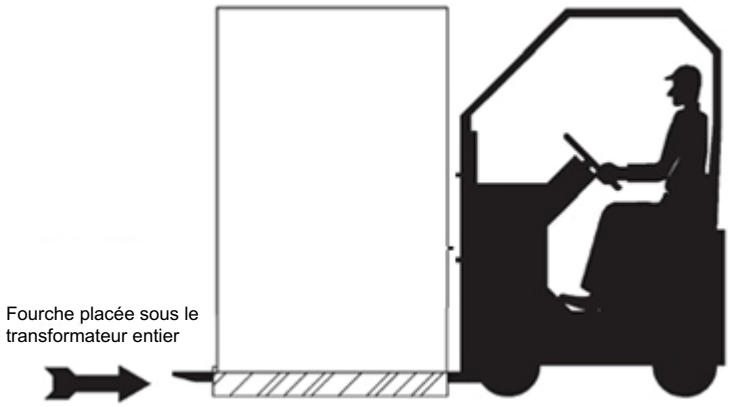

FRANÇAIS

© 1992–2018 Schneider Electric Tous droits réservés

Manutention avec une grue : Utilisation de câbles, chaînes ou sangles

Lors du levage du transformateur par le haut, l'emploi d'entretoises avec des câbles ou des chaînes est toléré. Cela contribuera à éviter l'endommagement de l'armoire ou de l'appareil.

L'armoire peut être retirée pour permettre le passage des unités par des petites ouvertures, le levage avec les mêmes moyens que ceux représentés à la figure 8 à la page 13, à la figure 9 à la page 14 et aux figures 10 et 11 à la page 16. Se reporter aux figures 34 et 35 dans Pièces de rechange et accessoires à la page 43 pour les vues éclatées des pièces et accessoires.

Assurer que les angles de tirage des câbles de levage ne soient pas inférieurs à 60 degrés à partir de l'horizontale. Voir la figure 8 à la page 13.

Figure 8 : Levage à deux points : Angles de tirage des câbles (pas moins de 60 degrés à partir de l'horizontale)

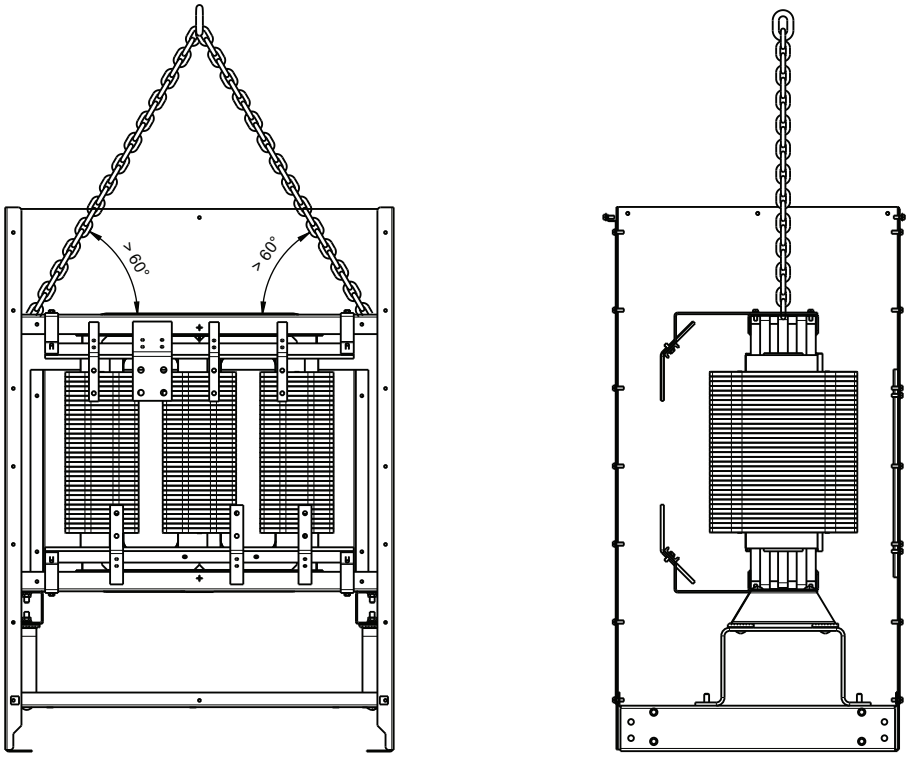

FRANÇAIS

© 1992–2018 Schneider Electric Tous droits réservés

Se reporter aux figures 9 à 11 aux pages 14 à 16 pour d'autres options possibles de levage et de manutention.

Figure 9 : Levage à deux points : Manutention à l'aide de chaînes et crochets à angles (pas moins de 60 degrés à partir de l'horizontale)

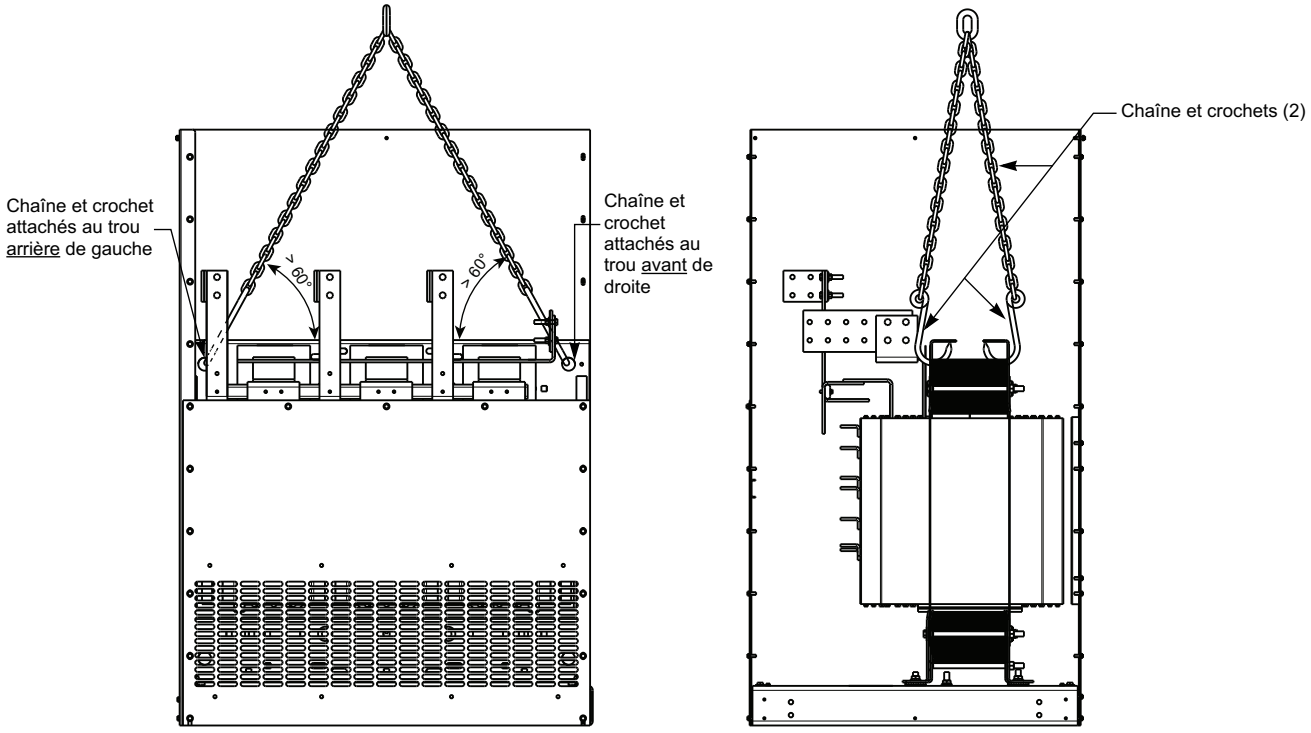

Levage à deux points à l'aide de chaînes et crochets : Support du noyau supérieur, trou avant et du côté droit. Support arrière, trou arrière et du côté gauche

© 1992–2018 Schneider Electric Tous droits réservés

Figure 10 : Levage à quatre points : Manutention à l'aide de chaînes et crochets par les quatre coins (pas moins de 60 degrés à partir de l'horizontale)

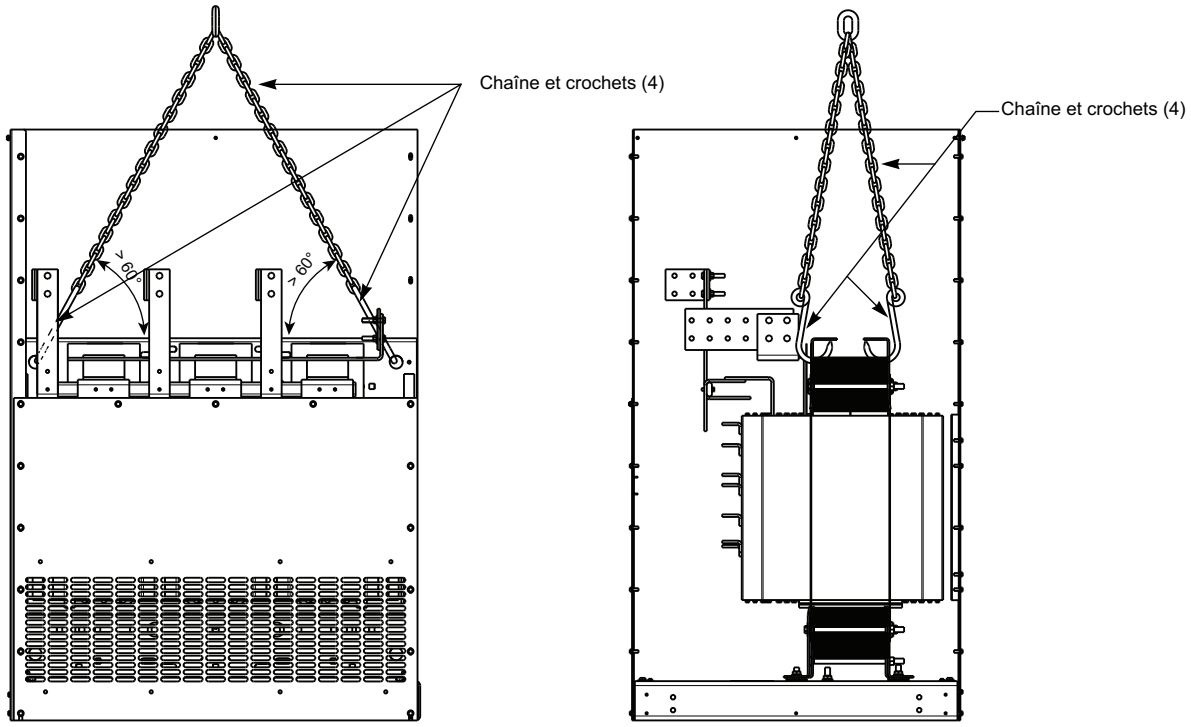

Vue avant **Vue latérale**

Levage à quatre points : Les crochets sont dans les trous avant et arrière du support du noyau (4), avec les chaînes soulevant les crochets.

FRANÇAIS

© 1992–2018 Schneider Electric Tous droits réservés

Figure 11 : Levage à quatre points : Manutention à l'aide d'une sangle et de crochets (pas moins de 60 degrés à partir de l'horizontale)

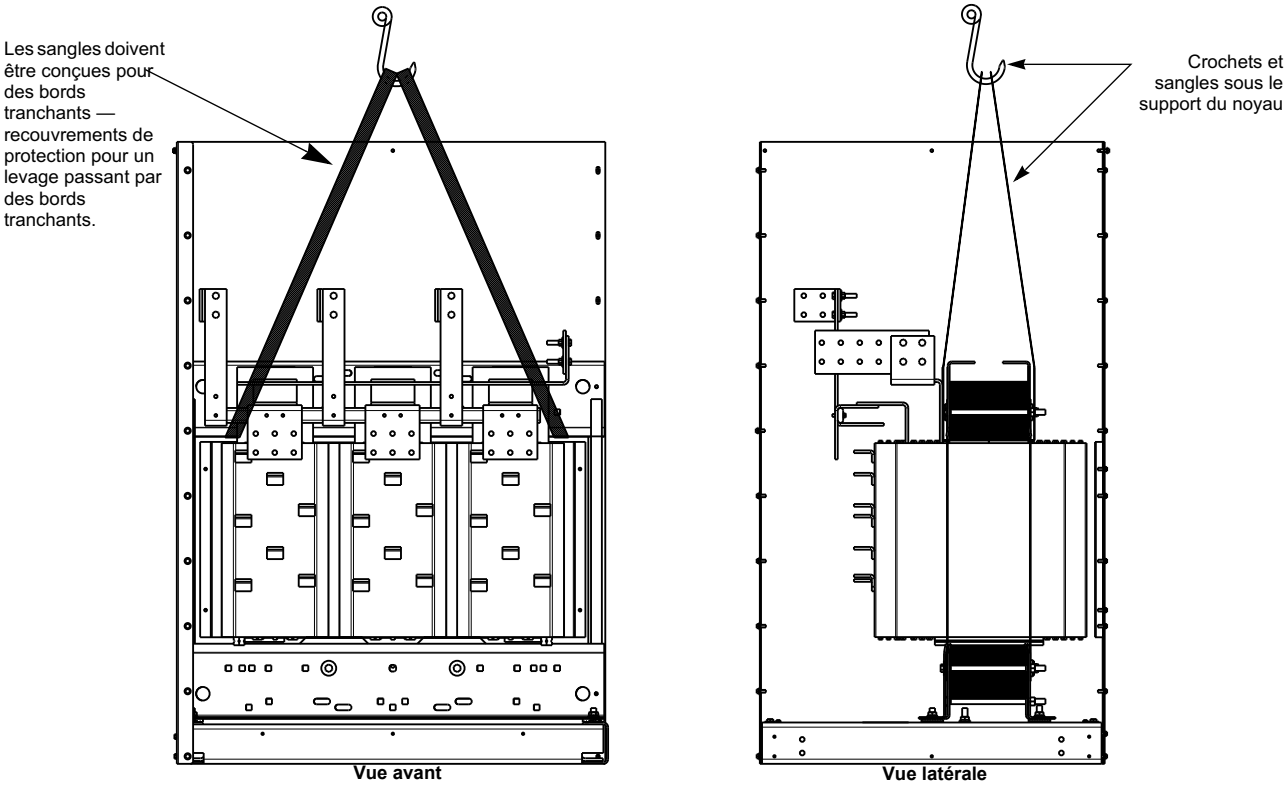

Levage à quatre points : Les sangles se trouvent sous les supports du noyau, les sangles de l'avant à l'arrière se rejoignant au haut avec un crochet. Utiliser des sangles ayant un recouvrement de protection, les colliers du noyau sont tranchants.

Manutention d'armoires de types D, H et K après retrait de la palette d'expédition

Les chariots de manutention et élévateurs peuvent saisir et déplacer le transformateur au moyen des ouvertures avant et arrière, sous le bas de la base. Voir la figure 12. Suivre les mêmes directives de manutention (à partir de la page 12) comme si la palette était encore attachée.

Figure 12 : Manutention à l'aide d'un transpalette : Armoires de types D, E, H et K après retrait de la palette d'expédition

© 1992–2018 Schneider Electric Tous droits réservés

Entreposage

Laisser en place le matériau d'emballage qui contient le transformateur jusqu'à ce que l'unité soit prête pour sa mise en place définitive et son câblage. Cela contribuera à protéger l'armoire et les pièces internes du transformateur de la contamination par la crasse, l'eau et l'humidité et de tout endommagement physique pendant l'entreposage. Prendre des mesures supplémentaires pour protéger le transformateur lorsque le matériau d'emballage d'origine ne peut pas être conservé.

Entreposer les transformateurs à l'intérieur dans un bâtiment propre, sec et chauffé, avec des températures uniformes et une circulation d'air adéquate. Si nécessaire, installer un chauffage électrique pour maintenir une température uniforme au-dessus de la température ambiante afin d'empêcher la condensation.

Protéger les transformateurs des conditions météorologiques et de la contamination quand il n'est pas possible de les entreposer à l'intérieur.

Avant de mettre le transformateur sous tension, effectuer les points dans Vérifications et essais avant la mise en service/mise sous tension ainsi que les points suivants :

1. Mesurer la résistance de l'isolation si l'entreposage dans un environnement contrôlé n'est pas faisable. Se reporter à la section Résistance de l’isolation à la page 41.
2. Sécher l'unité si les niveaux des essais sont inacceptables :
    a. Utiliser deux appareils de chauffage ou lampes par bobine à 120 V, 50 W, pour appliquer un chauffage externe aux bobines.
    b. Monter l'appareil de chauffage ou la lampe directement sous les bobines situées à l'avant et à l'arrière du noyau.

REMARQUE : Les transformateurs extérieurs ne résistent pas aux conditions météorologiques tant qu'ils ne sont pas correctement et complètement installés et mis sous tension. Traiter les transformateurs extérieurs exactement de la même manière que les transformateurs intérieurs jusqu'après leur installation.

© 1992–2018 Schneider Electric Tous droits réservés

© 1992–2018 Schneider Electric Tous droits réservés

Section 4—Installation

Localiser/mettre en place les transformateurs ventilés et non ventilés

1. Enlever tous les matériaux d'emballage. Maintenir la palette d'expédition attachée au transformateur pour faciliter le déplacement de l'unité vers son emplacement d'installation définitif.
2. S'assurer que la plaque signalétique corresponde à la description des plans d'agencement du bâtiment (kVA, tensions primaire et secondaire, etc.). Voir la figure 13.

Figure 13 : Exemple de plaque signalétique

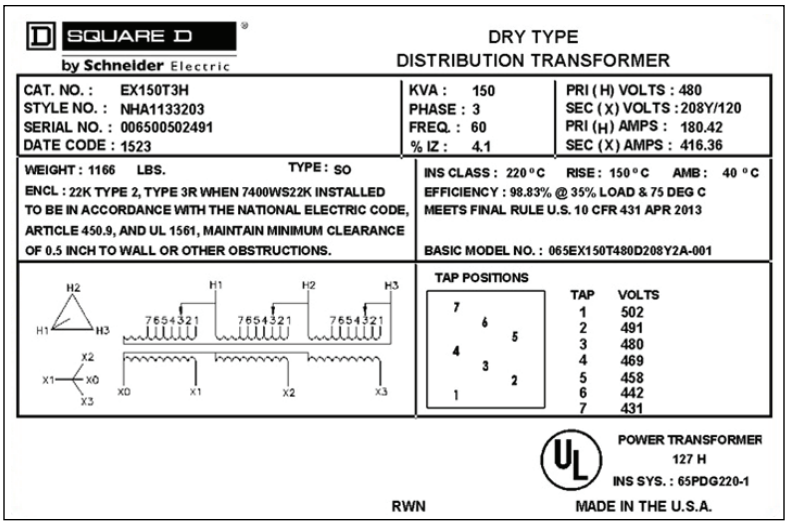

3. Placer l'unité en fonction du plan d'agencement du bâtiment.
4. Vérifier si l'environnement convient au type d'armoire.
5. S'assurer que l'emplacement est facilement accessible au personnel qualifié (selon le NEC 450.13 - É.-U.). Les unités placées en plein air peuvent être montées sur des murs, des colonnes ou encore fixées à des structures.
6. Assurer une ventilation adéquate car il est essentiel que les transformateurs reçoivent une ventilation fraiche correcte. Se reporter au code national de l'électricité (NEC®- É.-U.), article 450.
   - La distance minimale est marquée sur la plaque signalétique (NEC 450.9 – É.-U.). Voir la figure 14 à la page 20.
   - La distance minimale varie selon le type d'armoire. Voir le plan approuvé de Schneider Electric pour la distance minimale.
   - De l'air propre, sec, est désirable.
   - De l'air filtré peut réduire l'entretien si l'emplacement du transformateur présente un problème.

FRANÇAIS

© 1992–2018 Schneider Electric Tous droits réservés

Figure 14 : Distance minimale marquée sur la plaque signalétique (NEC 450.9 – É.-U.)

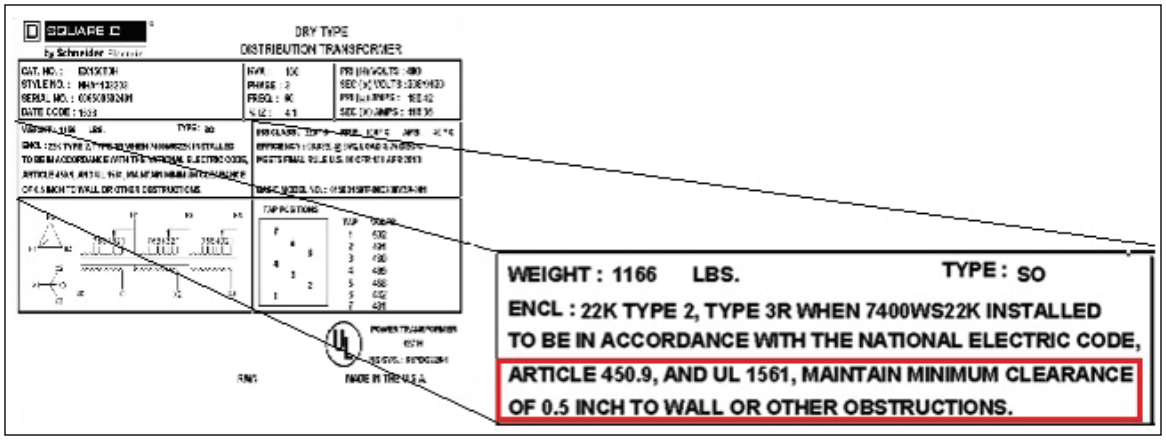

7. Monter les accessoires avant d'installer le transformateur en cas d'utilisation d'un montage sur un mur ou plafond (trapèze).
   a. Noter les emplacements des quatre trous de montage à la base de chaque armoire.
   b. Trouver les dimensions réelles sur les plans approuvés de Schneider Electric.
   c. Fixer les unités en suivant l'une des deux méthodes de montage : sans supports de montage au sol (figures 15, 16 et 17 à la page 21) ou avec supports de montage au sol (figures 18 et 19 à la page 21).
8. Placer le transformateur à son emplacement définitif.

Figure 15 : Montage : Armoires de types D, H, K et E

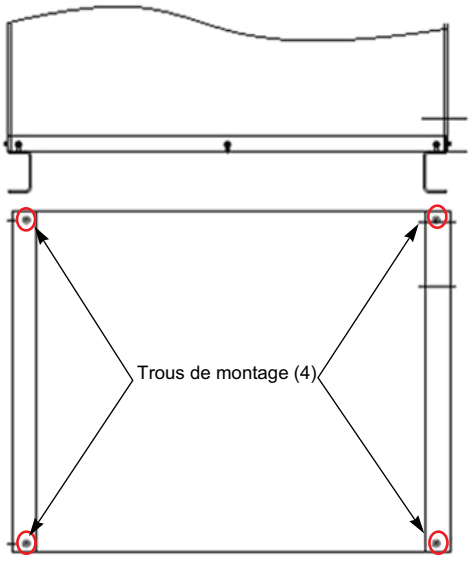

Figure 16 : Armoires D, H, K et E

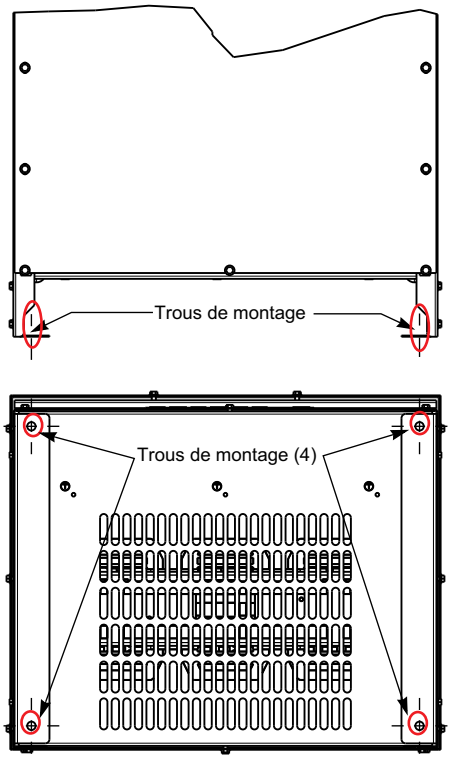

© 1992–2018 Schneider Electric Tous droits réservés

Figure 17 : Montage de l'armoire de type J : Ventilée

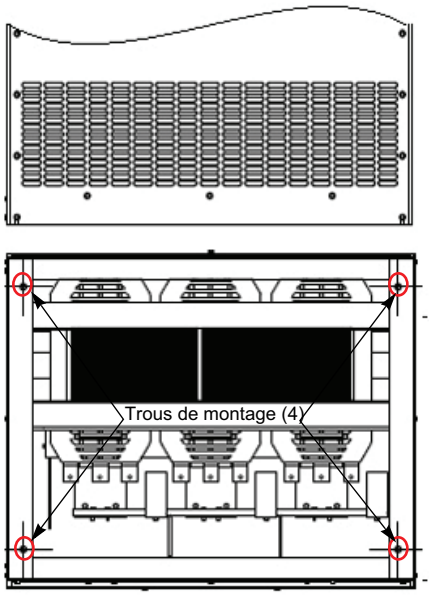

Unités à ne pas utiliser sur un sol combustible (fond ouvert)

Figure 18 : Support de montage au sol Armoire de type K

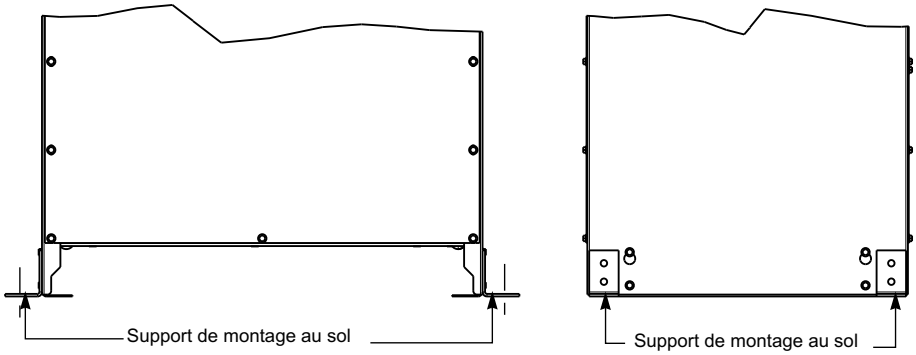

Figure 19 : Support de montage au sol Armoire de type K

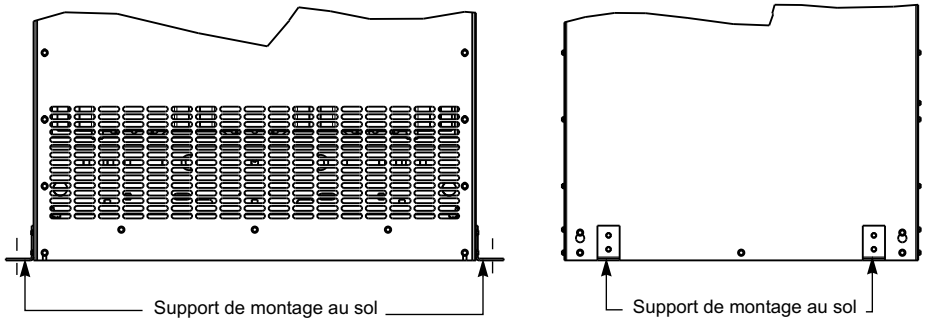

FRANÇAIS

© 1992–2018 Schneider Electric Tous droits réservés

Tous les types d'armoires (D, E, F, H, K et J)

- Transformateurs installés à l'intérieur (types D, E, F, H, K et J) :
  - — Complètement sous armoire ou complètement sous armoire avec ouvertures de ventilation; conforme à NEC 450.21 (É.-U.) (A), exception
  - — Unités de plus de 112,5 kVA
  - — Possèdent des systèmes d'isolation pour 220 °C (428 °F) ou 200 °C (392 °F); conforme à NEC 450.21 (É.-U.) (B), exception N° 2

Voir la figure 20.

Figure 20 : Transformateurs installés à l'intérieur : NEC 450.21 (É.-U.), exceptions A ou B de l'exemple de plaque signalétique

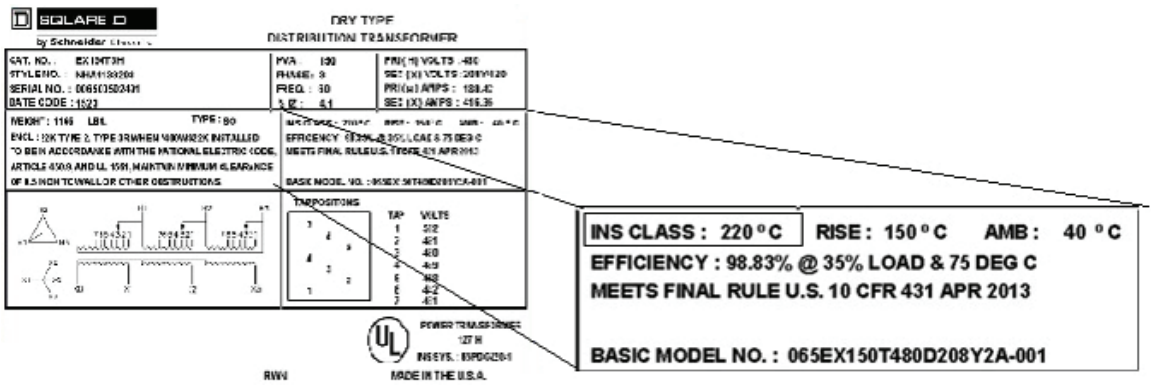

Tableau 1 : Dégagements de l'armoire

Type d'armoire	Dégagement avant	Dégagement latéral (po / mm)	Dégagement arrière (po / mm)
D	Le dégagement de travail pour tous les types varie fortement en fonction de la tension et de l'application spécifique. Consulter l'article 110.26 du NEC (É.-U.).	0,50 / 12,7	Type EE – 3 / 76,2 Tous les autres types – 6 / 152
H			3 / 76,2
E			3 / 76,2
K			0,50 / 12,7
J			0,50 / 12,7
F			12 / 305

Le montage des transformateurs peut être converti de « au sol » à « mural »(voir le tableau 2 ci-après et la figure 21 à la page 21) ou de « au sol » à « trapèze » (voir le tableau 3 et la figure 22 à la page 22) à l'aide des kits disponibles de l'usine. Les kits sont pré-poinçonnés pour assurer l'alignement avec les trous de montage de l'armoire et, après l'installation du transformateur, pour maintenir le dégagement minimum des unités. Le nouveau support de montage mural de type K permet des dégagements de 6 po (152 mm) et 3 po (76 mm), tous les autres types exigent un dégagement de 6 po (152 mm).

Les kits d'usine ne comprennent pas la quincaillerie, laquelle doit être fournie par le client. La quincaillerie comprend la tige filetée pour le montage des transformateurs avec trapèze. Le concepteur responsable doit déterminer la taille et le choix des ancres et de la quincaillerie du fait de la grande diversité des matériaux et techniques de construction. Schneider Electric ne peut pas donner de conseils sur l'ancrage, le montage mural ou la taille des tiges pour le montage avec trapèze.

© 1992–2018 Schneider Electric Tous droits réservés

Tableau 2 : Conversion de montage au sol à montage mural (à l'aide de kits d'usine)

Type d'armoire	Numéro de l'armoire	Poids maximum (lb / kg)
D	17 – 20	700 / 317
H	17 – 18	700 / 317
E	17 – 20	700 / 317
K	17 – 20	850 / 386

Figure 21 : Transformateur à montage mural

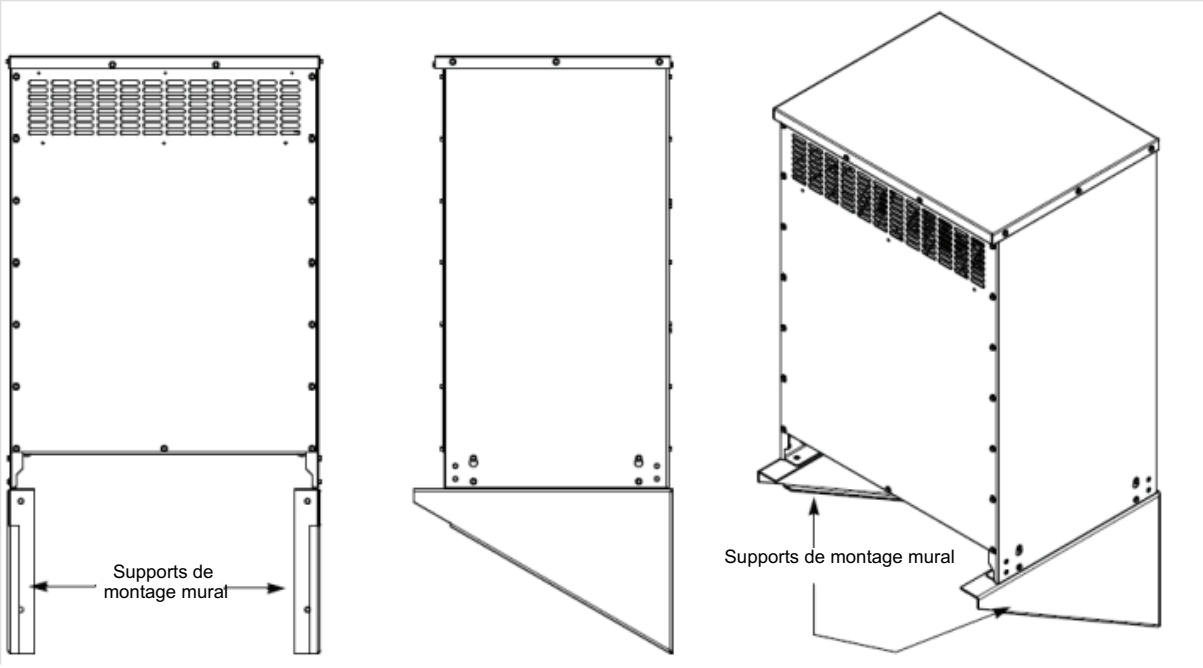

Vue avant **Vue latérale**

FRANÇAIS

© 1992–2018 Schneider Electric Tous droits réservés

Tableau 3 : Conversion de montage au sol à montage avec trapèze (au plafond) (à l'aide de kits d'usine)

Type d'armoire	Numéro de l'armoire	Poids maximum (lb / kg)
D	17 – 24	1200 / 544
H	17 – 18	1200 / 544
E	17 – 22	1200 / 544
K	17 – 22	1200 / 544

Figure 22 : Transformateur à montage avec trapèze (au plafond)

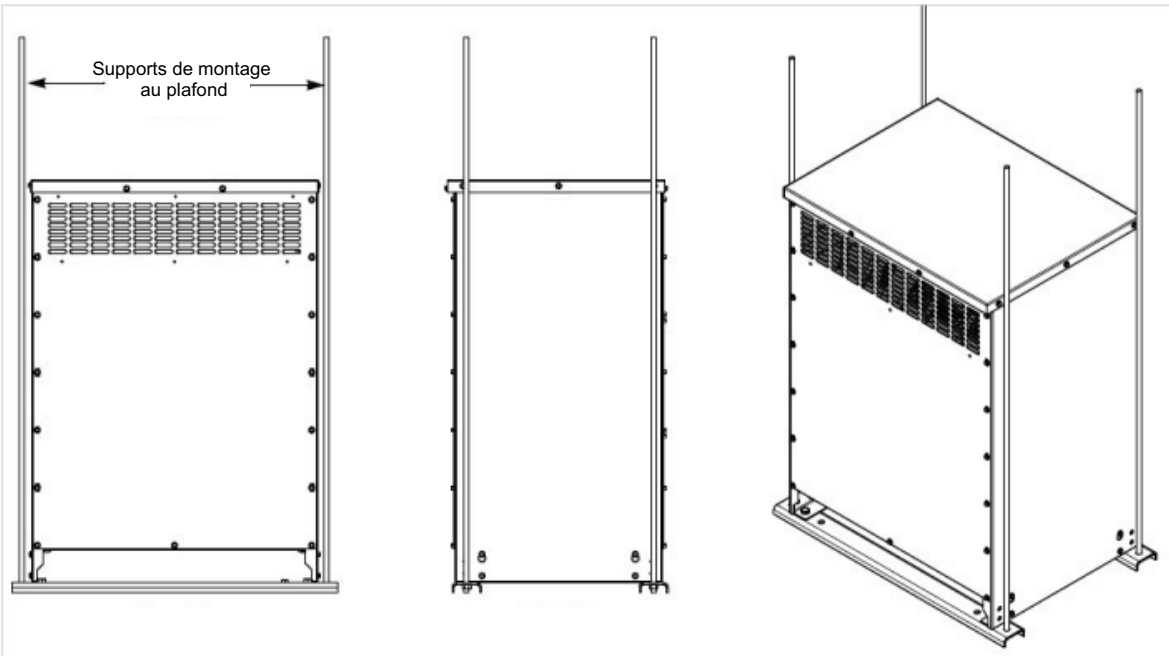

Vue avant **Vue latérale**

Les armoires D, E, H, K et J peuvent être converties en type 3R à l'aide de kits installés sur place. Voir la figure 23 à la page 25.

Armoire de type F – doit faire l'objet d'une commande à l'usine si installée à l'extérieur.

© 1992–2018 Schneider Electric Tous droits réservés

Figure 23 : Kits d'armoire de type 3R

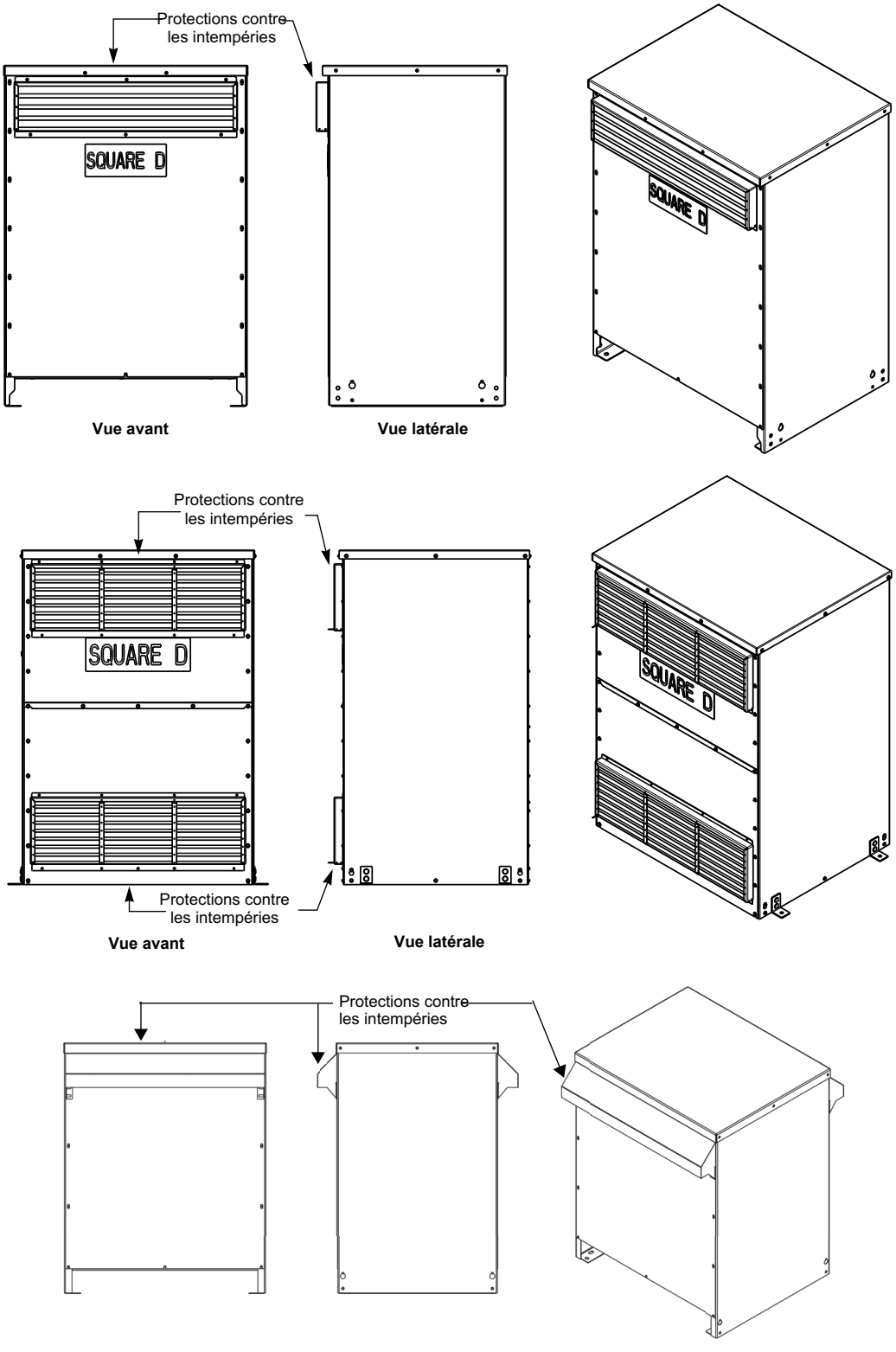

© 1992–2018 Schneider Electric Tous droits réservés

Mise à la terre

1. Mettre à la terre de façon permanente et adéquate l'armoire et l'assemblage du noyau des transformateurs de type sec conformément aux exigences du NEC (É.-U).
   - — Les enroulements peuvent être mis à la terre en tenant compte des conditions locales et conformément au NEC (É.-U).
   - — Le bornier de m.à.l.t. doit être inscrit UL pour cette fin.
   - — Conformément à NEC 450.10 (É.-U.), le bornier doit être fixé à l'armoire conformément à NEC 250.12 (É.-U.) et ne doit pas être installé sur ni par-dessus des ouvertures de ventilation.
2. Raccorder le transformateur, les accessoires et composants connexes à la terre conformément à NFPA 70 (NEC – É.-U.).
3. Terminer tous les conducteurs de m.à.l.t. et de mise à la masse au point commun de m.à.l.t. de l'appareil sur l'armoire.
4. Enlever la peinture de la zone sur laquelle le bornier de m.à.l.t. doit être monté afin d'augmenter le contact avec les pièces de l'armoire.
   - — Armoires de types D, E et H : Un endroit est disponible à la base du transformateur pour percer et monter le bornier de m.à.l.t.
   - — Armoire de type K : Trois trous pré-percés sont poinçonnés avec le symbole de terre pour le montage du bornier de m.à.l.t.
   - — Armoire de type J : Deux trous pré-percés sont poinçonnés avec le symbole de terre pour le montage du bornier de m.à.l.t.

Les kits de cosses secondaires de la marque Square D comprennent un bornier de m.à.l.t. à quatre conducteurs. Le bornier peut être également obtenu de Schneider Electric comme dispositif séparé. Se reporter au tableau 6 à la page 46 et voir la figure 24.

Figure 24 : Bornier de m.à.l.t. à quatre conducteurs

FRANÇAIS

© 1992–2018 Schneider Electric Tous droits réservés

Qualifications sismiques

Les limites sismiques pour les transformateurs de type sec basse tension sont obtenues à la suite des résultats d'essais sur table de secousses à trois axes, menés conformément au protocole d'essai AC156. Les certifications sont basées sur l'emplacement d'installation des unités et les codes du bâtiment régissant l'installation.

Les résultats des codes du bâtiment sont disponibles pour CBC 2001, CBC 2007, CBC 2010, IBC 2000, IBS 2003, IBC 2006, IBC 2009, NBC 2005, NBCC 2005, NBCC 2010, NFPA 5000, UBC 94, CBC 95, UBC97 et UFC 3-310-04.

Contacter le distributeur local de Schneider Electric ou appeler le 1-888-778-2733 (É.-U.) pour obtenir le niveau spécifique de Sds, z/h et Ip pour chaque type d'armoire.

Les niveaux fournis sont basés sur les unités que seront montées et les notes sur les plans d'approbation de chaque numéro de pièce. Des plans sont disponibles qui comprennent les dimensions de montage, les dimensions des trous de montage, les dimensions hors-tout, le poids des unités et l'emplacement approximatif du centre de gravité pour aider à la qualification sismique. Contacter le distributeur local de Schneider Electric ou appeler le 1-888-778-2733 pour obtenir ces plans.

D'autres personnes sont responsables de fournir les détails des exigences de raccordement et d'ancrage des appareils (y compris le système d'entrave latérale, le cas échéant) pour l'installation du transformateur. L'installateur et les fabricants des systèmes d'ancrage et d'entraves latérales ont la responsabilité d'assurer que les exigences de montage soient respectées.

Contrôle des bruits/vibrations

Le transformateur a été conçu de façon à minimiser le niveau du bruit audible produit. Des coussinets isolants sont fixés entre le support de montage du transformateur et l'armoire à l'aide de boulons et d'écrous. La quincaillerie de montage est serrée avant l'expédition pour éviter tout endommagement.

Desserrer l'écrou d'un tour complet pour faire flotter le transformateur sur les coussinets isolants, isolant ainsi le transformateur de l'armoire. Cela réduira les niveaux de bruits audibles encore davantage. Voir les figures 25 et 26.

Figure 25 : Étiquette de desserrage des écrous d'un tour complet (quatre endroits)

Figure 26 : Flottaison du transformateur sur les coussinets isolants/amortisseurs de sons

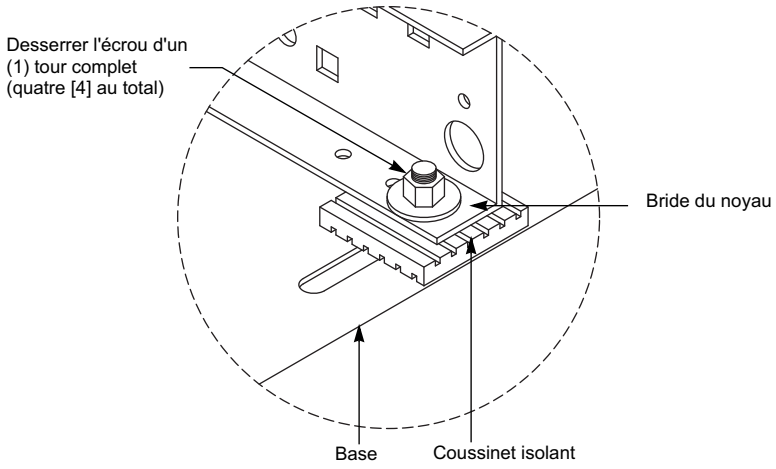

FRANÇAIS

De plus, l'endroit où se trouve le transformateur peut affecter le niveau sonore :

- ❑ Essayer d'éviter d'installer le transformateur dans un coin, dans un couloir étroit ou dans un endroit muni de surfaces lisses. Procéder ainsi peut causer la réflexion et l'amplification du bruit.
- ❑ Attacher fermement les panneaux de l'armoire. Des panneaux lâches peuvent s'entrechoquer, augmentant encore le bruit produit.
- ❑ Utiliser des conduits flexibles, si possible.
- ❑ S'assurer que le type de la structure sur laquelle le transformateur est monté est suffisamment solide pour supporter le poids du transformateur.

Armoire de type K

Les boulons de l'armoire de type K sont accessibles par l'avant avec un prolongateur. Voir la figure 27.

Figure 27 : Armoire de type K : Boulons accessibles par l'avant du transformateur

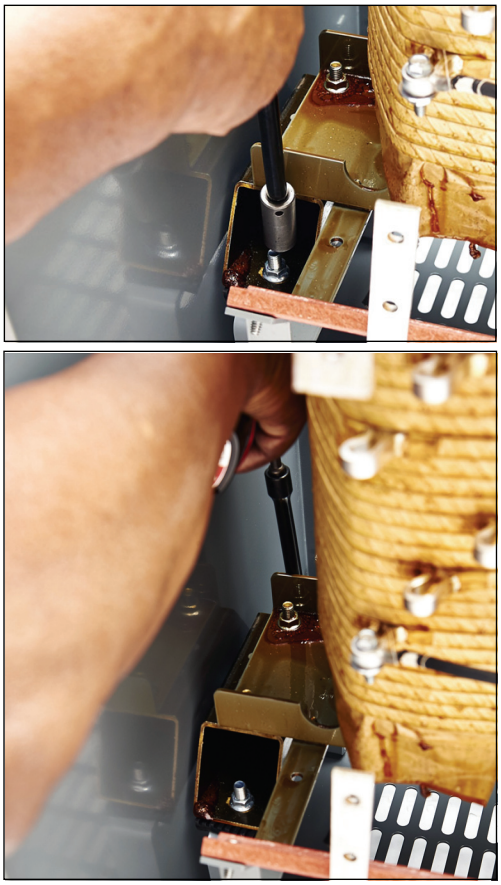

Armoires de types D, E, H et J

Les boulons des armoires de types D, E, H et J sont accessibles par l'avant.

Voir la figure 26 à la page 27 pour l'accès de ces armoires.

© 1992–2018 Schneider Electric Tous droits réservés

Raccordements électriques

- ❏ Utiliser des canalisations, conduits et connecteurs flexibles, autant que possible, comme accessoires pour les armoires de transformateurs. Cela contribuera à réduire la génération de bruits audibles.
- ❏ Respecter NFPA 70 (NEC - É.-U.) et les exigences d'espace de courbure des fils pour l'armoire du transformateur. Comme norme de l'industrie, grouper ensemble les conducteurs de phase, de neutre et de m.à.l.t. de l'appareil associés dans l'armoire du transformateur.
- ❏ Toujours utiliser une clé dynamométrique étalonnée pour serrer les connecteurs et bornes électriques. Pour toute directive supplémentaire, consulter la norme UL468A.
- ❏ S'assurer que les canalisations, conduits et connecteurs entrent dans l'armoire uniquement dans la zone indiquée sur les plans. Les points d'accès pour chaque type d'armoire sont indiqués ci-dessous :

- Armoire de type D : (Voir la figure 28)
  - — Section avant du transformateur
  - — Accès latéral et par le bas
- Armoire de type E : (Voir la figure 28)
  - — Section avant du transformateur
  - — Accès latéral et par le bas
- Armoire de type H : (Voir la figure 28)
  - — Section avant du transformateur
  - — Accès latéral et par le bas
- Armoire de type K : (Voir la figure 28)
  - — Section avant du transformateur
  - — Accès latéral et par le bas

Figure 28 : Point d'accès : Armoires de types D, E, H et K

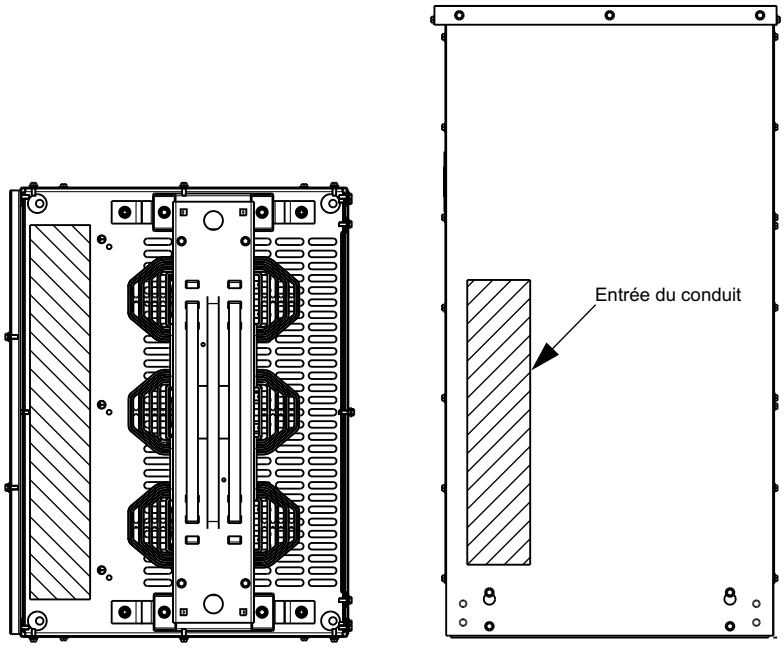

Vue vers le bas (l'avant est à gauche)

Vue latérale (la zone marquée est la section avant)

FRANÇAIS

© 1992–2018 Schneider Electric Tous droits réservés

- Armoire de type F :
  - — Section inférieure du transformateur
  - — Des chambres d'appel d'air sont offertes si un accès latéral est nécessaire
- Armoire de type J : (Voir la figure 29)
  - — Section avant du transformateur
  - — Accès latéral
  - — Accès ouvert par le bas, à l'avant, vers les brides du noyau

Figure 29 : Point d'accès : Armoire de type J :

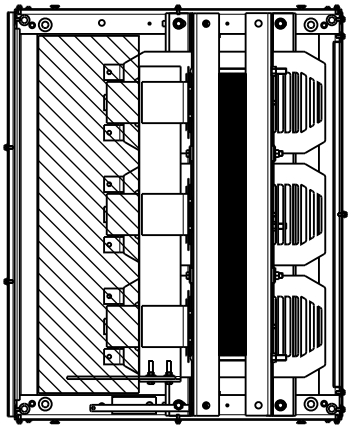

Vue vers le bas (l'avant est à gauche)

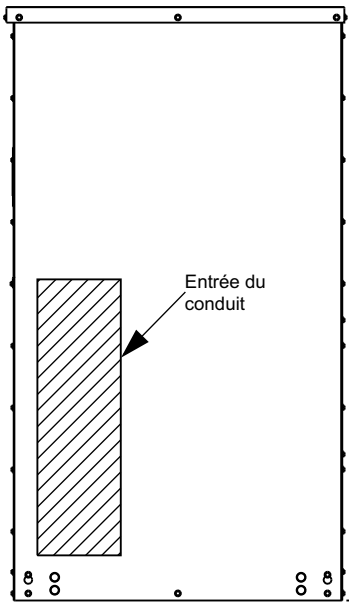

Vue latérale
(la zone marquée est la section avant)

❑ Garder les points d'accès sous la carte des bornes supérieure afin d'empêcher la chaleur de sortir par les canalisations, les conduits et les connecteurs. L'auto-collant indiquera cet emplacement supérieur sur tous les types d'armoires (indiqué également sur les plans). Voir la figure 30.

Figure 30 : Étiquette pour montrer l'emplacement supérieur sur les armoires (points d'accès sous la carte de bornes supérieure)

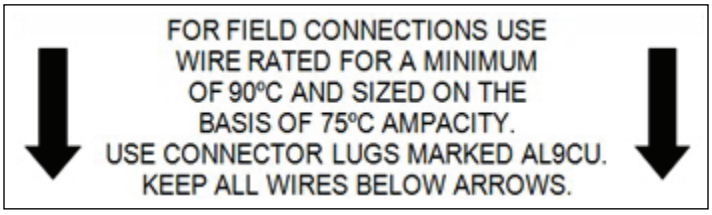

FRANÇAIS

© 1992–2018 Schneider Electric Tous droits réservés

- ❏ S'assurer que l'accès latéral soit conforme à NEC 312.6 (A) (É.-U.) : Courbure minimale des fils aux bornes . L'accès par le bas doit être conforme à NEC 312.6 (B) (É.-U.) : Espace minimum de courbure des fils aux bornes.
- ❏ Observer UL 1561 qui exige que toutes les cosses conviennent à 90 °C (194 °F). De plus, le tableau nominal des températures des conducteurs doit être de 75 °C (167 °F) pour que le calibre satisfasse aux exigences de courant du dispositif de protection contre les surintensités et aux courants de la plaque signalétique. Se reporter au tableau 5 à la page 45, au tableau 6 à la page 46 et au tableau 7 à la page 47 pour une liste des kits de cosses de Square D, calibres de fils par kVA et systèmes de tension américains.
- ❏ S'assurer que la surface de contact soit propre. Cela réduira au minimum la possibilité d'un contact haute résistance qui pourrait entraîner une chaleur localisée et une possibilité de panne prématurée. Se reporter à Raccordements et surfaces de contact à la page 40 pour les directives d'application d'un composé électrique approuvé.
- ❏ Raccorder les phases aux bornes appropriées pour obtenir une rotation correcte du moteur. Le schéma des phases est indiqué sur la plaque signalétique. La plaque signalétique indique également les emplacements des prises et la tension nominale de chacune d'elles. Voir la figure 31.

Figure 31 : Schéma des phases, emplacements des prises et tension nominale marqués sur la plaque signalétique

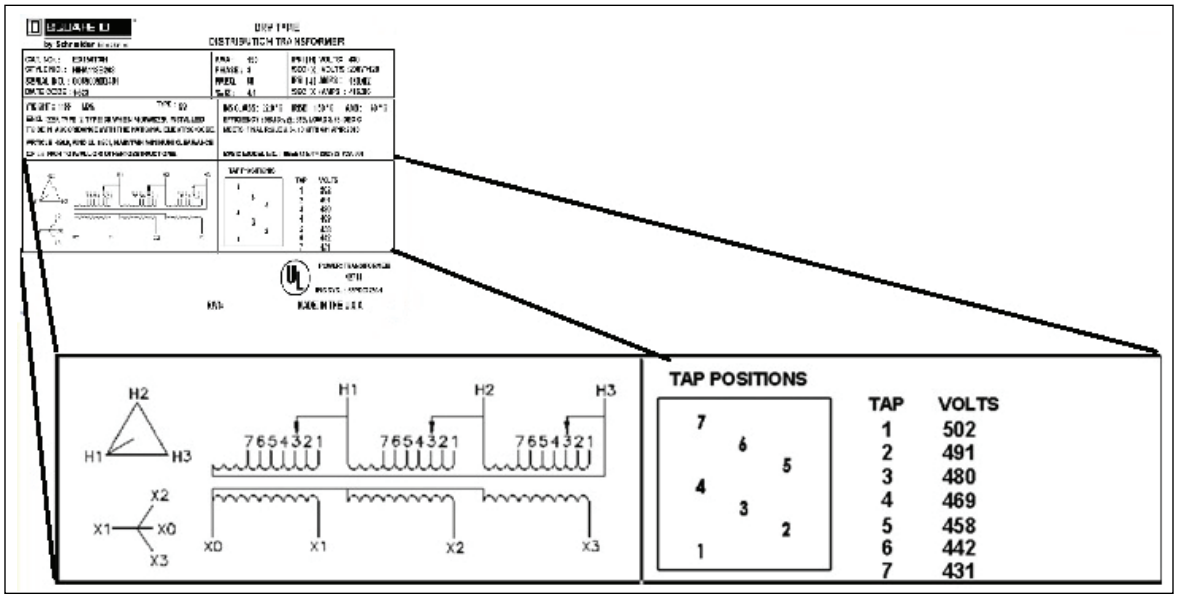

FRANÇAIS

❑ Le raccordement de la source d'alimentation au secondaire du transformateur est autorisé par NEC 450.11 (É.-U.) là où l'installation est conforme aux directives du fabricant.

Lorsque la source d'alimentation est raccordée au secondaire du transformateur, le courant d'appel augmente. Le dispositif de protection contre les surintensités doit être choisi selon NEC 450.3(B) (É.-U.) en utilisant la marge de tolérance de 250 % de façon à réduire la possibilité de déclenchement intempestif pendant la mise sous tension. Une protection du secondaire contre les surintensités sera requise.

Ne faire aucun raccordement aux bornes HO ou XO du côté alimentation d'un enroulement de transformateur configuré en étoile. Voir la figure 32.

Figure 32 : Étiquette d'attention pour les transformateurs raccordés triangle-étoile ou étoile-triangle

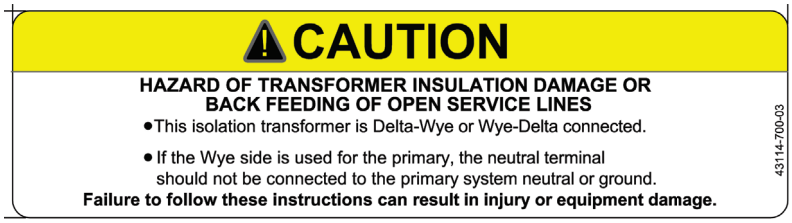

FRANÇAIS

© 1992–2018 Schneider Electric Tous droits réservés

Vérifications et essais avant la mise en service/mise sous tension

Nettoyage

1. S'assurer que tout le matériau d'emballage a été retiré, y compris tout matériau d'emballage utilisé à l'intérieur de l'armoire du transformateur employé pour supporter et protéger l'unité au cours de l'expédition.
2. Passer l'aspirateur pour supprimer autant de poussière que possible. La poussière agit comme un matériau isolant thermique qui augmentera la température de l'unité et pourrait peut-être réduire sa durée de vie utile. Se reporter à la section Nettoyage à la page 40.

Vérifications visuelles et mécaniques

Effectuer les vérifications visuelles et mécaniques suivantes indiquées ci-dessous. De plus, se reporter à Exécution de vérifications visuelles et mécaniques à la page 39 pour une liste détaillée de directives.

- ❏ Inspecter visuellement le transformateur pour détecter tout endommagement physique éventuel. Réparer tout endommagement physique, si possible et fournir des plaques de protection adéquates pour éviter tout endommagement futur.
- ❏ Comparer les renseignements de la plaque signalétique du transformateur avec les plans ou spécifications pour l'installation.
- ❏ Vérifier si le raccordement des prises est correct et conforme aux renseignements de la plaque signalétique.
- ❏ Vérifier la distance d'isolement de tous les raccordements électriques. Vérifier le serrage de tous les raccordements avec une clé dynamométrique étalonnée.
- ❏ S'assurer visuellement de la mise à la terre correcte du noyau, du châssis, de l'armoire, des conduits, canalisations et conducteurs. Se reporter à la section Mise à la terre et à la masse à la page 42.

© 1992–2018 Schneider Electric Tous droits réservés

Essais électriques

⚠ DANGER

RISQUE D'ÉLECTROCUTION, D'EXPLOSION OU ÉCLAIR D'ARC ÉLECTRIQUE

- Portez un équipement de protection personnelle (ÉPP) approprié et observez les méthodes de travail électrique sécuritaire. Voir NFPA 70E, NOM-029-STPS-2011 ou CSA Z462.
- Seul un personnel qualifié doit effectuer l'installation et l'entretien de cet appareil.
- N'entreprenez ce travail qu'après avoir lu et compris toutes les explications contenues dans ces directives.
- Coupez toutes les alimentations à cet appareil avant d'y travailler.
- Utilisez toujours un dispositif de détection de tension à valeur nominale appropriée pour vous assurer que l'alimentation est coupée.
- Observez toujours toutes les procédures d'interverrouillage et d'étiquetage selon la réglementation OSHA.
- Inspectez soigneusement la zone de travail et enlevez tous les outils et objets laissés à l'intérieur de l'appareil.
- Replacez tous les dispositifs, les portes et les couvercles avant de mettre l'appareil sous tension.
- Les explications données dans ces directives présument que le client a pris ces mesures avant d'effectuer un entretien ou des essais.

Si ces directives ne sont pas respectées, cela entraînera la mort ou des blessures graves.

Se reporter à Entretien à la page 39 pour effectuer les essais électriques suivants avant la mise en service :

- ❑ Mesurer la résistance des contacts à l'aide d'un ohmmètre à faible résistance. Se reporter à la section Résistance des contacts à la page 41.
- ❑ Effectuer des essais de résistance de l'isolation avec un dispositif approprié. Se reporter à la section Résistance de l'isolation à la page 41.
- ❑ Effectuer un essai du rapport de transformation sur toutes les prises et sur les pleines tensions des enroulements pour chaque phase. Se reporter à la section Rapport des spires à la page 42.
- ❑ Mesurer et prendre note des résistances des enroulements sur les transformateurs plus grands (>500 kVA). Se reporter à la section Résistance des enroulements à la page 42.

© 1992–2018 Schneider Electric Tous droits réservés

Section 5—Fonctionnement

⚠ DANGER

RISQUE D'ÉLECTROCUTION, D'EXPLOSION OU ÉCLAIR D'ARC ÉLECTRIQUE

- Portez un équipement de protection personnelle (ÉPP) approprié et observez les méthodes de travail électrique sécuritaire. Voir NFPA 70E, NOM-029-STPS-2011 et CSA Z462.
- Seul un personnel qualifié doit effectuer l'installation et l'entretien de cet appareil.
- N'entreprenez ce travail qu'après avoir lu et compris toutes les explications contenues dans ces directives.
- Coupez toutes les alimentations à cet appareil avant d'y travailler.
- Utilisez toujours un dispositif de détection de tension à valeur nominale appropriée pour vous assurer que l'alimentation est coupée.
- Avant d'effectuer des inspections visuelles, des essais ou des procédures d'entretien sur cet appareil, déconnectez toutes les sources d'alimentation. Présumez que tous les circuits sont sous tension tant qu'ils n'ont pas été complètement mis hors tension, vérifiés et étiquetés. Faites particulièrement attention à l'agencement du système d'alimentation. Considérez toutes les sources d'alimentation, y compris la possibilité de rétro-alimentation.
- Observez toujours toutes les procédures d'interverrouillage et d'étiquetage selon la réglementation OSHA.
- Inspectez soigneusement la zone de travail et enlevez tous les outils et objets laissés à l'intérieur de l'appareil.
- Replacez tous les dispositifs, les portes et les couvercles avant de mettre l'appareil sous tension.
- Les explications données dans ces directives présument que le client a pris ces mesures avant d'effectuer un entretien ou des essais.

Si ces directives ne sont pas respectées, cela entraînera la mort ou des blessures graves.

FRANÇAIS

Effets de l'humidité

Le procédé de vernissage par plongée ou bain ne supporte pas la croissance de moisissures. Le seul souci lorsque les unités sont entreposées dans des endroits à forte humidité est de préserver l'intégrité du matériau isolant. Si les unités sont correctement entretenues et nettoyées à leur arrêt avant de longues périodes hors tension, il ne devrait se présenter aucun problème de moisissure.

Lorsque le transformateur est sous tension, l'humidité a peu d'importance. Toutefois, observer les précautions énumérées ci-après si le transformateur est mis hors tension, est laissé se refroidir à la température ambiante et est maintenu à l'arrêt pendant plus de 12 heures (en particulier dans des conditions de forte humidité).

1. Placer des petits éléments de chauffage internes au bas de l'unité peu après sa mise à l'arrêt afin de maintenir sa température à quelques degrés au-dessus de celle de l'air environnant.
2. Inspecter l'unité pour s'assurer qu'il n'existe pas de trace d'humidité avant de la remettre en service.

© 1992–2018 Schneider Electric Tous droits réservés

3. Vérifier la résistance de l’isolation. Si une présence évidente d'humidité existe ou si la résistance de l'isolation est inférieure à 1 mégohm, faire sécher le transformateur en le plaçant dans un four ou en soufflant de l'air chaud dessus.

Température de l'armoire

L'échauffement sur l'extérieur de l'armoire pour des transformateurs ventilés ne doit pas dépasser 50°C (122°F), sauf dans les cas indiqués dans la norme UL 1561.

Avant de mettre les transformateurs sous tension

1. Enlever toutes les attaches temporaires. Voir la figure 33.
2. Vérifier les raccordements électriques boulonnés. Se reporter à Raccordements électriques à la page 29 pour une liste de vérifications détaillée.
3. Retirer les accumulations excessives d'encrassement des enroulements du transformateur et des isolateurs afin de permettre la libre circulation de l'air et d'assurer une protection contre des possibilités de rupture de l'isolation. Se reporter à Nettoyage à la page 40 pour une liste de vérifications détaillée.
4. Effectuer des essais de résistance de l'isolation avec un dispositif approprié. Pour les directives détaillées, se reporter à la section Résistance de l’isolation à la page 41.
5. Effectuer une vérification visuelle et mécanique du transformateur et de son environnement immédiat. Se reporter à Exécution de vérifications visuelles et mécaniques à la page 39 pour une liste de vérifications détaillée.

Figure 33 : Retrait des attaches temporaires

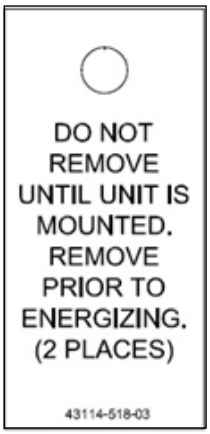

Mise sous tension du transformateur

1. Observer toutes les mesures et exigences de sécurité pour l'ÉPP comme précisé dans NFPA 70E et tous autres codes ou normes en vigueur.
   a. Mettre immédiatement le transformateur hors tension s'il y a une indication de formation d'arc (visuelle ou audible) à tout moment durant la mise en service initiale.
   b. Rechercher et corriger la cause de la formation d'arc avant de remettre l'unité sous tension.
2. Rechercher et corriger les sources de bruit excessif. Lorsqu'il est sous tension, le transformateur fait un peu de bruit audible. Un bruit mécanique excessif, des hésitations ou cliquetis peuvent être une indication de quincaillerie ou de pièces de l'armoire mal installées ou insuffisamment serrées.
3. Mesurer et vérifier les tensions primaires et secondaires phase-phase et phase-terre pour tous les enroulements.
   a. Là où cela s'applique, mesurer et vérifier les tensions phase-neutre également.
   b. Prendre note et conserver les valeurs pour toute référence ultérieure.

   REMARQUE : Les mesures phase-phase, phase-terre et phase-neutre vérifieront que le transformateur fonctionne selon les tensions de la plaque signalétique.

© 1992–2018 Schneider Electric Tous droits réservés

c. Mesurer les tensions phase-terre.

d. Prendre note et conserver les valeurs pour toute référence ultérieure.

REMARQUE : Les tensions phase-terre vérifieront que l'unité a été installée correctement.

4. Déplacer une prise à la fois, ou s'assurer que le cavalier est en place conformément au schéma de câblage comme indiqué sur la plaque signalétique. Voir la figure 31 à la page 31.

   REMARQUE : Ne pas modifier les prises lorsque le transformateur est sous tension.

   a. Ajuster au besoin les prises du transformateur pour satisfaire aux exigences de la tension réelle.

   b. S'assurer que les prises sont nettes de tout vernis ou autre matériau isolant.

5. Effectuer une vérification de rotation des phases avec un dispositif approprié pour les charges qui sont sensibles aux phases (par ex., certaines applications de moteurs ou variateurs).

   a. Suivre les directives du fabricant pour le dispositif.

   b. Corriger les erreurs de rotation des phases avant de mettre le transformateur sous tension.

© 1992–2018 Schneider Electric Tous droits réservés

© 1992–2018 Schneider Electric Tous droits réservés

Section 6—Entretien

Exécution de vérifications visuelles et mécaniques

⚠ DANGER

RISQUE D'ÉLECTROCUTION, D'EXPLOSION OU ÉCLAIR D'ARC ÉLECTRIQUE

- Seul un personnel qualifié doit nettoyer, inspecter, entretenir et essayer les transformateurs.
- Coupez toutes les alimentations à cet appareil avant d'y travailler.
- Déconnectez et isolez électriquement toute alimentation vers le transformateur afin qu'aucun contact accidentel ne se produise avec des pièces sous tension.
- Déchargez toutes les charges statiques des enroulements.

Si ces directives ne sont pas respectées, cela entraînera la mort ou des blessures graves.

1. Effectuer une inspection visuelle du transformateur et de son environnement immédiat.
   a. Inspecter l'armoire pour détecter tout endommagement éventuel.
   b. Réparer tout endommagement, si possible.
   c. Prévoir des protections afin d'empêcher tout endommagement futur.
2. Noter les données de fonctionnement alors que le transformateur est encore sous tension et en service.
3. Mettre le transformateur hors tension avant d'entreprendre un travail sur l'unité.
   a. Observer toutes les mesures de sécurité pour placer l'unité en condition électriquement sans danger.
   b. Retirer les couvercles d'accès. L'inspecter pour :
   — l'encrassement des surfaces isolantes et des endroits tendant à réduire le débit d'air.
   — des raccordements desserrés.
   — la condition des changeurs de prises ou des borniers.
   — la condition générale du transformateur.
4. Inspecter l'armoire, le transformateur, les bornes, les borniers et les isolateurs pour détecter des signes éventuels de surchauffe à partir de sources internes ou externes. Observer s'il existe des lignes de fuite de tension sur les surfaces isolantes, mises en évidence par des traces de cheminement ou de carbonisation.
5. Vérifier s'il y a présence de rouille, de corrosion et de détérioration de la peinture. Réparer la rouille et la corrosion lorsque nécessaire.

Fréquence

La fréquence des inspections des transformateurs dépend des conditions de fonctionnement.

Dans des endroits propres et secs, des inspections annuelles peuvent suffire. Toutefois, dans d'autres endroits, tels que ceux où l'air est contaminé par des poussières ou des fumées chimiques, une inspection à intervalles de trois ou six mois peut être requise. Habituellement, après les quelques premières périodes d'inspection, un programme défini peut être établi en fonction des conditions existantes pour le transformateur.

© 1992–2018 Schneider Electric Tous droits réservés

Évènements graves, environnementaux ou spéciaux

- ❑ Effectuer des inspections, de l'entretien et des essais de routine après un évènement grave de court-circuit électrique, de défaut à la terre ou un évènement d'environnement (par ex., inondation) pour déterminer l'état opérationnel du transformateur.
- ❑ Effectuer les inspections, l'entretien et les essais si le transformateur est resté longtemps hors service. Placer des éléments de chauffage pour maintenir la température du transformateur au-dessus de la température ambiante afin d'éviter la formation de condensation dans le transformateur pendant un arrêt prolongé.

Nettoyage

Raccordements et surfaces de contact

Une surface de contact propre est nécessaire et les bornes doivent être propres. Lorsque les transformateurs sont installés à l'intérieur ou à l'extérieur, ou encore dans un environnement contraignant, les raccordements doivent être scellés à l'aide d'une pâte à joint électrique approuvée.

Appliquer la pâte sur les raccordements et surfaces exposés avant de faire un raccordement boulonné.

Armoires, enroulements et isolateurs

1. Mettre le transformateur hors tension.
2. Suivre la liste des vérifications ci-après pour permettre une libre circulation d'air et pour se garder de ruptures d'isolation et de problèmes de rendement thermiques :

- ❑ Nettoyer l'armoire, les enroulements et les isolateurs du transformateur en passant l'aspirateur ou en soufflant de l'air comprimé propre et sec ou de l'azote. S'assurer de porter un équipement de protection personnelle (ÉPP) pendant le nettoyage.

  REMARQUE : Passer l'aspirateur est la première étape préférable pour le nettoyage. L'air comprimé doit avoir un point de rosée de -45,5 °C (-50 °F) ou moins et une pression inférieure ou égale à 25 lb/po².
- ❑ Nettoyer les supports de conducteurs, changeurs de prises, borniers, manchons et autres surfaces isolantes importantes avec des chiffons non pelucheux ou des brosses de soie souples.

  REMARQUE : Ne pas utiliser de liquides, dissolvants ni détergents, car ils pourraient détériorer les matériaux isolants.
- ❑ Inspecter soigneusement et nettoyer à fond les ouvertures de ventilation (gaines) et les assemblages d'enroulements. Retirer toutes obstructions.
- ❑ Retirer toutes les ordures ou tous les matériaux combustibles de la zone entourant l'unité.

© 1992–2018 Schneider Electric Tous droits réservés

Exécution d'essais électriques

⚠ DANGER

RISQUE D'ÉLECTROCUTION, D'EXPLOSION OU ÉCLAIR D'ARC ÉLECTRIQUE

- Seul un personnel qualifié doit nettoyer, inspecter, entretenir et essayer les transformateurs.
- Coupez toutes les alimentations à cet appareil avant d'y travailler.
- Déconnectez et isolez électriquement toute alimentation vers le transformateur afin qu'aucun contact accidentel ne se produise avec des pièces sous tension.
- Déchargez toutes les charges statiques des enroulements.

Si ces directives ne sont pas respectées, cela entraînera la mort ou des blessures graves.

Effectuer les essais électriques suivants durant un entretien :

- ❑ Vérifier tous les contacts électriques avec une clé dynamométrique étalonnée.
- ❑ Vérifier si les écartements sont corrects.
- ❑ Consulter les spécifications du fabricant pour les valeurs de couple de serrage.
- ❑ Vérifier le serrage de toute la quincaillerie externe.

Résistance des contacts

- ❑ Utiliser un ohmmètre à basse résistance pour mesurer la résistance des contacts.
  a. Comparer les valeurs avec des raccordements similaires en recherchant les points de résistance des contacts extraordinairement élevés.
  b. Faire une recherche sur les raccordements qui peuvent s'écarter des valeurs communes de plus de 50 % des valeurs les plus basses.
- ❑ Un dispositif de balayage infrarouge peut être employé pour détecter des températures anormales aux contacts du transformateur pour les unités sous tension.

  REMARQUE : Prendre soin de suivre les procédures du fabricant, car des petites erreurs de fonctionnement du dispositif de balayage peuvent entraîner des erreurs notables de températures détectées.

Résistance de l'isolation

Les vérifications de résistance de l'isolation peuvent créer une charge capacitive sur un enroulement.

1. Mettre chaque enroulement à la terre pendant au moins une minute entre les essais pour écouler toute charge statique créée pendant l'essai.
2. Effectuer des essais de résistance de l'isolation avec un dispositif approprié.
3. Faire des essais d'enroulement à enroulement et d'enroulement à la terre.
4. Noter tous les résultats d'essais à titre de comparaison avec des relevés futurs.
   — Les valeurs dépendent du site d'installation et ne sont pas pré-établies à l'usine. Tous les essais sont conformes à NEMA ST-20.
   — Les relevés de résistance de l'isolation doivent être d'au moins 1 mégohm.

FRANÇAIS

© 1992–2018 Schneider Electric Tous droits réservés

— Des relevés inférieurs peuvent indiquer la présence d'humidité et nécessitent une correction au moyen d'une procédure de séchage.

Résistance des enroulements

Sur des transformateurs plus grands (>500 kVA) :

1. Mesurer les résistances des enroulements et les noter pour référence future.
2. Comparer les résultats avec les valeurs obtenues au cours de vérifications avant la mise en service. Les relevés ne devraient pas varier de plus de 5 % par rapport aux bobines adjacentes et aux vérifications avant la mise en service.
3. Noter la température à laquelle ces premiers relevés ont été pris.
   — Les valeurs dépendent du site d'installation et ne sont pas pré-établies à l'usine. Tous les essais sont conformes à NEMA ST-20.
4. Ajuster les valeurs de résistance en fonction des différences de température entre les relevés actuels et les valeurs avant la mise en service.

Mise à la terre et à la masse

1. S'assurer que les valeurs de résistance entre la cosse (ou le point) de m.à.l.t. du système et l'armoire, le noyau, le châssis et les brides du transformateur sont correctes.
2. Comparer avec les valeurs avant la mise en service, en recherchant les tendances qui peuvent indiquer une détérioration de la qualité de la mise à la masse.

Rapport des spires

1. Effectuer un essai du rapport de transformation sur toutes les prises et sur les pleines tensions des enroulements pour chaque phase. Des changements notables peuvent indiquer une perte de continuité des enroulements.
   a. Comparer ces valeurs avec celles obtenues durant des vérifications avant la mise en service. Les tensions entre les phases ne doivent pas s'écarter de plus de 0,5 % de celles des bobines adjacentes.
   b. Faire une recherche sur les relevés anormaux trouvés hors de cette limite.
2. S'assurer que les tensions des entrées et sorties sont correctes pour les tensions des prises et sorties attendues. Faire une recherche sur les relevés anormaux.

Coussinets isolants antibruit

Voir si les coussinets isolants antibruit montrent des signes de détérioration physique.

Conduits de refroidissement des bobines

1. Inspecter tous les conduits de refroidissement des bobines afin de détecter toute accumulation éventuelle de poussière, crasse ou autres obstructions.
2. Suivre les procédures de nettoyage standard pour assurer une circulation d'air appropriée.

Bornes

S'assurer que les bornes sont en bon état afin de garantir le bon fonctionnement des transformateurs.

- ❑ Inspecter l'alignement, le serrage (voir les exigences de couple de serrage), la pression, les brûlures ou la corrosion des bornes. Rechercher et corriger tous signes d'endommagement.
- ❑ Réparer les petites égratignures, dans la mesure où le placage des bornes n'a pas été compromis.

© 1992–2018 Schneider Electric Tous droits réservés

Section 7—Pièces de rechange et accessoires

Voir les figures 1 et 2 pour les détails des couvercles de transformateurs (supérieur, arrière et avant) et des panneaux latéraux (de gauche et de droite), et la figure 21 à la page 23 ainsi que la figure 22 à la page 24 pour les supports de montage (mural et au plafond). Consulter le tableau 1 à la page 44 pour la liste des pièces de rechange et accessoires.

Figure 1 : Assemblage éclaté pour le transformateur écoénergétique EX75T3H avec un couvercle avant d'armoire de type 20K

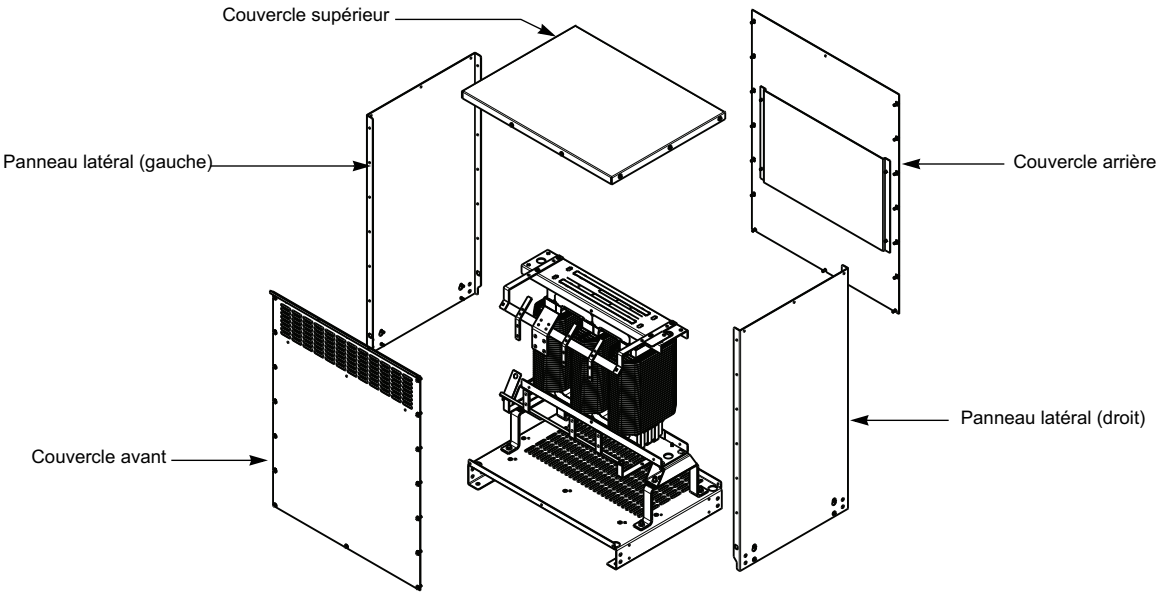

Figure 2 : Assemblage éclaté pour le transformateur écoénergétique EX300T3H avec un couvercle avant d'armoire de type 25J

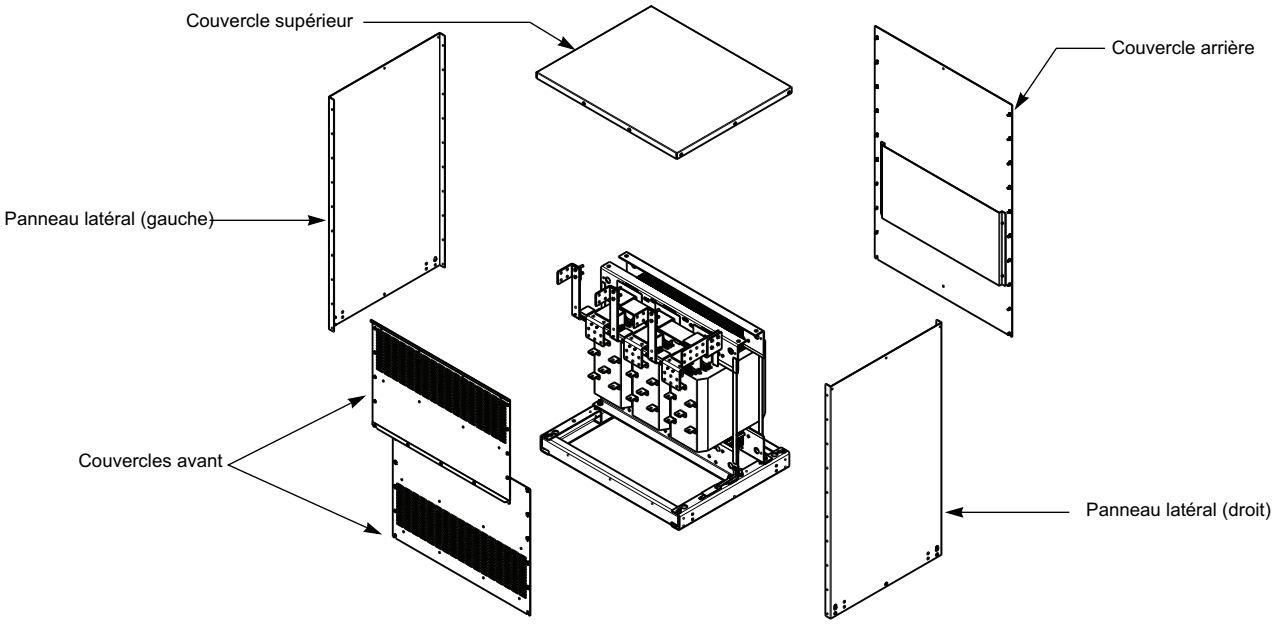

FRANÇAIS

© 1992–2018 Schneider Electric Tous droits réservés

Se reporter au Digest de Schneider Electric, *Section 14,* Transformateurs ou appeler le 1-888-778-2733 pour commander des pièces de rechange et des accessoires.

Consulter le tableau 1 pour les types d'armoires (couvercles supérieur, arrière et avant), les panneaux latéraux, protections contre les intempéries et supports de montage (mural et au plafond).

Tableau 1 : Couvercles, panneaux latéraux, protections contre les intempéries et supports de montage

Armoire	Couvercle supérieur	Couvercle arrière	Couvercle avant	Panneau latéral (gauche et droite)	Protection contre les intempéries	Support de montage mural	Support de montage au plafond
	Nº de catalogue						
17D	4310191501	4310191601	4310191601	4310191701	WS363	WMB361362	CMB363
17E	4310191501	—	—	4310191701	—	WMB361362	CMB363
17H	4310191501	4305502003	4305502003	4310191702	WS363	WMB361362	CMB363
17K	7400TC17K	7400R17K	7400FNP17K	7400LR17K	7400WS17K	7400WMB17K	7400CMB17K
18D	4305502101	4305502001	4305502001	4305501001	WS363	WMB363364	CMB363
18E	4305502101	—	—	4305501001	—	WMB363364	CMB363
18H	4305502101	4305502003	4305502003	4310179701	WS363	WMB363364	CMB363
18K	7400TC18K	7400R18K	7400FNP18K	7400LR18K	7400WS18K	7400WMB18K	7400CMB18K
19D	4305501201	4305501101	4305501101	4305501001	WS364	WMB363364	CMB364
19E	—	—	—	—	—	—	—
19K	7400TC19K	7400R19K	7400FNP19K	7400LR19K	7400WS19K	7400WMB19K	7400CMB19K
20D	4305501201	4310192201	4310192201	4310179701	WS364	WMB363364	CMB364
20E	4305501201	—	—	4310179701	—	—	—
20K	7400TC20K	7400R20K	7400FNP20K	7400LR20K	7400WS20K	7400WMB20K	7400CMB20K
21D	4305512501	4300507404	4300507404	4305512601	WS364	—	CMB364
21E	4305512501	—	—	4305512601	—	—	CMB364
21K	7400TC21K	7400R21K	7400FNP21K	7400LR21K	7400WS21K	—	7400CMB21K
22D	4310189001	4310189102	4310189102	4310189201	WS380	—	CMB380
22E	4310189001	—	—	4310189201	—	—	CMB380
22K	7400TC22K	7400R22K	7400FNP22K	7400LR22K	7400WS22K	—	7400CMB22K
23E	—	—	—	—	—	—	—
24D	4310190701	4310190802	4310190802	4310190901	WS381	—	CMB381
24E	4310190701	—	—	4310190901	—	—	CMB381
24K	7400TC24K	7400R24K	7400FNP24K	7400LR24K	7400WS24K	—	7400CMB24K
25D	4310189901	4310190001	4310190001	4310190101	WS382	—	—
25E	4310189901	—	—	4310190101	—	—	—
25J	7400TC25J	7400R25J	7400FNP25J	7400LR25J	7400WS25J	—	—
26D	—	—	—	—	—	—	—
28D	—	—	—	—	—	—	—
28E	—	—	—	—	—	—	—
29D	—	—	—	—	—	—	—
30D	4310192601	(U)4310192901 (L)4310193001	(U)4310192901 (L)4310193001	4310192801	WS383	—	—
30E	4310192601	—	—	—	—	—	—
30J	7400TC30J	7400RU30J 7400RL30J	7400FU30J 7400FLNP30J	7400LR30J	7400WS30J	—	—
31D	—	—	—	—	—	—	—
31E	—	—	—	—	—	—	—
31J	7400TC31J	7400RU31J 7400RL31J	7400FU31J 7400FLNP31J	7400LR31J	7400WS31J	—	—

Peinture pour retouche : Nº de catalogue PK49SP

© 1992–2018 Schneider Electric Tous droits réservés

Consulter le tableau 2 pour les kits de cosses de transformateur disponibles. Pour obtenir des renseignements supplémentaires concernant les bornes, se reporter à l'étiquette placée sur le dos du panneau avant du transformateur. Voir la figure 3.

Tableau 2 : Cosses à compression VERSAtile[MC] et vis de pression mécaniques—cosses inscrites UL AL9CU

Tailles de transformateurs (kVA)	Nº de catalogue du kit	Bornes		Aluminium ou Cuivre Gamme des conducteurs (AWG ou kcmil)	Quincaillerie fournie	
		Qté	Nº de catalogue		Qté	Vis d'assemblage
Bornes à compression VERSAtile pour l'appareil						
15–37 1/2 1Ø	VCELSK1	8	VCEL02114S1	Nº 8–1/0	8	1/4 po x 1 po
15–45 3Ø		5	VCEL030516H1	Nº 4–300 kcmil	1	1/4 po x 2 po
50–75 1Ø	VCELSK2	13	VCEL030516H1	Nº 4–300 kcmil	8	1/4 po x 1 po
75–112 1/2 3Ø					8	1/4 po x 2 po
100-167 1Ø 150-300 3Ø	VCELSK3	3 26	VCEL030516H1	Nº 4–300 kcmil	3	1/4 po x 3/4 po
			VCEL07512H1	Nº 500 à 750 kcmil Al Nº 500 kcmil Cu	16	3/8 po x 2 po
500 3Ø	VCELSK4	34	VCEL07512H1	Nº 500 à 750 kcmil Al Nº 500 kcmil Cu	21	3/8 po x 2 po

REMARQUE : Consulter la norme UL 486A pour les valeurs de couple à utiliser avec la quincaillerie de raccordement des bornes.

Deux plaques signalétiques sont attachées à chaque unité. Voir la figure 3. Une sur le couvercle avant, requise par les normes, la deuxième plaque signalétique est attachée au noyau et à la bobine, fournissant les renseignements d'installation à l'intérieur de l'unité. La deuxième plaque signalétique comporte en outre une liste UR pour le noyau et la bobine, permettant le retrait de l'armoire et l'installation de dispositifs dans l'appareil.

Figure 3 : Exemple de plaques signalétiques

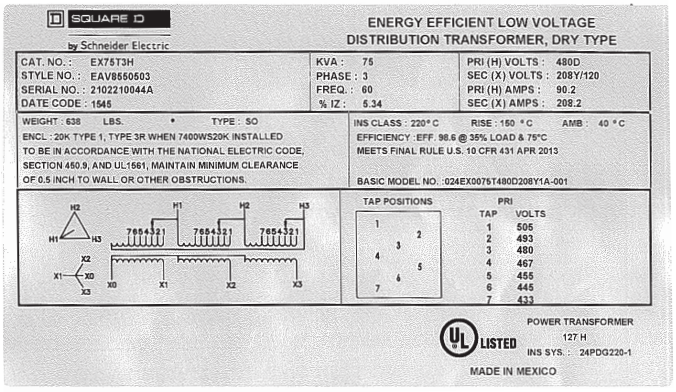

Attachée au couvercle avant

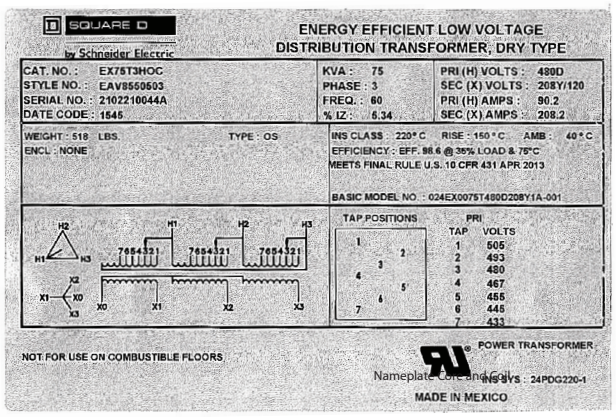

Attachée au noyau et à la bobine

FRANÇAIS

Consulter le tableau 3 pour les kits de cosses Square D pour les transformateurs de type sec suivants :

- Primaire monophasé, secondaire monophasé, primaire en triangle triphasé, secondaire triphasé
- Primaire et secondaire monophasés, secondaire en étoile triphasé, triangle triphasé avec prise centrale

Tableau 3 : Kits des cosses Square D pour transformateurs de type sec

Numéro de catalogue	Cosses par kit	Calibre de fils	Vis d'assemblage	Gamme de courant	Cosses de mise à la terre par kit	Calibre de fils	Cosses de mise à la masse par kit	Calibre de fils
Primaire monophasé, secondaire monophasé, primaire en triangle triphasé, secondaire triphasé								
DASKP100	3	1/0-14 toronné	1/4 po x 1 po	Jusqu'à 100 A	Non applicable	Non applicable	Non applicable	Non applicable
DASKP250	3	350 kcmil–6 toronné	3/8 po x 2 po	101–250 A				
DASKP400	3	600 kcmil–4 toronné (2) 250 kcmil–1/0 toronné	3/8 po x 2 po	201-400 A				
DASKP600	6	600 kcmil–4 toronné (2) 250 kcmil–1/0 toronné	3/8 po x 2 po	601-800 A.				
DASKP1000	9	600 kcmil–2 toronné	3/8 po x 2 po	601-800 A.				
DASKP1200	12	600 kcmil–2 toronné	3/8 po x 2 po	801-1200 A				
Primaire et secondaire monophasés, secondaire en étoile triphasé, triangle triphasé avec prise centrale								
DASKGS100	5	1/0-14 toronné	1/4 po x 1 po	Jusqu'à 100 A	1	(4) 2/0–14 toronné	1	2–14 toronné
DASKGS250	5	350 kcmil–6 toronné	3/8 po x 2 po	101-250 A	1	(4) 2/0–14 toronné	1	2–14 toronné
DASKGS400	5	600 kcmil–4 toronné (2) 250 kcmil–1/0 toronné	3/8 po x 2 po	201-400 A	1	(4) 2/0–14 toronné	1	1/0-14 toronné
DASKGS600	10	600 kcmil–4 toronné (2) 250 kcmil–1/0 toronné	3/8 po x 2 po	601-800 A.	1	(4) 350 kcmil–6 toronné	1	250 kcmil–6 toronné
DASKGS1000	15	600 kcmil–2 toronné	3/8 po x 2 po	601-800 A.	1	(4) 350 kcmil–6 toronné	1	250 kcmil–6 toronné
DASKGS1200	20	600 kcmil–2 toronné	3/8 po x 2 po	801-1200 A	1	(4) 350 kcmil–6 toronné	1	250 kcmil–6 toronné
DASKGS2000	25	600 kcmil–2 toronné	3/8 po x 2 po	1201-2000 A	1	(4) 350 kcmil–6 toronné	1	250 kcmil–6 toronné

REMARQUE : Les cosses ne sont pas fournies avec les unités de transformateurs. Elles doivent être achetées séparément.

Consulter la norme UL 486A pour les valeurs de couple à utiliser avec la quincaillerie de raccordement des bornes.

© 1992–2018 Schneider Electric Tous droits réservés

Consulter le tableau 4 pour les cosses mécaniques et à compression de bornes et leurs calibres de fils appropriés pour les transformateurs de type sec.

REMARQUE : Toutes les bornes permettent l'emploi de cosses à deux trous NEMA.

Tableau 4 : Taille des bornes, cosses mécaniques et à compression et calibres des fils

kVA	300 Volts et au-dessus		Moins de 300 Volts	
	Borne Cosses mécaniques	Borne Cosses à compression	Borne Cosses mécaniques	Borne Cosses à compression
15	2/0–14 AWG	(1) nº 12–10 AWG (1) nº 8–nº 1/0 AWG	2/0–14 AWG	(1) nº 8-nº 1/0 AWG
30	2/0–14 AWG	(1) nº 8–nº 1/0 AWG	350 kcmil–6 AWG	(1) nº 8-nº 1/0 AWG (1) nº 4-300 kcmil (1) 250-350 kcmil
45	2/0–14 AWG 350 kcmil–6 AWG	(1) nº 8–nº 1/0 AWG (1) nº 4-300 kcmil	350 kcmil–6 AWG (1) 600 kcmil–4 AWG ou (2) Égal à 250 kcmil–1/0 AWG	(1) 250–350 kcmil (1) nº 2/0-500 kcmil (2) nº 4-300 kcmil
75	2/0–14 AWG 350 kcmil–6 AWG	(1) nº 8–nº 1/0 AWG (1) nº 4-300 kcmil (1) 250-350 kcmil	(1) 600 kcmil–4 AWG ou (2) Égal à 250 kcmil–1/0 AWG	(2) nº 2/0-500 kcmil (1) 400–600 kcmil Al (2) nº 4-300 kcmil (2) 250-350 kcmil
112,5	350 kcmil–6 AWG (1) 600 kcmil–4 AWG ou (2) Égal à 250 kcmil–1/0 AWG	(1) 250 kcmil–350 kcmil (1) nº 2/0-500 kcmil (2) nº 4-300 kcmil	(2) 350 kcmil–6 AWG (2) 600 kcmil–2 AWG	(3) 250-350 kcmil (3) nº 4-300 kcmil (2) 400–600 kcmil Al
150	(1) 600 kcmil–4 AWG ou (2) Égal à 250 kcmil–1/0 AWG	(1) 250-350 kcmil (2) nº 4-300 kcmil	(3) 350 kcmil–6 AWG (2) 600 kcmil–2 AWG	(3) nº 2/0-500 kcmil (3) nº 4-300 kcmil (3) 400–600 kcmil Al (4) 250-350 kcmil
225	(1) 600 kcmil–2 AWG (2) 600 kcmil–2 AWG	(2) nº 2/0-500 kcmil (2) 400–600 kcmil Al (2) nº 4-300 kcmil	(3) 600 kcmil–2 AWG	(4) nº 4-300 kcmil (4) nº 2/0-500 kcmil
300	(2) 600 kcmil–2 AWG	(3) 250-350 kcmil (3) nº 2/0-500 kcmil (3) 400–600 kcmil Al	(4) 600 kcmil–2 AWG	(6) nº 2/0-500 kcmil (6) 400–600 kcmil Al
500	(3) 600 kcmil–2 AWG	(4) nº 4-300 kcmil (4) nº 2/0-500 kcmil	(6) 600 kcmil–2 AWG	(9) nº 2/0–500kcmil (9) 400–600 kcmil Al
750	(4) 600 kcmil–2 AWG	(6) nº 2/0-500 kcmil (6) 400–600 kcmil Al	(9) 600 kcmil–2 AWG	(15) nº 2/0-500 kcmil (15) 400–600 kcmil Al

REMARQUE : Toutes les bornes permettent l'emploi de cosses NEMA à deux trous.

Consulter le tableau 5 pour les kits de barres-bus de m.à.l.t. Square D.

Tableau 5 : Kits de barres-bus de m.à.l.t. Square D

Nº de catalogue	Cosses de m.à.l.t. par kit	Calibre de fils
DASKGTB100400	1	(4) 2/0–14 toronné
DASKGTB6002000	1	(4) 350 kcmil–6 toronné

FRANÇAIS

© 1992–2018 Schneider Electric Tous droits réservés

Transformateurs de type sec—1000 V et moins
Directives d'utilisation

FRANÇAIS

Schneider Electric Canada, Inc.
5985 McLaughlin Road
Mississauga, ON L5R 1B8 Canada
800-565-6699
www.schneider-electric.ca

Seul un personnel qualifié doit effectuer l'installation, l'utilisation, l'entretien et la maintenance du matériel électrique. Schneider Electric n'assume aucune responsabilité des conséquences éventuelles découlant de l'utilisation de cette documentation.

© 1992–2015 Schneider Electric Tous droits réservés
Schneider Electric et Square D sont des marques commerciales de Schneider Electric Industries SAS ou de ses compagnies affiliées. Toutes les autres marques commerciales utilisées dans ce document sont la propriété de leurs propriétaires respectifs.

43006-850-01 Rév. 03, 07/2018
Remplace 43006-850-01 Rév 02, 11/2015

Schneider Electric USA, Inc.
800 Federal Street
Andover, MA 01810 USA
888-778-2733
www.schneider-electric.us

Standards, specifications, and designs may change, so please ask for confirmation that the information in this publication is current.

Schneider Electric and Square D are trademarks and the property of Schneider Electric SE, its subsidiaries, and affiliated companies. All other trademarks are the property of their respective owners.

© 1992–2018 Schneider Electric
All Rights Reserved

43006-850-01, 07/2018
Replaces 43006-850-01 Rev 02, 11/2015

Importado en México por:

Schneider Electric México, S.A. de C.V.
Av. Ejercito Nacional No. 904
Col. Palmas, Polanco 11560 México, D.F.
55-5804-5000
www.schneider-electric.com.mx

Normas, especificaciones y diseños pueden cambiar, por lo tanto pida confirmación de que la información de esta publicación está actualizada.

Schneider Electric y Square D son marcas comerciales y propiedad de Schneider Electric SE, sus filiales y compañías afiliadas. Todas las otras marcas comerciales son propiedad de sus respectivos propietarios.

© 1992–2018 Schneider Electric
Reservados todos los derechos

43006-850-01, 07/2018
Reemplaza 43006-850-01 Rev 02, 11/2015

Schneider Electric Canada, Inc.
5985 McLaughlin Road
Mississauga, ON L5R 1B8 Canada
800-565-6699
www.schneider-electric.ca

Du fait que les normes, caractéristiques et conceptions peuvent changer, demander confirmation que l'information contenue dans cette publication est à jour.

Schneider Electric et Square D sont des marques commerciales et la propriété de Schneider Electric SE, ses filiales et compagnies affiliées. Toutes les autres marques commerciales sont la propriété de leurs propriétaires respectifs.

© 1992–2018 Schneider Electric
Tous droits réservés

43006-850-01, 07/2018
Remplace 43006-850-01 Rev 02, 11/2015

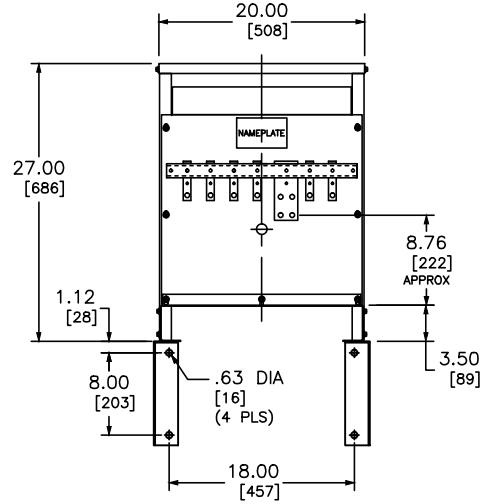

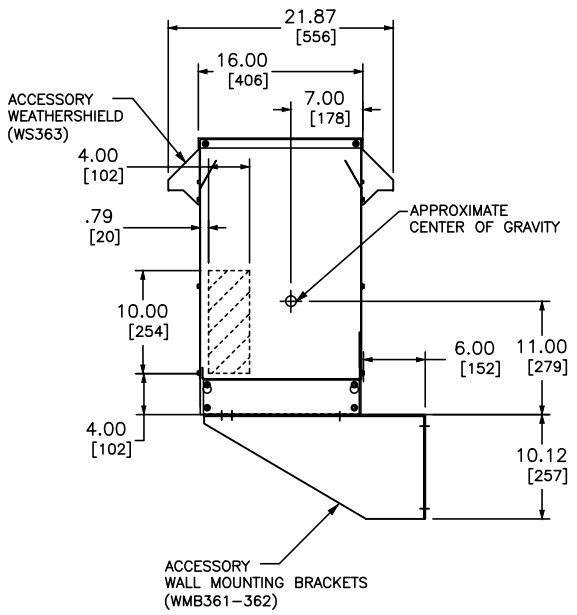

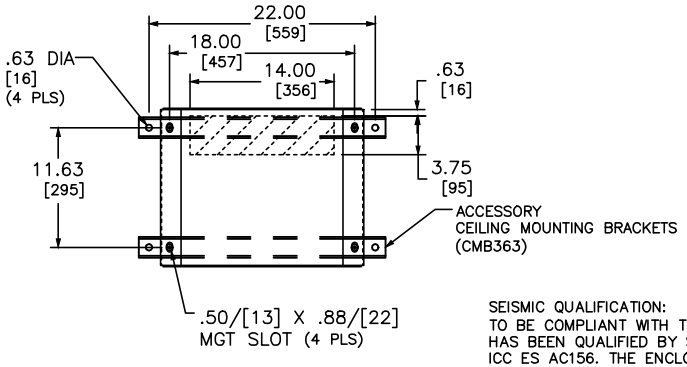

IN EACH PHASE CONNECT TO TAPS	
PRIMARY VOLTS	2–2.5% FCAN 4–2.5% FCBN
504	1
492	2
480	3
468	4
456	5
444	6
432	7

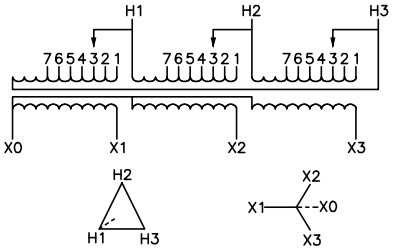

SEISMIC QUALIFICATION:
TO BE COMPLIANT WITH THE SEISMIC REQUIREMENTS OF ASCE/SEI 7, THIS UNIT HAS BEEN QUALIFIED BY SHAKE TABLE TESTING THROUGH SELF CERTIFICATION TO ICC ES AC156. THE ENCLOSURE SHOWN ABOVE IS 17D. CONTACT YOUR LOCAL SCHNEIDER ELECTRIC/SQUARE D REPRESENTATIVE FOR RELATED QUESTIONS.

TRANSFORMER SPECIFICATIONS:

30 KVA 3Ø 60 HZ
PRIMARY VOLTAGE 480 DELTA
SECONDARY VOLTAGE 208Y/120
150°C RISE ABOVE 40°C AMBIENT
220°C INSULATION SYSTEM
ALUMINUM WINDINGS
APPROXIMATE WEIGHT: 260 LBS
GUARANTEED SOUND LEVEL: 45 dB
EFFICIENCY @35%: 97.5% AVG. CONFORMS TO NEMA TP 1 – 2002 AND CSA C802.2

DUAL DIMENSIONS: INCHES
MILLIMETERS

NOTES:
1) cULus LISTED (MEETING UL 1561 AND CSA C22.2)
2) NEMA 2 VENTILATED ENCLOSURE
ENCLOSURE RATED FOR NEMA 3R WHEN OPTIONAL WEATHERSHIELD ACCESSORY IS INSTALLED.
3) MINIMUM CLEARANCE OF 3.00/[76] BETWEEN VENT OPENINGS, WALL OR OTHER OBSTRUCTION
4) SHADED AREAS DENOTE CUSTOMER CONDUIT ENTRANCE LOCATIONS, AVAILABLE BOTH SIDES AND BOTTOM

LOW VOLTAGE ENERGY EFFICIENT, TP1
DRY–TYPE TRANSFORMER
CATALOG NO EE30T3H
3 PHASE, 30kVA, AL
PRIMARY 480 DELTA ,SECONDARY 208/120

SQUARE D
by Schneider Electric

DWG# NO. 6312–0002

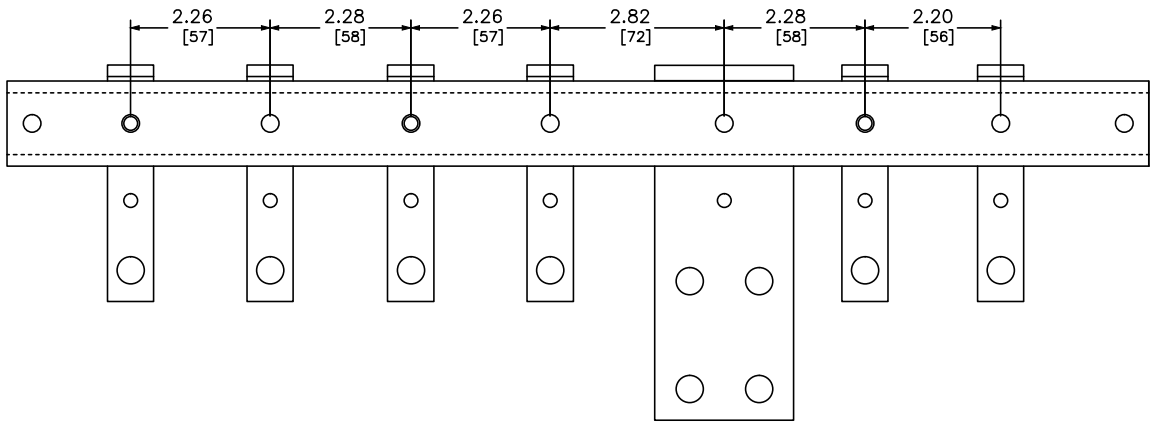

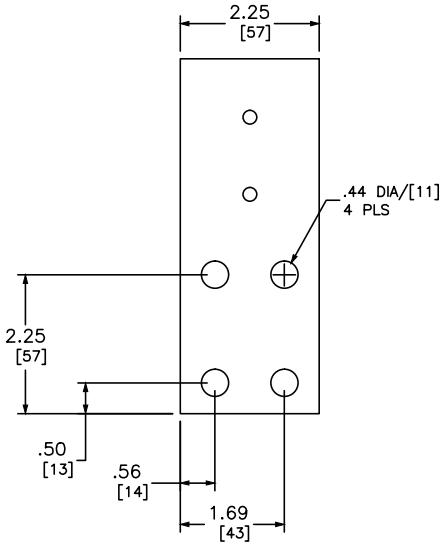

XO TERMINAL DETAIL

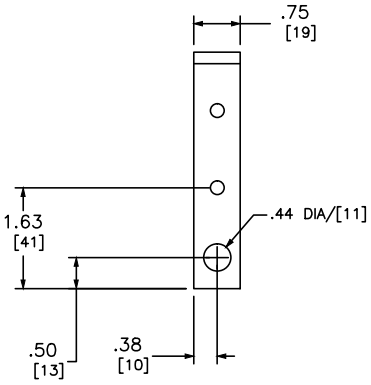

X TERMINAL DETAIL

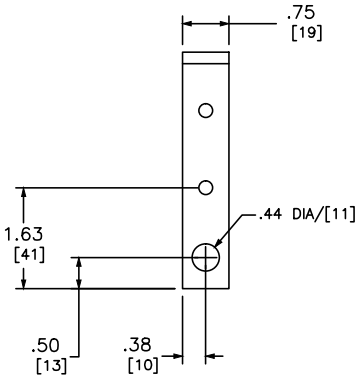

H TERMINAL DETAIL

DUAL DIMENSIONS: INCHES
MILLIMETERS

LOW VOLTAGE ENERGY EFFICIENT, TP1
DRY–TYPE TRANSFORMER
CATALOG NO EE30T3H
3 PHASE, 30kVA, AL
PRIMARY 480 DELTA ,SECONDARY 208/120

SQUARE D
by Schneider Electric

DWG# NO. 6312–0002

Data Bulletin

Replaces 7400DB0702 11/2007

Energy Efficient Transformers Technical Data
Class 7400

Retain for future use.

Inrush Current Data

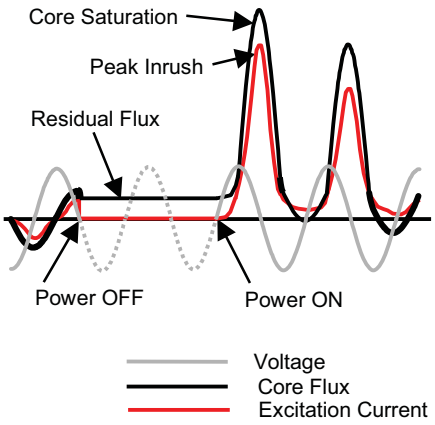

The tables in this bulletin include inrush current data for low voltage transformers. The values supplied by Schneider Electric can be plotted against the circuit breaker and fuse curves; they are RMS values. What follows is a brief description of factors affecting transformer inrush current.

When a transformer is turned off, the core typically remains magnetized at a point called the 'residual' or 'remanent' flux level. That's because the disconnect device, typically a mechanical switch, will interrupt excitation current, which will reduce to zero when contact arcing extinguishes.

Zero current corresponds to the points of residual flux (B_r) on the core B-H curve. An exception to this is in the case of a motor on the load side of the transformer, which will generate a gradually diminishing voltage as it coasts to a stop, reducing the flux in the transformer core to essentially zero.

The residual flux point will vary with core steel material. Non-oriented steels will have lower residual flux levels than oriented grain steel. Thus, the higher the steel quality, the higher the potential inrush.

Other factors influencing inrush are coil-winding geometry, that is, the length and diameter of coils and the number of turns in the energized winding. In general, the smaller the diameter (or mean length of turn), the higher the inrush. Thus, windings that are wound on the inside of the coil are subject to higher energizing inrush than windings wound on the outside.

Typical transformer designs specify the winding that is intended as the primary to be wound over the secondary winding(s) and have the largest coil diameter. If a transformer is energized from the secondary (back-fed), then higher maximum inrush can be expected. As a general rule, back-feeding results in an inrush current two to three times higher than that of a normally-fed transformer.

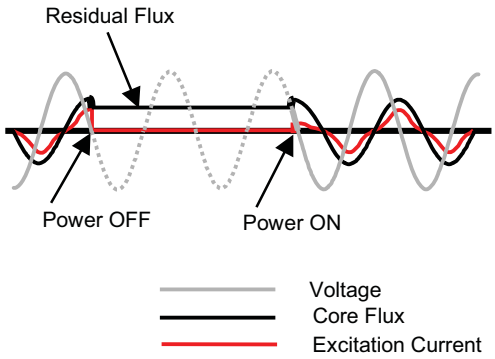

Voltage waveform switching angles profoundly affect transformer inrush. Maximum inrush occurs when power is applied at voltage zero crossing. Minimum (or zero) inrush will occur when the voltage is at a point where the continuation excitation current matches direction and magnitude of the residual flux in the core.

When power is reestablished at any other point, the inrush will be less than the peak value obtained in the above formula. In fact, it could be zero given the condition that power is applied at such a time so as to not require the core flux to be driven above the saturation point.

© 2007–2009 Schneider Electric All Rights Reserved

Effects of Energy Efficiency on Inrush Current

Introduction

Effective January 1, 2007 energy efficiency regulations from DOE became mandatory. In general, the efficiencies required are higher than those under previous regulations. The efficiency requirements are also different in that:

- They are evaluated at 35% load for low voltage transformers and 50% load for medium voltage transformers;
- Although not specified as part of the regulation, the new designs needed to fit existing enclosures to make the transition as transparent and painless as possible;
- The new designs had to meet the same dielectric, impedance, temperature rise, and noise specifications as before.

These regulatory and practical requirements have changed transformer design philosophy, resulting in a significant impact on the inrush current of the new designs. The following paragraphs explore the impact of these changed parameters on the inrush currents. It should be emphasized that these parameters apply to all transformer manufacturers, so all members of the industry are basically affected the same way.

Inrush Current

The simple, historical equation used for computing maximum inrush current of a transformer is:

$$I_{max} = 2020*h*A_c*(B_{res}+ 2*B_{max}- B_{sat})/(N* A_s)$$

Where,

I_{max} = maximum peak inrush current in amperes

h = exciting coil height in inches

A_c = area of the core in square inches

B_{res} = residual core magnetic field in kilogauss

B_{max} = maximum operating flux density of the transformer in kilogauss

B_{sat} = saturation flux density of the transformer core in kilogauss: approximately 20.2 KG

N = excitation winding turns in series

A_S = effective area of the excitation coil in square inches

There are more accurate and improved methods available to calculate the inrush current. However, for understanding the impact of various parameters, this equation provides excellent qualitative insight.

How Energy Efficiency Affects the Parameters

In general the regulation efficiencies are higher than the pre-regulation efficiencies at the defined points, that is, a 35% load for low voltage transformers and a 50% load for medium voltage transformers. It is well known that the maximum efficiency of a transformer occurs at a load point when the core loss equals the load loss. It is natural, then, to design the transformers so that maximum efficiency occurs close to a load point where the regulation efficiency is measured. The net effect is that the loss ratio = (load loss at full load)/core loss is larger than the pre-regulation loss ratio, more so for the low voltage transformers. The upshot of this dynamic is that the core loss now needs to be considerably smaller than the pre-regulation core loss. All this needs to happen while all other constraints mentioned in the Introduction section above are met.

© 2007–2009 Schneider Electric All Rights Reserved

Here are some of the actions a designer can take:

1. Use larger cores and reduce the flux density. This approach has limitations because:
   - — It increases the core and coil costs and becomes unproductive beyond a certain point where reduction in core loss is more than matched by the increase in coil loss;
   - — The impedance increases. It can be reduced by increasing the coil length, but this is limited by the overall enclosure dimensions.
2. Use smaller cores while keeping the flux density approximately the same. This has limitations because load loss and impedance increase.

Both actions 1 and 2 are possible only if the original design needs only a small improvement in the core loss, and the impedance and enclosure dimensions are not a limiting factor. If the designs are changed in this manner, the affect on inrush current is minimal. However, in the majority of cases, the improvement in core loss obtainable by these actions is not sufficient. Thus, one or more of the following actions are also required:

- Use of better grade magnetic steel (lower watts/lb. at given density), typically operated at higher flux densities. This increases B_{max} which, referring to the equation on page 2, increases the inrush current.
- Change the magnetic steel from non-oriented to oriented steel. Oriented steel has much better core loss characteristics. It is possible to stay with better quality, non-oriented steel at the lower kVA end of the spectrum. The mid-kVA spectrum typically will require a switch to oriented steel, which also has a higher residual flux density. The residual flux density also increases with operating flux density. Referring to the equation on page 2 again, both of these factors increase the inrush current.
- Use of better core construction techniques such as miter joints, step lap miter cores, etc. These construction techniques allow the use of still higher flux densities while keeping the core loss within limits. The higher B_{max} increases the residual flux density further, and both together increase the inrush current.

K-factor Rated Transformers and Low Temperature Rise Transformers

Both K-factor and low temperature rise transformers are required to meet the same energy efficiencies as the conventional transformers, with minor differences: K-factor rated transformers have to meet the efficiencies at a K-factor of 1 and low temperature rise transformers have to meet them at a slightly lower temperature.

© 2007–2009 Schneider Electric All Rights Reserved

Typical Performance Data

Data is supplied for informational purposes only; no guarantee of losses or performance is implied or made. Actual losses and performance may vary from values shown.

Units are UL Listed to Standard 1561 and Certified to CSA Standard C22.2 No. 47-M90 in UL file E6868.

Table 1: Ventilated Energy Efficient Dry Type Transformer; 480 Delta Primary to 208Y/120 Secondary; Aluminum Wound

	Losses in Watts						IZ Related Data			
Catalog Number	**Coil Loss (load loss)**	**Core Loss (no load)**	**25% Load**	**50% Load**	**75% Load**	**100% Load**	**%IZ**	**%IX**	**X/R**	**Inrush x Rated Primary Current**
150 °C Rise										
EE15T3H	652	95	136	258	462	747	5.1	2.7	0.6	10.1
EE30T3H	1170	133	206	426	791	1303	5.5	3.9	1.0	7.5
EE45T3H	1836	171	286	630	1204	2007	6.0	4.4	1.1	6.3
EE75T3H	2518	253	410	883	1669	2771	3.7	1.6	0.5	10.0
EE112T3H	3366	379	589	1221	2272	3745	5.2	4.2	1.4	7.8
EE150T3H	4385	467	741	1563	2934	4852	6.0	5.2	1.8	6.9
EE225T3H	5108	633	952	1910	3506	5741	6.5	6.1	2.7	9.8
EE300T3H	6584	831	1243	2477	4535	7415	5.9	5.5	2.5	8.7
EE500T68H	8662	1320	1861	3486	8358	9982	6.1	5.9	3.4	9.1
EE750T68H	9495	1925	2518	4299	9640	11420	5.4	5.2	4.1	8.2
EE1000T77H	22000	1700	3075	7200	19575	23700	5.7	5.3	2.4	4.2
115 °C Rise										
EE15T3HF	561	102	137	242	418	663	5.3	3.8	1.0	8.0
EE30T3HF	1148	149	221	436	795	1297	5.3	3.7	1.0	7.4
EE45T3HF	1430	202	291	560	1006	1632	5.2	4.1	1.3	6.9
EE75T3HF	2463	274	428	890	1659	2737	6.3	5.4	1.6	5.3
EE112T3HF	2800	407	582	1107	1982	3207	5.3	4.7	1.9	12.2
EE150T3HF	3341	506	715	1341	2385	3847	5.1	4.6	2.7	10.5
EE225T3HF	4811	644	945	1847	3350	5455	6.0	5.6	2.6	8.9
EE300T68HF	3439	1320	1535	2180	3255	4759	3.7	3.5	3.1	14.6
EE500T68HF	8147	1334	1843	3371	7954	9481	6.6	6.4	4.0	11.1
EE750T68HF	10492	1618	2274	4241	10143	12110	5.5	5.3	3.8	7.8
80 °C Rise										
EE15T3HB	503	102	133	228	385	605	5.1	3.8	1.1	8.0
EE30T3HB	664	171	212	337	544	835	3.7	2.9	1.3	9.5
EE45T3HB	822	253	304	458	715	1075	2.1	1.0	0.5	16.7
EE75T3HB	1356	379	464	718	1142	1735	3.3	2.8	1.5	11.7
EE112T3HB	1806	477	590	928	1493	2283	3.7	3.3	2.1	15.0
EE150T3HB	2241	524	664	1085	1785	2766	3.1	2.7	1.8	17.2
EE225T3HB	3013	776	964	1529	2470	3788	4.2	4.0	3.0	11.8
EE300T68HB	3530	1006	1227	1889	2992	4536	4.8	4.7	4.0	10.7
EE500T68HB	3432	1925	2140	2783	4714	5357	3.6	3.5	5.1	12.3

© 2007–2009 Schneider Electric All Rights Reserved

Table 2: Ventilated Energy Efficient Dry Type Transformer; 480 Delta Primary to 480Y/277 Secondary; Aluminum Wound

	Losses in Watts						IZ Related Data			
Catalog Number	**Coil Loss (load loss)**	**Core Loss (no load)**	**25% Load**	**50% Load**	**75% Load**	**100% Load**	**%IZ**	**%IX**	**X/R**	**Inrush x Rated Primary Current**
150 °C Rise										
EE15T1814H	628	96	135	252	449	723	4.8	2.3	0.6	11.0
EE30T1814H	1149	155	227	442	801	1304	4.7	2.7	0.7	10.1
EE45T1814H	1677	196	301	615	1139	1873	5.7	4.3	1.2	8.0
EE75T1814H	3170	187	385	980	1970	3357	4.5	1.6	0.4	9.6
EE112T1814H	3472	356	573	1224	2309	3828	5.1	4.1	1.3	11.9
EE150T1814H	3888	488	731	1459	2674	4375	3.3	2.1	0.8	19.7
EE225T1814H	5739	574	932	2009	3802	6313	4.0	3.1	1.2	11.9
EE300T1814H	5789	864	1226	2312	4121	6654	4.9	4.5	2.3	12.3
EE500T1814H	9176	1385	1959	3679	8841	10561	5.8	5.5	3.0	8.5
EE750T1814H	12811	1562	2363	4765	11971	14373	6.2	6.0	3.5	7.5
115 °C Rise										
EE15T1814HF	647	95	135	257	459	742	5.7	3.7	0.9	9.1
EE30T1814HF	676	196	238	365	576	871	3.7	2.9	1.3	12.0
EE45T1814HF	1040	213	278	473	798	1253	2.5	1.0	0.4	16.0
EE75T1814HF	1407	356	444	707	1147	1762	3.3	2.7	1.5	17.9
EE112T1814HF	1993	488	612	986	1609	2481	2.4	1.6	0.9	26.2
EE150T1814HF	2427	557	709	1164	1922	2984	2.6	2.1	1.3	16.9
EE225T1814HF	2968	864	1050	1606	2534	3832	3.6	3.4	2.5	13.9
EE300T76HF	4759	952	1249	2142	3629	5711	4.5	4.2	2.6	10.8
80 °C Rise										
EE15T1814HB	580	95	131	240	421	675	5.4	3.7	1.0	9.1
EE30T1814HB	606	196	234	347	537	802	3.5	2.9	1.4	12.0
EE45T1814HB	939	213	271	447	741	1152	2.3	1.0	0.5	16.0
EE75T1814HB	1270	356	435	673	1070	1625	3.2	2.7	1.6	17.9
EE112T1814HB	1788	488	599	935	1493	2275	2.2	1.6	1.0	26.2
EE150T1814HB	2044	557	685	1068	1707	2601	2.5	2.1	1.5	16.9
EE225T1814HB	2662	864	1030	1530	2362	3526	3.6	3.4	2.9	13.9

© 2007–2009 Schneider Electric All Rights Reserved

Table 3: Ventilated Energy Efficient Dry Type Transformer; 208 Delta Primary to 480Y/277 Secondary; Aluminum Wound

	Losses in Watts						IZ Related Data			
Catalog Number	**Coil Loss (load loss)**	**Core Loss (no load)**	**25% Load**	**50% Load**	**75% Load**	**100% Load**	**%IZ**	**%IX**	**X/R**	**Inrush x Rated Primary Current**
150 °C Rise										
EE15T212H	568	105	140	247	424	672	4.2	1.9	0.5	11.5
EE30T212H	1554	112	209	501	986	1666	6.5	4.0	0.8	6.8
EE45T212H	1734	199	308	633	1174	1933	6.0	4.6	1.2	6.9
EE75T212H	2516	215	373	844	1631	2732	6.9	6.0	1.8	8.8
EE112T212H	3412	371	584	1223	2289	3782	5.4	4.5	1.5	11.7
EE150T212H	3942	473	719	1459	2691	4415	6.4	5.8	2.2	10.0
EE225T212H	6285	581	974	2153	4117	6867	4.7	3.7	1.3	13.9
EE300T212H	5986	839	1213	2335	4206	6825	5.1	4.7	2.4	9.6
EE500T212H	8894	1271	1827	3495	8498	10165	6.5	6.3	3.5	8.9
EE750T212H	11132	1716	2412	4499	10761	12848	5.5	5.3	3.6	8.1
115 °C Rise										
EE15T212HF	517	105	137	234	396	622	3.9	1.9	0.6	11.5
EE30T212HF	699	199	243	374	592	898	3.8	3.1	1.3	10.3
EE45T212HF	821	215	267	421	677	1037	4.1	3.6	2.0	14.7
EE75T212HF	1382	371	457	716	1148	1752	3.5	3.0	1.6	17.6
EE112T212HF	2021	473	599	978	1610	2494	4.7	4.4	2.4	13.4
EE150T212HF	2534	546	704	1179	1971	3080	2.7	2.1	1.2	20.8
EE225T212HF	3069	839	1030	1606	2565	3907	3.8	3.5	2.6	12.8
EE300T212HF	4109	1036	1293	2063	3347	5145	3.3	3.0	2.2	12.1
EE500T212HF	7711	1279	1761	3207	7544	8990	6.2	6.0	3.9	8.0
80 °C Rise										
EE15T212HB	462	105	133	220	364	566	3.6	1.9	0.6	11.5
EE30T212HB	627	199	238	356	552	826	3.7	3.1	1.5	10.3
EE45T212HB	745	215	262	402	635	961	4.0	3.6	2.2	14.7
EE75T212HB	1240	371	448	680	1068	1610	3.4	3.0	1.8	17.6
EE112T212HB	1843	488	603	949	1525	2331	4.2	3.9	2.4	12.7
EE150T212HB	2300	546	689	1120	1839	2845	2.6	2.1	1.4	20.8
EE225T212HB	2771	839	1012	1531	2397	3609	3.7	3.5	2.9	12.8
EE300T212HB	4137	968	1227	2002	3295	5105	6.0	5.8	4.2	7.4
EE500T212HB	5099	1488	1807	2763	5631	6587	4.5	4.4	4.3	9.2

© 2007–2009 Schneider Electric All Rights Reserved

Table 4: Ventilated Energy Efficient Dry Type Transformer; 480 Wye Primary to 240 D with 120 CT Secondary; Aluminum Wound

	Losses in Watts						IZ Related Data			
Catalog Number	Coil Loss (load loss)	Core Loss (no load)	25% Load	50% Load	75% Load	100% Load	%IZ	%IX	X/R	Inrush x Rated Primary Current
150 °C Rise										
EE15T151HCT	697	71	115	246	463	768	5.3	2.5	0.5	13.0
EE30T151HCT	1282	134	214	454	855	1416	5.6	3.7	0.9	11.9
EE45T151HCT	1677	185	290	604	1128	1862	5.7	4.3	1.1	11.0
EE75T151HCT	3149	226	423	1014	1998	3375	4.7	2.0	0.5	7.4
EE112T151HCT	3008	396	584	1148	2088	3404	4.3	3.4	1.3	18.6
EE150T151HCT	3876	456	698	1425	2636	4332	3.1	1.7	0.7	12.0
EE225T151HCT	5106	650	969	1927	3522	5756	3.8	3.1	1.4	18.7
EE300T151HCT	6074	863	1242	2381	4280	6937	4.6	4.2	2.1	14.6
EE500T151HCT	7350	1178	1637	3016	7150	8528	5.1	4.9	3.3	11.7
EE750T151HCT	12341	1556	2327	4641	11583	13897	5.6	5.3	3.2	10.3

Table 5: Ventilated Energy Efficient Dry Type Transformer; 600 Delta Primary to 208Y/120 Secondary; Aluminum Wound

	Losses in Watts						IZ Related Data			
Catalog Number	Coil Loss (load loss)	Core Loss (no load)	25% Load	50% Load	75% Load	100% Load	%IZ	%IX	X/R	Inrush x Rated Primary Current
150 °C Rise										
EE15T65H	573	101	137	244	424	674	4.5	2.4	0.6	10.7
EE30T65H	1374	134	220	478	907	1508	5.9	3.8	0.8	7.3
EE45T65H	1922	180	300	660	1261	2102	6.4	4.8	1.1	6.4
EE75T65H	2370	258	406	851	1591	2628	3.6	1.7	0.5	8.6
EE112T65H	3313	361	568	1189	2224	3674	5.0	4.1	1.4	10.6
EE150T65H	4457	457	735	1571	2964	4913	3.7	2.2	0.8	15.2
EE225T65H	6546	549	958	2185	4231	7095	5.1	4.2	1.4	12.2
EE300T65H	6925	826	1259	2558	4722	7751	5.6	5.1	2.2	8.7

Table 6: Ventilated Energy Efficient Dry Type Transformer; 208 Delta Primary to 208Y/120 Secondary; Aluminum Wound

	Losses in Watts						IZ Related Data			
Catalog Number	Coil Loss (load loss)	Core Loss (no load)	25% Load	50% Load	75% Load	100% Load	%IZ	%IX	X/R	Inrush x Rated Primary Current
150 °C Rise										
EE15T211H	675	99	141	268	479	774	5.1	2.3	0.5	11.7
EE30T211H	1392	105	192	453	888	1497	6.1	4.0	0.9	7.1
EE45T211H	1693	212	318	636	1165	1905	5.7	4.3	1.2	7.3
EE75T211H	2576	258	419	902	1707	2834	3.8	1.7	0.5	9.5
EE112T211H	3465	355	572	1222	2304	3820	5.3	4.3	1.4	10.7
EE150T211H	4181	481	742	1526	2832	4661	3.6	2.3	0.8	18.7
EE225T211H	6583	542	953	2188	4245	7125	4.9	4.0	1.4	11.7
EE300T211H	6356	768	1165	2357	4343	7124	5.2	4.8	2.3	8.7
EE500T211H	8554	1387	1921	3525	8337	9941	6.2	6.0	3.5	9.2
EE750T211H	11676	1511	2240	4430	10997	13187	6.1	5.9	3.8	7.3

© 2007–2009 Schneider Electric All Rights Reserved

Table 7: Ventilated Energy Efficient Dry Type Transformer; 480 Delta Primary to 208Y/120 Secondary; Copper Wound

	Losses in Watts						IZ Related Data			
Catalog Number	**Coil Loss (load loss)**	**Core Loss (no load)**	**25% Load**	**50% Load**	**75% Load**	**100% Load**	**%IZ**	**%IX**	**X/R**	**Inrush x Rated Primary Current**
150 °C Rise										
EE15T3HCU	550	73	107	210	382	623	4.6	2.8	0.8	5.5
EE30T3HCU	1019	160	224	415	733	1179	4.6	3.2	0.9	7.8
EE45T3HCU	1390	210	297	558	992	1600	4.4	3.2	1.0	7.7
EE75T3HCU	2477	253	408	872	1646	2730	3.5	1.3	0.4	8.3
EE112T3HCU	2566	346	506	988	1789	2912	3.9	3.2	1.4	14.0
EE150T3HCU	3566	482	705	1374	2488	4048	4.7	4.1	1.7	11.5
EE225T3HCU	5264	529	858	1845	3490	5793	3.8	3.0	1.3	12.7
EE300T3HCU	6014	831	1207	2335	4214	6845	4.8	4.3	2.2	10.3
EE500T68HCU	6629	1367	1781	3024	6753	7996	4.1	3.9	3.0	10.3
EE750T68HCU	9196	1511	2086	3810	8983	10707	4.7	4.6	3.7	8.7
EE1000T77HCU	21000	1790	3103	7040	18853	22790	6.3	5.9	2.8	4.2
115 °C Rise										
EE15T3HFCU	578	90	126	234	415	668	5.0	3.2	0.8	9.0
EE30T3HFCU	562	210	245	350	526	772	2.8	2.1	1.1	11.5
EE45T3HFCU	811	253	304	456	709	1064	2.0	0.8	0.4	14.4
EE75T3HFCU	2115	230	362	759	1420	2345	3.4	1.9	0.7	8.3
EE112T3HFCU	2106	353	485	880	1538	2459	3.7	3.2	1.7	12.7
EE150T3HFCU	2177	481	617	1025	1705	2658	2.5	2.0	1.4	19.8
EE225T3HFCU	4015	575	826	1578	2833	4590	3.8	3.4	1.9	13.2
EE300T68HFCU	5006	833	1146	2084	3648	5838	4.8	4.5	2.7	12.2
EE500T68HFCU	6026	1367	1744	2874	6263	7393	4.1	3.9	3.3	10.5
EE750T68HFCU	8914	1617	2174	3846	8860	10531	4.7	4.5	3.8	8.7
80 °C Rise										
EE15T3HBCU	520	90	123	220	383	610	4.7	3.2	0.9	9.0
EE30T3HBCU	505	210	242	336	494	715	2.7	2.1	1.3	11.5
EE45T3HBCU	729	253	299	435	663	982	1.8	0.8	0.5	14.4
EE75T3HBCU	933	346	404	579	871	1279	2.5	2.1	1.7	21.0
EE112T3HBCU	1568	434	532	826	1317	2003	2.2	1.7	1.2	25.2
EE150T3HBCU	2015	509	635	1013	1642	2524	2.3	1.9	1.4	17.9
EE225T3HBCU	2712	608	778	1286	2134	3320	3.6	3.4	2.8	13.2
EE300T68HBCU	3381	968	1179	1813	2870	4349	4.3	4.1	3.7	11.9
EE500T68HBCU	4619	1440	1728	2594	5192	6058	5.0	4.9	5.3	9.8
EE750T77HBCU	6534	1691	2099	3325	7000	8225	5.4	5.3	6.1	7.7

© 2007–2009 Schneider Electric All Rights Reserved

Table 8: Ventilated Energy Efficient Dry Type Transformer; 480 Delta Primary to 480Y/277 Secondary; Copper Wound

	Losses in Watts						IZ Related Data			
Catalog Number	**Coil Loss (load loss)**	**Core Loss (no load)**	**25% Load**	**50% Load**	**75% Load**	**100% Load**	**%IZ**	**%IX**	**X/R**	**Inrush x Rated Primary Current**
150 °C Rise										
EE15T1814HCU	597	88	125	237	424	685	5.0	3.0	0.8	8.0
EE30T1814HCU	977	117	178	361	666	1093	4.8	3.6	1.1	6.2
EE45T1814HCU	1509	184	278	561	1032	1692	4.5	3.0	0.9	9.6
EE75T1814HCU	2050	309	437	822	1462	2359	3.2	1.6	0.6	12.7
EE112T1814HCU	2647	381	546	1043	1870	3028	3.8	3.0	1.3	9.9
EE150T1814HCU	3845	428	668	1389	2590	4273	3.4	2.2	0.9	17.3
EE225T1814HCU	4872	561	866	1779	3302	5433	3.4	2.6	1.2	9.6
EE300T1814HCU	6054	782	1160	2295	4187	6835	5.6	5.2	2.6	8.5
EE500T76HCU	5567	1137	1485	2529	5660	6704	4.9	4.8	4.3	8.9
EE750T76HCU	10636	1632	2297	4291	10274	12268	4.2	4.0	2.8	8.5
115 °C Rise										
EE15T1814HFCU	601	87	125	237	425	688	5.7	4.1	1.0	3.3
EE30T1814HFCU	613	184	222	337	528	796	2.9	2.0	1.0	14.4
EE45T1814HFCU	671	309	351	477	686	980	1.8	1.0	0.7	22.1
EE75T1814HFCU	1075	381	448	650	985	1456	2.5	2.0	1.4	14.8
EE112T1814HFCU	1976	428	551	922	1539	2403	2.4	1.7	1.0	23.0
EE150T1814HFCU	1998	525	649	1024	1648	2522	5.1	5.0	3.7	13.3
EE225T1814HFCU	3095	782	975	1555	2523	3877	4.1	3.9	2.8	11.3
EE300T76HFCU	1822	1137	1251	1592	2162	2959	2.9	2.9	4.7	14.8
EE500T76HFCU	4913	1306	1613	2534	5298	6219	4.9	4.8	4.9	9.2
80 °C Rise										
EE15T1814HBCU	541	87	121	222	391	628	5.5	4.1	1.1	3.3
EE30T1814HBCU	555	184	218	322	496	738	2.7	2.0	1.1	14.4
EE45T1814HBCU	604	309	347	460	649	913	1.7	1.0	0.7	22.1
EE75T1814HBCU	973	381	442	624	928	1354	2.4	2.0	1.5	14.8
EE112T1814HBCU	1769	428	538	870	1423	2197	2.3	1.7	1.1	23.0
EE150T1814HBCU	1808	525	638	977	1542	2333	5.1	5.0	4.1	13.3
EE225T1814HBCU	2785	782	956	1478	2348	3567	4.1	3.9	3.1	11.3
EE300T76HBCU	3350	893	1102	1731	2777	4243	4.9	4.8	4.3	10.4

© 2007–2009 Schneider Electric All Rights Reserved

Table 9: Ventilated Energy Efficient Dry Type Transformer; 240 x 480 Primary to 120/240 Secondary; Aluminum Wound

	Losses in Watts						IZ Related Data			
Catalog Number	Coil Loss (load loss)	Core Loss (no load)	25% Load	50% Load	75% Load	100% Load	%IZ	%IX	X/R	Inrush x Rated Primary Current
150 °C Rise										
EE15S3H	592	60	97	208	393	652	6.1	4.7	1.2	10.3
EE25S3H	831	73	125	281	540	904	5.9	4.9	1.5	9.1
EE37S3H	1321	108	191	438	851	1429	6.1	5.0	1.4	7.9
EE50S3H	1295	164	245	488	892	1459	5.1	4.4	1.7	9.6
EE75S3H	1968	187	310	679	1294	2155	5.7	5.0	1.9	7.6
EE100S3H	2100	265	396	790	1446	2365	4.7	4.2	2.0	9.9
EE167S3H	2963	426	611	1166	2092	3389	3.9	3.5	2.0	16.7
EE250S3H	4431	596	873	1704	3088	5027	5.7	5.4	3.0	12.2
EE333S3H	4513	828	1110	1956	4495	5341	6.3	6.2	4.6	9.5
115 °C Rise										
EE15S3HF	271	73	90	141	226	344	3.5	2.9	1.6	15.1
EE25S3HF	532	108	141	241	407	640	4.0	3.4	1.6	11.9
EE37S3HF	2087	164	294	686	1338	2251	6.5	3.3	0.6	12.8
EE50S3HF	793	187	237	385	633	980	3.7	3.4	2.1	11.3
EE75S3HF	1071	265	332	533	867	1336	3.5	3.2	2.2	14.9
EE100S3HF	1409	327	415	679	1120	1736	3.5	3.2	2.3	17.9
EE167S3HF	1918	547	667	1027	1626	2466	3.9	3.7	3.2	17.6
80 °C Rise										
EE15S3HB	248	64	79	126	203	312	1.7	0.0	0.0	12.3
EE25S3HB	478	108	138	227	377	586	3.9	3.4	1.8	11.9
EE37S3HB	1872	164	281	632	1217	2036	6.0	3.3	0.7	12.8
EE50S3HB	711	187	231	365	587	898	3.6	3.4	2.4	11.3
EE75S3HB	961	265	325	505	805	1226	3.4	3.2	2.5	14.9
EE100S3HB	1264	327	406	643	1038	1591	3.4	3.2	2.5	17.9
EE167S3HB	1721	547	655	977	1515	2268	3.8	3.7	3.6	17.6

Table 10: Ventilated Energy Efficient Dry Type Transformer; 240 x 480 Primary to 120/240 Secondary; Copper Wound

	Losses in Watts						IZ Related Data			
Catalog Number	Coil Loss (load loss)	Core Loss (no load)	25% Load	50% Load	75% Load	100% Load	%IZ	%IX	X/R	Inrush x Rated Primary Current
150 °C Rise										
EE15S3HCU	406	79	104	181	307	485	4.8	4.0	1.5	13.6
EE25S3HCU	807	85	135	287	539	892	4.9	3.7	1.1	10.3
EE37S3HCU	1004	129	192	380	694	1133	4.6	3.7	1.4	6.6
EE50S3HCU	1455	136	227	500	954	1591	6.8	6.1	2.1	7.9
EE75S3HCU	2046	153	281	664	1304	2199	4.9	4.1	1.5	10.2
EE100S3HCU	2750	216	388	904	1763	2966	6.1	5.5	2.0	7.3
EE167S3HCU	3133	432	628	1215	2195	3566	4.1	3.6	1.9	11.6
EE250S3HCU	3943	532	778	1518	2750	4475	5.9	5.7	3.6	11.6
115 °C Rise										
EE15S3HFCU	264	85	102	151	234	349	2.8	2.2	1.3	17.2
EE25S3HFCU	406	129	154	230	357	535	3.0	2.5	1.5	9.8
EE37S3HFCU	744	136	182	322	554	880	5.0	4.6	2.3	10.5
EE50S3HFCU	827	153	205	360	618	980	3.2	2.7	1.7	15.3
EE75S3HFCU	1144	245	316	531	888	1389	4.4	4.1	2.7	11.1
EE100S3HFCU	2011	274	400	777	1405	2285	5.1	4.7	2.3	13.2
EE167S3HFCU	1599	532	632	932	1432	2131	3.9	3.8	4.0	17.4
80 °C Rise										
EE15S3HBCU	238	85	100	144	219	323	2.7	2.2	1.4	17.2
EE25S3HBCU	365	129	152	220	334	494	2.7	2.5	2.5	9.9
EE37S3HBCU	669	136	178	303	513	805	4.9	4.6	2.6	10.5
EE50S3HBCU	744	153	199	339	571	897	3.1	2.7	1.8	15.3
EE75S3HBCU	1271	245	324	563	960	1516	4.4	4.1	2.4	11.1
EE100S3HBCU	919	432	489	662	949	1351	2.3	2.2	2.3	19.4
EE167S3HBCU	1439	532	622	892	1342	1971	3.9	3.8	4.4	17.4

© 2007–2009 Schneider Electric All Rights Reserved

Table 11: Ventilated Energy Efficient K4 Rated Transformer; 480 Delta Primary to 208Y/120 Secondary; Aluminum Wound

	Losses in Watts						IZ Related Data			
Catalog Number	**Coil Loss (load loss)**	**Core Loss (no load)**	**25% Load**	**50% Load**	**75% Load**	**100% Load**	**%IZ**	**%IX**	**X/R**	**Inrush x Rated Primary Current**
150 °C Rise										
EE15T3HISNL	546	107	141	244	414	653	4.3	2.3	0.6	10.7
EE30T3HISNL	897	175	232	400	680	1072	4.8	3.8	1.3	8.3
EE45T3HISNL	1442	221	311	581	1032	1663	4.7	3.4	1.1	8.9
EE75T3HISNL	1356	379	464	718	1142	1735	3.3	2.8	1.5	7.8
EE112T3HISNL	3050	375	565	1137	2090	3425	5.0	4.2	1.5	15.8
EE150T3HISNL	2836	524	702	1233	2119	3360	3.5	2.9	1.5	17.0
EE225T3HISNL	3662	776	1004	1691	2835	4437	4.3	4.0	2.4	7.4
EE300T68HISNL	4550	989	1273	2127	3548	5539	4.7	4.5	3.0	10.9
EE500T68HISNL	8336	1277	1798	3361	8050	9613	5.7	5.5	3.3	10.3
115 °C Rise										
EE15T3HFISNL	497	107	138	232	387	605	4.0	2.3	0.7	10.7
EE30T3HFISNL	813	175	226	379	633	989	4.6	3.8	1.4	8.3
EE45T3HFISNL	921	232	289	462	750	1153	3.3	2.6	1.3	8.6
EE75T3HFISNL	1972	292	415	785	1401	2264	4.4	3.5	1.3	14.4
EE112T3HFISNL	3004	401	589	1152	2091	3405	5.2	4.5	1.7	12.7
EE150T3HFISNL	2584	524	686	1170	1978	3109	3.4	2.9	1.7	18.1
EE225T3HFISNL	3375	831	1042	1675	2729	4206	4.4	4.1	2.7	11.8
EE300T3HFISNL	3521	1006	1226	1886	2987	4527	4.8	4.7	4.0	10.7
EE500T68HFISNL	6909	1499	1931	3226	7113	8408	4.2	4.0	2.9	10.3
80 °C Rise										
EE15T3HBISNL	449	107	135	220	360	556	3.8	2.3	0.8	10.7
EE30T3HBISNL	664	171	212	337	544	835	3.4	2.5	1.1	9.5
EE45T3HBISNL	689	258	301	430	646	947	3.0	2.6	1.7	9.5
EE75T3HBISNL	1691	353	459	776	1304	2044	3.6	2.8	1.2	11.7
EE112T3HBISNL	1850	482	598	945	1523	2332	4.7	4.4	2.7	9.0
EE150T3HBISNL	2333	524	670	1108	1837	2857	3.3	2.9	1.9	17.3
EE225T3HBISNL	3006	831	1019	1583	2522	3837	4.3	4.1	3.1	11.8
EE300T68HBISNL	2830	1101	1278	1809	2693	3931	3.9	3.8	4.0	12.0

© 2007–2009 Schneider Electric All Rights Reserved

Table 12: Ventilated Energy Efficient K13 Rated Transformer; 480 Delta Primary to 208Y/120 Secondary; Aluminum Wound

	Losses in Watts						IZ Related Data			
Catalog Number	**Coil Loss (load loss)**	**Core Loss (no load)**	**25% Load**	**50% Load**	**75% Load**	**100% Load**	**%IZ**	**%IX**	**X/R**	**Inrush x Rated Primary Current**
150 °C Rise										
EE15T3HISNLP	546	107	141	244	414	653	4.3	2.3	0.6	10.7
EE30T3HISNLP	892	175	231	399	677	1068	4.8	3.8	1.3	8.3
EE45T3HISNLP	1442	221	311	581	1032	1663	4.7	3.4	1.1	8.6
EE75T3HISNLP	2164	292	427	833	1509	2456	4.5	3.5	1.2	14.4
EE112T3HISNLP	2275	482	624	1051	1761	2757	4.81	4.36	2.16	9.0
EE150T3HISNLP	2817	549	725	1253	2134	3366	3.5	2.9	1.5	17.0
EE225T3HISNLP	6584	831	1243	2477	4535	7415	6.2	5.5	1.9	11.8
EE300T3HISNLP	3521	1006	1226	1886	2987	4527	4.8	4.7	4.0	10.7
EE500T68HISNLP	7620	1499	1975	3404	7690	9119	4.2	4.0	2.6	10.3
115 °C Rise										
EE15T3HFISNLP	497	107	138	232	387	605	4.0	2.3	0.7	10.7
EE30T3HFISNLP	813	175	226	379	633	989	4.6	3.8	1.4	8.3
EE45T3HFISNLP	921	232	289	462	750	1153	3.3	2.6	1.3	17.5
EE75T3HFISNLP	1356	379	464	718	1142	1735	3.3	2.8	1.5	11.7
EE112T3HFISNLP	2062	482	611	998	1642	2544	4.7	4.4	2.4	9.0
EE150T3HFISNLP	2568	549	709	1191	1993	3117	3.4	2.9	1.7	18.1
EE225T3HFISNLP	3370	832	1043	1675	2728	4202	4.4	4.1	2.7	11.8
EE300T68HFISNLP	5868	1101	1468	2568	4402	6969	4.4	3.9	2.0	12.0
EE500T68HFISNLP	11577	1562	2286	4456	10968	13139	5.0	4.5	1.9	8.1
EE750T68HFISNLP	13219	2012	2838	5316	12752	15231	5.5	5.2	3.0	9.3
80 °C Rise										
EE15T3HBISNLP	479	100	130	220	369	579	4.2	2.8	0.9	9.1
EE30T3HBISNLP	554	185	220	323	497	739	3.7	3.2	1.7	11.5
EE45T3HBISNLP	1116	265	335	544	893	1381	4.1	3.3	1.3	10.0
EE75T3HBISNLP	1384	385	472	731	1163	1769	3.6	3.1	1.7	15.6
EE112T3HBISNLP	1194	479	554	778	1151	1673	4.3	4.2	3.9	13.7
EE150T3HBISNLP	1225	679	756	986	1368	1904	4.2	4.1	5.0	15.6
EE225T3HBISNLP	3147	804	1001	1591	2574	3951	4.0	3.8	2.7	14.5
EE300T68HBISNLP	2830	1101	1278	1809	2693	3931	3.9	3.8	4.0	12.0

© 2007–2009 Schneider Electric All Rights Reserved

Table 13: Ventilated Energy Efficient K4 Rated Transformer; 480 Delta Primary to 208Y/120 Secondary; Copper Wound

	Losses in Watts						IZ Related Data			
Catalog Number	**Coil Loss (load loss)**	**Core Loss (no load)**	**25% Load**	**50% Load**	**75% Load**	**100% Load**	**%IZ**	**%IX**	**X/R**	**Inrush x Rated Primary Current**
150 °C Rise										
EE15T3HISCUNL	555	73	108	212	385	628	5.0	3.4	0.9	5.5
EE30T3HISCUNL	697	146	190	320	538	843	3.5	2.6	1.1	11.4
EE45T3HISCUNL	1522	221	316	601	1077	1743	4.3	2.7	0.8	11.8
EE75T3HISCUNL	2425	290	442	897	1655	2716	4.4	3.0	0.9	10.8
EE112T3HISCUNL	2806	394	569	1096	1972	3200	4.2	3.4	1.4	12.7
EE150T3HISCUNL	3369	509	719	1351	2404	3878	4.8	4.2	1.9	12.3
EE225T3HISCUNL	3895	546	789	1520	2737	4441	5.3	5.0	2.9	6.6
EE300T68HISCUNL	5041	927	1242	2187	3763	5968	4.7	4.4	2.6	14.2
EE500T68HISCUNL	5526	1500	1845	2882	5990	7026	4.5	4.3	3.9	10.3
115 °C Rise										
EE15T3HFISCUNL	520	90	123	220	383	610	4.7	3.2	0.9	9.1
EE30T3HFISCUNL	637	146	186	305	504	783	3.4	2.6	1.2	11.4
EE45T3HFISCUNL	1654	199	302	612	1129	1853	5.2	3.7	1.0	13.7
EE75T3HFISCUNL	2818	251	427	956	1836	3069	6.5	5.3	1.4	10.7
EE112T3HFISCUNL	2252	433	574	996	1700	2685	3.8	3.2	1.6	17.8
EE150T3HFISCUNL	2157	563	698	1102	1776	2720	4.6	4.2	2.2	10.6
EE225T3HFISCUNL	2800	833	1008	1533	2408	3632	3.6	3.4	2.7	12.6
EE300T68HFISCUNL	5496	871	1215	2245	3963	6367	4.7	4.4	2.4	11.0
EE500T68HFISCUNL	4618	1440	1729	2595	5192	6058	5.0	4.9	5.3	8.3
80 °C Rise										
EE15T3HBISCUNL	468	90	119	207	353	558	4.5	3.2	1.0	9.1
EE30T3HBISCUNL	626	185	224	341	537	811	3.6	2.9	1.4	11.4
EE45T3HBISCUNL	888	258	313	480	757	1146	3.0	2.3	1.2	12.5
EE75T3HBISCUNL	2536	251	410	885	1677	2787	6.3	5.3	1.6	10.7
EE112T3HBISCUNL	1250	398	476	710	1101	1648	4.2	4.1	3.7	10.5
EE150T3HBISCUNL	2638	563	728	1223	2047	3201	4.6	4.2	2.4	13.4
EE225T3HBISCUNL	2209	774	912	1326	2017	2983	4.6	4.5	4.6	11.8
EE500T68HBISCUNL	8224	1439	1953	3495	6065	9663	5.5	5.3	3.2	10.6

© 2007–2009 Schneider Electric All Rights Reserved

Table 14: Ventilated Energy Efficient K13 Rated Transformer; 480 Delta Primary to 208Y/120 Secondary; Copper Wound

	Losses in Watts						IZ Related Data			
Catalog Number	**Coil Loss (load loss)**	**Core Loss (no load)**	**25% Load**	**50% Load**	**75% Load**	**100% Load**	**%IZ**	**%IX**	**X/R**	**Inrush x Rated Primary Current**
150 °C Rise										
EE15T3HISCUNLP	506	100	132	227	385	606	4.0	2.2	0.7	11.3
EE30T3HISCUNLP	697	146	190	320	538	843	3.5	2.6	1.1	11.4
EE45T3HISCUNLP	1811	199	312	652	1217	2009	5.5	3.7	0.9	13.7
EE75T3HISCUNLP	2750	251	423	939	1798	3001	6.5	5.3	1.5	10.7
EE112T3HISCUNLP	2443	433	586	1044	1808	2877	3.8	3.2	1.5	14.1
EE150T3HISCUNLP	2362	563	711	1154	1892	2925	4.5	4.2	2.7	13.4
EE225T3HISCUNLP	3065	833	1024	1599	2557	3898	3.7	3.4	2.5	12.6
EE300T68HISCUNLP	5041	927	1242	2187	3763	5968	4.7	4.4	2.6	9.9
EE500T68HISCUNLP	6816	1367	1793	3071	6905	8183	4.8	4.6	3.4	9.8
115 °C Rise										
EE15T3HFISCUNLP	460	100	129	215	359	560	3.8	2.2	0.7	11.3
EE30T3HFISCUNLP	637	146	186	305	504	783	3.4	2.6	1.2	11.4
EE45T3HFISCUNLP	1113	198	268	476	824	1311	4.5	3.8	1.5	13.7
EE75T3HFISCUNLP	2729	230	401	912	1765	2959	6.5	5.3	1.5	10.5
EE112T3HFISCUNLP	2232	433	573	991	1689	2665	3.7	3.2	1.6	14.1
EE150T3HFISCUNLP	2157	563	698	1103	1777	2721	4.4	4.2	2.9	13.4
EE225T3HFISCUNLP	2800	833	1008	1533	2408	3632	3.6	3.4	2.7	12.6
EE300T68HFISCUNLP	3900	1038	1282	2013	3232	4938	3.5	3.3	2.5	12.3
EE500T68HFISCUNLP	8224	1439	1953	3495	8121	9663	5.5	5.3	3.2	10.6
EE750T68HFISCUNLP	11159	1562	2260	4352	10629	12722	6.0	5.8	3.9	7.8
80 °C Rise										
EE15T3HBISCUNLP	481	96	126	216	367	577	3.8	2.1	0.7	11.0
EE30T3HBISCUNLP	554	185	220	323	497	739	3.7	3.2	1.7	11.5
EE45T3HBISCUNLP	867	241	295	458	729	1108	3.6	3.0	1.6	11.5
EE75T3HBISCUNLP	972	385	446	628	932	1357	3.4	3.1	2.4	15.6
EE112T3HBISCUNLP	1194	479	554	778	1151	1673	4.3	4.2	3.9	13.7
EE150T3HBISCUNLP	1225	679	756	986	1368	1904	4.2	4.1	5.0	15.6
EE225T3HBISCUNLP	2209	774	912	1326	2017	2983	4.6	4.5	4.6	11.8
EE300T68HBISCUNLP	3696	1038	1269	1962	3117	4734	3.3	3.1	2.5	12.3
EE500T68HBISCUNLP	3177	1708	1907	2502	4289	4885	3.1	3.1	4.8	12.9

© 2007–2009 Schneider Electric All Rights Reserved

Glossary of Terms

Impedance

Definition

Impedance, usually designated as %IZ, is a way of expressing the amount of current-limiting effect the transformer will represent if the load side of the transformer short-circuits. Considered along with the X/R ratio, the information is used for systems analysis to determine proper interrupting ratings and coordination of protective devices.

Use of Impedance to Determine Interrupting Capacity

Knowing the maximum current available on the load side of a transformer is necessary to properly choose current interrupting values for disconnects and overcurrent protective devices. Here is a simple method of estimating short circuit current:

$$\text{Secondary short circuit current} = \frac{\text{Transformer secondary full load rating}}{\text{Transformer impedance}}$$

Example

For a transformer with 208 A full load current and 5% impedance:

$$\text{Secondary short circuit current} = \frac{208}{.05} = 4160 \text{ A}$$

Others factors besides impedance affect short circuit current. Primary system capacity and motor current contribution from the load side will change the short circuit value obtained using the above simplified method. Make sure to take all factors into account to ensure that device interrupting ratings are properly coordinated. Contact your local Schneider Electric representative for information on system analysis service.

High Inrush Loads

Overview

Many loads served by transformers can momentarily draw high peak currents when power is applied to them. Transformers, of course, are one of these. Others include motors, relays, contactors, and certain electronic devices.

Other types of loads can draw repeated high current surges during their normal operation. These include DC drives, electronic phase control, welders, X-ray equipment, and many kinds of cyclic process equipment.

Often the transformer is called upon to supply momentary currents far in excess of the nameplate full load rating. One concern when supplying these loads is the supply transformer's ability to withstand the current both mechanically and thermally. Another is the voltage drop (regulation) on the transformer secondary caused by these high current demands.

Thermal Effects

For loads that have a high inrush on energizing, and where such high current loads occur infrequently, the thermal affects on the supply transformer can typically be ignored. For repetitive overloads, however, it may be necessary to calculate the thermal effect on insulation life expectancy. A good guide for such calculation is ANSI/IEEE C57.96 "IEEE Guide for Loading Dry-Type Distribution and Power Transformers."

Mechanical Effects

Low voltage transformers are designed mechanically to withstand full, bolted fault conditions on the secondary for 1–2 seconds. So, since the load could never exceed the current achieved by a bolted fault, and since typical inrush only lasts for a fraction of a second, mechanical concerns are not generally an issue in low voltage transformers.

© 2007–2009 Schneider Electric All Rights Reserved

Regulation Effects

The majority of electrical equipment is designed to function with an input voltage variation of +/- 10%. If we assume the customer has at least nominal voltage to begin with, we can allow a voltage drop maximum of 10% on the transformer secondary during peak current conditions. Under those conditions, we can be reasonably confident these currents will not cause malfunction of other equipment on the load side because of low voltage conditions. Calculation of regulation on a transformer is complex, requiring information about load power factor as well as amperage. Since complete information is often lacking, a worse case calculation, as shown below, is often used to provide conservative results:

$$\text{Voltage drop (\%)} = \frac{\text{Maximum load current}}{\text{Transformer secondary full load rating}} \times \text{Impedance (\%)}$$

Simply choose a transformer of sufficient full load capacity to result in a voltage drop of less than 10%. The transformer impedance can be obtained either from the nameplate or from Schneider Electric engineering. Industrial control transformer literature typically includes regulation charts that relate peak load VA and power factor to voltage drop, so that approximation calculations such as shown above are not necessary.

Typical Customer Issue Relating To This Topic

A contracting firm is ordering a 300 kVA 480 Delta – 240 Delta transformer, which has a 721 A nameplate full load current capacity on the secondary and 5.1% impedance. They want to use it to directly supply a 200 hp motor with 2700 A locked rotor current.

Explanation and Solution

Applying our voltage drop estimating formula:

$$\text{Voltage drop (\%)} = \frac{2700}{721} \times 5.1 = 19\%$$

Since the result exceeds 10%, this transformer's capacity is too low, or its impedance too high for this application.

There are two solutions:

1. Choose a larger transformer (in this case, a 500 kVA with no more than 4.4% impedance, or a 750 kVA with no more than 6.6% impedance).
2. Purchase a reduced voltage starter, or a soft start unit, to reduce the motor locked rotor current to near full load motor rating. These devices eliminate the need for transformer over-sizing.

© 2007–2009 Schneider Electric All Rights Reserved

Transformer Loss

Core Loss (No-load Loss)

When a transformer is energized on the primary side, the laminated steel core carries a magnetic field or flux. This magnetic field causes certain losses in the core, generating heat and dissipating real power from the primary source, even when no load is on the secondary side of the transformer.

For a given level of magnetic flux, various core steel materials have a constant Watts/pound characteristic. So, at a given flux level, the more pounds of a specific core lamination used in a design, the higher the losses.

Core loss (sometimes referred to as a no-load loss) can be a major concern in the total operating cost of a transformer, particularly over very light loading, where it becomes the predominant energy cost associated with the operation of the transformer. A transformer designer can reduce the core loss in a a transformer either by using a better grade of magnetic steel material or by reducing the level of magnetic field in the core. Core loss in Watts is available for all Schneider Electric low voltage transformers, and is required by NEMA ST20 to be reported on all electrical test reports.

Coil Loss (Load Loss)

Under load, a transformer loses energy in the form of heat within the winding conductors. That's because these conductors have a certain amount of resistance. Nearly all of the coil loss can be accounted for by the simple I^2R (current in A^2 x resistance in ohms) formula for Watts. There is a small amount of what are called "stray losses," and the sum of these and I^2R Watts equals total coil loss. These losses raise the temperature of the coils in a transformer to a variable degree, depending on loading. Conductor loss in Watts is available for all Schneider Electric low voltage transformers, and is required by NEMA ST20 to be reported on all electrical test reports.

Since the losses vary approximately with the square of load current, they accelerate rather rapidly as full load is approached, and can become the most significant loss in a transformer.

Coils are typically wound with either aluminum or copper conductors. Assuming that transformers are designed economically for a given maximum temperature rise, both materials have the same approximate loss. That's because, even though copper is a better conductor that aluminum, designers use smaller conductor sizes in copper windings to reduce material cost.

As stated earlier, coil losses vary approximately with the square of load current. So a transformer operating at half of its rated load can be expected to have approximately 25% of its reported full load coil loss. Since the resistance of conductors reduces as temperature goes down, the reduced load loss will actually be somewhat less than that calculated with this method:

Coil Loss at particular load

Full Load Loss x (percent load)^2

The sum of core loss and coil loss equals the total loss of a transformer for a given load. The core loss remains constant for a given applied voltage, and the coil loss is variable with load. These losses are typically reported by engineering in Watts. Many contractors interested in air conditioning requirements of a building will request the BTU/HR (British Thermal Units per hour) equivalent, which can be determined as follows:

BTU/HR = 3.414 x Losses in Watts

© 2007–2009 Schneider Electric All Rights Reserved

Efficiency

Overview

Transformer efficiency can be defined as the percentage of power out compared to the power in. A perfect, zero loss transformer would have the same power in as out and would be 100% efficient. Modern transformers are amazingly efficient, with some larger transformers exceeding 99% in efficiency. However, no transformer is without some loss in both the core steel and the conductors within the coils. Percent full load efficiency is typically calculated by:

$$\% \text{ Efficiency} = \frac{100 \times VA}{VA + \text{Core Loss} + \text{Coil Loss}}$$

Example: A 75 kVA (75000 VA) transformer has a core loss of 467 Watts and a coil loss of 2491 Watts. What is the full load efficiency?

$$\% \text{ Efficiency} = \frac{100 \times 75000}{75000 + 467 + 2491} = 96.21\%$$

Conventional reporting in transformer test data records consists of efficiencies at 25%, 50%, 75%, and 100% load points. In order to calculate reduced load efficiencies, the formula needs to be modified as shown:

$$\% \text{ Efficiency} = \frac{100 \times P \times VA}{(P \times VA) + \text{Core Loss} + (P^2 \times \text{Coil Loss})}$$

Where:

P = Per unit load

Example: What is the efficiency at 50% load for the same 75 kVA transformer in the previous example?

$$\% \text{ Efficiency@ 50\% Load} = \frac{100 \times 0.5 \times 75000}{(0.5 \times 75000) + 467 + (0.25 \times 2491)} = 97.17\%$$

The complete efficiency report for the example transformer would look like this:

Efficiency @100% load = 96.21%
@ 75% load = 96.79%
@ 50% load = 97.17%
@ 25% load = 96.79%

Transformers reach their highest efficiency at a load point that results in coil loss equaling core loss. In the example transformer, this would be at about 43% load, where the efficiency would be 97.20%. The peak efficiency point will vary depending on the relationship between core loss and conductor loss.

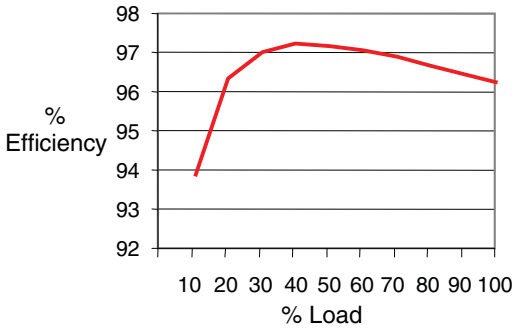

© 2007–2009 Schneider Electric All Rights Reserved

Typical Customer Issue Relating to This Topic

A facility engineer has compiled complete loading profile information for a proposed service, and wishes to purchase a transformer that will present the lowest energy costs over the life of the transformer.

Explanation and Solution

Given the daily, 24-hour average load on the transformer, Schneider Electric engineering can design transformers with the most economical first cost, as well as optimize the efficiency at a point which provides the owner with maximum long term energy savings.

Detail

The typical test reporting of efficiency in transformers may neglect the influence of temperature changes in the coils as load is varied. This omission always results in conservative efficiency numbers, and the results are satisfactory for most general use, such as estimating air conditioning, room ventilation, etc. However, it's recognized that more exact values may be needed in cases such as calculating ownership costs.

NEMA Standard TP1 addresses the necessary corrections in temperature reference for specific daily average loading. It recognizes that copper and aluminum conductors change resistance at different rates with temperature, so that correction factors change with winding material. An example calculation shows a specific instance assuming 35% average loading on a 150 °C rise transformer.

$$\% \text{ Efficiency} = \frac{100 \times P \times VA}{(P \times VA) + \text{Core Loss} + (P^2 \times \text{Coil Loss} \times T)}$$

Where:

P = Per unit load

T = 0.8152 for aluminum
0.8193 for copper

For further details on temperature correction for accurate efficiency data, refer to NEMA Standard TP1.

© 2007–2009 Schneider Electric All Rights Reserved

Schneider Electric
1010 Airpark Center Drive
Nashville, TN 37217 USA
1-888-SquareD (1-888-778-2733)
www.schneider-electric.us

Electrical equipment should be installed, operated, serviced, and maintained only by qualified personnel. No responsibility is assumed by Schneider Electric for any consequences arising out of the use of this material.

© 2007–2009 Schneider Electric All Rights Reserved

Square D 15 kVA 480 - 208Y/120 3PH Transformer 15T3H 15kVA 208 Y

32749-17212-022 (PM0400-0)

Square D || Sorgel

Catalog No. 15T3H - 32749-17212-022
Three Phase Insulated Dry Type Transformer
15kVA - 480 to 208 WYE / 120 Volts - 3 Phase

Similar to one in use - one is use model 15T3H has been discontinued

Product data sheet
Characteristics

EE15T3H
Transformer Dry Type 15kVA 480D208Y120

Product availability : Stock - Normally stocked in distribution facility

Price* : 3941.00 USD

Main

Product or component type	Energy Efficient Transformer
Box number	17D
NEMA degree of protection	NEMA 2
Insulation temperature	428 °F (220 °C)
Phase	3 phases
Primary voltage	480 V delta
Rated power in VA	15 kVA
Secondary voltage	208Y/120 V
Number of tap-offs	6 2.5 % 2+ 4-
Temperature rise	150 °C
Material	Aluminium

Ordering and shipping details

Category	16285 - 3 PH EE/TP1 15-75 KVA LVGP XFMR
Discount Schedule	PE2E
GTIN	00785901429142
Nbr. of units in pkg.	1
Package weight(Lbs)	245.00
Returnability	Y
Country of origin	MX

Offer Sustainability

Sustainable offer status	Green Premium product
RoHS (date code: YYWW)	Compliant - since 1347 - Schneider Electric declaration of conformity Schneider Electric declaration of conformity
REACh	Reference not containing SVHC above the threshold

Disclaimer: This documentation is not intended as a substitute for and is not to be used for determining suitability or reliability of these products for specific user applications

Reference not containing SVHC above the threshold

Product environmental profile	Available
Product end of life instructions	Need no specific recycling operations

Contractual warranty

Warranty period	18 months

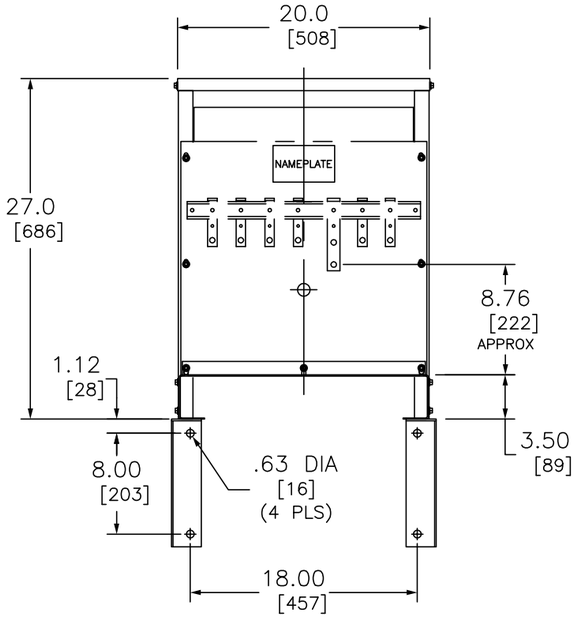

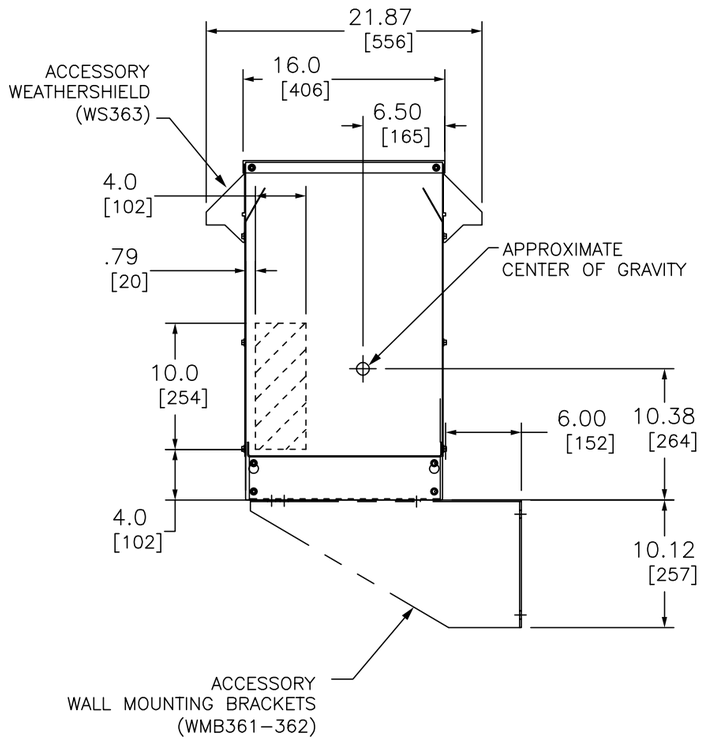

Similar to one in use - one is use model 15T3H has been discontinued

IN EACH PHASE CONNECT TO TAPS	
PRIMARY VOLTS	2–2.5% FCAN 4–2.5% FCBN
504	1
492	2
480	3
468	4
456	5
444	6
432	7

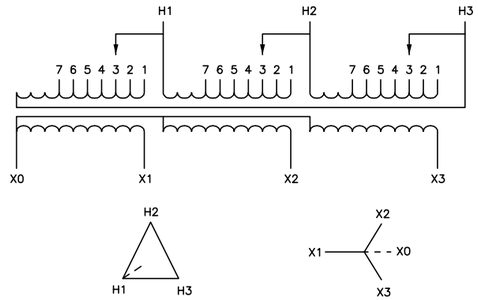

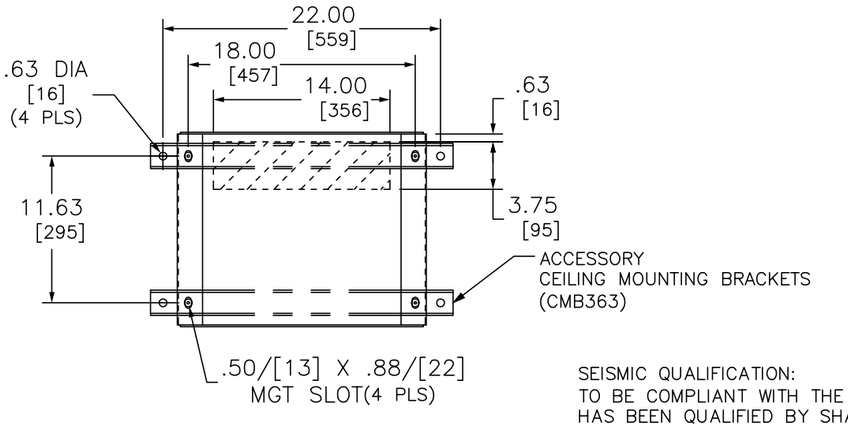

TRANSFORMER SPECIFICATIONS:

15 KVA 3Ø 60 HZ
PRIMARY VOLTAGE 480 DELTA
SECONDARY VOLTAGE 208Y/120
150°C RISE ABOVE 40°C AMBIENT
220°C INSULATION SYSTEM
ALUMINUM WINDINGS
APPROXIMATE WEIGHT: 220 LBS
GUARANTEED SOUND LEVEL: 45 dB
EFFICIENCY @35%: 97.0% AVG. CONFORMS TO NEMA TP 1 – 2002 AND CSA C802.2

SEISMIC QUALIFICATION:
TO BE COMPLIANT WITH THE SEISMIC REQUIREMENTS OF ASCE/SEI 7, THIS UNIT HAS BEEN QUALIFIED BY SHAKE TABLE TESTING THROUGH SELF CERTIFICATION TO ICC ES AC156. CONTACT YOUR LOCAL SCHNEIDER ELECTRIC/SQUARE D REPRESENTATIVE FOR RELATED QUESTIONS.

NOTES:
1) cULus LISTED (MEETING UL 1561 AND CSA C22.2)
2) NEMA 2 VENTILATED ENCLOSURE
   ENCLOSURE RATED FOR NEMA 3R WHEN OPTIONAL WEATHERSHIELD ACCESSORY IS INSTALLED.
3) MINIMUM CLEARANCE OF 3.00[76] BETWEEN VENT OPENINGS, WALL OR OTHER OBSTRUCTION
4) SHADED AREAS DENOTE CUSTOMER CONDUIT ENTRANCE LOCATIONS, AVAILABLE BOTH SIDES AND BOTTOM

DUAL DIMENSIONS: INCHES
MILLIMETERS

LOW VOLTAGE ENERGY EFFICIENT, TP1
DRY–TYPE TRANSFORMER
CATALOG NO EE15T3H
3 PHASE, 15kVA, AL
PRIMARY 480 DELTA ,SECONDARY 208Y/120

SQUARE D
Schneider Electric

DWG# NO. 6312–0001

OCTOBER 2006

j:\vgpdwg\Customer Drawings\Online Approval Drawings\EE15T3H.DWG 11/14/2007 8:11:37 AM

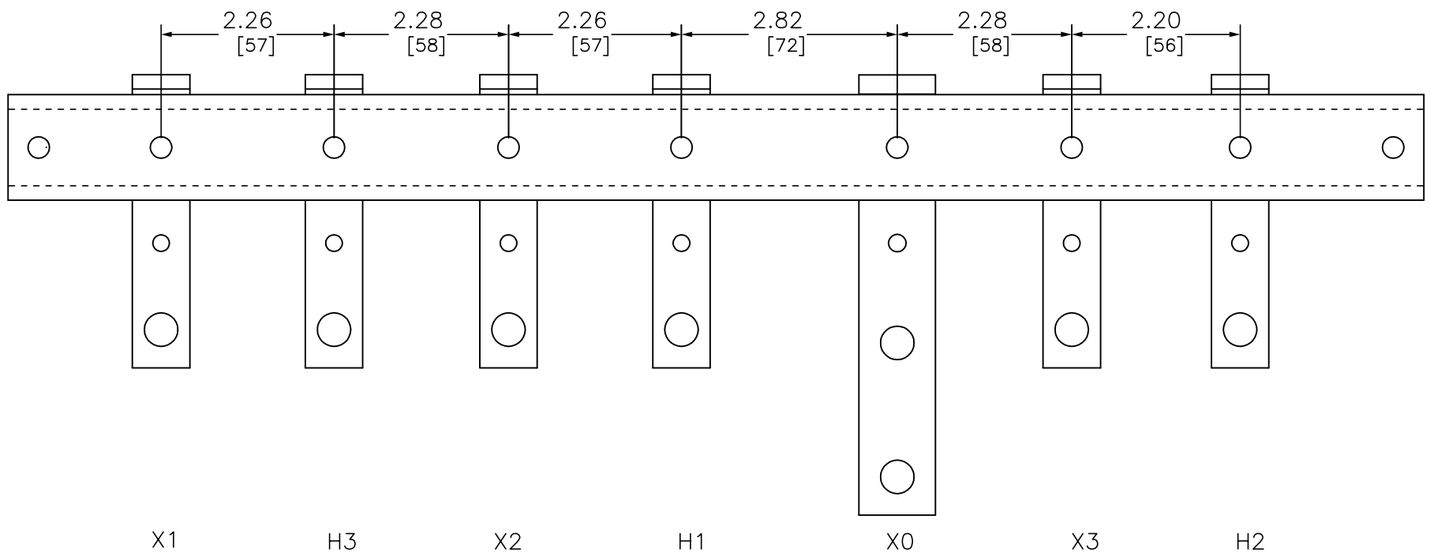

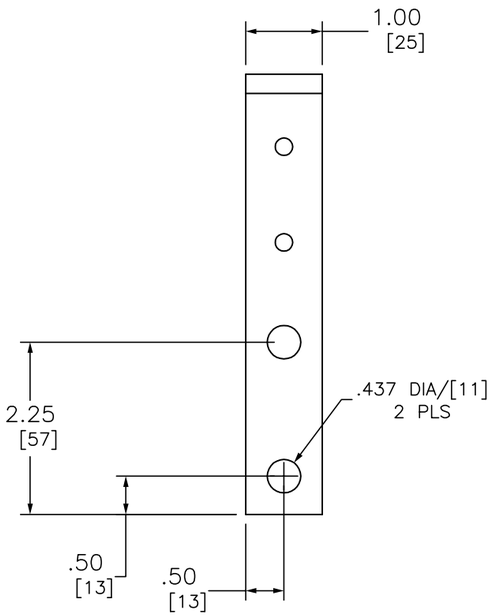

XO TERMINAL DETAIL

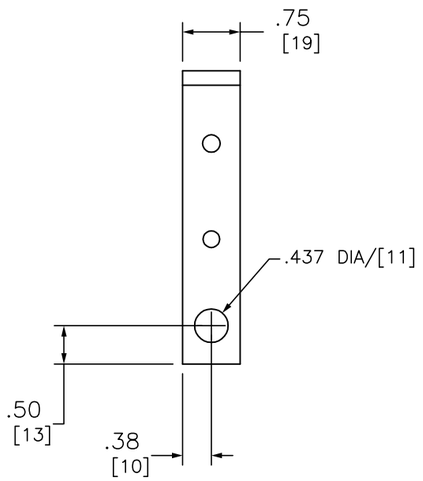

X TERMINAL DETAIL

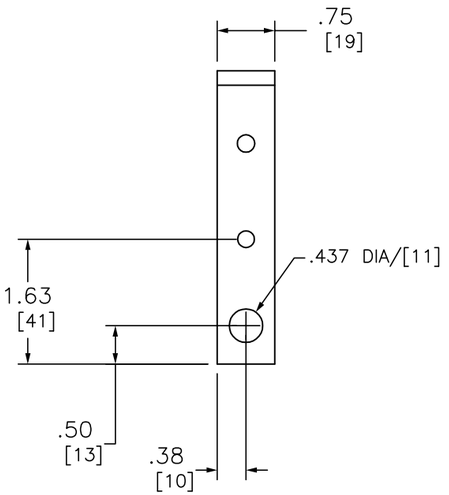

H TERMINAL DETAIL

Similar to one in use - one is use model 15T3H has been discontinued

DUAL DIMENSIONS: INCHES
MILLIMETERS

LOW VOLTAGE ENERGY EFFICIENT, TP1
DRY–TYPE TRANSFORMER
CATALOG NO EE15T3H
3 PHASE, 15kVA, AL
PRIMARY 480 DELTA ,SECONDARY 208Y/120

SQUARE D
Schneider Electric

DWG# NO. 6312–0001

TOTAL SYSTEMS DESIGN INC.

901 SOUTH BOLMAR STREET, SUITE N
WEST CHESTER, PA 19382
VOICE: 484-356-0288 FAX: 484-356-0293

TABLE OF CONTENTS

DWG. NO.	VER.	DESCRIPTION
2492Z0001	2	TITLE PAGE
2492A0001	2	MAIN CONTROL PANEL ENCLOSURE LAYOUT
2492E0001	2	MAIN CONTROL PANEL POWER DISTRIBUTION
2492E0002	2	MAIN CONTROL PANEL I/O WIRING
2492E0003	2	MAIN CONTROL PANEL I/O WIRING
2492E0004	2	MAIN CONTROL PANEL I/O WIRING

Get wireless
TNC-10T (
1-800-990-9025
952-882-7948
$5.00

NO.	DATE	VERSION	DRN BY	CHK'D	APP'D BY
1	4/19/04	INITIAL RELEASE	FS	WJS	WJS
2	05/17/04	AS BUILT	BB	WJS	WJS

TOTAL SYSTEMS DESIGN INC.
901 SOUTH BOLMAR STREET, SUITE N
WEST CHESTER, PA 19382
VOICE: 484-356-0288 FAX: 484-356-0293

ENVIRONMENTAL ALLIANCE, INC.
1812 NEWPORT GAP PIKE, WILMINGTON, DE
DEEP GROUNDWATER SYSTEM
MAIN CONTROL PANEL
TITLE PAGE

SCALE: NONE | ORG JOB: - | FILE/DWG No.: 2492Z0001

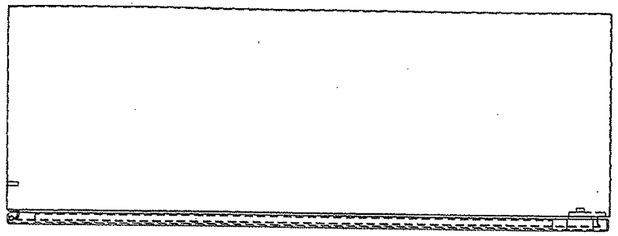

TOP VIEW

NAMEPLATES

ITEM #	QTY	DESCRIPTION	SIZE	COLOR
NP1	1	EXTRACTION WELL LEVEL	1" X 2-3/4"	B/W/B
NP2	2	BAG FILTER PRESSURE	1" X 2-3/4"	B/W/B
NP3	2	CARBON VESSEL PRESSURE	1" X 2-3/4"	B/W/B
NP4	1	SUBSTRATE SOLUTION TANK LEVEL	1" X 2-3/4"	B/W/B
NP5	1	PROCESS TANK LEVEL	1" X 2-3/4"	B/W/B
NP6	2	INJECTION LINE PRESSURE	1" X 2-3/4"	B/W/B
NP7	1	EXTRACTION WELL PUMP	1" X 2-3/4"	B/W/B
NP8	1	SUBSTRATE SOLUTION FEED PUMP	1" X 2-3/4"	B/W/B
NP9	1	SUBSTRATE SOLUTION TANK MIXER	1" X 2-3/4"	B/W/B
NP10	1	SINGLE SPEED TRANSFER PUMP	1" X 2-3/4"	B/W/B

NAMEPLATES

ITEM #	QTY	DESCRIPTION	SIZE	COLOR
NP11	1	VARIABLE SPEED TRANSFER PUMP	1" X 2-3/4"	B/W/B
NP12	1	PROCESS TANK RECIRC VALVE	1" X 2-3/4"	B/W/B
NP13	1	INJECTION WELL IW-701 ISOLATION VALVE	1" X 2-3/4"	B/W/B
NP14	1	INJECTION WELL IW-702 ISOLATION VALVE	1" X 2-3/4"	B/W/B
NP15	1	INJECTION WELL IW-703 ISOLATION VALVE	1" X 2-3/4"	B/W/B
NP16	1	INJECTION WELL IW-704 ISOLATION VALVE	1" X 2-3/4"	B/W/B
NP17	1	INJECTION WELL IW-705 ISOLATION VALVE	1" X 2-3/4"	B/W/B
NP18	1	INJECTION WELL IW-706 ISOLATION VALVE	1" X 2-3/4"	B/W/B

NOTE- TEXT ON NAMEPLATES TO BE 1/8" HIGH

BILL OF MATERIALS

ITEM	QTY	MANUFACTURER	DESCRIPTION	PART NUMBER
1	1	HOFFMAN	ENCLOSURE	C-SD483612
2	1	HOFFMAN	SUBPANEL	C-P4836
3	1	ALLEN BRADLEY	THREE PHASE DISCONNECT W/HANDLE	194R-NN060P34ER1
4	1	ALLEN BRADLEY	IEC CONTACTOR FOR 10 HP MOTOR 460 VAC	100-C16D10
5	1	ALLEN BRADLEY	OVERLOAD RELAY FOR 10 HP MOTOR	193-EA5GB
6	2	ALLEN BRADLEY	IEC CONTACTOR 120 VAC COIL	100C-09D10
7	2	ALLEN BRADLEY	RELAY BASE	700HN101
8	2	ALLEN BRADLEY	RELAY 120 VAC COIL 10A CONTACTS	700-HA33A1
9	12	ALLEN BRADLEY	SELECTOR SWITCHES	800T-J2B
10	12	ALLEN BRADLEY	HOA LEGEND PLATE	800T-X511
11	9	ALLEN BRADLEY	RED LIGHT 120VAC	800T-QH10R
12	12	ALLEN BRADLEY	GREEN LIGHT 120VAC	800T-QH10G
13	5	ALLEN BRADLEY	RUN LEGEND PLATE	800T-X540
14	7	ALLEN BRADLEY	OPEN LEGEND PLATE	800T-X531
15	4	ALLEN BRADLEY	HIGH LEGEND PLATE	800T-512
16	5	ALLEN BRADLEY	LOW LEGEND PLATE	800T-X524
17	1	ALLEN BRADLEY	MOUNTING RAIL	199-DR1
18	1	ALLEN BRADLEY	MOUNTING RAIL, 3" HIGH	1492-DR6
19	4	ALLEN BRADLEY	END ANCHORS	1492-EA35
20	21	ALLEN BRADLEY	SINGLE TERMINAL BLOCK	1492-W4
21	2	ALLEN BRADLEY	SINGLE TERM END BARRIER	1492-EB3
22	90	ALLEN BRADLEY	DOUBLE TERMINAL BLOCK	1492-WD4
23	3	ALLEN BRADLEY	DOUBLE TERM END BARRIER	1492-EBD3
24	22	ALLEN BRADLEY	TRIPLE TERMINAL BLOCK	1492-WTF3
25	1	ALLEN BRADLEY	TRIPLE TERM END BARRIER	1492-EBTF3
26	4	ALLEN BRADLEY	FUSED TERM BLOCK, 12amp	1492-H6
27	1	ALLEN BRADLEY	FUSED TERM BLOCK END BARRIER	1492-N37
28	1	EOS PROCONTROL	TYPE A2 24DI 16AI 3000 8AO W/TRANSF	S2PA2
29	1	EOS PROCONTROL	RS485 NETWORKING	NETKIT
30	1	EOS PROCONTROL	TYPE B1 12DI 8AI 14DO W/TRANSF	S2B1
31	1	EOS PROCONTROL	EXTENDED MEMORY	B-MEM
32	1	ACME	CONTROL TRANSFORMER 1.5 KVA	TA-2-81218-F3
33	1	BUSSMAN	FUSE BLOCK FOR 10 HP MOTOR	JT60030-3C
34	3	BUSSMAN	CLASS J FUSE 20 AMP	LPJ-20SP
35	2	BUSSMAN	CLASS CC FUSE 5 AMP	FNQ-R-5
36	1	BUSSMAN	FUSETRON FUSE 15 AMP	FNM1-5
37	2	BUSSMAN	FUSE 1 AMP	AGC-1
38	1	BUSSMAN	FUSE 8 AMP	AGC-8
39	1	BUSSMAN	FUSE 10 AMP	AGC-10
40	2	PANDUIT	WIREWAY 2 X 4 W/COVER	F2X4WH6/C2WH6
41	1	BURNDY	GROUND LUG	KA26U
42	1	ALLEN BRADLEY	PUSHBUTTON NO BLACK	800T-A2D1
43	1	ALLEN BRADLEY	RESET LEGEND PLATE	800T-X537
44	1	GET WIRELESS	800MHZ VOICE/FAX/DATA WIRELESS TERM	SX3E-AMP-WS
45	1	GET WIRELESS	800MHZ DB GAIN YAGI ANTENNA	1F01B002
46	1	GET WIRELESS	100' COAXIAL CABLE RUN	LMR-400
47	2	GET WIRELESS	TNC MALE CONNECTOR	TNC-10T

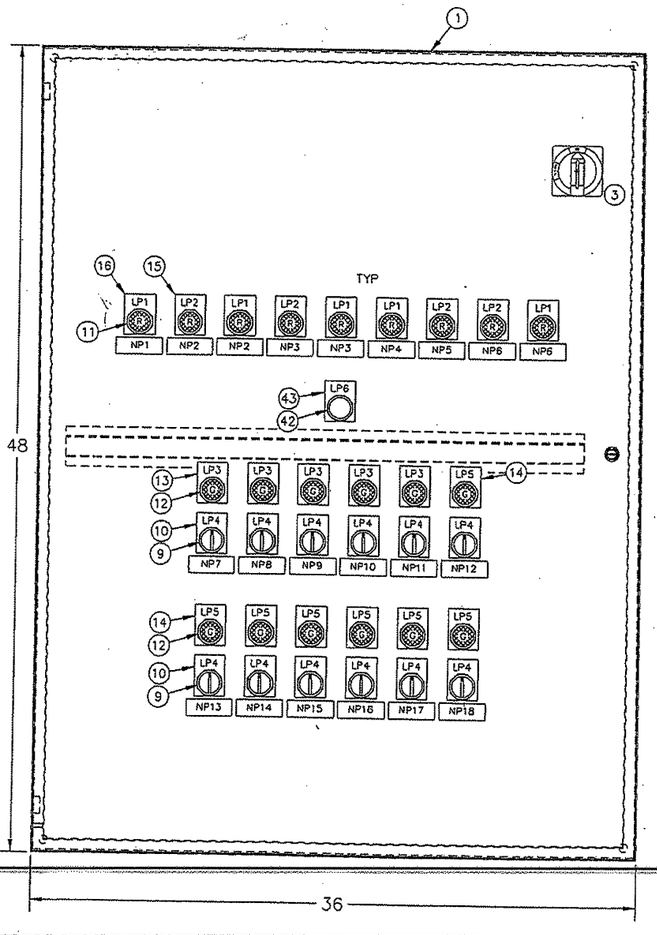

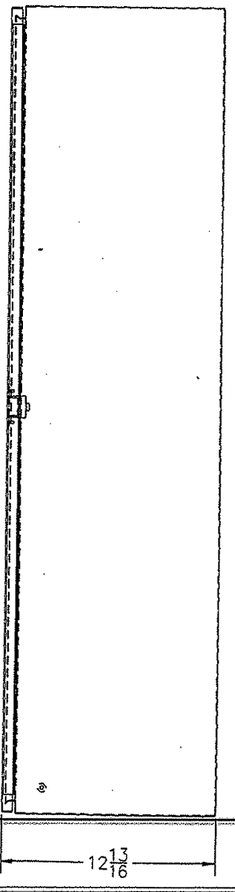

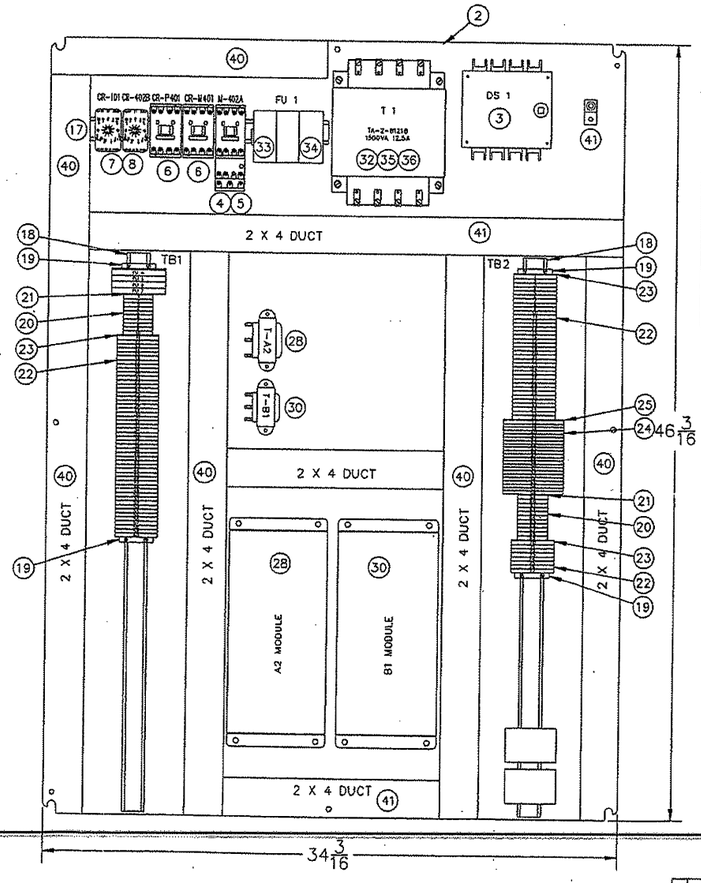

LEGEND PLATE SCHEDULE

ITEM #	QTY	ENGRAVING BY AB
LP1	5	LOW
LP2	4	HIGH
LP3	5	RUN
LP4	12	HAND-OFF-AUTO
LP5	7	OPEN
LP6	1	RESET

NO.	DATE	VERSION	DRAWN BY	DISP.	APPROVED BY
1	4/19/04	INITAL RELEASE	FS	WJS	WJS
2	06/17/04	AS BUILT	BB	WJS	WJS

TOTAL SYSTEMS DESIGN INC.
901 SOUTH BOLMAR STREET, SUITE N
WEST CHESTER, PA 19382
VOICE: 484-356-0288 FAX: 484-356-0293

ENVIRONMENTAL ALLIANCE, INC.
1812 NEWPORT GAP PIKE, WILMINGTON, DE
DEEP GROUNDWATER SYSTEM
MAIN CONTROL PANEL
ENCLOSURE LAYOUT

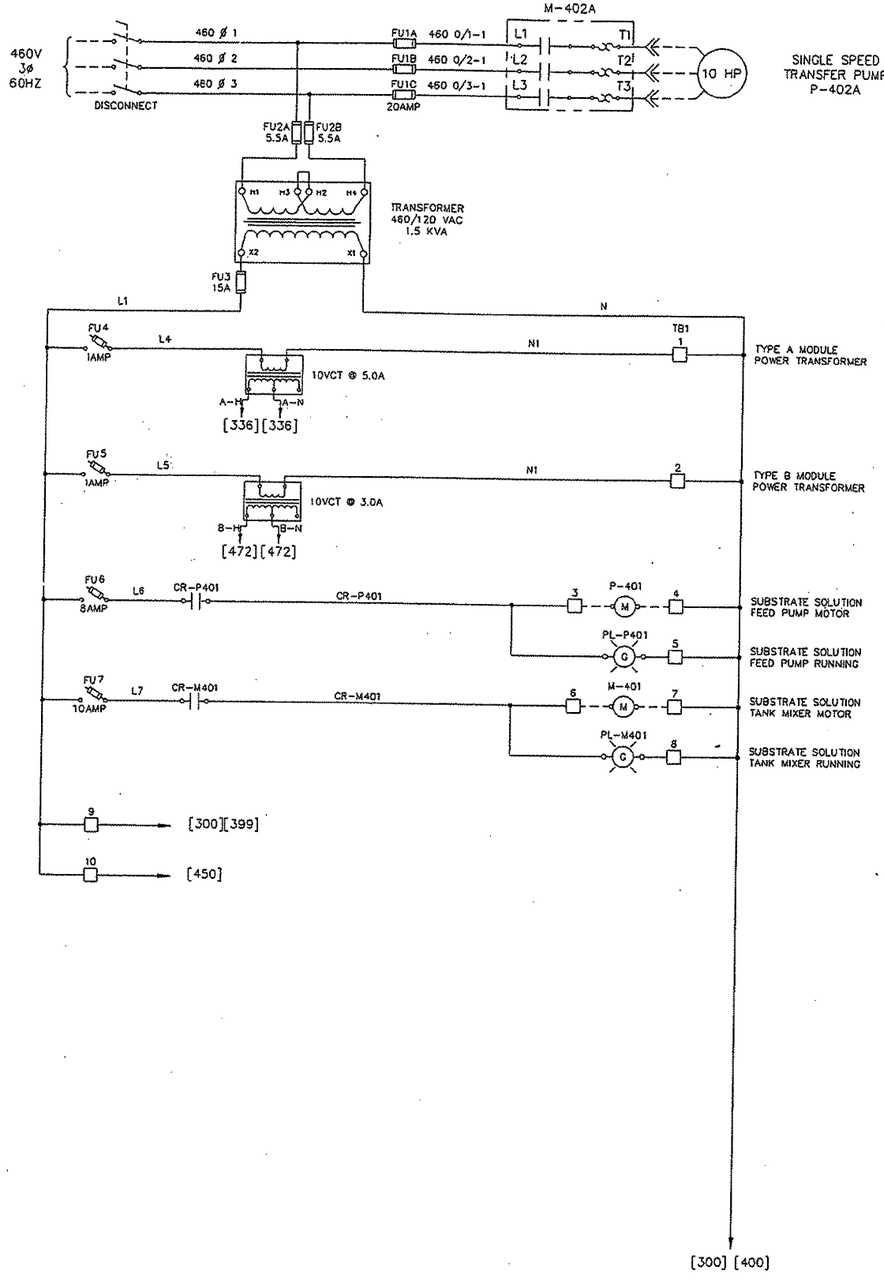

NO.	DATE	VERSION	DRAWN BY	CHCK.	APPROVED BY
1	4/19/04	INITIAL RELEASE	FS	WJS	WJS
2	06/17/04	AS BUILT	BB	WJS	

TOTAL SYSTEMS DESIGN INC.
901 SOUTH BOLMAR STREET, SUITE N
WEST CHESTER, PA 19382
VOICE: 484-356-0288 FAX: 484-356-0293

ENVIRONMENTAL ALLIANCE, INC.
1812 NEWPORT GAP PIKE, WILMINGTON, DE
DEEP GROUNDWATER SYSTEM
MAIN CONTROL PANEL
POWER DISTRIBUTION

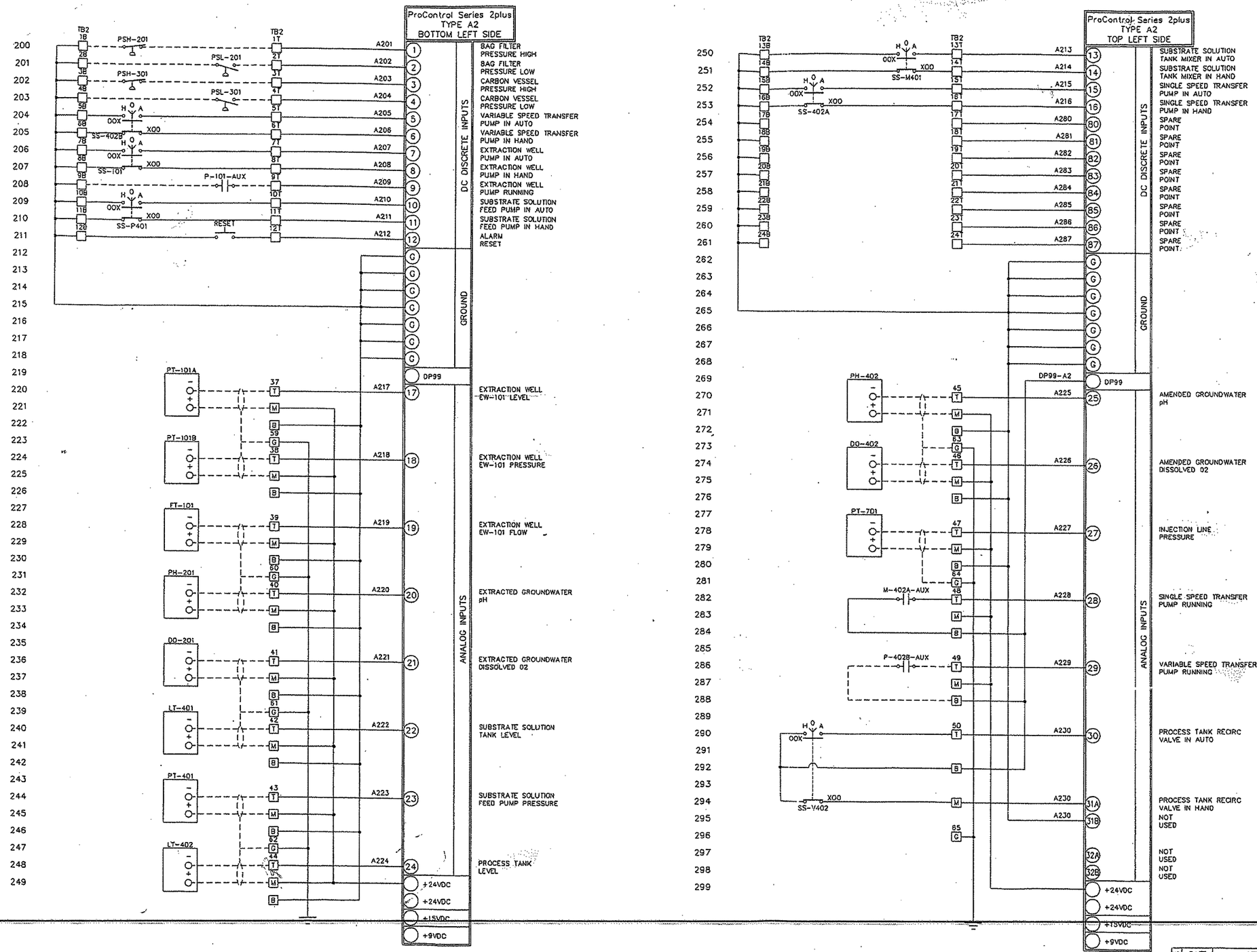

NO.	DATE	VERSION	DRAWN BY	CHKD.	APPROVED BY
1	4/19/04	INITIAL RELEASE	FS	WJS	WJS
2	06/17/04	AS BUILT	BB	WJS	

TOTAL SYSTEMS DESIGN INC.
901 SOUTH BOMAR STREET, SUITE N
WEST CHESTER, PA 19382
VOICE: 484-356-0288 FAX: 484-356-0293

ENVIRONMENTAL ALLIANCE, INC.
1812 NEWPORT GAP PIKE, WILMINGTON, DE
DEEP GROUNDWATER SYSTEM
MAIN CONTROL PANEL
I/O WIRING

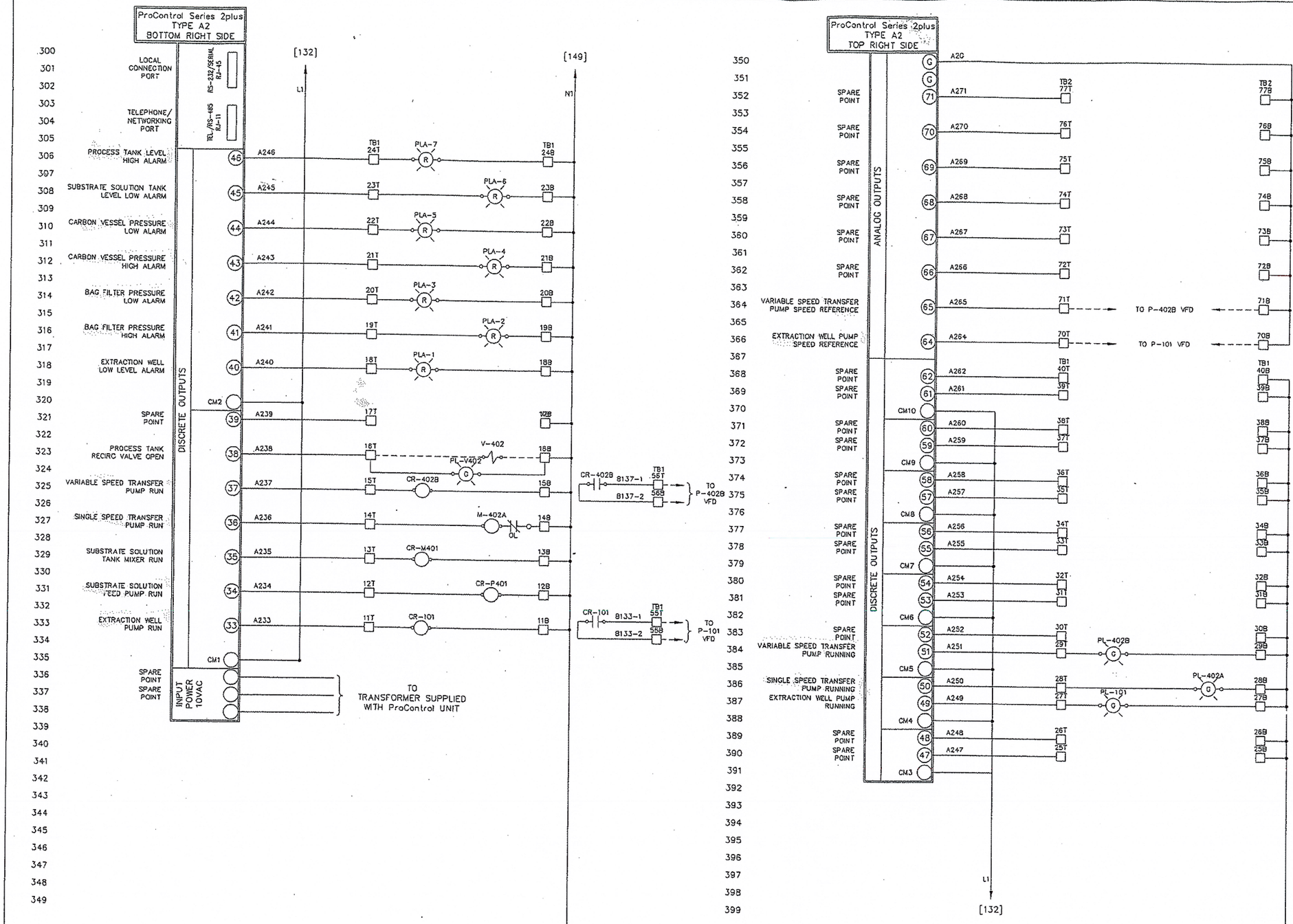

NO.	DATE	VERSION	DRAWN BY	CHCK.	APPROVED BY
1	4/19/04	INITIAL RELEASE	FS	WJS	WJS
2	06/17/04	AS BUILT	BB	WJS	WJS

TOTAL SYSTEMS DESIGN INC.
301 SOUTH BOLMAR STREET, SUITE N
WEST CHESTER, PA 19382
VOICE: 484-356-0288 FAX: 484-356-0293

ENVIRONMENTAL ALLIANCE, INC.
1812 NEWPORT GAP PIKE, WILMINGTON, DE
DEEP GROUNDWATER SYSTEM
MAIN CONTROL PANEL
I/O WIRING

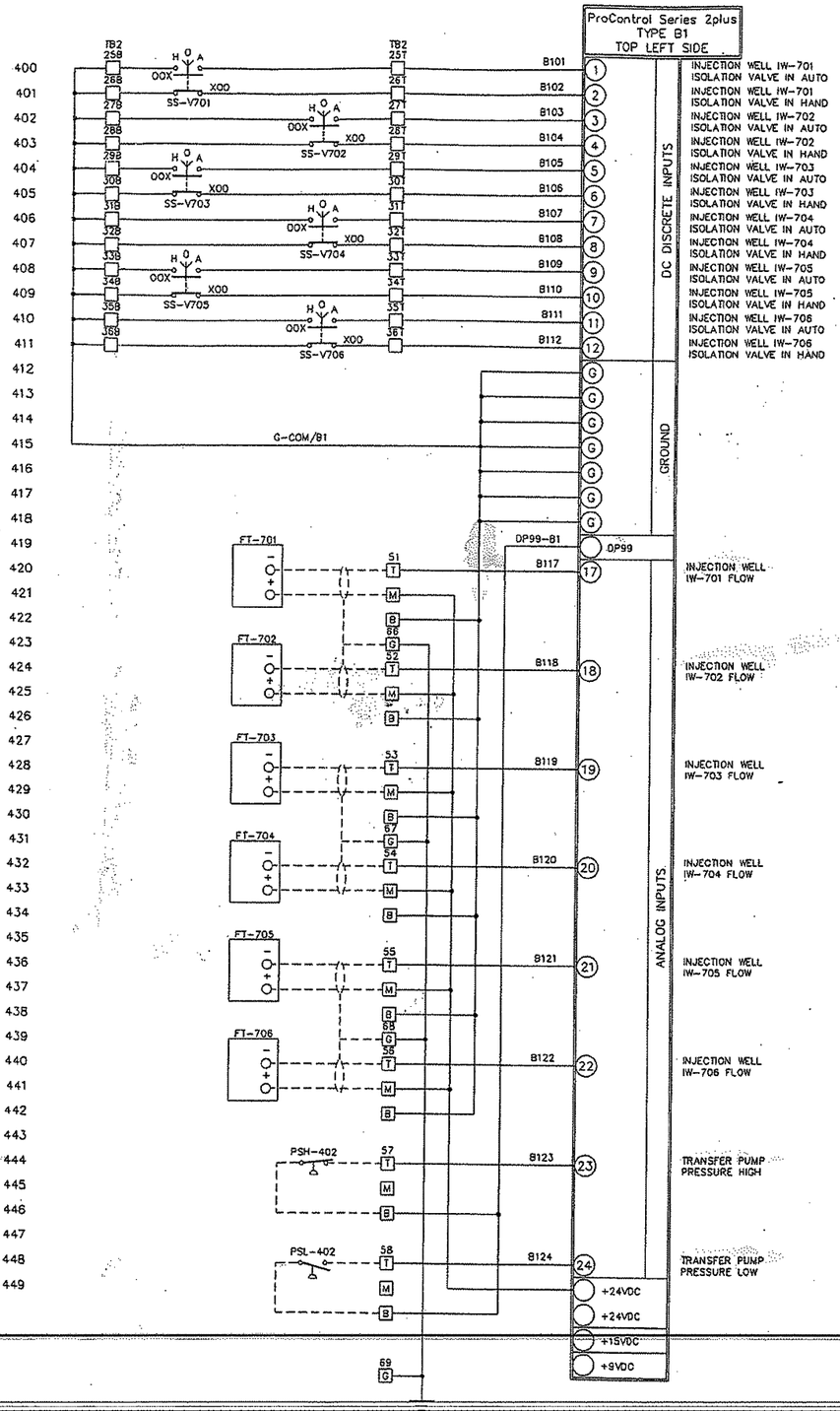

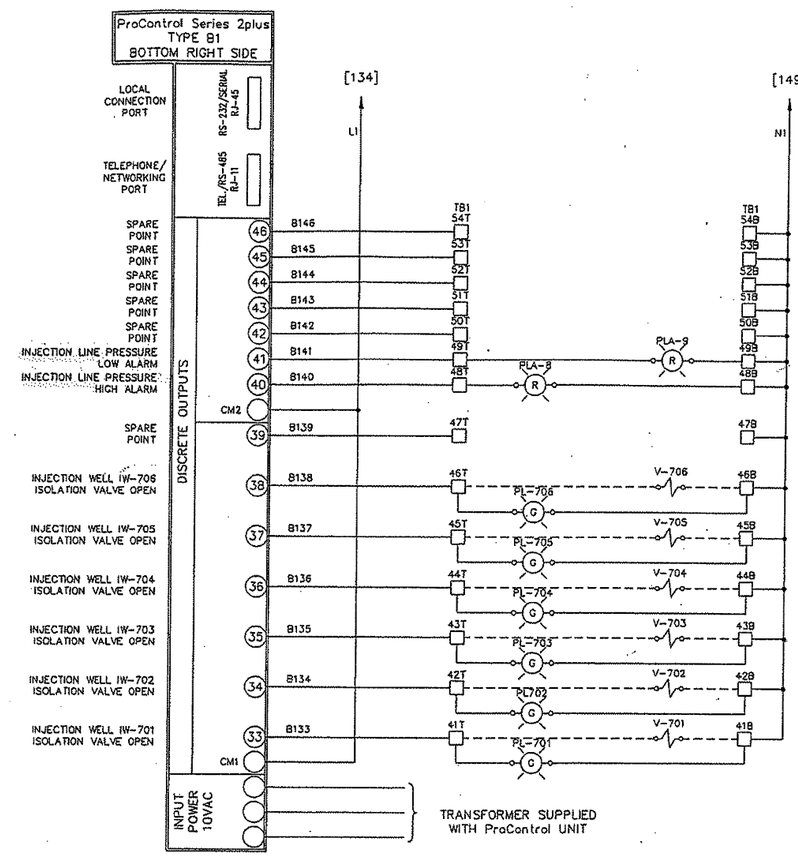

NO.	DATE	VERSION	DRAWN BY	CHK'D	APPROVED BY
1	4/19/04	INITIAL RELEASE	FS	WJS	WJS
2	08/17/04	AS BUILT	BB	WJS	WJS

TOTAL SYSTEMS DESIGN INC.
901 SOUTH BOLMAR STREET, SUITE N
WEST CHESTER, PA 19382
VOICE: 484-356-0288 FAX: 484-356-0293

ENVIRONMENTAL ALLIANCE, INC.
1812 NEWPORT GAP PIKE, WILMINGTON, DE
DEEP GROUNDWATER SYSTEM
MAIN CONTROL PANEL
I/O WIRING

PROCONTROL series 2 plus

TYPE A
Product Specification

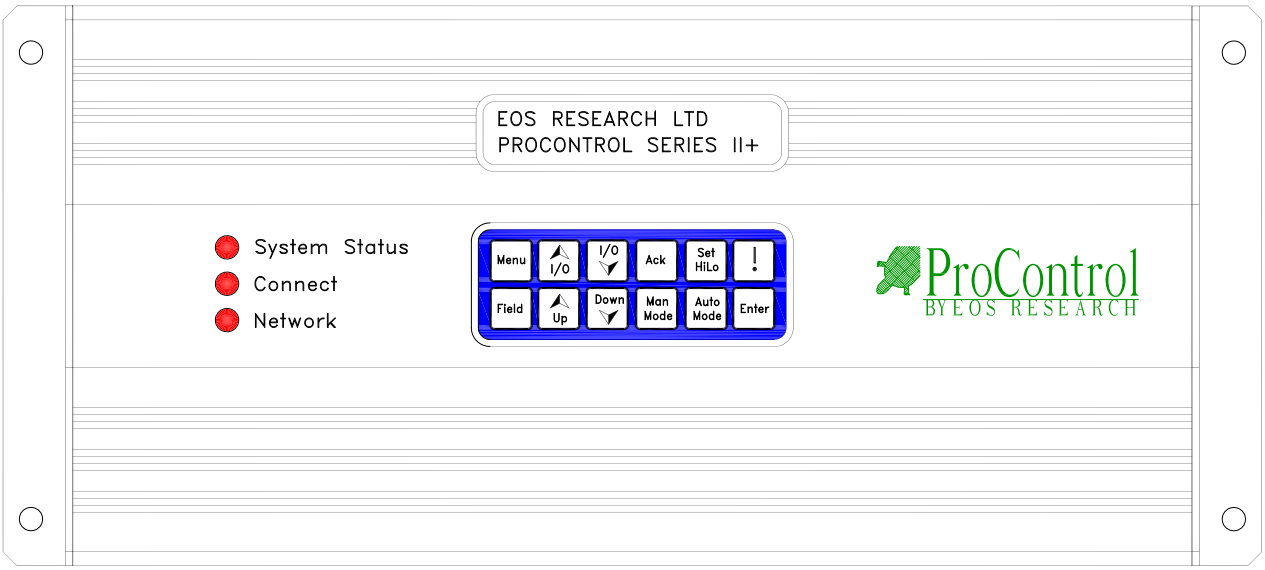

The next generation **Type A** ProControl features a capacity of up to 78 industrially-hardened inputs and outputs in a small and easy-to-use package. The **Series 2**^{plus} contains everything you need for the core of your control/monitoring system, including the ability to drive motor starters, solenoids and other devices directly from built-in relay outputs. The **Series 2**^{plus} includes expanded datalogging and reporting capability, a built-in power supply for your instruments and transducers, as well as pluggable connectors for all I/O. The **Type A** features higher I/O counts, large datalog memory, greater process control capacity, and a vacuum fluorescent display. Available with Ethernet, cellular data modem and analog phone modem communication options.

	Model A1	Model A2
INPUTS		
Discrete	Sixteen (16) protected discrete inputs. Support for 4 flowmeters or pulse accumulators with rates to 500Hz.	Twenty-Four (24) protected discrete inputs (eight of these are status inputs). Support for 4 flowmeters or pulse accumulators with rates to 500Hz.
Analog	Sixteen (16) 4-20ma inputs with built-in 24Vdc supply. Inputs are surge and short-circuit protected and may also be used as discrete inputs	Sixteen (16) 4-20ma inputs with built-in 24Vdc supply. Inputs are surge and short-circuit protected and may also be used as discrete inputs
OUTPUTS		
Discrete	Twenty-two (22) relay outputs - 14 rated @ 1A, remainder @ 0.5A, 120V	Thirty (30) relay outputs - 14 rated @ 1A, remainder @ 0.5A, 120V
Analog		Eight (8) 4-20ma outputs. PID loop control.

Specifications subject to change without notice.

	Model A1	Model A2
DATALOGGING		
Discrete	30,000 points standard. All logging occurs on change of state.	30,000 points standard. All logging occurs on change of state.
Analog	80,000 points standard (5000 per channel)	80,000 points standard (5000 per channel)
Event	10,000 points standard.	10,000 points standard.
Totalizer	50 points per channel	50 points per channel
COMMUNICATIONS		
Ethernet, cellular IP:	ProView™ Software, real-time monitoring from any broadband connection. Alarm and Status Emails, text messaging on alarm	
Analog phone modem:	ProView™ Software, real-time monitoring from any phone line. Alarm and Status fax reports, text/pager messages (email optional)	
ProControl Network:	Optional, can be linked via RS-485 for distributed control or higher I/O counts	
USER INTERFACE		
Display	VFD (Vacuum Fluorescent Display) 2 x 20 character display	
Keypad	2 x 6 membrane keypad.	
LEDs	LEDs: System Status, Communications Link, Networking	
PROCESS CONTROL		
System	Up to 64 regular system processes total with 16 startup and 16 shutdown processes, specified by easy-to-understand Boolean (IF...THEN) logic	
Alarms	Generate shutdowns, emails, FAX reports and/or text messages.	
Loops	PID loop control with user control of setpoint, proportional, integral and derivative gains and max change per calculation. Also open loop proportional algorithm.	
POWER		
System	10VAC, 50VA, external transformer provided	
I/O Supply	24 VDC, 15V and 9V available for powering sensors/instruments.	
ENVIRONMENTAL		
Dimensions	13.5" long x 6" wide x 3.5" high.	
Weight	7 lbs.	
Power Dissipation	30W max.	
Operating Temperature	-20C to +50C	
Humidity	95% R.H. non-condensing	

Crafted in the USA by people who know how to build something to last.

159 Walnut Street
Rochester, NH 03867
(603) 332-2099
(603) 332-2727 FAX
www.eosresearch.com

Specifications subject to change without notice.

PROCONTROL series 2 plus

TYPE B

Product Specification

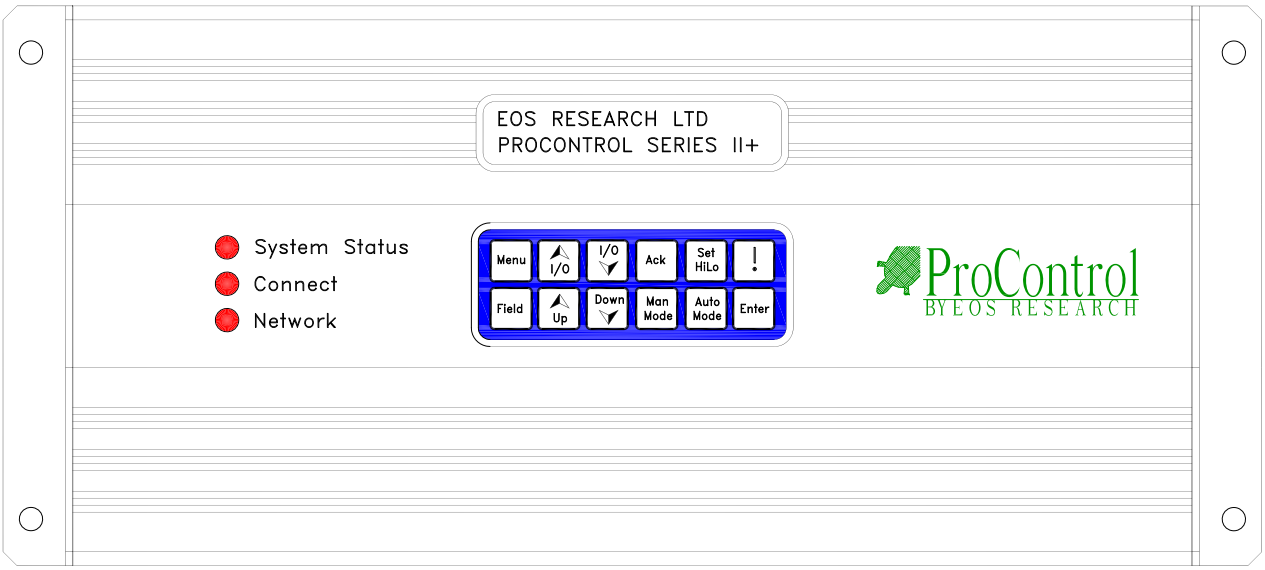

The next generation **Type B** ProControl features a capacity of up to 51 industrially-hardened inputs and outputs in a small and easy-to-use package. The **Series 2**^{plus} contains everything you need for the core of your control/monitoring system, including the ability to connect directly to 120V inputs, and to drive motor starters, solenoids and other devices directly from built-in relay outputs. The **Type B** includes expanded datalogging and reporting capability, a built-in power supply for your instruments and transducers, as well as pluggable connectors for all I/O. It's a truly capable SCADA system for your operation. Available with Ethernet, cellular data modem and analog phone modem communication options.

	Model B1	Model B2
INPUTS		
Discrete	Twelve (12) protected discrete inputs. Support for 4 flowmeters or pulse accumulators with rates to 200Hz.	Fourteen (14) protected discrete inputs. Eight (8) optically isolated inputs. Support for 6 flowmeters or pulse accumulators with rates to 200Hz.
Analog	Eight (8) 4-20ma inputs with built-in 24Vdc supply. Inputs are surge and short-circuit protected and may also be used as discrete inputs	Ten (10) 4-20ma inputs with built-in 24Vdc supply. Inputs are surge and short-circuit protected and may also be used as discrete inputs
OUTPUTS		
Discrete	Fourteen (14) relay outputs rated @ 1A, 120V	Fourteen (14) relay outputs rated @ 1A, 120V
Analog		Five (5) 4-20ma outputs. PID loop control.

Specifications subject to change without notice.

	Model B1	Model B2
DATALOGGING		
Discrete	2,000 points standard. 30,000 points optional. All logging occurs on change of state.	30,000 points standard. All logging occurs on change of state.
Analog	16,000 points standard (2000 per channel). 40,000 points optional.	20,000 points standard (2000 per channel). 50,000 points optional.
Event	2,000 points standard. 10,000 points optional.	2,000 points standard. 10,000 points optional.
Totalizer	50 points per channel	50 points per channel
COMMUNICATIONS		
Ethernet, cellular IP:	ProView™ Software, real-time monitoring from any broadband connection. Alarm and Status Emails, text messaging on alarm	
Analog phone modem:	ProView™ Software, real-time monitoring from any phone line. Alarm and Status fax reports, text/pager messages (email optional)	
ProControl Network:	Optional, can be linked via RS-485 for distributed control or higher I/O counts	
USER INTERFACE		
Display	Rugged LCD (Liquid Crystal Display) 2 x 20 character display	
Keypad	2 x 6 membrane keypad.	
LEDs	LEDs: System Status, Communications Link, Networking	
PROCESS CONTROL		
System	Up to 64 regular system processes total with 16 startup and 16 shutdown processes, specified by easy-to-understand Boolean (IF...THEN) logic	
Alarms	Generate shutdowns, emails, FAX reports and/or text messages.	
Loops	PID loop control (Type B2 only) with user control of setpoint, proportional, integral and derivative gains and max change per calculation. Also open loop proportional algorithm.	
POWER		
System	10VAC, 30VA, external transformer provided	
I/O Supply	24 VDC, 15V and 9V available for powering sensors/instruments.	
ENVIRONMENTAL		
Dimensions	13.5" long x 6" wide x 3.5" high.	
Weight	6 lbs.	
Power Dissipation	25W max.	
Operating Temperature	-20C to +50C	
Humidity	95% R.H. non-condensing	

Crafted in the USA by people who know how to build something to last.

E O S research

159 Walnut Street
Rochester, NH 03867
(603) 332-2099
(603) 332-2727 FAX
www.eosresearch.com

Specifications subject to change without notice.

ProView™

for ProControl Series 2plus

USER'S GUIDE

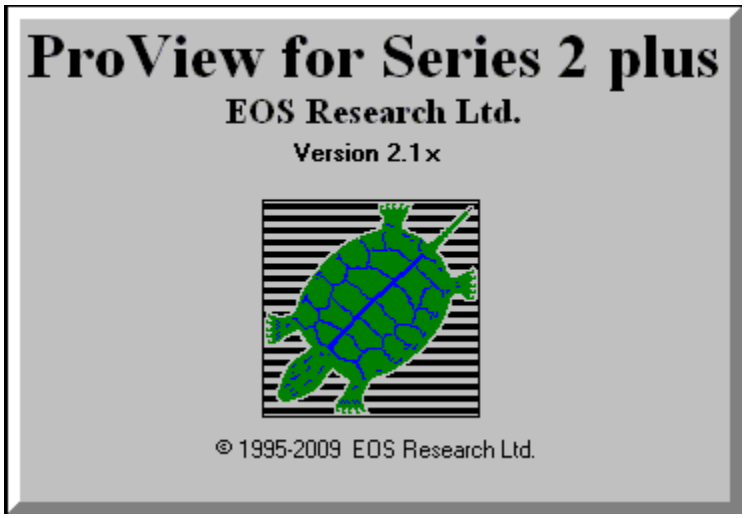

Version 2.1x

EOS Research, Ltd.

LICENSE: EOS Research, Ltd. grants you the right to use the enclosed program (the "Software"). You will not use, copy, modify, rent, sell or transfer the Software or any portion thereof except as provided for in this agreement.
You may:

1. Use the software on up to *two* computers
2. Copy the software solely for backup or archival purposes

RESTRICTIONS: You will not:

1. Use the Software or cause the Software to be used on more than *two* computers at the same time.
2. Sub-license the Software.
3. Reverse engineer, decompile or disassemble the Software
4. Copy the Software except as provided in this agreement.
5. Permit simultaneous use of the Software by more than two users.

TRANSFER: You may transfer ownership of this license to another party if the receiving party agrees to the terms of this Agreement and you retain no copies of the Software and accompanying documentation.

Transfer of the license terminates your right to use the Software.

OWNERSHIP AND COPYRIGHT OF SOFTWARE: Title to the Software and all copies thereof remain with EOS Research Ltd. or its vendors. The Software is copyrighted and is protected by United States copyright laws and international treaty provisions. You will not remove the copyright notice from the Software. You agree to prevent any unauthorized copying of the Software.

WARRANTY: EOS Research, Ltd. warrants that it has the right to license you to use the Software.

EOS Research Ltd. warrants that the media on which the Software is furnished will be free from defects in materials and workmanship under normal use for a period of one year from the date of purchase. EOS Research Ltd.'s entire liability and your exclusive remedy shall be the replacement of the Software if the media on which the Software is furnished proves to be defective. This warranty is void if the media defect has resulted from accident, abuse or misapplication. Any replacement of media shall be warranted for the remainder of the original warranty period or 90 days, whichever is longer.

DISCLAIMER: Except as provided above, the Software is provided "AS IS" without warranty of any kind.

LIMITATION OF LIABILITY: THE ABOVE WARRANTIES ARE THE ONLY WARRANTIES OF ANY KIND, EITHER EXPRESSED OR IMPLIED, INCLUDING WARRANTIES OR MERCHANTABILITY AND FITNESS FOR A PARTICULAR PURPOSE. NEITHER EOS RESEARCH LTD. OR ITS VENDORS SHALL BE LIABLE FOR ANY LOSS OF PROFITS, LOSS OF USE, INTERRUPTION OF BUSINESS, NOR FOR INDIRECT, SPECIAL, INCIDENTAL, OR CONSEQUENTIAL DAMAGES OF ANY KIND WHETHER UNDER THIS AGREEMENT OR OTHERWISE.

AUDIT: EOS Research Ltd. reserves the right to conduct or have conducted audits to verify your compliance with this Agreement.

TERMINATION OF THIS LICENSE: EOS Research Ltd. may terminate this license at any time if you are in breach of any terms or conditions. Upon termination, you will immediately destroy the Software or return all copies of the Software to EOS Research Ltd. along with any copies you have made.

U.S. GOVERNMENT RESTRICTED RIGHTS: The Software and documentation are provided with "RESTRICTED RIGHTS." Use, duplication, or disclosure by the U.S. Government is subject to restrictions as set forth in FAR52-227-14 and DFAR252-227-7013 et seq or its successor.

EXPORT LAWS: You agree that neither the Software nor the direct product thereof is intended to shipped either directly or indirectly to foreign countries unless a validated export license is obtained from the U.S. Department of Commerce.

APPLICABLE LAWS: This Agreement is governed by the laws of the State of New Hampshire and the United States, including patent and copyright laws. Any claim arising out of this Agreement will be brought in Rockingham County, New Hampshire.

EOS RESEARCH, LTD.

SOFTWARE LICENSE AGREEMENT

By using this Software you are agreeing to be bound by the terms of this Agreement. Do not use the Software until you have carefully read and agreed to the preceding terms and conditions. If you do not agree to the terms of this agreement, promptly return this document and any accompanying items.

Information in this document is subject to change without notice and does not represent a commitment on the part of EOS Research, Ltd. No part of this manual may be reproduced or transmitted in any form or by any means, electronic or mechanical, including photocopying and recording, for any purpose without the express written consent of EOS Research, Ltd.

© 1995-2009 EOS Research, Ltd. All rights reserved. Printed in the United States of America.

ProView and **ProControl** are trademarks of EOS Research, Ltd.

Windows, **Excel** and **Access** are trademarks of Microsoft Corporation.

EOS Research, Ltd.
159 Walnut Street
Rochester, NH 03867
Voice: 603.332-2099
FAX: 603.332-2727
Email: procontrol@eosresearch.com

TABLE OF CONTENTS

CHAPTER 1: INTRODUCTION AND INSTALLATION....1

Introduction to PROVIEW 1
System Requirements 1
How to Install ProView from Windows Explorer 2
Running ProView 3
A Word About Changing Settings 4

CHAPTER 2: GETTING STARTED....5

Opening a Site File 5
Examining the Main Screen 7
Printing the Setup to File 9
Examining the Setup File 10
Input and Output Configuration 12
Process Tasks 13
Process Capability 14

CHAPTER 3: ESTABLISHING COMMUNICATION 16

Local Connection 16
Remote Connection 18
Ending a Connection 19
Sending a Memo 20

CHAPTER 4: MANAGING YOUR SITE....22

Switching Between System Modes 22
System Operations 23
- Date & Time 23
- Alarms 24
- Remote Reporting 24
- Log Off Remote User 24
- Initiate FAX NOW! 24
- Initiate New FAX NOW! 25

CHAPTER 5: CHANGING SYSTEM PARAMETERS 26

Switching an Output State 26
Process Groups 26
Output Cycle 27
Output Options 27
Notes 28
Analog Alarm Levels 28
Site Information 30
FAX Report Setup 31
Paging Setup 32
Datalogging Setup 34
Changing the Password 35
Analog Output Options 36
Process and Instrumentation Diagram 39

CHAPTER 6: WORKING WITH LOGGED DATA 41

Hour Meters 41
Totalizers 42
Trend Graphing 42
Downloading Logged Data 43
Getting Logged Data 44
Looking at Discrete Data 45
Looking at Events Data 46
Looking at Analog Data 46
Saving Logged Data to File 49
Opening a Datalog File 50
Exporting Logged Data for use in Other Applications 51

CHAPTER 7: OTHER OPERATIONS 53

Saving the Site Configuration to File 53
Printing the Current Data to File 54
Reviewing the Process Configuration 56
Annunciators 57
Exiting ProView 57

CHAPTER 1: INTRODUCTION AND INSTALLATION

This chapter provides a brief introduction to ProView features, system requirements for running the program, and instructions for installing it.

Introduction to PROVIEW

ProView is a powerful but straightforward software package used in conjunction with the ProControl system to provide integrated stand-alone control and remote telemetry for your operation. ProView versions 2.1 and higher can serve as an on-site or remote human-machine interface (HMI) for both the Series II and Series **2**^{plus} ProControls. With ProView you can:

- Monitor system sensors
- Control equipment that are outputs on the ProControl
- Change the way the system operates
- View and change system setpoints, alarm levels, etc.
- Extract datalogged system information

In short, ProView can be used to remotely gain the same level of control over your operation as if you were at the site. Although many system parameters can be set with the ProControl's display and keypad (if included), ProView allows a more comprehensive, easy-to-access view into system operations.

In order for ProView to function, your PC must be connected to the ProControl unit. It can be connected in one of two ways. The first way is with a cable (provided with your ProControl system) that connects your PC's serial port with the ProControl unit. This method of connection is most often used at the system site using a laptop PC. The second method is via dial-up modem from your office or from anywhere that a connection to the telephone system can be established.

You should be familiar with the operation of the ProControl unit and have read the ProControl User Manual before using ProView.

System Requirements

COMPUTER: You will need an PC or compatible with a 486 (minimum) or greater microprocessor with 4MB RAM and Microsoft Windows version 3.1 or later. A minimum of 4MB of Hard Disk space needs to be available. A mouse or similar pointing device is also required.

Several functions in ProView require the use of the right mouse button. Make sure the right mouse button is not assigned to some other function such as double-click. See your mouse driver software for details.

MODEM: You need a Hayes compatible (AT) Modem that supports a data rate of 9600 baud (this means almost any commonly-available modem). The modem can be external or internal. It must be connected to COM Port 1, 2, 3 or 4.

*Some PCs are now being supplied with so-called "WinModems", which are not true hardware modems and will **not** work with ProView for communication with a ProControl system. A true Hayes-compatible hardware modem is an inexpensive investment in reliable communications.*

How to Install ProView from Windows Explorer

1. Close **all** open programs before beginning the ProView installation procedure. Close any task bars for software packages like Microsoft Office that may be lurking at the edge of your screen. *If a ProView installation fails, it is almost always the result of having other programs open at the time of installation. Certain programs, when included in the Windows Startup group, may cause the ProView installation to fail, and must be removed temporarily from the Startup group prior to installing ProView.*

2. Open the Windows Explorer and insert Disk 1 of the ProView diskettes in your **a:** drive.

3. Click on the **a:** drive, then double-click on the **setup.exe** file *Or* click on the Windows **Start** button, choose **Run…** and type in **a:setup.exe**.

4. The ProView installation program will begin and will guide you through the rest of the installation process.

After the appropriate files from Disk #1 have been installed, you will be asked to insert Disk #2, and then Disk #3. ProView uses a default folder of C:\ProView for the program installation, but you can specify a different one if you'd like.

You will also be provided with configuration files (or ***site files***) for every ProControl unit you need to access. At a minimum, you will have a configuration file with a ".pvs" extension and one with a ".not" extension (these are normally supplied pre-configured for you on a separate diskette). Using Windows Explorer, copy these site files to the folder in which your ProView software was installed. Depending on your site configuration, you may have other files included along with the two standard site files. The files will have the extensions of .pid or .pvg. You must copy these files to the ProView folder as well.

When the installation is complete, you will see the ProView program group and icon. We recommend making a shortcut to ProView that you can then move to your main Windows screen. *Right*-click on the ProView turtle icon in the program group, then click on **Create Shortcut**. Drag your new shortcut to a prominent position on your Windows main screen.

Running ProView

After installing ProView as described above, double-click on the ProView icon. After an introduction screen, you will see the ProView Main screen.

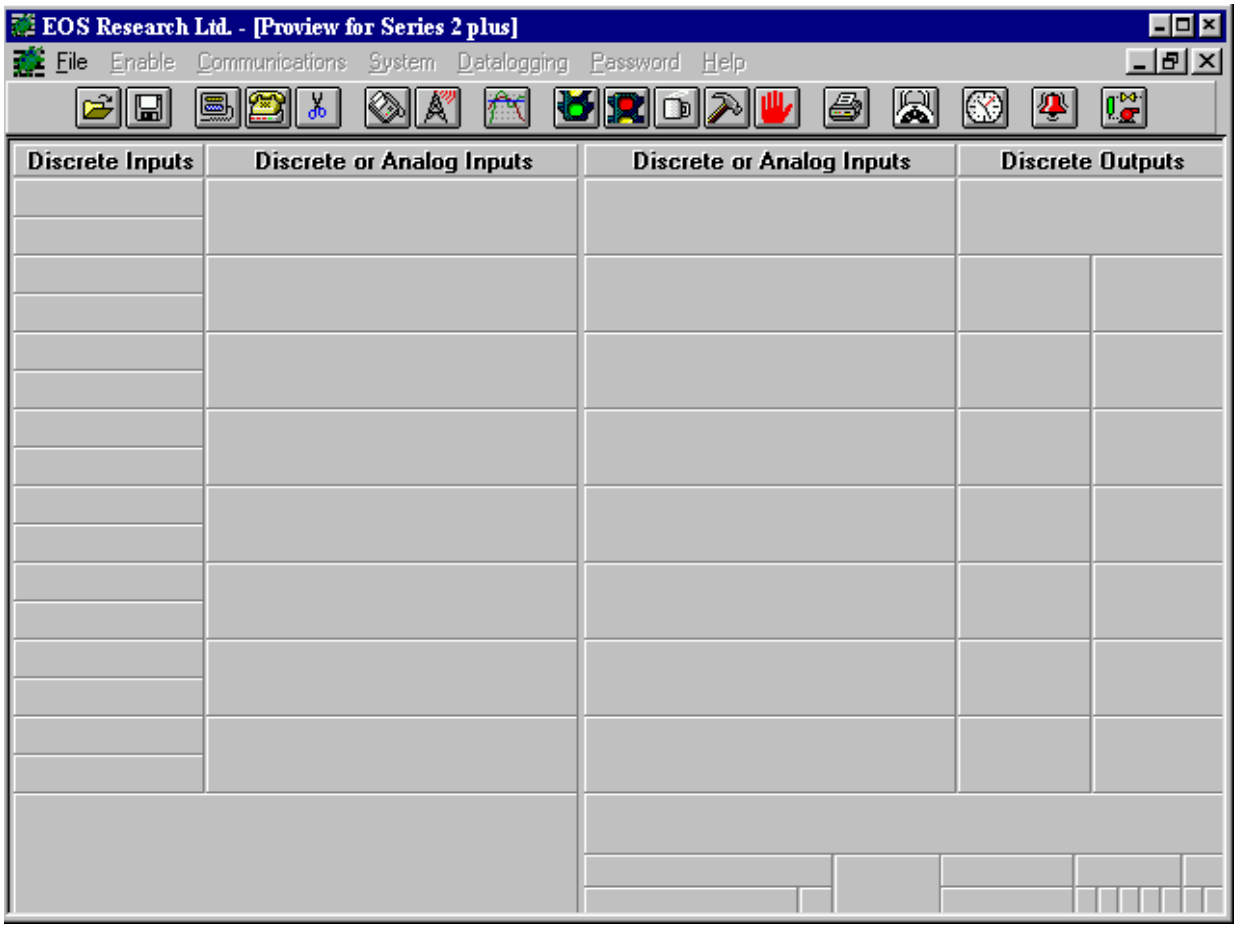

The main screen contains a series of pull-down menus and a ***Toolbar*** that provides shortcut buttons for commonly-used commands. Placing the cursor over a Toolbar button and leaving it there for a short while produces a "balloon". A ***balloon*** is a small pop-up message that describes the action to be taken if the Toolbar button is "pushed".

Right now, since no site file has been loaded, the main screen is blank, and the toolbar is disabled. All menus except the **File** menu have been "ghosted". A selection is ghosted when the operation represented by the selection is unavailable.

Below the Toolbar are four columns of information arranged in a standard format. These columns are filled in based on the system setup and the current system status. The **Discrete Inputs** column contains information about the switches or sensors connected to inputs 1 through 16 on the ProControl unit. The two columns labeled **Discrete or Analog Inputs** contain information about the 4-20 milliamp (mA) sensors or discrete switches connected to ProControl inputs 17 through 32 (examples include analog instruments such as flow meters or pressure transducers and digital devices such as float switches). The **Analog Outputs** area

resides behind the third column, and is accessed by clicking on the **Discrete or Analog Inputs** label at the top of the column. The **Discrete Outputs** column contains information regarding the devices connected to the ProControl's output relays. The **Extended Outputs** area, behind the **Discrete Outputs** column, contains information regarding any outputs configured beyond the first 14, if available on the ProControl model you are using.

At the bottom of the screen are a series of information boxes. These show the status of certain important system parameters when ProView is connected to a ProControl unit.

A Word About Changing Settings

ProView has been designed to make it easy to view and change the settings that govern the way your system works. However, ProView must always be *connected* to the ProControl unit in order for these changes to take effect. It is important to remember that ProView itself is only a window into the operation of the ProControl unit. It does not provide any control functionality on its own. Chapter 3 discusses how to connect to the ProControl.

When a setting is changed in ProView (e.g., alarm level, password, datalog interval), a "?" is temporarily appended to the description or title of the information to indicate that the new value has been sent to the ProControl. When the "?" disappears, the data has been received by the ProControl and confirmed by ProView.

While many of the controls that change information in ProView are represented graphically, much of the information is displayed in text form. To edit text-based information, click on it and make your changes as you would in any Windows application. When you click on the text, it is highlighted to show that it has the current focus.

*After completing your text editing the changes must be saved by first pressing the **ENTER** key while the cursor is still within the text box being edited, and then clicking on the "OK" button for the current form.*

CHAPTER 2: GETTING STARTED

This chapter explains how to open a ProView site file, describes what's in all those little boxes on the screen, and shows you how to print the system configuration to a file.

Opening a Site File

Every ProControl unit has a ***site file*** that tells the unit which inputs or outputs are enabled, what their descriptive ***Tagnames*** are and how they should respond to changes in input status. This same file is used by ProView to provide a window into what is going on within the remote ProControl unit and, by extension, with the site operation. To open a site file:

1. Click on the **File** menu, then click **Open Site**. You will see the **Open Site** dialog box. You can also use the ALT-Key combination represented by the first underlined character in the menu name. In this case, use ALT-F.

   *For opening subsequent site files, you can use the **Open Site** Toolbar button at the top of the main screen. ProView will also list the last four site files that you accessed at the bottom of the **File** menu. If you wish to open one of these, just click on the appropriate file name.*

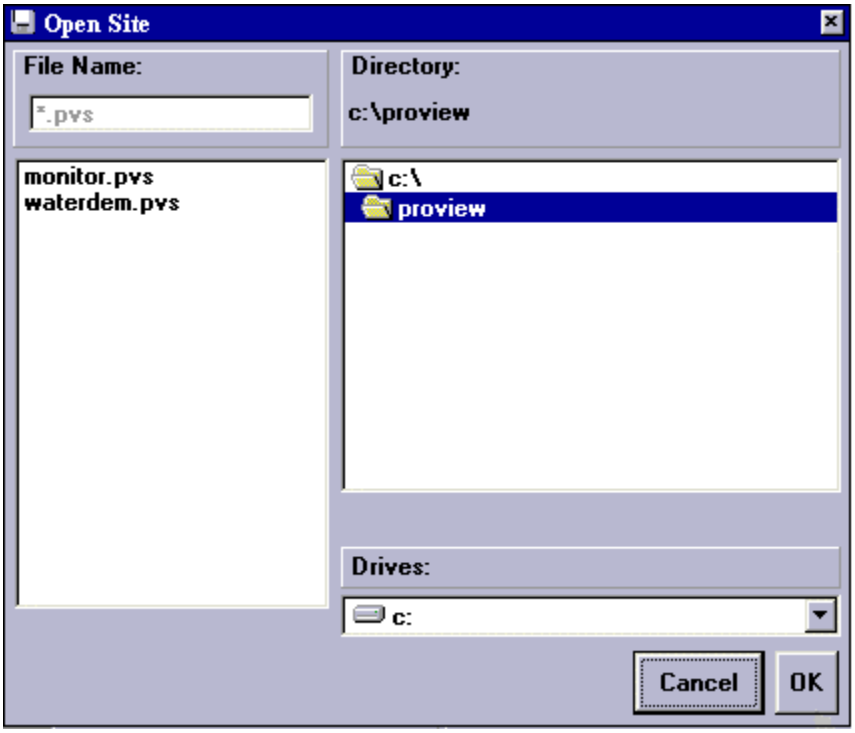

2. In the **Drives** area of the dialog box click once on the down arrow to pull down the Drives list, then click on the drive that contains the file you wish to open.

3. In the **Directory** area of the dialog box, click on the folder that contains the file. To move "up" in the directory tree, double-click on the level to which you want to move. To move "down" in the directory structure, double-click on the appropriate folder.

4. In the **File** area you will see all files in the selected drive and folder that have the extension **.pvs** or **.pvg**. Only files with these extensions can be opened. Select the file you wish to open by clicking on the file name in the file list box, then click the **OK** button to open the selected file.

The title bar of the main screen will change to include the file name and version number. The file name and version number are enclosed within brackets.

5. In the **Security** dialog box, enter the password for your site file, and click on the **OK** button or hit Enter.

A word about passwords: *The password used in ProView can be different than the one used to access the ProControl unit through its on-board display. In either case the valid characters are 0-9 and A-Z, upper case only. Up to three characters are permitted. The password was designed as a low-level security feature sufficient to prevent inadvertent operation and to deter tampering. It is* ***NOT*** *sufficient in and of itself to withstand a* ***determined*** *effort at system entry. The default password is supplied to you with your ProControl unit by your system integrator.*

6. If the password is incorrect, the dialog box will disappear and a beep will sound. No system configuration information will be shown. You will need to select the **Password** menu and re-enter it.

7. If the password is correct, the **Security** dialog box will disappear and the system configuration information will be shown on the main screen.

FYI

ProView is supplied with a View-Only Mode password, "VOM", which may be used to connect to the ProControl to observe the system status and obtain logged data; however, no changes to any ProControl operating settings may be made when in this mode.

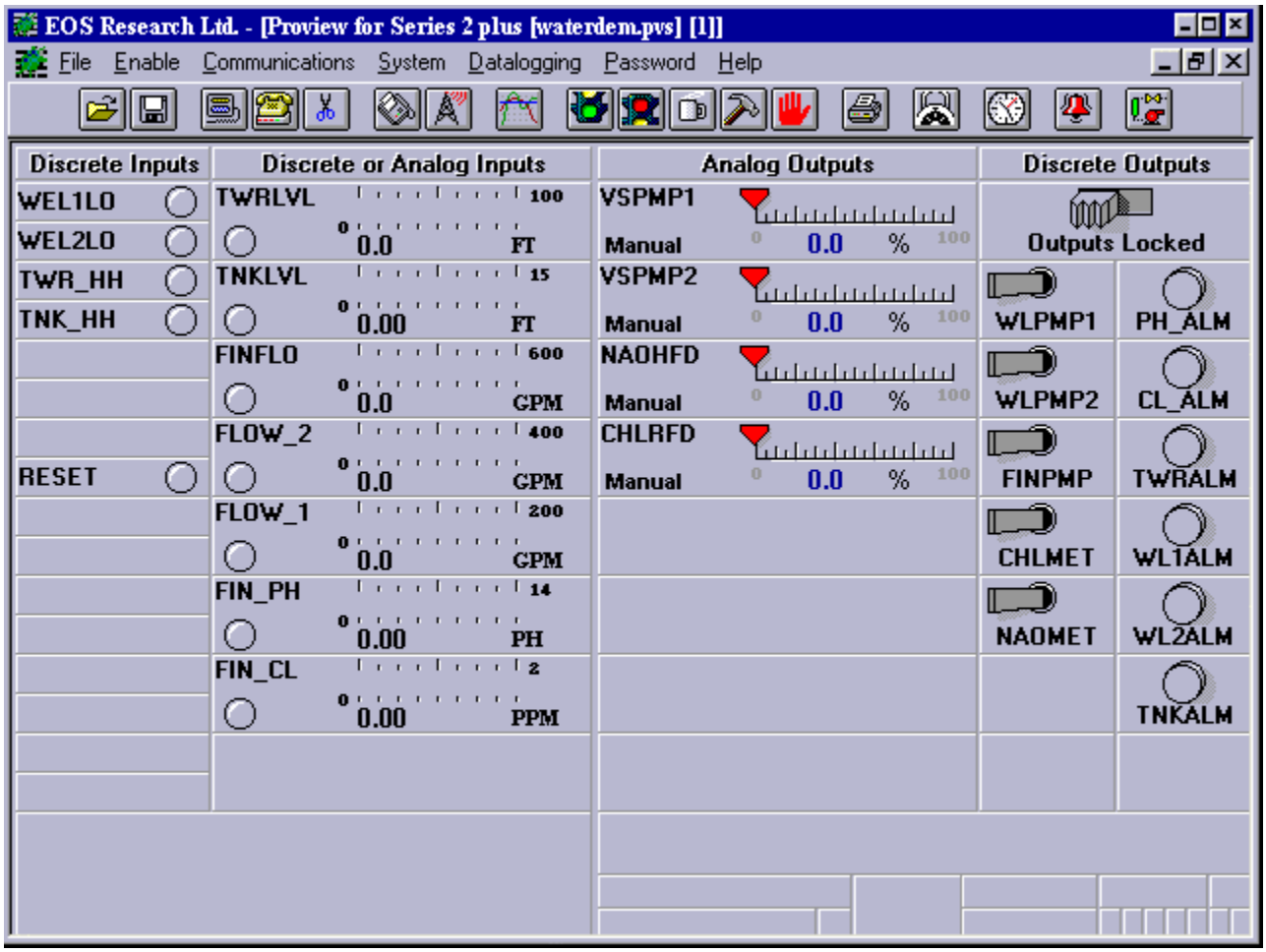

Examining the Main Screen

This particular site file shows five discrete inputs, seven analog inputs, eleven discrete outputs, and four analog outputs.

Discrete Inputs

On the left side of the screen below the heading **Discrete Inputs** are shown the tagnames of enabled discrete (or digital) inputs. To the right of the tagname is a virtual "LED". This LED's color or shape will change based on the status of the input. If a discrete input is "OFF", the LED next to the tagname is gray in color. If a discrete input is "ON", then the LED is green. If the discrete input is "ON" and has been set up as an alarm input the LED becomes a red "Alarm Bell". Some panels are blank because those inputs have not been enabled in this particular site configuration.

Analog Inputs

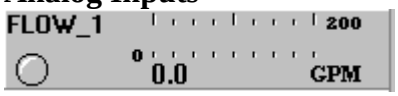

In the second column below the heading **Analog or Discrete Inputs** are shown the enabled analog inputs. Analog inputs can also be configured as simple discrete inputs. Below the tagname is another LED. This LED behaves in a similar fashion to those for discrete inputs; it is gray when the input is not "active", and green or red when it is in the active state (see the definition for Active State in the ProControl User Manual). A small bar graph provides a visual indication of the value of the analog input. At the left and right ends of the bar graph are numbers that represent the lower and upper limits, respectively, of the analog input values (corresponding to 4 and 20 mA). In this case FLOW_1 has been set up with a range of 0 to 200 GPM. Below the bar graph is a numerical representation of the current value of FLOW_1.

Discrete Outputs

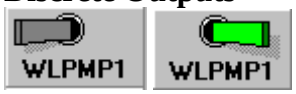

On the right side of the screen below the heading **Discrete Outputs** are shown the enabled discrete outputs, corresponding to the relay outputs in the ProControl. In this site configuration there are 11 outputs. Above the tagname of the output is either a virtual "Toggle Switch" or lamp/button representation. By its position and/or its color it shows the state of discrete output: if the switch is left-leaning and gray the output is "OFF"; if the switch is right-leaning and green then the output is "ON".

Discrete outputs can be configured as an alarm lamp or button when this would be more appropriate. If the lamp/button appears gray then the output is "OFF". If the lamp/button appears red or green then the output is "ON".

Your system may also have **Extended Outputs**, which are located on a panel behind the discrete outputs. To access these outputs, point your mouse at the words **Discrete Outputs** at the top of the column and click the left mouse button.

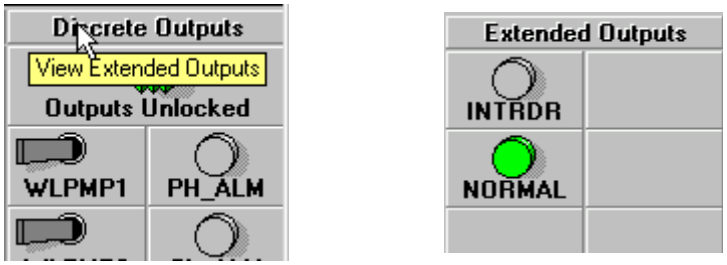

FYI

Regardless of what the discrete outputs look like in ProView, they all behave the same way on the ProControl itself – namely, the associated relay output is energized when the output is ON.

Analog Outputs

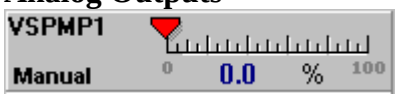

The third column contains the **Analog Outputs** area. It may be concealed by the second column of **Discrete or Analog Inputs**. To pull the analog outputs to the front, click on the title **Discrete or Analog Inputs** at the top of the third column of the ProView screen.

To the right of the tagname there is a slide-scale that indicates the current percentage of full-scale output (0% to 100%), displayed both graphically and with text. Below the tagname is the current mode of the output. This mode can be changed from **Manual**, which indicates the output is under user control, to **PID** or **PRO**, which would indicate that the output is involved in an output control scheme and is under automatic control. These output control schemes are described in Chapter 5 under Analog Output Options.

Printing the Setup to File

A more detailed listing of the site configuration can be made by printing the setup data to a text file. To print the setup, do the following:

1. Click on **Print Setup** in the **File** menu.
   Or
   Click on the Print Setup button.

2. You will see the **Print Setup to File** dialog box.

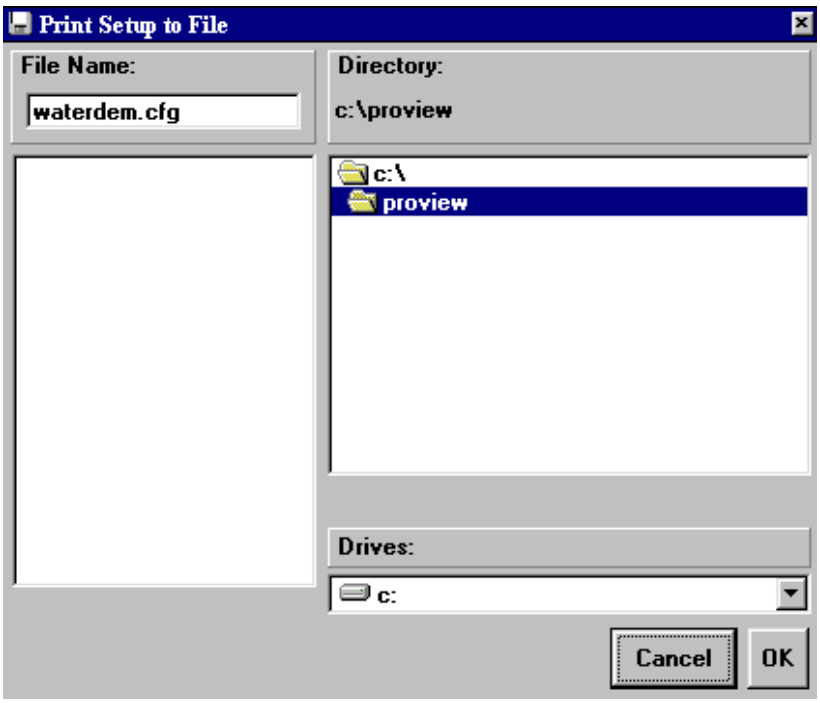

3. Specify the drive and folder in which the text file will be saved.

4. ProView will select a default file name for you, with the extension **.cfg**. However, you can give the file another name if you wish. You can also select an existing .cfg file name by clicking on the file name in the file list box.

5. Click on the OK button to print the setup to the selected file.

If you are overwriting an existing file, a message box pops up to make sure that you don't make a mistake.

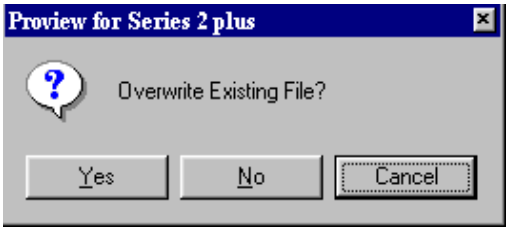

A word about Files:
Do not confuse the site configuration file (.pvs), which is a binary file, with the printed setup file (.cfg), which is a text file. A text file can be viewed with a word processing program while a binary file typically cannot.

Examining the Setup File

To examine your site configuration file, use a text editor or word processor such as Notepad or Word to open the file you have just created.

The file produced by our sample site is shown below. The first section consists of identifying information about the ProControl unit and information about the inputs and outputs wired to it.

```
                    EOS RESEARCH LTD.
                 ProControl Series II+

           ProView Configuration File Information


*******************************************************
***** FAX Recipient:     BULLWINKLE MOOSE          *****
***** Customer:          MAYBERRY WATER DEPT       *****
***** Site Location:     MAYBERRY RFD              *****
*******************************************************
***** Setup:             1                         *****
***** Option:            B                         *****
***** Type:              102                       *****
***** Serial Number:     7421                      *****
***** Date:              09/06/2000                *****
***** Time:              10:17:01                  *****
***** ProView:           Version 2.153             *****
*******************************************************
```

THE INPUTS INCLUDED IN THIS SYSTEM ARE:

#	TAGNAME	TAGNAME DESCRIPTION	SETUP*	RANGE
1	WEL1LO	Well 1 Low Level	D,NO,AL	
2	WEL2LO	Well 2 Low Level	D,NO,AL	
3	TWR_HH	Water Tower High Alarm Level	D,NO,AL	
4	TNK_HH	Clearwell Tank High Alarm Level	D,NO,AL	
8	RESET	Reset Switch	D,NO,ST,SU	
17	TWRLVL	Water Tower Level	A,EP,ST	0-100 FT
18	TNKLVL	Clearwell Tank Water Level	A,EP,AL	0-15 FT
19	FINFLO	Finish Flow Rate	A,EP,ST	0-600 GPM
20	FLOW_2	Well 2 Flow Rate	A,EP,ST	0-400 GPM
21	FLOW_1	Well 1 Flow Rate	A,EP,ST	0-200 GPM
22	FIN_PH	Finish Water pH	A,EP,AL	0-14 PH
23	FIN_CL	Finish Water Chlorine Residual	A,EP,AL	0-2 PPM

*INPUT SETUP NOTES

D - This input is a (Discrete) or ON/OFF Input.
A - This input is a (Analog) or Variable Input.
C - This input is a Pulse Flowmeter Input.
P - This input is a Pulse Accumulator Input.
UPP - Units per Pulse. Number of units (i.e. Gallons) to record for each pulse
NO-This input is a (Normally Open) Discrete Input.
NC-This input is a (Normally Closed) Discrete Input.
EP-(Endpoint) This input is "Active" when its value is outside the low to high alarm levels.
WD-(Window) This input is "Active" when its value is between the low and high alarm levels.
ST-(Status) This input shows a green LED in ProView when it is in its Active State.
AL-(Alarm) This input shows a red alarm bell in ProView when it is in its Active State.
SU-(Startup) This is a menu function input. When activated it will run the startup routine.
SD-(Shutdown) This is a menu function input. When activated it will run an emergency shutdown.
MN-(Manual) This is a menu function input. When activated it place the unit in Manual Mode.
AU-(Auto) This is a menu function input. When activated it place the unit in Auto Mode.
SQ-(Square Root) This analog channel's reading is proportional to the square root of the input.
LT-(Lamp Test)This is a Lamp Test input. When activated it will turn on all Alarm Light outputs.

THE DISCRETE OUTPUTS INCLUDED IN THIS SYSTEM ARE:

#	TAGNAME	TAGNAME DESCRIPTION	SETUP*
1	WLPMP1	Well 1 Pump	
2	WLPMP2	Well 2 Pump	
3	FINPMP	Finish Water Pump	
4	CHLMET	Chlorine Metering Pump	
5	NAOMET	Sodium Hydroxide Metering Pump	
8	PH_ALM	pH Alarm	AI
9	CL_ALM	Chlorine Alarm	AI
10	TWRALM	Water Tower High Alarm	AI
11	WL1ALM	Well 1 Low Level Alarm	AI
12	WL2ALM	Well 2 Low Level Alarm	AI
13	TNKALM	Clearwell Tank High Level Alarm	AI

*OUTPUT SETUP NOTES

G1-(Group 1)- This output will not respond to processes 17-32.
G2-(Group 2)- This output will not respond to processes 01-16.
LT-(Lamp Test) - This output has been declared as an alarm light.
AI-(Alternate Image) - This output is displayed as an icon other than the default switch.

```
THE ANALOG OUTPUTS INCLUDED IN THIS SYSTEM ARE:

#  TAGNAME               TAGNAME DESCRIPTION                    SETUP*   INPUT
-- ------- ------------------------------------------------- ---------- ------
1  VSPMP1  Variable Speed Drive for Finish Water Pump         PID,FOR    TWRLVL
2  VSPMP2  Variable Speed Drive for Well 2 Pump               PID,FOR    TNKLVL
3  NAOHFD  Caustic Soda Feed Rate                             PID,FOR    FIN_PH
4  CHLRFD  Chlorine Feed Rate                                 PRO,FOR    FLOW_2

*ANALOG OUTPUT SETUP NOTES
--------------------------
PID  -This output is involved in a PID (Proportional,Integral,Derivative) control loop.
PRO  -This output is involved in an open (Proportional) control loop.
FOR  -The PID or PRO loop will run in the (Forward) direction.
REV  -The PID or PRO loop will run in the (Reverse) direction.
INPUT-This Tagname will serve as the input to the control loop.
```

Input and Output Configuration

The INPUTS section identifies all enabled system inputs from 1 to 32 and describes how they are configured. the input number is followed by its TAGNAME and the TAGNAME DESCRIPTION, which is taken from the Notes file (more on that in Chapter 5). In addition, a SETUP section further identifies each input in terms of its signal nature, analog (A) or discrete (D); its configuration if discrete as Normally Open (NO) or Normally Closed (NC); and its alarm display nature when active, Alarm (AL) or Status (ST). Discrete Inputs can also be configured as functions such as Startup (SU) or Emergency Shutdown (SD), and can be used as a lamp tester (LT) which will illuminate any Discrete Outputs that are configured as lamps. A RANGE is specified for all Analog Inputs as well as the Active State region, denoted Endpoint (EP) or Window (WD).

See the ProControl User Manual for a further explanation of Normally Open, Normally Closed, and related terminology and a description of Endpoint and Window Active States.

The DISCRETE OUTPUTS section is similar except that there are some different SETUP codes. Some outputs may be assigned to groups (G1,G2) that affect the way they are viewed by the process tasks. Outputs which display an Alternate Image (lamp image) than the standard switch image are designated AI.

The ANALOG OUTPUTS section details the setup of any enabled 4-20 mA output loops. The SETUP codes PID and PRO indicate whether or not the output is involved in one of two analog output control schemes known as PID loops or open loop Proportional control. The direction of the analog output control scheme is indicated by forward (FOR) or reverse (REV). The input that provides the reference signal upon which the analog output scheme is based is designated under the INPUT heading.

For a further explanation of PID or open loop Proportional control please see the Analog Output Options section in Chapter 5.

In this particular setup, TWRLVL is the input to the PID control loop that operates on the variable speed pump VSPMP1, with VSPMP1 maintaining a "setpoint" for the value of TWRLVL. The chlorine feed rate CHLRFD will be varied in proportion to the flow rate FLOW_2 under open loop proportional control.

Process Tasks

The next section of the setup file is a listing of PROCESS CONTROL TASKS. These determine how the ProControl unit responds to input changes while in Auto, Startup or Shutdown modes. It is important to note that the ProView software does not take any independent action itself. All automated control decisions are made by the ProControl unit, although you can change many operating parameters via ProView.

```
THE PROCESS CONTROL TASKS EXERCISED BY THIS SYSTEM ARE:

Process 01: If WEL1LO is ON
            THEN Delay for 2 Seconds, Send Report[FAX #1;Page #1],
            Switch WLPMP1 OFF
            Page Message: 'Well 1 Low Level Mayberry North '

Process 02: If WLPMP1 is OFF AND PH_ALM is OFF AND
               CL_ALM is OFF AND TWRALM is OFF AND TNKALM is OFF
            THEN Delay for 30 Seconds, Switch WLPMP1 ON

Process 03: If FIN_PH is High
            THEN Delay for 5 Seconds, Switch NAOMET OFF AND PH_ALM ON

Process 04: If FIN_CL is High
            THEN Delay for 5 Seconds, Switch CHLMET OFF AND CL_ALM ON

Process 05: If TWR_HH is ON
            THEN Delay for 2 Seconds, Send Report[FAX #1;FAX #2;Page #1;Page #2],
            Initiate Shutdown, Switch TWRALM ON
            Page Message: 'Tower's about to overflow, Bullwinkle - COME OUT NOW! '

Process 06: If TNK_HH is ON
            THEN Delay for 2 Seconds, Send Report[FAX #1;FAX #2;Page #1;Page #2],
            Switch TNKALM ON
            Page Message: 'Clearwell Tank High Mayberry North '

Process 07: If TWRLVL is High
            THEN Delay for 5 Seconds, Switch TWRALM ON

Process 08: If TWRLVL is NOT High or Low
            THEN Delay for 5 Seconds, Switch TWRALM OFF

Process 09: If TNKLVL is High
            THEN Delay for 5 Seconds, Switch TNKALM ON

Process 10: If TNKLVL is NOT High or Low
            THEN Delay for 5 Seconds, Switch TNKALM OFF

Process 11: If FIN_PH is High or Low
            THEN Delay for 5 Seconds, Send Report[FAX #1;Page #1],
            Switch PH_ALM ON
            Page Message: 'Finish Water pH Alarm Mayberry North '

Process 12: If FIN_PH is NOT High or Low
            THEN Delay for 5 Seconds, Switch NAOMET ON AND PH_ALM OFF

Process 13: If FIN_CL is High or Low
            THEN Delay for 5 Seconds, Send Report[FAX #1;FAX #2;Page #1;Page #2],
            Switch CL_ALM ON
            Page Message: 'Finish Water Chlorine Alarm Mayberry North '

Process 14: If FIN_CL is NOT High or Low
            THEN Delay for 5 Seconds, Switch CHLMET ON AND CL_ALM OFF
```

```
Startup 01: Switch WLPMP1 ON AND PH_ALM OFF AND CL_ALM OFF AND TWRALM OFF AND WL1ALM OFF AND
WL2ALM OFF AND TNKALM OFF

Startup 02: Delay for 2 Seconds, Switch WLPMP2 ON

Startup 03: Delay for 2 Seconds, Switch FINPMP ON

Startup 04: Delay for 5 Seconds, Switch CHLMET ON AND NAOMET ON


Shutdown 01: Switch CHLMET OFF AND NAOMET OFF

Shutdown 02: Delay for 2 Seconds, Switch WLPMP1 OFF AND WLPMP2 OFF

Shutdown 03: Delay for 2 Seconds, Switch FINPMP OFF
```

This sample configuration has a fairly straightforward process flow. On startup, some of the system outputs are switched on sequentially and all alarm indicators are switched off. On shutdown, all pump outputs and chemical metering devices are turned off. The process tasks are mostly self-explanatory. Some process tasks include fax and pager reporting functions. It is important to remember how and when the process tasks are run:

- Process tasks are run continuously while the ProControl unit is in AUTO mode. Process control tasks are ***event-driven***, i.e., they occur once when the "IF…" conditions are true (subject to any delays). No automatic action is taken in MANUAL mode.

- Startup and Shutdown processes are run in sequence. When the Startup sequence is finished, the unit is placed in AUTO mode and the **Process Tasks** are run. If any Startup process in the sequence fails, then all the non-lamp outputs are turned "OFF" and the unit reverts to MANUAL mode. A Startup process fails when any IF condition is not satisfied for 60 seconds after the Startup process begins (there may not be any IF conditions in your Startup sequence). The Startup sequence begins when the ProControl or ProView operator initiates it. The Startup sequence can also begin when power is first applied to the ProControl unit if the "Auto Startup" option has been enabled.

- The Shutdown sequence works in a similar manner. When the Shutdown sequence is finished, the ProControl unit reverts to MANUAL mode. If any Shutdown process in the sequence fails (is not run after 60 seconds), then all the non-lamp outputs are immediately turned "OFF" and the unit reverts to MANUAL mode. The Shutdown sequence can be initiated either by the ProControl or ProView operator or by a process task (Process 5 does this in our example).

Process Capability

The ProControl runs process tasks which are based on Boolean IF ___ AND ___ THEN ___ logic. There are 64 available processes, 16 of which can be used as part of a startup sequence, and 16 of which can be used as part of a shutdown sequence. Each process can:

- be based on several, simultaneously existing I/O conditions
- include short or long delays for de-bouncing or simple time delay
- use memory variables (registers) for linking processes
- cycle outputs with timers or during certain times of the day
- perform system shutdowns

- send reports to fax and/or pagers

FYI

If you wish to modify the ProControl programming, please contact your Control System Integrator for assistance.

CHAPTER 3: ESTABLISHING COMMUNICATION

This chapter explains how to connect to the ProControl unit using ProView by local serial cable and by remote modem.

By itself, ProView does not reveal very much about your site's operation. It must be connected to the ProControl unit in order to yield any data.

Local Connection

To establish a local connection, perform the following:

1. Use the local serial cable supplied with the ProControl to connect the computer you are using to a ProControl unit. One end of the cable terminates with a female 9-pin connector. Use this end to plug into the serial port on your computer. The other end of the serial cable is terminated with a 9-pin RJ-45 "Ethernet" connector. Use this connector to plug into the "RS-232/Serial" port on the right hand side of the ProControl unit.

*Be sure to disconnect the serial cable from the ProControl unit after you are finished. If you do not, remote communications and alarm reporting will **not** be possible.*

If the ProControl unit is powered OFF for any reason, wait 45 seconds after power up before plugging in the cable to attempt a local connection. Otherwise, the ProControl's modem may not be properly configured.

2. Click on **Local Connection** in the **Communications** menu. You can also use ALT-C.

Or

Click on the **Local Connection** toolbar button.

You will see the **Local Communications** dialog box.

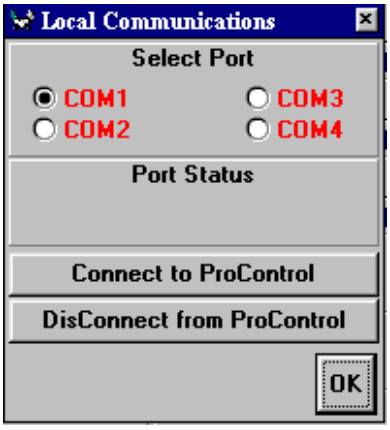

3. Select the COM port to which the ProControl is connected by clicking on the "radio button" next to the COM port you want to use. COM ports 1 through 4 are supported.

4. Click on the **Connect to ProControl** button.

5. You will see status messages in both the **Port Status** area of the **Local Communications** dialog box and in a small information box near the bottom of the main screen. Usually you will see "Trying Local..." followed by "LOCAL CONNECT" if the attempt is successful. If the attempt is unsuccessful you will see message boxes outlining the suspected problem.

6. After connecting, click on the **OK** button to hide the **Local Communications** dialog box.

After establishing a local connection, ProView will perform an initial scan of site conditions. This will take a few moments during which time the mouse pointer will turn into an hourglass. After the initial scan, data will be updated on the screen every second or so.

Here is a view of the main screen after a local connection has been established:

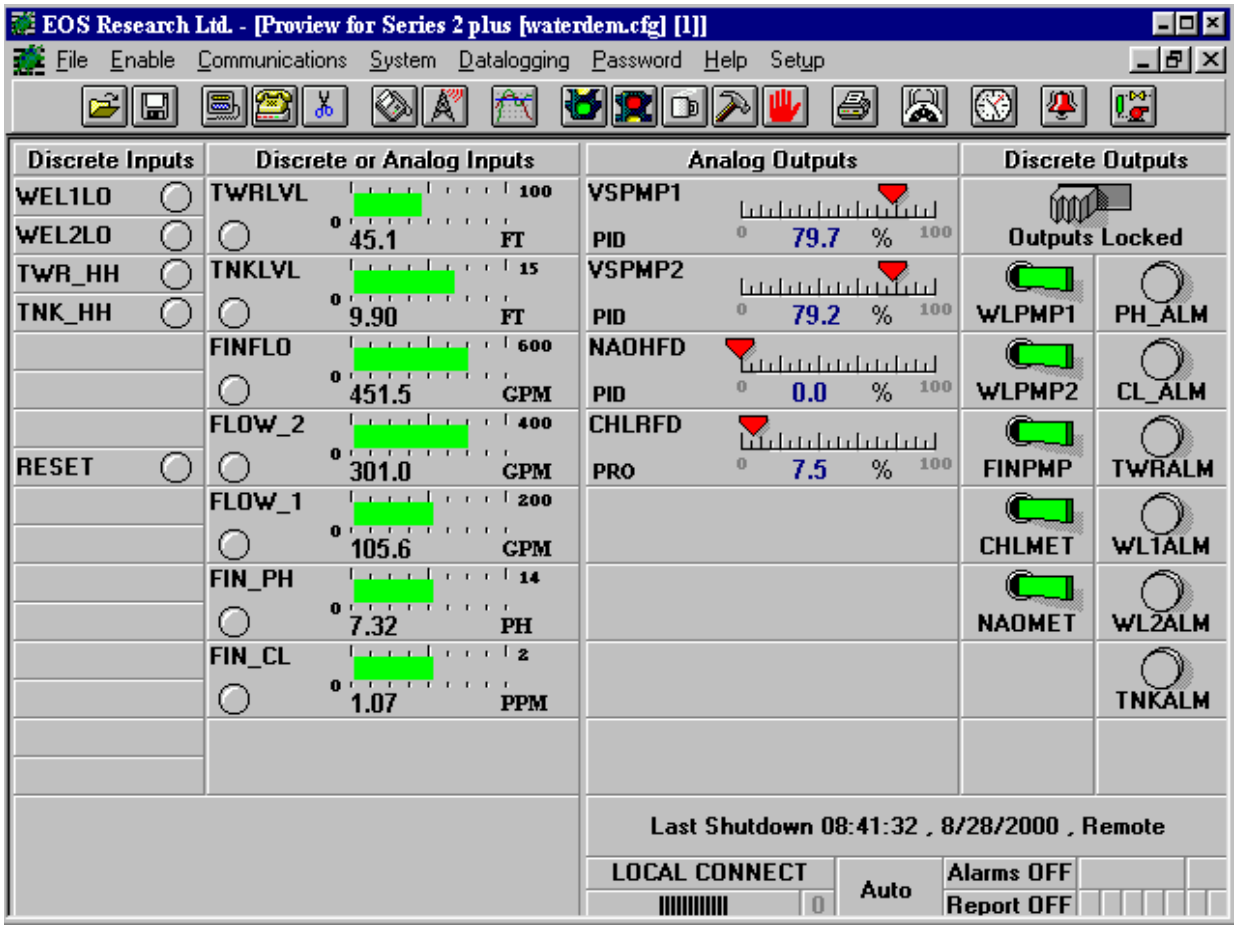

Note that the screen has been updated to reflect the current operating conditions at the site. At the bottom of the screen, various message panels have been filled in as well.

Remote Connection

For a remote connection, the procedure is a little different. Follow these steps:

1. Make sure that your modem has been installed properly and that the phone line is plugged in to the proper port on the modem.

Your modem must be Hayes (AT) compatible and capable of operation at 9600 baud.

2. Click on **Remote Connection** in the **Communications** menu. You can also use ALT-C.

Or

Click on the **Remote Connection** toolbar button.

You will see the **Remote Communications** dialog box.

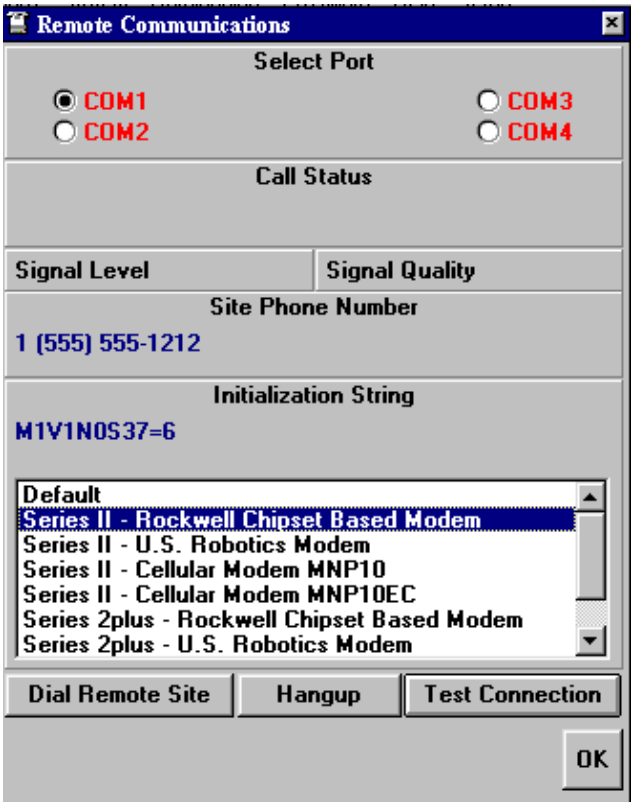

3. Select the COM port to which your modem is connected by clicking on the "radio button" next to the COM port you want to use. COM ports 1 through 4 are supported.

4. Check to see that the **Site Phone Number** is the one you want to dial. If not, click on the phone number and change it. If you need to dial an 8, 9 or some other prefix first to get an outside line, add

a comma or two after the prefix to obtain a pause before dialing the main number (e.g., 8,555-1212). Do not add parentheses or dashes.

5. Examine the **Initialization String** to see if it is correct for your type of modem. For Series 2*plus* systems, you will usually use the **Initialization String** for Rockwell Chipset or U.S. Robotics modems. If these do not work, use the Default string instead.

6. Click on the **Dial Remote Site** button.

7. You will see status messages in both the **Call Status** area of the **Remote Communications** dialog box and in the lower portion of the main screen. Usually you will see the following messages:

Trying Remote...	ProView is attempting to contact your PC's modem
OK	ProView has successfully connected to the modem
Setup...	ProView is sending the initialization string to the modem
Dialing...	ProView is dialing the site phone number
CONNECT 9600	Connection has been established with the remote modem
REMOTE CONNECT	Connection has been established with the remote ProControl unit

8. If the attempt is unsuccessful you will see message boxes outlining the suspected problem.

9. After connecting, click on the **OK** button to hide the **Local Communications** dialog box.

Ending a Connection

The simplest way to end a connection, to hang up in essence, is to click on the **Disconnect** button on the Toolbar. This works for either a local or remote connection.

Alternatively, you can re-open the **Local** or **Remote Communications** dialog box and click on either the **Disconnect from ProControl** button (Local) or the **Hangup** button (Remote). After ending the connection, you should see **NOT CONNECTED** in a message box near the bottom of the screen.

Sending a Memo

A useful feature of the ProControl is the ability to transmit short memos to a site operator. From ProView, you can send a message of up to 160 characters to the display of the ProControl unit. The site operator must acknowledge your memo before returning to his normal display. This feature is useful in communicating with a person at the remote site while the phone line is in use for a connection to the ProControl.

To send a memo, follow these steps:

1. From the **Communications** menu, select **Send Memo**.

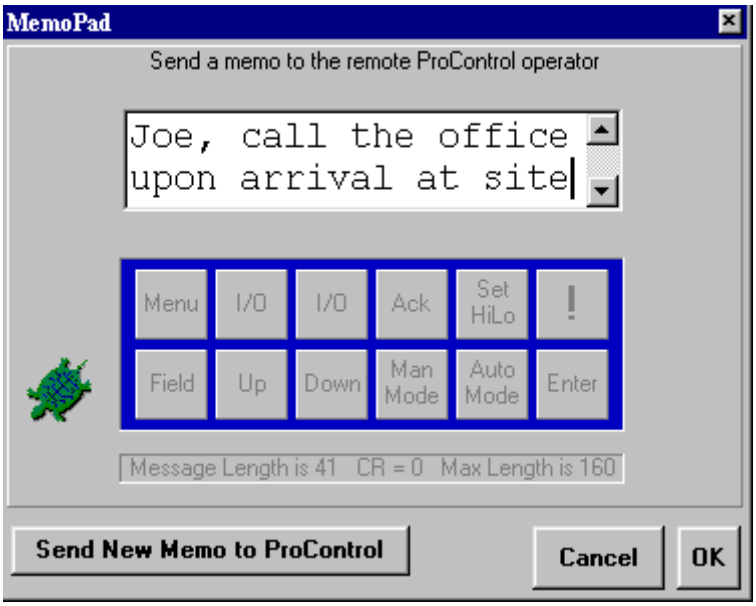

2. Type your memo onto the screen of the **MemoPad**. It will appear on the ProControl's display exactly as it appears to you on the MemoPad, two lines at a time. Words will automatically wrap around to the next line, but you may hit Enter (Carriage Return or CR) to jump to the next line if necessary. However, the fewer <CR> characters you use, the longer the text message you can type, since each <CR> represents 20 characters. The **Message Length** counter will keep track of the number of characters you have used. The **Max Length** counter will decrease to let you know how many more characters can be entered.

3. By clicking the right mouse button when the pointer is over the text window, the text window will become larger, allowing you to view more text without having to scroll up and down.

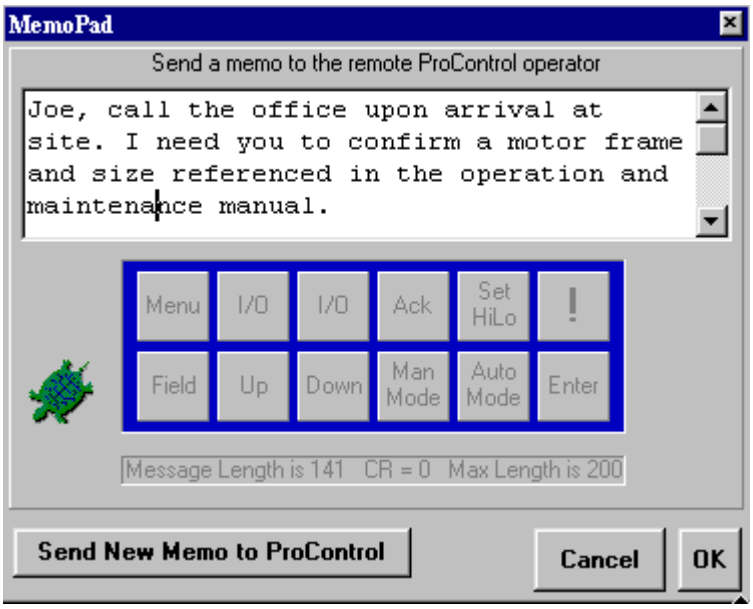

4. Click the **Send New Memo to ProControl** button to send the memo to the ProControl's display, **OK** to temporarily save the memo but not transmit it, or **Cancel** to abort the entire procedure.

5. The **Ack** button on the MemoPad will flash red and your PC will beep to indicate when the ProControl operator has acknowledged your memo.

CHAPTER 4: MANAGING YOUR SITE

This chapter explains how to change the way your ProControl system operates by switching between Manual and Automatic modes, initiating a startup or shutdown sequence, and changing other general system settings.

Switching Between System Modes

There are four modes of operation for the ProControl: Manual, Automatic, Startup and Shutdown. To initiate a switch to a different mode, simply click on the appropriate Toolbar button **Error! No topic specified.** or click on **Process Operations** in the **System** menu.

Goto AUTO Mode: Clicking on the coffee cup will place the ProControl into Automatic mode.

Goto MANUAL Mode: Clicking on the hammer will place the ProControl into Manual mode.

STARTUP System: Clicking on the green traffic light causes the ProControl to initiate a Startup sequence.

SHUTDOWN System: Clicking on the red traffic light causes the ProControl to initiate a Shutdown sequence.

Emergency OFF: Clicking on the red hand will cause an Emergency Shutdown, which turns off all outputs immediately and places the ProControl in Manual mode.

Be sure you understand the safety risks and other implications of issuing these commands. When the icons are clicked, the actions are ***immediate*** *and equipment may start up or shut down automatically.* ***Most importantly, switching the ProControl to Manual mode will defeat any safeguards programmed into the system and allow equipment to continue running without any process control.*** *Manual mode should only be used on a short-term basis for system troubleshooting or clearing alarm conditions, preferably with de-powered equipment circuits.*

You can monitor the current system mode by looking at the message panel at the bottom of the main screen.

Error! No topic specified. The system is currently in Manual mode.
Error! No topic specified. The system is currently in Auto mode.
Error! No topic specified. The system is currently in Startup mode, the last startup task run was startup task #2.
Error! No topic specified. The system is currently in Shutdown mode, the last shutdown task run was shutdown task #2.

The last action to initiate a Shutdown is listed in another message panel at the bottom of the screen. In the example below, the shutdown was initiated by a remote user.

System Operations

Following are several other operational parameters that can be set by ProView.

Date & Time

The ProControl unit maintains an internal real-time clock which it uses to time-stamp datalogged information and control other important system functions. To set the **Date & Time**:

1. Click on the **System Time** toolbar button.**Error! No topic specified.**

   Or

   Choose **System Operations** from the **System** menu and click **System Time**. You will see the **Date & Time** dialog box.

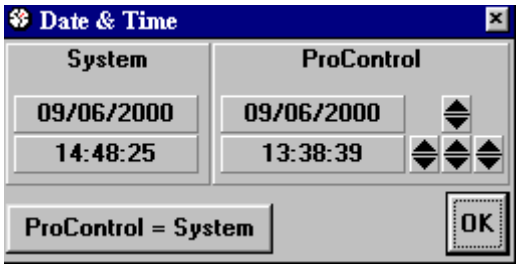

2. The left side of the dialog box displays the current date and time kept on your PC. The right side of the dialog box is the date and time according to the ProControl unit. Follow the procedure outlined below if you need to change the time.

3. To set the ProControl's clock equal to the PC's clock click on the **ProControl = System** button. To set the ProControl's clock to a specific time use the time spinners . The upper spinner changes the date and lower set of three spinners change the hour, minute and second (left to right, respectively).

4. To set your PC's time (System time) use the Windows Control Panel.

FYI

Daylight Savings Time is not supported by the ProControl's clock. You will need to make any necessary changes manually.

Changing the time by a large amount can lead to discontinuities in the datalogging history of your ProControl unit, particularly if you move the ProControl's time forward. See the section on Datalogging Setup in Chapter 5 to check on your system's datalogging status.

Alarms

An alarm is only an **audible** indication to the operator that an input signal is in its ***active state***. On the ProControl unit, the beeper sounds if the **Alarms** are **Set**, the unit is in Manual mode and an input is in the active state. The Alarm continues to sound until it either is acknowledged by the operator or times out by itself. In ProView, a "Beep" sounds from the PC if the **Alarms** are **Set**, and an input that has been configured as an **Alarm Input** enters the active state. No acknowledgment is necessary.

The current status of the alarm feature is displayed in a message box at the bottom of the main screen. **Error! No topic specified.**

To enable or disable Alarms, click on the **Alarms** toolbar button, which toggles this feature on and off.

Or

Click on **Set Alarms** in the **Enable** menu.

Remote Reporting

A report is a fax or a pager message sent by the ProControl unit. In order for any reporting to occur, **Remote Reporting** must be enabled. The current status of the reporting feature is indicated in a message box at the bottom of the main screen. **Error! No topic specified.**

To enable or disable remote reporting, click on **Remote Reporting** under the **Enable** menu. A check mark is displayed if reporting is enabled.

Log Off Remote User

This function is used occasionally to reset the remote ProControl's display to the password menu. It is often used to ensure that an on-site user does not change any ProControl settings while you are remotely connected, and to ensure that password protection is restored if the last user did not Log Off locally.

To Log Off the remote user, choose **System Operations** from the **Systems** menu, and click on **Log Off Remote User**.

Initiate FAX NOW!

This function is the equivalent of pressing FAX NOW on the ProControl unit. It is used to generate and send a current fax status report to the currently enabled fax numbers. Fax reports must be enabled in the **FAX Report Setup** dialog box and ProView must be connected via modem (remotely) for this command to proceed.

ProView will disconnect from the ProControl unit (hang up) after issuing this command to free the remote phone line for fax use. Normal FAX back operations and times will not be affected.

To initiate the fax, choose **System Operations** from the **Systems** menu, and click on **Initiate FAX NOW!**

Initiate New FAX NOW!

This function is identical to **Initiate FAX NOW!** except that you can specify a number that is not currently enabled to receive faxes from the ProControl. You can use this for testing the fax capabilities or to send a fax update to a third party.

To initiate the fax, choose **System Operations** from the **Systems** menu, and click on **Initiate New FAX NOW!**

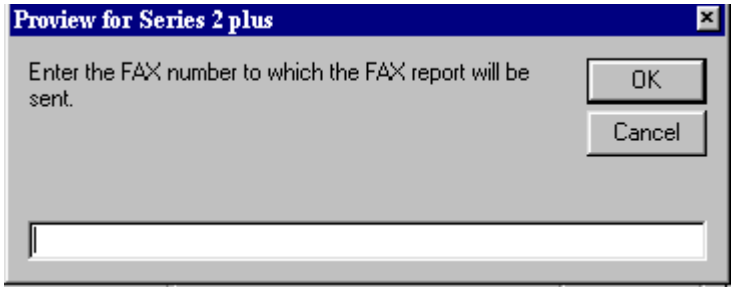

ProView will alert you first that you will be disconnected from the system in order for the fax to proceed. Enter the FAX number to which the fax report will be sent, making sure you include a prefix or the numeral 1 and the area code, if necessary. Click the OK button to send the fax report.

CHAPTER 5: CHANGING SYSTEM PARAMETERS

This chapter explains how to change the settings that govern much of the operation of your system, such as the state of a discrete output, analog alarm levels and fax and datalogging setups.

Switching an Output State

The state of a discrete output can be changed manually by clicking on the "switch" associated with its tagname. ProView includes a "locking" feature for discrete outputs as a safety measure to prevent inadvertent output changes; you must "unlock" the outputs in order to turn them on or off. The outputs are locked and unlocked by clicking on the "slide switch" at the top of the **Discrete Outputs** section of the main screen.

You should leave the slide switch in the **Locked** position whenever possible.

Bear in mind that if the ProControl unit is in Auto mode, any discrete output change you make may be "overridden" by a process control task. Do not turn outputs on or off unless you are familiar with the process control in effect for your system.

1.

To change the state of a discrete output, click on the toggle switch.

2.

The toggle switch will change positions, and a "?" will appear for a moment after the tagname. This indicates that the command was sent to the ProControl unit but that confirmation of the state change has not yet been received.

3.

The "?" will disappear after confirmation of the state change has been received from the ProControl unit.

Depending on your site configuration, you may be able to change certain parameters that affect how the discrete outputs in your system operate in Auto mode.

Process Groups

The ability to set a ***Process Group*** is a rarely-used feature that prevents an individual output from being switched by certain process tasks when in Auto mode. If your ProControl has been configured for Process Groups, you can switch between Group 1 (ignore processes 17 – 32) and Group 2 (ignore processes 1 – 16).

Do NOT enable process groups unless your ProControl has been configured specifically to use this feature! *Be sure you understand the safety risks and other implications of issuing these commands.*

Output Cycle

Some of your outputs may have been configured as "Switched" outputs, where the output is turned on and off according to a timed cycle, or during a specific time of day.

Output Options

To change an output option, do the following:

1. Place your mouse pointer over the output's tagname until a balloon appears. Click the *right* mouse button until you see **Output Options**.

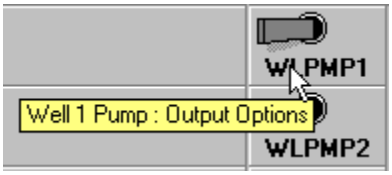

2. Click the *left* mouse button.

3. You will see the **Set Output Options** dialog box. The **Set Process** or **Set Output Cycle** panels may not be visible if those options do not apply. Both panels will be disabled if ProView is not connected to a ProControl unit.

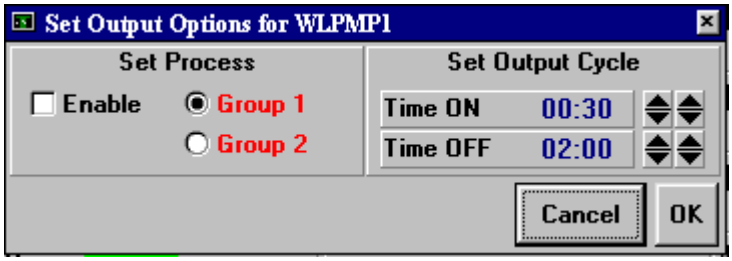

4. To enable a Process Group click on the **Enable** check box and click either the **Group 1** or **Group 2** radio buttons in the **Set Process** panel. Once again, ***Do NOT enable process groups unless your ProControl has been configured specifically to use this feature!***

5. If the output has been configured to run in a switched mode, you will be able to change the **Output Cycle** times by clicking on the value you want to change and entering the new time in an **hours:minutes** format (be sure to hit Enter after you type in the new time). Alternatively, click on the up or down spinners to increase or decrease the time you want to change.

6. Click on the **OK** button to confirm the changes and send them to the ProControl unit. Click on **Cancel** to get rid of any changes.

Notes

Each I/O point can have its own set of associated ***Notes***. The notes are stored on your PC in a file with a **.not** extension along with your **.pvs** file. You can attach notes which explain the functional purpose of the I/O point or define the I/O point in more detail. This can eliminate uncertainty that may result from the limitation of six characters in each point's tagname.

To edit an I/O point's notes do the following:

1. Position the mouse pointer over the I/O point's tagname until a balloon appears, and *right*-click until you see **Notes**.

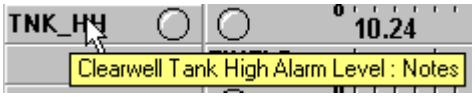

2. Click the left mouse button to enter the "Notes" feature. The **Notepad** dialog box appears.

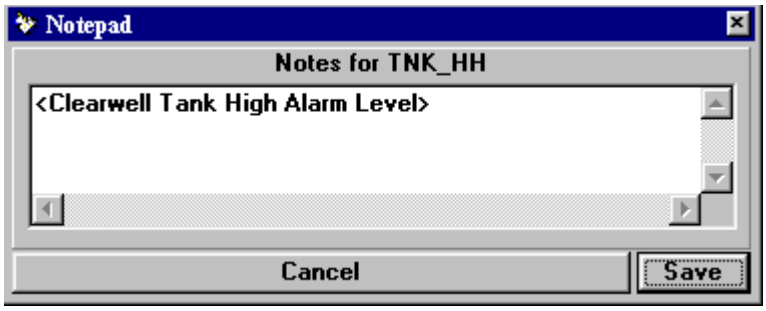

3. Click in the **Notes** window to edit or add descriptive text. Any notes enclosed in angle-brackets (i.e. <note>) will appear within the balloon when you position the mouse pointer over the tagname, and at the top of the main screen.

4. Click the **Save** button to save your notes and/or definitions or press **Cancel** to exit without saving. You must also save the site file before exiting ProView to retain any changes made in Notes.

FYI

Sometimes it is a good idea to provide a more complete description of what an input or output does in the Notes; e.g., "Causes System Shutdown" or "Turns ON when Tank is Full". Feel free to customize the notes to suit your purposes; they are stored locally on your PC and do not affect the operation of the ProControl itself.

Analog Alarm Levels

The analog alarm levels define what parts of an analog input's range are considered "active" and which are not. This affects not only the color of LED's and bar graphs on the main screen but also can affect process control if the analog input is used in a process task. Depending on how your system has been configured, you

will be able to set up to four "activation levels" that define when an input becomes active. Some ProControl configurations allow you to set a ***Low Alarm Limit*** and a ***High Alarm Limit***, while others allow you to additionally define a ***Low-Low Alarm Limit*** and a ***High-High Alarm Limit***. These activation levels are somewhat more flexible in use than their names imply, in that they are not only used to trigger alarms. If an alarm limit value is exceeded, it could be used to simply turn on a pump or reset a switch, for example.

To set an analog alarm level, do the following:

1. Position the mouse pointer over the I/O point's tagname until a balloon appears, *right*-click until you see **Alarm Levels**.

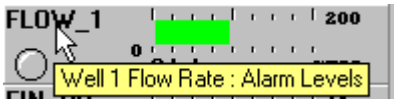

2. Left-click and the **Alarm Levels** dialog box appears.

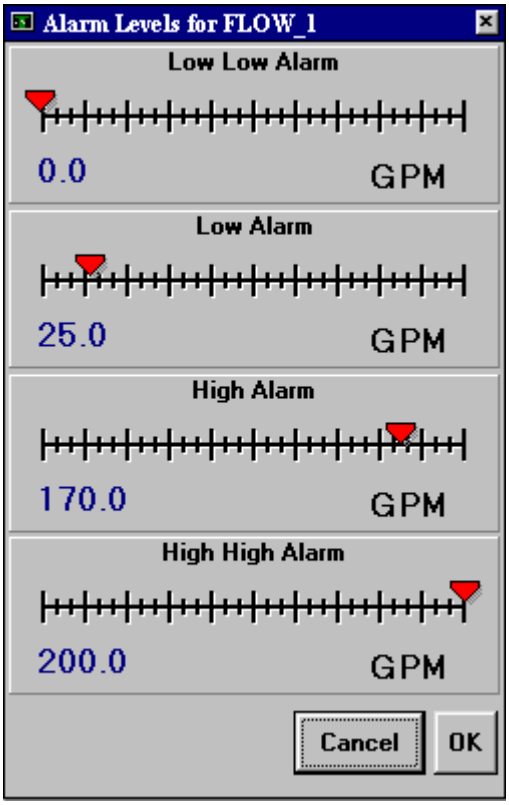

3. The present alarm levels are shown in text as well as in the position of the sliders. Note that the **High Alarm** value must be greater than the **Low Alarm** value, and the **High High Alarm** value must be greater than the **Low Low Alarm** value.

4. You may adjust the alarm values by clicking and holding a red slider and moving it to the left or right. As you move the slider the numeric value is updated to reflect the change you are making. The alarm level will be set to a new value when you release the mouse button.

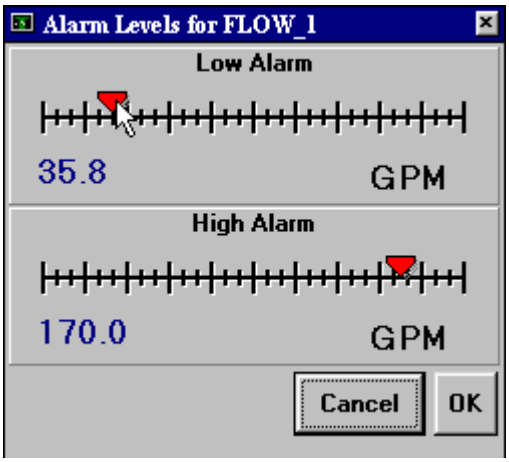

5. Alternatively, you may click on the alarm level text and edit the value for the alarm level. This is usually a better way to input a precise value. Be sure to hit the Enter key to send the new value to the ProControl unit. Click on the **OK** button to hide the **Alarm Levels** dialog box.

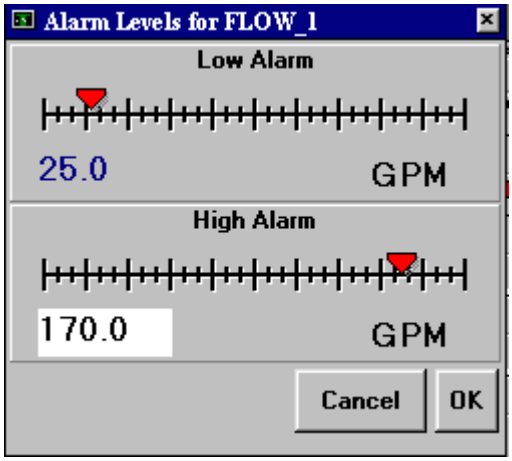

! *Remember that any changes you make to the alarm levels are **immediate** and may impact the process control for your system. Be sure you understand the safety risks and other implications of issuing these commands.*

Site Information

Site Information refers to data used in the fax report and in the various files printed by ProView.

To view or change the Site Information do the following:

1. Click on **Site Information** in the **File** menu. The **Site Information** dialog box appears.

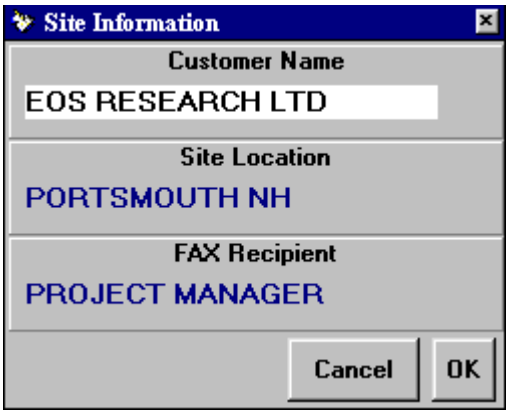

2. To change the **Customer Name**, **Site Location** or **FAX Recipient** click on the text you want to change and edit it. Only uppercase letters, numbers and blank spaces are allowed. The **Customer Name** field also appears on the main screen of the ProControl unit's display.

3. Click on the **OK** button to confirm the changes and send them to the ProControl unit. Click on **Cancel** to get rid of any changes.

FAX Report Setup

This setup screen is used to change when and where the ProControl's fax report is sent, and whether individual fax recipients are enabled.

To view or change the FAX Report Setup, do the following:

1. Click on **FAX Report Setup** in the **Communications** menu.

Or

Click on the **FAX Report Setup** toolbar button. You will see the **FAX Report Setup** dialog box.

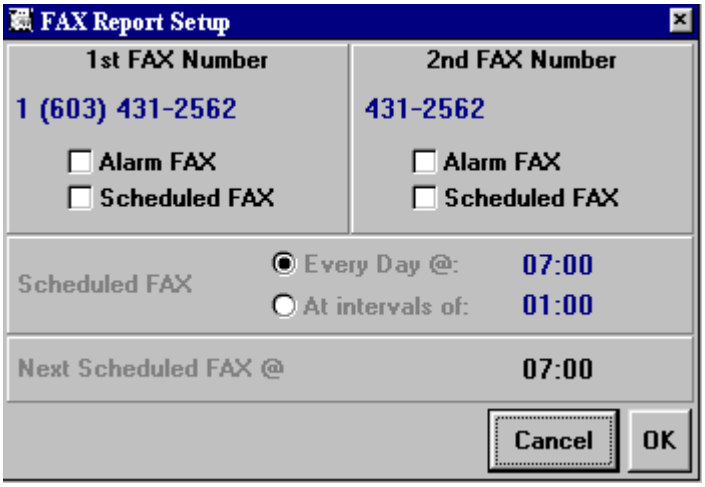

2. If **Remote Reporting** is not enabled, the contents of the dialog box will appear "grayed out" or disabled.

3. The first and second FAX number panels determine what kinds of fax reports are sent by the ProControl unit and where they will be delivered. There are two kinds of fax reports generated by the ProControl. A **Scheduled FAX** report occurs on a regular basis to provide a status report, while an **Alarm FAX** report will be sent when issued by a Process Task that has been configured to do so (usually to report an alarm condition). To enable either type of fax report click on the **Alarm FAX** or **Scheduled FAX** check boxes. If you enable Scheduled FAX reports the Alarm FAX reports for that same number are automatically enabled as well. You cannot enable only Scheduled FAX reports.

4. To change the phone number to which the ProControl will fax reports click on the phone number and edit it. The ProControl can fax to two different phone numbers. It will make up to three attempts to send the fax. If the first try is unsuccessful, the second try will be initiated 5 minutes later, and a third attempt will be made 5 minutes after that. If the third try is unsuccessful the fax attempt will be abandoned and the ProControl will enter a fax failure into the Events log (see Chapter 6). The ProControl will try both phone numbers (if they are both enabled) on the first try before moving on to a second attempt.

5. In the **Scheduled FAX** panel, you can select when the regularly scheduled faxes are sent. Choose the **Every Day @** button and edit the time to the right of it to have a report sent at the same time every day (24-hour clock). To have a report sent at a specific time *interval*, choose the **At intervals of** button and enter the time interval in HH:MM format. When you hit Enter, the data will be sent to the ProControl unit.

6. The **Next Scheduled FAX** variable indicates when the next *scheduled* fax report will be sent. You can also change it yourself if, for instance, the ProControl is set to fax every hour but you would like it to skip a few hours before resuming. To set the **Next Scheduled FAX** time click on the time in that panel and enter the new time in 24 hour format. Note that if you enter a Next Scheduled FAX time that is earlier than the current time as determined by the ProControl's clock, you will prevent any scheduled faxes from being sent until the next day at that time.

7. Click on the **OK** button to confirm the changes and send them to the ProControl unit.

Paging Setup

This setup screen is used to change where the ProControl's alarm pager messages are sent, and whether individual page recipients are enabled. You will need to contact your paging service directly to obtain some of the information necessary for proper paging setup. The paging capability is similar to the ProControl's fax capability in that you can send information to two pagers and it will make three attempts at reaching each number.

You will need to obtain your pager company's modem dial-up phone number and your pager's modem dial-up ID (this is often different than your regular pager ID). This information is generally not available from the customer service staff at the pager company. You may need to ask for someone in technical support who is familiar with pager modem dial-up.

To view or change the **Paging Setup** do the following:

1. Click on **Paging Setup** in the **Communications** menu.

   Or

   Click on the **Paging Setup** toolbar button. You will see the **Pager Setup** dialog box.

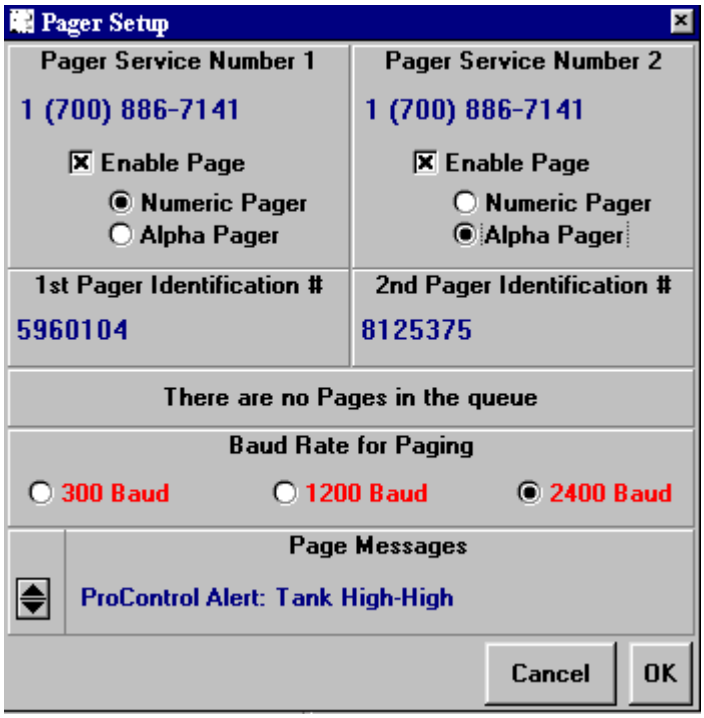

2. In the **Pager Service Number** panels, enter the telephone number for your pager company's modem dial-up.

3. Click on the **Enable Page** check box, and choose **Numeric Pager** or **Alpha Pager** (text).

4. Enter the pager ID number you obtained from the pager company in the **Pager Identification #** panels.

5. The next panel indicates whether there are any queued pages. In other words, if a page has not yet been successfully completed and you have dialed into the ProControl with ProView, you may be interfering with the ProControl's attempts to send a page.

6. Select the baud rate in the **Baud Rate for Paging** panel, which is the speed at which the page information is sent to your paging company. It is generally recommended that you use 300 baud for the greatest reliability. Even at 300 baud, the ProControl takes only a few seconds to transmit the information to your pager company.

7. The **Pager Message** field allows you to view and/or change the information which will be transmitted to your pager from specific events. If you are using a numeric pager, this message cannot exceed nineteen digits in length and may contain only numerals. If you are using an alphanumeric pager, this message can be up to 80 characters in length. After you edit the message, hit Enter to send the updated message to the ProControl unit. Use the up and down spinners to view the other Process Tasks that cause pages to be sent. You should be familiar with the process control of your system before attempting to make changes to these messages.

8. Once you have finished making your changes click **OK** to close the dialog box.

Datalogging Setup

There are three different types of datalogging on the ProControl. Discrete input and output changes are logged as they happen. Events are also logged as they happen, and include changes in control mode (e.g., Auto, Manual), local and remote connections to the ProControl, system startup/shutdowns, fax or page failures, and execution of *Process Tasks*. Analog input and output values are logged at specific time intervals determined by the user. The **Datalogging Setup** dialog box is used to determine how datalogging is carried out in the ProControl unit.

To view or change the **Datalogging Setup** do the following:

1. Click on **Datalogging Setup** in the **Datalogging** menu.

Or

Click on the **Datalogging Setup** toolbar button. You will see the **Datalogging Setup** dialog box.

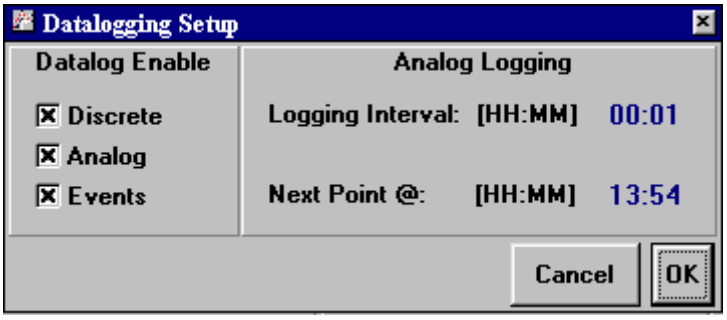

2. To enable a type of datalogging click on the **Discrete**, **Analog** or **Event** check boxes located in the **Datalog Enable** panel.

3. To change the logging interval for analog inputs click on the time value indicated for **Logging Interval** and edit it. This interval can range from 1 second to 24 hours, expressed in minute/second

format or hour/minute format (default). Clicking on the **HH:MM** adjacent to the **Logging Interval** will toggle between hour/minute format and minute/second format.

4. The **Next Point @** variable is set by the ProControl every time a data point is logged to show you when the next analog data points will be logged. You can change this value if you wish the ProControl to delay before resuming analog datalogging. Click on the time associated with **Next Point @** and enter the new time in either HH:MM or MM:SS format. Note that if you enter a **Next Point @** time that is earlier than the current time *as determined by the ProControl's clock*, you will prevent any analog datalogging from occurring until the next day at that time (or next hour if using MM:SS format).

4. Once you have finished making your changes click **OK** to close the dialog box.

FYI

When setting your analog logging interval, be aware of the available memory in the ProControl unit you are using. If, for instance, your ProControl has a capacity of 5,000 analog data points per input channel and you specify a 5-minute logging interval, there will be available memory for approximately 17 days worth of analog data. Changing the log interval to 10 minutes will make the memory last twice that long. Once the memory is full, the oldest data is purged to make room for the current data.

Changing the Password

You can change the password for opening a site file in ProView or for access to the ProControl unit from its keypad. The passwords do not have to be the same. If you change the password while ProView is connected to a ProControl unit, the new password will be used for both ProView and the ProControl unit. If you change the password while not connected to a ProControl unit, the new password will be used only for that site file in ProView. In order to save the new password for the site file in ProView, you must save the site file (**File…Save Site**). However, any change to the password in the ProControl unit itself is immediate.

To change the password, follow these steps:

1. Click on the **Password** menu.

Or

Click on the **Password** toolbar button. You will see the **Security** dialog box.

2. Click on the **Change Password** button. You will prompted to enter the **Old Password** in the text box. Click the **OK** button or hit the enter key. If you do not enter the password correctly, a beep sounds and the security dialog box disappears.

3. You will then be prompted to enter the **New Password** in the text box. Recall that the password can be up to three characters consisting of the numbers 0-9 and the letters A-Z. After clicking on the **OK** button or hitting the enter key, you will be prompted for the new password again.

4. If both new password attempts were identical, the new password will be accepted and the **Security** dialog box will disappear. If ProView is connected to the ProControl, the new password will be in effect for both ProView and the ProControl unit.

Analog Output Options

If your ProControl system is configured with analog outputs, you will be able to adjust the output level, or the parameters used in a control algorithm associated with that output. Your system integrator should have already configured your analog outputs with these algorithms if they apply to your process. Analog outputs can be involved in one of two different types of control scheme: **PID** or **Proportional** control. A **PID** (Proportional-Integral-Derivative) Loop is a feedback-based loop that maintains an analog input at a user-defined ***Setpoint***. The ProControl automatically adjusts the analog output using a mathematical formula that includes ***Gains*** for the proportional, integral and derivative terms. PID control is a commonly-used process control technique, descriptions of which can be found in most control theory texts.

FYI

If you are familiar with PID control terms, note that the PID gains used by the ProControl are defined differently than some of the terms in traditional use. **Proportional Gain** *on the ProControl corresponds with the classic definition of* **proportional band**. *However, the* **Integral Gain** *and* **Derivative Gain** *are the* ***inverse*** *of* **integral (or reset) time** *and* **derivative time**. *Hence, an* ***increase*** *in any of these gains tends to* ***increase*** *the corresponding proportional, integral and derivative action.*

A **PRO** (Open-loop Proportional) algorithm generates an analog output signal that is directly proportional to the value of an analog input. The analog output percentage is computed by multiplying a constant of proportionality by the associated input's percentage of full-scale.

If a control scheme is not assigned to an analog output (or if the output has been placed in **Manual** mode), you can change the output value by clicking on the slider for that output and dragging it up or down, or by highlighting the number beneath the slider scale and typing a new value.

You can modify the PID parameters of a PID-controlled analog output (the **P**, **I** and **D Gains**) if your analog output is not responding smoothly or quickly enough to changes in its associated input. The proportional (**P**) gain specifies the output level based on the error between the **Set Point** (desired input level) and the actual input level. Integral (**I**) gain smoothes the output level based on the tracking history of the input to the **Set Point** and provides a means of better steady state control. Derivative (**D**) gain will allow the output to respond to quick changes in the input and provides a means of establishing good transient or instantaneous control.

In the case of a **PRO** output, you can modify the **P Gain** to alter how much the output value changes as the associated input changes. A value of 100 indicates that the output will be 100% when the input is at full scale. A value of 50 indicates that the output will be 50% when the input is at full scale

The **Max Change** parameter allows you to regulate how much the analog output can change in one control cycle (one control cycle is about 1/4 of a second).

! *Be sure you fully understand PID and proportional control concepts before adjusting any of these parameters. Large changes in output can result from changing the gains or the set point, which can cause equipment damage or unforeseen safety hazards. For help in choosing appropriate gains for your process, contact EOS Research technical support.*

To change the **PRO** or **PID** parameters, **Set Point**, or **Max Change** parameters:

1. It is highly recommended to first place your analog output into **Manual** mode. Click on the **PID** (or **PRO**) beneath the Tagname and wait a second for it to change to **Manual**.

2. Position the mouse pointer over the analog output's tagname until a balloon appears, and *right*-click until you see **PID Options**.

3. Left-click and the **PID Parameters** dialog box appears.

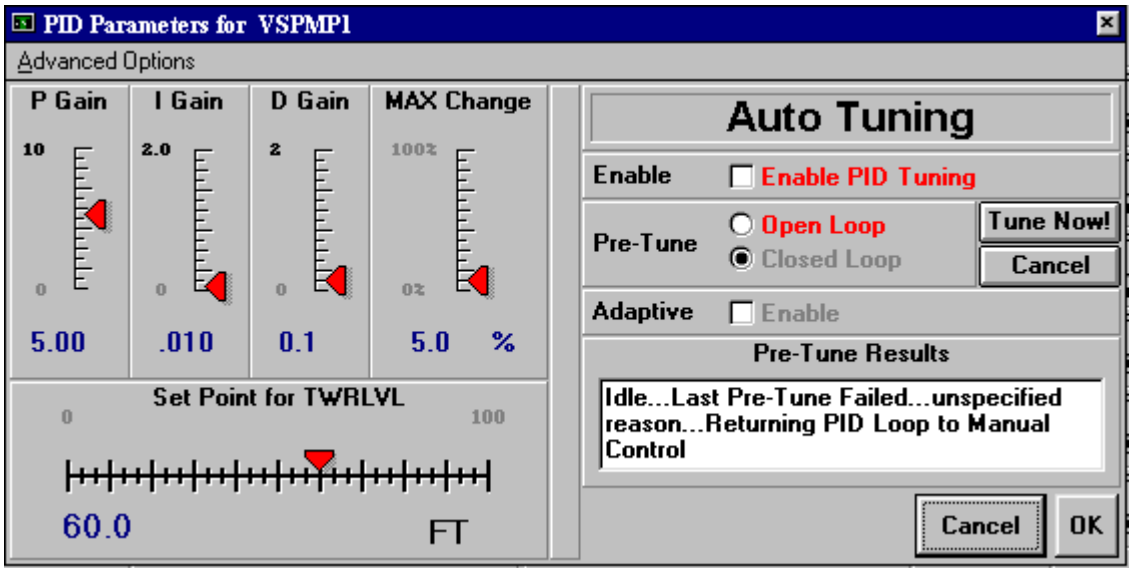

4. To change any of these parameters, you can either click and drag the sliding scale or click the numerical text and enter the value through the keyboard. You can also change the upper limit on all of the gain scales.

5. Click the **OK** button to save your changes. If not, click the **Cancel** button.

6. To restart your PID loop, click the word **Manual** underneath the Tagname and wait a second for it to change to **PID**. Your new parameters are now in use by the ProControl.

One type of auto-tuning algorithm is provided with ProView, and can be used to calculate optimal PID parameters for certain types of process loops. Contact EOS Research technical support to see if auto-tuning may benefit your process.

If the analog output is configured for proportional output, the dialog box on the right will be displayed. You can make changes as outlined above.

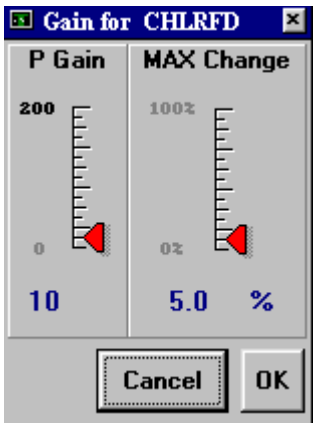

Process and Instrumentation Diagram

The **P&ID** option allows you to pull up an alternate "process and instrumentation diagram" representation of your system, which can be used to display operating data that is superimposed on a process diagram (or map, or picture of your dog, etc.). The P&ID option is designed to provide an alternate human-machine interface (HMI) for ProView with customizable graphics. Note that the P&ID screen is not interactive like the main ProView screen is; that is, data can be displayed on this screen, but commands cannot be issued from it.

Typically, your system integrator would configure this screen for you. The P&ID capability must be enabled by the integrator in order for you to use this feature. If this option has been included in your system configuration, you can view this diagram by clicking on the P & ID icon .

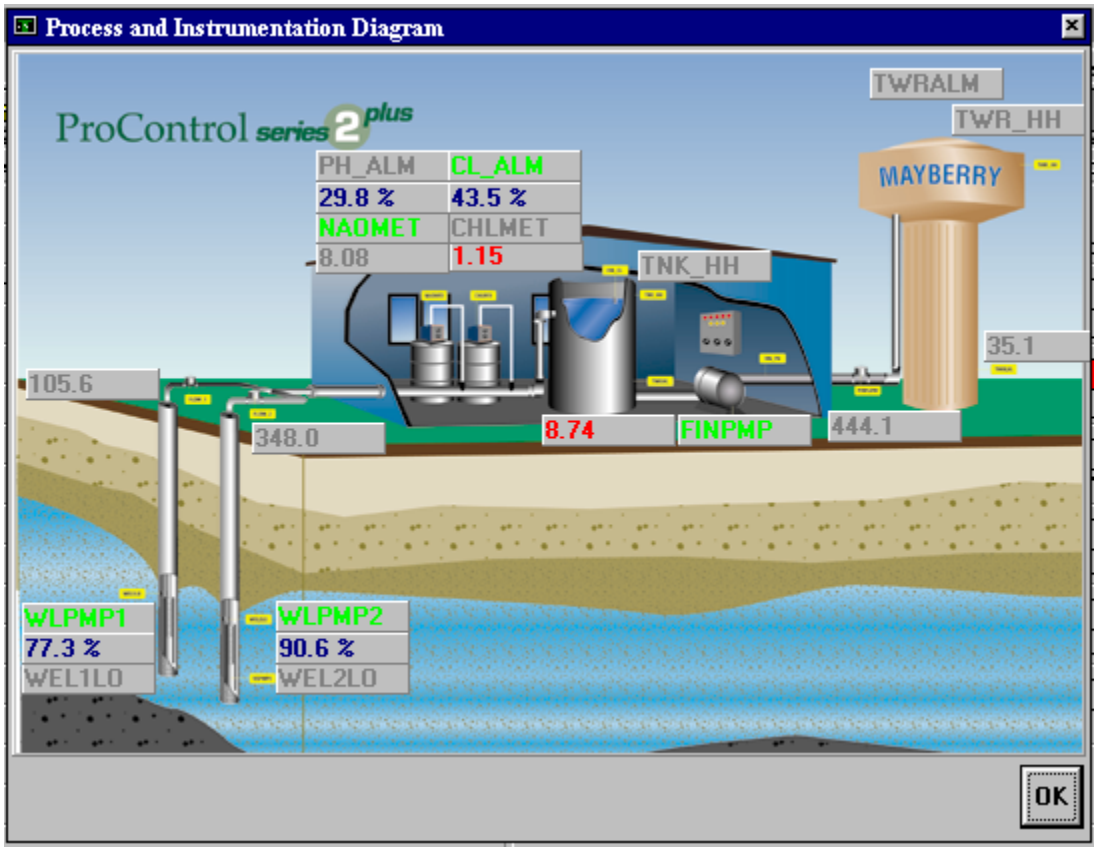

The **Process and Instrumentation Diagram** contains a graphical representation of your system. Digital inputs and outputs are displayed as tagname boxes that change color when the I/O point is active (red or green). Analog I/O are displayed as numerical values, with analog outputs also containing the **%** symbol to distinguish them from analog inputs. Click the **OK** button to go back to the main ProView screen.

As discussed above, the P&ID screen is typically supplied by your system integrator. However, if you would like to make changes to the P&ID screen, follow the procedures outlined below. If you want to change the background image, you can create a new **.pid** file. The P&ID must be a bitmap format file (.bmp) that can be

created with Paintbrush™ or other drawing programs. The bitmap image can be any size you choose, the file name must be the same as your ProView site file (**.pvs**) with the filename extension changed to **.pid**, and it must be placed in the same folder as your .pvs file.

When you open the P&ID screen in ProView, you can move or remove the I/O boxes as you choose. Remember to **Save** the site file before you exit ProView to store these changes.

To change the appearance of the P & ID:

1. To move a descriptive box containing either a tagname or value, hold the shift key and click the left mouse button when positioned on the appropriate box. This will enable you to drag and re-position the box wherever you choose.
2. To remove a descriptive box, double-click on the box. Once you have removed a box, it will no longer be available to you unless you restore all boxes.
3. To restore all descriptive boxes, position the mouse at the bottom of the P & ID window in the gray area. Then hold down the control and shift keys while simultaneously clicking the left mouse button.

CHAPTER 6: WORKING WITH LOGGED DATA

This chapter explains how to gather and analyze logged data that is being stored in the ProControl unit's battery-backed memory.

Hour Meters

The ProControl maintains **Hour Meters** for inputs and outputs to indicate how long the I/O point has been ON and OFF. The hour meters are particularly useful in keeping track of equipment "run" times (discrete outputs), but are also maintained for discrete and analog inputs. For analog inputs, the hour meters indicate the time the input has been in and out of its *Active State* (see the definition of Active State in the Series 2^{plus} User Manual). The hour meters are updated every second on the ProControl unit. The ON and OFF times are displayed at a resolution of 1/10 (0.1) of a minute.

To read the Hour Meters, follow these steps:

1. Position the mouse pointer over the I/O point's tagname until a balloon appears, then *right*-click until you see **Hour Meter**.

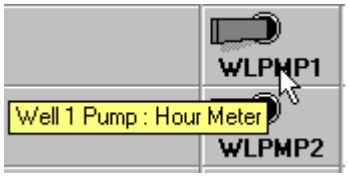

2. Click the left mouse button to view the hour meter. The **Hour Meter** dialog box appears.

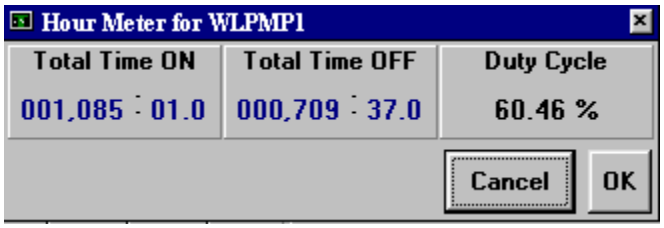

3. The **Hour Meter** box displays information in the form of **Hours : Minutes.10th Minutes** for both ON time and OFF time. The **Duty Cycle** or ratio of ON time to total time is also displayed. It may take a few seconds for the display to be updated once the dialog box appears.

4. To edit the **Total Time ON** or **Total Time OFF**, click and highlight the total time text and make the required changes. Press the enter key to confirm the changes and send the new value to the ProControl unit. Resetting the time values to zero, for instance, can be used when a motor is changed out, to keep track of lubrication intervals, etc.

5. Click on the **OK** button to close the **Hour Meter** dialog box.

Totalizers

If your site configuration includes an analog input to which a flow meter or pulse counter is connected, it may also include a **Totalizer**. Totalizers provide the ability to view the cumulative total of a flow-based input or accumulated pulses from a counting device.

To view the **Totalizer** do the following:

1. Position the mouse pointer over the I/O point's tagname until a balloon appears, then *right*-click until you see **Totalizer**.

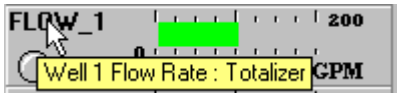

2. Click the left mouse button to view the totalizer. The **Totalizer** dialog box appears.

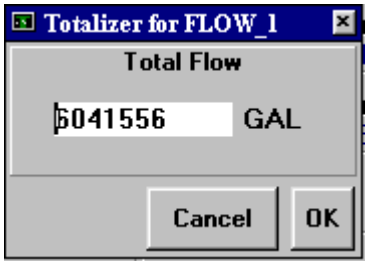

3. The **Total Flow** for this input since the totalizer was last reset is displayed. It is updated every second while the dialog box is visible and while ProView is connected to the ProControl unit.

4. If you would like to set the totalizer to a different value, click on the value displayed in the dialog box. Enter the new value for the totalizer and press the enter key.

5. Click on the **OK** button to close the **Totalizer** dialog box.

Trend Graphing

ProView can display a real-time trend graph while you are connected either locally or remotely to the ProControl. A 5-minute trend can be displayed in the lower left hand side of the ProView window.

To start trend graphing:

1. Position the mouse pointer over an analog input's tagname until a balloon appears, then *right*-click until you see **Trend**.

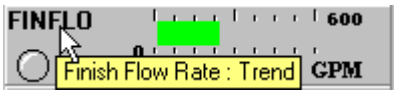

2. Click the left mouse button to produce the **Trend** window for that input.

3. The trend window provides a 5-minute history of the real-time data for that analog input. You will see the trend "drift" from right to left across the window, and it will be updated as long as you are connected to the ProControl. If you wish to observe another trend, click on the tagname of another analog input and the trend window will be refreshed with the new data.

4. To stop trending and empty the trend window, click on the **Trend for…** text block in the trend panel.

Downloading Logged Data

Operations data is stored electronically in the ProControl's memory in accordance with the datalogging setup (Chapter 5). To view the logged data, click on **Get Logged Data** in the **Datalogging** menu. This opens the **Extract Datalogged Information** dialog box.

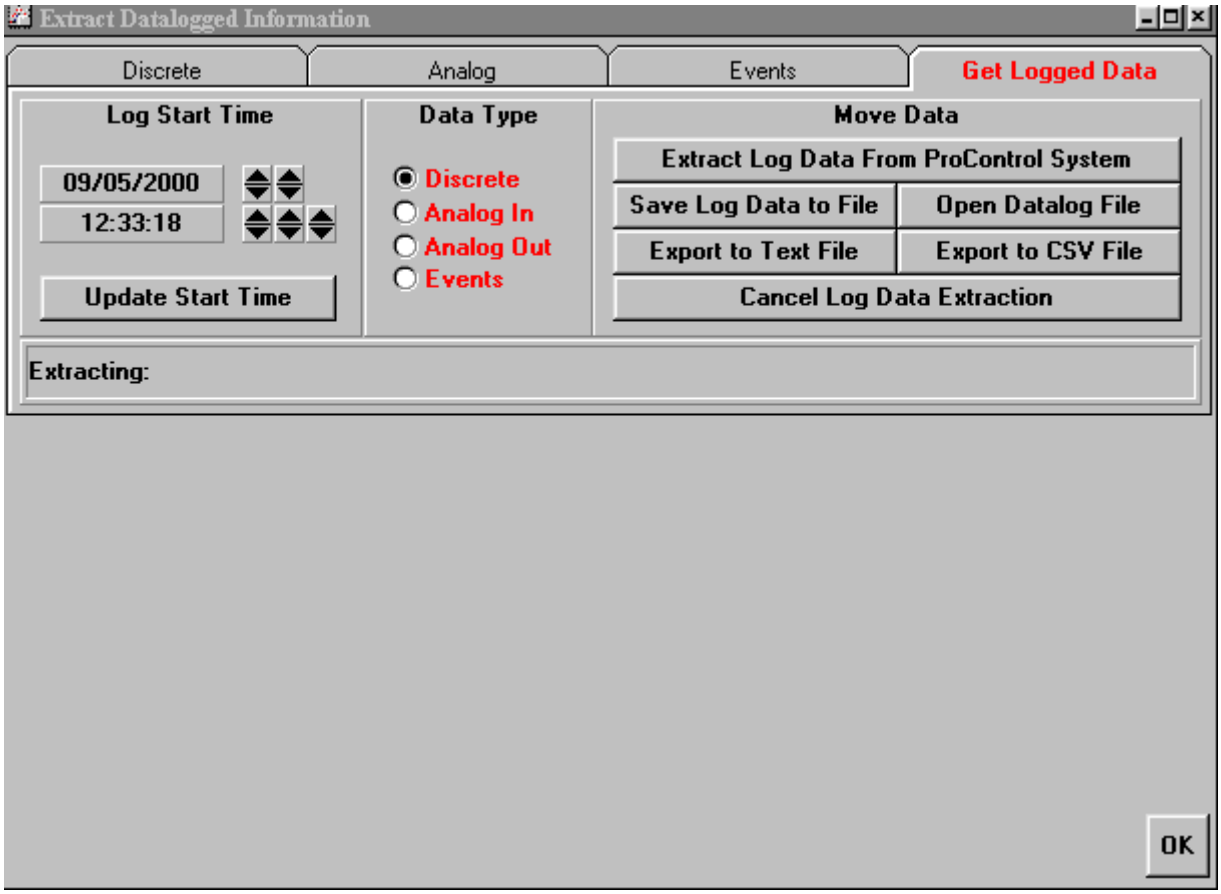

Getting Logged Data

To extract datalogged information from the ProControl unit, do the following:

1. Select the start time in the **Log Start Time** panel. ProView will extract all data that has been logged since this time. Change the start time by clicking on the spin buttons to increase or decrease the Month, Day, Hour, Minute or Second. Click on the **Update Start Time** button to reset the start time to the current time.

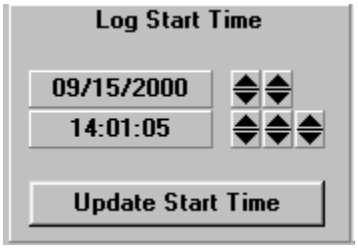

2. Select the type of data you wish to extract. Click on the **Discrete**, **Analog In**, **Analog Out** or **Events** radio button.

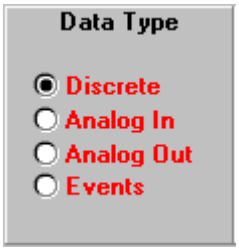

3. Click on the **Extract Log Data From ProControl System** button.

4. ProView performs a scan of available data. You can then monitor the progress of the data extraction.

5. A message box will appear when the data extraction process is complete.

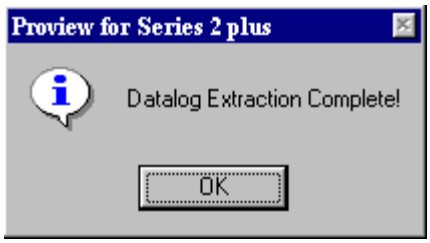

Looking at Discrete Data

To examine the discrete datalog record that you have extracted click on the **Discrete** tab.

The **Discrete** data window appears. On the left, the **Select I/O** list box contains a list of all enabled discrete inputs and outputs. In the middle is the **Discrete Data** record. On the right, the **Earliest Record** extracted is shown as 9:38:18 on 9/15/2000. The **Latest Record** is 13:44:50 on 9/15/2000. A total of 49 records were extracted. Clicking on **All** in the **Select I/O** list box will show the entire discrete record in the **Discrete Data** window. You can scroll through the discrete records in the window.

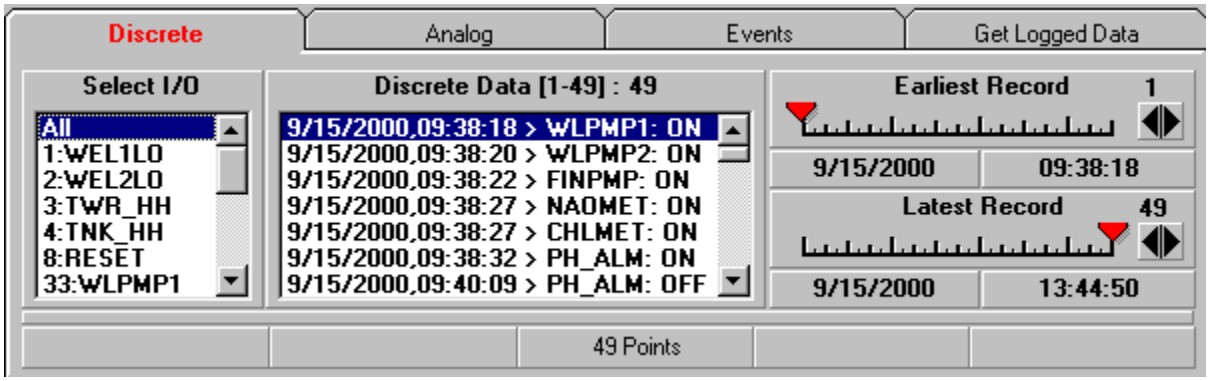

The **Select I/O** list box can be used to filter the data record to include just one discrete input or output. In the example below, the **TNK_HH** input has been selected. Whenever a single input or output is selected, statistics are generated regarding the selected input or output, spanning the period of time from the first state change to the last one in the record. There are 8 data points for **TNK_HH** below, and the input was ON for 45 seconds and OFF for 15 seconds for the period of time between the first and last record.

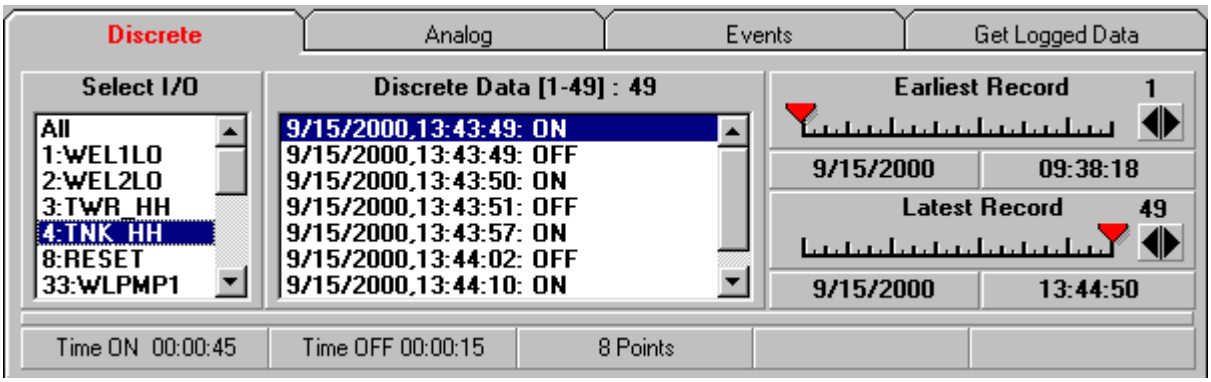

Moving the **Earliest Record** and **Latest Record** sliders or spin buttons will filter the total record with respect to time. Click and hold a slider and move the mouse to the left or right. You can also click on the spin buttons to change the time window. When you are finished filtering the time, click again on the input you wish to examine in the **Select I/O** list box to see the results of your changes. In the example below, the

total record has been limited to records 5 through 25. Within this time interval, 4 state changes of **TNK_HH** occurred.

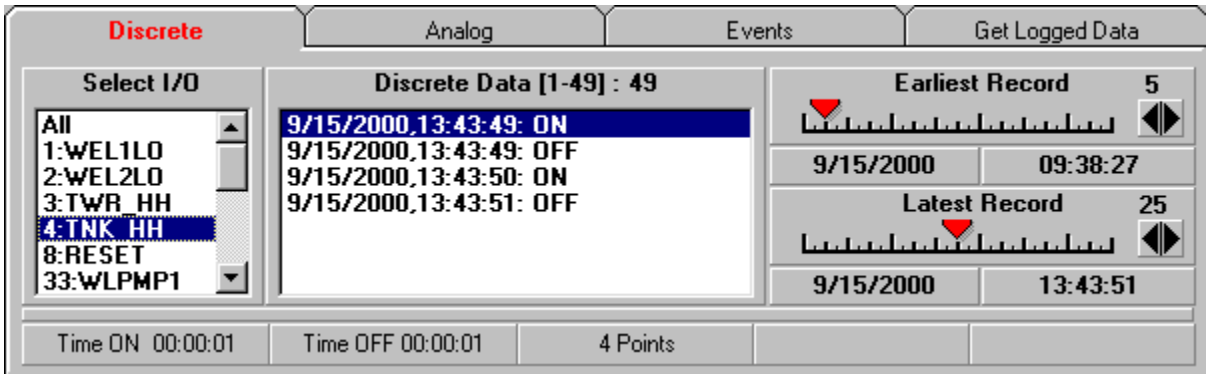

Looking at Events Data

First, go back to the **Get Logged Data** tab and extract the **Events** data. After the data has been extracted, click on the **Events** tab to examine the event datalogging record.

The **Events** data window appears. The **Select Event** list box contains a list of all enabled processes and other ProControl events. In the middle is the **Event Data** record. The **Earliest Record** and **Latest Record** extracted are shown to the right.

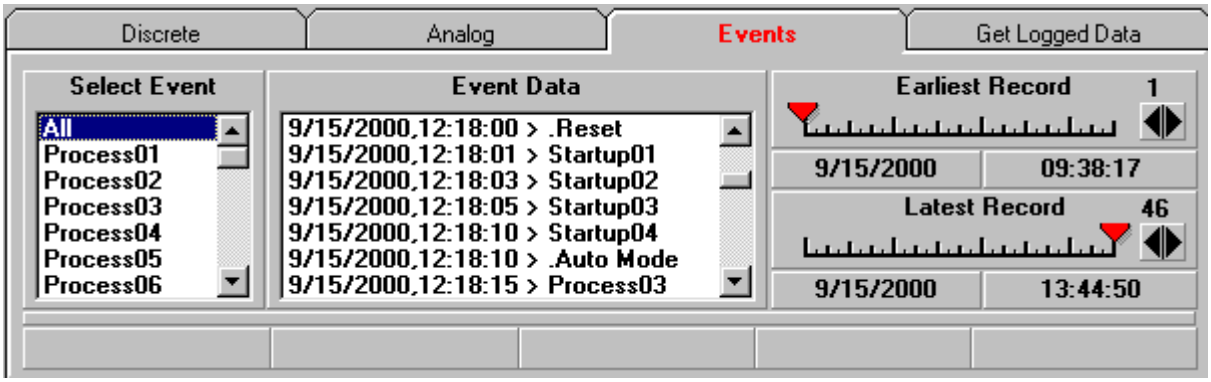

To view the data, follow the same procedure described for **Discrete Data**. Clicking on **All** in the **Select Event** list box will display all the events that were extracted. By clicking on an event in the **Event Data** window, a description is provided in the **Process Description** window below.

Looking at Analog Data

First, go back to the **Get Logged Data** tab and extract the **Analog In** or **Analog Out** data. After the data has been extracted, click on the **Analog** tab to examine the event datalogging record.

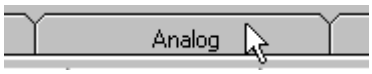

The **Analog** data window appears. The **Select Input** list box contains a list of all enabled analog inputs and outputs. In the middle is the **Analog Input Data** record. The **Earliest Record** and **Latest Record** extracted are shown to the right. By clicking on an input or output in the **Select Input** list box, a graph will be displayed in the window below.

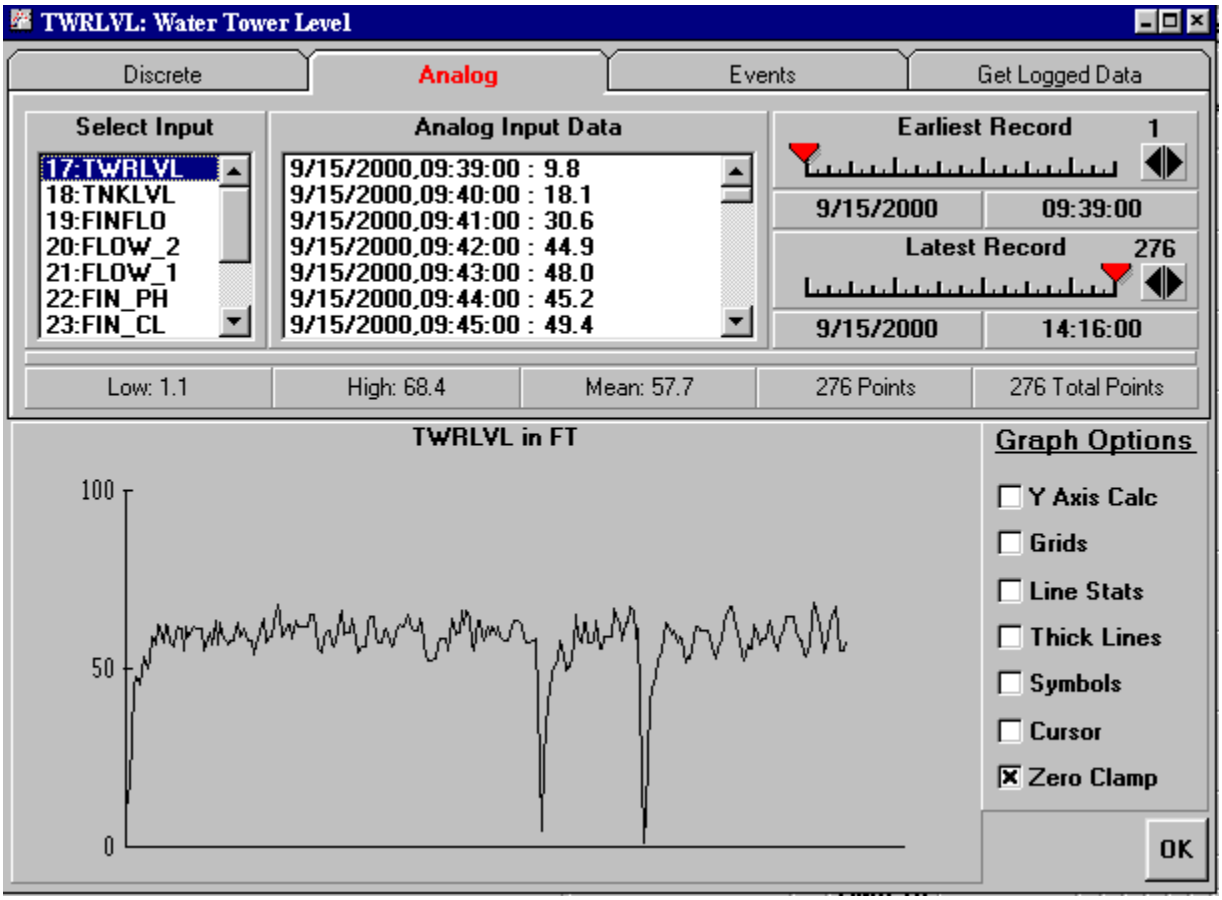

In the example above, a water tower level is shown as it varies over time. Immediately above the graph, statistics are shown regarding the selected analog point (in this case there are 276 data points with a **Low** of 1.1, a **High** of 68.4 and a **Mean** of 57.7). As with the digital and events data, the **Earliest Record** and **Latest Record** sliders and spin buttons can be used to filter the total record with respect to time, which is helpful in focusing on a smaller portion of the graph. If you filter the data in this way, be sure to click on the input tagname again in the **Select Input** list box to see the results of your changes.

Graphing Options

Graph Options are available to change the look of the analog graph. Click on the check box adjacent to the option you want to use to enable it. The graphing options are described below.

Y Axis Calc: The default Y axis range displayed by ProView is that which is configured for that input in the ProControl unit. By clicking on **Y Axis Calc**, ProView redraws the graph with a calculated Y axis range

based on the data in the sample. This will typically "tighten" the vertical axis on the graph to aid in showing smaller changes in the sampled data. Holding down the Shift, Control, or Alt key, respectively, while clicking **Y Axis Calc** will produce progressively tighter calculations of the vertical scale.

Grids: The grid option places some vertical and horizontal lines on the graph for reference.

Line Stats: This option will draw dashed lines across the graph at the **Low**, **High** and **Mean** input levels. In the example below, the **Grids** and **Line Stats** options have been checked.

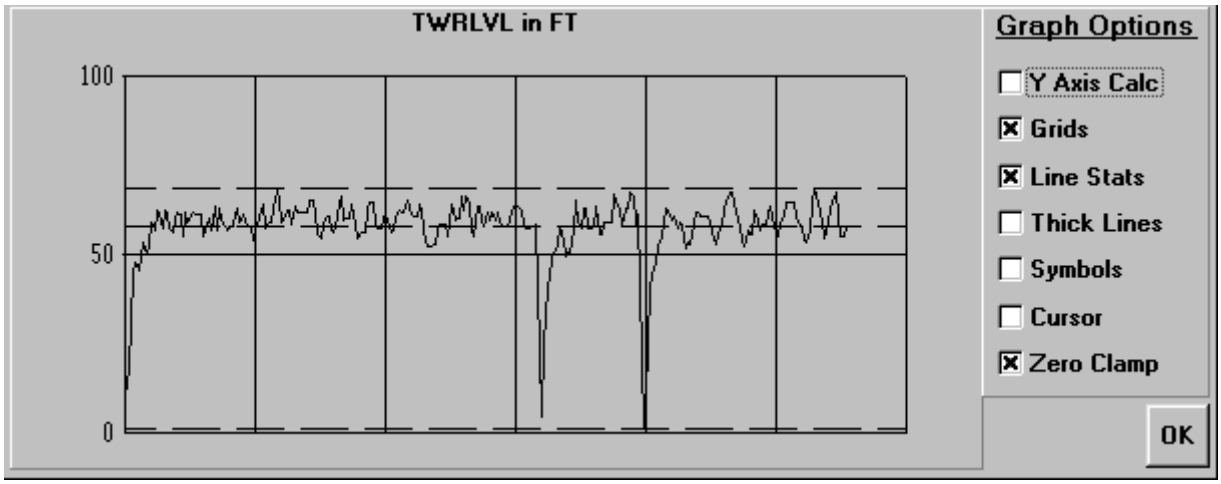

Thick Lines: This option increases the line weight of the graph.

Symbols: This option places a small "+" at each data point.

Cursor: This option places a vertical line on the graph at a data point selected in the **Analog Input Data** window. This option makes it easier to correlate the list data with the graph.

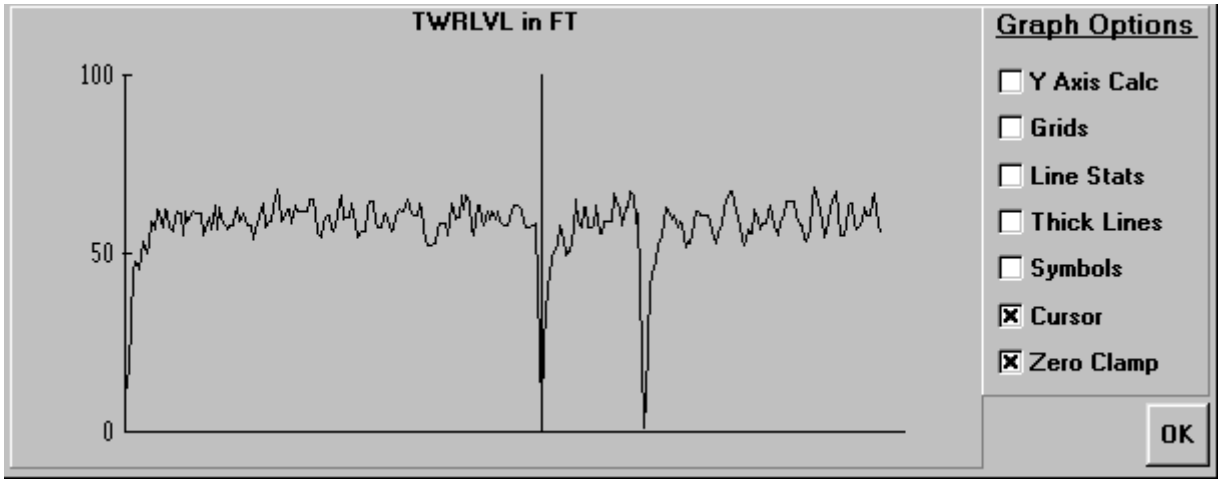

Zero Clamp: This option is selected by default, and forces the graph to display zero at all points where data was logged with a value less than zero. Negative values can be logged when an analog transmitter outputs less than 4 mA.

FYI

Be sure to disable the Zero Clamp option if you are viewing data for an analog input whose value can drop below zero under typical operating conditions.

After you are finished examining the datalogged information, you may want to save it for future reference within ProView or export it to a spreadsheet, database program or word processor.

Saving Logged Data to File

To save a datalogging record to a ProView-readable file, do the following:

1. Click on the **Get Logged Data** tab. Select the type of file you wish to save by clicking on the appropriate button in the **Data Type** panel. *Remember that you must have already completed the separate step of extracting the data type you wish to save.*

2. Click on the **Save Log Data to File** button.

3. This opens the **Save *xxxxxx* Data Log As** dialog box, where ***xxxxxx*** is the type of data you wish to save. ProView selects a default file name for you, which is the name of the site configuration file with the .pvd, .pva or .pve file extension depending on the type of data file you intend to save (discrete, analog, or events, respectively). However, you may wish to change the file name to indicate a date representative of the log you are saving, for instance.

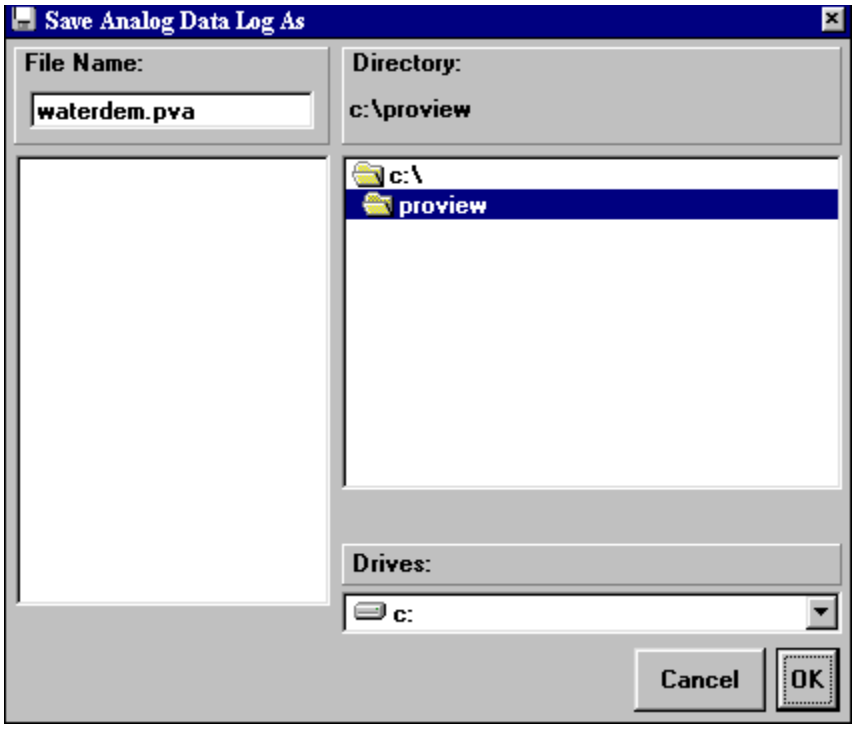

5. Click the **OK** button to save the file.

Opening a Datalog File

To view data that was previously saved in ProView-readable format, do the following:

1. In the **Get Logged Data** tab of the **Extract Datalogged Information** dialog box, select the type of data file you wish to open by clicking on the appropriate button in the **Data Type** panel.

2. Click on the **Open Datalog File** button.

3. This opens the **Open *xxxxxx* Data Log As** dialog box, where ***xxxxxx*** is the type of data you wish to view. ProView lists any files in the folder you have selected that contain the .pvd, .pva or .pve file extension (depending on the type of data file you intend to open). Click on the name of the file you wish to open, and it will appear in the **File Name:** text box. If the file you wish to open is stored elsewhere, select the location in the **Drives:** and **Directory:** list boxes.

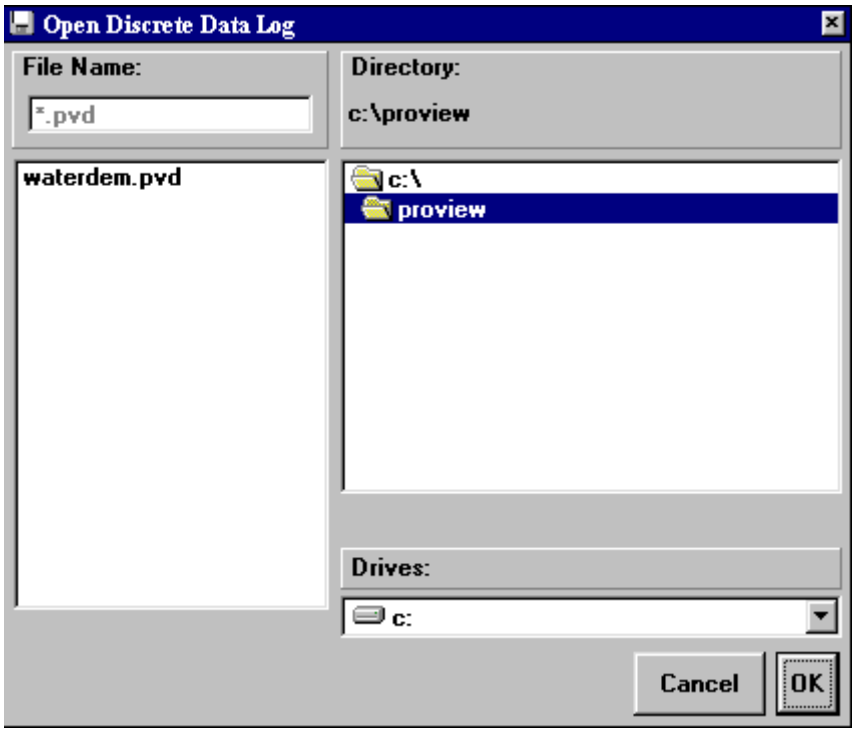

4. Click on the **OK** button to open the file. View the data as you would any logged data that you have just extracted.

Exporting Logged Data for use in Other Applications

ProView provides users the ability to export data for use in other applications, so that you can take advantage of the data manipulation and graphing capabilities provided by widely-used software. ProView allows you to export analog, discrete or event data to a CSV (Comma-Separated Variable) file, which can then be opened by any spreadsheet or database program (e.g., Microsoft Excel™, Access™). You can also export discrete and event data to a text file for use in a word processor.

1. In the **Extract Datalogged Information** dialog box, click on the **Get Logged Data** tab. Select the type of file you wish to export by clicking on the appropriate button in the **Data Type** panel. Note that analog output data cannot be exported.

2. Click on the **Export to Text File** or **Export to CSV File** button.

3. This opens the **Save Analog Data Log As .CSV File,** the **Save Discrete Data Log As .TXT File** or other dialog box, depending on the type of file you wish to export. The default file name is the truncated name of the site configuration file with the .csv or .txt extension. However, you may wish to change the file name to indicate a date representative of the log you are saving, for instance.

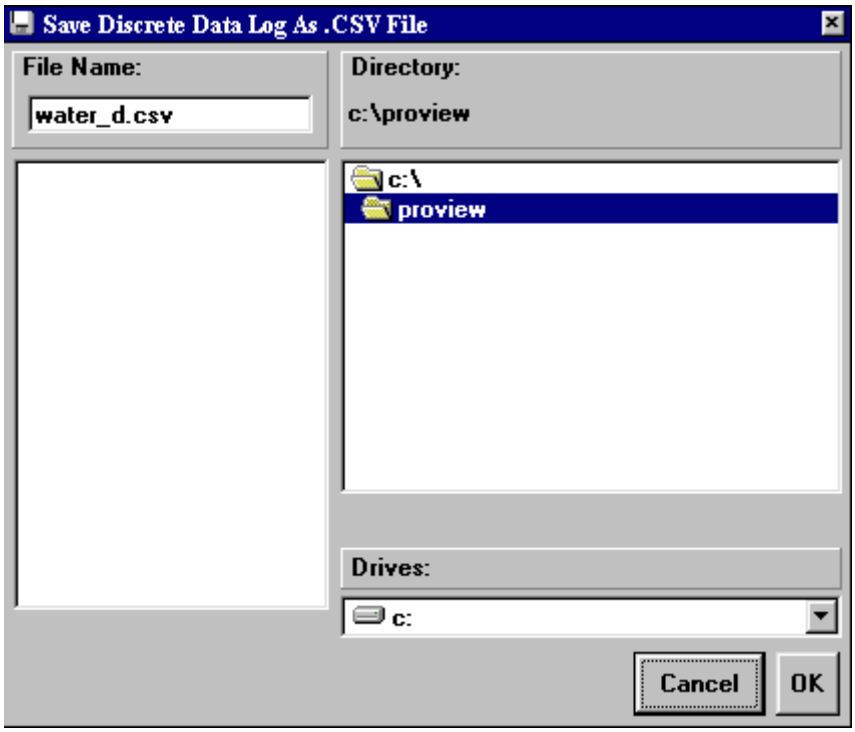

5. Click the **OK** button to export the file.

6. You will be asked whether you would like to include header information in the file that is saved. The header provides two lines of basic site information and titles for the columns of data.

!

*The CSV file format is considered a **Text** format by most spreadsheet and database software. When you open the .csv file created by ProView, be sure to specify that you are opening a Text file. For instance, in Excel, in the **File….Open** dialog box, choose **Text Files** from the list in the **File of type** list box.*

FYI

*A word about the date format in the exported files: Discrete and event data are exported using a time stamp in which the date and the time are in separate columns or separated by a comma (for example, 9/15/2000,09:39:08). Analog data are exported using a combined date/time in standard Windows format (which is the decimal equivalent of the number of days and fractions of a day since January 1, 1900). When an analog data file is opened in a spreadsheet or database software package, you will probably want to reformat the date/time information in the leftmost column. For instance, in Excel, select the column, choose **Format….Cells**, and select a **Number** format that includes both the date and the time.*

CHAPTER 7: OTHER OPERATIONS

This chapter explains how to save the site setup, print current operating data to a file, view the process configuration, use the annunciator feature and exit the program.

Saving the Site Configuration to File

While you work in ProView, you may change certain system settings that are stored in your site configuration (or .pvs) file. Examples of some of the parameters stored with your site file include remote communication settings, passwords, and notes for your tagnames. You should save your .pvs file before closing ProView if you make any changes to these parameters.

FYI

Remember that most operational settings, such as alarm levels, fax report numbers, datalogging setup, PID gains, etc. are stored in the ProControl unit, not in your site file. ProView "pulls up" this information stored in the ProControl unit when you connect to it. There is no need to save your site file if you only make changes to these operational settings.

To save your site configuration do the following:

1. Click on **Save Site** or **Save Site As…** in the **File** menu.

   Or

   Click on the **Save File** button on the toolbar. The **Save Site As** dialog box appears. If you chose **File…Save Site**, ProView bypasses the dialog box.

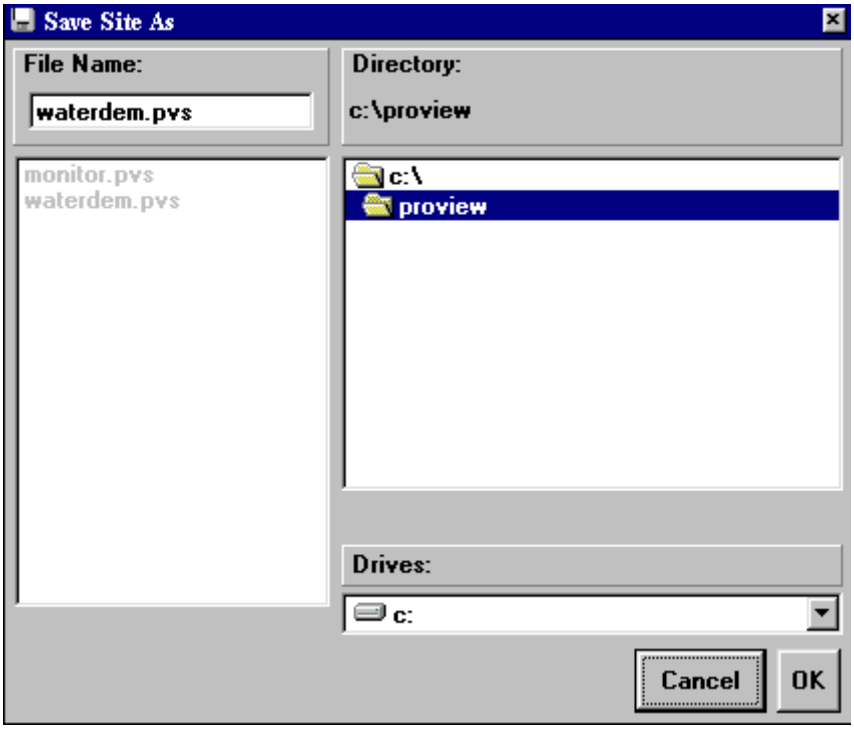

2. Select the **Drive**, **Directory** and **File Name** you would like and click on the **OK** button to save the file. You will be asked whether you wish to overwrite the existing file. Choose **Yes** to complete the file save.

Printing the Current Data to File

While you are connected to your ProControl via ProView, you can print the current operating data to a text file for future reference. This can prove useful for documentation and reporting purposes.

To save your current process data to a text file, do the following:

1. Click on **Print Current Data** in the **File** menu. You will see the **Save Current Data As** dialog box.

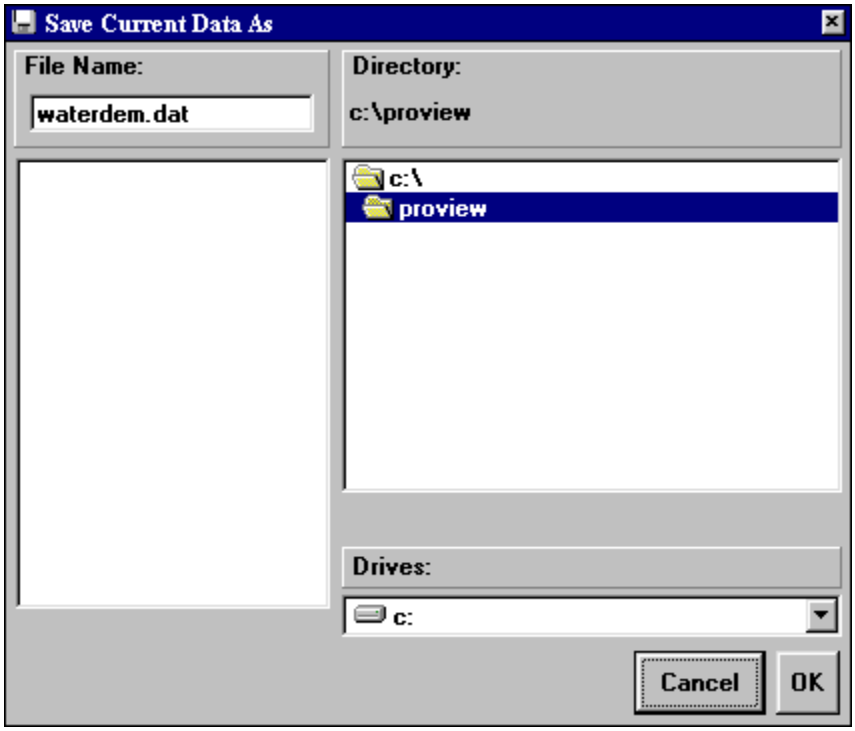

2. Select the **Drive**, **Directory** and **File Name** you would like. ProView selects a default file name for you, which is the name of the site configuration file with a .dat file extension. However, you may wish to change the file name to indicate a date representative of the information you are saving, for instance. Click the **OK** button to save the current data to the file.

You can examine the current data file with any text editor or word processor. An example of a file generated for our sample operation is shown on the following pages.

EOS RESEARCH LTD.
ProControl Series II+

ProView Current Operational Information

***** FAX Recipient:	BULLWINKLE MOOSE
***** Customer:	MAYBERRY WATER DEPT
***** Site Location:	MAYBERRY RFD
***** Setup:	1
***** Option:	B
***** Type:	102
***** Serial Number:	7429
***** Date:	04/23/2000
***** Time:	14:52:35
***** ProView:	Version 2.153

***** Communications State:	REMOTE CONNECT
***** System Mode:	Auto 14
***** Last Shutdown:	Last Shutdown 12:28:27 , 2/20/2000 , Remote
***** Alarms:	Alarms SET
***** FAX:	Report ON

THE CURRENT INPUT STATUS:

#	TAGNAME	CURRENT VALUE	LO ALARM	HI ALARM	TOTALIZER		HOURS ON		HOURS OFF	
1	WEL1LO	is OFF					000,000	23.6	002,704	52.8
2	WEL2LO	is OFF					000,000	02.7	002,705	13.8
3	TWR_HH	is OFF					000,000	01.0	002,705	15.5
4	TNK_HH	is OFF					000,000	01.5	002,705	14.9
8	RESET	is OFF					000,000	00.8	002,705	15.7
17	TWRLVL	41.0 FT	30.0	55.0			000,044	36.7	002,660	39.6
18	TNKLVL	10.07 FT	9.00	11.00			000,018	38.8	002,686	37.7
19	FINFLO	220.0 GPM	0.0	600.0	2,707,032	GAL	000,749	30.0	001,955	46.4
20	FLOW_2	178.1 GPM	0.0	400.0	11,535,456	GAL	000,758	50.8	001,946	25.6
21	FLOW_1	95.8 GPM	35.8	170.0	10,479,505	GAL	000,003	03.4	002,702	13.1
22	FIN_PH	8.39 PH	7.50	8.50			001,004	05.6	001,701	10.8
23	FIN_CL	0.99 PPM	0.80	1.15			000,499	10.1	002,206	06.3

THE CURRENT OUTPUT STATUS:

#	TAGNAME	CURRENT VALUE	HOURS ON		HOURS OFF	
1	WLPMP1	is ON	001,871	40.2	000,833	36.1
2	WLPMP2	is ON	001,871	26.7	000,833	48.8
3	FINPMP	is ON	001,871	27.5	000,833	48.5
4	CHLMET	is ON	001,655	51.6	001,049	24.9
5	NAOMET	is ON	001,099	11.9	001,606	04.6
8	PH_ALM	is OFF	000,991	03.1	001,714	13.3
9	CL_ALM	is OFF	000,485	39.2	002,219	37.3
10	TWRALM	is OFF	000,028	11.2	002,677	05.1
11	WL1ALM	is OFF	000,000	12.0	002,705	04.6
12	WL2ALM	is OFF	000,000	00.1	002,705	16.5
13	TNKALM	is OFF	000,003	42.3	002,701	34.3

THE CURRENT ANALOG OUTPUT STATUS:

#	TAGNAME	VALUE	PID Mode	SETPOINT	P Gain	I Gain	D Gain	MAX CHG
1	VSPMP1	39.1 %	ALG	40.0	10.0	.010	0.1	5.0 %
2	VSPMP2	46.9 %	ALG	10.00	7.33	.010	0.5	5.0 %
3	NAOHFD	32.0 %	ALG	8.25	9.16	.010	0.1	5.0 %
4	CHLRFD	22.3 %	ALG		50			5.0 %

```
ANALOG OUTPUT NOTES
-------------------
VALUE   - The current output level expressed as a percentage 0%=4ma 100%=20ma.
MAN     - (Manual) The PID or PRO control loop algorithm has been turned off.
PID     - The (Proportional, Integral, Derivative) control loop is running.
PRO     - The open loop (Proportional) algorithm is running.
MAX CHG - The maximum amount the output can change in one control cycle.


THE CURRENT REPORTING SETUP:

     ********************************************************************************
     ***** Report Enable:          ON                                           *****
     ***** FAX Number 1:           1 (999) 555-1234                             *****
     ***** FAX Number 2:           555-4321                                     *****
     ***** Scheduled FAX:          Every Day at:       07:00                    *****
     ***** Next Scheduled FAX:     07:00                                        *****
     ***** Pager #1:               Enabled, Numeric                             *****
     ***** Pager #2:               Enabled, AlphaNumeric                        *****
     ***** Paging:                 Will occur at 2400 baud                      *****
     ***** Page Number 1:          1 (700) 555-6789                             *****
     ***** Pager ID    1:          9876543                                      *****
     ***** Page Number 2:          1 (700) 555-6789                             *****
     ***** Pager ID    2:          3456789                                      *****
     ********************************************************************************

THE CURRENT DATALOGGING SETUP:

     ********************************************************************************
     ***** Enabled Datalogging:    Digital ,Analog ,Event                       *****
     ***** Datalogging Interval:   00:01                                        *****
     ***** Next Datalog Time:      13:47                                        *****
     ********************************************************************************
```

Reviewing the Process Configuration

ProView includes a utility that can help you understand the control logic that is programmed into your ProControl unit (if your site file is not the most up-to-date version, note that the control logic shown may not match what is in your ProControl unit). Click on **Process Configuration** under the **File** menu, and the following screen will appear, showing the inputs and outputs that are configured for your system:

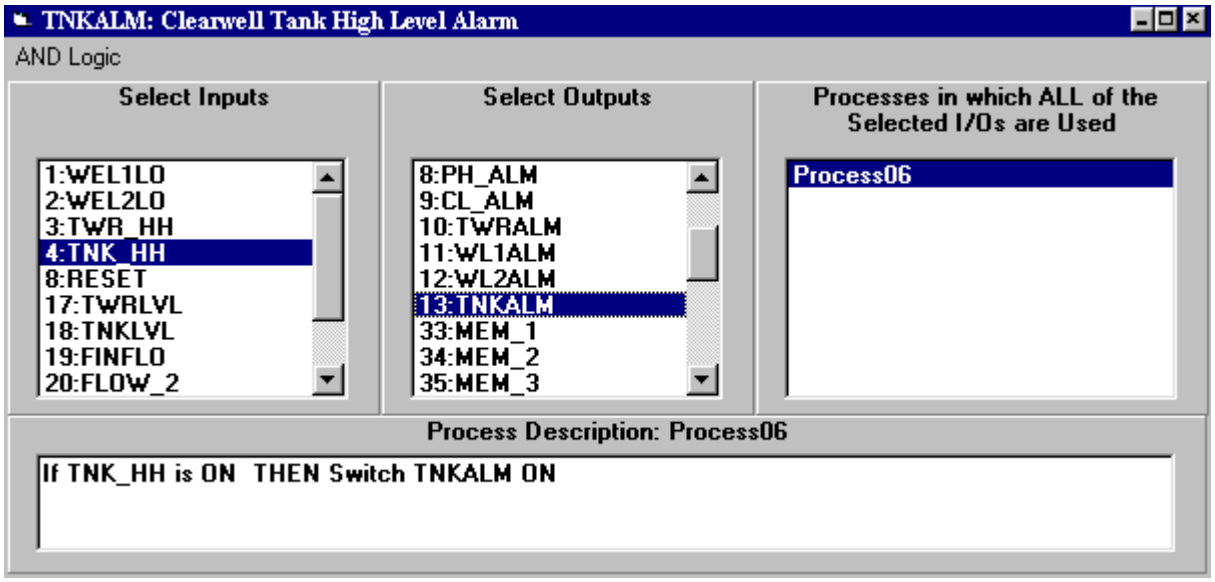

By selecting inputs and outputs from the left and center columns, respectively, you will see a listing of process tasks that include your selected I/O. For instance, if you choose an output from the center column, you will see a list of processes that turn that output ON or OFF in the window on the right. Clicking on a process will provide a description in the **Process Description** window. You can select both inputs and outputs to filter the list of processes. To de-select an I/O point, **<Ctrl> - left click** on it.

Annunciators

The Annunciator feature is useful for those ProControl users that remain connected to their systems for extended periods of time via ProView. The Annunciator is a visual alarm indicator for the ProView screen that is designed to draw attention to an alarm condition that *presently exists*, or *has occurred but has now cleared*. Clicking on **Annunciation** in the **File** menu toggles the Annunciation feature on and off. If any discrete or analog input that is configured as an alarm input becomes *active*, the input's tagname will turn red, and the System Status panel (the panel that indicates **Auto** or **Manual** mode) will begin to flash red. The annunciator continues to flash even if the input is no longer active, so that the operator does not miss an alarm condition. To acknowledge the alarm, click on **Clear Annunciators** in the **System** menu. If an alarm condition still exists, the annunciator will begin flashing again. *Note that only those alarm conditions that occur in the current ProView session will be annunciated.*

Exiting ProView

You can exit ProView by clicking on the at the top of the main screen or by clicking **Exit** in the **File** menu. You will be asked whether you want to save your site file and any logged data that you have extracted.

PROCONTROL

SERIES 2*plus* USER MANUAL

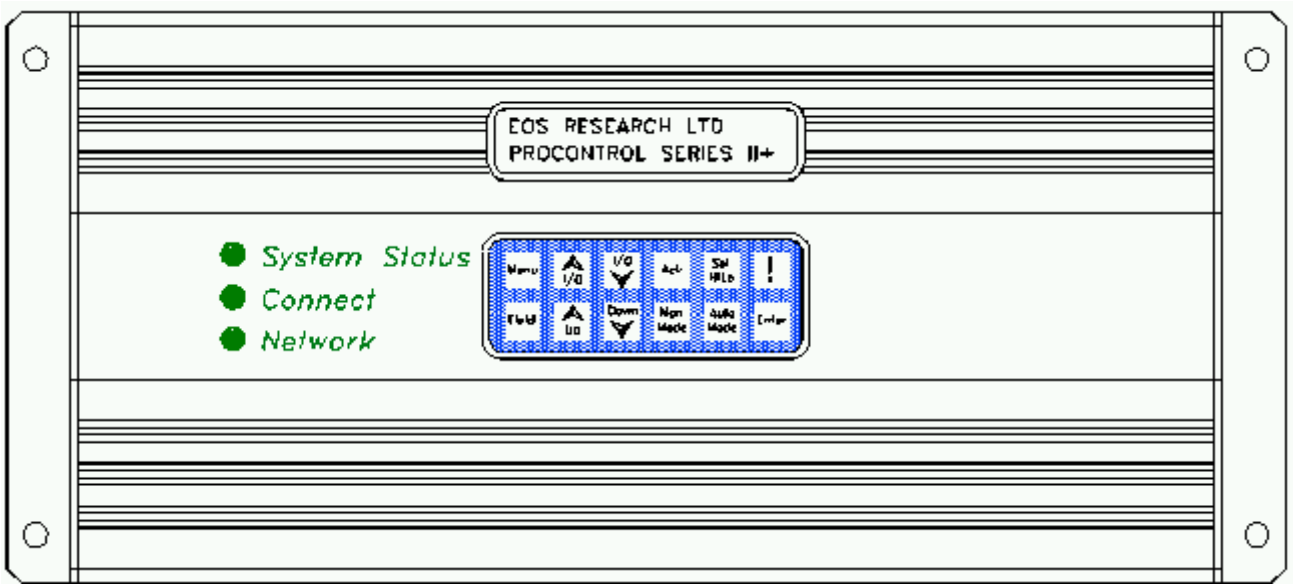

Version 2.X

LIMITED WARRANTY

EOS Research Ltd. (EOS) warrants its products to be free from defects in materials and workmanship for a period of one year from the date of purchase. Its obligation under this warranty is limited to repairing or replacing, at its sole option, any such defective products. This warranty includes parts and labor. This warranty does not apply to equipment which has been damaged by accident, negligence or misapplication or has been altered or modified in any way.

EXCEPT AS PROVIDED HEREIN, EOS RESEARCH LTD. MAKES NO WARRANTIES, EXPRESSED OR IMPLIED, INCLUDING WARRANTIES OF MECHANTABILITY AND FITNESS FOR A PARTICULAR PURPOSE. Some states do not permit limitation or exclusion of implied warranties, therefore the aforesaid limitation(s) or exclusion(s) may not apply to the purchaser.

This warranty gives you specific legal rights and you may also have other rights which vary from state to state.

IMPORTANT SAFETY PRECAUTIONS

Any complex hardware or software may be difficult to document, explain or understand. It is important to consider the consequences or unexpected or abnormal behavior which may be caused by a defect or human failure to comprehend. In order to protect people and property from damage, a thorough safety analysis should always be performed. When the consequences of a failure are serious, it is essential to protect life and property against such a failure with redundant backup systems or safety devices. It is agreed between the purchaser and EOS Research Ltd. that protection against and the consequences of any such failure are entirely the purchaser's responsibility.

This device is not approved for use in life support or medical systems.

As installed, this product may be part of a system which is required to meet various electrical, fire, safety or other codes and regulations. Compliance with these codes is the purchaser's responsibility.

Specifications subject to change without notice.

© 1996-2003 EOS Research Ltd.

EOS Research Ltd.
159 Walnut Street
Rochester, NH 03867
603.332.2099
Fax: 603.332.2727
procontrol@eosresearch.com

TABLE OF CONTENTS

1.0 SYSTEM OVERVIEW 1

1.1 General 1
1.2 Key Concepts 2
1.3 Control Basics 3

2.0 ON-SITE OPERATION 7

2.1 LCD Display 7
2.2 Keypad 9
2.3 Password 10
2.4 Operations Screen 10
2.5 I/O Keys 11
2.6 Digital Input Menu 11
2.7 Digital Output Menu 11
2.8 Analog Input Menu 12
2.9 Analog Output Menu 13
2.10 Menu Key 14
2.11 LED Indicators 17

3.0 REPORTING FEATURES 18

3.1 Fax Report 18
3.2 Page Alerts 23

APPENDIX A - Typical ProControl Wiring

Please see the ProView manual for operation of the remote access software which is supplied with the ProControl Series **2*plus***.

1.0 SYSTEM OVERVIEW

1.1 General

The *ProControl Series* **2**^{plus} is a small but powerful microprocessor based control/ telemonitoring system. By combining a control panel and remote monitor in one unit, the Series **2**^{plus} can act as a central supervisory and data management tool for any stand-alone operation. The *ProControl Series* **2**^{plus} can perform multiple tasks:

- **Stand-Alone Control:** The *ProControl Series* **2**^{plus} is a sophisticated programmable logic controller that will efficiently supervise and control your operation. It can interface with up to 70 electrical devices (float switches, pressure transducers, pH transmitters, flow meters, pumps, blowers, etc.), and execute numerous control functions simultaneously. Automatic shutdown routines can be programmed in to protect you operation during alarm conditions. It is extremely versatile in terms of the control algorithms it can execute.

- **Remote Control and Monitoring:** The *ProControl Series* **2**^{plus} gives you a window into your operation from any remote location, using the easy-to-use Windows-based software supplied with the system. You communicate with the ProControl over a modem link, which allows you to view all of your system's operating conditions, while also providing the same access to control functions that you would have if you were at the site (e.g., turning pumps on and off, adjusting alarm setpoints, etc.). No other telemonitoring device gives you the ProControl's level of remote control capability.

- **Reporting:** The *ProControl Series* **2**^{plus} will keep you informed. It will send you periodic fax status reports of your project operations on a schedule specified by you, and will alert you immediately either by fax or by numeric or alpha-numeric pager if an alarm condition warrants attention. No longer do you have to assume what's happening at your remote operation.....the ProControl will tell you exactly.

- **Datalogging:** The *ProControl Series* **2**^{plus} is your information manager. It is a powerful datalogger that automatically records all operating conditions in its battery-backed memory. You can access your logged data remotely at any time, and download it to your office computer for further processing. The datalogging capability is an invaluable tool for reporting purposes, troubleshooting, and trend graphing.

One or more of these features can be used in your installation; they are standard in every ProControl unit.

1.2 Key Concepts

The following are the building blocks of any Series **2**^{plus} monitoring and control system.

Inputs and Outputs (I/O's)

No system can be effective in the real world without communication and one of the principal ways the ProControl communicates is by responding to information collected by sensors and by issuing "commands" to other electronic or electrical devices. Sensor information constitutes an *Input* while a "command" to another device constitutes an *Output*. The Series **2**^{plus} works with all of the more important types of I/O devices in general use. Appendix A demonstrates how a variety of I/O devices are connected to the ProControl.

Digital Inputs

These inputs are designed to detect the closure of switch contacts such as those found on float switches or overpressure sensors. They can respond to any normally open or normally closed dry contact. The Series **2**^{plus} provides its own wetting (supply) voltage of 5 volts DC for each digital input circuit. The Series **2**^{plus} can respond to changes in state as fast as 4 Hz or 3 Hz (cycles per second) depending on the model purchased. Digital inputs are "debounced" for 125 or 150 milliseconds, respectively. This means that a switch or other input that changes state (becomes open or closed) must stay in that state for 125 or 150 milliseconds before the Series **2**^{plus} will respond to the change.

Eight high-speed digital inputs can also be used for traditional digital (pulse-output) flow meters. These inputs can detect signal changes at up to a 200/500 Hz rate. All high-speed digital inputs are "debounced" for 1250/500 microseconds. The faster rate applies only to those systems containing the 18.432 MHz processor.

Analog Inputs

These inputs are compatible with sensors which send out a 4 - 20 milliamp (mA) signal. Most analog sensors are available with this type of signal, examples being pressure transducers, pH transmitters, and many flow meters. These inputs allow the operator to read the actual "value" of a parameter, such as pressure, instead of an on/off signal.

Digital Outputs

Digital outputs turn things like pumps, solenoid valves, and alarm lights on and off. The Series **2**^{plus} digital outputs are relay outputs designed to switch small loads directly, such as motor starters, lamps, and solenoid valves.

Analog Outputs

Analog outputs are typically used in process control schemes where a controlled piece of equipment can accept a signal which is variable over a range. This output is expressed as a percentage (0 - 100%) and is used to control pump speeds, chemical dosing rates, etc., instead of conventional on/off operation. The equipment that the ProControl sends the analog output to must accept a 4 - 20 mA signal. Often, an analog output is used in conjunction with an analog input such as a pH transmitter to form a control scheme known as *feedback control*. In essence, the input and output will work together to maintain a user set input level. This concept is described further in the next section under *Analog Output Processes*.

Tagnames

Each input and output is given a descriptive *Tagname* by the user that uniquely identifies it to the system operator. For instance, a digital input could be called "TANKHI", an analog input could be called "AIRFLO" and a digital output could be called "PUMP_1". This tagname is used by the local LCD display, the FAX report and by the ProView software. The analog inputs are also given a *Units Tagname* which identifies the unit of measure associated with the input sensor. Each tagname can be up to six characters long and each units tagname can be up to three characters long ("PSI", for instance). The tagnames can include the uppercase letters A-Z, the numbers 0-9, a blank space, and the underscore (_) character.

1.3 Control Basics

The status of all inputs or outputs can easily be monitored both locally and remotely. What gives the Series **2*plus*** its real power, however, is the ability to automatically initiate actions based on the status of the inputs and your pre-programmed instructions (this is often called *Process Control*). These actions can include switching certain outputs, faxing back a report, sending an alphanumeric or numeric page, shutting down the entire system or sounding the local alarm. Process control functions are programmed into your ProControl by EOS Research or one of our technology partners according to your specifications.

Active State

Central to the use of control on the Series **2**^{plus} is the concept of *Active State*. Each input on the ProControl receives certain signals from a sensor which constitute "normal" operation and other signals which constitute an exception to normal operation.

A digital input can monitor only two states, ON or OFF (alternatively, CLOSED or OPEN). The *Active State* would be the state in which the controller would respond to the digital input, and perform certain actions or generate an alarm. For example, if a high level float switch in a tank is tripped (turned ON) by rising fluid level, we can say that its *Active State* correlates to a situation in which the fluid level is high. The active state of the float switch could cause the Series **2**^{plus} to trigger an alarm, turn off a pump, or initiate some other action. The Series **2**^{plus} can be set up so that either ON or OFF is the active state.

An analog input sensor can take on many states (or values) between the minimum and maximum of its measurement range. The ProControl operator, however, can set two threshold values which divide the total input span into two functional regions. These threshold values are more commonly called the *Low Alarm Limit* and the *High Alarm Limit*, although on the Series **2**^{plus} these thresholds are somewhat more flexible in use than those names imply. An analog input which has transcended either its Low Alarm Limit or High Alarm Limit is said to be in its active state.

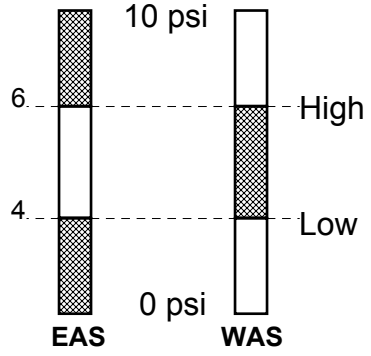

Figure 1. Active State

For instance, consider an analog input sensor which measures pressure from 0 to 10 PSI. The system operator could set the low limit to 4 PSI and the high limit to 6 PSI. In this case the *Active State* would usually be considered as the input state greater than 6 PSI or less than 4 PSI. This interpretation is called *Endpoint Active State* (EAS) on the Series **2**^{plus} because the endpoints of the range are the areas which need to trigger action or generate alarms. The opposite interpretation is also possible and is called *Window Active State* (WAS). Any input values between 4 PSI and 6 PSI would trigger action or generate alarms.

If the ProControl has *Alarms Set*, when any input enters its active state, a local beeper will sound on the ProControl. The word *Alarm* here applies only to the sounding of a local beeper and is not associated with any process control. The active state condition is indicated on the LCD display and can be acknowledged by the operator. The beeper is silenced when it has been acknowledged or after 30 seconds have elapsed. The beeper only operates when the system is operating in Manual mode.

Startup Sequence

The *Startup Sequence* is a series of control algorithms or steps which run in succession and which are designed to place the system in its normal operating mode. It can be as simple as turning all the outputs on simultaneously, or as complex as a multi-stage delay with many conditions. Up to 8 or 16 individual startup steps can be declared depending on the model of the controller. The ProControl can be configured to automatically run this sequence when the unit is powered up.

Process Tasks

A *Process Task* is an ongoing control algorithm which runs continuously. Think of each process task as an IF-THEN statement, in which an action is initiated if a certain condition or combination of conditions exists. Some examples are:

- IF Tank Level Sensor 2 is on, THEN turn Pump 2 off
- IF Air Flow Rate < 10 cfm AND Reactor Temperature > 250°, THEN open Bleed Valve 2

Up to 16 or 64 separate process tasks can be run simultaneously depending on the model of the controller. Process tasks can trigger FAX reports, pager alerts, and system shutdowns.

Shutdown Sequence

The *Shutdown Sequence* is a series of control steps which run in succession and which are designed to shut your system down in a manner which is best for the equipment or treatment processes involved. The shutdown sequence can be activated manually or automatically due to an alarm condition. Here is a typical shutdown sequence:

- Turn off Well Pumps 1 and 2
- Wait 5 minutes, then turn off Stripper Blower
- Open Bleed Valve 2
- When Oxidizer Temperature < 150°, turn off SVE Blower

Automatic Operation

The use of the startup sequence, process tasks, and the shutdown sequence constitutes *Automatic Operation* of your system with the ProControl Series $\mathbf{2}^{plus}$ (otherwise known as *Auto Mode*). The Series $\mathbf{2}^{plus}$ will be placed into auto mode (automatically) when your system has been started up using the programmed startup sequence. If one condition of the programmed startup sequence is not met during the startup process, your system will be completely shut down by the ProControl as a safety measure. Once the startup sequence has been successfully completed, the ProControl begins running the process tasks continuously. **PROCESS TASKS WILL RUN ONLY WHEN IN AUTO MODE**. Please note that the audible beeper will not sound even if the ProControl has *Alarms Set* when it is in Auto Mode, since the process tasks will control these situations as the user has specified.

Manual Operation

You can override the Series **2**^{plus} programmed control functions by operating in *Manual Mode*. In manual mode, your process will respond only to operator input from the keypad of the ProControl, or to commands issued from the ProView software. **PLEASE NOTE THAT PROCESS TASKS AND THEIR ERROR-CHECKING MECHANISMS DO NOT RUN DURING MANUAL MODE!** Manual mode is useful when you wish to troubleshoot your system, but none of the system safeguards built into auto mode are available. You can place your operation into auto mode any time by issuing the command from the keypad.

Analog Output Processes

In some cases, you may want to use an analog output to control equipment that maintains an analog input at a certain constant level. For example, you may wish to automatically maintain a pH of 8.5 in a reaction tank by varying the dosing rate of a chemical feed pump. The pH you wish to maintain (8.5) is called the *SetPoint* of the analog output process. An analog input to the ProControl (in this case, a pH transmitter) is said to provide *feedback* to the unit, and combined with an analog output, constitute *feedback control*.

PID Loops

A reliable type of feedback control can be obtained through a *PID Loop*. PID stands for *Proportional-Integral-Derivative*, and is a commonly-used process control technique. We'll skip the details of the mathematics involved, but suffice it to say that a PID loop is the favored control technique for most analog output processes. With only a *Proportional* term applied in the equation, the analog output is controlled based on an error signal generated from the difference between the SetPoint and the actual analog input. The PID loop can also improve its performance as it continues to run if an *Integral* term is used and can respond to quick changes in the controlling analog input if a *Derivative* term is used. EOS Research will configure your PID loops for you and can provide further information if necessary.

Proportional Outputs

In some cases, it may be desirable to base an analog output signal on an analog input value. In this situation, no specific SetPoint is used because there is a direct relationship between the output and input values. For example, if you wanted to base the output of a metering pump on some flow rate, you might use a proportional output to relate the amount of chemical metered to the flow rate.

2.0 ON-SITE OPERATION

2.1 LCD Display

If your unit did not come with an LCD display, the following sections *do not* apply.

The 2 line x 20 character LCD display is used to display and control system operations. The display is divided into separate areas or fields, as outlined below.

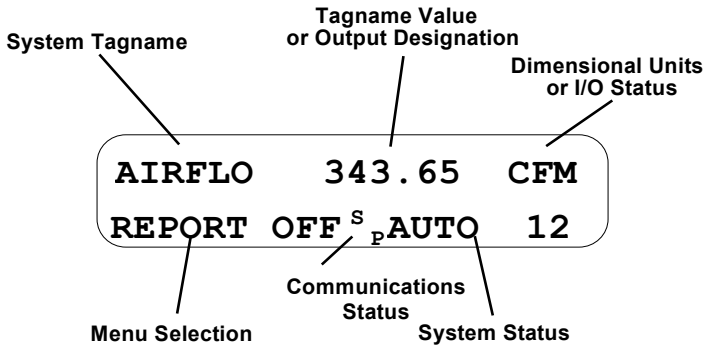

Figure 2. Display Fields

System Tagname This six-character field is used to identify the I/O point displayed. Descriptive names such as WELL1 or BLOWER are used.

Tagname Value For analog inputs, this field displays the value of the input, the high alarm limit, or the low alarm limit. For digital outputs, OUTPUT is displayed. For digital inputs, this field is unused. For analog outputs, this field displays the output percentage, the output level, or the associated input setpoint.

Dimensional Units or I/O Status For analog inputs, this three-character field displays the dimensional units associated with the input sensor, such as GPM or PSI. For digital inputs and outputs, this field displays either ON or OFF. For analog outputs, this field abbreviates percent with PCT. In the case of digital outputs, if the particular output displayed has been designated a lamp output (*see ProView manual*), and a lamp test is currently running, an asterisk (*) will appear before ON or OFF to indicate the lamp is illuminated despite the indicated output status (the output will return to this indicated status once the lamp test has been completed).

Menu Selection This field displays the current menu selection.

Communications Status This field displays one of five different descriptors which indicate any of several special functions of the ProControl. If no communications action is being taken, ">" will appear. Communications messages include: **SP** (Sending Page) - indicates that the unit is attempting to send either an alphanumeric or numeric page; **EF** (Encoding Fax) - indicates that the unit is presently encoding a facsimile report as a result of a request by either the operator or the unit itself; **SF** (Sending Fax) - indicates that the unit is attempting to send a fax report; and **DC** (Data Communications) - indicates that the unit is presently interfaced with ProView.

System Status This area displays the current system status: AUTO, MANUAL, START, or SHUTD and an associated process task number indicating the last successfully completed Auto process, current Startup process, or current Shutdown process.

2.2 Keypad

The Series 2^{plus} keypad contains 12 buttons which are used along with the LCD Display to control the operations of the system.

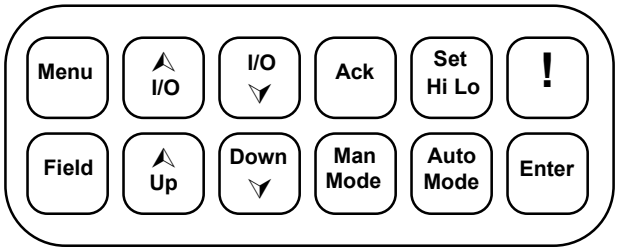

Figure 3. Series 2^{plus} Keypad

This key is used to scroll through a series of options which are displayed on the LCD screen, and which allow the user to configure various aspects of system behavior.

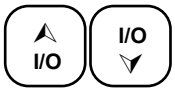

These keys are used to display information about particular I/O points on the LCD Screen. The keys allow the user to scroll through all of the system I/O points either forward or backward.

The Acknowledge key is used to silence the audible beeper or to acknowledge a memo sent from a remote ProView user.

The Set Hi Lo key allows the user to change the high and low alarm limits for analog inputs or to toggle the display in the I/O Summary.

The Emergency Shutdown key is used to turn off all outputs and return the system to manual mode. The programmed shutdown sequence is <u>not</u> executed using this key.

The Field key is used to select a character position to be edited. It is used in conjunction with any direct alphanumeric entry.

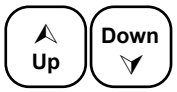

These keys are used to toggle system variables from one state to the next or to scroll through possible character entries when used in conjunction with the Field key.

This key is used to place the system in manual mode.

This key is used to place the system in auto mode.

The Enter key is used to initiate certain actions selected by other keys or to confirm alphanumeric editing done using other keys.

2.3 Password

When the system is first turned on the password screen is displayed and the user is prompted to enter the password to gain access to the system. "EOS" is the default password. The password on the Series **2**^{plus} was designed as a *low-level* security feature. It is not sufficient in and of itself to withstand a determined effort at system entry. The ProControl unit can be configured to bypass the password screen when the unit is powered up.

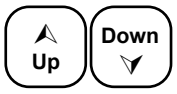


```
CUSTOMER ID TAGNAME
ENTER PASSWORD: BAA
```

Use the Up and Down keys to change the character displayed above the cursor.

```
CUSTOMER ID TAGNAME
ENTER PASSWORD: BAA
```

The Field key is used to move the cursor to the next character to be edited.

```
CUSTOMER ID TAGNAME
ENTER PASSWORD: EOS
```

The enter key submits the password for approval.

If the password was entered correctly, the following screen will be displayed for about a second before the operations screen is displayed:

```
Password Accepted
VER 2.XXX    : 1
```

ROM Version # — User Setup Version #

Otherwise, the following message will be displayed for a second and the user will be returned to the password menu:

```
Incorrect Password
```

2.4 Operations Screen

After the password has been entered correctly, the operations screen is displayed. The operations screen allows the user to set system parameters and to review the status of all system inputs and outputs.

```
WELL1              OFF
ALARMS SET >MANUAL
```

2.5 I/O Keys

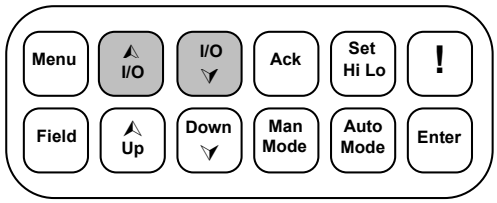

Pressing the I/O Up or I/O Down keys will scroll through the operational I/O points in the system. Data relevant to a particular I/O point will be displayed to right of the point's Tagname.

I/O

```
WELL2                ON
ALARMS SET >MANUAL
```

Forward scroll through I/O points

I/O

```
WELL3                OFF
ALARMS SET >MANUAL
```

Forward scroll through I/O points

I/O

```
WELL2                ON
ALARMS SET >MANUAL
```

Backward scroll through I/O points

2.6 Digital Input Menu

Input Tagname — Input Status

```
WELL2                ON
ALARMS SET >MANUAL
```

A digital input displayed in the operations screen will be displayed as shown. When the input is in its Active State "ON" will be displayed in the Input Status area. Otherwise, "OFF" will be displayed.

2.7 Digital Output Menu

Output Tagname — Lamp Status — Output Status

```
PUMP1     OUTPUT *OFF
ALARMS SET >MANUAL
```

A digital output displayed in the operations screen will appear as shown. When the output has been turned on, "ON" will be displayed in the Output Status area. Otherwise, "OFF" will be displayed. The cursor is displayed under the first character in the status field to indicate that it can be changed. The Lamp Status character (*) will be shown for a lamp output if a *lamp test* is running regardless of the output's true state.

Up Down

```
PUMP1     OUTPUT  ON
ALARMS SET >MANUAL
```

Pressing the Up or Down key will toggle the digital output state and turn the corresponding relay OFF or ON.

Field

```
PUMP1     OUTPUT  ON
ALARMS SET >MANUAL
```

Pressing the Field key will move the cursor to the Menu selection field.

2.8 Analog Input Menu

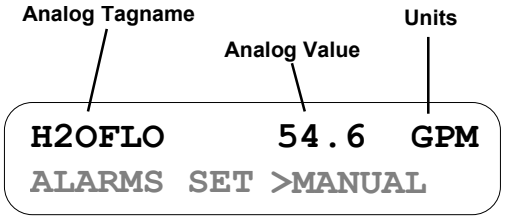

An analog input displayed in the operations screen will be displayed as shown to the left. The value of the analog input will be shown along with the dimensional units. In the case of a pulse accumulator (totalizer only), you will see only TOT where units is normally displayed.

Set Hi Lo

Use the Set Hi Lo key to set the low alarm limit.

Set Hi Lo

Press the Set Hi Lo key again to set the high alarm limit.

Set Hi Lo

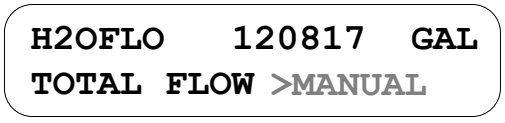

Press the Set Hi Lo key again to see the total flow on a flow type input, and once more to return.

Up Down

The Up and Down keys are used to change the value of the current character, as denoted by the cursor.

Field

The Field key is used to move to the next character to be edited.

Enter

To save the low alarm limit changes, press the enter key.

2.9 Analog Output Menu

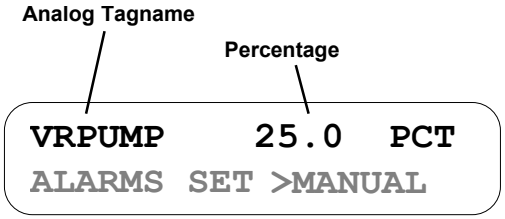

An analog output displayed in the operations screen will be displayed as shown to the left. The percentage of full scale output will be displayed as well.

Set Hi Lo

The Set Hi Lo key can be used to set the output percentage.

Set Hi Lo

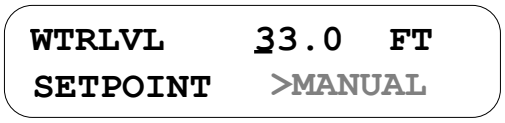

Press the Set Hi Lo key again to declare the SetPoint of an associated analog input. The SetPoint is used only if a PID control loop is in use as an analog output process.

Pressing Set Hi Lo again returns to the original menu.

Up Down

The Up and Down keys are used to change the value of the current character, as denoted by the cursor.

Field

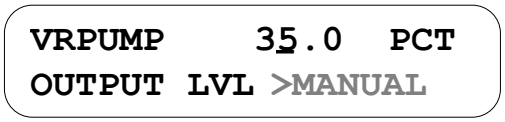

The Field key is used to move to the next character to be edited.

Enter

To save the output level changes, press the enter key.

2.10 Menu Key

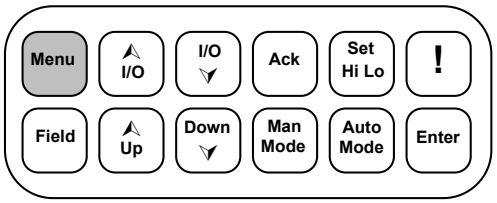

When pressed, the Menu key will scroll through a series of items which allow the user to configure various aspects of system behavior. A description of these items appear in a 10 character field at the bottom left of the display. Either the Up and Down keys or the Enter key is used to change the item.

ALARMS Use the Up and Down keys to enable or disable Alarms.

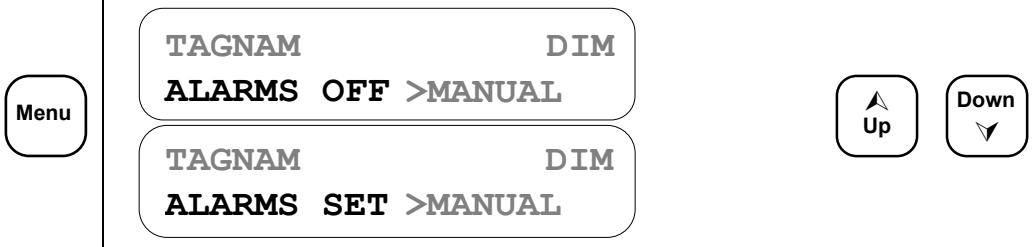

REPORT Use the Up and Down keys to enable or disable the unit's reporting capabilities (fax or page).

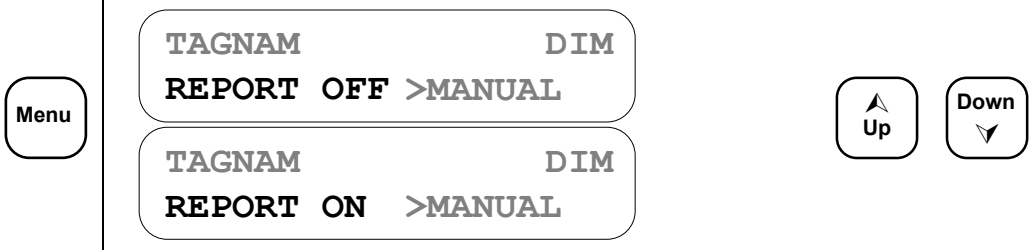

FAX NOW Use the Enter key to send a FAX report immediately.

STARTUP Use the Enter key to run the Startup Sequence.

SHUTDOWN Use the Enter key to run the Shutdown Sequence.

LAST SHUTDOWN This display item shows what input or output caused the last shutdown.

LOG OFF Use the Enter key to Log Off the system and return to the password menu.

LAST MEMO Use the Enter key to see the last memo sent from the remote ProView user. Up and Down are used to scroll through the message, and Ack is used to return to the ProControl menus. If you hit any other key you will see an informative message telling you which keys are valid. The message will be displayed for 3 seconds if no keys are pressed, but can be acknowledged before the 3-second period by pressing either the Ack or Enter keys.

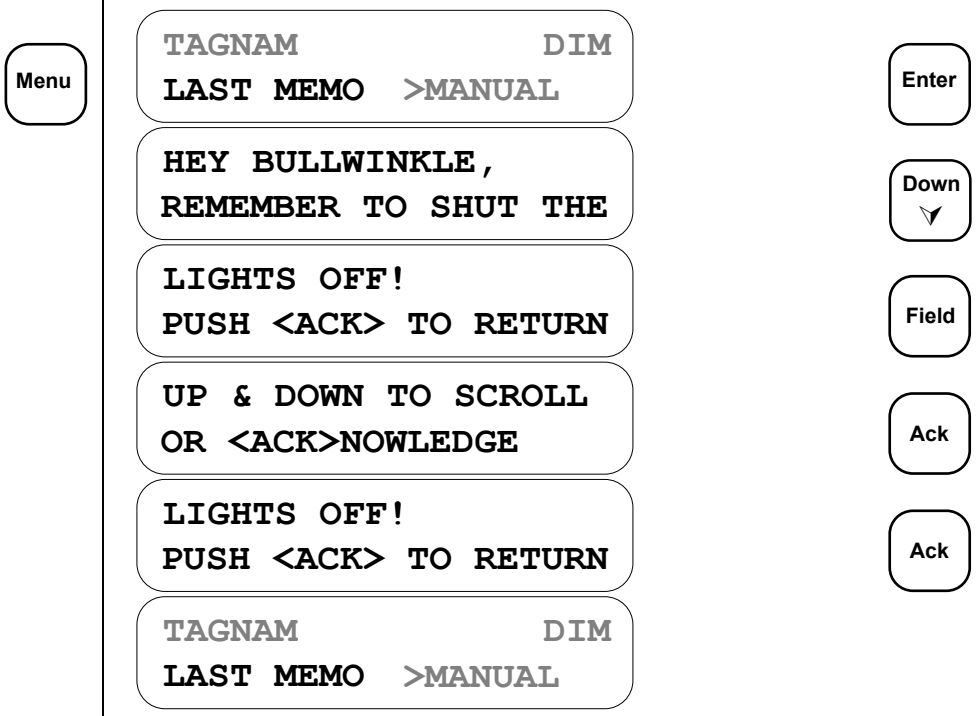

IO SUMMARY

Use the Enter key to enter the I/O summary. The analog input values 0-10 represent a percentage of full scale (i.e. 0 ≅ 4 mA, 5 ≅ 12 mA). Set HiLo is used to toggle between input/output summaries. An underscore represents an open input or an unswitched output. A block indicates a closed input or a switched output. An **x** or **X** is displayed when an output is not enabled and is unswitched or switched, respectively. An asterisk (*****) will be displayed if an output is declared as a lamp and a lamp test is currently being performed. The Field key can be used to move the blinking cursor through the outputs. The Up/Down keys can be used to toggle the state of the output whose position is covered by the blinking cursor. The Enter key will return the ProControl back to its standard menus. If you press any other keys you will see an informative message telling you which keys are valid. The message will be displayed for 3 seconds if no keys are pressed, but can be interrupted before the 3-second period by pressing the Enter key.

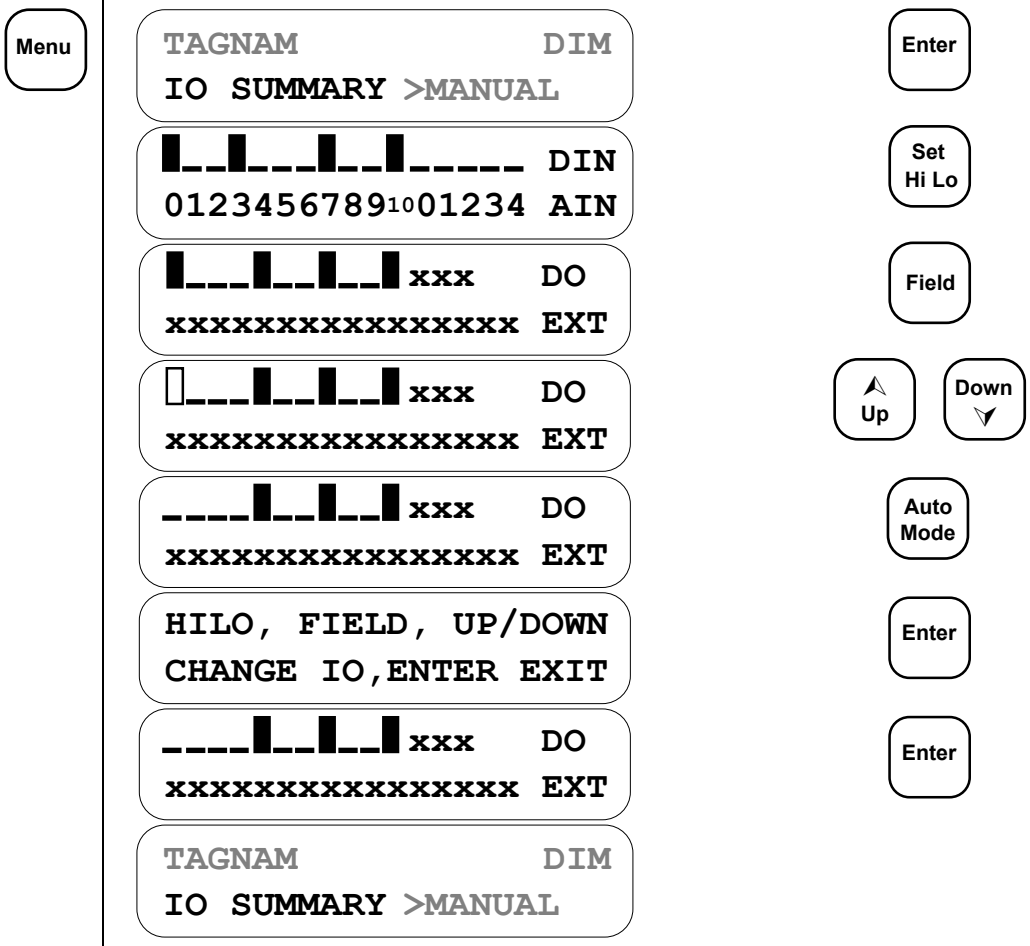

MODES Use the Up and Down keys to toggle an Analog Output from Manual control to PID control or Proportional control, depending on which analog output process is being used. This selection will only appear if an analog output tagname is displayed and the analog output is part of an analog output process.

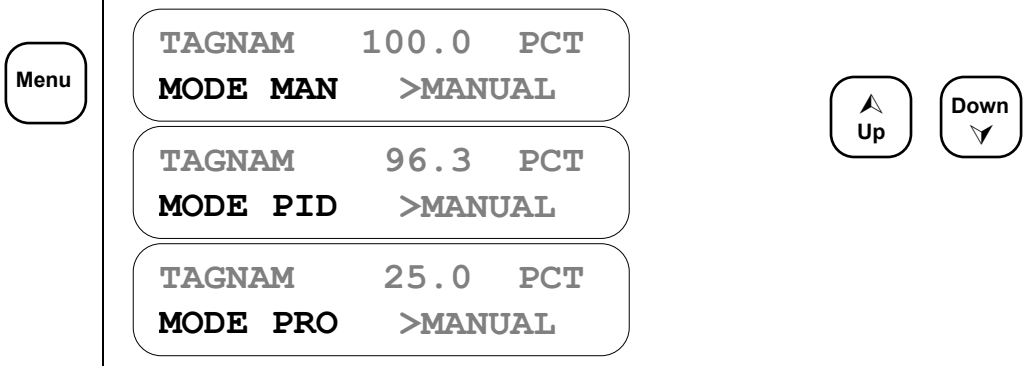

GROUP The ProControl allows outputs to be assigned to different *Groups* to allow greater process control flexibility. In some cases, you may wish to be able to specify alternate process tasks for a given output. For instance, you can have the operation of a pump be controlled by a series of level switches in a tank, or alternately, the pump can be run on a timed cycle. By selecting the appropriate process Group, you can change the control strategy for that piece of equipment. EOS Research will configure the groups for you according to your specifications

Use the Up and Down keys to select a Group for the displayed output. This menu item is displayed only for outputs that have been configured by EOS to have alternate process Groups.

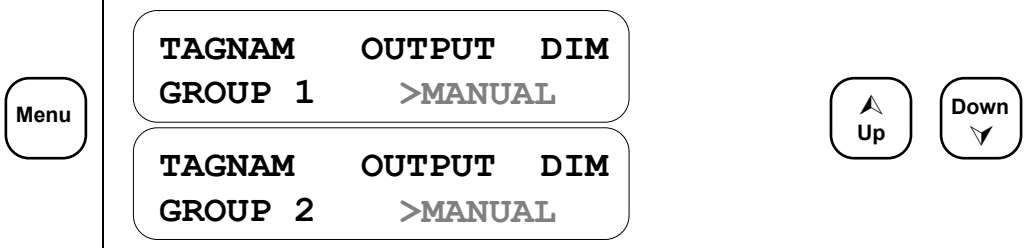

2.11 LED Indicators

Your ProControl unit has three status LEDs to the left of the keypad, which are used to indicate the following:

System Status: Normally ON when unit is powered.
One blink - The system has internally reset.
Two blinks - An internal error has occurred.

Connect: ON if user is remotely or locally connected.
ON if system is faxing or paging.
Slow blink - last fax or page failed, press ACK to clear.
Fast blink - local connect cable inadvertantly left plugged in, press ACK to clear.

Network: Rapid blinking indicates an active network connection.

3.0 REPORTING FEATURES

3.1 Fax Report

The ProControl unit will keep you informed of your system's operations with facsimile status reports. With the supplied ProView software you can configure the unit to send fax reports to up to two different numbers. You can also have these reports sent on a daily basis, at regular intervals during the day, or when triggered by specific process tasks. You can send one at any time by using the *Fax Now* option either from the menu on the ProControl's display, or through the ProView software.

The fax report you receive will contain several fields, each denoted by a shadow box. The number of fields will depend on the configuration of your system. For instance, you would not see a field indicating *Analog Outputs* if your system does not contain any of these.

The fields as you will see them are shown below. All information enclosed in brackets is variable and depends on your particular system configuration.

To:

```
<FAX RECIPIENT>
```

will indicate the intended fax recipient's name.

From:

```
THE <SYSTEM NAME>          SYSTEM IN <SITE LOCATION>    AT <TIME> ON <DATE>
SETUP VERSION X       :    ROM VERSION 2.x          :   MODEL B1
```

will indicate the name and location of your system, the date and time at which the fax report was initiated, your current ProView setup version, and the current on-board software version 2.X.

```
<MODE><PXX>  :   LAST SHUTDOWN AT <TIME> ON <DATE> BY <SHUTDOWN CAUSE>
                 FAX REPORT INITIATED BY <FAX CAUSE>
```

will indicate the current <MODE> of the controller and associated process. For example, if the controller is running the startup or shutdown sequence, you would see either START or SHUTD followed by the current algorithm. Similarly, in auto mode, you would see AUTO followed by the last successfully completed process task.

The LAST SHUTDOWN indicates when the system last initiated the shutdown sequence and what caused it to happen. For example, if the shutdown sequence were initiated by a key press, the cause you would see would be KEYPAD. Similarly, if the shutdown sequence were caused by a process task such as a high pressure sensor whose tagname was HIPRES, you would see HIPRES as the <SHUTDOWN CAUSE>. If multiple inputs or outputs caused the shutdown (i.e. a process task was dependent on more than one input being in the active state and/or multiple outputs being ON), the most recent one which changed will appear as the cause.

Similarly, the FAX REPORT INITIATED BY line will indicate the tagname of the I/O point which caused the fax to be sent, provided there was only one I/O point responsible. If multiple I/O points were responsible, the process itself will be indicated. Consider, for example, a process task where a shutdown was caused by HIPRES and BLOWER, and a fax was also generated. The <FAX CAUSE> would be PROCESS XX, where *XX* is the number from 1 - 64 of this process task. In the case where *Fax Now* was selected from the menu option on the LCD, the <FAX CAUSE> would be KEYPAD. The <FAX CAUSE> from a ProView generated *Fax Now* command would be REMOTE. This line will <u>not</u> appear on daily or interval scheduled fax reports.

Discrete Inputs:

```
<TAGNAME> is <STATE>   <TAGNAME> is <STATE> ...
```

will indicate the status of all of the digital inputs in four columns. Inputs which are in the active state will appear as ON and those which are in their normal state will appear as OFF.

Discrete Outputs:

```
<TAGNAME> is <STATE>   <TAGNAME> is <STATE> ...
```

will indicate the status of all of the digital outputs in four columns.

Analog Inputs:

```
<TAGNAME> is <VALUE> <DIM> LIMITS are L: <LO-LIM> <DIM> H: <HI-LIM> <DIM>
<TAGNAME> is <VALUE> <DIM> TOTAL FLOW is <FLOW>   <DIM>
<TAGNAME>                  TOTAL FLOW is <FLOW>   <DIM>
...
```

will indicate the current value, dimensional units, low alarm limit, and high alarm limit for all analog inputs which are not flow-type inputs. The precision of the values displayed can be selected through ProView. Any flow-type analog input which is responsible for maintaining a total flow will display that flow in place of the alarm limits. Any pulse-type digital input used for a digital flow meter will appear here since the information being obtained by that type of flow meter is analog in nature. In addition, pulse accumulators (volume totalizers) will appear here.

Analog Outputs:

```
<TAGNAME>   <PCT>  PCT  <MODE>      <TAGNAME>   <PCT>  PCT  <MODE>
...
```

will indicate the output percentage and mode of operation of all analog outputs. The precision is fixed to one decimal place and will range from 0.0 to 100.0, expressed as a percentage. The <MODE> of operation will be PID if the analog output is currently being used in a PID loop, or PRO if the analog output is currently being used in a Proportional scheme, otherwise it will be MAN indicating that the analog output is under manual control.

The next two pages contain examples of scheduled and alarm fax reports.

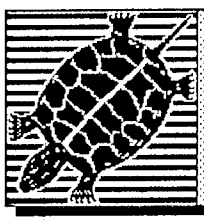

ProControl Series II+

EOS Research Ltd.

Fax Report

To:

BULLWINKLE J MOOSE

From:

THE NORTH WATER SUPPLY SYSTEM IN HAYBERRY USA @ 09:44:00 ON 12/10/1999
SETUP VERSION 1 : ROM VERSION 2.156 : MODEL B2

System Status:

AUTO P04 : NO PREVIOUS SHUTDOWN

Discrete Inputs:

WEL1LO is OFF	WEL2LO is OFF	TWR_HH is OFF	TNK_HH is OFF
RESET is OFF			

Discrete Outputs:

WLPMP1 is ON	WLPMP2 is ON	FINPMP is ON	CHLMET is ON
NAOMET is ON	PH_ALM is ON	CL_ALM is ON	TWRALM is OFF
WL1ALM is OFF	WL2ALM is OFF	TNKALM is OFF	

Analog Inputs:

TWRLVL is	59.2	FT	LIMITS are	L:	8.0	FT	H: 70.0	FT
TNKLVL is	0.00	FT	LIMITS are	L:	8.00	FT	H: 12.00	FT
FINFLO is	501.3	GPM	TOTAL FLOW is		14794	GAL		
FLOW_2 is	399.3	GPM	TOTAL FLOW is		12561	GAL		
FLOW_1 is	0.0	GPM	TOTAL FLOW is		0	GAL		
FIN_PH is	0.00	PH	LIMITS are	L:	6.00	PH	H: 8.00	PH
FIN_CL is	0.00	PPM	LIMITS are	L:	0.75	PPM	H: 2.00	PPM

Analog Outputs:

VSPMP1	86.8 PCT	PID	VSPMP2	100.0 PCT	PID
NAOHFD	100.0 PCT	PID	CHLRFD	20.0 PCT	PRO

ALARM Fax Report

EOS Research Ltd. — ProControl Series II+

To:

BULLWINKLE J MOOSE

From:

THE NORTH WATER SUPPLY SYSTEM IN MAYBERRY USA @ 09:34:12 ON 12/10/1999
SETUP VERSION 1 : ROM VERSION 2.156 : MODEL B2

System Status:

AUTO P04 : NO PREVIOUS SHUTDOWN
FAX REPORT INITIATED BY REMOTE

Discrete Inputs:

WEL1LO is OFF	WEL2LO is OFF	TWR_HH is OFF	TNK_HH is OFF
RESET is OFF			

Discrete Outputs:

WLPMP1 is ON	WLPMP2 is ON	FINPMP is ON	CHLMET is ON
NAOMET is ON	PH_ALM is ON	CL_ALM is ON	TWRALM is OFF
WL1ALM is OFF	WL2ALM is OFF	TNKALM is OFF	

Analog Inputs:

TWRLVL is 59.1	FT	LIMITS are	L: 8.0	FT	H: 70.0	FT
TNKLVL is 0.00	FT	LIMITS are	L: 8.00	FT	H: 12.00	FT
FINFLO is 203.5	GPM	TOTAL FLOW is	11348	GAL		
FLOW_2 is 399.6	GPM	TOTAL FLOW is	8671	GAL		
FLOW_1 is 0.0	GPM	TOTAL FLOW is	0	GAL		
FIN_PH is 0.00	PH	LIMITS are	L: 6.00	PH	H: 8.00	PH
FIN_CL is 0.00	PPM	LIMITS are	L: 0.75	PPM	H: 2.00	PPM

Analog Outputs:

VSPMP1	37.4 PCT	PID	VSPMP2	100.0 PCT	PID
NAOHFD	100.0 PCT	PID	CHLRFD	20.0 PCT	PRO

3.2 Page Alerts

The ProControl unit can alert you to important conditions at your site via a page alert. Any system that is not in manual mode, that is, executing process tasks or the startup or shutdown sequences, can send a message up to eighty characters in length to an alphanumeric pager or up to nineteen digits in length to a numeric pager. If you are out of the office and away from a fax machine, you will still be alerted to any trouble at your site. With ProView you can select up to two pager numbers to be called. Each process task or startup/shutdown algorithm is capable of sending a message to either or both of these pagers. The pager messages are configured by EOS Research according to your specifications.

An example message for an alphanumeric pager would be:

```
ANYTOWN SITE
High water level EQ Tank
System shut down!
Call Fred to fix: 555-6789
```

APPENDIX A

EXAMPLE WIRING DIAGRAM

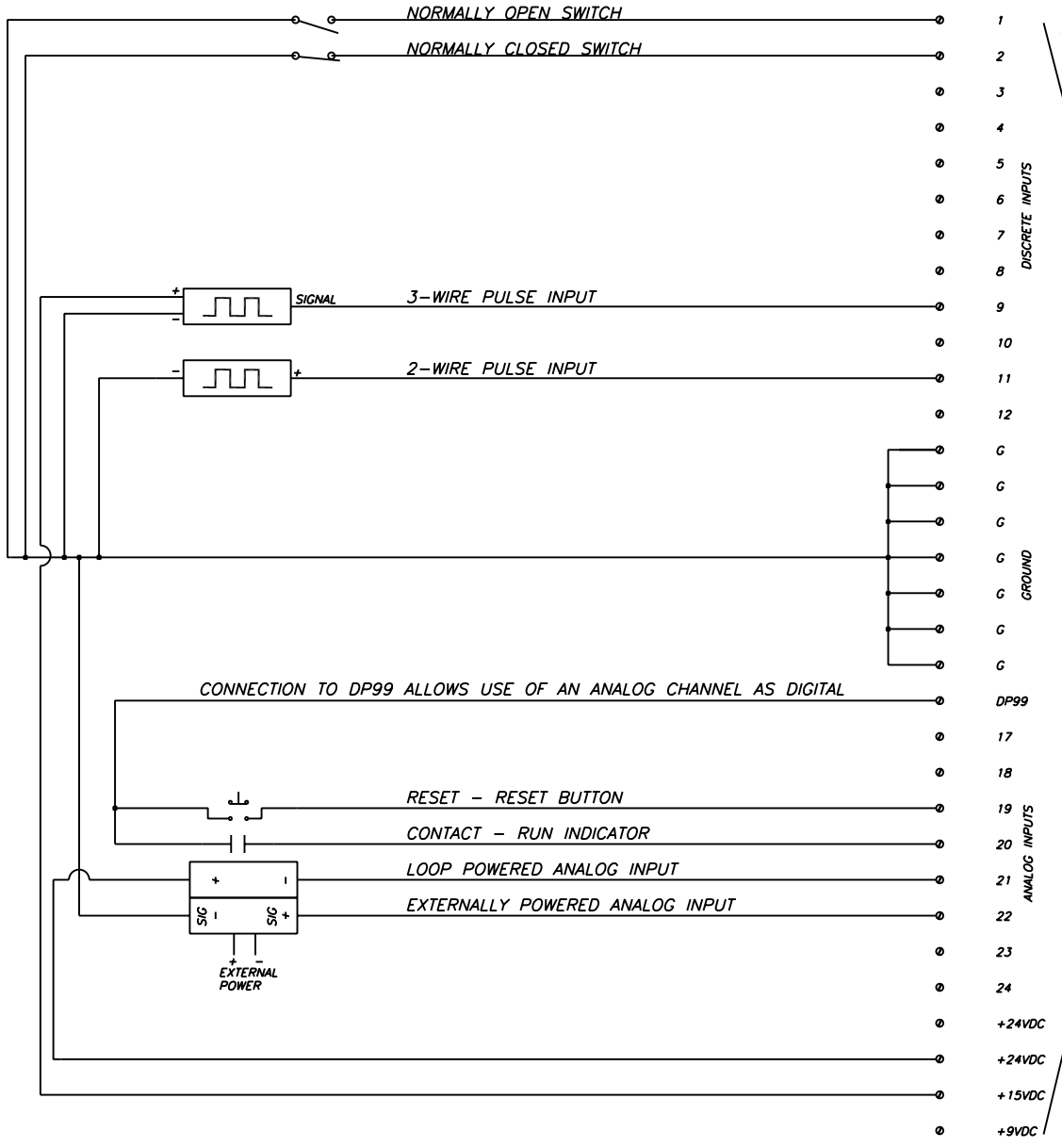

SERIES 2*plus* Type B1-B2, A1-A2

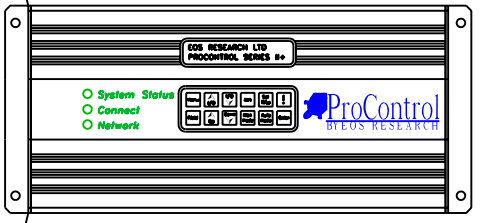

NOTES:
1. FOR ANALOG INPUTS, MAINTAIN VOLTAGE AND TOTAL LOOP RESISTANCE PER MFG. SPECIFICATIONS.
2. INPUT IMPEDANCE FOR SERIES 2Plus ANALOG INPUTS IS 135 OHMS.
3. ACTIVE DISCRETE INPUTS WILL SOURCE 1mA WHEN GROUNDED.
4. THE ProControl SOURCES 5VDC FOR DISCRETE INPUTS.
5. DISTRIBUTE ANALOG INSTRUMENTS EVENLY ACROSS +24VDC TERMINALS.

E O S
research
159 Walnut Street, Rochester, NH

TYPICAL ProControl WIRING
DIGITAL & ANALOG INPUTS - BOTTOM LEFT SIDE

EXAMPLE WIRING DIAGRAM

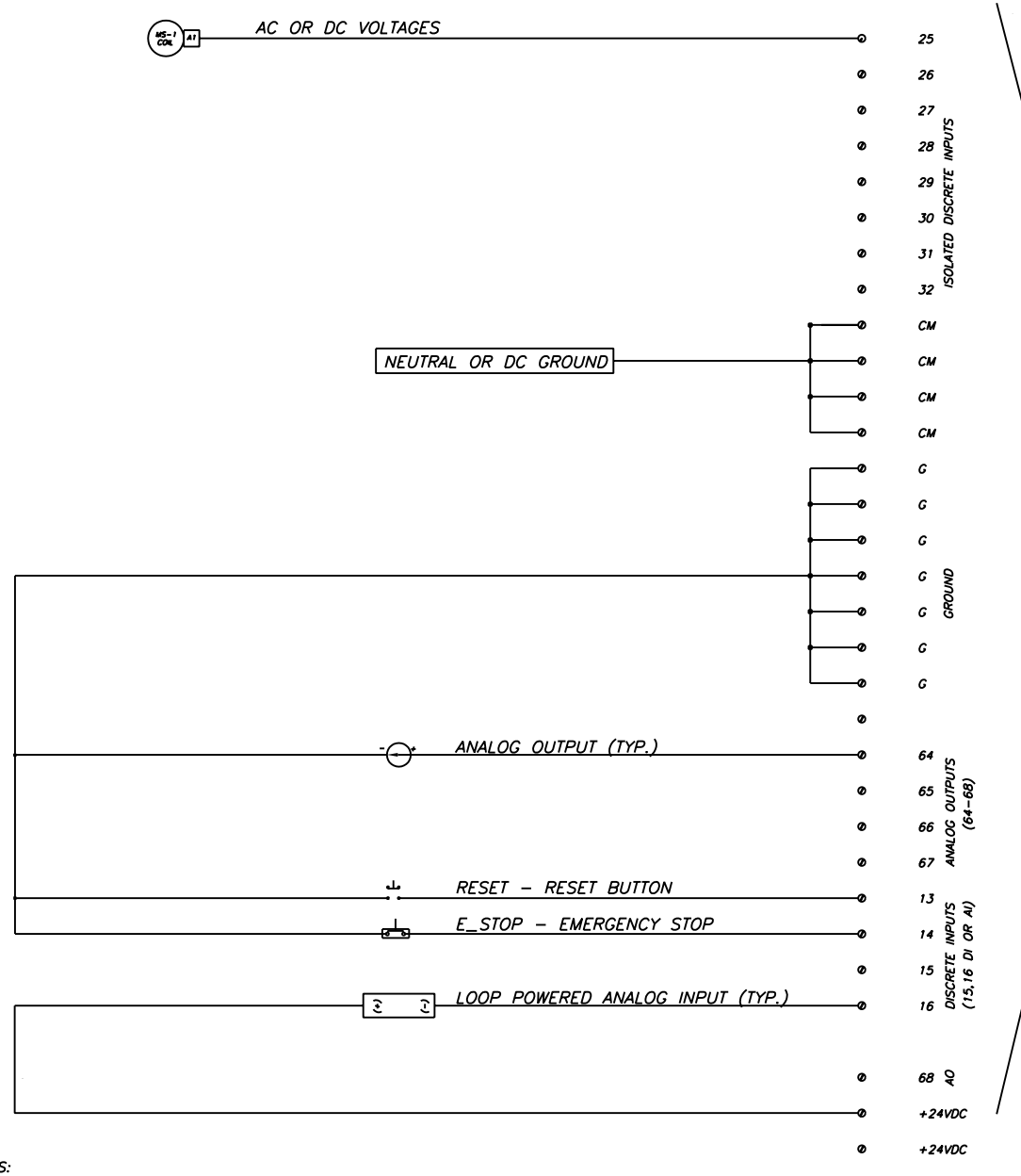

SERIES 2*plus* Type B2 ONLY

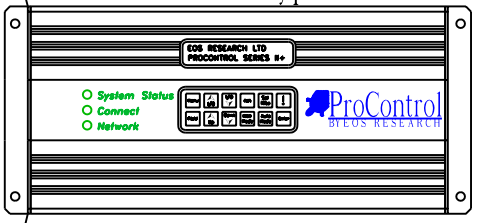

NOTES:
1. FOR ANALOG INPUTS, MAINTAIN VOLTAGE AND TOTAL LOOP RESISTANCE PER MFG. SPECIFICATIONS.
2. INPUT IMPEDANCE FOR SERIES 2Plus ANALOG INPUTS IS 135 OHMS.
3. MAXIMUM ISOLATED DISCRETE INPUT VOLTAGE 120V. ALL INPUTS MUST BE SAME VOLTAGE AND SHARE THE SAME COMMON OR NEUTRAL!
4. CM REPRESENTS COMMON FOR INPUTS 25-32. (ie. 120VAC, CM=NEUTRAL/ 24VDC, CM=DC GROUND)

E O S
research
159 Walnut Street, Rochester, NH

TYPICAL ProControl WIRING
DIGITAL INPUTS & ANALOG OUTPUTS
TYPE B2 - TOP LEFT SIDE

EXAMPLE WIRING DIAGRAM

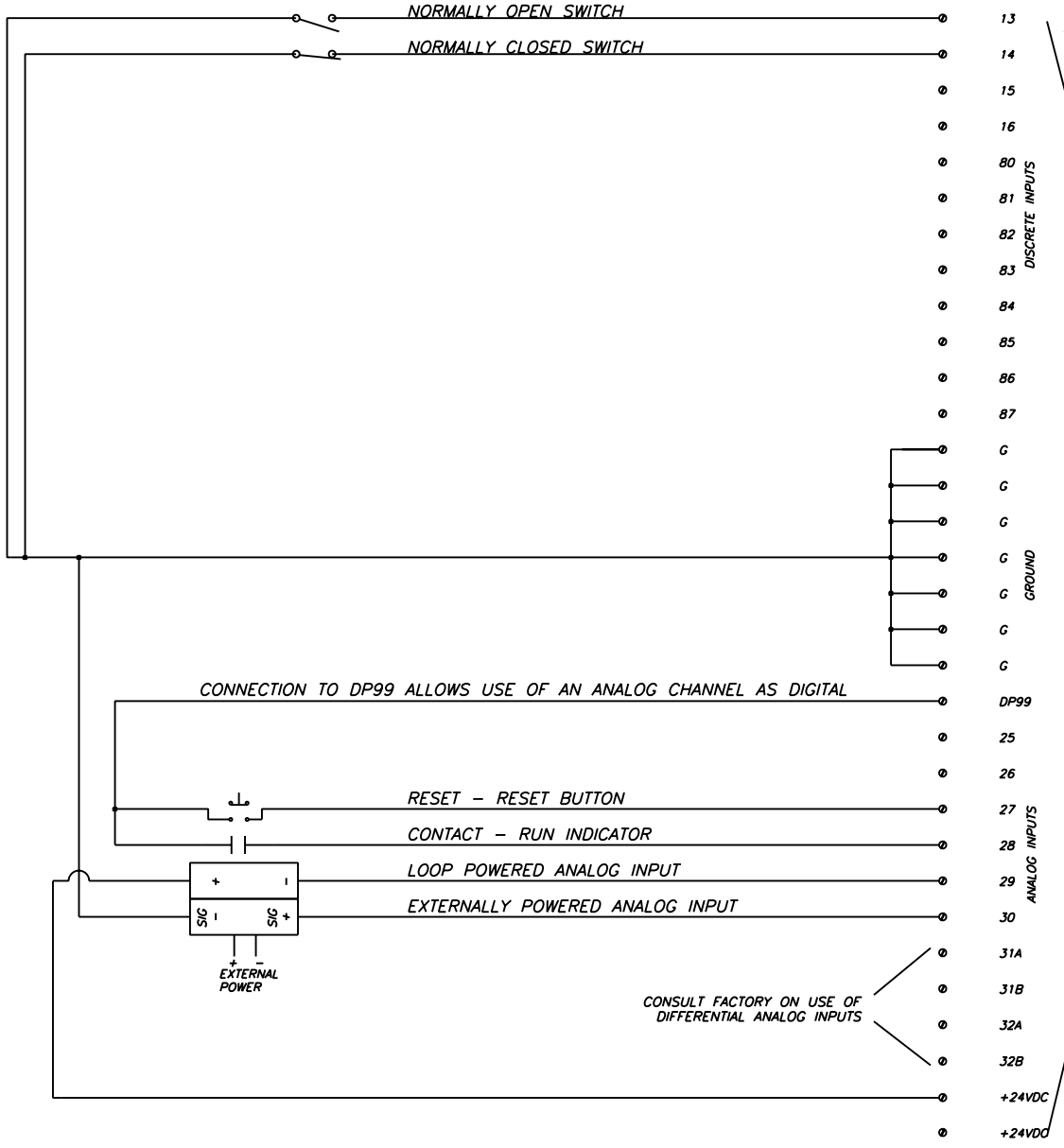

SERIES 2*plus* Type A1-A2

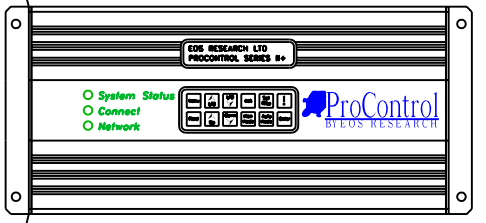

NOTES:
1. FOR ANALOG INPUTS, MAINTAIN VOLTAGE AND TOTAL LOOP RESISTANCE PER MFG. SPECIFICATIONS.
2. INPUT IMPEDANCE FOR SERIES 2Plus ANALOG INPUTS IS 135 OHMS.
3. ACTIVE DISCRETE INPUTS WILL SOURCE 1mA WHEN GROUNDED.
4. THE ProControl SOURCES 5VDC FOR DISCRETE INPUTS.
5. DISTRIBUTE ANALOG INSTRUMENTS EVENLY ACROSS +24VDC TERMINALS.

E O S
research
159 Walnut Street, Rochester, NH

TYPICAL ProControl WIRING
DIGITAL & ANALOG INPUTS -
TYPE A - TOP LEFT SIDE

EXAMPLE WIRING DIAGRAM

SERIES 2*plus* Type B1-B2, A1-A2

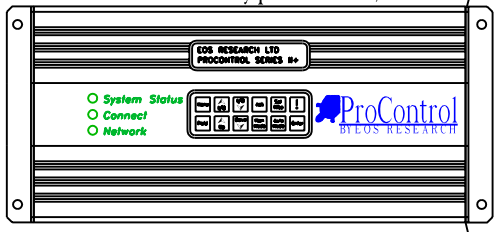

RS-232/SERIAL RJ-45 LOCAL CONNECTION PORT

TEL./RS-485 RJ-11 TELEPHONE/NETWORKING PORT

NEUTRAL LINE GROUND +24VDC

DISCRETE OUTPUTS

46
45 SLNVLV - SOLENOID VALVE
44 AIRCMP - AIR COMPRESSOR — MS-2 COIL
43 DISPMP - DISCHARGE PUMP — MS-1 COIL
42
41
40
CM2 COMMON FOR 40-46
39
38
37
36
35 VACALM - HIGH VACUUM ALARM — R
34 PRSALM - LOW PRESSURE ALARM — R
33 SMPALM - HIGH LEVEL ALARM — R
CM1 COMMON FOR 33-39

INPUT POWER 10VAC

10VAC TRANSFORMER SUPPLIED WITH ProControl UNIT. (REV 4 AND ABOVE)

NOTE: 20VAC-CT TRANSFORMER SUPPLIED PRIOR TO REV 4. DO NOT USE 20VAC TRANSFORMER ON REV 4 AND ABOVE!!

NOTES:
1. OUTPUT RELAYS RATED AT 125VAC/0.5A, 24VDC/0.5A
   UNITS SHIPPED AFTER 12/1/99 RATED AT 125VAC/1.0A, 24VDC/1.0A
2. CM1 IS SWITCHED TO 33-39 AND CM2 IS SWITCHED TO 40-46 WHEN OUTPUT IS ACTIVE.
3. DO NOT USE +24VDC FROM ProControl TO DRIVE OUTPUTS. FOR TRANSDUCER POWER ONLY.

E O S research
159 Walnut Street, Rochester, NH

TYPICAL ProControl WIRING
DIGITAL OUTPUTS - RIGHT SIDE

EXAMPLE WIRING DIAGRAM

SERIES 2*plus* Type A1-A2

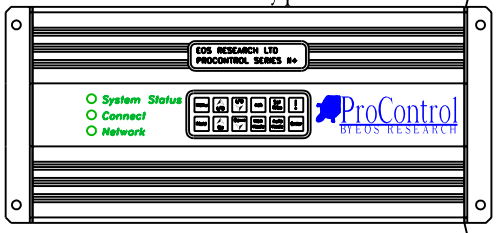

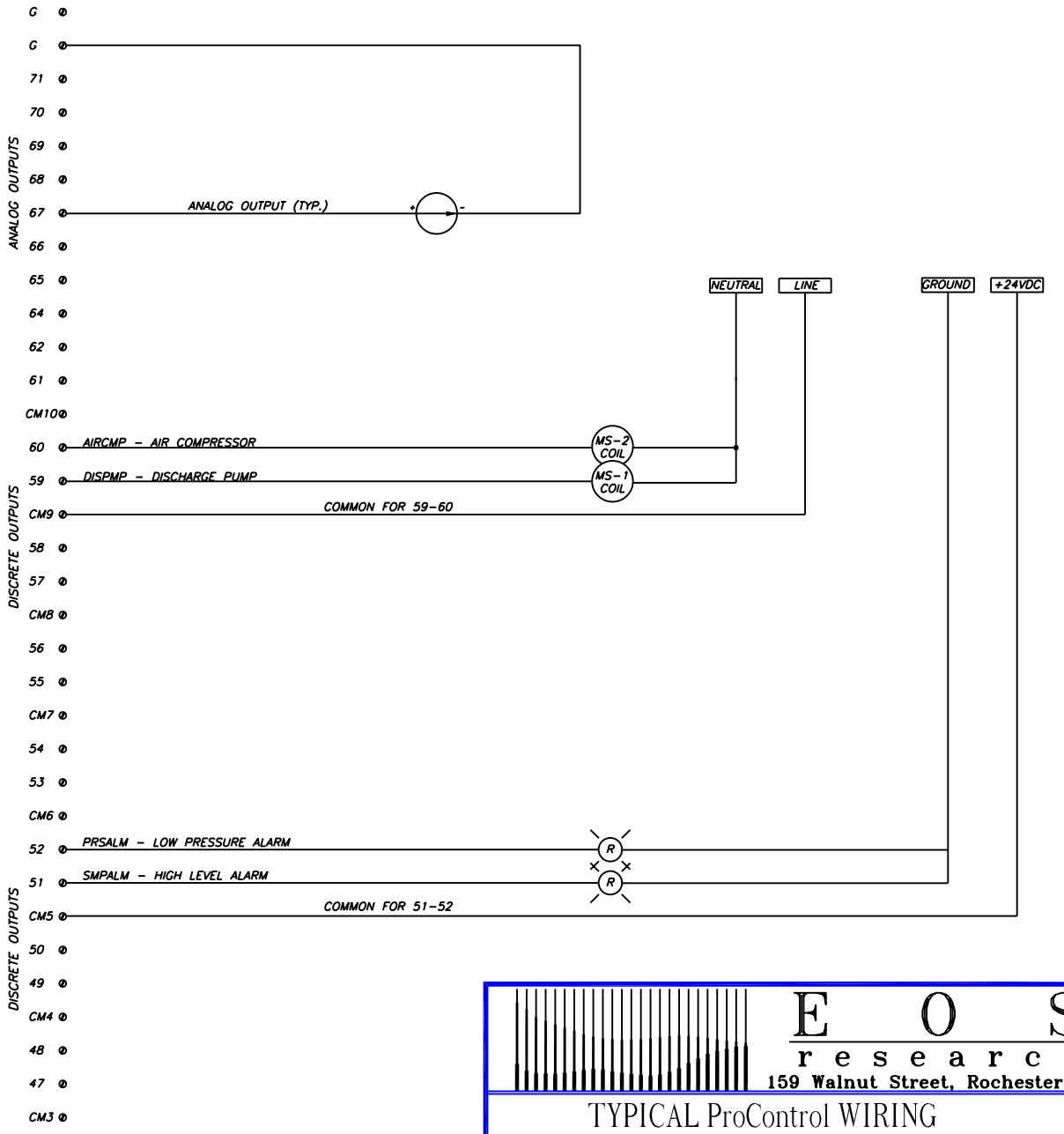

NOTES:
1. OUTPUT RELAYS ARE RATED AT 125VAC/0.5A, 24VDC/0.5A
2. CM3 IS SWITCHED TO 47-48, CM4 IS SWITCHED TO 49-50, ETC. WHEN OUTPUT IS ACTIVE.
3. DO NOT USE +24VDC FROM ProControl TO DRIVE OUTPUTS. FOR TRANSDUCER POWER ONLY.

E O S
research
159 Walnut Street, Rochester, NH

TYPICAL ProControl WIRING
DIGITAL & ANALOG OUTPUTS
TYPE A - TOP RIGHT SIDE

EXAMPLE WIRING DIAGRAM

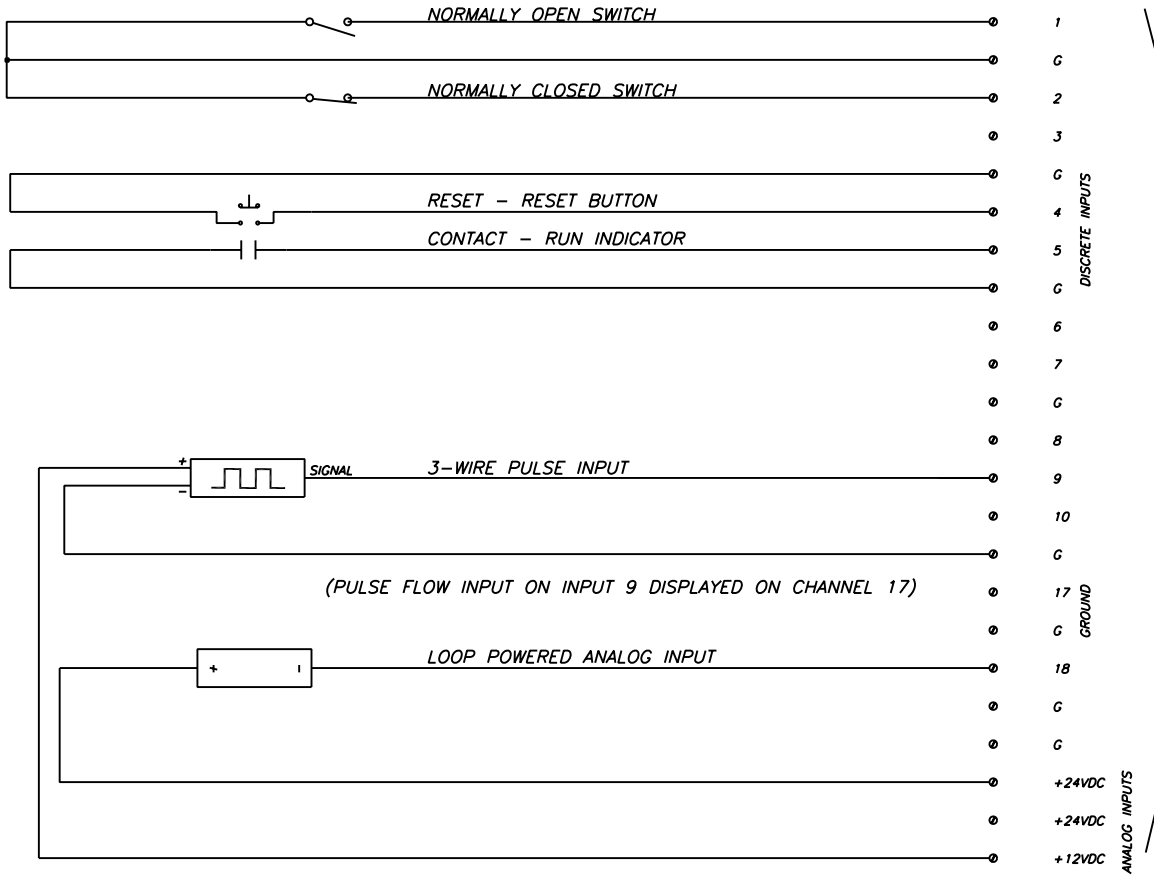

SERIES 2*plus* Type C1

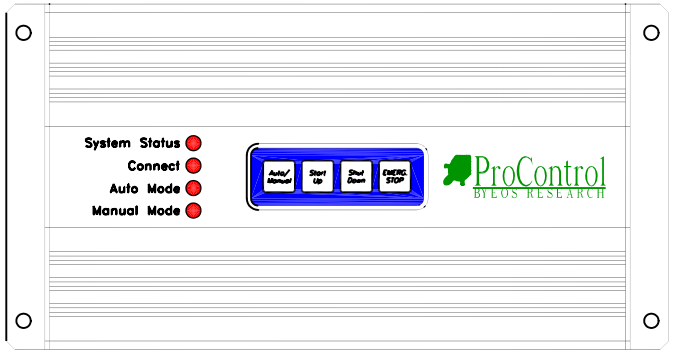

NOTES:
1. FOR ANALOG INPUTS, MAINTAIN VOLTAGE AND TOTAL LOOP RESISTANCE PER MFG. SPECIFICATIONS.
2. INPUT IMPEDANCE FOR SERIES 2Plus ANALOG INPUTS IS 135 OHMS.
3. ACTIVE DISCRETE INPUTS WILL SOURCE 1mA WHEN GROUNDED.
4. THE ProControl SOURCES 5VDC FOR DISCRETE INPUTS.
5. DISTRIBUTE ANALOG INSTRUMENTS EVENLY ACROSS +24VDC TERMINALS.

E O S
research
159 Walnut Street, Rochester, NH

TYPICAL ProControl Type C1 WIRING
DIGITAL & ANALOG INPUTS - BOTTOM LEFT SIDE

EXAMPLE WIRING DIAGRAM

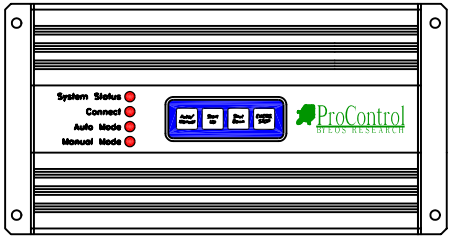

RS-232/SERIAL RJ-45 LOCAL CONNECTION PORT

TEL./RS-485 RJ-11 TELEPHONE/NETWORKING PORT

GROUND +24VDC NEUTRAL LINE

DISCRETE OUTPUTS

40 PRSALM - LOW PRESSURE ALARM (R)

39 SMPALM - HIGH LEVEL ALARM (R)

CM4 COMMON FOR 39-40

38

37

CM3 COMMON FOR 37-38

36

35 SLNVLV - SOLENOD VALVE (CR-1 COIL)

CM2 COMMON FOR 35-36

34 AIRCMP - AIR COMPRESSOR (MS-2 COIL)

33 RW_PMP - RECOVERY WELL PUMP (MS-1 COIL)

CM1 COMMON FOR 33-34

INPUT POWER 10VAC

10VAC TRANSFORMER SUPPLIED WITH ProControl UNIT.

NOTES:
1. OUTPUT RELAYS RATED AT 125VAC/1.0A, 24VDC/1.0A
2. CM1 IS SWITCHED TO 33-34 AND CM2 IS SWITCHED TO 35-36, CM3 IS SWITCHED TO 37-38, CM4 IS SWITCHED TO 39-40 WHEN OUTPUT IS ACTIVE.
3. DO NOT USE +24VDC FROM ProControl TO DRIVE OUTPUTS. FOR TRANSDUCER POWER ONLY.

E O S research
159 Walnut Street, Rochester, NH

TYPICAL ProControl TYPE C WIRING
DIGITAL OUTPUTS - RIGHT SIDE

PROCONTROL SERIES *2plus*

PROGRAMMING GUIDE

for use with

ProView for Series *2plus*

Version 2.2x

EOS RESEARCH, LTD.

LIMITED WARRANTY

EOS Research, Ltd. (EOS) warrants its products to be free from defects in materials and workmanship for a period of one year from the date of purchase. Its obligation under this warranty is limited to repairing or replacing, at its sole option, any such defective products. This warranty includes parts and labor. This warranty does not apply to equipment that has been damaged by accident, negligence or misapplication or has been altered or modified in any way.

EXCEPT AS PROVIDED HEREIN, EOS RESEARCH, LTD. MAKES NO WARRANTIES, EXPRESSED OR IMPLIED, INCLUDING WARRANTIES OF MECHANTABILITY AND FITNESS FOR A PARTICULAR PURPOSE. Some states do not permit limitation or exclusion of implied warranties, therefore the aforesaid limitation(s) or exclusion(s) may not apply to the purchaser.

This warranty gives you specific legal rights and you may also have other rights, which vary from state to state.

IMPORTANT SAFETY PRECAUTIONS

Any complex hardware or software may be difficult to document, explain or understand. It is important to consider the consequences of unexpected or abnormal behavior that may be caused by a defect or human failure to comprehend. In order to protect people and property from damage, **a thorough safety analysis should always be performed**. When the consequences of a failure are serious, it is essential to protect life and property against such a failure with redundant backup systems or safety devices. It is agreed between the purchaser and EOS Research, Ltd. that protection against and the consequences of any such failure are entirely the purchaser's responsibility.

This device is not approved for use in life support or medical systems.

As installed, this product may be part of a system that is required to meet various electrical, fire, safety or other codes and regulations. Compliance with these codes is the purchaser's responsibility.

Specifications subject to change without notice.

© 1995-2014 EOS Research, Ltd.

EOS Research, Ltd.
159 Walnut Street
Rochester, NH 03867
Phone: 603.332.2099
Fax: 603.332.2727
procontrol@eosresearch.com

TABLE OF CONTENTS

CHAPTER 1: INTRODUCTION 4

ABOUT THE PROCONTROL SERIES 2^{PLUS} 4
HOW TO USE THIS MANUAL 4
IMPORTANT INFORMATION ABOUT SITE CONFIGURATION FILES 5
ENTERING THE SETUP MENU 5

CHAPTER 2: INPUTS AND OUTPUTS 7

BASE INPUTS 7
EXTENDED INPUTS 11
CONFIGURING THE EXTENDED INPUTS AS ANALOG 13
SPECIAL CASE ANALOG INPUTS 16
CONFIGURING EXTENDED INPUTS AS DISCRETE 16
DISCRETE OUTPUTS 17
EXTENDED OUTPUTS 19
ANALOG OUTPUTS 20
CONTROL ALGORITHMS 21

CHAPTER 3: PROCESS TASKS 22

PROCESS CAPABILITY 22
THE STARTUP SEQUENCE 22
THE SHUTDOWN SEQUENCE 23
MEMORY STATE VARIABLES 23
PROGRAMMING THE PROCESS TASKS 23
PROGRAMMING A PROCESS 25
PROCESSES BASED ON ANALOG INPUTS 28
CREATING A CYCLED OR TIME OF DAY PROCESS 31
PROCESSES INVOLVING MEMORY VARIABLES 32
CHECKING YOUR CONTROL LOGIC 32

CHAPTER 4: ADDITIONAL SETUP FEATURES 34

BOOTUP CONTROL 34
AUTO PASSWORD 35
AUTO STARTUP 35
AUTO PID 35
FOUR SETPOINT LEVELS OPTION 35
P&ID OPTION 35
STATUS AND MEMORY NAMES 36
VARIABLE WATCH 37

CHAPTER 5: CONFIGURING THE PROCONTROL 38

CONFIGURING THE PROCONTROL 38
GETTING THE REMOTE CONFIGURATION 39

CHAPTER 1: INTRODUCTION

This manual provides an introduction to programming the ProControl Series 2^{plus} line of control systems systems using ProView™ software in conjunction with the ProControl system.

ABOUT THE PROCONTROL SERIES 2^{PLUS}

The ProControl Series 2^{plus} is available in a variety of configurations to accommodate up to 40 digital and analog inputs, 30 discrete outputs, and 8 analog outputs. These I/O points can be included as part of simple or complex algorithms to remotely monitor and maintain control of a stand-alone operation. In addition, up to four Series 2^{plus} units can be networked together to expand the system I/O capability or to provide distributed control and I/O around a site. This Programming Guide provides the necessary steps to configure a functional control/telemetry system. The methods used to program a ProControl Series 2^{plus} unit are intuitive and easy to use; however, some experience with industrial control theory, instrumentation, and the typical electrical hardware used in control systems is necessary to correctly configure an operating supervisory control and data acquisition (SCADA) system. The ProControl employs configuration techniques that are significantly different than those used by conventional programmable logic controllers (PLCs). EOS Research has developed this programming interface to allow for rapid system configuration by an experienced user. However, the ProControl cannot make up for mistakes brought on by poorly conceived control logic or improperly specified instrumentation and equipment. ***Users of this manual are therefore encouraged to THOROUGHLY review the control logic programmed into a ProControl Series 2^{plus} unit prior to testing the controller in a full-scale equipment configuration***.

You should have thoroughly reviewed the ProControl User Manual and be familiar with all features of the ProView software before proceeding further.

HOW TO USE THIS MANUAL

This manual is organized in the order of the steps to be performed in configuring a typical ProControl system. Certain steps can be bypassed if one or more types of I/O (e.g., analog outputs) are not in use with your system configuration. We strongly recommend completing your system configuration in the following order:

1. Define the inputs and outputs the ProControl will monitor and/or control (Chapter 2). I/O points must be assigned names (called ***tagnames***), and parameters such as ranges, normally open/normally closed status, and appearance on the screen must be specified.

2. Program ***Process Tasks***, which describe the control algorithms that govern the operation of your control system (Chapter 3). You will construct a series of Boolean logic (IF - THEN) statements using a point-and-click procedure, and specify delays, alarm and reporting tasks.

3. Set up special features such as automatic startup at power-up, and process diagrams (Chapter 4).

4. Save and download your site configuration to the ProControl unit and test your control configuration (Chapter 5).

IMPORTANT INFORMATION ABOUT SITE CONFIGURATION FILES

Each ProControl Series 2^{plus} you receive will be provided with a "generic" ***site configuration file*** with a **.pvs** extension (for ProView site). This generic site file contains important information about your ProControl, specifically its serial number, unit type and input calibration factors. This file must be used as a basis for configuring your Series 2^{plus} unit.

If you wish to configure a ProControl unit with the same (or substantially similar) configuration to one that you have previously worked with, there is a utility in ProView that can transfer relevant configuration information to a site file with a different serial number. Contact EOS Research technical support staff to see if this is feasible for the unit you have purchased.

ENTERING THE SETUP MENU

The **Setup** menu on the menu bar in ProView provides access to all of the site configuration information. This menu is usually hidden to prevent unauthorized access to important programming information, so you must first make it visible before configuring. Open your .pvs site file first.

1. Position the mouse pointer over the panel shown below near the bottom of the main ProView screen.

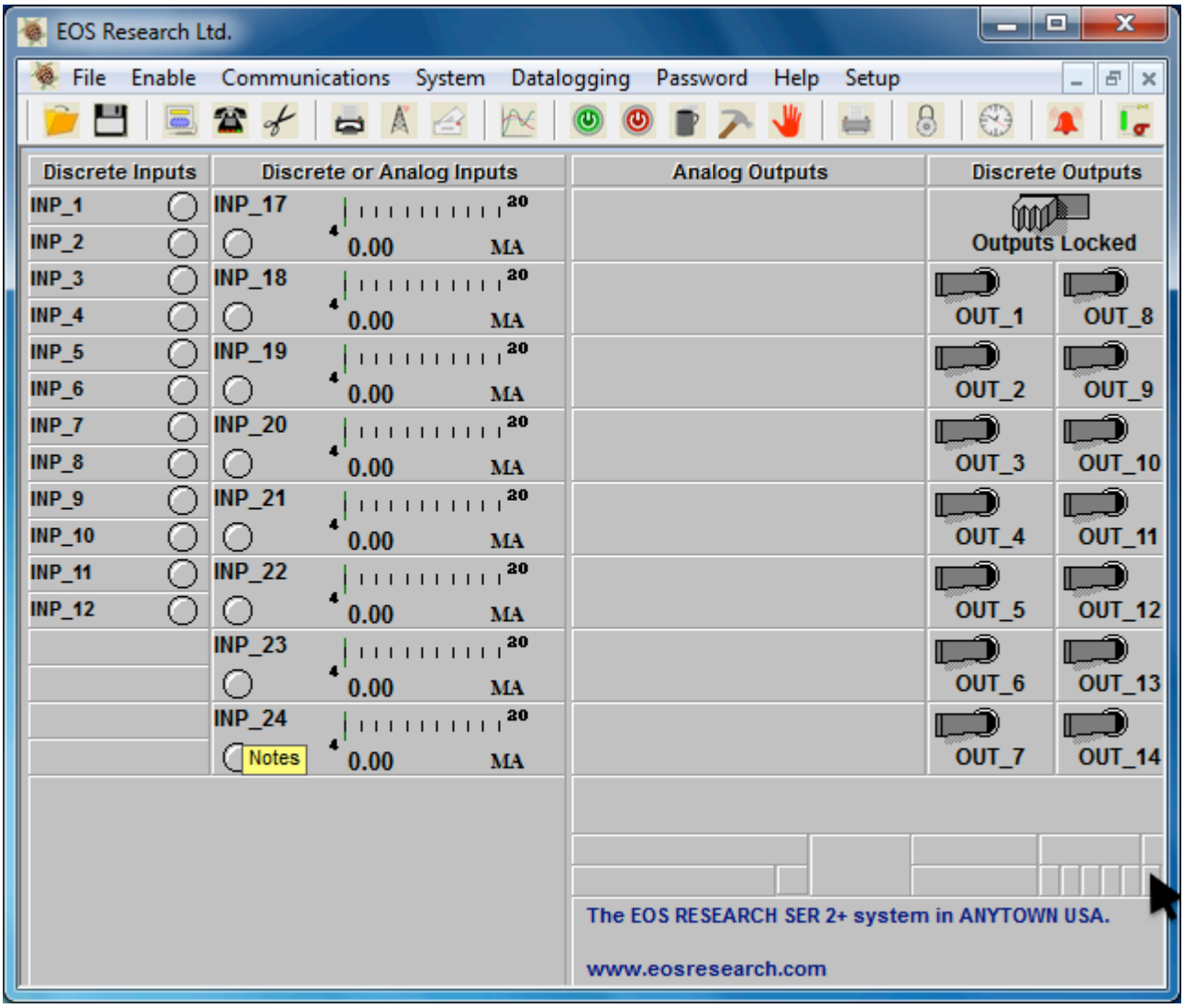

2. Press and hold the **<CTRL>**, **<SHIFT>** and **<ALT>** keys simultaneously.

3. Click the *right* button on your mouse.

The **Setup** menu should now appear in the menu bar just to the right of the **Help** menu. If it does not, repeat the sequence. If after repeating the sequence, the menu still does not appear, be sure that your right mouse button has not been configured to behave as a "double-click" or other mouse button function.

See your mouse driver software for details to reconfigure the mouse button functions.

CHAPTER 2: INPUTS AND OUTPUTS

This chapter discusses how to configure the inputs and outputs (I/O) of your ProControl to work with the with the devices you are connecting to them. Remember that each input and output location in ProView corresponds to a terminal on the ProControl unit, so you must wire your circuits accordingly. accordingly. Be sure you have configured all of your I/O before proceeding with control logic.

BASE INPUTS

The ***base inputs*** are the first 16 digital inputs, terminals for which are found on the left hand side of the ProControl. See the *ProControl User Manual* for the terminal designations of your particular model.

Recall from the *ProControl User Manual* that the ***active state***, as it pertains to discrete inputs, is the opposite of its "normal" state. For example, a Normally Open switch is ***active*** when it is Closed. When a digital input becomes active, it is usually used to initiate a control action.

To configure the base inputs, select the **Base Inputs** menu item from the **Setup** menu as shown below.

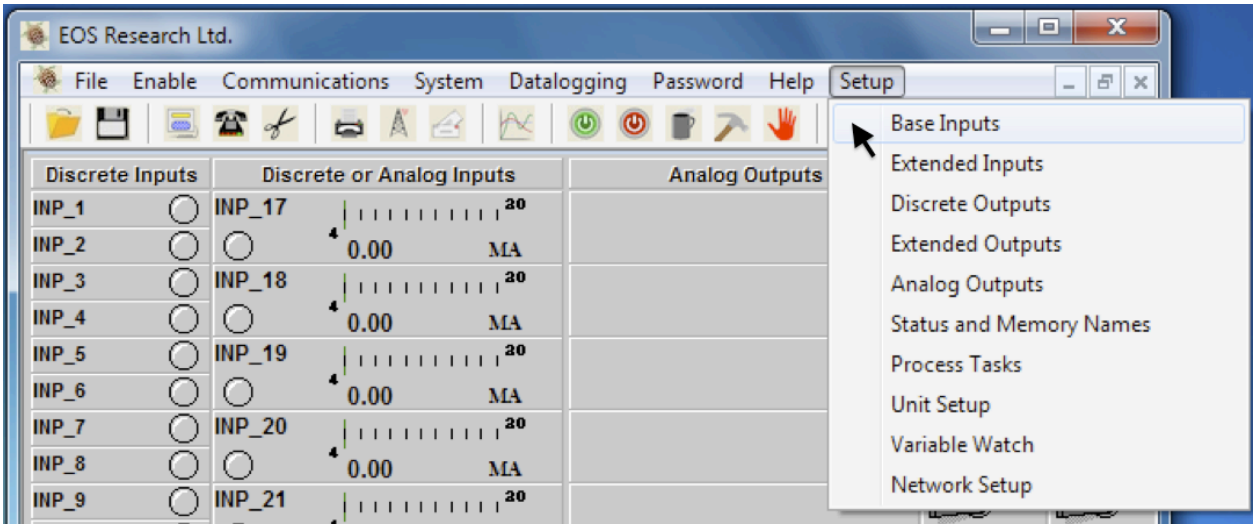

The **Input Setup** dialog box will appear and display information about the 16 base inputs.

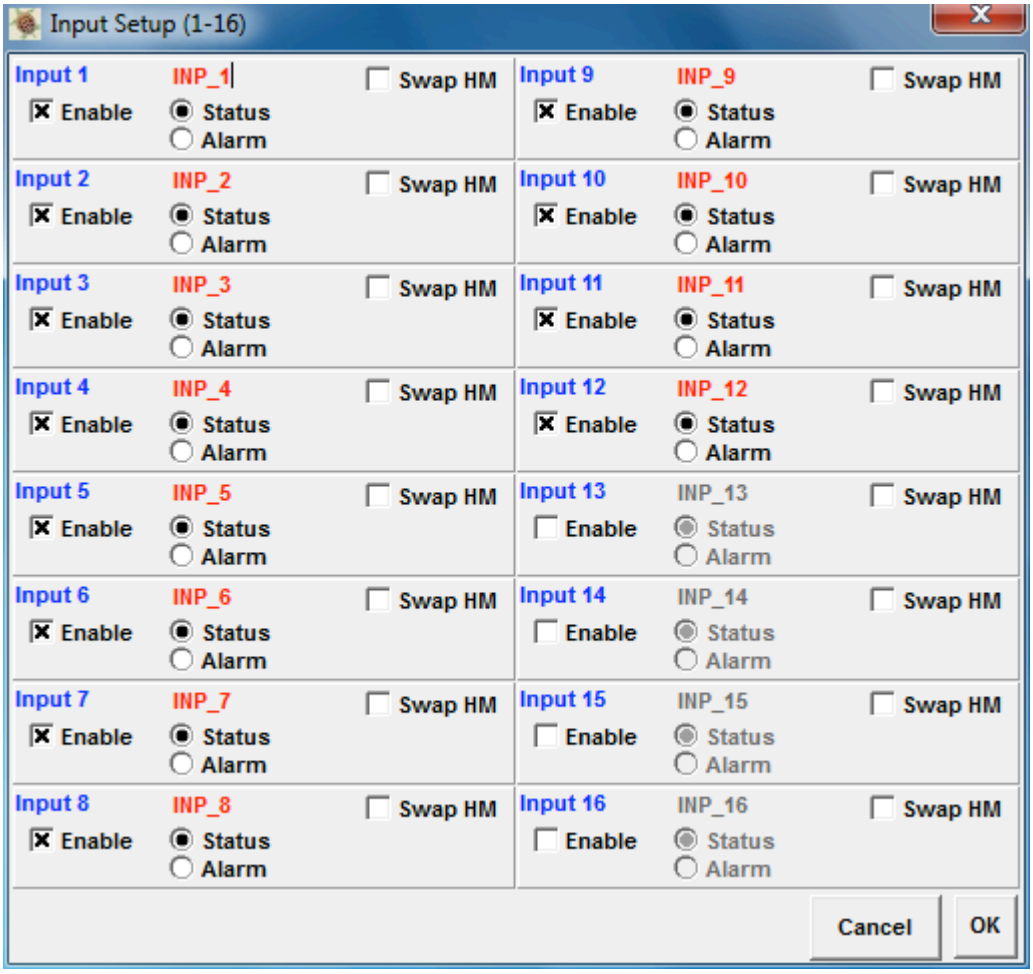

Each input panel has several parameters that indicate how this input will behave. In order to activate an input for use with your particular configuration, click on the **Enable** check box. When an input is ***Enabled***, the ProControl and ProView can recognize the input and use it for datalogging, control, etc. *If the ProControl you are configuring has fewer than 16 discrete inputs, not all of these input panels would be applicable.*

Base Input Parameter	Description
Enable	Checked to enable an input
Status	Selected to show a green LED on the ProView screen when the input is active
Alarm	Selected to show a red alarm bell on the ProView screen when the input is active
Swap Hour Meter (HM)	Selected to invert the behavior of the ProControl's hour meter function - ON and OFF times will be reversed

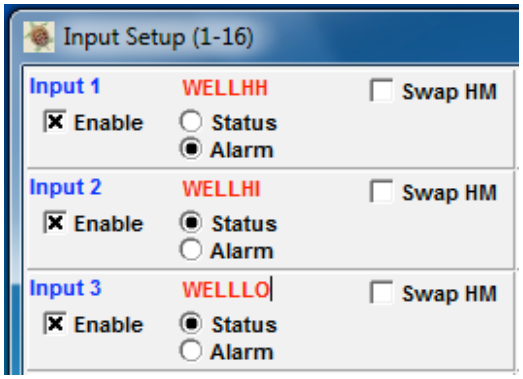

1. Once you have enabled the input, you can edit the ***tagname*** of the input by clicking on the name that appears in the center of the panel (i.e., WELLHH). Six characters are allowed (A-Z, 0-9, _).
2. To the left are shown three enabled base inputs. Two of the inputs are ***Status*** inputs and the other is an ***Alarm*** input. The first input, an emergency high level in a well, has been configured as an alarm input. The other two inputs, which are high and low level switches controlling the operation of a pump, are designated as status (green LED in the active state).

The designation of an input as either Status or Alarm is only a cosmetic distinction. It does not affect the functioning of the input or the process control operation of the ProControl.

You must open the **Input Format** dialog box to set additional parameters which affect the function of the discrete inputs. Place the mouse pointer to the right of the input's tagname (or anywhere outside of the tagname field) and click the left mouse button.

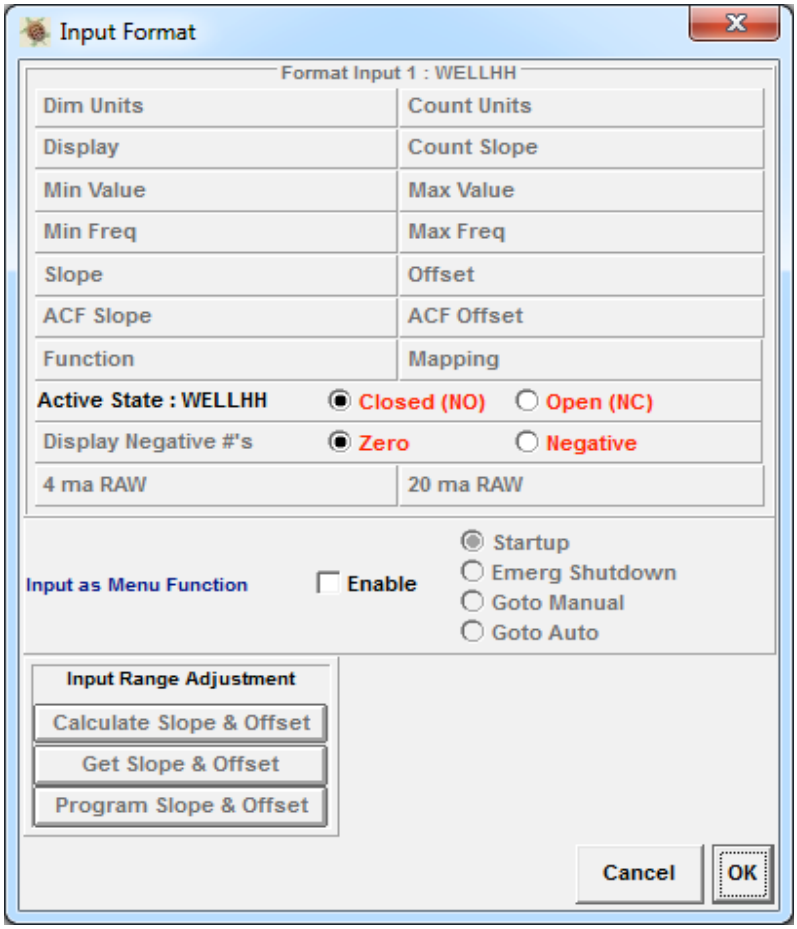

Most of the parameters contained in the Input Format window will be grayed out because they are not applicable to discrete inputs. By default, discrete inputs are configured as standard inputs for use with process control, such as the three discrete inputs in the example above. However, they can also be configured to perform any one of several available ***Menu Functions***.

Menu Functions are used to duplicate the action that would occur if a user pressed a key on the ProControl keypad or clicked on a special function icon in ProView. An input can also be declared as a ***Lamp Test Input*** as described below.

Discrete inputs can be configured for use with process control and to perform Menu Functions simultaneously. Menu Functions are simple control operations that run both in Manual Mode and in Auto Mode.

Input Format Parameter	Description
Normally Open (NO)	An input whose circuit is open during normal system operation.
Normally Closed (NC)	An input whose circuit is closed during normal system operation.
Lamp Test Input	An input that will illuminate certain designated outputs when placed into its active state (those outputs which have been declared as Lamp Test Outputs).
Menu Function - Startup	An input that will initiate the ***Startup*** sequence when placed into its active state, then place the ProControl into ***Auto*** mode.
Menu Function - Emergency Shutdown	An input that will initiate an ***Emergency Shutdown*** when placed into its active state, then place the ProControl into ***Manual*** mode.
Menu Function - Goto Auto	An input that will place the ProControl in ***Auto*** mode when placed into its active state.
Menu Function - Goto Manual	An input that will place the ProControl in ***Manual*** mode when placed into its active state.

1. Each discrete input must be declared as Normally Closed or Normally Open.

2. Click on **Lamp Test Input** to use the input for illuminating all discrete outputs configured as lamps. *If you are using a discrete input only as a standard input, be sure that you have the radio button "Test Disabled" selected.*

3. To configure an input as a **Menu Function** input, check the **Enable** box and select the appropriate check box as shown. For example, a RESET button can be configured to perform a system Startup or an E-Stop button can be configured to trigger an Emergency Shutdown.

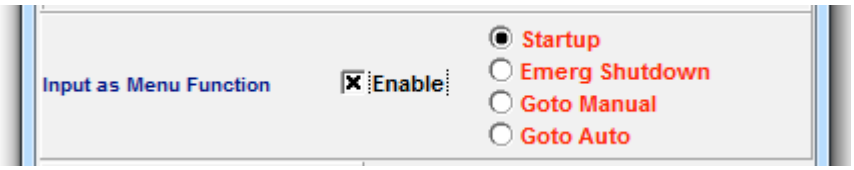

EXTENDED INPUTS

The ***Extended Inputs*** are the next 16 input channels (17-32) on the ProControl. *If the ProControl you are configuring has fewer than 16 extended inputs, not all of these input panels would be applicable.*

Series 2plus Unit	Number of Extended Inputs Available	Type of Input
C1	2	2 configured as Analog or Discrete
C2	2	2 configured as Analog or Discrete
B1	8	8 configured as Analog or Discrete
B2	16	The first 10 inputs (17-26) can be configured as Analog or Discrete. The remaining six inputs (27-32) are Discrete only (optically isolated inputs). If inputs 25 and/or 26 are configured as analog (corresponding to terminals 15 and 16 on the ProControl), the first two isolated discrete inputs (terminals 25 and 26 on the ProControl) are not available.
A1	16	16 configured as Analog or Discrete
A2	16	16 configured as Analog or Discrete

To configure the Extended Inputs, select the menu item as shown below.

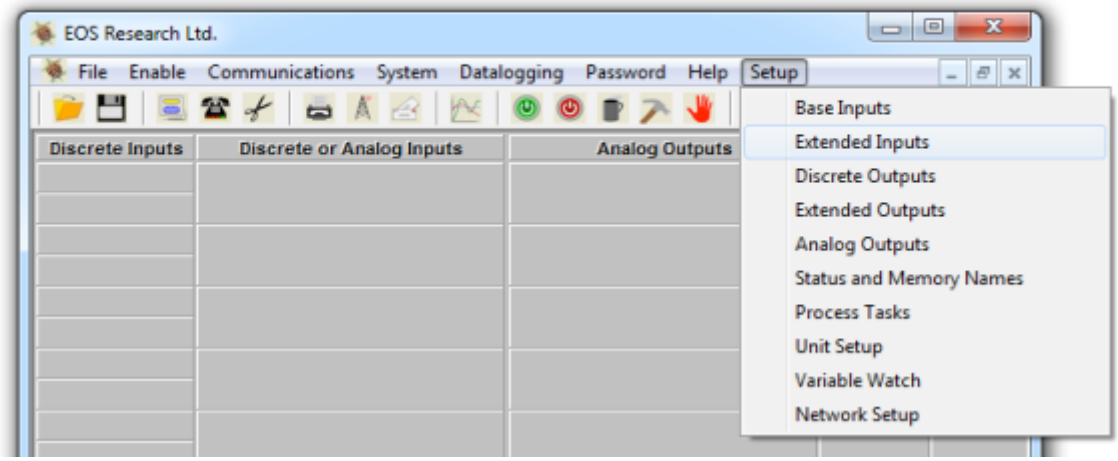

The **Input Setup (17-32)** dialog box will be displayed.

The following table outlines the configuration parameters for the Extended Inputs:

Extended Input Parameter	Description
Enable	Check to enable the input
Status	Selected to show a green LED on the ProView screen when the input is active
Alarm	Selected to show a red alarm bell on the ProView screen when the input is active
Discrete	Select when the input will be used as a discrete input
Analog	Select when the input will be used as an analog input
Pulse Flow	Select when an input is a digital flow meter or pulse accumulator (the device will be wired to a corresponding ***base input*** – input 17 is wired to base input 9, input 18 to base input 10, etc.)
Totalizer	Check when the input should also maintain a cumulative total
Accumulator	Check when the input will be used to accumulate totals from a pulsing discrete input, but the pulse frequency is insufficient to provide rate information.

Configuring the Extended Inputs as Analog

*Before proceeding, be sure you understand the concept of **Active State** as discussed in the ProControl User Manual. Recall from the User Manual that an analog input can have one of two possible active state configurations. An **Endpoint** configured input will be in an active state if the input is above the high alarm setpoint or below the low alarm setpoint. A **Window** configured input (rare) will be in an alarm state if the input is between the high and low alarm setpoints.*

1. Enable the appropriate input by clicking the **Enable** check box beneath the number of the input panel, and edit the tagname.

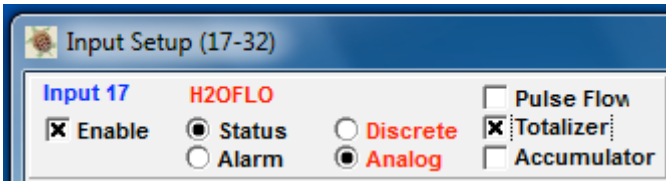

2. Select the **Analog** check box and select either the **Alarm** or **Status** type of input. Inputs configured as **Alarm** will show a red bell and **Status** inputs will show a green LED when in an active state. The LED will remain gray while the input remains in its inactive state (normal range). *The designation of an input as either Status or Alarm is only a cosmetic distinction. It does not affect the functioning of the input or the process control operation of the ProControl.*

3. Select the **Totalizer** option if the input is to maintain a cumulative total. This is most often used for flow meters. With the Totalizer option selected, the ProControl will maintain a total in the same units as the rate of the input (e.g., gallons from GPM, cubic meters from CMS (m^3/s)).

4. Select the **Pulse Flow** option if the input device transmits data in the form of ON-OFF pulses instead of a continuous 4-20mA signal. The pulse will vary in frequency in relation to the rate of the parameter being measured. *With the Pulse Flow option, the input signal is connected to discrete input terminals (9-12 on the A1, A2 and B1; 9-14 on the B2; 9-10 on the C) while the signal value is shown on corresponding analog inputs 17-22. The maximum frequency that can be used is either 200Hz or 500Hz. See the ProControl User Manual for details.*

5. Select the **Accumulator** option if the input device periodically transmits totalized information with a **single** ON-OFF pulse. The pulse will represent a fixed value such a one gallon of flow or one hour of operation. A click on the Accumulator check box will automatically select the Pulse Flow and Totalizer check boxes. *Do not de-select these options, all three are necessary for proper Accumulator operation. With the Accumulator option, the input signal is connected to discrete input terminals (9-12 on the A1, A2 and B1; 9-14 on the B2; 9-10 on the C) while the signal value is shown on corresponding analog inputs 17-22.*

As with the Base Inputs you must open the **Input Format** dialog box to set additional parameters that affect the function of the Extended Inputs. Place the cursor to the right of the input's tagname (or anywhere outside of the tagname field) and click the left mouse button.

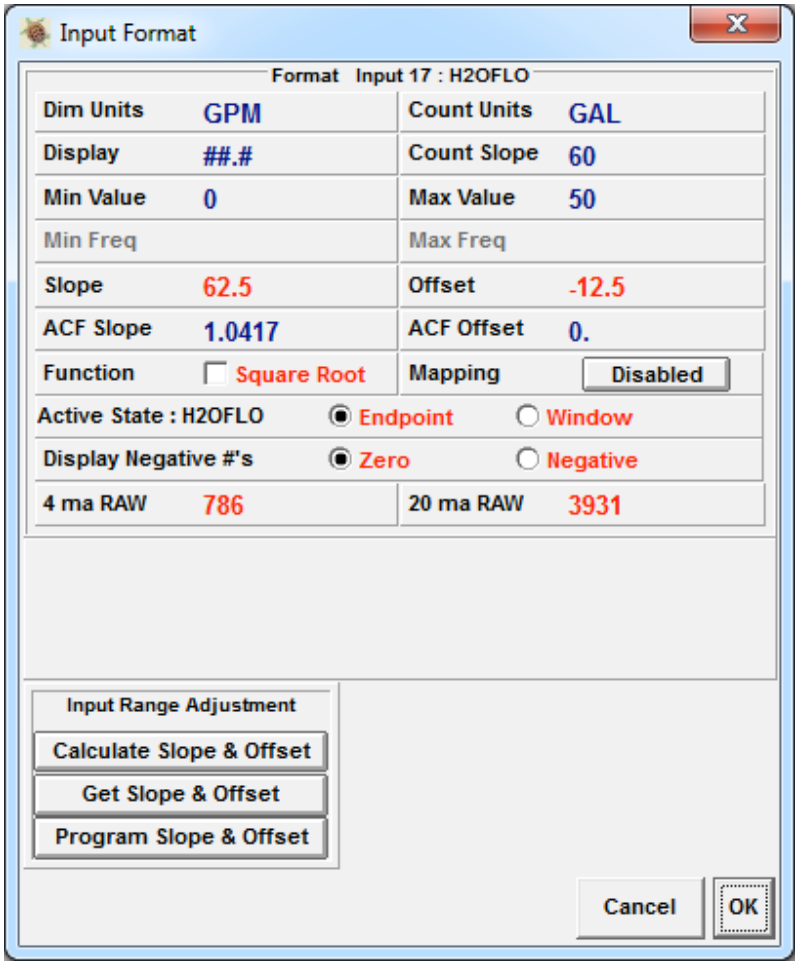

Some of the information contained in the Input Format window may be grayed out depending on the type of input options selected.

Count Units and **Count Slope** are used only for those inputs with the Totalizer option selected.

Min Freq (Minimum Frequency) and **Max Freq** (Maximum Frequency) are used only for those inputs with the Pulse Flow or Accumulator options selected.

Mapping and **Square Root** are available only for those Extended Inputs declared as Analog Inputs.

The table below contains a brief description of the input format fields pertaining to analog Extended Inputs.

Input Format Parameter	Description
Dim Units	3-character representation of input's dimensional units
Count Units	3-character representation of units of volume being totalized
Display	Symbolic representation of display format
Count Slope	Scaling factor used to relate rate units of input to total volumetric units
Min Value	Minimum input value (value @ 4 mA)
Max Value	Maximum input value (value @ 20 mA)
Min Freq	Minimum input frequency (pulse rate @ Min value)
Max Freq	Maximum input frequency (pulse rate @ Max value)
Slope	Computed, read-only value based on all Min/Max information
Offset	Computed, read-only value based on all Min/Max information
ACF Slope	Analog Correction Factor - slope factor for use on raw analog value (factory calibrated – **DO NOT ATTEMPT TO MODIFY!**)
ACF Offset	Analog Correction Factor - offset factor for use on raw analog value (factory calibrated – **DO NOT ATTEMPT TO MODIFY!**)
Square Root	Select to perform a square root extraction on the 4-20 mA reading

Mapping	Can be used to duplicate the reading from another extended input
Active State Endpoint	Creates two active zones: above high setpoint and below low setpoint
Active State Window	Creates one active zone: between high/low setpoints
Display Negative #'s Zero	Clamps all inputs less than 4 mA to read 0
Display Negative #'s Negative	Allows input value to be displayed as a negative number
4 mA RAW	12-bit reading gathered during 4 mA calibration – **NOT ADJUSTABLE**
20 mA RAW	12-bit reading gathered during 20 mA calibration – **NOT ADJUSTABLE**

1. Type in the **Dimensional Units** and **Count Units** (for totalizers only) as a 3-character representation of the units associated with this input.

2. The **Display** parameter allows you to select the precision with which analog values will be presented. *If you will be using negative inputs (for example, vacuum transmitters or ORP transmitters), be sure to allocate one additional display character to the left of the decimal for the minus (-) sign.*

3. The **Min/Max Values** define the range of the transmitter being used and are used to compute the Slope and Offset when you click the **Compute Slope and Offset** button.

4. The **Count Slope** is used to appropriately scale the totalizer value and should be set to a specific number of seconds depending on the rate units of the input. If the input is measuring a quantity on a per minute basis (such as GPM), the count slope should be set to 60 seconds. If the input is measuring a quantity on a per second basis (such as CMS), the count slope should be set to 1 second.

5. The Analog Correction Factors must not be modified. These represent factory calibrations that will ensure the greatest degree of accuracy from your analog inputs.

6. Choose the **Square Root** function if you want the ProControl to perform a square root extraction on the raw 4-20 mA reading. The ProControl will automatically extrapolate between the Min Value and Max Value that you specify.

7. **Mapping** is normally disabled. If you wish to duplicate the value of an existing input, click on the **Disabled** button until the input number you wish to reproduce is displayed. This is often used to obtain more than four alarm levels on one input.

8. The **Active State** should be selected depending on how you want the active range of this input to be interpreted. This selection is almost always **Endpoint**.

9. **Display Negative #'s** is usually set to **Zero**. The Zero option clamps the input to a value of zero, should less than 4 mA be measured on the channel from an uncalibrated or faulty transmitter. If negative numbers must be displayed (such as for ORP or vacuum), then the **Negative** option must be selected.

10. ***Please do not attempt to modify input channel calibrations.*** This can cause serious errors in the interpretation of analog input values.

Special Case Analog Inputs

In the case of a pulsing device, the **Min/Max Frequencies** must be set to correspond with the **Min/Max Values** of the input. For example, if a pulse output flow meter is designed to output 0-40 Hz and be used with a range of 0-10 GPM, set the Min Freq to 0 Hz and the Max Freq to 40 Hz. If the minimum frequency is specified as some value other than 0 Hz, be sure that the device is in fact transmitting this minimum frequency when there is no flow.

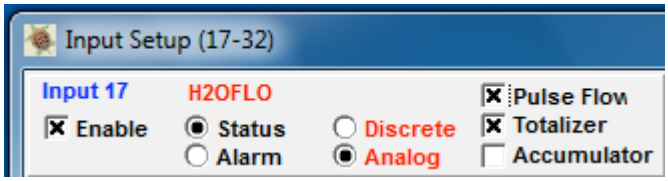

A pulse Accumulator outputs a single pulse for a certain volume of flow. For this special case, you will only be setting the **Count Units** and the **Min/Max Values**. The Min Value is 0 (no pulses), and the Max Value is the volume that flows through the device for each pulse (e.g., 10 gallons per pulse).

Configuring Extended Inputs as Discrete

1. Enable the appropriate input by clicking the **Enable** check box beneath the number of the input panel.
2. Make sure the check box that reads **Discrete** is selected and select either the **Alarm** or **Status** type of input. Configuring these inputs as discrete is identical to the setup of the Base Inputs. *Please see the ProControl User Manual for information on proper wiring for an extended input used as discrete.*

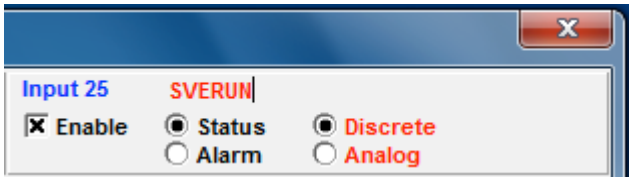

DISCRETE OUTPUTS

The **Discrete Outputs** consist of up to 14 output channels on the bottom row of terminals on the right hand side of the ProControl.

To configure the Discrete Outputs, select the appropriate menu item as shown below.

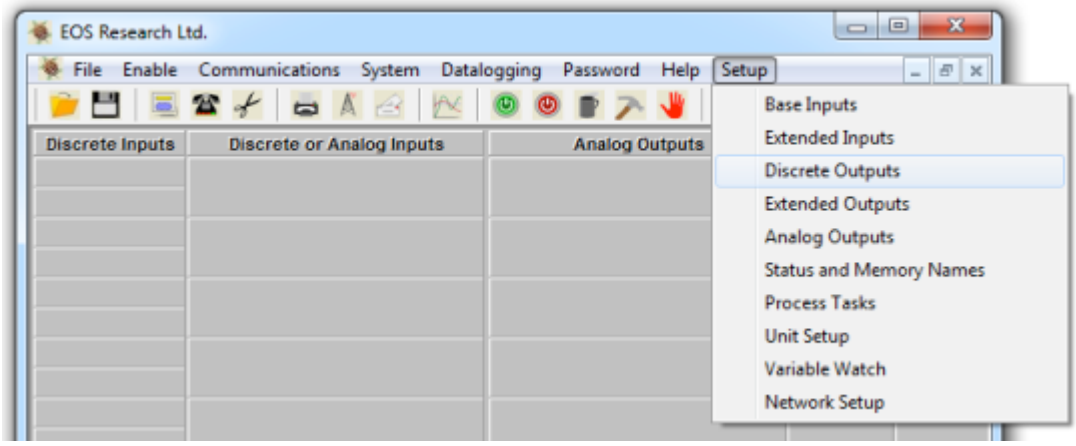

You will then see the **Output Setup** dialog box.

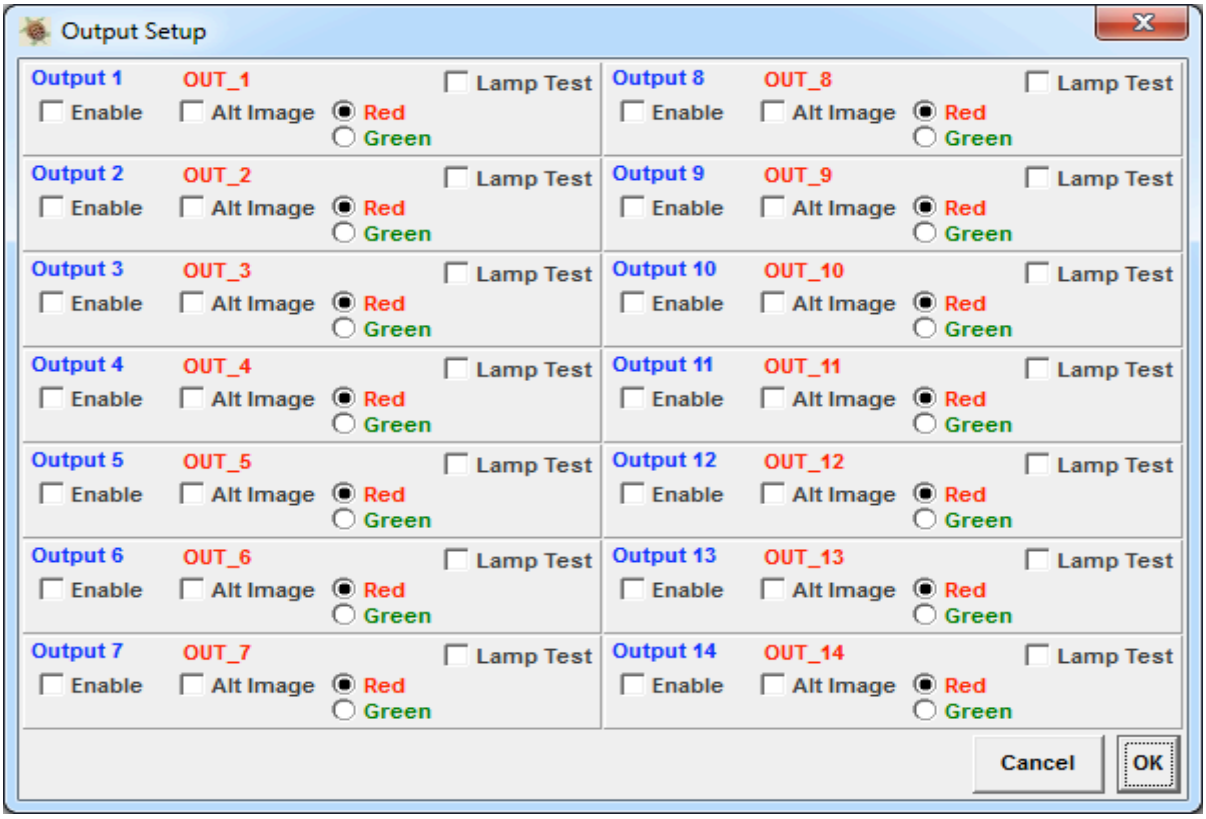

Output Setup Parameter	Description
Enable	Check to enable an output
Alt Image	Check to enable the alternate lamp/button images for the output
Red	Gray/Red Alarm Lamp
Green	Gray/Green Run Lamp
Lamp Test	Check to define output as a lamp. This will cause the lamp to light when a lamp test is executed.

1. Click the **Enable** check box to activate a discrete output, and edit the tagname. Please note that Output 1 corresponds to terminal 33 on the ProControl, Output 2 to terminal 34, and so on.

2. By default, the discrete outputs are displayed as a "switch" symbol that turns green when the output is activated and is gray when the output is deactivated. The ***alternate images*** that can be used are lamp or button images that can be displayed as red when active or green when active. In both cases, the lamp will be gray when the output is deactivated. Examples appear below.

Default Alternate (Red) Alternate (Green)

3. Check **Lamp Test** to designate an output as a lamp to be used in association with the lamp test input. If you have an input designated as a lamp test input (typically a momentary pushbutton) and it is placed into its active state, all lamp outputs will be illuminated while the associated input is active. In addition, any active output defined as a lamp will remain illuminated in the event of a Startup Failure or Shutdown Failure that results in a modified Emergency Shutdown.

*Do not be concerned if the array of switches and lamps does not appear correct on the main ProView screen immediately after you have set up the outputs. They will appear correctly the next time you open the site file (provided you **Save** it first).*

EXTENDED OUTPUTS

The **Extended Outputs** consist of up to 16 relay output channels resident on the upper row of terminals on the right-hand side of the ProControl unit (Type A models only).

To configure the Extended Outputs, select the appropriate menu item as shown below.

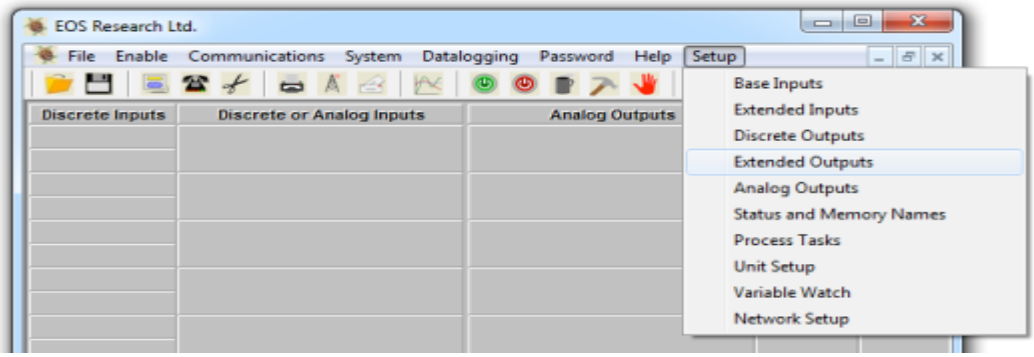

You will then see the **Extended Output Setup** dialog box.

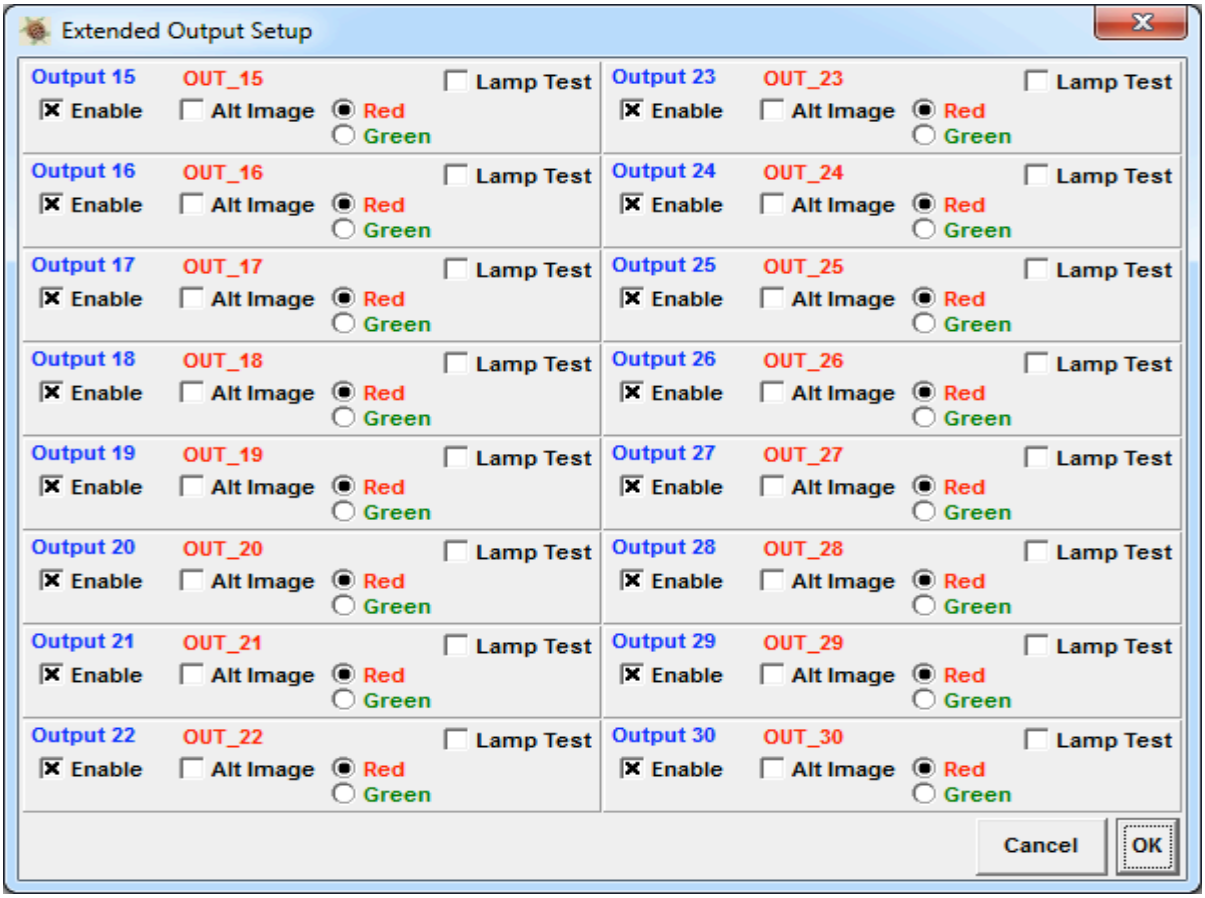

Activate the appropriate output by clicking the **Enable** check box beneath the number of the output panel. Configuration of Extended Outputs is otherwise identical to regular Discrete Outputs.

ANALOG OUTPUTS

The **Analog Outputs** consist of up to 8 channels available on some ProControls. These outputs each provide a 4-20 mA signal to be used with variable-rate control devices such as variable-frequency motor drives, temperature controllers, and chemical metering pumps.

To configure the analog outputs, select the appropriate menu item as shown below.

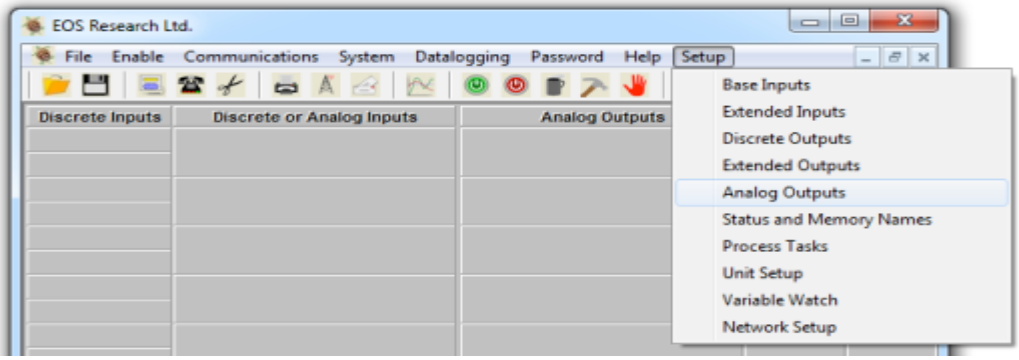

You will then see the **Analog Output Setup** screen.

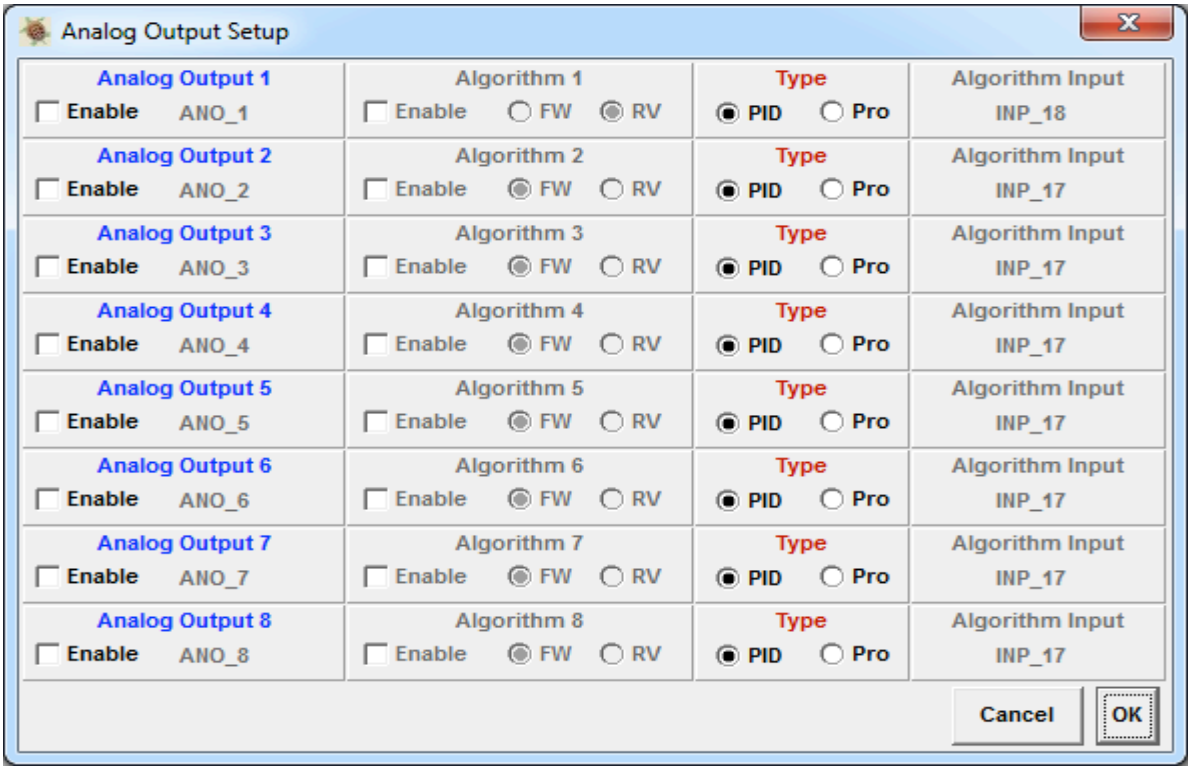

To activate an analog output, click the **Enable** check box in the appropriate Analog Output panel. You can then edit the tagname of the analog output.

Control Algorithms

1. If you would like the analog output value to respond to changes in the value of an analog *input*, click the **Enable** check box in the appropriate **Algorithm** panel.

2. In the **Type** panel, select the algorithm you wish to employ (**PID** or **PRO**).

   - A **PID** (Proportional-Integral-Derivative) Loop is a feedback-based control loop that maintains an analog input at a user-defined ***Setpoint***. The ProControl automatically adjusts the analog output using a mathematical formula that includes ***Gains*** for the proportional, integral and derivative terms. PID control is a commonly used process control technique, descriptions of which can be found in most control theory texts. ***Be sure you fully understand PID control concepts before employing this type of control algorithm.*** For help in choosing appropriate gains for your process, contact EOS Research technical support.

   - A **PRO** (Open-loop Proportional) algorithm generates an analog output signal that is directly proportional to the value of an analog input. The analog output percentage is computed by multiplying a constant of proportionality (gain) by the input's percentage of full-scale.

3. In the **Algorithm Input** panel, use the arrows to select the analog input that will be used to vary the analog output.

4. You must also select the direction of the algorithm (**FW** or **RV**). **FW** is used for a control algorithm in which an increase in the analog output *increases* the value of the associated analog input. **RV** is used for algorithms in which an increase in the analog output is accompanied by a *decrease* in the associated input.

Some examples of PID and Proportional control loops:

The pH of a solution is maintained using PID control. The process pH is monitored using a pH transmitter (analog input), and the rate of a chemical metering pump (analog output) is automatically varied to adjust the amount of sulfuric acid added to the solution. Because an *increase* in metering pump rate causes a *decrease* in the pH, the algorithm should be configured for the *reverse* (RV) direction.

Chlorine is being added to a water stream at a rate proportional to the flow through a pipe (analog input) using a variable-rate metering pump (analog output). If the flow meter has a range of 0 to 125 gpm, and you would like the metering pump to be running at its maximum rate when the flow rate is 125 gpm, use a proportional gain of 100%. If you would like the metering pump to run at only 50% of its full range when the flow is 125 gpm, use a proportional gain of 50%. *Note that PID gains and proportional gain are not fixed in the control program; rather, they can be adjusted by the end user*.

CHAPTER 3: PROCESS TASKS

This chapter explains how to program the ***Process Tasks*** to safely control your operation.

PROCESS CAPABILITY

When the ProControl is placed in **Auto** mode, it will automatically execute process tasks that are based on Boolean logic. Up to 64 separate tasks can be programmed. Each process task is set up as a logical statement of the form, IF ___ AND ___ THEN ____. There is no "OR" condition in ProControl logic. If your logic statements require the use of an "OR", you will need to create multiple processes, one for each set of "AND"-connected arguments. The ProControl continuously scans each of the programmed process tasks to see if the appropriate input conditions are satisfied to execute the process. In this ***event-driven process control***, the process task is executed *once* if the conditions are satisfied. If a process task turns an output *on* (e.g., pump, alarm light, etc.), a separate process task will be required to turn that output *off*.

Each process task:

- Can be dependent on any combination of the states of all inputs, outputs, and memory state variables
- Can cycle outputs for specific time intervals at a frequency as low as once a minute
- Can cycle outputs at specific times of the day
- Can trigger a system shutdown
- Can trigger generation of an alarm email or fax report
- Can trigger text message or pager alerts with individually definable messages
- Can be delayed by an interval of 1 second to 10 hours
- Can require an input condition to be active for 1 second to 10 hours before executing a task
- Can initiate an action based on analog input High, Low, High-high and Low-low active states

There are 32 base process tasks available (16 for Type C1). An additional 32 process tasks (16 for Type C1) can be used as part of two sequential algorithms: the ***Startup Sequence*** (processes 33-48) and the ***Shutdown Sequence*** (processes 49-64). Any process task in the startup sequence and the shutdown sequence can be converted to a normal process task to function in a non-sequential mode.

The Startup Sequence

The Startup Sequence, as the name implies, runs up to 16 processes *sequentially* until all enabled startup processes have been successfully completed (8 for Type C1). Once completed, the ProControl proceeds into Auto mode.

The startup processes are programmed just like other processes but will be executed only *once*, and will be executed *in numerical order*. The process **Time Out** variable defines the number of seconds to wait on any unsatisfied startup process condition before failing and abandoning the startup sequence. If abandoned, the ProControl will perform a modified emergency shutdown, leaving on only the outputs defined as lamps. Note that if a startup sequence is executed from Manual mode, startup failure will result in the ProControl reverting to Manual mode, in which no process control occurs.

A typical startup sequence may include steps that turn off alarm lamps, reset memory variables (see below), and start up certain equipment. Delays between starting up different motor-driven equipment are often recommended to prevent problems associated with excessive current draw when several motors are started simultaneously.

The Shutdown Sequence

The shutdown sequence runs up to 16 processes *sequentially* until all enabled shutdown processes have been successfully completed (8 for Type C1). Once completed, the ProControl proceeds into Manual mode.

The shutdown processes are programmed just like other processes but will be executed only *once*, and will be executed *in numerical order*. The process **Time Out** variable defines the number of seconds to wait on any unsatisfied shutdown process condition before failing and abandoning the shutdown sequence. If abandoned, the ProControl will perform a modified emergency shutdown, leaving on only the outputs defined as lamps.

Memory State Variables

In some cases, you may need a link between two or more processes that require some way of letting one process know that the other has already run. Commonly called a flag, register or placeholder, ***Memory Variables*** act like discrete outputs but have no physical connection to the outside world. Each process can be based on the states of any of 16 available memory variables.

PROGRAMMING THE PROCESS TASKS

To begin programming the process tasks it is necessary to have first completely configured your system inputs and outputs as outlined in Chapter 2.

To enter the process tasks setup, pull down the **Process Tasks** menu as shown below.

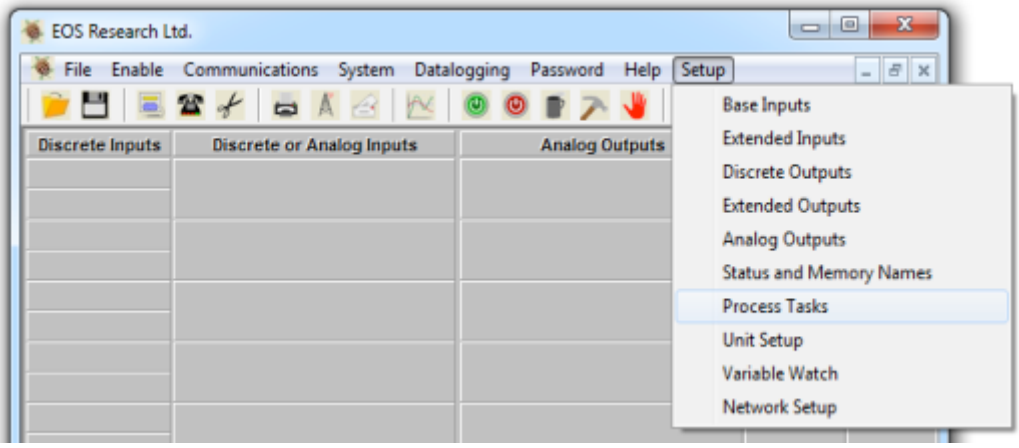

You will see the **Process Tasks** main screen as shown below.

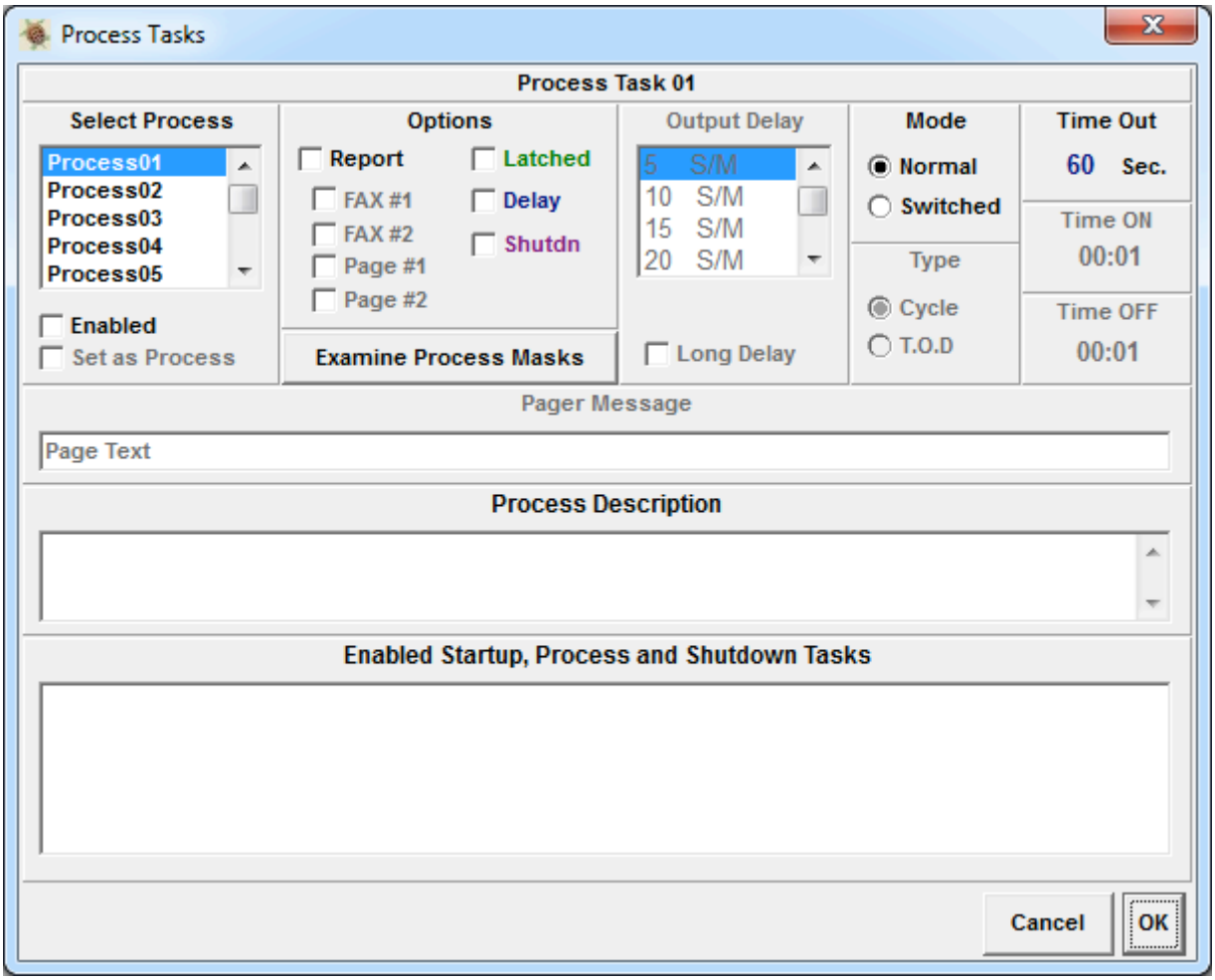

Process Item	Brief Description
Enabled	Check to enable a selected process
Set as Process	Check to convert a startup/shutdown process into a standard process
Report	Check to have process trigger any type of alarm report
Fax #1,#2; Page #1,#2	Check individual boxes to select which fax machines or text message/pager services will receive alarm report. Email reporting is enabled if at least one of the Page #'s is selected
Delay	Check to institute delay on: switching of outputs (Latched), input condition (Unlatched)
Latched	Check to latch input condition and immediately start delay (paired w/ Delay)
Shutdn	Check to have process trigger Shutdown sequence
Output Delay	Select appropriate delay from list box (1 Sec - 10 Hours)
Long Delay	Check to switch duration to minutes or hours instead of seconds or minutes
Mode	Select to define process as Normal or Switched (Cycled or T.O.D.)
Type	For a Switched process, select between cycled outputs (Cycle) or outputs switched on a time of day schedule (T.O.D.)

Time Out	Time period to check unsatisfied input condition in startup/shutdown sequence
Time On/Start Time	For Cycled Outputs, length of time for outputs to remain on For T.O.D. schedule, time to turn an output on
Time Off/Stop Time	For Cycled Outputs, length of time for outputs to remain off For T.O.D. schedule, time to turn an output off
Pager Message	For reported processes, message that will be transmitted to a cell phone or pager, and as a descriptive text block in an email

Programming a Process

To program a process:

1. Select a process to be programmed in the **Select Process** panel by clicking on it

2. Enable a process task by clicking the **Enabled** box in the Select Process panel.

3. If you wish to change the **Mode** of the process, click the **Switched** box; for switched processes choose the **Type** (**Cycle** or **Time Of Day**), and relevant times (**Time ON** or **Time OFF**) if applicable. *Note that the Time ON and Time OFF can also be changed by the end user through* **Output Options** *in ProView. You can only change these values in the Process Tasks window if you are currently connected to the ProControl unit.*

4. Click the **Examine Process Masks** button to reach the **Process Masks** window:

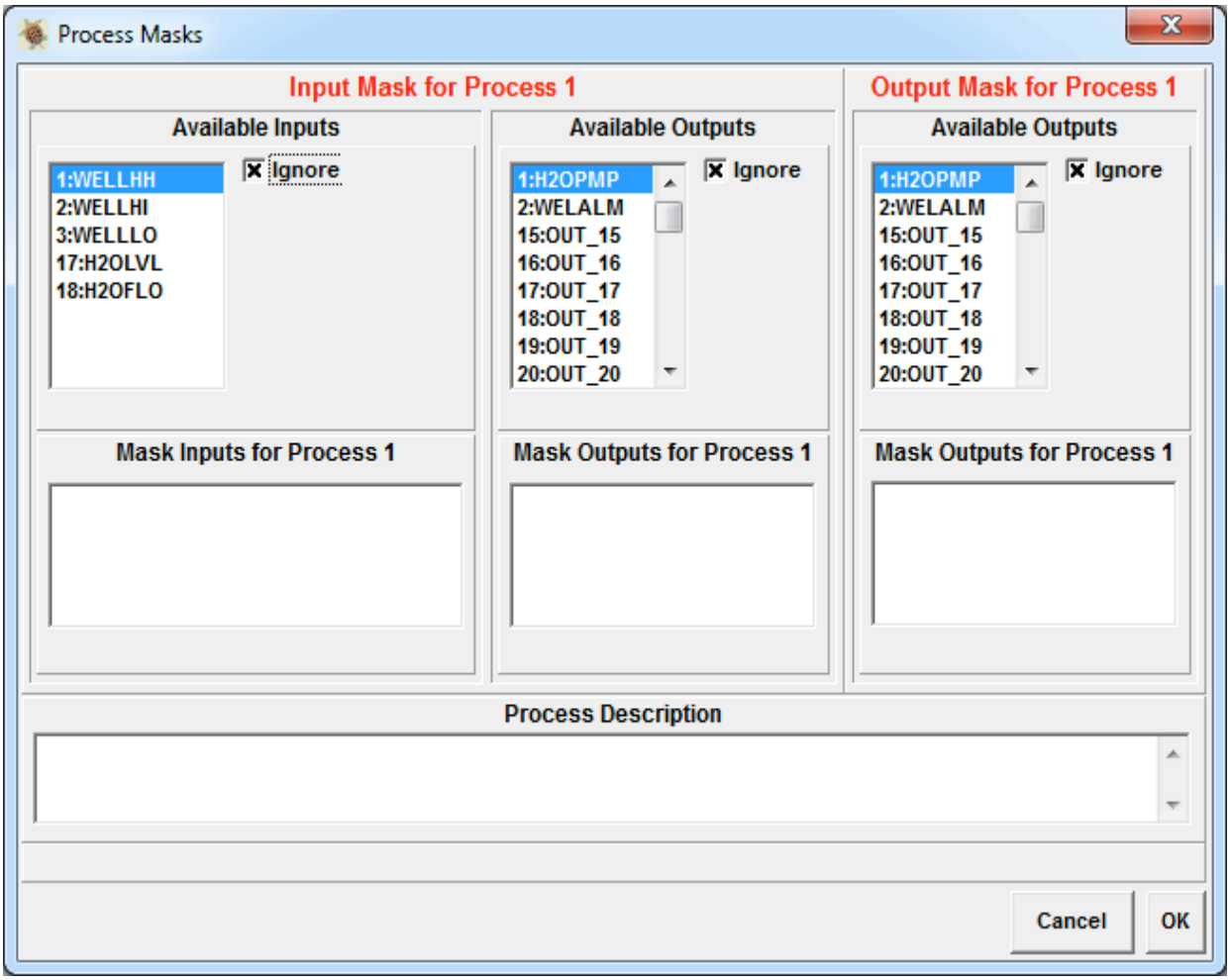

5. Select the combinations of Inputs and Outputs that need to be satisfied in the **Input Mask** by clicking the individual I/O points, unchecking the **Ignore** boxes, and selecting the appropriate states (i.e. ON/OFF or Active/Inactive). ProView will begin building the process task for you in the **Process Description** window.

6. Select the Outputs that should be switched (if any) if the input mask is true, by clicking the desired outputs, unchecking the **Ignore** boxes, and selecting **SW ON** or **SW OFF**.

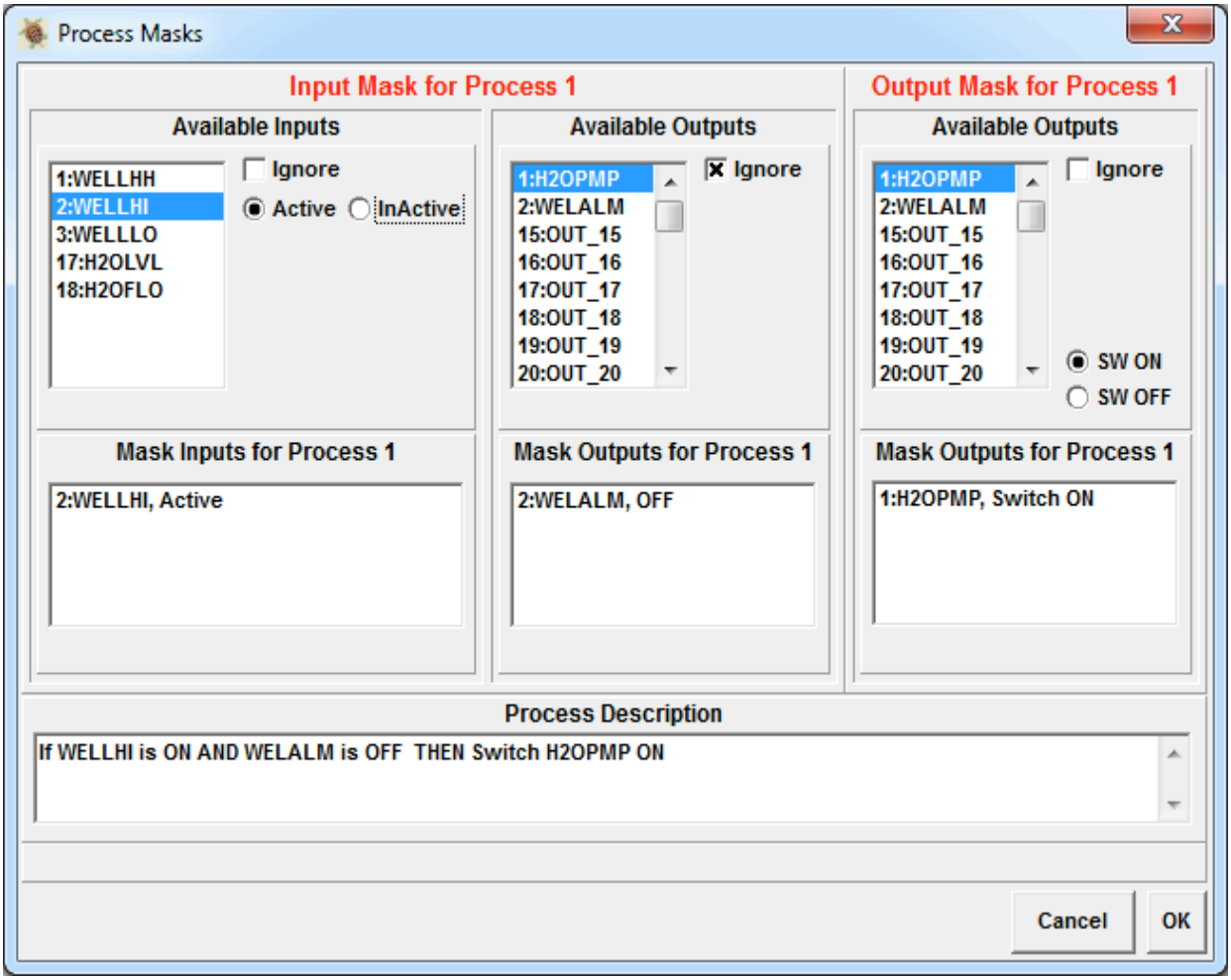

7. Click OK

8. Verify on the main Process Tasks screen that the description of the process is correct.

9. Add any additional parameters to the process, such as delays, reporting, or shutdown capability.

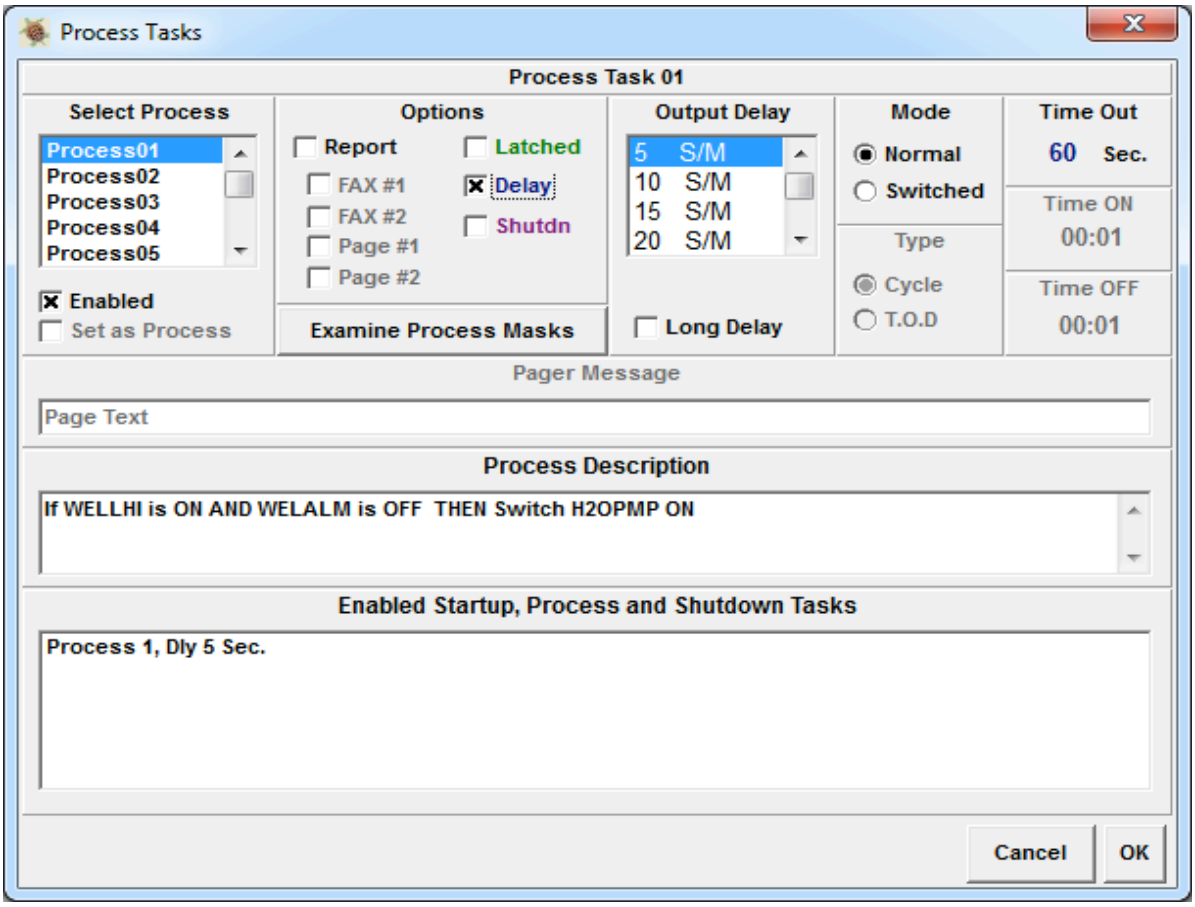

Processes Based on Analog Inputs

In order to initiate a process task using an analog input, the input must change state from ***inactive*** to ***active***, or vice-versa. In the usual case where the input has ***Endpoint*** active states selected (see Chapter 2), the input can become active as it rises above the ***high setpoint*** or lower than the ***low setpoint***. A process can also be based on surpassing the ***high-high setpoint*** or dropping below the ***low-low setpoint***, in systems that have been configured for four alarm levels (see Chapter 4). When initiating a process upon the analog input becoming ***inactive***, it is specified as being ***NOT high or low***, or ***NOT high-high or low-low*** (designated as **!(H/L)** and **!(HH/LL)**, respectively). In the following examples, two processes are created: one that uses a level transducer to turn off a well pump when the level has dropped below the low setpoint, and another that is used to issue a fax warning and turn on an alarm lamp if there is either a high OR low flow rate condition which persists for 30 seconds.

The process shown below will turn off the well pump when the level of water above a submersible level (pressure) transducer falls below the low setpoint.

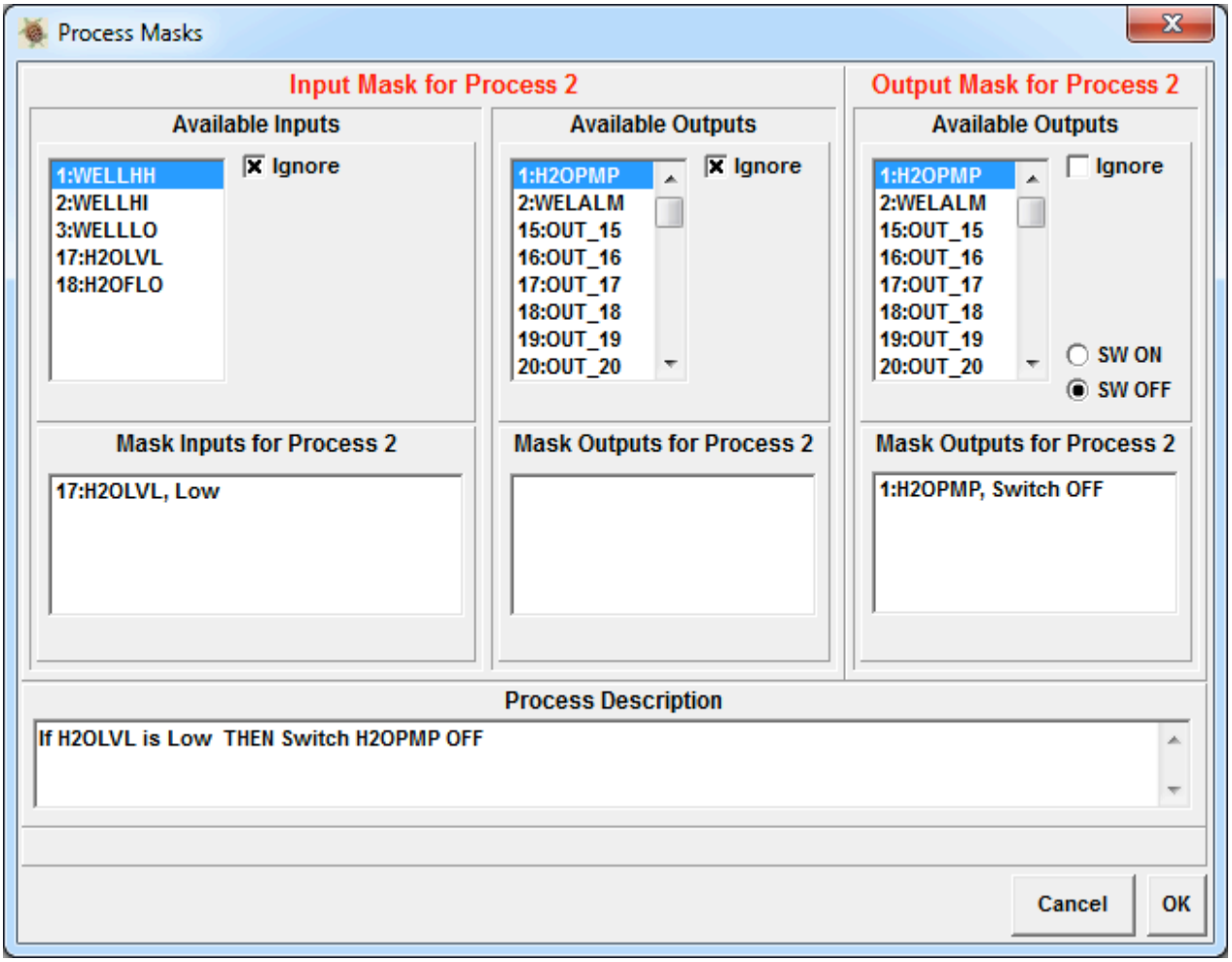

The process shown below will cause an alarm to be reported if the flow rate exceeds the high level setpoint or falls beneath the low level setpoint and remains there for 30 seconds.

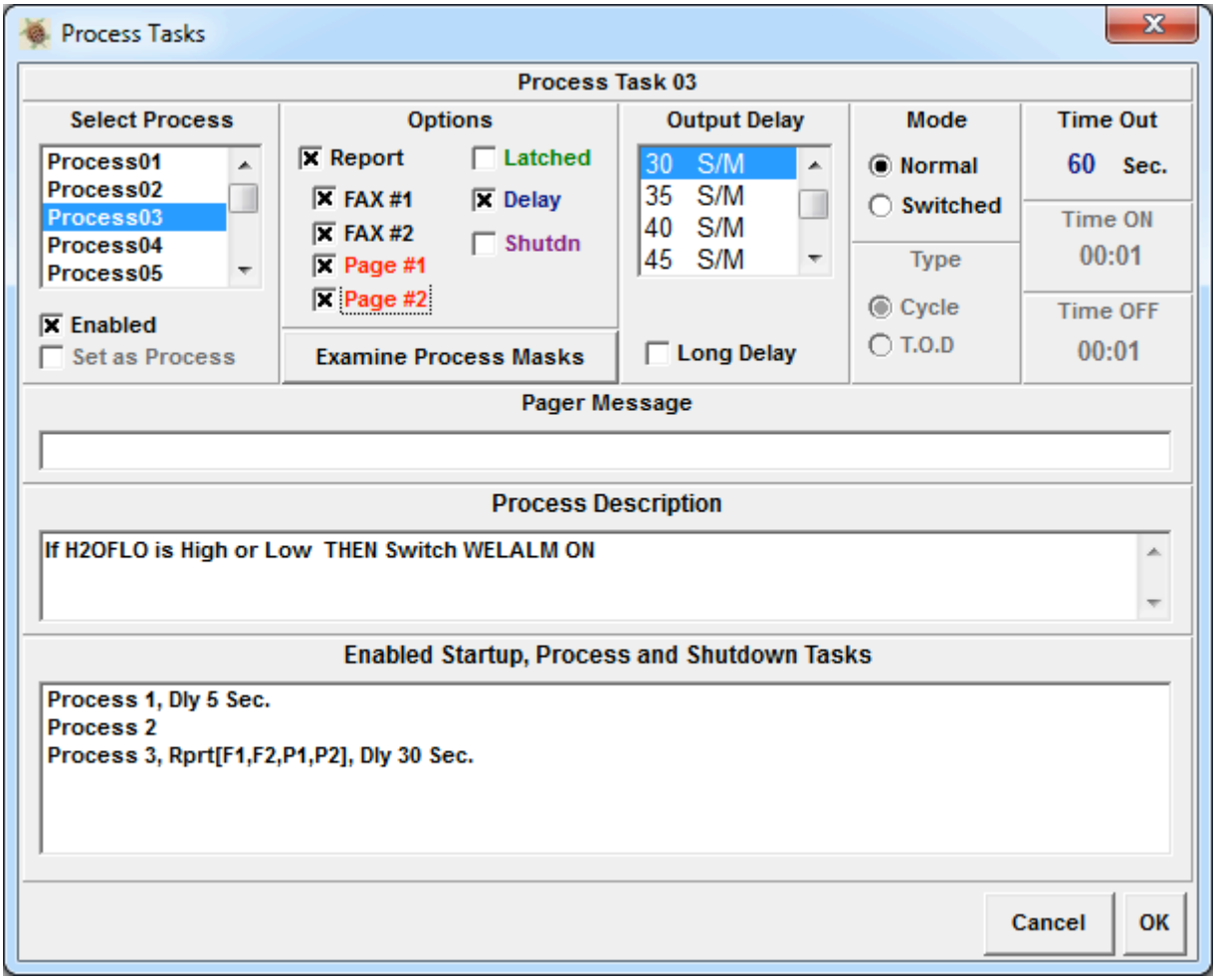

Creating a Cycled or Time of Day Process

A common application involves cycling a solenoid valve for several hours at a time. Consider a case involving a process to open a solenoid valve for 1 hour and close it for 6 hours:

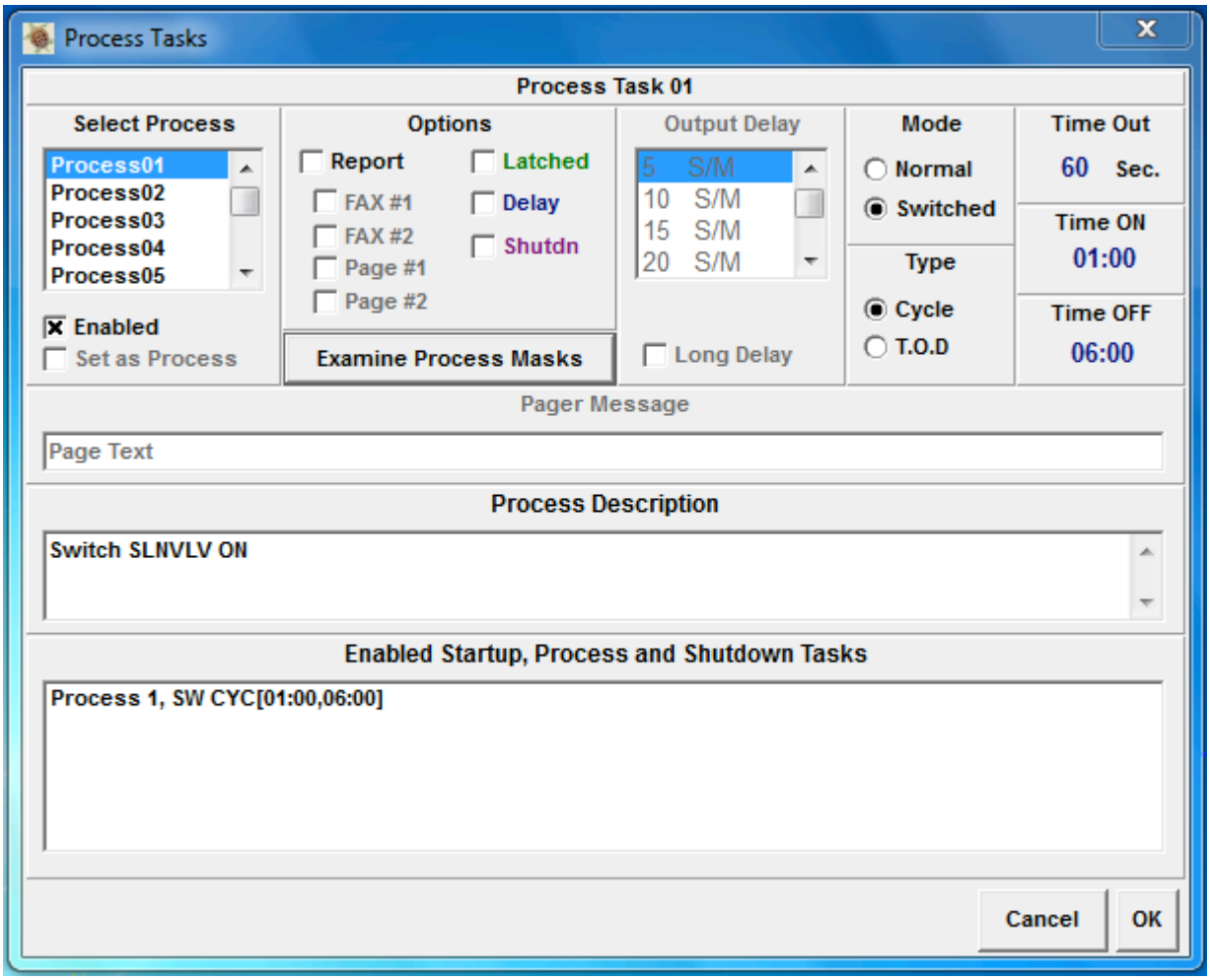

This process reads **Switch SLNVLV ON**, but because the process is cycled, it could just as well say **Switch SLNVLV OFF** and it would work exactly the same. This process will switch the solenoid valve output on for 1 hour and then switch it off for 6 hours. This process will continue to run as long as the ProControl remains in Auto mode. Note that an input mask is not necessary in such a situation, but could easily be added to, say, ensure that there is sufficient pressure in a compressor before cycling the valve.

A time of day cycle could be created in a similar fashion, except **T.O.D.** would be checked instead of **Cycle** in the **Type** panel.

Processes Involving Memory Variables

As mentioned at the beginning of this chapter, a memory variable is typically used as a flag or placeholder in developing process tasks. A common application for use of a memory variable is in alternating pumps. The ProControl can keep track of which pump ran last by using a memory variable, as shown below.

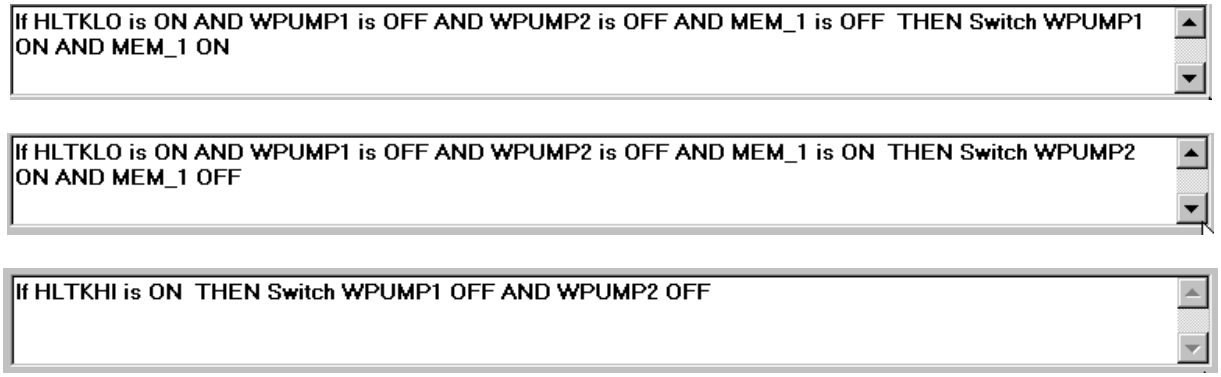

In these processes, **HLTKLO** is a low level switch for a tank, **HLTKHI** is a high level switch for the tank, and **WPUMP1** and **WPUMP2** represent the two pumps that feed the tank. After **WPUMP1** is switched on, the memory variable is toggled to ensure that **WPUMP2** comes on the next time **HTKLO** becomes active. Note that the last of the three process tasks shown shuts off both pumps, regardless of which one was running.

Checking Your Control Logic

ProView includes a useful utility that will help you "tie out" your control logic, and it is strongly recommended that you evaluate your process tasks this way prior to testing your complete system. Click on **Process Configuration** under the **File** menu, and the following screen will appear:

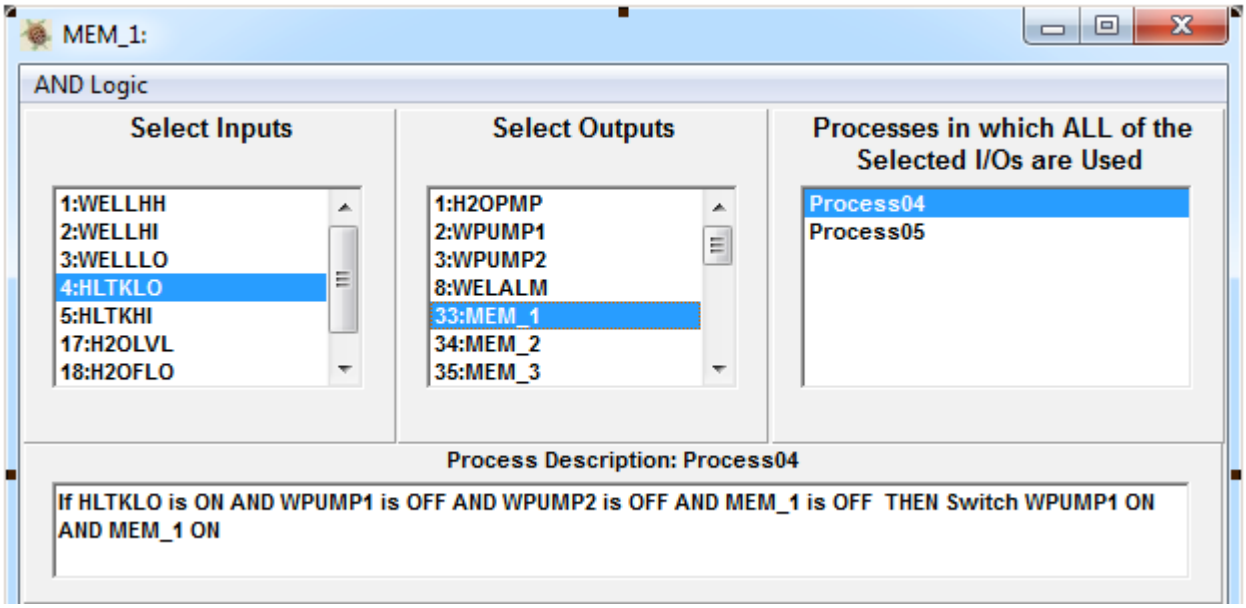

By selecting inputs and outputs from the left and center columns, respectively, you will see a listing of process tasks that include your selected I/O. This is particularly advantageous when you choose an individual output to ensure that there are no process conflicts (e.g., one process turns the output ON while another process that has an input mask that is also true turns the output OFF). To de-select an I/O point from the input or output list, **<Ctrl> - left click** on it.

CHAPTER 4: ADDITIONAL SETUP FEATURES

This chapter covers some of the additional features available during setup.

BOOTUP CONTROL

In some cases, you may wish to have the ProControl perform certain tasks immediately after powering up.

Select the **Unit Setup** menu as shown.

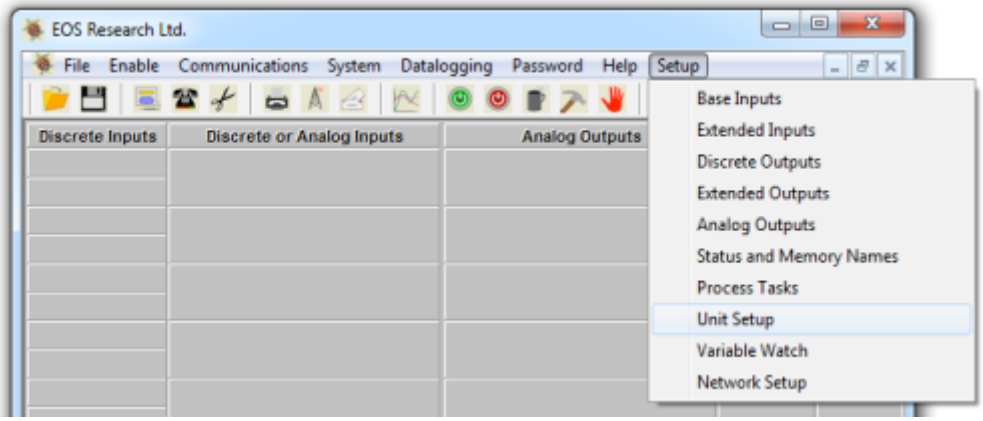

The Unit Setup window gives you access to several bootup control options.

Several of these options appear disabled and are for use only in factory configuration by EOS Research, such as the **Serial Number** of your unit, the **Option** purchased, the **ROM Version** (which you see when you connect to the unit), and the **Setup** version. Additional options, such as the **Modem Initialization String** and **500 Hz Counter**, should not be adjusted without contacting EOS Research technical support first.

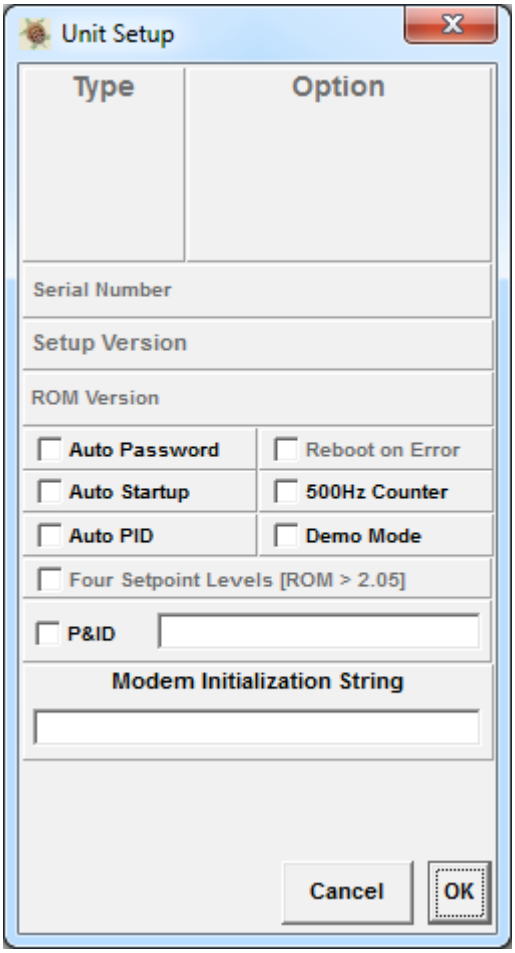

The options you have control over are:

Auto Password

Auto Password is used to bypass the opening logon screen on the display of the ProControl unit. By enabling this feature, you will not have to manually enter the 3-character password each time the power to your unit is cycled. However, Auto Password does not disable your ability to leave the unit at the password screen. If you should use the ProControl's "LOG OFF" option from the keypad of the unit, the password screen will remain on the display until either the power is cycled or the appropriate password is entered.

Auto Startup

Auto Startup is used to initiate the Startup sequence when the ProControl is powered up. After running the Startup sequence, the ProControl will be placed into Auto mode.

Auto PID

Auto PID is used to engage PID or proportional control of all algorithm-based analog outputs immediately upon power up. It is often coupled with Auto Startup, but is individually controllable. If this box is not checked, each algorithm-based analog output that you have configured must be manually set to PID or PRO mode after a power-up.

To enable any of these three bootup options, check the appropriate box(es).

FOUR SETPOINT LEVELS OPTION

To enable four activation levels for all analog inputs (rather than the standard two activation levels), check this box. This option is available only on ProControl systems that have a ROM version higher than 2.05.

P&ID OPTION

The **P&ID** option allows you to pull up an alternate "process and instrumentation diagram" representation of your system, which can be used to display operating data that is superimposed on a process diagram.

The P&ID option is designed to provide an alternate human-machine interface (HMI) for ProView with customizable graphics. Note that the P&ID screen is not interactive like the main ProView screen is; that is, data can be displayed on this screen, but commands cannot be issued from it.

If you wish to use this option, the name of the file that contains the process diagram must appear in the text box next to the word **P&ID**. The P&ID must be a bitmap format file (.bmp) that can be created with a drawing program or created as output from computer-aided drafting (CAD) programs. The bitmap image can be any size you choose, the file name's extension must be changed to **.pid**, and it must be placed in the same folder as your ProView site file (.pvs). Use of the P&ID option is outlined further in the ProView manual.

In ProView, when you open the P&ID screen, you will notice boxes on top of the bitmap background that contain some of the I/O values that have been configured for your system. Digital I/O are displayed as a tagname that changes color when the I/O point is activated. Analog I/O are displayed as numerical values, with analog outputs also containing the **%** symbol to distinguish them from analog inputs. You can move or remove these boxes as you choose. Remember to **Save** the site file before you exit ProView to store these changes.

To change the appearance of the P & ID:

1. To move a descriptive box containing either a tagname or value, hold the shift key and click the left mouse button when positioned on the appropriate box. This will enable you to drag and re-position the box wherever you choose.
2. To remove a descriptive box, double-click on the box. Once you have removed a box, it will no longer be available to you unless you restore all boxes.
3. To restore all descriptive boxes, position the mouse at the bottom of the P & ID window in the gray area. Then hold down the control and shift keys while simultaneously clicking the left mouse button.

STATUS AND MEMORY NAMES

The **Status and Memory Names** option in the **Setup** menu is used to change the tagnames for status inputs and memory variables. ***Status Inputs*** are the eight additional discrete inputs available on a ProControl Series 2^{plus} Type A2 system that can be used for status display, but not in process control. The names of memory variables can also be changed, if desired, to assist in describing the function of a memory variable. Simply click on the appropriate tagname and type in the name you want, remembering that there is a six-character limit to the tagnames.

VARIABLE WATCH

To access the **Variable Watch** dialog box, select the **Variable Watch** menu as shown below.

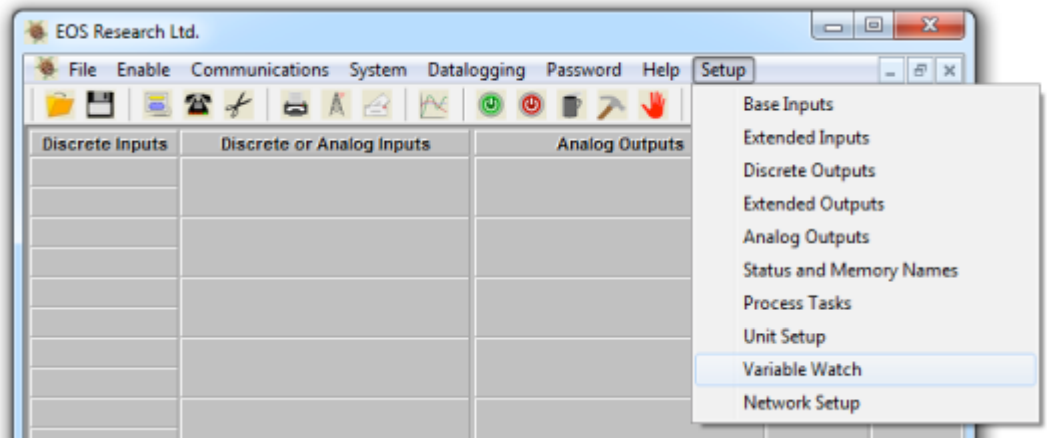

If your process control tasks make use of Memory Variables, you may wish to test or monitor these processes by changing or viewing the states of them. There are individual check boxes for each memory variable that will appear checked to represent an ON state and unchecked to represent an OFF state. You can click on these check boxes to toggle a memory variable ON and OFF for testing purposes. Please allow a few seconds for state changes of the memory variables to occur.

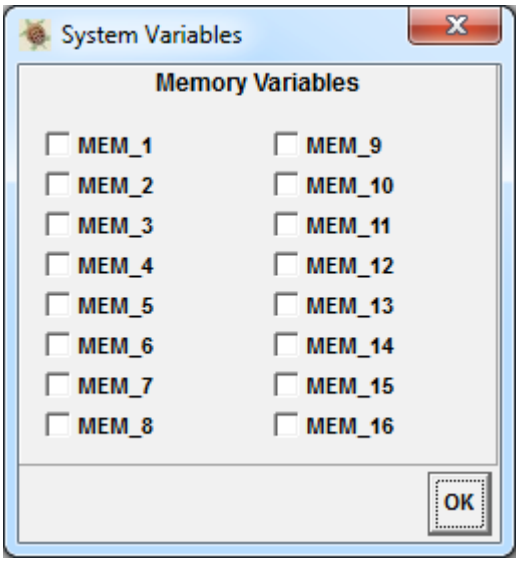

CHAPTER 5: CONFIGURING THE PROCONTROL

This chapter explains how to configure the ProControl and extract the current configuration from the from the ProControl.

CONFIGURING THE PROCONTROL

After you have set up all of your I/O points and programmed the process tasks, be sure to save your file. To configure the ProControl, you must connect to it either remotely or locally. Once the connection has been established, pull down the **System** menu and enter the **Configuration** sub-menu (you must be in **Setup** mode for this option to appear).

Select the option **Configure Remote Unit**. You will be asked to confirm your selection. Click **Yes** to continue.

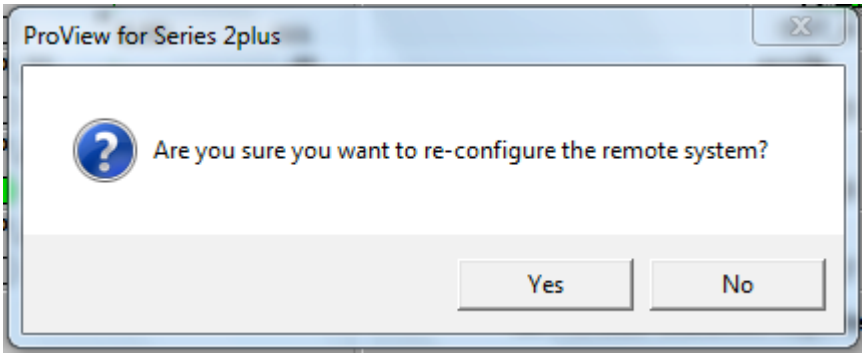

To ensure that the ProControl is in a stable state, ProView will issue an Emergency Shutdown and place the system in Manual mode. You can select **No** or **Cancel** to abort the configuration process, or **Yes** to proceed.

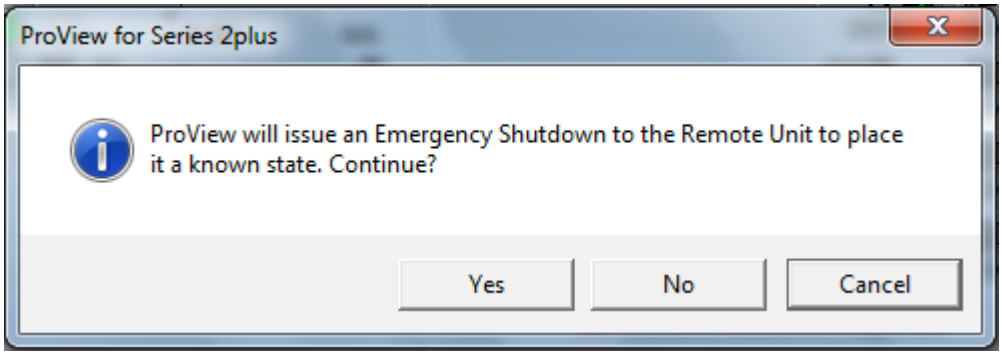

After you have instructed ProView to continue and configure the ProControl, you will notice that the cursor begins to spin, and panels in the bottom right of the screen will keep you informed of the progress of the configuration procedure.

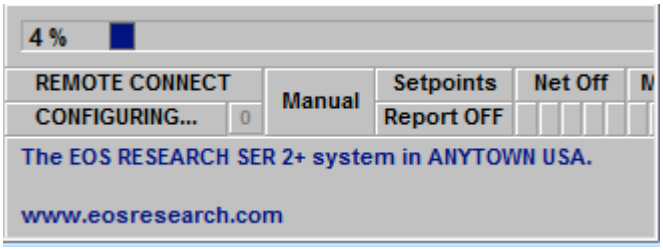

Do not be alarmed if the center panel says something other than **Manual**. The ProControl has been completely shut down and is in Manual mode. The ProView screen is not updated because the configuration process begins immediately after you instruct ProView to go ahead with the configuration.

GETTING THE REMOTE CONFIGURATION

In some cases, it may be necessary to extract the current configuration from the ProControl unit. If, for example, several people have worked on the configuration and you want to ensure that you have the latest changes, you might want to go through this procedure before continuing with further modifications. If you select the option **Get Configuration** from the **System**…**Configuration** submenu, ProView will begin extracting the setup information from the ProControl unit.

You will be asked to confirm your selection. Click **Yes** to continue.

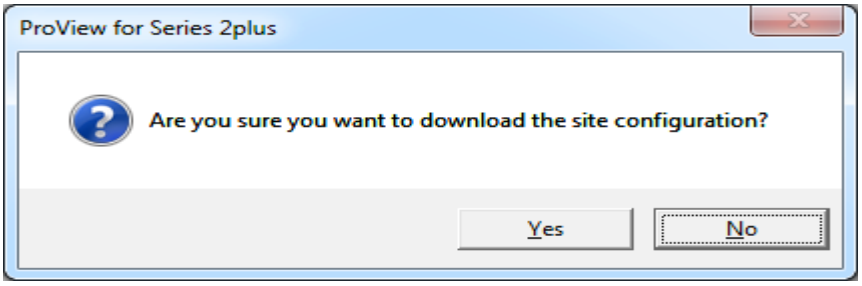

After you have instructed ProView extract the configuration from the ProControl, you will notice that the cursor begins to spin, and panels in the bottom right of the screen will keep you informed of the progress of the extraction process. Extracting the site configuration does not affect the normal process control of the ProControl unit, and therefore takes a bit longer than configuring a ProControl system. After the extraction is completed, you should immediately save the file to disk to ensure that you do not lose the current configuration.

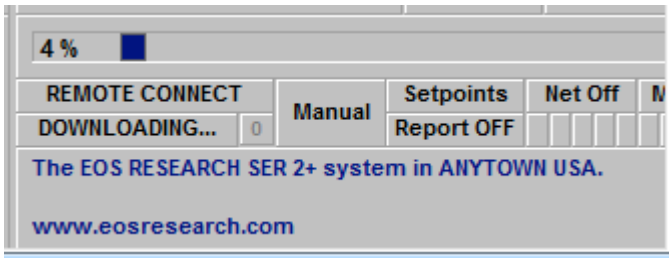

From 8/6/09 configuration file by Ilisa Tawney (new_EAI.cfg)

Abbreviations/Tagnames

Setup 1, Option S2P, Type 122, Serial No. 8253			
INPUTS			
Tagname	**Description**	**Setup**	**Range**
1 PSH201	???	D,NC,AL	
2 PSL201	???	D,NO,ST	
3 PSH301	???	D,NC,AL	
4 PSL301	???	D,NO,ST	
5 VSAUTO	Var speed transfer pump?	D,NO,ST	
6 VSHAND	Var speed transfer pump?	D,NO,ST	
7 EWAUTO	Is extr well switch @ panel on auto	D,NO,ST	
8 EWHAND	Is extr well switch @ panel on hand	D,NO,ST	
9 EW_RUN	Is extr well switch @ panel on run	D,NO,ST	
10 SBAUTO	Substrate?	D,NO,ST	
11 SBHAND	Substrate?	D,NO,ST	
12 RESET		D,NO,ST,SU	
13 TRAUTO		D,NO,ST	
14 TRHAND		D,NO,ST	
15 SSAUTO	Single speed transfer pump?	D,NO,ST	
16 SSHAND	Single speed transfer pump?	D,NO,ST	
18 PT101B	Pressure of extraction line in	A,EP,AL	0-50 PSI
19 FT_101	Flow in extraction line in	A,EP,AL	0-50 GPM
20 HL_4O2	High level EQ tank, float?	D,NO,ST	
21 LL_402	Low level EQ tank, float?	D,NO,ST	
22 FT_701	IW-8A flow	A,EP,AL	0-100 GPM
23 FT_702	IW-8B flow	A,EP,AL	0-100 GPM
24 LT_402	EQ tank level, ultrasonic	A,EP,AL	0-5000 GAL
25 PT101A	Water level in extr well, press tr	A,EP,ST	0-550 FT
27 PT_701	Pressure on transfer pump discharge	A,EP,AL	0-275 PSI
28 SS_RUN	Single speed transfer pump?	D,NO,ST	
29 VS_RUN	Var speed transfer pump?	D,NO,ST	
30 PRAUTO	Proc tank recirc valve?	D,NO,ST	
31 PRHAND	Proc tank recirc valve?	D,NO,ST	
Discrete Outputs			
Tagname	**Description**	**Setup**	
1 EW_PMP	Start/stop Extr well pump		
2 SB_PMP	Start/stop substrate (which one?)		
3 TR_PMP	Start/stop Transfer pump (which one?)		
4 SS_PMP	Single speed transfer pump?		
5 VS_PMP	Var speed transfer pump?		
6 RECIRC	Start/stop proc tank recirc vslve (valve no longer used)		
8 EW_ALM	Extr well alarm	AI	

9 BFHALM	Indication that high ball float alarm on	AI	
10 BFLALM	Indication that low ball float alarm on	AI	
11 CVHALM		AI	
12 CVLALM		AI	
13 SBLALM		AI	
14 PTHALM		AI	
17 EWPRUN	Indication of extr pump on/off	AI	
18 SSPRUN	Single speed transfer pump?	AI	
19 VSPRUN	Var speed transfer pump?	AI	
G1 – Group 1 – this output wil not respond to processes 17 -32			
G2 – Group 2 – this output will not respond to processes 01-16			
Lt – Lamp Test – This output has been declared as an alarm light			
AI – Alternate Image – This output is displayed as an icon other than the default switch.			
Analog Outputs			
Tagname	Description	Setup	
EW_SPD	Extraction well pump speed		
XFPSPD	Transfer pump speed		

gggg

Setup 1, Option S2P, Type 101, Serial No. 8254			
Tagname	Description	Setup	Range
INPUTS			
1 701AUT		D,NO,ST	
2 701HND		D,NO,ST	
3 702AUT		D,NO,ST	
4 702HND		D,NO,ST	
5 703AUT		D,NO,ST	
6 703HND		D,NO,ST	
7 704AUT		D,NO,ST	
8 704HND		D,NO,ST	
9 705AUT		D,NO,ST	
10 705HND		D,NO,ST	
11 706AUT		D,NO,ST	
12 706HND		D,NO,ST	

23 PSH402		D,NC,AL	
24 PSL402		D,NO,AL	
Discrete Outputs			
Tagname	Description	Setup	
1 V_701			
2 V_702			
3 V_703			
4 V_704			
5 V_705			
6 V_706			
8 IHPALM		AI	
9 ILPALM		AI	
Analog Outputs			
Tagname	Description	Setup	
None			

Setup 1, Option S2P, Type 122, Serial No. 8253		
Process	Conditions	Action
01	If EWAUTO is ON AND EW_ALM is OFF AND BFHALM is OFF AND BFLALM is OFF AND CVHALM is OFF AND CVLALM is OFF AND PTHALM is OFF	THEN Delay for 3 Seconds, Switch EW_PMP ON
02	If EWAUTO is ON AND PT101A is Low	THEN Delay for 3 Seconds, Send Report[FAX #1;FAX #2;Page #2],Switch EW_PMP OFF AND SB_PMP OFF AND TR_PMP OFF AND EW_ALM ON Page Message: ' '
03	If EW_PMP is ON	THEN Switch EWPRUN ON
04		
05		

Process 04: If EW_PMP is OFF
THEN Switch EWPRUN OFF

Process 05: If EWHAND is ON
THEN Switch EW_PMP ON

Process 06: If EWAUTO is OFF AND EWHAND is OFF
THEN Switch EW_PMP OFF

Process 08: If VSAUTO is ON AND SBAUTO is ON AND VS_PMP is OFF
THEN Delay for 3 Seconds, Switch SB_PMP OFF

Process 09: If SBHAND is ON
THEN Switch SB_PMP ON

Process 10: If SBAUTO is OFF AND SBHAND is OFF
THEN Switch SB_PMP OFF

Process 12: If EW_PMP is ON
THEN Delay for 3 Seconds, Switch EWPRUN ON

Process 13: If TRHAND is ON
THEN Delay for 3 Seconds, Switch TR_PMP ON

Process 14: If TRAUTO is OFF AND TRHAND is OFF
THEN Switch TR_PMP OFF

Process 15: If SSAUTO is ON AND HL_4O2 is ON AND INJPHI is OFF AND
INJPLO is OFF
THEN Delay for 3 Seconds, Switch SS_PMP ON

Process 16: If SSAUTO is ON

THEN Delay for 3 Seconds, Switch SS_PMP OFF

Process 17: If SSAUTO is ON AND INJPHI is ON
THEN Delay for 3 Seconds, Switch SS_PMP OFF

Process 18: If SSAUTO is ON AND INJPLO is ON
THEN Delay for 3 Seconds, Switch SS_PMP OFF

Process 19: If SS_RUN is ON
THEN Switch SSPRUN ON

Process 20: If SS_RUN is OFF
THEN Switch SSPRUN OFF

Process 21: If SSHAND is ON
THEN Switch SS_PMP ON

Process 22: If SSAUTO is OFF AND SSHAND is OFF
THEN Switch SS_PMP OFF

Process 23: If VSAUTO is ON AND HL_4O2 is ON AND INJPHI is OFF AND
INJPLO is OFF
THEN Delay for 3 Seconds, Switch VS_PMP ON

Process 24: If VSAUTO is ON AND LL_402 is OFF
THEN Delay for 3 Seconds, Switch VS_PMP OFF

Process 25: If VSAUTO is ON AND INJPHI is ON
THEN Delay for 3 Seconds, Switch VS_PMP OFF

Process 26: If VSAUTO is ON AND TRAUTO is ON AND VS_PMP is ON
THEN Delay for 3 Seconds, Switch TR_PMP ON

Process 27: If VS_PMP is ON
THEN Switch VSPRUN ON

Process 28: If VS_PMP is OFF
THEN Switch VSPRUN OFF

Process 29: If VSHAND is ON
THEN Switch VS_PMP ON

Process 30: If VSAUTO is OFF AND VSHAND is OFF
THEN Switch VS_PMP OFF

Process 31: If PT_701 is HiHi AND PRAUTO is ON AND INJPHI is OFF AND
INJPLO is OFF
THEN Delay for 3 Seconds, Switch RECIRC ON

Process 32: If PT_701 is NOT High or Low AND PRAUTO is ON
THEN Delay for 30 Seconds, Switch RECIRC OFF

Startup 01: Switch EW_ALM OFF AND BFHALM OFF AND BFLALM OFF AND CVHALM OFF AND CVLALM OFF AND SBLALM OFF AND PTHALM OFF AND RSTSLV ON

```
Process 36: If PRAUTO is ON AND INJPHI is ON
            THEN Delay for 3 Seconds, Switch RECIRC OFF

Process 37: If PRAUTO is ON AND INJPLO is ON
            THEN Delay for 3 Seconds, Switch RECIRC OFF

Process 38: If PRHAND is ON
            THEN Switch RECIRC ON

Process 39: If PRAUTO is OFF AND PRHAND is OFF
            THEN Switch RECIRC OFF

Process 40: If PT_701 is High
            THEN Delay for 3 Seconds, Switch IWV_OK ON

Process 41: If PT_701 is NOT High or Low
            THEN Delay for 30 Seconds, Switch IWV_OK OFF

Process 42: If PSH201 is ON AND EWAUTO is ON
            THEN Delay for 3 Seconds, Send Report[FAX #1;FAX #2],
            Switch EW_PMP OFF AND BFHALM ON

Process 43: If PSL201 is ON AND EWAUTO is ON
            THEN Delay for 3 Seconds, Send Report[FAX #1;FAX #2],
            Switch EW_PMP OFF AND BFLALM ON

Process 44: If PSH301 is ON AND EWAUTO is ON
            THEN Delay for 3 Seconds, Send Report[FAX #1;FAX #2],
            Switch EW_PMP OFF AND CVHALM ON

Process 45: If PSL301 is ON AND EWAUTO is ON
            THEN Delay for 3 Seconds, Send Report[FAX #1;FAX #2],
            Switch EW_PMP OFF AND CVLALM ON

Process 46: If EWAUTO is ON AND LT_402 is HiHi
            THEN Delay for 3 Seconds, Send Report[FAX #1;FAX #2],
            Switch EW_PMP OFF AND PTHALM ON

Process 47: If VSAUTO is ON AND SBAUTO is ON AND VS_PMP is ON AND
               MEM_1 is OFF
            THEN Switch SB_PMP ON AND MEM_1 ON

Process 48: If VSAUTO is ON AND SBAUTO is ON AND SB_PMP is ON
            THEN Delay for 10 Minutes, Switch SB_PMP OFF

Shutdown 01: Switch EW_PMP OFF AND SB_PMP OFF AND TR_PMP OFF AND SS_PMP
OFF AND VS_PMP OFF AND RECIRC OFF AND IWV_OK OFF

Process 50: Switch MEM_2 ON in TOD Mode [00:01,00:02]

Process 51: If MEM_2 is ON
            THEN Switch MEM_1 OFF
```

Process 52: If VSAUTO is ON AND SBAUTO is ON AND SB_PMP is ON AND
VS_PMP is OFF
THEN Delay for 3 Seconds, Switch SB_PMP OFF

Process 54: If VSAUTO is ON AND TRAUTO is ON AND VS_PMP is OFF
THEN Delay for 3 Seconds, Switch TR_PMP OFF

Process 55: If PSL201 is ON AND TRAUTO is ON
THEN Delay for 3 Seconds, Switch TR_PMP OFF AND BFLALM ON

Process 56: If PSH301 is ON AND TRAUTO is ON
THEN Delay for 3 Seconds, Switch TR_PMP OFF AND CVHALM ON

Process 57: If PSL301 is ON AND TRAUTO is ON
THEN Delay for 3 Seconds, Switch TR_PMP OFF AND CVLALM ON

3-SERIES & H-SERIES GEAR PUMPS

Liquiflo

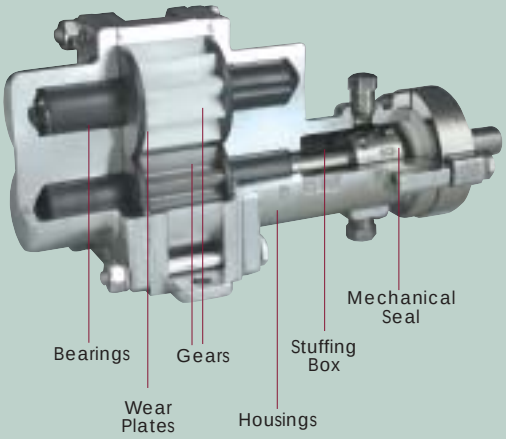

All pump components shown are available in a wide selection of materials to handle difficult chemical pumping applications.

Bearings	Optional Silicon Carbide Bearings and hardened Shafts provide extended service life.
Wear Plates	Allow pump to be rebuilt to like-new condition.
Gears	Material selection includes metal/non-metal self-lubricating combinations for thin fluids.
Housings	Available in several materials for a wide range of corrosion resistance.
Stuffing Box	**Universal Stuffing Box** will accept packing, single-mechanical seal, double-mechanical seal and external mechanical seal arrangements.
Mechanical Seal	Type 9 Seal: available in a wide selection of materials for pumping virtually any chemicals.

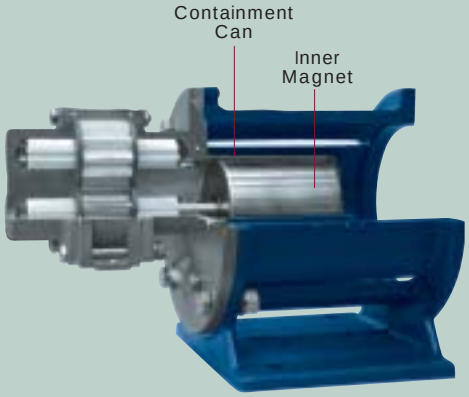

Containment Can	Available in 316 SS, Alloy-C or Tefzel-lined Alloy-C. Eliminates leakage associated with mechanical seals.
Inner Magnets	Liquiflo's standard Inner Magnets are made from Samarium Cobalt which can be used at elevated temperatures.

Liquiflo's Rotogear 3-series and H-series gear pumps handle flows from 0.1 to 58 GPM and up to 225 PSI* of pressure. They were specifically designed to meet the needs of the chemical processing industry and will handle a wide range of difficult pumping applications.

* For higher pressure applications, please contact factory.

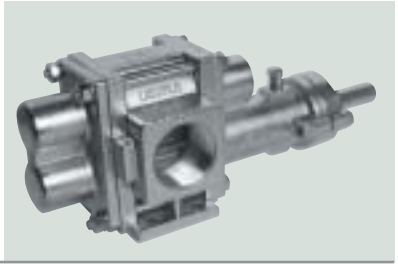

WHY USE GEAR PUMPS?

Gear Pumps are positive displacement pumps that are frequently used for metering and transferring viscous as well as thin fluids at higher differential pressures.

Gear pumps are an economical alternative to Diaphragm pumps for metering applications and do not pulse or require an air source to operate. They generally last longer in continuous duty applications than Diaphragm, Progressive Cavity or Peristaltic pumps that require frequent part replacements. However, the real value of a gear pump derives from the flexibility and availability of materials of construction and the sealing arrangements which facilitate optimizing the pump for the given service.

Liquiflo has extended the useful range of gear pumps into low-viscosity fluids by using a wide variety of non-metallic self-lubricating components.

Advantages and attributes over other types of pumps are:

- Low flow and high discharge pressure
- Virtually no pulsations
- Self-priming
- Lower NPSHR
- Fewer wearing parts
- Less auxiliary equipment required (pulsation dampeners, compressors, dryers, etc.)
- Flow accuracies as low as 0.5% are achievable
- Easy to repair

WHY USE MAG-DRIVE GEAR PUMPS?

Magnetically Coupled Pumps offer a simple and cost effective solution to sealing toxic, noxious, crystallizing or most other fluids that present problems for single seals and would therefore require use of a double mechanical seal. Magnetically-coupled pumps eliminate the need for cooling loops that are required by double mechanical seals. Two problems commonly associated with cooling loops are selecting a compatible barrier fluid and disposing of the barrier fluid in the event of an inboard seal failure.

Liquiflo has been producing magnetically coupled pumps for more than twenty years with tens of thousands of successful applications. Magnetically-coupled versions are available for all of Liquiflo's product lines including **2**, **3**, **4**, & **H-Series Gear Pumps**, and the **Centry® Series Centrifugal Pumps**.

Advantages of Mag-Drive Pumps:

- Less expensive than double-sealed arrangements
- Eliminates cooling loops required on double seal arrangements
- Eliminates the need to dispose of barrier fluids

MATERIALS AVAILABLE

Liquiflo's **Rotogear® 3-Series and H-Series Gear Pumps** come in a wide range of materials to meet all of your chemical processing applications.

HOUSINGS	GEARS	WEAR PLATES	BEARINGS	SHAFTS
316 SS	316 SS	Carbon	Carbon	316 SS
Alloy-C	Alloy-C	Ceramic	Teflon	Alloy-C
Titanium	Glass-filled PTFE	Teflon	Ryton	Titanium
	Delrin	Ryton	Silicon Carbide	Ceramic Coated
	Ryton	PEEK	PEEK	Tungsten Carbide Coated
	Carbon			

Liquiflo Gear Pumps handle a wide range of applications including the pumping of low-viscosity and high-viscosity fluids, as well as complex metering applications.

High-Viscosity Fluids

Water treatment polymers and food materials up to 80,000 cps are typical of the high-viscosity service of the Rotogear® Series of gear pumps. On high-viscosity applications, it is preferable and more efficient to use larger pumps running at slower speeds.

Low-Viscosity Fluids

Frequently, gear pumps are the preferred solution in low-viscosity pumping applications because of their hydraulics (low flow, high pressure and pulseless flow), compactness, efficiency and low cost. Liquiflo's wide selection of materials allow for pump customization to reduce premature shaft, gear, and bearing wear on low-viscosity fluids. Liquiflo has successfully pumped liquids with viscosities as low as 0.3 CPS.

Metering

Liquiflo gear pumps are used in variable flow systems where the motor RPM is controlled to regulate pump output. Flow rate, pH levels or RPM can trigger the control of feedback signals. (Refer to the Engineering section for more details on gear pumps in metering applications). The Rotogear® Series is available in a wide variety of flow ranges (11 sizes offered), simplifying selection for metering applications.

REPAIR KITS

Repair Kits simplify inventory and speed repair. All parts can also be purchased separately.

Repair kits contain all components to completely rebuild your Liquiflo Gear Pump to like-new condition (all items except the housings are included).

Repair Kits Include:

- **Gears**
- **Shafts**
- **Keys**
- **Bearings**
- **Wear Plates**
- **Pins**
- **O-Rings**
- **Retaining Rings**
- **Seals (if applicable)**

RELIEF VALVES

Positive displacement pumps should be installed with a relief valve in the discharge line. This will protect the pump and piping against any type of line blockage including the inadvertent closing of an isolation valve. Liquiflo manufactures two sizes of relief valves in both 316 SS and Alloy-C.

CARTRIDGE

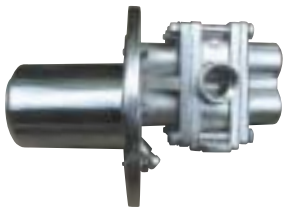

A cartridge is a complete mag-drive pump less the outer magnet and pedestal. A cartridge replacement is a convenient way to quickly replace a pump that requires maintenance.

OPTIONS

Liquiflo has several options available for its complete line of Positive Displacement Gear Pumps, as well as offering a complete line of standard pumps. Liquiflo will custom engineer its pumps and options to fit your specific requirements.

SANITARY FITTINGS

Sanitary Fittings are available for food & drug applications

RAISED-FACE FLANGES

ANSI, DIN, JIS Flanges are available

CLAMP-ON TEMPERATURE CONTROL JACKET

Temperature Control Jackets can maintain the pump at either elevated or reduced temperatures. Commonly used when pumping liquids that solidify or become difficult to pump when the temperature decreases.

S-ADAPTER

The S-Adapter is available for long-coupling mag-drive pumps; it isolates the pump from the motor.

TYPICAL MOUNTING CONFIGURATIONS

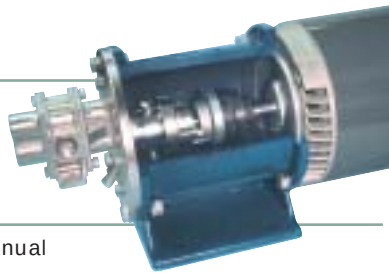

Close-Coupled Option eliminates manual alignment of pump and motor.

Features of Close-Coupled Design:

- Eliminates difficulties and inconvenience of manually aligning pump and motor
- Cast-iron bracket that rigidly supports pump & motor
- Dimensionally interchangeable with our Mag-Drive pumps
- Available for 56C, 143/145TC, IEC 71, 80, 90 frame motors
- Excellent for OEM applications
- Quickly and easily installed

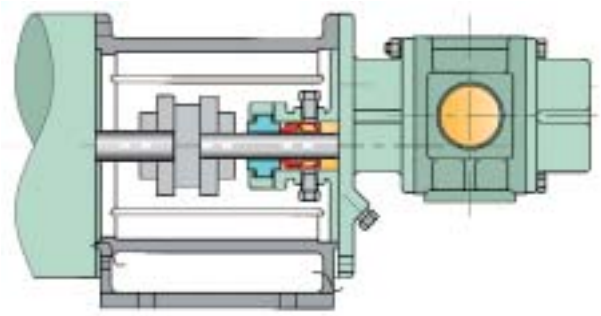

CLOSE-COUPLED SEALED

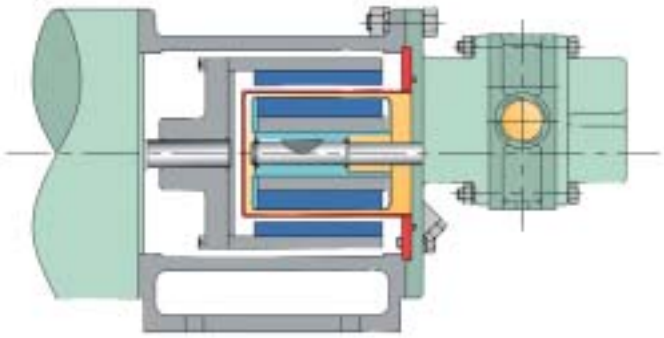

CLOSE-COUPLED MAG-DRIVE

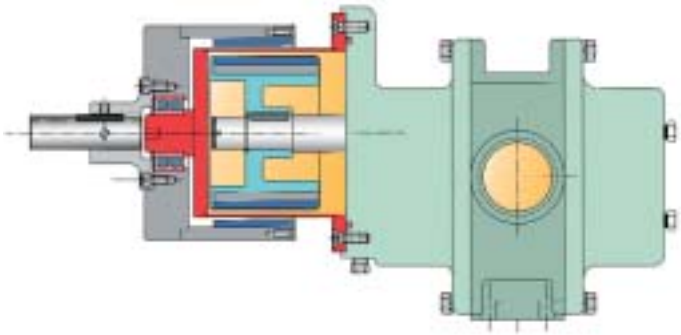

LONG-COUPLED MAG-DRIVE (312, 314 & H12 only)

SEAL CONFIGURATIONS

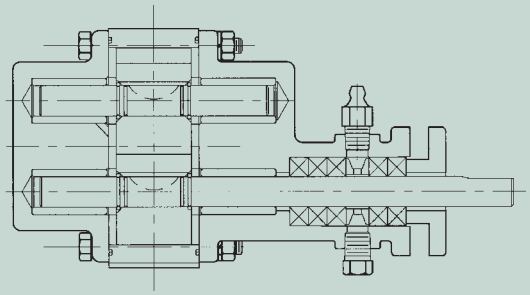

FIG.1 LANTERN RING/PACKING SEAL

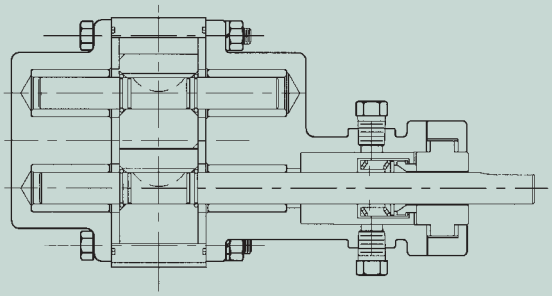

FIG.2 SINGLE MECHANICAL SEAL

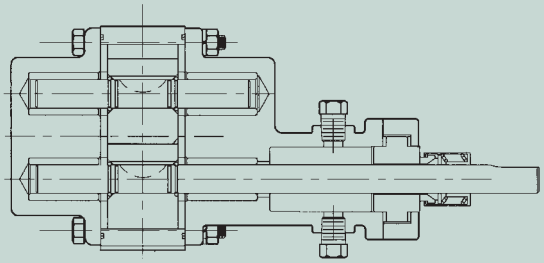

FIG.3 EXTERNAL MECHANICAL SEAL

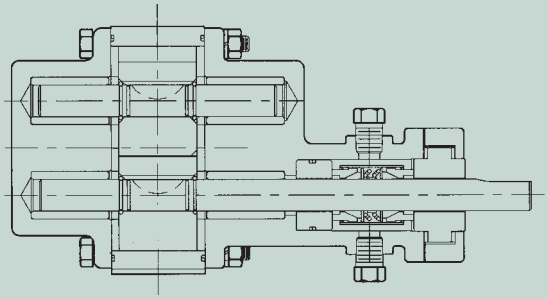

FIG.4 DOUBLE MECHANICAL SEAL

RANGE OF SEALS AVAILABLE

Liquiflo's Universal Front Housings will accommodate packing, as well as single and double mechanical seal configurations.

Fig. 1 **Packing** is suitable and the most economical for safe, non-hazardous liquids.

Fig. 2 **Single Mechanical Seals** are used when leakage needs to be minimized. Single seals have a viscosity limit of 5,000 cps and a temperature limit of 500˚F.

Fig. 3 **External Mechanical Seals** are used to isolate the seal body from the liquid being pumped or when pumping liquid under vacuum conditions.

Fig. 4 **Double Mechanical Seals** require a flushing system and are typically used when pumping liquids that are abrasive, crystallize on contact with air, or are very dangerous.

SEAL MATERIALS AVAILABLE

PACKING	SEAL WEDGES	SEAL FACES	SEAL SEATS
Braided Teflon Grafoil	Teflon Grafoil	Carbon Teflon Silicon Carbide	Ceramic Silicon Carbide Tungsten Carbide

FIG.5 EXPLODED VIEW OF SINGLE INTERNAL MECHANICAL SEAL

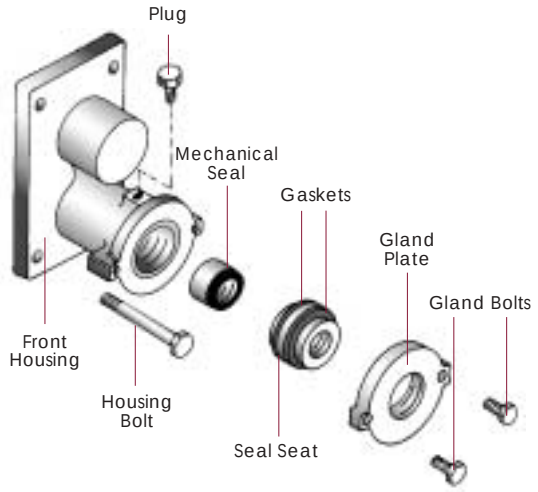

H-SERIES

ROTOGEAR® EXTERNAL GEAR PUMPS

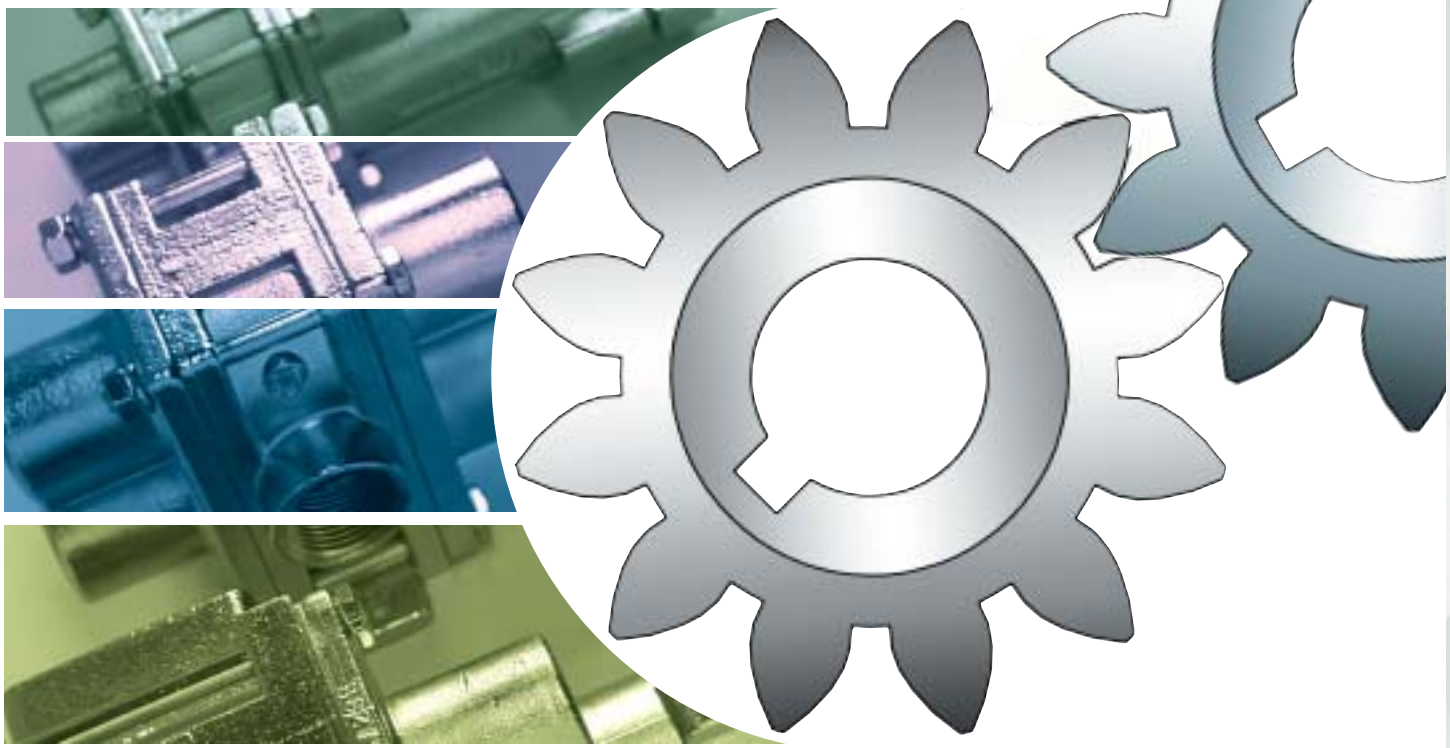

H-SERIES
ROTOGEAR® EXTERNAL GEAR PUMPS

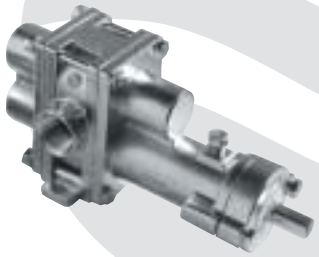

H-Series

Up to 225 PSI differential pressure

Liquiflo's **H-Series high-pressure** gear pumps are available in Sealed and Mag-Drive versions with flows up to approximately **30 GPM** and differential pressures up to **225 PSI***. With similar outside dimensions to the 3-Series, the H-Series has larger shafts, bearings and seals for extended service life. These features allow it to handle higher pressures and operate longer.

* 300 PSI possible on some models. Contact factory.

H-Series Specification Chart

SEALED	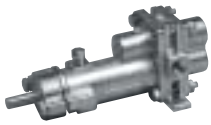					
MAG-DRIVE Close-Coupled						
SEALED MAG-DRIVE	**H3F H3F-MC**	**H5R H5R-MC**	**H5F H5F-MC**	**H7N H7N-MC**	**H7R H7R-MC**	**H7F H7F-MC**
Max Flow	**1.4** GPM (**5.3** LPM)	**2.4** GPM (**9.1** LPM)	**3.4** GPM (**13** LPM)	**5.4** GPM (**20.4** LPM)	**8.6** GPM (**32.5** LPM)	**10.7** GPM (**40.5** LPM)
Max Diff. Press.	225 PSI (15.5 BAR)	225 PSI (15.5 BAR)	225 PSI (15.5 BAR)	225 PSI (15.5 BAR)	225 PSI (15.5 BAR)	225 PSI (15.5 BAR)
Max Discharge	300 PSI (20.7 BAR)	300 PSI (20.7 BAR)	300 PSI (20.7 BAR)	225 PSI (15.5 BAR)	225 PSI (15.5 BAR)	225 PSI (15.5 BAR)
Max Temp.	500˚F (260˚C)	500˚F (260˚C)	500˚F (260˚C)	500˚F (260˚C)	500˚F (260˚C)	500˚F (260˚C)
Max Viscosity	100,000* CPS	100,000* CPS	100,000* CPS	100,000* CPS	100,000* CPS	100,000* CPS
Max Speed	1750 RPM	1750 RPM	1750 RPM	1750 RPM	1750 RPM	1750 RPM
NPSHR @ Max Speed	2 FT (0.6M)	2 FT (0.6M)	2 FT (0.6M)	5.2 FT (1.6M)	5.2 FT (1.6M)	5.2 FT (1.6M)
Weight (LBS) Sealed Mag-Drive	2.5 LBS (1.1 KGS) 31 LBS (14 KGS)	3.5 LBS (1.6 KGS) 32 LBS (15 KGS)	3.5 LBS (1.6 KGS) 32 LBS (15 KGS)	6.5 LBS (2.9 KGS) 36 LBS (16 KGS)	6.5 LBS (2.9 KGS) 36 LBS (16 KGS)	6.5 LBS (2.9 KGS) 36 LBS (16 KGS)

* Higher viscosities possible. Contact factory.

Liquiflo™

COMPOSITE GEAR PUMP PERFORMANCE CURVES

TEST FLUID: OIL (100 CPS)

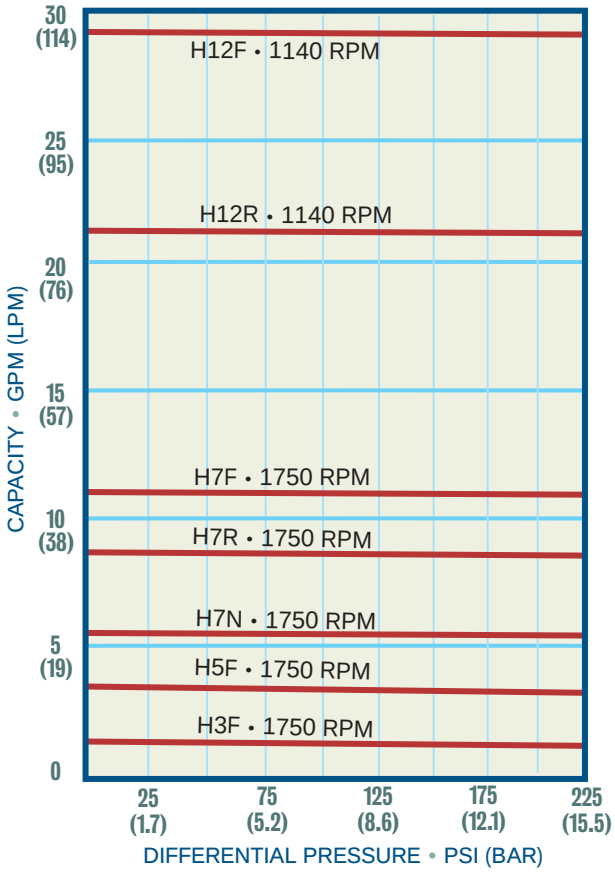

LONG-COUPLED ONLY

H12R H12R-MC	H12F H12F-MC
22 GPM (**83** LPM)	**29** GPM (**110** LPM)
225 PSI (15.5 BAR)	225 PSI (15.5 BAR)
270 PSI (18.6 BAR)	270 PSI (18.6 BAR)
500˚F (260˚C)	500˚F (260˚C)
100,000* CPS	100,000* CPS
1150 RPM	1150 RPM
5 FT (1.5M)	5 FT (1.5M)
52 LBS (23.6 KGS) 70 LBS (32 KGS)	52 LBS (23.6 KGS) 70 LBS (32 KGS)

PUMP MODEL CODING

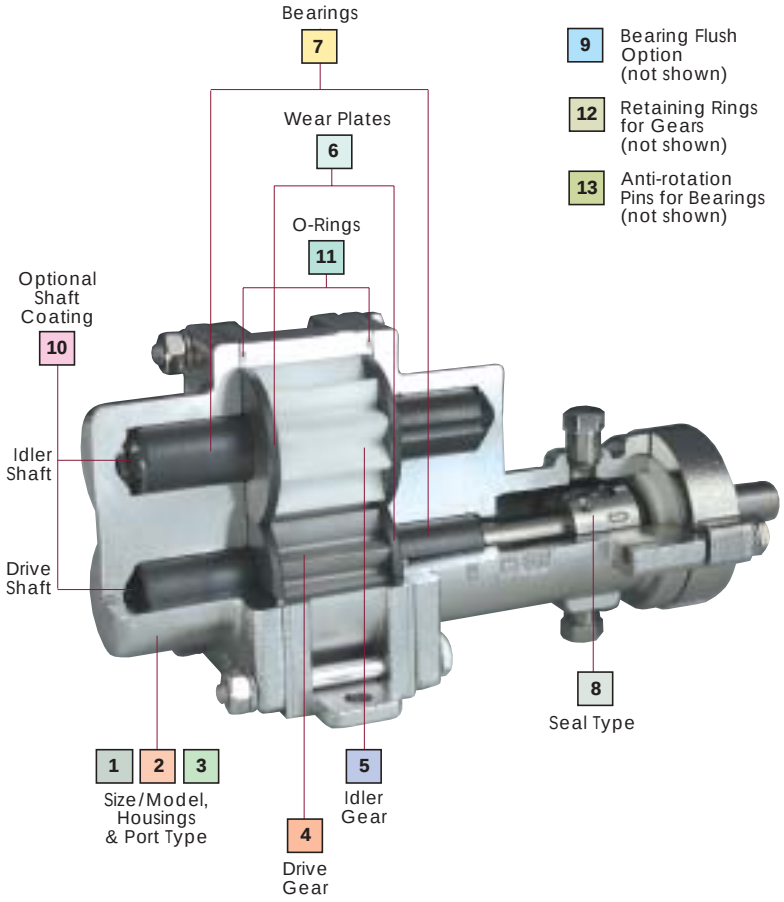

Sealed Pump

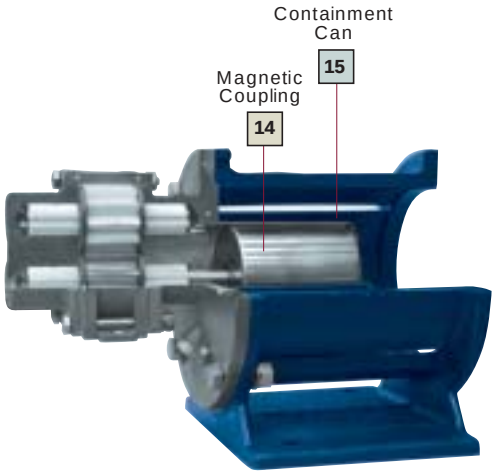

Mag-Drive Pump

tel. 908.518.0777 fax. 908.518.1847 www.liquiflo.com

PUMP MODEL CODING

EXAMPLE:

H5FS6PEEU00000, designates a Model H5F Pump with Single Mechanical Seal.

H5F	S	6	P	E	E	U	0	0	0	0	0	_	_
1&2	3	4	5	6	7	8	9	10	11	12	13	14	15

Pos.	Description	Selection	
1 & 2	Pump Model	H5F	**H5F Pump**
3	Housing Mat'l	S	**316 SS NPT**
4	Drive Gear Mat'l	6	**316 SS**
5	Idler Gear Mat'l	P	**PEEK**
6	Wear Plate Mat'l	E	**Carbon 60**
7	Bearing Mat'l	E	**Carbon 60**
8	Seal Type	U	**Single, Carbon-Ceramic**
9	Bearing Flush	0	**None**
10	Shaft Coating	0	**None**
11	O-Rings	0	**Teflon**
12	Retaining Ring	0	**Same mat'l as housings**
13	Bearing Pins	0	**Teflon**
14	Mag Coupling		**N/A**
15	Options		**N/A**

Liquiflo's Model Code describes both the pump's size and material selected. This model code is required for the future identification of your pump when reordering either a pump or replacement parts. Model code is permanently stamped into pump housing.

■ **Available**

❍ **No longer available in new pumps. Parts available only for repair and replacement.**

⊗ **Not Available**

Flanges available:

ANSI, DIN, JIS

Or slip joint flanges conforming to the dimensions of the standard.

	H3	H5	H7	H12
NPT/BSPT	1/4	1/2	3/4	1 1/4
ANSI 150# RF FLG	1/2	1/2	3/4	1 1/2
DIN PN16	10	15	20	40
JIS 10K	10	15	20	40

Liquiflo H-Series Gear Pumps
Selection & Availability

Sample Model No.	H5	F	S	6	P	E	E	U	0	0	0	0	0		
Position No.	1	2	3	4	5	6	7	8	9	10	11	12	13	14	15

Position			H3	H5	H7	H7N	H12
1 Model	**Pump Model**						
2 Model	F = Full Capacity		■	■	■	⊗	■
	R = Reduced Capacity		⊗	■	■	⊗	■
3 Basic Material & Port Type	S = 316 SS NPT		■	■	■	■	■
	H = Alloy-C NPT		■	■	■	■	■
	L = 316 SS Flanged		■	■	■	■	■
	C = Alloy-C Flanged		■	■	■	■	■
	X = 316 SS BSPT		■	■	■	■	■
	Y = Alloy-C BSPT		■	■	■	■	■
4 Drive Gear	1 = Alloy-C		■	■	■	■	■
	6 = 316 SS		■	■	■	■	■
	P = PEEK		■	■	■	■	■
5 Idler Gear	1 = Alloy-C		■	■	■	■	■
	6 = 316 SS		■	■	■	■	■
	8 = Ryton		■	■	■	■	■
	P = PEEK		■	■	■	■	■
6 Wear Plates	E = Carbon 60		■	■	■	■	■
	3 = Teflon		■	■	■	■	■
	4 = Ceramic		■	■	■	■	■
	P = PEEK		■	■	■	■	■
7 Bearings	E = Carbon 60		■	■	■	■	■
	B = Silicon Carbide		■	■	■	■	■
	P = PEEK		■	■	■	■	■
8 Outer Magnet Bore (Mag Drive ONLY)	0 = 0.625"	(56C)	■	■	■	■	⊗
	1 = 0.875"	(143/145TC)	■	■	■	■	■
	2 = 14 mm	(IEC 71 - B5)	■	■	■	■	⊗
	3 = 19 mm	(IEC 80 - B5)	■	■	■	■	⊗
	4 = 24 mm	(IEC 90 - B5)	⊗	■	■	■	⊗
	5 = 1.125"	(182/184TC)	⊗	⊗	■	■	⊗
8 Seal Types (Sealed pumps ONLY)	U = Single-Int	Carbon - Ceramic	■	■	■	■	■
	L = Packing	Teflon	■	■	■	■	■
	R = Packing	Grafoil	■	■	■	■	■
9 Bearing Flush	0 = Standard Housings		■	■	■	■	⊗
	1 = Ext. Brg Flush		■	■	■	■	■
	2 = Int. Brg Flush		■	■	■	■	■
10 Shaft Coating	0 = Material same as housing (uncoated)		■	■	■	■	■
	1 = Ceramic		■	■	■	■	■
	2 = Tungsten Carbide		■	■	■	■	■
11 O-Rings	0 = Teflon		■	■	■	■	■
	6 = 316 SS / PFA encap.		■	■	■	■	■
	B = Buna-N		■	■	■	■	■
	E = EPDM		■	■	■	■	■
	V = Viton		■	■	■	■	■
	K = Kalrez		■	■	■	■	■
12 Retaining Rings	0 = Material same as housing		■	■	■	■	■
13 Bearing Pins	0 = Teflon		■	■	■	■	⊗
	1 = Alloy-C		■	■	■	■	■
	6 = 316 SS		■	■	■	■	■
14 Magnetic Coupling (Mag Drive)	S = 33 in-lbs		■	⊗	⊗	⊗	⊗
	B = 120 in-lbs		■	■	■	■	⊗
	C = 240 in-lbs		⊗	■	■	■	⊗
	K = 250 in-lbs		⊗	⊗	⊗	⊗	■
	J = 500 in-lbs		⊗	⊗	⊗	⊗	■
15 (Options)	8 = Temperature Trim		■	■	■	■	■
	9 = Viscosity Trim		■	■	■	■	■
	S = Single Wall Can		■	■	■	■	■
	D = Dual-Kan		■	■	■	■	■

H3F SEALED
H3F-MC MAG-DRIVE

Liquiflo™
H-SERIES
ROTOGEAR®
GEAR PUMP

Sealed

Close Coupled:
Sealed or Mag-Drive

PORT SIZE	1/4" NPT/BSPT or 1/2" FLG
MAX FLOW	1.4 GPM; 5.3 LPM
MAX DIFFERENTIAL PRESSURE	225 PSI; 15.5 BAR
MAX DISCHARGE PRESSURE	300 PSI; 20.7 BAR
MAX TEMPERATURE	500˚F; 260˚C
MIN TEMPERATURE	-40˚F; -40˚C
MAX VISCOSITY	100,000* CPS
NPSHR @ 1750 RPM	2 FT; 0.6 M
LIFT (DRY)	1.5 FT; 0.45 M
WEIGHT (without motor)	
SEALED	2.5 LBS; 1.1 KGS
MAG-DRIVE	31 LBS; 14 KGS

* Higher viscosities possible. Contact factory.

PERFORMANCE CURVES

1 CPS Fluid (Water)

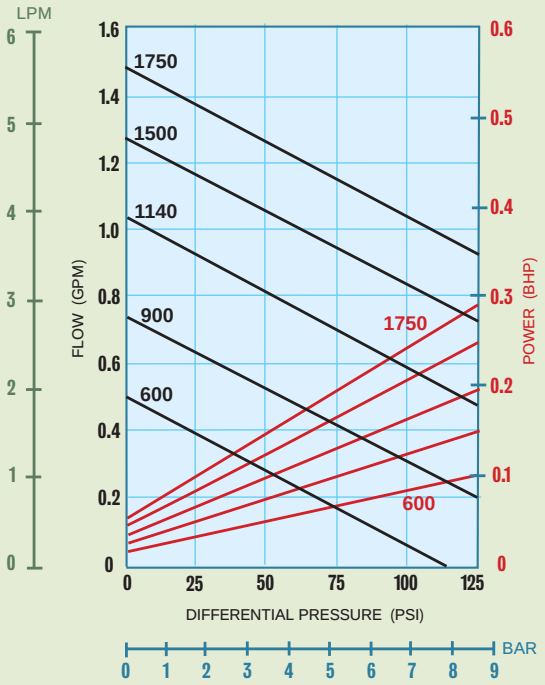

100 CPS Fluid (Oil)

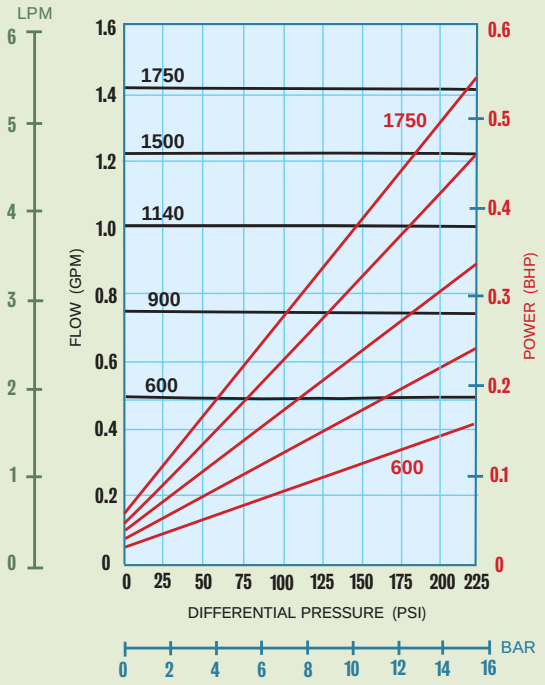

Dimensional Data (inches)

Long-Coupled: H3F Sealed

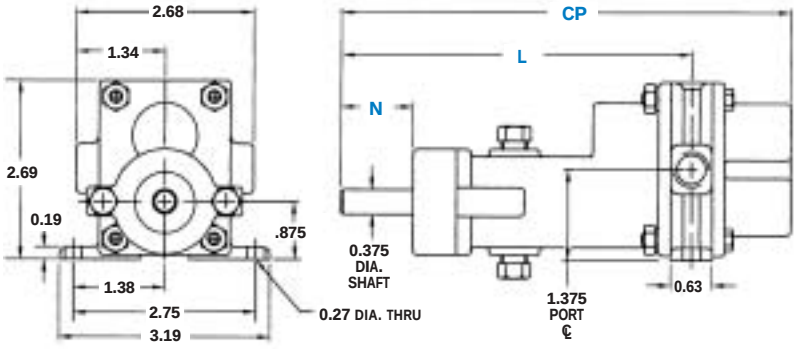

DIMENSION	SEAL CONFIGURATIONS PACKING SINGLE MECHANICAL SEAL DOUBLE MECHANICAL SEAL
CP(1)	6.94
N	0.81 (2)
L	5.44

NOTES: (1) Add .312 inches for Bearing Flush Plug.
(2) Minimum dimension.

Dimensional Data (inches)

Close-Coupled: H3F-MC & H3F Sealed

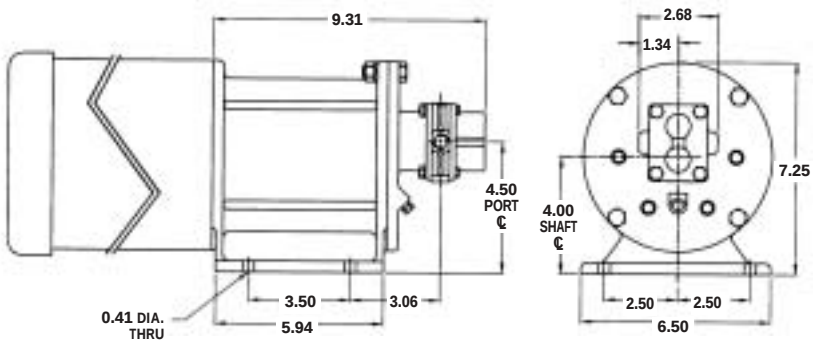

tel. 908.518.0777 fax. 908.518.1847

INSTALLATION, OPERATION & MAINTENANCE MANUAL

H-SERIES & 3-SERIES SEALED GEAR PUMPS

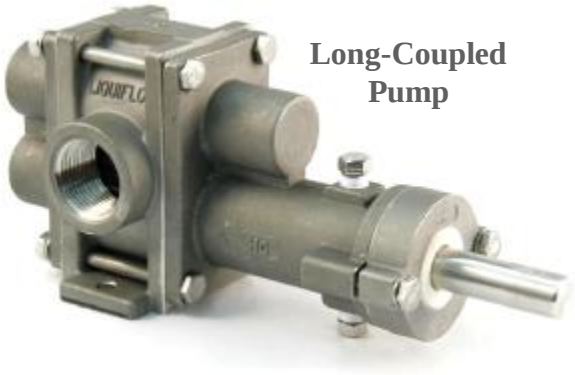

Long-Coupled Pump

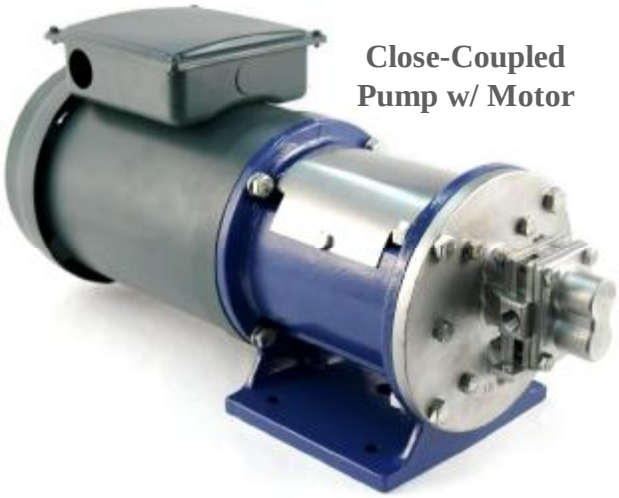

Close-Coupled Pump w/ Motor

H-SERIES: Models H1F, H3F, H5R, H5F, H7N, H7R, H7F, H9R & H9F

3-SERIES: Models 31F, 33F, 35R, 35F, 37R, 37F, 39R, 39F & 311F

Table of Contents

	Forward	2
Section 1:	General Information	3-8
Section 2:	Safety Precautions	9
Section 3:	Pump & Motor Installation	10-12
Section 4:	Start-Up & Operation	13
Section 5:	Maintenance & Repair	14-36
	Appendix	37-59

© Dec. 2010 **Liquiflo**, All rights reserved

Document No.: 3.20.073

443 North Avenue, Garwood, NJ 07027 USA Tel: 908-518-0777 Fax: 908-518-1847 www.liquiflo.com

Forward

This manual provides instructions for the installation, operation and maintenance of the Liquiflo H-Series and 3-Series Gear Pumps, Sealed Models H1F, H3F, H5R, H5F, H7N, H7R, H7F, H9R & H9F; and 31F, 33F, 35R, 35F, 37R, 37F, 39R, 39F & 311F. It is critical for any user to read and understand the information in this manual along with any documents this manual refers to prior to installation and start-up.

Liquiflo shall not be liable for damage or delays caused by a failure to follow the instructions for installation, operation and maintenance as outlined in this manual.

Thank you for purchasing a Liquiflo product.

LIQUIFLO STANDARD TERMS AND CONDITIONS APPLY UNLESS SPECIFIED IN WRITING BY LIQUIFLO.

Detailed Table of Contents

1. General Information
- 1.1 General Instructions 3
- 1.2 Pump Specifications 4-6
- 1.3 Model Coding 6
- 1.4 Pump Installation. 7
- 1.5 Start-Up 7
- 1.6 Operation & Troubleshooting 7
- 1.7 Maintenance & Repair. 7
- 1.8 Repair Kits & Replacement Parts 8
- 1.9 Returned Goods Authorization (RGA) 8

2. Safety Precautions
- 2.1 General Precautions 9

3. Pump & Motor Installation
- 3.1 Installation of Pump, Motor and Base. 10
- 3.2 General Piping Requirements 10-11
- 3.3 Gear Pump Requirements 11
- 3.4 General Motor Requirements 11-12
  - 3.4.1 Motor Selection. 11-12
  - 3.4.2 Motor Hook-Up. 12
  - 3.4.3 Motor Direction. 12

4. Start-Up & Operation
- 4.1 Precautions Prior to Starting Pump 13
- 4.2 Operating Requirements 13
- 4.3 Troubleshooting. 13

5. Maintenance & Repair
- 5.1 Work Safety 14
- 5.2 Removal from System. 14
- 5.3 Pump Disassembly 15-20
  - Removal of Seals. 15-18
  - Gear-Shaft Disassembly 19-20
  - Removal of Bearing Lock Pins. . . . 20
  - Removal of Bearings. 20
- 5.4 Pump Assembly. 21-31
  - Installation of Bearings. 21
  - Internal Bearing Flush Option. 22
  - Installation of Wear Plates 23-24
  - Installation of Inboard Seal Seat. . . 24
  - Installation of Seals. 25-31
- 5.5 Close-Coupled Configuration 32-36
  - 5.5.1 Disassembly 32-33
  - 5.5.2 Assembly. 33-36

Appendix:
- A-1: Fastener Torque Specifications 37
- A-2: Retaining Ring Tool Specifications. . . 38
- A-3: Wear Allowances. 39-41
- A-4: Operation of Dynamic Seals 42-43
- A-5: Gear-Shaft Assembly. 44-48
- A-6: Reference Drawings. 49-57
- A-7: Troubleshooting Guide 58-59

Section 1: General Information

1.1 General Instructions

This manual covers the H-Series Sealed Gear Pumps, Models H1F thru H9F; and the 3-Series Sealed Gear Pumps, Models 31F thru 39F, and 311F.

The materials of construction of the pump are selected based upon the chemical compatibility of the fluid being pumped. The user must verify that the materials are suitable for the surrounding atmosphere.

If the fluid is non-conductive, methods are available to mechanically ground the isolated shaft. This is only necessary if the surrounding atmosphere is extremely explosive or stray static charges are present.

Upon receipt of your Liquiflo pump:

A) Verify that the equipment has not been damaged in transit.

B) Verify that the pump *Serial Number* is stamped on the pump's rear housing.

C) Verify that the *Liquiflo Stainless Steel Nameplate* is secured to the pump's housing:

D) For ATEX certification, verify that the following *Stainless Steel Tag* is attached to the pump:

Explanation of ATEX Tag	
Group II	Explosive atmospheres
Category 2	Equipment provides a high level of protection. Explosive atmospheres are likely to occur.
Category 3	Equipment provides a normal level of protection. Explosive atmospheres are unlikely to occur.
D	Dust
G	Gas

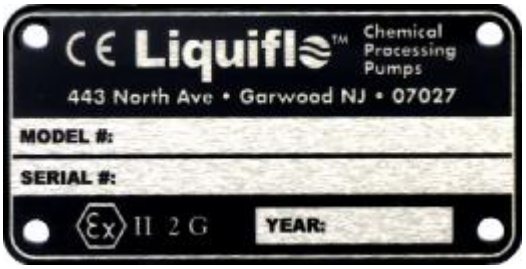

E) Record the following information for future reference:

Model Number:	
Serial Number:	
Date Received:	
Pump Location:	
Pump Service:	

NOTE: By adding a **K** prior to the pump's Model Code, a **Repair Kit** can be obtained which consists of the following parts: mechanical seal with seal seat and gaskets, drive and idler gears, drive and idler shafts, wear plates, bearings, retaining rings, keys, housing alignment pins, bearing lock pins and O-rings.

1.2 Pump Specifications

Table 1A: Performance Specifications (English System Units)

Pump Series	Pump Model	Max Flow	Max Speed	Max DP	Max Viscosity [2]	NPSHR [3]	Dry Lift [3]	TD [4]
	UNITS:	GPM	RPM	PSI	cP	ft	ft	GPR
H-Series	H1F	0.48	1750	225 [1]	100,000	3	0.5	.000276
	H3F	1.45	1750	225 [1]	100,000	2	1.5	.000828
	H5R	2.41	1750	225 [1]	100,000	2	2	.001379
	H5F	3.38	1750	225 [1]	100,000	2	4	.001930
	H7N	5.37	1750	225 [1]	100,000	5.2	6	.003070
	H7R	8.59	1750	225 [1]	100,000	5.2	6	.004910
	H7F	10.7	1750	225 [1]	100,000	5.2	7	.006140
	H9R	15.1	1750	225 [1]	100,000	4	6	.008610
	H9F	21.5	1750	225 [1]	100,000	3	14	.01228
3-Series	31F	0.48	1750	100	100,000	3	0.5	.000276
	33F	1.45	1750	100	100,000	2	1.5	.000828
	35R	2.41	1750	100	100,000	2	2	.001379
	35F	3.38	1750	100	100,000	2	4	.001930
	37R	8.59	1750	100	100,000	5.2	6	.004910
	37F	10.7	1750	100	100,000	5.2	7	.006140
	39R	15.1	1750	100	100,000	4	6	.008610
	39F	21.5	1750	100	100,000	3	14	.01228
	311F	21.5	1750	80	100,000	3	14	.01228

Table 1B: Performance Specifications (SI System Units)

Pump Series	Pump Model	Max Flow	Max Speed	Max DP	Max Viscosity [2]	NPSHR [3]	Dry Lift [3]	TD [4]
	UNITS:	LPM	RPM	bar	mPas	m	m	LPR
H-Series	H1F	1.83	1750	15.5 [1]	100,000	0.9	0.15	.001045
	H3F	5.48	1750	15.5 [1]	100,000	0.6	0.46	.003134
	H5R	9.13	1750	15.5 [1]	100,000	0.6	0.6	.005220
	H5F	12.8	1750	15.5 [1]	100,000	0.6	1.2	.007306
	H7N	20.3	1750	15.5 [1]	100,000	1.6	1.8	.011621
	H7R	32.5	1750	15.5 [1]	100,000	1.6	1.8	.018586
	H7F	40.7	1750	15.5 [1]	100,000	1.6	2.1	.023242
	H9R	57.0	1750	15.5 [1]	100,000	1.2	1.8	.032592
	H9F	81.3	1750	15.5 [1]	100,000	0.9	4.3	.04648
3-Series	31F	1.83	1750	6.9	100,000	0.9	0.15	.001045
	33F	5.48	1750	6.9	100,000	0.6	0.46	.003134
	35R	9.13	1750	6.9	100,000	0.6	0.6	.005220
	35F	12.8	1750	6.9	100,000	0.6	1.2	.007306
	37R	32.5	1750	6.9	100,000	1.6	1.8	.018586
	37F	40.7	1750	6.9	100,000	1.6	2.1	.023242
	39R	57.0	1750	6.9	100,000	1.2	1.8	.032592
	39F	81.3	1750	6.9	100,000	0.9	4.3	.04648
	311F	81.3	1750	5.5	100,000	0.9	4.3	.04648

NOTES:

1 Max ΔP (Differential Pressure) is derated to 125 PSI (8.6 bar) for viscosities < 10 cP (mPas).

2 Fluid viscosities > 150 cP (mPas) should use pumps with trimmed gears to reduce power consumption and increase pump efficiency. High-viscosity fluids may require larger pumps with trimmed gears operating at lower speeds. Consult factory.

3 NPSHR and Dry Lift are Specified @ Max Speed and 1 cP (mPas).

4 TD (Theoretical Displacement) is based on new pump operating @ Max Speed and ΔP = 0.

Table 2: Absolute Temperature & Pressure Ratings

Pump Series	Pump Models	Minimum Operating Temperature		Maximum Operating Temperature (1)		Maximum Operating Pressure (3)	
	UNITS:	°F	°C	°F	°C	PSIG	bar (g)
H-Series	H1F, H3F, H5R & H5F	-40	-40	500	260	300	20.7
	H7N, H7R, H7F, H9R & H9F	-40	-40	500	260	225	15.5
3-Series	31F, 33F, 35R & 35F	-40	-40	500	260	300	20.7
	37R, 37F, 39R, 39F & 311F	-40	-40	500	260	225	15.5

NOTES:

1 The actual maximum surface temperature depends not on the pump but primarily on the temperature of the fluid being pumped. Temperature class can be controlled with the use of thermal sensors. Pump surfaces will be approximately 20 °F (7 °C) above the temperature of the fluid being pumped.

2 Pump is designed to operate within the ambient temperature range of -4 °F (-20 °C) and 104 °F (40 °C).

3 For pumps with ANSI 150# RF Flanges, the Maximum Operating Pressure Rating of the flange is 285 PSIG within the temperature range of -20 to 100 °F. Above 100 °F, derate by 0.29 PSIG/°F.

Table 3: Maximum Torque Specifications (in-lbs)

Parameter	H-Series	H1F	H3F	H5R	H5F	H7N	H7R	H7F	H9R	H9F	
	3-Series	31F	33F	35R	35F		37R	37F	39R	39F	311F
Idler Gear Teflon		—	4	7	10	14	22	27	38	54	54
Idler Gear Carbon		3	9	15	21	28	45	56	79	113	113
Idler Gear Celcon/Delrin		4	11	19	26	36	57	71	99	142	142
Idler Gear PEEK		4	12	20	28	38	61	76	107	153	153
Idler Gear Ryton		4	12	20	28	38	61	76	107	153	153
Double Metal Gears		23	23	74	74	134	189	189	189	189	189

Table 4: Weight Data

Parameter	H-Series	H1F	H3F	H5R	H5F	H7N	H7R	H7F	H9R	H9F		Unit
	3-Series	31F	33F	35R	35F		37R	37F	39R	39F	311F	
Pump Weight*		2.5	2.5	3.5	3.5	6.5	6.5	6.5	8.0	9.8	9.8	lbs
		1.1	1.1	1.6	1.6	2.9	2.9	2.9	3.6	4.4	4.4	kg
Pump Weight with Close-Coupled Option*		23	23	24	24	29	29	29	34	36	36	lbs
		10	10	11	11	13	13	13	15	16	16	kg

***** Weight of pump with threaded ports, excluding motor.

Table 5: Material Data

Component		Material(s)
Pump Housing		316 Stainless Steel, Alloy-20 or Alloy-C
Mounting Hardware		18-8 Stainless Steel
Mounting Bracket (Pedestal)*		Epoxy Painted Cast Iron
Motor Frames (C-Face)		NEMA 56C/56HC, 143/145TC & 182/184TC; IEC 71/80/90 (B5 Flange)
Bearings		Carbon, Carbon-60, Teflon, PEEK or Silicon Carbide (**Note 1**)
Wear Plates		Carbon, Carbon-60, Teflon, PEEK or Ceramic (**Note 1**)
Gears		316 SS, Alloy-C, PEEK, Ryton, Celcon, Delrin, Teflon or Carbon (**Note 1**)
Shafts		316 Stainless Steel or Alloy-C (**Note 2**)
Coating on Shafts		Uncoated, Ceramic Chrome Oxide or Tungsten Carbide
Housing Pins		316 Stainless Steel or Alloy-C (**Note 2**)
Bearing Pins		Teflon, 316 Stainless Steel or Alloy-C (**Note 2**)
Retaining Rings		316 Stainless Steel or Alloy-C (**Note 2**)
Keys		316 Stainless Steel or Alloy-C (**Note 2**)
O-rings/Gaskets		Teflon, Viton, EPDM, Buna-N, Kalrez or 316 SS/PFA Encapsulated
Dynamic Seal	**Packing**	Braided Teflon or Graphoil
	Lip Seal	Viton U-Cup
	Mechanical Seals	Seal Face: Carbon or Teflon ; Seal Seat: Ceramic or Silicon Carbide ; Seal Wedge: Teflon or Graphoil ; Metallic Body: Single Internal: **Note 2** ; External and Double: 316 SS

NOTES: ***** Close-coupled configuration

1 Teflon is 25% glass-filled PTFE.
2 Metallic material will match pump housing material. (Exception: **Note 3**)
3 Alloy-20 pumps will have all metallic internal parts made from Alloy-C.

1.3 Model Coding

A 14-position **Model Code** is used to completely describe a specific sealed pump. This code is required when ordering either a new pump or a repair kit or replacement parts for an existing pump. The table below describes the Model Code and gives a specific example:

Table 6: Sealed Pump Model Code Description & Example

Position #	Description	Pump Model Code Example: H5FS6PEEU000001	
		Code	Selection
1	Pump Model (Size)	H5	Model H5F (H5 = Pump Size; F = Full Capacity)
2	Pump Model (Capacity)	F	
3	Basic Material & Port Type	S	316 SS Housing and Shafts & NPT Ports
4	Drive Gear	6	316 SS Drive Gear
5	Idler Gear	P	PEEK Idler Gear
6	Wear Plates	E	Carbon 60 Wear Plates
7	Bearings	E	Carbon 60 Bearings
8	Sealing Arrangement	U	Carbon/SiC Single Internal Mechanical Seal
9	Bearing Flush	0	No Bearing Flush
10	Shaft Coating	0	No Shaft Coating (Bare 316 SS Shafts)
11	O-rings	0	Teflon O-rings
12	Retaining Rings	0	316 SS Retaining Rings
13	Bearing Pins	0	Teflon Bearing Pins
14	Coupling Method	1	Close-Coupled for 143TC or 145TC Motor Frame

NOTE: See the Liquiflo Product Catalog or the Liquiflo Website (www.liquiflo.com) for complete Model Coding information.

1.4 Pump Installation

During installation of the pump and supporting equipment, follow the guidelines given in **Section 3**. Pay special attention to all cautionary notes in this section.

1.5 Start-Up

Before operating the pump, inspect the system as outlined in **Section 4**. Do not start the pump until the inspection is satisfactory and all safety precautions have been taken.

1.6 Operation & Troubleshooting

The successful and safe operation of a pump is not only dependent on the pump but also on each of the system components. It is therefore important to monitor the entire pumping system during operation and to perform the necessary maintenance to keep the system running smoothly.

A normally operating sealed gear pump will deliver a steady and pulse-less flow, be relatively quiet and have a predictable flow rate based on the pump speed, fluid viscosity and differential pressure across the pump. Refer to the performance curves of the specific pump model being operated (see Liquiflo Product Catalog or website: www.liquiflo.com). Sealed pumps operating normally will have virtually no leakage, except those with packing, which may require some leakage to properly lubricate the seal (see **Appendix 4**). Sealed pumps must not be run dry for more than a few seconds or damage to the seal will result.

If a significant problem is observed during operation, the pump should be stopped so that corrective action can be taken. The observed problem could have several possible causes, and multiple remedies for each cause. For help with problem solving, refer to the Troubleshooting Guide given in **Appendix 7**.

1.7 Maintenance & Repair

The pump has a dynamic seal and internal bearings, wear plates, gears and shafts which require replacement over time due to physical wear. The center housing of the pump may also incur physical wear and require replacement (see **Appendix 3**). O-rings and retaining rings should always be replaced when rebuilding the pump.

Standard repair kits are available to facilitate repair of the pump. A repair kit for a sealed pump includes the following parts: sealing components (packing rings, lip seal or mechanical seal), bearings, wear plates, gear-shaft assemblies, O-rings and gaskets, bearing lock pins and housing alignment pins. The single mechanical seal includes the seal seat and the double mechanical seal includes both the inboard and outboard seal seats.

Before performing maintenance on the pump, review the safety precautions given in **Section 2**. Removal of the pump from the piping system is covered in **Section 5.2**. To disassemble a bare sealed pump, follow the procedure in **Section 5.3**. To replace the seal or other parts of the pump, follow the assembly procedure in **Section 5.4**. Maintenance of pumps with the *close-coupled configuration* is covered in **Section 5.5**. When performing maintenance, pay special attention to all cautionary notes given in these sections.

1.8 Repair Kits & Replacement Parts

Repair kits and replacement parts for the pumps can be purchased from your local Liquiflo distributor. Refer to **Appendices 5** and **6** for individual parts information.

1.9 Returned Goods Authorization (RGA)

If it is necessary to return the pump to the factory for service,

1) Contact your local Liquiflo distributor to discuss the return, obtain a Returned Goods Authorization Number (**RGA #**) and provide the distributor with the required information (see RGA Record below).
2) Clean and neutralize pump.
3) Package the pump carefully and include the **RGA #** in a visible location on the outside surface of the box.
4) Ship pump to factory, freight prepaid.

Returned Goods Authorization (RGA) Record		
1	**RGA #**	**(Supplied by Distributor)**
2	**Distributor Name**	
3	**Order Date**	
4	**Customer PO#**	
5	**Return Date**	
6	**Item(s) Returned**	
7	**Serial Number(s)**	
8	**Reason for Return**	
9	**Fluid(s) Pumped**	
10	**Notes**	

NOTE: Pump must be cleaned and neutralized prior to shipment to the factory.

Section 2: Safety Precautions

2.1 General Precautions

- **Always** lock out the power to the pump driver when performing maintenance on the pump
- **Always** lock out the suction and discharge valves when performing maintenance on the pump
- **Never** operate the pump without safety devices installed
- **Never** operate the pump with suction and/or discharge valves closed
- **Never** operate the pump out of its design specifications
- **Never** start the pump without making sure that the pump is primed
- **Never** use heat to disassemble pump
- Inspect the entire system before start-up
- Monitor the system during operation and perform maintenance periodically or as required by the application
- Decontaminate pump using procedures in accordance with federal, state, local and company environmental regulations
- Before performing maintenance on the pump, check with appropriate personnel to determine if skin, eye or lung protection is required and how best to flush the pump
- When performing maintenance, pay special attention to all cautionary statements given in this manual. **Failure to observe safety precautions can result in personal injury, equipment damage or malfunction.** Cautionary statements will have the following format:

CAUTION! (Statement)

Section 3: Pump & Motor Installation

3.1 Installation of Pump, Motor and Base

Refer to the Hydraulic Institute Standards for proper installation procedures of the base, pump and motor. Observe the following guidelines:

1) The foundation area must be rigid and level for maintaining pump alignment.

2) The pump and motor assembly must be securely fastened to the base, and the base must be securely attached to the ground.

3) For long-coupled pumps, the pump and motor shafts must be manually aligned to eliminate excessive radial loads on the pump that will cause vibration and lead to premature pump failure. (Note: If the pump was delivered as a complete long-coupled assembly, it was properly aligned at the factory.) Alignment should be checked by taking measurements at the coupling. Flexible couplings are not intended to compensate for misalignment. Therefore, both angularity and parallelism should be checked and, if necessary, corrected. If these are off by more than 0.015 inches (0.4 mm), the assembly should be realigned. (Note: For sealed pumps with *close-coupled configuration*, no alignment procedure between the pump and motor is required.)

4) The flexible insert of the mechanical coupling between the pump and motor must be free to move axially – a distance of 1/16 to 1/8 inches – to prevent axial loads from being applied to the pump.

5) For long-coupled pumps, after the pump and motor shafts have been properly aligned, install the coupling guard over the mechanical coupling and fasten to the base plate. (Note: If the pump was delivered as a complete long-coupled assembly, the coupling guard was properly installed at the factory.)

CAUTION! Do not operate the pump unless the Coupling Guard has been properly installed on the base plate.

6) The pump inlet should be as close to the liquid source as practical and preferably below it.

7) The pump and motor should be accessible for servicing and inspection.

8) The pump and motor should be cleaned periodically to prevent the build-up of dust.

3.2 General Piping Requirements

Guidelines for piping are given in the Hydraulic Institute Standards and should be reviewed prior to pump installation.

1) All piping must be supported independently and must line up naturally with pump ports.

CAUTION! Do not use the pump to support the piping or allow the piping to apply stress to the pump ports. This can distort the alignment of the pump housing with internal parts and lead to rapid wear or malfunction.

2) Piping runs should be designed to minimize friction losses.

3) Suction and discharge piping should be the same size or larger than the inlet and outlet ports.

4) The piping should be arranged to allow the pump to be flushed and drained prior to the removal of the pump for servicing. Valves and unions should be installed to allow the pump to be isolated during maintenance.

5) The piping system should be thoroughly cleaned prior to installation of the pump.

3.3 Gear Pump Requirements

1) A positive displacement pump should have a **pressure relief valve** installed in the discharge line. The relief valve should be the closest valve to the discharge port of the pump and should bypass the discharge line back to the supply tank.

2) The maximum particle size capable of being passed by the pumps is 37 microns. When pumping fluids containing solids, a **filter** of at least 400 U.S. Mesh should be installed in the suction line.

3) Concentration of solids should be limited to 1% by volume. Exceeding 1% can cause the wear rate to increase to an unacceptable level, resulting in a rapid decrease in pump performance. In addition to solids concentration, the specific wear rate also depends on the size, shape and hardness of the particles, the operating speed and the materials used to construct the pump.

3.4 General Motor Requirements

1) The motor must be compatible with the pump and conditions of the application.

2) The motor supply voltage must match the nameplate voltage of the motor.

3) The motor should never be operated outside of its design specifications.

4) The motor should be inspected periodically and serviced or replaced as required.

CAUTION! Lock out power to the motor before servicing or replacing.

3.4.1 Motor Selection

1) For sealed pumps with *close-coupled configuration*, the motor frame must be compatible with the pump mounting bracket. Choices are NEMA 56C, 56HC, 143TC, 145TC, 182TC & 184TC, and IEC 71, 80 & 90 (B5 flange). NEMA 182/184TC motor frames will require an *adapter plate* (P/N SP0046) and four *adapter mounting bolts* (P/N 641105) to mount the motor to the bracket. (Note: Complete close-coupled pumps ordered for use with NEMA 182/184TC motor frames will be supplied with the adapter plate and adapter mounting bolts.)

2) The motor must have an enclosure that is compatible with the application conditions. If an explosion-proof motor is required, the *temperature code* of the motor must be acceptable for the fluid that will be pumped.

3) The speed and power output rating of the motor must be sufficient for the conditions of service. The power output rating of the motor should exceed the maximum power that will be required by the pump over its operating range.

3.4.2 Motor Hook-Up

1) Electrical wiring of the motor should be performed by a certified electrician.

2) Follow the recommendations of the motor manufacturer and observe all electrical wiring safety standards.

3) The motor supply voltage must match the motor nameplate voltage or serious motor damage or fire can result.

CAUTION! Lock out power to the motor before connecting to power line.

3.4.3 Motor Direction

The motor shaft is mechanically coupled to the drive shaft of the pump. Both shafts will turn in the same direction. Because the gear pump is bi-directional, the pump shaft can turn in either direction to produce flow in either direction. The direction of rotation of the motor shaft (same as that of the pump drive shaft) will determine which side of the pump is the *inlet* (suction side) and which side is the *outlet* (discharge side). For the pump models covered in this manual, the flow direction will be as shown below:

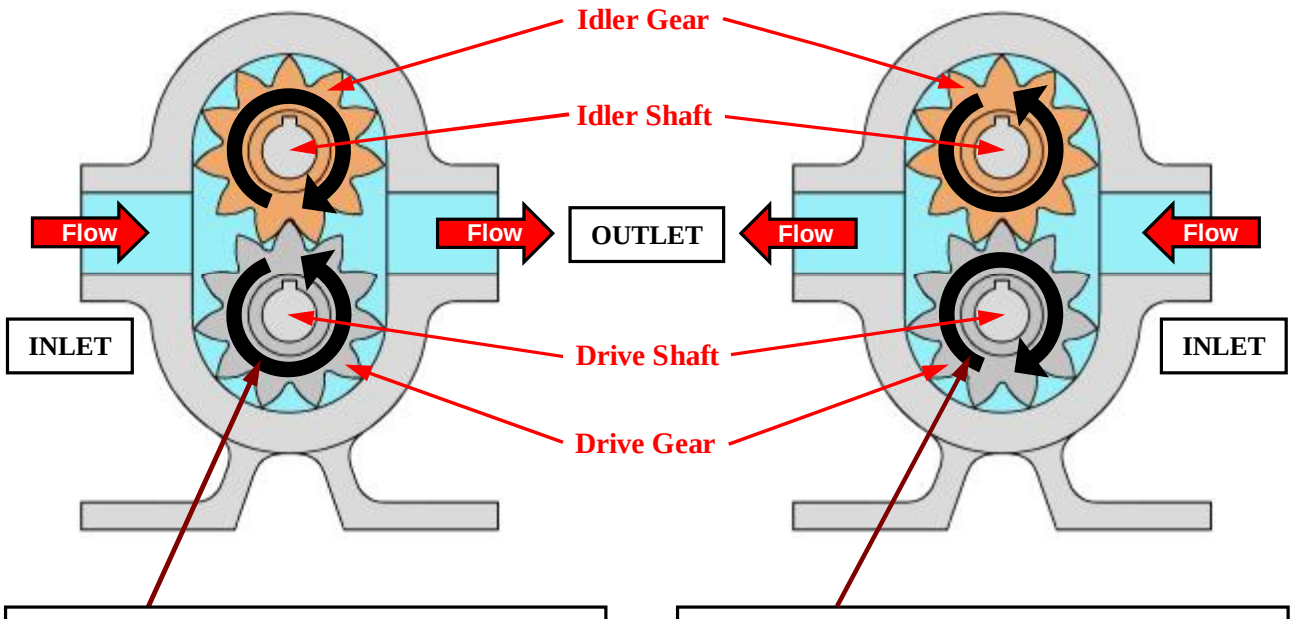

Counterclockwise Rotation of Motor Shaft:

Fluid will enter the pump at the left side (inlet) and be discharged at the **right** side (outlet).

Clockwise Rotation of Motor Shaft:

Fluid will enter the pump at the right side (inlet) and be discharged at the **left** side (outlet).

Section 4: Start-Up & Operation

4.1 Precautions Prior to Starting Pump

1) Verify that the pump and motor are suitable for the conditions of service.

2) Verify that all suction and discharge valves are open before starting the pump.

3) Prime the pump and jog the motor to check the rotation. As viewed from the pump end, a clockwise rotation of the motor will result in fluid discharge to the left; counterclockwise rotation will result in fluid discharge to the right (see Page 12).

4) The pump is capable of pulling a dry lift, but it is still recommended that the pump be primed prior to starting.

5) A **pressure relief valve** should be installed in the discharge line to protect the pump from any kind of line blockage including the inadvertent closing of an isolation valve.

6) If the fluid contains suspended solids, a **filter** of at least 400 U.S. Mesh should be installed in the suction line. Concentration of solids should be limited to 1% by volume.

7) Ensure that all safety devices are installed before operating pump (i.e., coupling guard, etc.).

4.2 Operating Requirements

1) Do not operate the pump without fluid inside it.

CAUTION! Do not run pump dry for more than a few seconds or damage to the seal will result. Extended dry running can damage other internal parts.

2) The pump should be operated with at least 20 PSI (1.4 bar) differential pressure to ensure that internal components are properly lubricated by the pumped fluid.

3) Adequate suction pressure must be available for the pump to function properly (see NPSHR data on Page 4).

4) Do not operate the pump outside of its design specifications (see Pages 4 and 5).

4.3 Troubleshooting

During pump operation, inspect for:

(1) Unusual noise
(2) Product leakage
(3) Expected suction and discharge pressures
(4) Product flow

If any problems are encountered with the above items, stop the pump and take corrective action. For help with troubleshooting, refer to **Appendix 7**.

Section 5: Maintenance & Repair

The pump has internal bearings, wear plates, gears, shafts and a dynamic seal (i.e., mechanical seal, lip seal or packing) which require replacement over time due to physical wear. The center housing of the pump may also incur physical wear and require replacement (see **Appendix 3**). O-rings and retaining rings should always be replaced when rebuilding the pump.

5.1 Work Safety

Before performing maintenance, review the safety precautions given in **Section 2** (see Page 9).

5.2 Removal from System

Before servicing, prepare the pump as follows:

CAUTION! If the pump was used to move hazardous or toxic fluids, it must be flushed and decontaminated prior to removal from the system piping. Refer to the Material Safety Data Sheet (MSDS) for the liquid and follow all prescribed safety precautions and disposal procedures.

1 Flush the pump.

2 Stop the motor and lock out the electrical panel.

CAUTION! Be certain the pump's motor switch is in the OFF position and the power to the motor is locked out.

3 Close the suction and discharge isolation valves.

4 Disconnect the pump from the system piping and remove any residual liquid remaining in the pump. For close-coupled pumps, drain the seal housing by removing the 1/8" NPT plug on the pump's front housing (see photo below).

Location & Removal of Drain Plug for Close-Coupled Pumps

To drain the seal housing, remove the **1/8" NPT plug** that is located near the bottom of the pump's front housing (see photo).

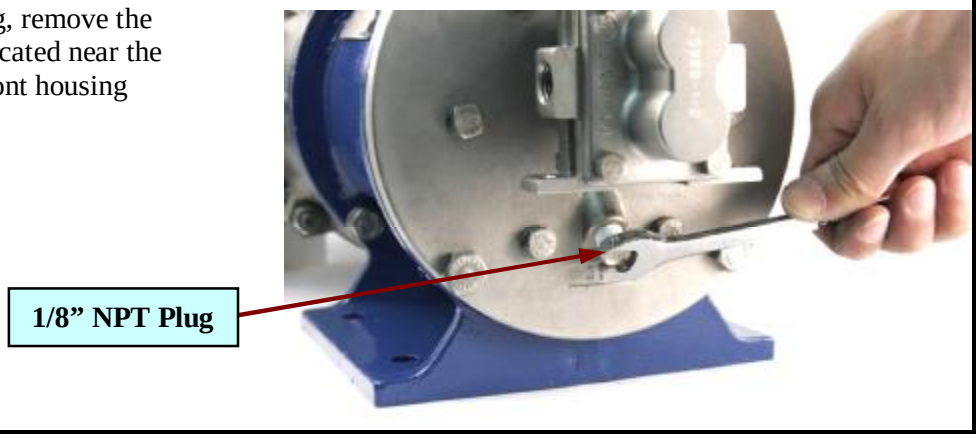

5.3 PUMP DISASSEMBLY

Follow the procedure below and refer to the drawings in **Appendix 6**.

---

1 Remove the pump mounting bolts; then separate the pump from the base or riser.

NOTE: A long-coupled pump & motor assembly (without coupling guard) is shown at right. The coupling setscrews do not have to be loosened to remove the pump. The sealed pumps usually have two mounting bolts; exceptions are Models H9F, 39F and 311F, which have four mounting bolts.

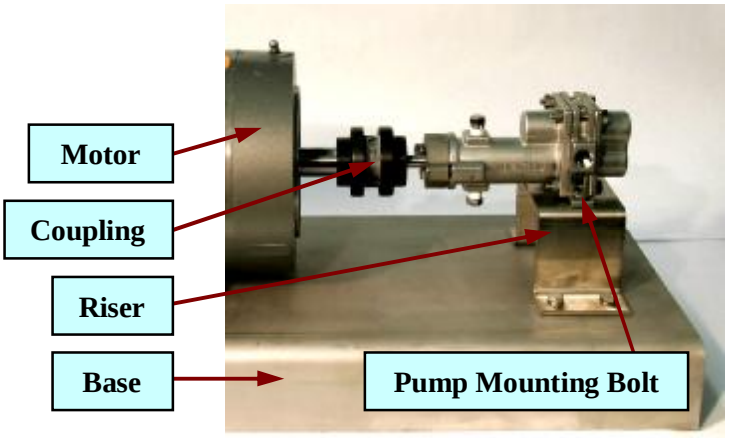

---

2 Remove the coupling flange from the pump shaft by loosening the setscrew.

3 Inspect the end of the drive shaft and remove any high spots, scratches or burrs.

NOTE: Irregularities in the surface of the drive shaft can be caused by the tightening of the coupling setscrews during assembly. If necessary, polish the shaft with very fine sandpaper. This will aid in the removal and installation of the mechanical seal and prevent damage to the Teflon seal wedge.

REMOVAL OF SEALS:

4 The pump can have any one of five different types of seals installed. Remove the pump's seal by referring to the applicable section given below:

Section	Seal Removal	Page #	Reference Drawing	Page #
A	Packing Seal	16	Sectional #1	49
B	Lip Seal	16	Sectional #2	50
C	Single Internal Mechanical Seal	17	Sectional #3	51
D	External Mechanical Seal	17	Sectional #4	52
E	Double Mechanical Seal	18	Sectional #5	53

NOTE: If only the seal needs replacing, proceed directly to the Installation of Seals section (Pages 25 to 31) after removing the seal. If other parts need replacing, continue the disassembly procedure (see Page 19).

A: **Packing Removal** (Refer to Sectional Drawing #1 – Page 49)

A1 Remove the two screws (16) and separate the gland plate (17) from the pump.

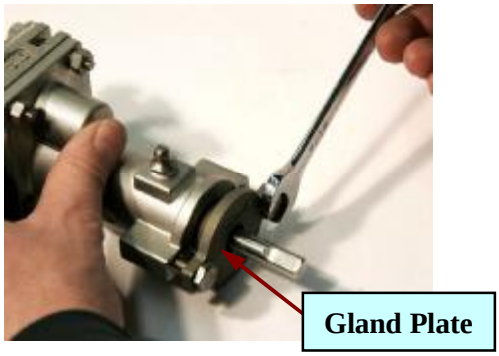

A2 Remove the housing bolts (4).

A3 Lift off the front housing (8), as shown.

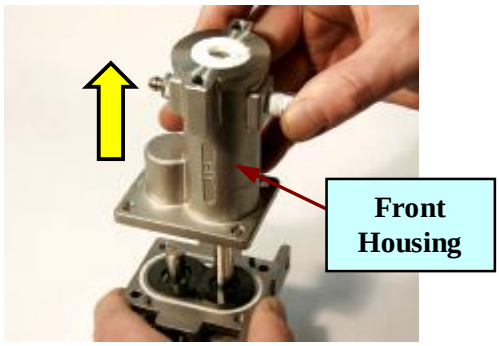

A4 Remove the packing (18) and lantern ring (11) from the front housing.

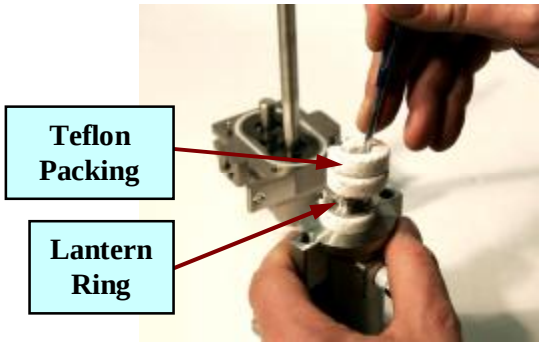

NOTE: The packing and lantern ring can be pulled out using a hooked tool, as shown.

B: **Lip Seal Removal** (Refer to Sectional Drawing #2 – Page 50)

B1 Remove the two screws (16) and separate the gland plate (17) from the pump.

B2 Remove the housing bolts (4) and then lift off the front housing (8) from the center housing (21).

B3 Remove the lip seal (11) from the front housing (8).

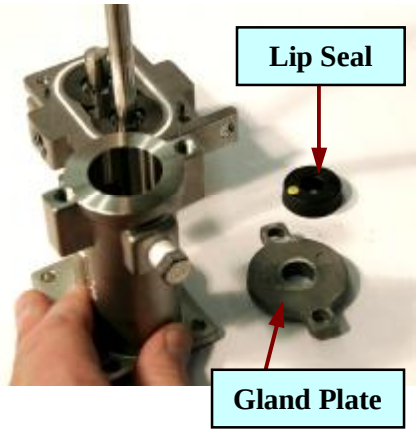

C: Single Internal Mechanical Seal Removal (Refer to Sectional Drawing #3 – Page 51)

C1 Remove the two screws (16) and separate the gland plate (17) and seal seat (24) from the pump. Remove the gaskets (18) from the seal seat and discard.

C2 Remove the 1/8" NPT plug (9).

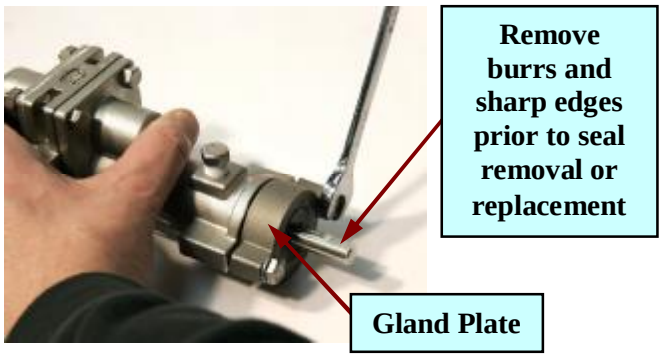

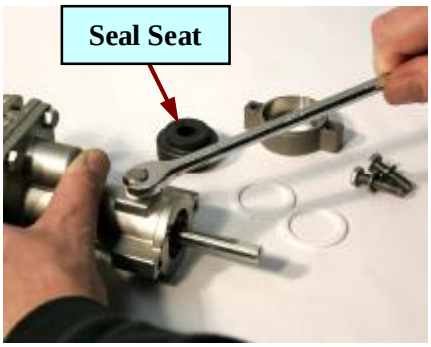

C3 Loosen **all** setscrews on the mechanical seal body (11).

C4 Slide the mechanical seal (11) out of the front housing (8) and remove it from the drive shaft.

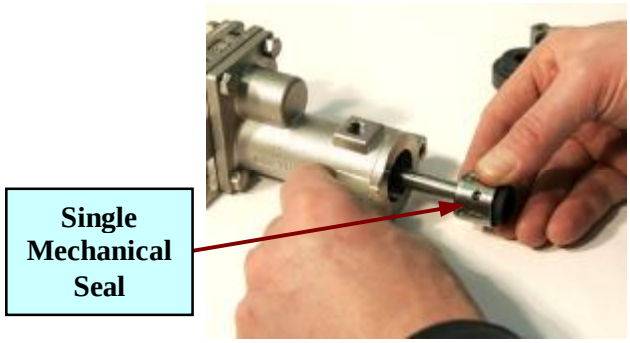

NOTE: The setscrews are accessible thru the 1/8" NPT port on the front housing. Rotate the shaft to access the setscrews.

NOTE: Prior to removal or replacement of the seal, be sure to remove any burrs from the end of the drive shaft by polishing the the shaft with very fine sandpaper.

D: External Mechanical Seal Removal (Refer to Sectional Drawing #4 – Page 52)

D1 Loosen **all** setscrews on the body of the mechanical seal (11).

D2 Remove the mechanical seal from the drive shaft (20).

NOTE: Prior to removal or replacement of the seal, be sure to remove any burrs from the end of the drive shaft by polishing the shaft with very fine sandpaper.

E: **Double Mechanical Seal Removal** (Refer to Sectional Drawing #5 – Page 53)

E1 Remove the two screws (16) and separate the gland plate (17) and outer seal seat (24) from the pump. Remove the gaskets (18) from the seal seat and discard.

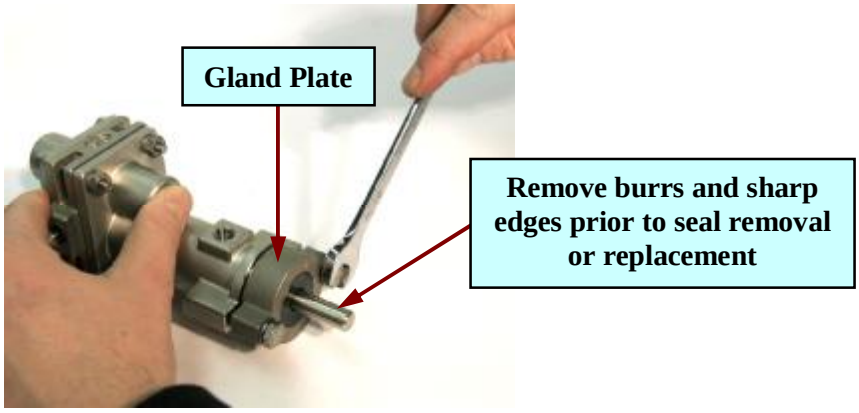

E2 Loosen **all** setscrews on the mechanical seal body (11).

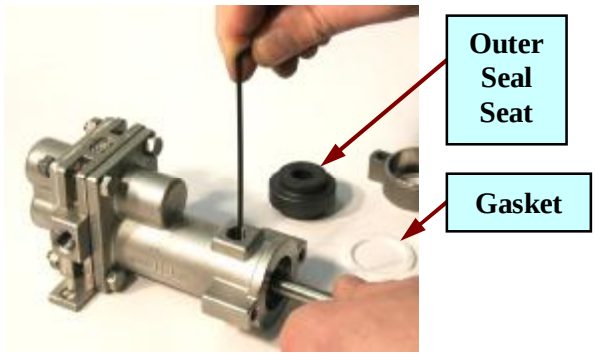

E3 Remove the housing bolts (4).

NOTE: The setscrews are accessible thru the 1/8" NPT port on the front housing. Rotate the drive shaft to access the setscrews.

E4 Remove the double mechanical seal (11) from the drive shaft (20) by lifting off the front housing (8), as shown.

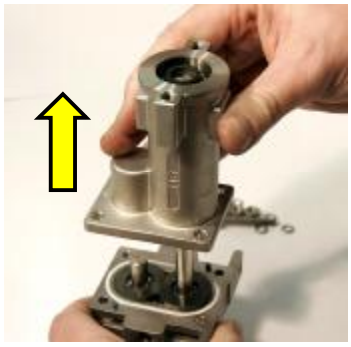

E5 Press out the inner seal seat (25) from the front housing. Discard the seal seat O-ring (26).

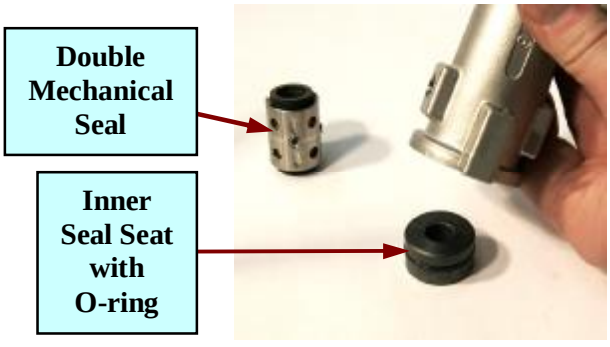

NOTE: Prior to removal or replacement of the seal, be sure to remove any burrs from the end of the drive shaft by polishing the shaft with very fine sandpaper.

Disassembly Procedure: (Continued)

5 If not already done, remove the four housing bolts (4) and separate the front housing (8), center housing (21) and rear housing (2).

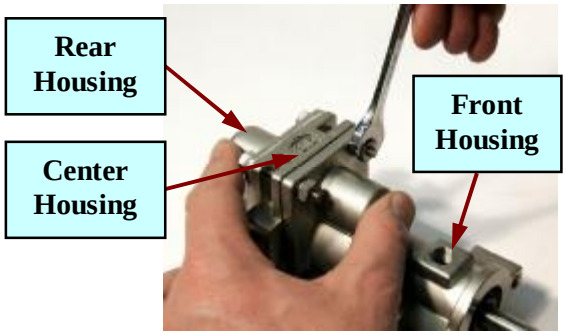

---

6 Remove the wear plates (7), housing pins (12) and the drive and idler gear-shaft assemblies. Remove the O-rings (5) from the center housing (21) and discard.

NOTE: Liquiflo Repair Kits come with the gears and shafts preassembled. If you are using a repair kit to rebuild the pump, it is not necessary to separate the gears from the shafts. If this is the case, skip **Step 7** and proceed directly to **Step 8**.

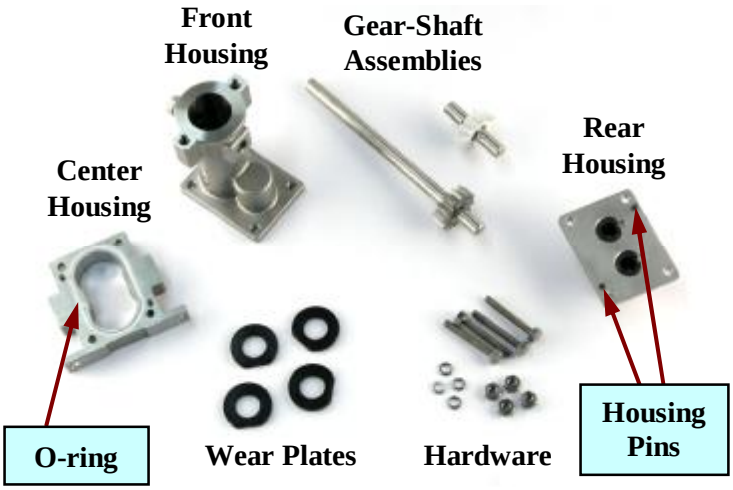

Gear-Shaft Disassembly:

7

CAUTION! Be careful not to damage the drive and idler shafts.

a. Remove one retaining ring (14) from the shaft (1 or 20).

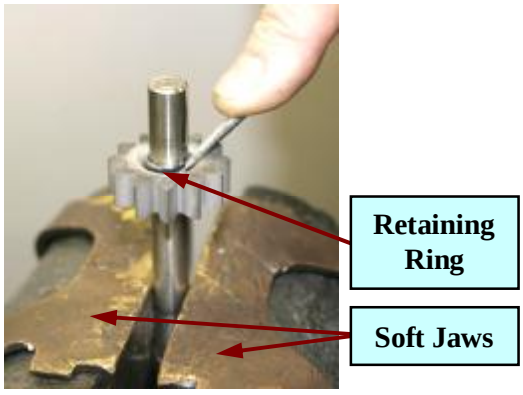

NOTE: Use special vice jaws made of aluminum, bronze, brass or other soft material so as not to dent or damage the shaft (see photo above).

b. Separate the gear (6 or 22) and key (23B or 23A) from the shaft.

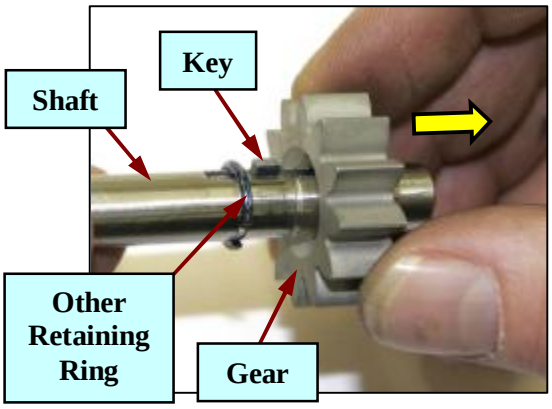

---

c. Remove the other retaining ring (14) from the shaft.

NOTE: One method for removing the retaining ring is shown at right. First bridge the shaft with a close fitting open-end wrench and then strike the wrench handle with a mallet to dislodge the retaining ring from the groove (see photo).

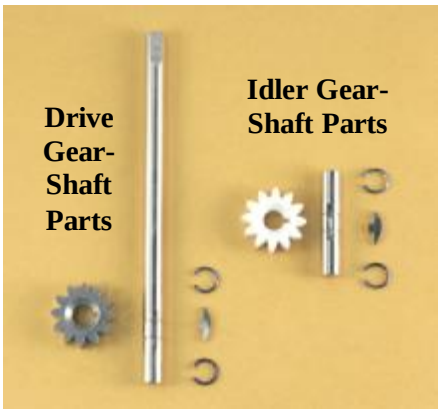

Removal of Bearing Lock Pins:

8 Remove the bearing lock pins (13) from the front and rear housings.

NOTE: If the pins are made of Teflon, a pointed tool can be used to extract them, as shown. If the pins are metallic, the bearings should be removed first (see **Step 9**).

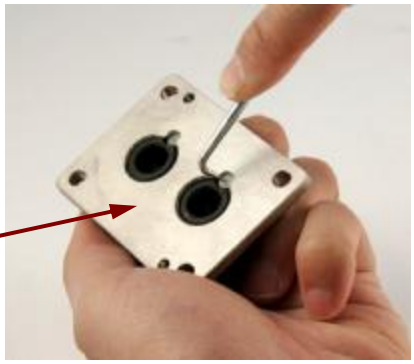

Removal of Bearings:

Most bearings for these pumps were designed to have a light press fit into the front and rear housings. Removal is generally accomplished by destroying the bearings. The bearings can be pulled out using a hooked tool (see Photos **9a** and **9b**). Plastic bearings, such as Teflon, can also be extracted by using a tap that is slightly larger than the bearing inner diameter (see Photo **9c**).

9 Remove the bearings (3A and 3B) from the front and rear housings.

CAUTION! Be careful not to damage the housing bores when removing the bearings.

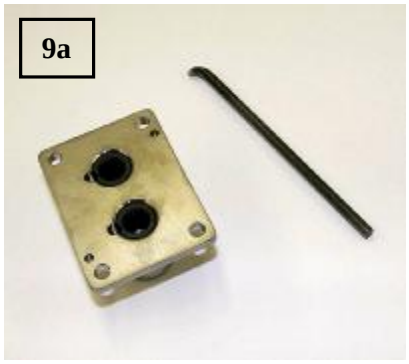

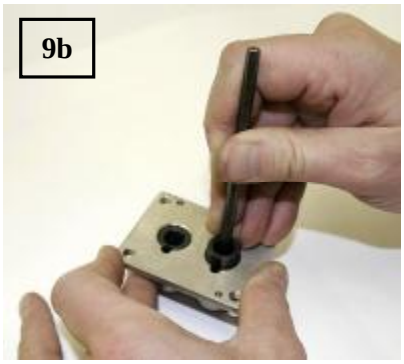

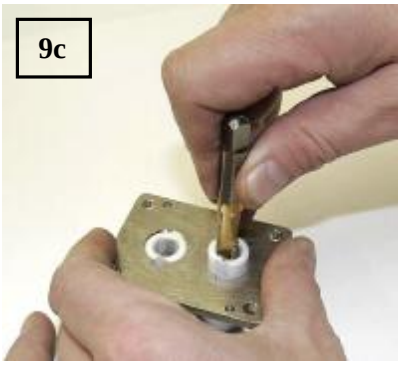

END OF DISASSEMBLY PROCEDURE

5.4 PUMP ASSEMBLY

Follow the procedure below and refer to the drawings in **Appendix 6**.

Installation of Bearings into Front and Rear Housings:

1 Insert the bearings (3A & 3B) into the housing bores while aligning the grooves for the bearing lock pins.

NOTE: If the bearings have not yet been removed from the front and rear housings, refer to **Step 9** of the disassembly procedure (see Page 20). The bearings normally require a light press fit to insert them into the housings. A mechanical press can be used to facilitate this process (see photos).

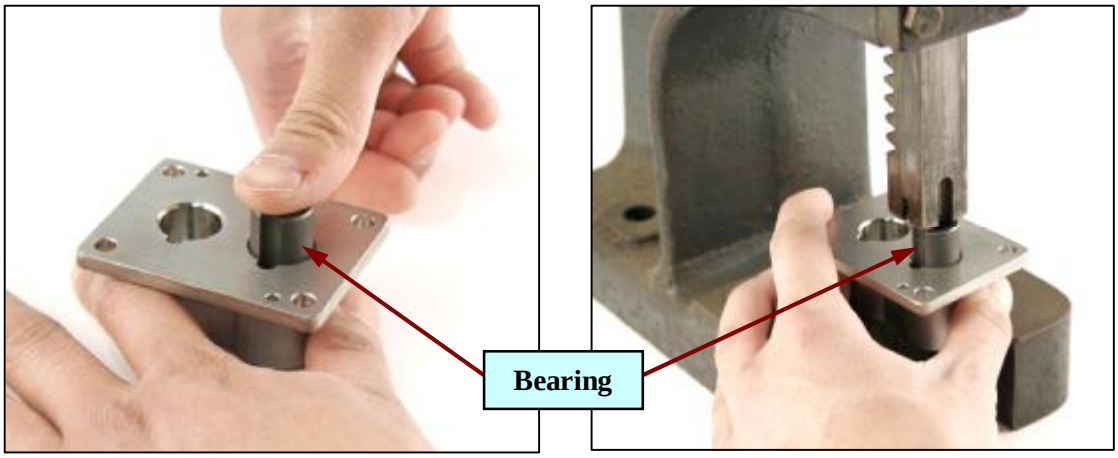

---

2 Insert the bearing lock pins (13) into the front and rear housings.

NOTE: The pins serve to prevent the bearings from rotating. They are normally made of Teflon. Metallic pins are available for high temperature applications.

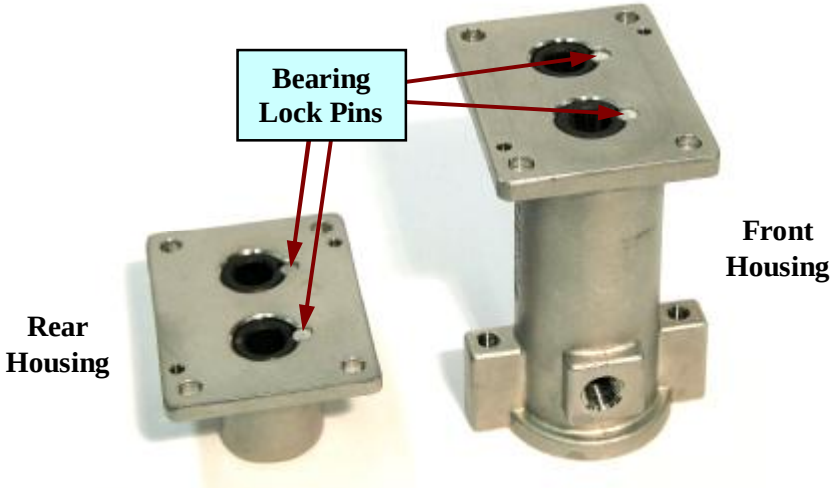

NOTE: Standard housings (i.e., not containing bearing flush grooves) are shown above. Pumps ordered with the Internal Bearing Flush (IBF) option will have modified front and rear housings (see top of Page 22).

Internal Bearing Flush Option

Pumps ordered with the Internal Bearing Flush (IBF) option will have **modified front and rear housings**, as shown at right. The purpose of the IBF option is to more effectively lubricate and cool the bearings when pumping extremely thin or extremely thick liquids. When assembling the pump, the IBF grooves must be oriented on the higher pressure discharge side of the pump.

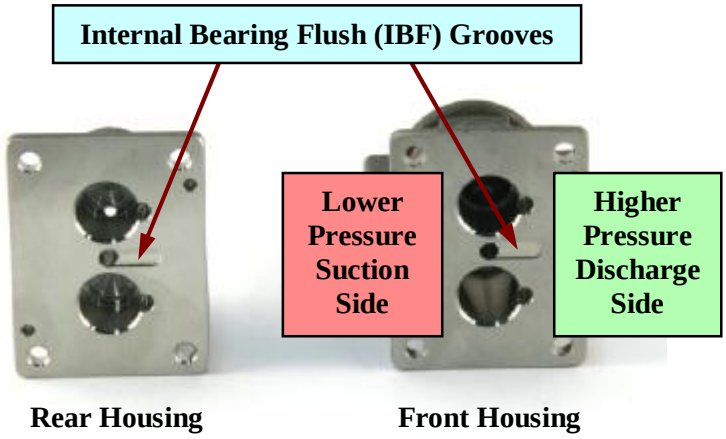

3 Insert two housing alignment pins (12) into the rear housing (2), as shown.

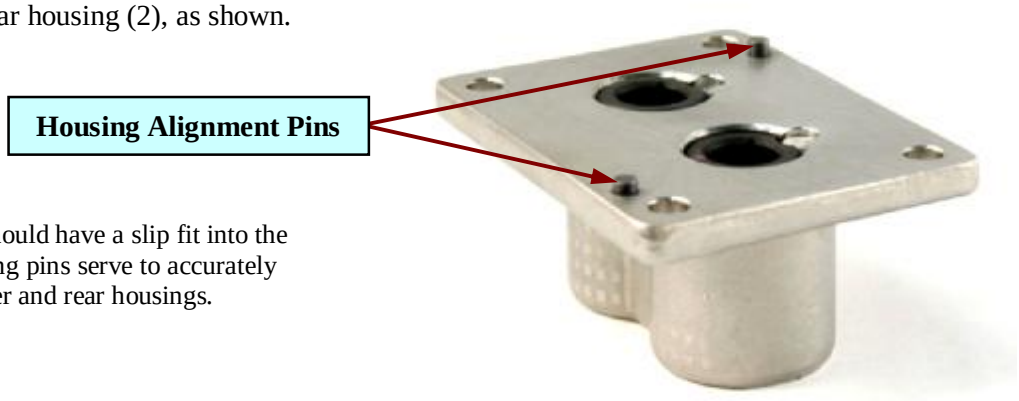

NOTE: The pins should have a slip fit into the housing. The housing pins serve to accurately align the front, center and rear housings.

---

4 Install housing O-rings (5) into the racetrack-shaped grooves of the center housing (21).

CAUTION! Do not reuse O-rings.

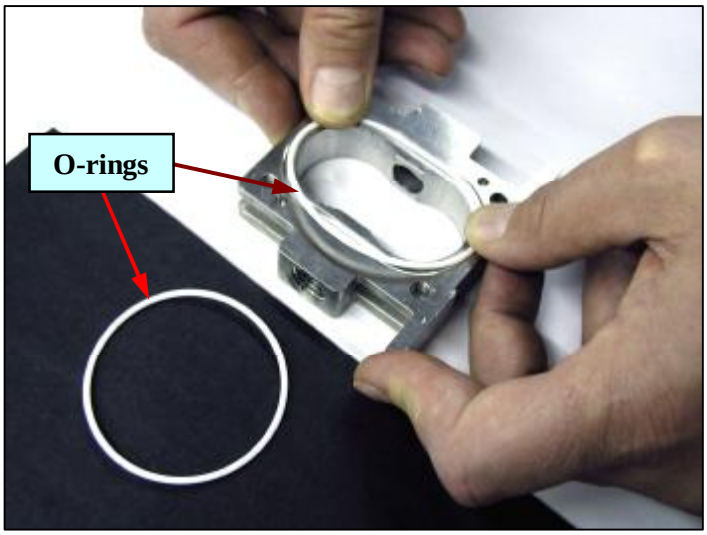

Installation of Wear Plates

Most Liquiflo wear plates are manufactured with cut-outs or grooves to provide liquid relief paths to reduce hydraulically induced gear separation forces that exist during pump operation. These forces decrease pump life by placing significant loads on the shafts and bearings. To be effective, the relief grooves must face toward the gears.

NOTE: Failure to orient the wear plates properly will reduce the operating life of the pump.

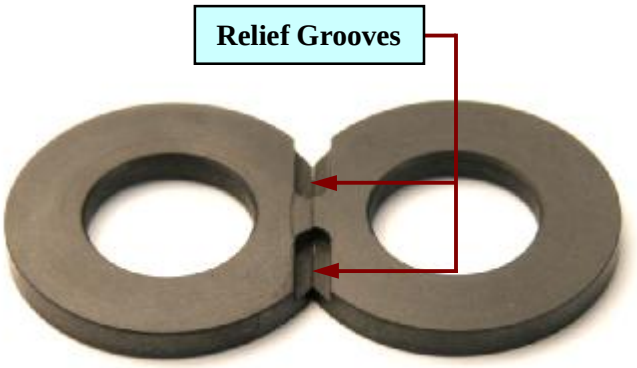

5 Place the center housing (21) onto the rear housing (2) with orientation as shown.

NOTE: Make certain the center housing seats properly over the housing alignment pins. If the rear housing has an IBF groove, the groove must face towards the discharge side of the pump (see Page 22).

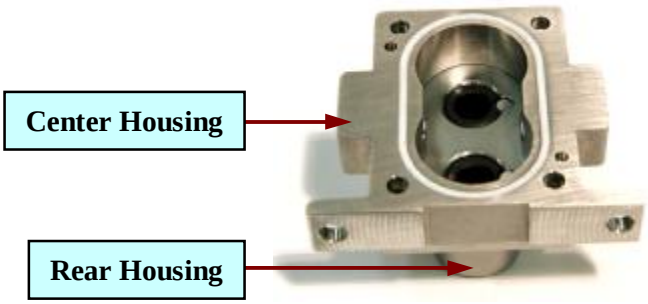

---

6 Place two wear plates (7) into position, as shown.

NOTE: If the wear plates are relieved, the cut-outs must face up (see photo). This will orient the relief grooves toward the gears.

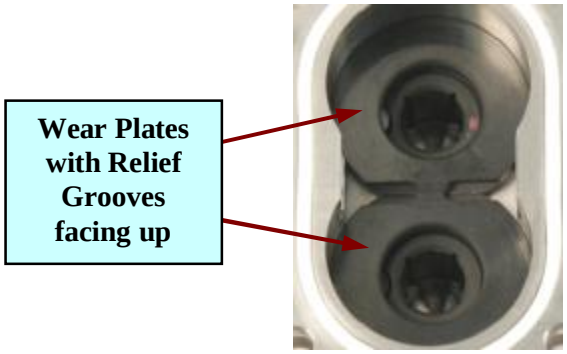

---

7 Insert the gear-shaft assemblies into the housing, as shown.

NOTE: Liquiflo Repair Kits contain the gears and shafts preassembled, as shown below. If the gears and shafts are not assembled, see **Appendix 5** for the assembly procedure.

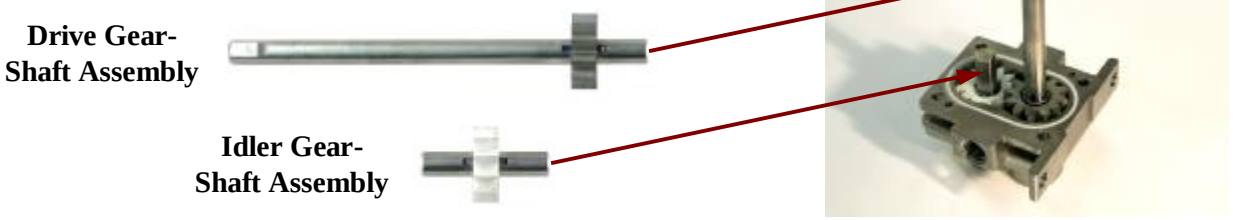

---

8 Place two wear plates (7) on top of the gears, as shown.

NOTE: If the wear plates are relieved, the cut-outs must face down, toward the gears.

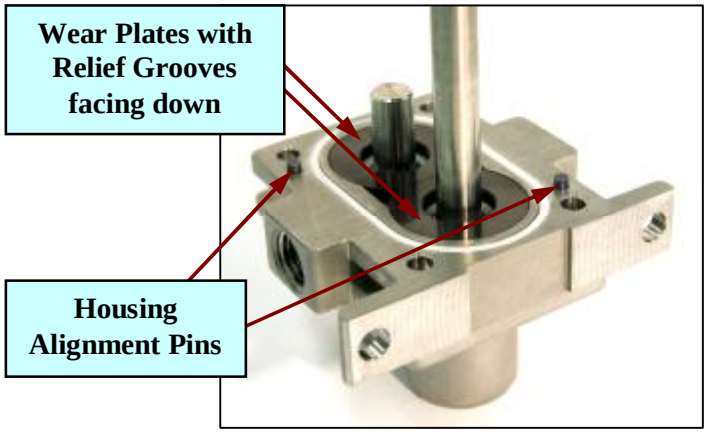

9 Insert two housing alignment pins (12) into the center housing.

NOTE: Perform **Step 10** only if the pump will be assembled with a double mechanical seal. For all other seal types, proceed directly to **Step 11**.

Installation of Inboard Seal Seat (Double Mechanical Seal Only):

10 **a.** Install the seal seat O-ring (26) onto the seal seat (25); then lubricate the outside surface of the O-ring.

NOTE: Use a lubricant that is compatible with the elastomer and the fluid that will be pumped. This will ease installation of the seal seat into the front housing.

CAUTION! Do not reuse O-rings.

---

b. Insert the inner seal seat (25) into the front housing (8).

c. Press the seal seat firmly into the bottom of the housing.

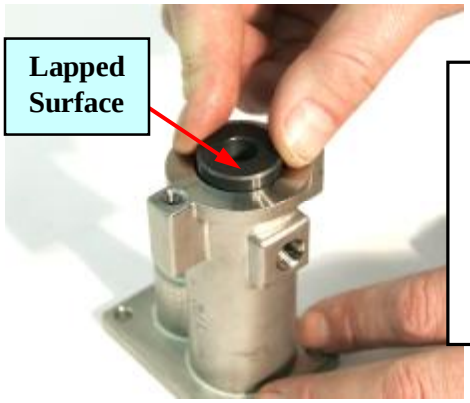

CAUTION! The lapped surface of the Seal Seat must face the Mechanical Seal.

NOTE: The lapped (polished) surface of the seal seat must be directed upwards. Depending on the pump model, seal seats may be lapped on one or both sides.

---

11 Install the front housing (8) to the center-rear housing, as shown.

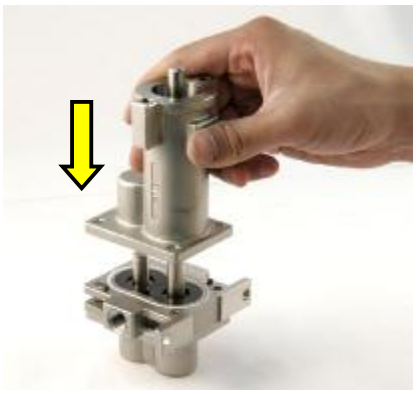

NOTE: Be certain the front housing seats properly over the housing alignment pins in the center housing. If the pump has an IBF option, the IBF grooves in the front and rear housings must be oriented on the discharge side of the pump (see top of Page 22).

---

12 Attach the housings together using four sets of bolts (4), nuts (10) and lockwashers (15).

NOTE: Apply anti-seize compound to the bolts. Refer to **Appendix 1** for the torque specifications of the fasteners. When tightening the bolts, use a star pattern torque sequence on the fasteners to ensure even compression on the O-ring's surface. With Teflon O-rings, repeat this process several times, waiting between retightening. This is necessary because the Teflon will cold flow and require a certain amount of time to properly seat. Continue the process until the bolts no longer require retightening.

---

13 Turn the drive shaft by hand to ensure that the gears will rotate freely inside the housing.

INSTALLATION OF SEALS:

14 The pump can have any one of five different types of seals. Install the appropriate seal by referring to the applicable section given in the table below:

Section	Seal Installation	Page #(s)	Reference Drawing	Page #
A	Packing Seal	26	Sectional #1	49
B	Lip Seal	27	Sectional #2	50
C	Single Internal Mechanical Seal	28-29	Sectional #3	51
D	External Mechanical Seal	30	Sectional #4	52
E	Double Mechanical Seal	31	Sectional #5	53

A: **Packing Installation** (Refer to Sectional Drawing #1 – Page 49)

Packing

The "stuffing box" section of the pump's front housing requires five rings of packing and a lantern ring, positioned as shown in Sectional Drawing #1. The lantern ring allows grease or flush fluid to enter the pump and lubricate the packing. The standard packing material is braided Teflon, which is suitable for application temperatures up to 350°F. Above 350°F, Graphoil packing should be used.

The Teflon packing used in Liquiflo pumps has a split-ring design. Adjacent rings should be staggered by 180° to increase performance and minimize leakage. Graphoil packing has a solid-ring design and therefore does not require staggering.

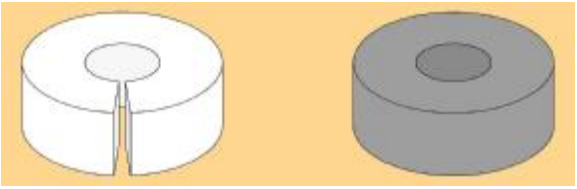

Teflon Packing Ring **Graphoil Packing Ring**

A1 Insert the first three packing rings (18) into the front housing (8).

NOTE: Be sure to stagger the splits in adjacent rings 180° apart.

A2 Install the lantern ring (11).

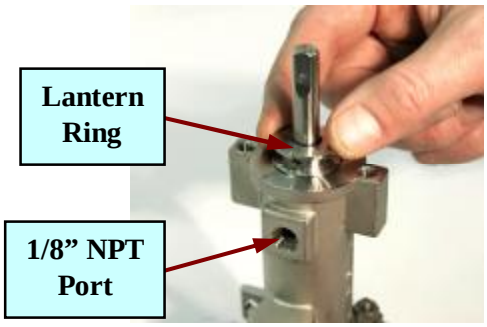

NOTE: After installation, the lantern ring should be visible thru the 1/8" NPT ports.

A3 Install the two remaining packing rings (18); then install the gland plate (17) using the gland screws (16). Tighten the screws by hand.

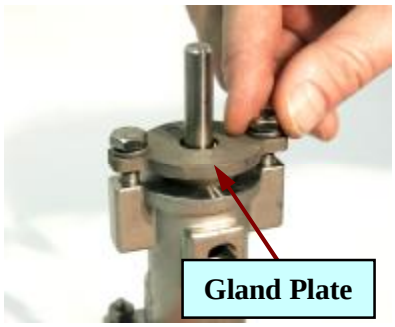

CAUTION! Do not overtighten the gland screws. Tighten by hand only.

NOTE: Stagger the splits in the rings by 180°. The compression of the packing must be adjusted during pump operation (see **Appendix 4**).

A4 Install the grease fitting (24) and plug (9) into the front housing.

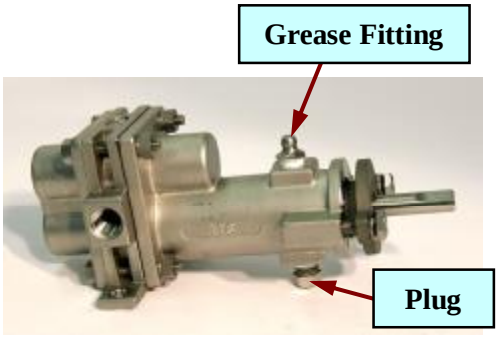

Pump with Packing Seal

NOTE: Apply Teflon tape to the threads of the fitting and plug to prevent leakage.

B: Lip Seal Installation (Refer to Sectional Drawing #2 – Page 50)

B1 Place the lip seal (11) on the drive shaft with the flat surface facing up.

B2 Press the lip seal into the front housing, as shown.

NOTE: The top surface of the seal should be slightly below the top surface of the front housing.

B3 Install the gland plate (17) using the gland screws (16) and lockwashers (19).

NOTE: See **Appendix 1** for the torque specifications of the gland screws.

B4 Install the plugs (9) into the front housing.

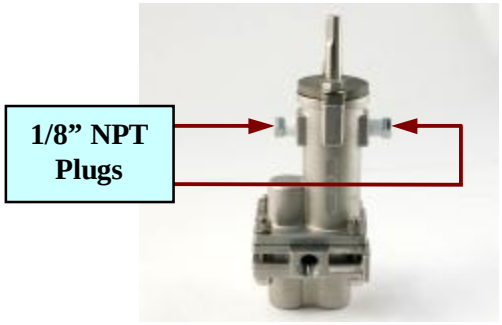

NOTE: Apply Teflon tape to the threads of the plugs to prevent leakage.

Precautions for Installation of Mechanical Seals (Applicable to Sections C, D & E)

1 If the drive shaft exhibits excessive wear, the shaft must be replaced.

2 Remove all burrs and setscrew marks from the drive shaft before installing the mechanical seal. This will prevent damaging the seal wedge during installation of the seal. Damage to the seal wedge can cause the seal to leak.

3 Do not scratch or handle the lapped face of the seal.

4 A new mechanical seal is supplied with retaining clips covered by tape. The clips compress the seal springs, eliminating spring pressure on the seal wedge. To ease installation and prevent damaging the wedge, do not remove the clips until after the seal is installed on the shaft. Once the clips are removed, the spring pressure will cause the wedge to seal against the shaft.

5 Do not reuse seal seat gaskets or O-rings.

C: Single Internal Mechanical Seal Installation (Refer to Sectional Drawing #3 – Page 51)

C1

CAUTION! Remove all burrs and setscrew marks from the drive shaft prior to installation of the mechanical seal. Do not remove the retaining clips from the seal until after the seal is installed on the shaft.

Slide the mechanical seal (11) on the drive shaft (20) with the seal face directed away from the housing, as shown.

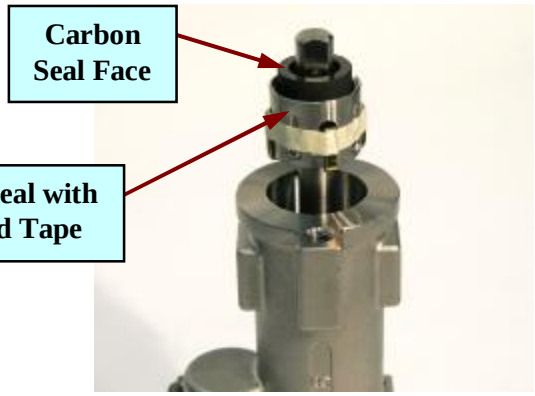

C2 Remove the tape and retaining clips; then orient the seal body as shown.

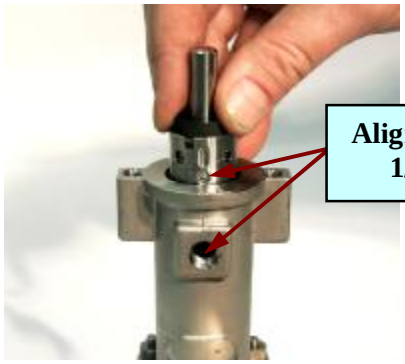

C3 Push the seal into the housing until the setscrew is visible thru the 1/8" NPT port.

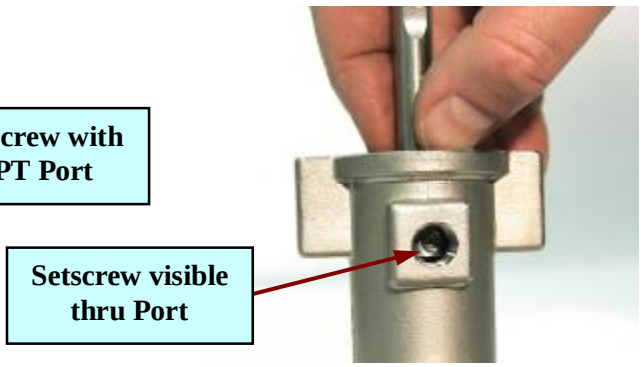

C4 Lightly tighten the setscrew on the body of the mechanical seal.

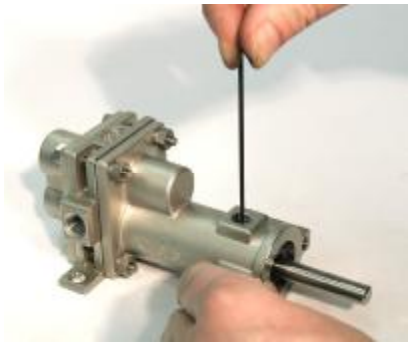

C5 Install one seal seat gasket (18) on the lapped side of the seal seat (24).

C6 Slide the seal seat (with gasket installed) on the drive shaft, as shown; then test the compression of the seal by pushing the seal seat face against the mechanical seal face. The proper compression gap is 1/16" (1.6 mm). If necessary, reposition the mechanical seal on the shaft to set the compression distance to the proper value.

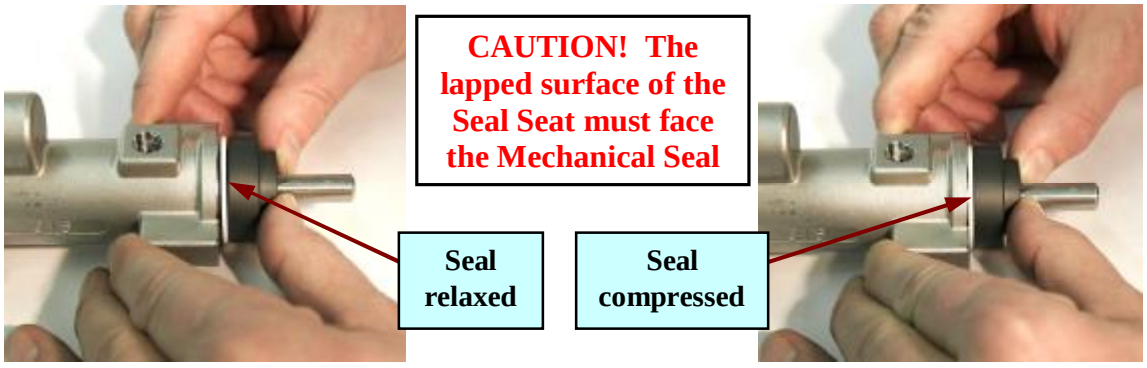

C7 Once the position of the mechanical seal is properly set, tighten **all** setscrews on the seal body.

NOTE: Rotate the shaft in steps to access each setscrew thru the 1/8" NPT port on the front housing.

C8 Install the other gasket (18) on the outside face of the seal seat (24).

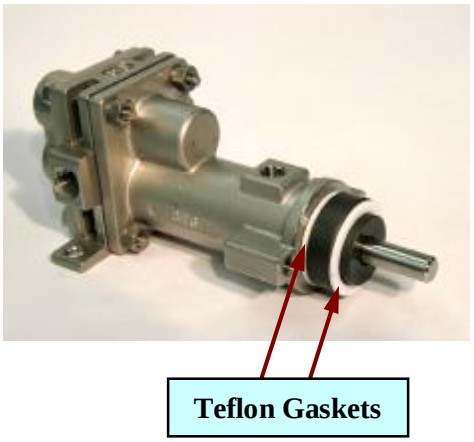

C9 Install the gland plate (17) using the gland screws (16) and lockwashers (19).

NOTE: See **Appendix 1** for the torque specifications of the gland screws.

C10 Install the two 1/8" NPT plugs (9).

NOTE: Apply Teflon tape to the threads of the plugs to prevent leakage.

D: External Mechanical Seal Installation (Refer to Sectional Drawing #4 – Page 52)

D1 Install the 1/8" NPT plugs (9) into the front housing (8).

D2 Install the seal seat gaskets (18) on the seal seat (24).

D3 Install the seal seat onto the front housing with the lapped surface facing up.

NOTE: Apply Tefon tape to the threads of the plugs to prevent leakage.

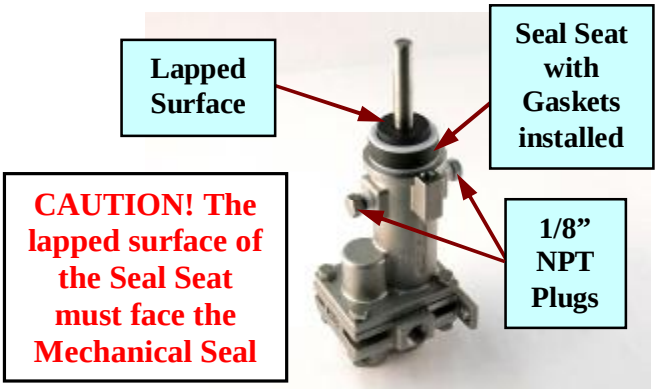

CAUTION! Remove all burrs and setscrew marks from the drive shaft prior to installation of the mechanical seal. Do not remove the retaining clips from the seal until after the seal is installed on the shaft.

D4 Install the gland plate (17) to the front housing (8) using the gland screws (16) and lockwashers (19).

NOTE: See **Appendix 1** for the torque specifications of the gland screws.

D5 Slide the mechanical seal (11) on the drive shaft (20).

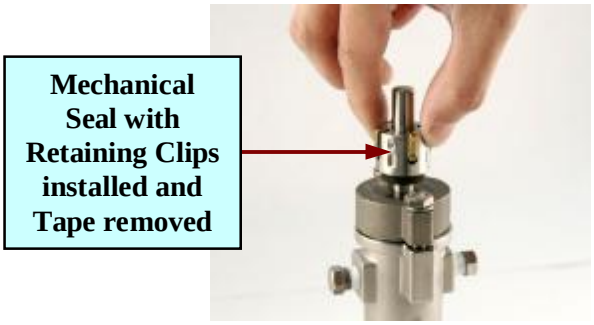

NOTE: The seal face of the mechanical seal must face towards the seal seat.

D6 Remove the retaining clips from the seal. Compress the mechanical seal face against the seal seat face by 1/16" (1.6 mm) and then tighten **all** setscrews on the body of the seal.

NOTE: Do not remove the compression force until all of the setscrews have been tightened.

Pump with External Mechanical Seal

E: Double Mechanical Seal Installation (Refer to Sectional Drawing #5 – Page 53)

E1 If not previously done, install the inboard seal seat (25) with O-ring (26) into the front housing. (See **Step 10** of the Pump Assembly procedure on Page 24.)

CAUTION! Remove all burrs and setscrew marks from the drive shaft prior to installation of the mechanical seal. Do not remove the retaining clips from the seal until after the seal is installed on the shaft.

E2 Slide the double mechanical seal (11) on the drive shaft (20).

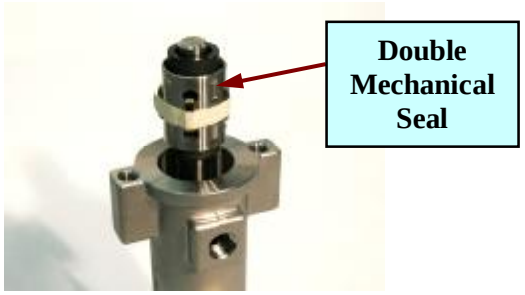

E3 Remove the tape and retaining clips from the mechanical seal.

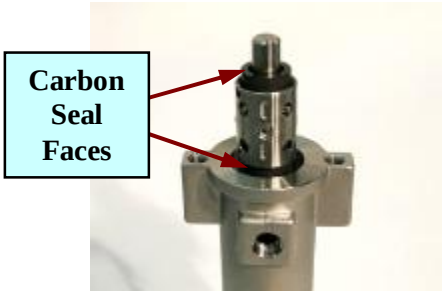

NOTE: Because the double mechanical seal is symmetrical, the seal faces can be oriented either way.

E4 Slide the mechanical seal into the front housing (8); then install the outboard seal seat (24) with gaskets (18).

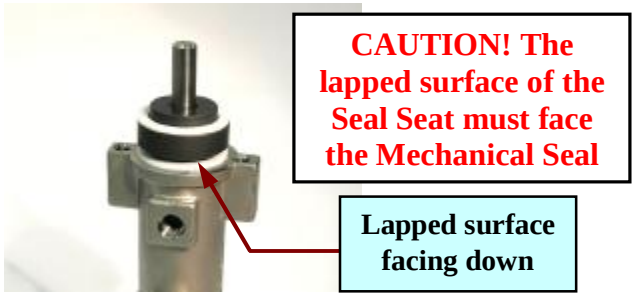

NOTE: The double mechanical seal will self-position once the gland plate is installed.

E5 Install the gland plate (17) using the gland hardware (16 & 19); then tighten **all** seal setscrews.

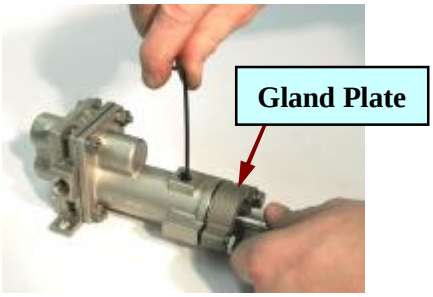

NOTE: See **Appendix 1** for the torque specifications of the gland screws.

NOTE: The 1/8" NPT ports must be connected to the *barrier fluid lubrication system* for supporting the double mechanical seal during pump operation (see **Appendix 4**).

CAUTION! Failure to properly support the double mechanical seal will result in premature seal wear and leakage.

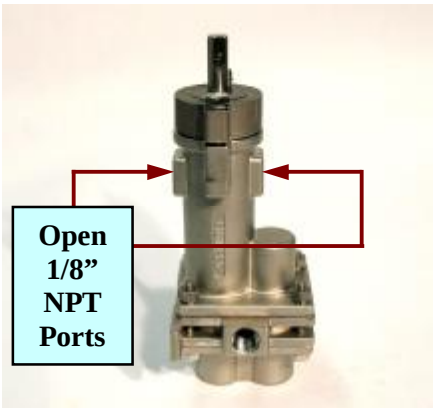

END OF ASSEMBLY PROCEDURE

5.5 CLOSE-COUPLED CONFIGURATION

Liquiflo sealed pumps are also available in a Close-Coupled (CC) configuration. These pumps offer several advantages over long-coupled sealed pumps. Close-coupled pumps are inherently self-aligning. This feature simplifies installation and eliminates the maintenance issues caused by misalignment of the pump and motor. In addition, the pump and motor are both supported by a sturdy Cast Iron pedestal and the pump is dimensionally interchangeable with Liquiflo mag-drive pumps (see **Appendix 6**, Page 57).

The Close-Coupled sealed pumps are compatible with several NEMA and IEC motor frames (see Table 5, Page 6) and are available with either packing or mechanical seals (single, double or external).

5.5.1 Disassembly Procedure – Close-Coupled Configuration with Single Mechanical Seal

NOTE: Refer to Exploded View Drawing #2 on Page 55.

---

1 Unbolt the front housing (8) from the pedestal (34).

2 Remove the pump module.

3 Remove the coupling flange (37) from the shaft (20).

---

4 Remove the gland plate (17).

5 Remove the seal seat (24) and gaskets (18).

6 Remove one 1/8” NPT plug (9).

NOTE: Remove any burrs or scratches from the end of the drive shaft prior to removing the mechanical seal.

7 Loosen **all** setscrews on body of seal (11).

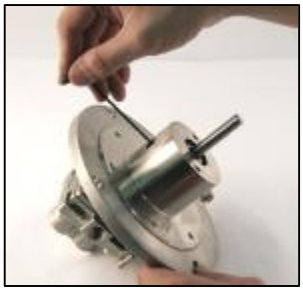

8 Slide out the mechanical seal.

9 Remove the seal from the drive shaft.

---

10 Remove the six seal housing bolts (29).

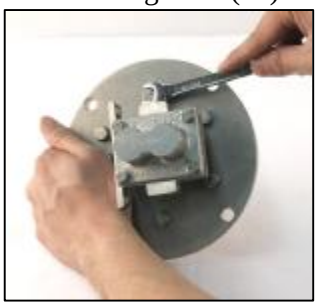

11 Remove the seal housing (28).

12 Remove the seal housing O-ring (27) and discard.

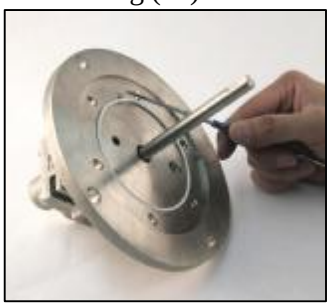

13 Remove the four housing bolts (4).

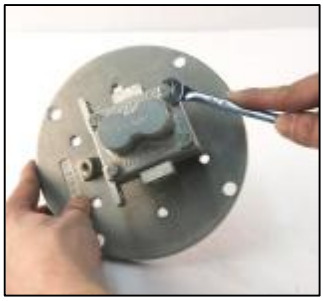

14 Remove the front housing (8).

15 Remove the center and rear housings (21 & 2).

16 Separate the wear plates (7), housing pins (12) and gear-shaft assemblies.

17 Remove the O-rings (5) from the center housing and discard.

NOTE: To separate the gears from the shafts or to remove the bearings and bearing lock pins from the front and rear housings, see Pages 19 & 20.

5.5.2 Assembly Procedure – Close-Coupled Configuration with Single Mechanical Seal

NOTE: Observe the Precautions for Installation of Mechanical Seals given on Page 27. Refer to Exploded View Drawing #2 on Page 55.

1 Perform **Steps 1** to **9** of **Section 5.4** to assemble the section of the pump that is shown at right.

Assembly of rear and center housings, O-rings, bearings, bearing lock pins, wear plates, housing alignment pins and gear-shaft assemblies

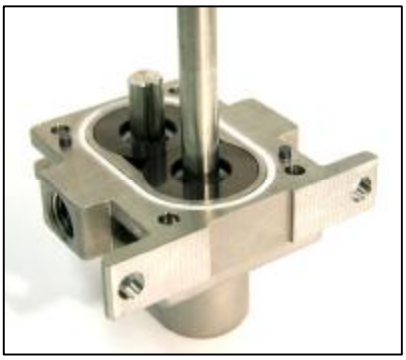

2 Install the front housing (8).

NOTE: Be certain the front housing seats properly over the housing pins.

3 Install the housing hardware (4, 10 and 15) and fasten.

NOTE: See Note in **Step 12**, Page 25.

4 Rotate the drive shaft (20).

NOTE: The gears should rotate freely inside the housing.

---

5 Install the seal housing O-ring (27).

CAUTION! Do not reuse O-rings.

6 Install one 1/8" NPT plug (9) into the seal housing (28).

NOTE: Apply Teflon tape to the threads of the plug to prevent leakage.

7 Install the seal housing (28) on the front housing (8).

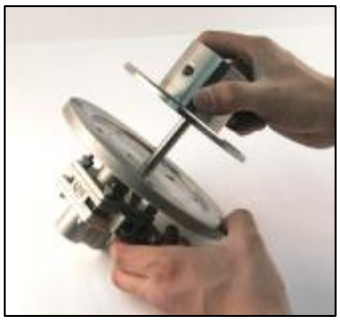

NOTE: The seal housing should mate freely with the front housing.

CAUTION! To prevent damaging the seal wedge, remove any burrs or scratches on the end of the drive shaft before installing the mechanical seal. Damage to the wedge can cause leakage.

8 Install the seal housing hardware (29 & 30).

9 Fasten the seal housing bolts (29).

NOTE: See Note in **Step 12**, Page 25.

10 Install the single mechanical seal (11).

NOTE: Do not remove the seal retaining clips until after the seal is installed on the drive shaft.

---

11 Remove the seal retaining clips and push the seal inside the seal housing.

NOTE: The setscrew on the seal body should be visible thru the 1/8" NPT port.

12 Lightly tighten the setscrew and then install the seal seat (24) with gaskets (18).

CAUTION! The lapped surface of the Seal Seat must face down.

13 Measure the compression gap of the seal. The gap should be 1/16" (1.6 mm).

NOTE: If necessary, loosen the setscrew and reposition the seal to the proper compression gap.

---

14 Tighten **all** setscrews on the body of the seal.

NOTE: Rotate the shaft in steps to access each setscrew thru the 1/8" NPT port.

15 Install the gland plate (17) using the gland screws (16) and lockwashers (19).

NOTE: Refer to **Appendix 1** for the torque specifications of the gland screws.

16 Install the other 1/8" NPT plug (9) into the seal housing (28).

NOTE: Apply Teflon tape to the threads of the plug to prevent leakage.

---

17 Install the drain plug (9) into the front housing (8).

NOTE: Apply Teflon tape to the threads of the plug to prevent leakage.

18 Install the coupling flange (37) so that the end of the flange is flush with the end of the drive shaft; then lightly tighten the setscrew on the **flat part of the shaft**.

NOTE: Only tighten one setscrew on the flat part of the shaft. If the coupling has a second setscrew, it should not be tightened. This will prevent damaging the round part of the shaft.

---

19 Remove the door (35) from the pedestal (34).

NOTE: The door is secured to the pedestal with two bolts on opposite sides.

20 Install the motor coupling flange and insert (37 & 38).

NOTE: Do not tighten the coupling setscrew at this time.

21 Install the pump module to the pedestal.

NOTE: Ensure that the pump coupling flange mates with the flexible insert.

---

22 Attach the front housing to the pedestal using the mounting hardware (31, 32 & 33).

23 Loosen the setscrew on the pump coupling flange and then adjust the position of both flanges so that the flexible insert is free to move axially – a distance of about 1/16 to 1/8 inches.

CAUTION! After the coupling setscrews are tightened, be certain the flexible coupling insert is free to move or axial loads will be applied to the pump during operation, causing premature pump failure.

NOTE: Refer to **Appendix 1** for the torque specifications of the fasteners.

---

24 Tighten the pump and motor coupling setscrews.

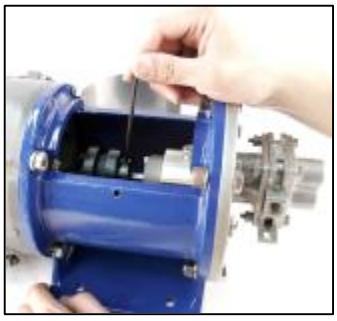

NOTE: Tighten only the setscrew on the **flat part of the pump shaft**.

25 Reattach the door to the pedestal using two bolts (36).

NOTE: Refer to **Appendix 1** for the torque specifications of the fasteners.

Sealed Pump with Single Internal Mechanical Seal, Close-Coupled to Motor

---

END OF ASSEMBLY PROCEDURE

NOTE: For the disassembly and assembly of Close-Coupled pumps having other types of seals, refer to Exploded View Drawing #2 on page 55.

Appendix 1: Fastener Torque Specifications

Maximum Torque Specifications for 18-8 Stainless Steel Bolts

Function	Pump Models	Bolt Size	Bolt Type	Qty. (per Pump)	Max Torque Specifications	
					(in-lbs)	(N-m)
Housing Assembly	H1F & H3F 31F & 33F	10-32 UNF x 1 ½	HHCS	4	31	3.5
	H5R & H5F 35R & 35F	10-32 UNF x 1.80	HHCS	4	31	3.5
	H7N & H7R 37R	1/4-20 UNC x 2 ¼	HHCS	4	75	8.5
	H7F 37F	1/4-20 UNC x 2 ½	HHCS	4	75	8.5
	H9R 39R	1/4-20 UNC x 3	HHCS	4	75	8.5
	H9F 39F & 311F	1/4-20 UNC x 3 ¾	HHCS	4	75	8.5
Gland Plate Assembly	H1F - H9F 31F - 39F & 311F	1/4-28 UNF x 1*	HHCS	2	94	10.6
ADDITIONAL BOLTS for SEALED PUMPS with CLOSE-COUPLED CONFIGURATION						
Seal Housing Assembly	H1F - H9F 31F - 39F & 311F	1/4-28 UNF x 5/8	HHCS	6	94	10.6
Pedestal Door Assembly	H1F - H9F 31F - 39F & 311F	10-32 UNF x 5/8	HHCS	2	31	3.5
Pump-Pedestal Assembly	H1F - H9F 31F - 39F & 311F	3/8-16 UNC x 1 ¼	HHCS	4	236	26.7
Motor[1]-Pedestal Assembly	H1F - H9F 31F - 39F & 311F	3/8-16 UNC x 1	HHCS	4	236	26.7
Motor[2]-Adapter Assembly	H1F - H9F 31F - 39F & 311F	1/2-13 UNC x 1	SHCS	4	517	58.4
Adapter[2]-Pedestal Assembly	H1F - H9F 31F - 39F & 311F	3/8-16 UNC x 1	HHCS	4	236	26.7

* Bolt length is 3/4" for pumps with a Packing Seal and 5/8" for pumps with a Lip Seal.

[1] NEMA 56C, 56HC, 143TC & 145TC motor frames
[2] NEMA 182TC & 184TC motor frames

HHCS = Hex Head Cap Screw
SHCS = Socket Head Cap Screw

Appendix 2: Retaining Ring Tool Specifications

The following tool is recommended for the efficient and safe installation or removal of the retaining rings used in the pump. It should be manufactured from a hard material, such as steel.

Tool Dimensional Specifications (inches)

Tool #	For Pump Models	ID	ID Tolerance
1	**H1F & H3F; 31F thru 35F**	.378	+/- .001
2	**H5R & H5F; 37R, 37F & 311F**	.503	+/- .001
3	**H7N thru H9F; 39R & 39F**	.628	+/- .001

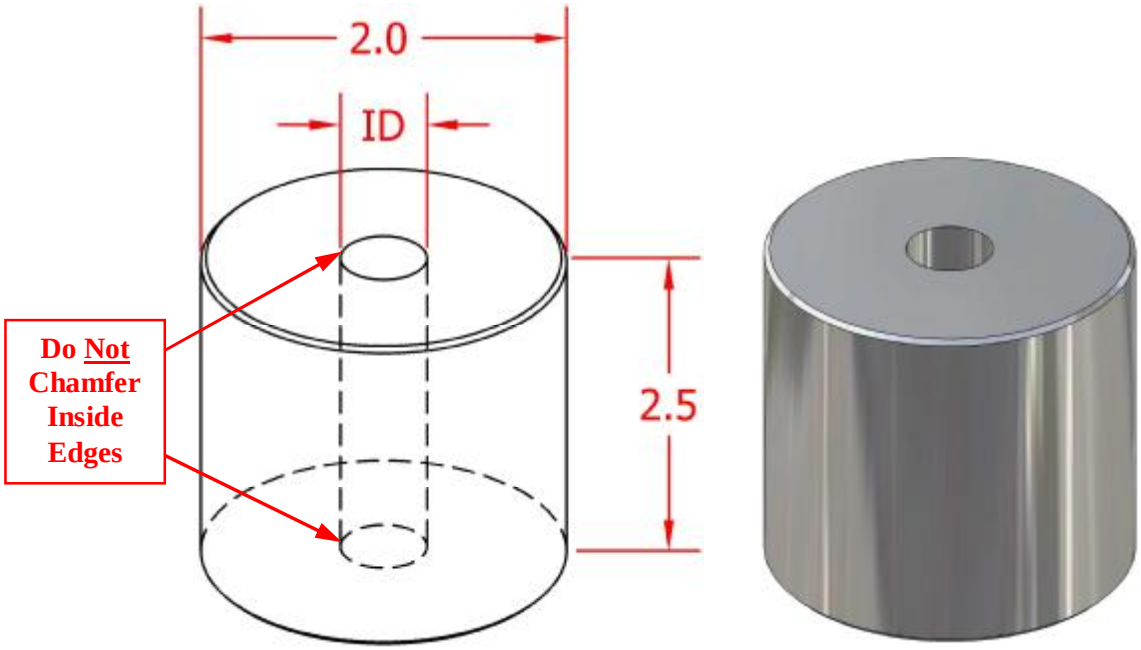

NOTE: The retaining ring tool is especially useful when assembling the gears on the drive and idler shafts (see **Appendix 5**).

Appendix 3: Wear Allowances

When a pump requires maintenance, a convenient way to restore the pump to like-new condition is to use a repair kit. The repair kit contains all *internal wear parts* as well as O-rings, retaining rings, bearing lock pins, housing alignment pins and keys.

In some cases, only certain parts may need to be replaced. The primary wear parts of the pump are the gears, shafts, wear plates and bearings. The center housing (secondary wear part) may also incur physical wear by contact with the gears caused by excessively worn bearings. (Note: the center housing is not included in a standard repair kit.) These wear parts can be reused if they are in acceptable condition. O-rings and retaining rings should not be reused. The following used parts should be inspected and evaluated for reuse based on the specifications given in the **Wear Allowances Chart** (see Page 41):

Gears: Spur gears should have a uniform tooth profile on both the leading and trailing edges. If the outer diameter of the gear is worn, pumping performance will degrade. Gears with minor wear should be evaluated for reuse by measuring the outer diameter and comparing it to the minimum diameter specification given in the Wear Allowances Chart. Gears with obvious major wear, such as flattened teeth or other significant wear on the profile, should be replaced (see photo below).

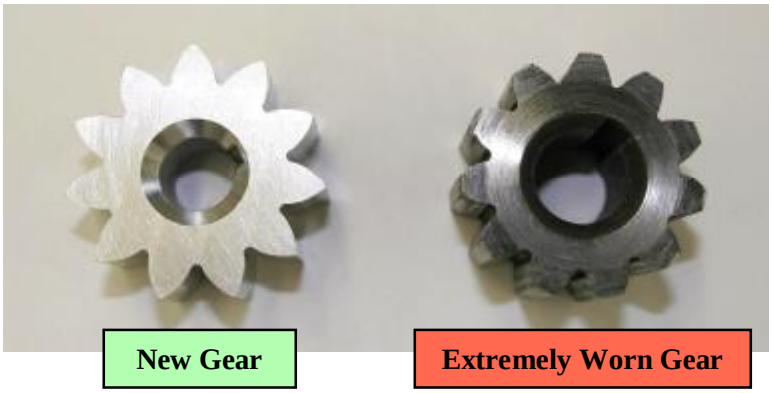

Shafts: The area of the shaft that is engaged in the bearings will wear over time depending on the service conditions and materials of construction (see photos below). Hard-coated shafts are available to minimize or eliminate wear of the shaft surfaces. Worn shafts may allow the gears to contact the center housing and accelerate both gear and center housing wear. The shaft bearing-engagement areas should be round and have minimum diameter as specified in the Wear Allowances Chart.

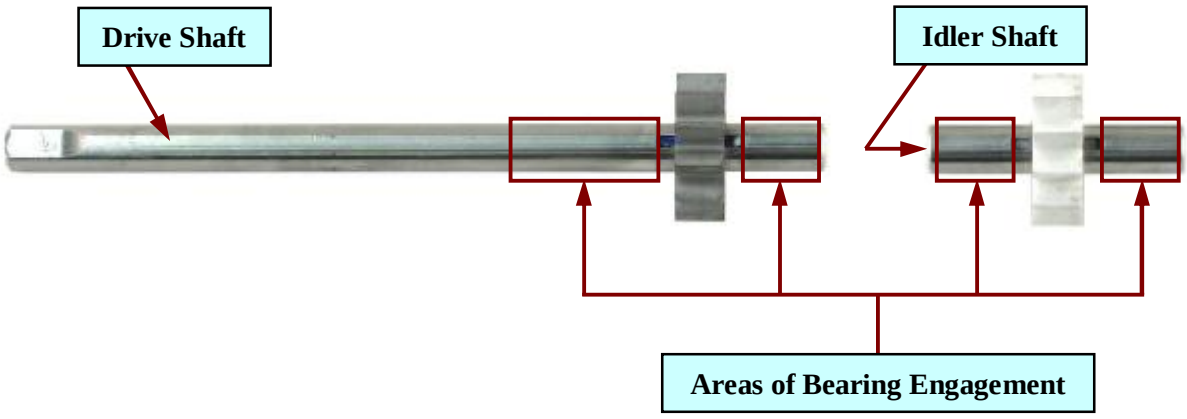

Appendix 3: Wear Allowances (Continued)

Wear Plates: This is a sacrificial part of the pump designed to protect the front and rear housings from wear by continual contact with the sides of the gears. Erosion of the wear plates increase clearances causing slip to increase. This results in a reduction in pump performance. Wear plates should have smooth surfaces and meet the minimum thickness requirements given in the Wear Allowances Chart. (Note: Most Liquiflo wear plates are manufactured with cut-outs or relief grooves to minimize hydraulically induced gear separation forces during pumping. These *relieved wear plates* increase pump life by reducing loads on bearings and shafts. A typical relieved wear plate is shown below.)

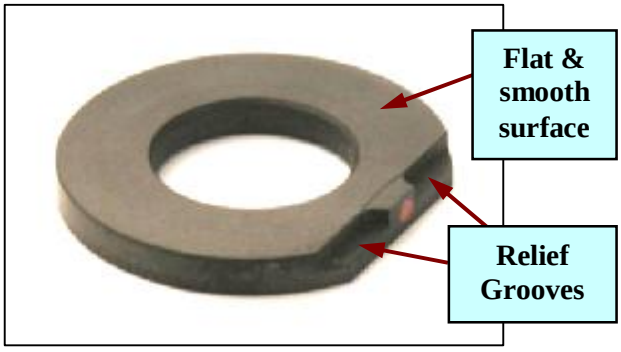

Typical Relieved Wear Plate

Measuring Wear Plate Thickness

Bearings: The H-Series and 3-Series pumps use sleeve-type bearings that are also known as *journal bearings*. These bearings are designed to support the shafts and precisely position the gears inside the housing. Worn bearings will eventually allow the rotating gears to contact the center housing, causing wear and eventual failure of both of these components. (See photo at below left for the typical wear pattern of the bearings.) If any wear of the bearings is observed, they should be replaced. The Wear Allowances Chart gives the maximum inner diameter that is acceptable for worn bearings.

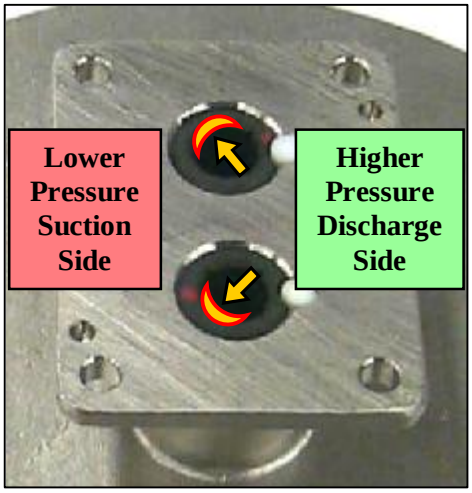

Typical Wear Pattern of Bearings

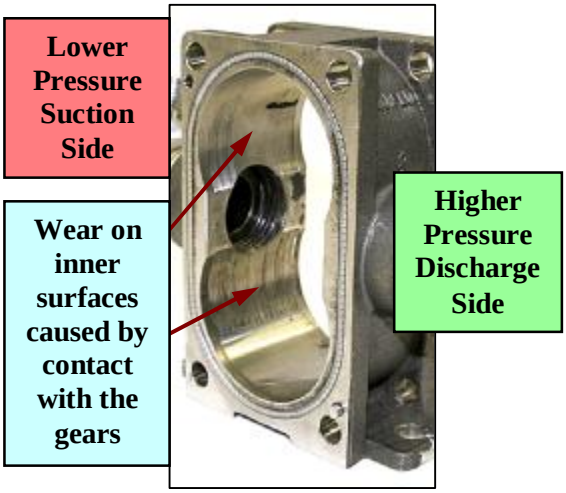

Typical Wear Pattern of Center Housing

Center Housing: The typical failure mode for the center housing is from contact with the rotating gears, caused by extreme wear of the bearings and shafts. Evidence of contact or slight wear on the inside surfaces can be expected. However, if deep grooves or excessive wear is observed, the center housing should be replaced. (See photo at above right for the typical wear pattern of the center housing.) Reusing a worn center housing will cause pump performance to be lower than expected because of increased slip.

Appendix 3: Wear Allowances (Continued)

Wear Allowances Chart (Units: inches)

Pump Series	Pump Model	Gears		Shafts		Wear Plates		Bearings	
		Nom. O.D.	Min O.D.	Nom. O.D.	Min O.D.	Nom. Thick.	Min Thick.	Nom. I.D.	Max I.D.
H-Series	H1F	1.163	1.158	0.375	0.373	0.250	0.247	0.375	0.378
	H3F	1.163	1.158	0.375	0.373	0.125	0.122	0.375	0.378
	H5R	1.163	1.158	0.500	0.498	0.250	0.247	0.500	0.503
	H5F	1.163	1.158	0.500	0.498	0.125	0.122	0.500	0.503
	H7N	1.711	1.705	0.625	0.623	0.312	0.309	0.625	0.628
	H7R	1.711	1.705	0.625	0.623	0.125	0.122	0.625	0.628
	H7F	1.711	1.705	0.625	0.623	0.125	0.122	0.625	0.628
	H9R	1.711	1.705	0.625	0.623	0.125	0.122	0.625	0.628
	H9F	1.711	1.705	0.625	0.623	0.125	0.122	0.625	0.628
3-Series	31F	1.163	1.158	0.375	0.373	0.250	0.247	0.375	0.378
	33F	1.163	1.158	0.375	0.373	0.125	0.122	0.375	0.378
	35R	1.163	1.158	0.375	0.373	0.250	0.247	0.375	0.378
	35F	1.163	1.158	0.375	0.373	0.125	0.122	0.375	0.378
	37R	1.711	1.705	0.500	0.498	0.125	0.122	0.500	0.503
	37F	1.711	1.705	0.500	0.498	0.125	0.122	0.500	0.503
	39R	1.711	1.705	0.625	0.623	0.125	0.122	0.625	0.628
	39F	1.711	1.705	0.625	0.623	0.125	0.122	0.625	0.628
	311F	1.711	1.705	0.500	0.498	0.125	0.122	0.500	0.503

O.D. = Outer Diameter **I.D.** = Inner Diameter

NOTES:

1 Pump models that are not highlighted in the above table have gears with an even number of teeth. The diameter for these gears is measured from the tip of one tooth to the tip of the opposite tooth (see **Photo 1**). This measurement method gives the true diameter of the gears.

2 Pump models that are highlighted in the above table have gears with an odd number of teeth. Because no two teeth have tips that coincide with the actual gear diameter, this makes the true gear diameter difficult to measure. A practical field method for determining gear wear is to measure the "three-point diameter" of the gear. That is, place one jaw of the caliper on the tip of one tooth and the other jaw on the tips of both opposite teeth and record the distance (see **Photo 2**). The highlighted diameter values are based on this measurement method and are less than the true gear diameters. (For the true nominal gear diameters, see the chart on Page 46.)

3 All diameter values listed in the above table are based on standard (untrimmed) parts. Parts requiring viscosity or temperature trims will have dimensions based on the application. Consult factory.

Photo 1

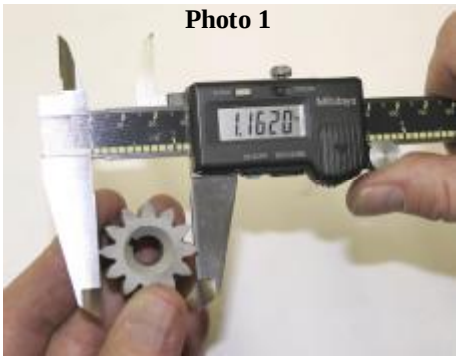

Photo 2

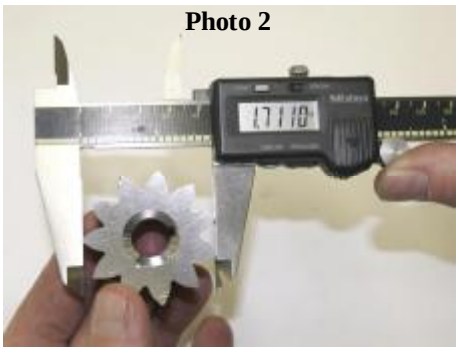

Appendix 4: Operation of Dynamic Seals

Liquiflo sealed pumps can be configured with any one of five distinct types of dynamic seals. The choice of seal will depend mainly on the pumping application. To maximize the lifetime of the seal and to ensure that it operates properly, it must be correctly installed and applied, and in some cases, properly adjusted or supported. This section covers the basic operation of the various seal arrangements used in Liquiflo pumps. (Refer to the Sectional Drawings in **Appendix 6**.)

A. Packing Seal

Although Packing is still used, it is not very common in the chemical processing industry because of its normal leak rate with low to moderate viscosity fluids. It is still considered to be an acceptable solution when pumping safe liquids or where the seal drainage can be captured. Flocculants, water and caustics are common examples of fluids which use this type of seal. Teflon is the standard packing material. Graphoil packing is used for high temperature applications over 350 °F up to 500 °F.

During operation, the shaft-packing interface must be lubricated to reduce frictional forces on the rotating drive shaft. Depending on the fluid, this can be accomplished in several ways: With low to moderate viscosity liquids, the gland screws are adjusted to provide a leak rate of about 8 to 10 drops per minute. With high viscosity liquids, grease can be administered into the seal chamber via the grease fitting. For crystallizing liquids, a flush fluid can be made to flow across the seal chamber, via the two 1/8" NPT ports. In all cases, the packing should be properly compressed by adjusting the glands screws. Under-compression will result in excessive leakage, and over-compression can cause excessive loading and heating of the drive shaft, which will lead to premature failure of the packing seal.

B. Lip Seal

The Lip Seal is the simplest dynamic seal but it is not very common because of its limitations. A U-cup shaped elastomer is used to seal the space between the rotating shaft and the stationary front housing. The hydraulic pressure inside the seal chamber forces the lips of the U-cup open which seals against the shaft and housing. Because the seal is an elastic material, it has significant physical, chemical and thermal limitations. However, it is a simple solution for pumping safe liquids under moderate conditions.

C. Single Internal Mechanical Seal

The Single Mechanical Seal arrangement is the dynamic seal standard and is by far the most commonly used when pumping any type of chemical where leakage needs to be minimized. Although widely used, this seal has some important limitations. The seal can tolerate only limited amounts of abrasive particles and because it is non-hermetic, it is not ideal for pumping fluids that can crystallize on contact with air. Crystals can build up around the edges of the seal and cause premature seal failure. Because of lubrication requirements, the maximum recommended fluid viscosity is 5,000 cP.

During operation, the rotating seal face seals against a stationary seal seat. To be effective, the working surfaces of the seal faces must be extremely flat and the pumped fluid must be present to lubricate the interface and remove the heat caused by friction. The sealing and frictional forces are a result of the mechanical spring pressure inside the seal body and the hydraulic pressure inside the seal chamber. If the pump is run dry for more than a few seconds, the frictional forces will cause rapid wear and damage the seal. Pumping very high viscosity fluids can also cause premature seal wear because of poor lubrication.

The most common seal combination is Carbon (seal face) vs. Ceramic or SiC (seal seat). If the seal is properly applied, it can be used to pump many chemicals up to differential pressures of 150 PSI or higher. Teflon can be used for the seal face material due to its superior chemical resistance, but it has a pressure limitation of 50 PSI. When pumping fluids containing very low levels of abrasives, SiC vs. SiC seal com-

Appendix 4: Operation of Dynamic Seals (Continued)

binations can be used. For higher levels of abrasives, a double mechanical seal can be used (see below). (Note: When pumping abrasive fluids, it is beneficial to use a larger pump running at lower speeds. This will significantly lower the wear rate and increase the working life of the pump. Gear pumps, in general, have limitations on pumping fluids containing suspended solid particles. See **Section 3.3**, Page 11.)

D. External Mechanical Seal

The External Mechanical Seal is similar to the Single Internal Mechanical Seal except that the seal is located on the outside of the pump housing. This arrangement has the following advantages: Because the seal is isolated from the seal chamber, the metallic seal body does not have to be chemically compatible with the pumped liquid and replacement of the mechanical seal is simplified because the pump does not always have to be disassembled. Another important advantage of the external seal is that it can be applied when system pressures are below atmospheric (< 0 PSIG or vacuum). This is because the atmospheric pressure will assist the mechanical spring pressure inside the seal body in holding the seal faces together. The main disadvantage of the external seal is that the hydraulic pressure inside the seal chamber is working against the seal faces. This makes the external seal less effective than the single internal seal when operating above atmospheric pressure. In addition, the external seal also has the same limitations as the single internal seal when pumping viscous, abrasive or crystallizing fluids.

E. Double Mechanical Seal

The Double Mechanical Seal is a more complex sealing arrangement, but when properly supported, it overcomes the limitations of the other seal types discussed above. As shown below, the double mechanical seal requires a *barrier fluid lubrication system* to cool and flush the seal faces. The barrier fluid must be safe and compatible with the pumpage, have a net flow across the seal chamber via the 1/8" NPT ports and must be pressurized to at least 15 PSI above the pump discharge pressure. The double mechanical seal is preferred for pumping abrasive, crystallizing or extremely hazardous fluids because the seal faces are only exposed to the flush fluid and the pumpage is completely contained by the inboard seal. The double seal can also pump viscous fluids greater than 5,000 cP and can even run dry as long as the barrier fluid is present. Failure to support the double seal will cause rapid wear and ensuing failure of both the inboard and outboard seals. The main disadvantage of the double seal is the added complexity and cost of the barrier fluid lubrication system. An alternative to the pump with a properly supported double mechanical seal is the sealless (magnetic-drive) pump. In addition to its simpler containment system, the mag-drive pump can prove to be a more reliable and cost-effective solution over time.

Barrier Fluid Lubrication System for Pump with Double Mechanical Seal

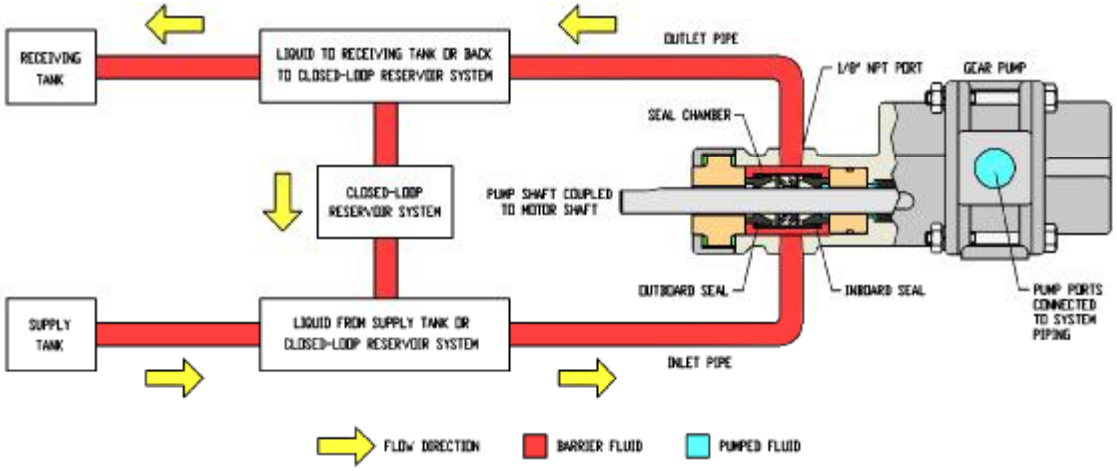

Appendix 5: Gear-Shaft Assembly

Parts List for Gear-Shaft Assemblies

Drive Gear-Shaft Parts		Idler Gear-Shaft Parts	
Part	**Quantity**	**Part**	**Quantity**
Drive Gear	1	Idler Gear	1
Drive Shaft	1	Idler Shaft	1
Key	1	Key	1
Retaining Ring	2	Retaining Ring	2

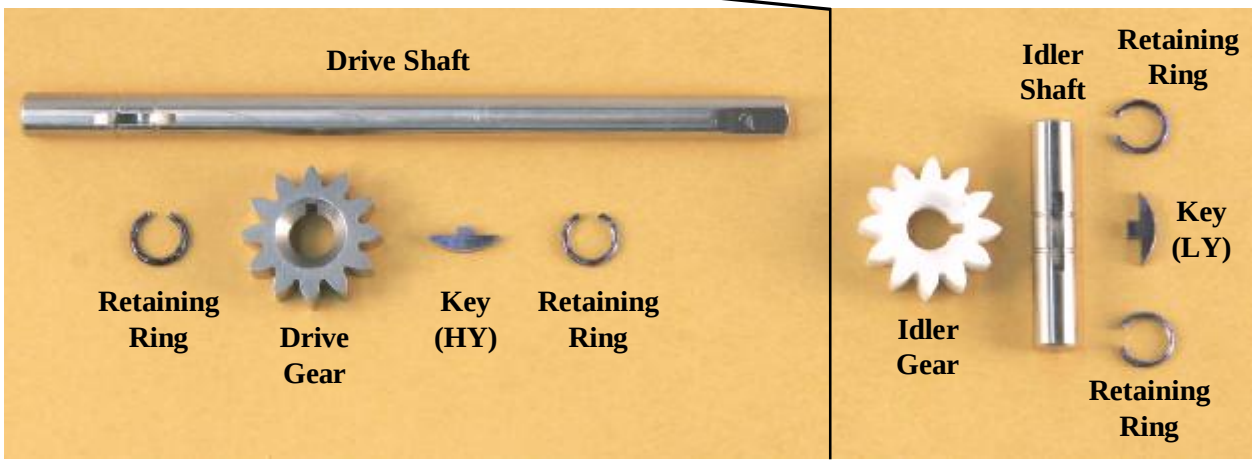

Description of Parts:

Shafts: As shown above, the pump contains two kinds of shafts: the *drive shaft* and the *idler shaft*. Both shafts have retaining ring grooves and a keyway for positioning the gears. The drive shaft also has a flat surface on one end for installing the mechanical coupling. The gears are positioned on the shafts using two retaining rings per gear. Depending on the pump model, some shafts may contain an inner and outer set of grooves to fit both full (F) and reduced (R) size gears. (See diagram below.)

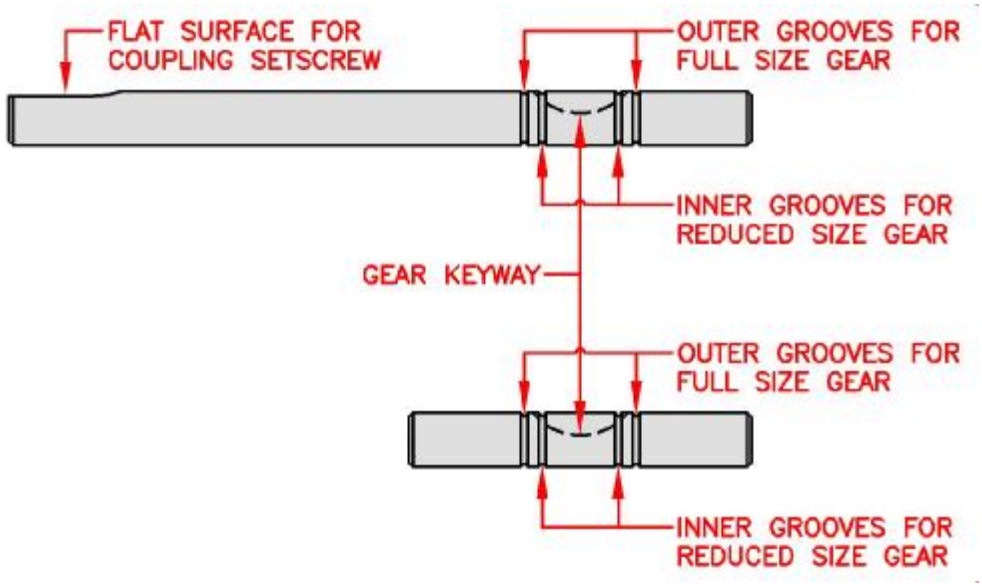

Appendix 5: Gear-Shaft Assembly (Continued)

To identify the pump shafts, refer to the following chart:

Shaft Identification Chart

Pump Series	For Pump Models	Shaft Diameter	Drive Shaft Length [1]	Drive Shaft Length [2]	Idler Shaft Length	# of Gear Retaining Ring Grooves
	UNITS:	in	in	in	in	—
H-Series	H1F & H3F	3/8	6.39	—	1.91	2
	H5R & H5F	1/2	6.87	—	2.40	4
	H7N	5/8	7.88	—	3.81	2
	H7R & H7F	5/8	7.88	—	3.81	4
	H9R	5/8	9.25	—	4.31	2
	H9F	5/8	10.00	—	5.06	2
3-Series	31F & 33F	3/8	6.39	7.11	1.91	2
	35R & 35F	3/8	6.87	8.00	2.40	4
	37R & 37F	1/2	7.88	10.00	3.81	4
	39R	5/8	9.25	—	4.31	2
	39F	5/8	10.00	—	5.06	2
	311F	1/2	10.00	—	5.06	2

1 - For all seal types except External Seal **2** - For External Seal only

Keys: Three types of gear keys are used in the pumps: High-yield (HY), low-yield (LY) and rectangular. For Models H1F, H3F, 31F thru 37F, and 311F, high-yield keys are used for all gear materials except Teflon; low-yield keys are used only for Teflon gears. (Note: High-yield keys have a lower height than low-yield keys.) For Models H5R thru H9F, 39R and 39F, rectangular keys are used for all gears. To identify the keys, use the following chart:

Key Identification Chart **Note:** Key profiles are shown in actual size.

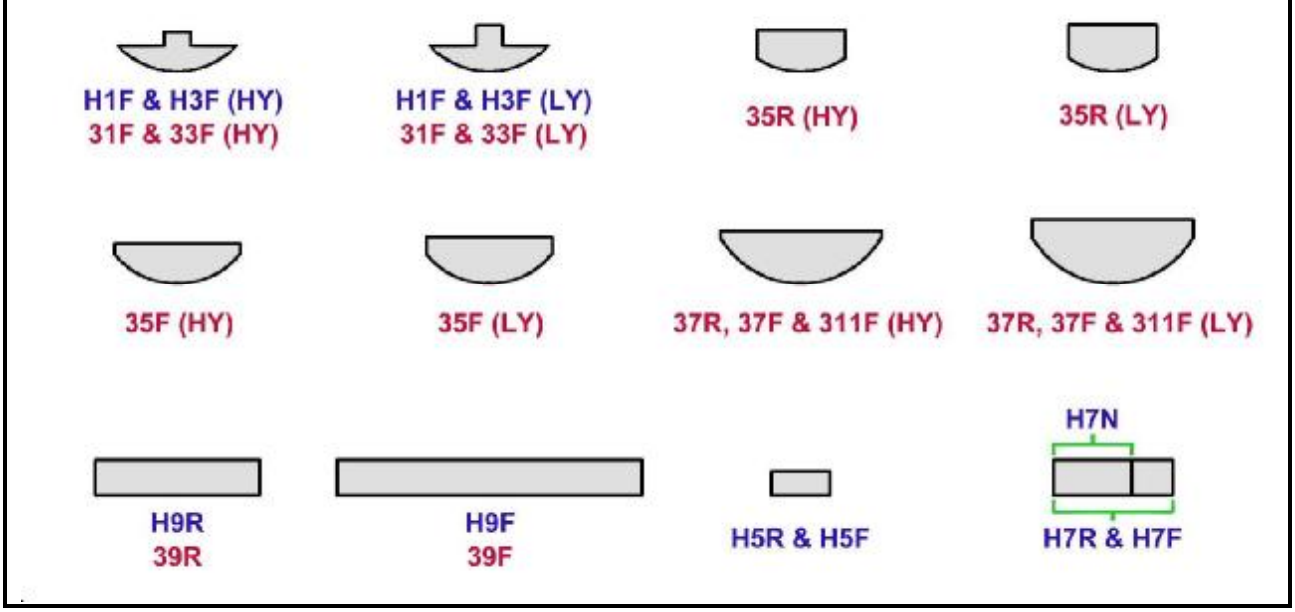

Appendix 5: Gear-Shaft Assembly (Continued)

Gears: The H-Series and 3-Series pumps use spur style gears, as shown below:

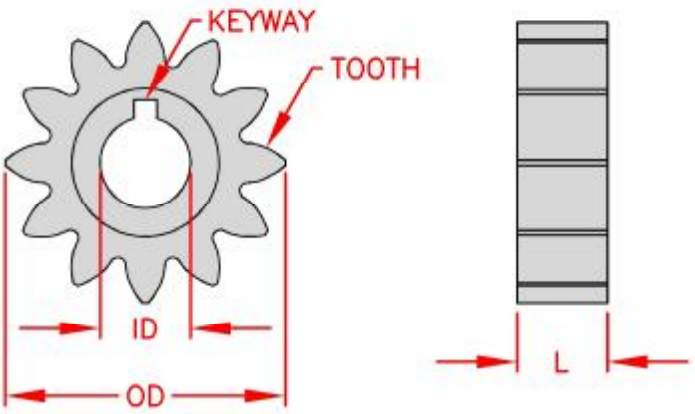

To identify the gears, use the following chart:

Gear Identification Chart

Pump Series	Pump Model	Gear Outer Diameter (OD)	Gear Inner Diameter (ID)	Gear Length (L)	# of Teeth
	UNITS:	in	in	in	—
H-Series	H1F	1.163	3/8	1/8 (3/8 Hub)	12
	H3F	1.163	3/8	3/8	12
	H5R	1.163	1/2	5/8	12
	H5F	1.163	1/2	7/8	12
	H7N	1.750	5/8	5/8	11
	H7R	1.750	5/8	1	11
	H7F	1.750	5/8	1 ¼	11
	H9R	1.750	5/8	1 ¾	11
	H9F	1.750	5/8	2 ½	11
3-Series	31F	1.163	3/8	1/8 (3/8 Hub)	12
	33F	1.163	3/8	3/8	12
	35R	1.163	3/8	5/8	12
	35F	1.163	3/8	7/8	12
	37R	1.750	1/2	1	11
	37F	1.750	1/2	1 ¼	11
	39R	1.750	5/8	1 ¾	11
	39F	1.750	5/8	2 ½	11
	311F	1.750	1/2	2 ½	11

Retaining Rings: The retaining rings are used to position the gears on the shafts. They should always be replaced when repairing the pump.

Appendix 5: Gear-Shaft Assembly (Continued)

Assembly Procedure:

CAUTION! Be careful not to damage the shafts.

1 Place one retaining ring (14) on a firm rubber mat and then place the shaft over the retaining ring, as shown.

NOTE: The pump shaft shown is the drive shaft for a H3F pump. This shaft has a 3/8" diameter and two gear retaining ring grooves (see Shaft Identification Chart on Page 45).

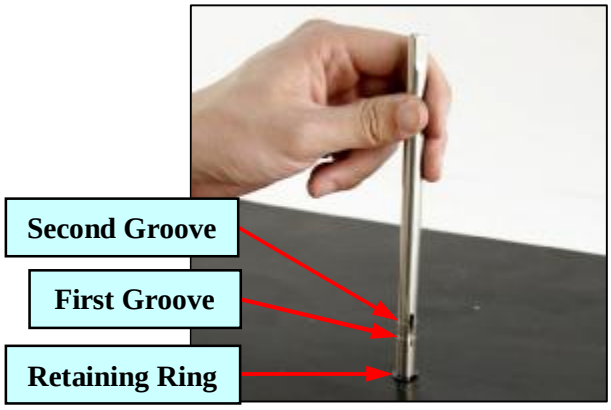

---

2 Strike the top end of the shaft with a rubber mallet to force the retaining ring onto the bottom end of the shaft, as shown.

---

3 Using the retaining ring tool, tap the shaft to slide the retaining ring into the <u>first</u> groove.

NOTE: See **Appendix 2** for specifications on producing the retaining ring tool.

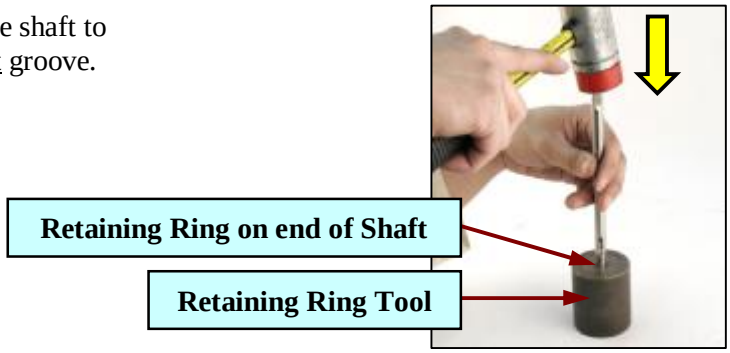

---

4 Strike the end of the shaft to dislodge the retaining ring from the first groove; then slide the retaining ring into the <u>second</u> groove by tapping the shaft.

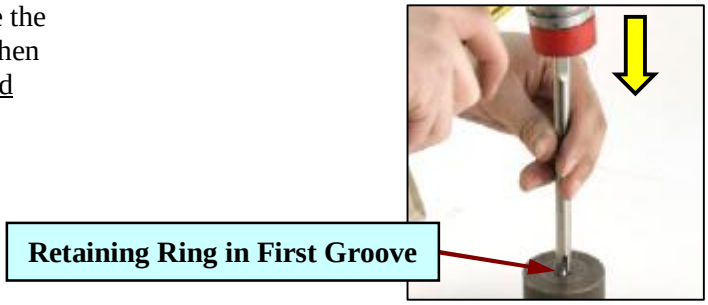

Appendix 5: Gear-Shaft Assembly (Continued)

5 Install the key (23A) and gear (22) on the shaft.

NOTE: The gear shown is a H3F metallic drive gear. This gear requires a HY-type key (see the section on Keys on Page 45). Align the keyway of the gear with the key on the shaft; then slide the gear over the key until the gear contacts the retaining ring.

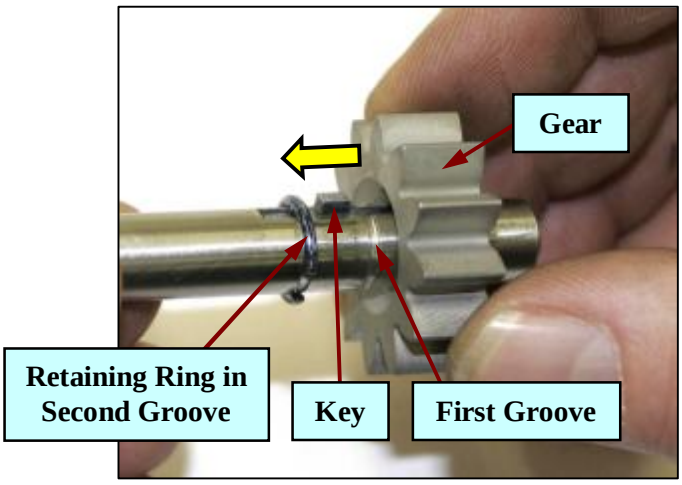

---

6 While holding the gear in place, force the other retaining ring (14) onto the end of the shaft by striking the shaft with the rubber mallet, as shown.

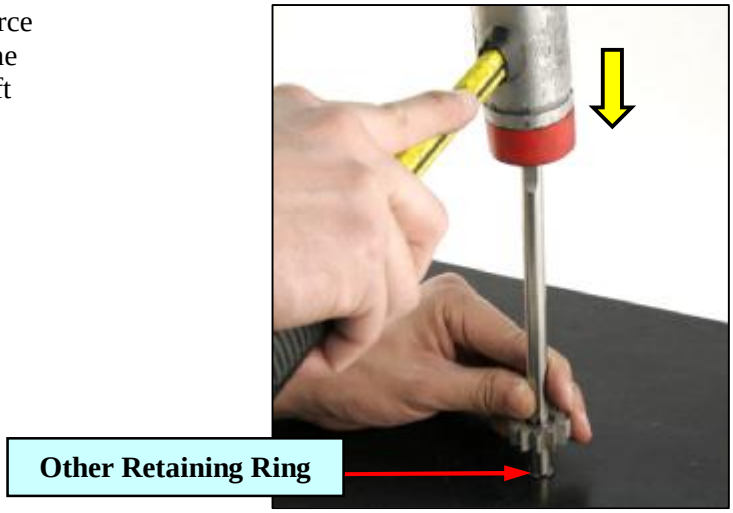

---

7 Slide the retaining ring into the first groove. This will lock the gear on the shaft.

NOTE: As a check, pull the gear by hand along the axis of the shaft to make sure it is securely locked into position.

Drive Gear-Shaft Assembly

Idler Gear-Shaft Assembly

END OF PROCEDURE

Appendix 6: Reference Drawings

Sectional Drawing #1 - Pump with PACKING SEAL

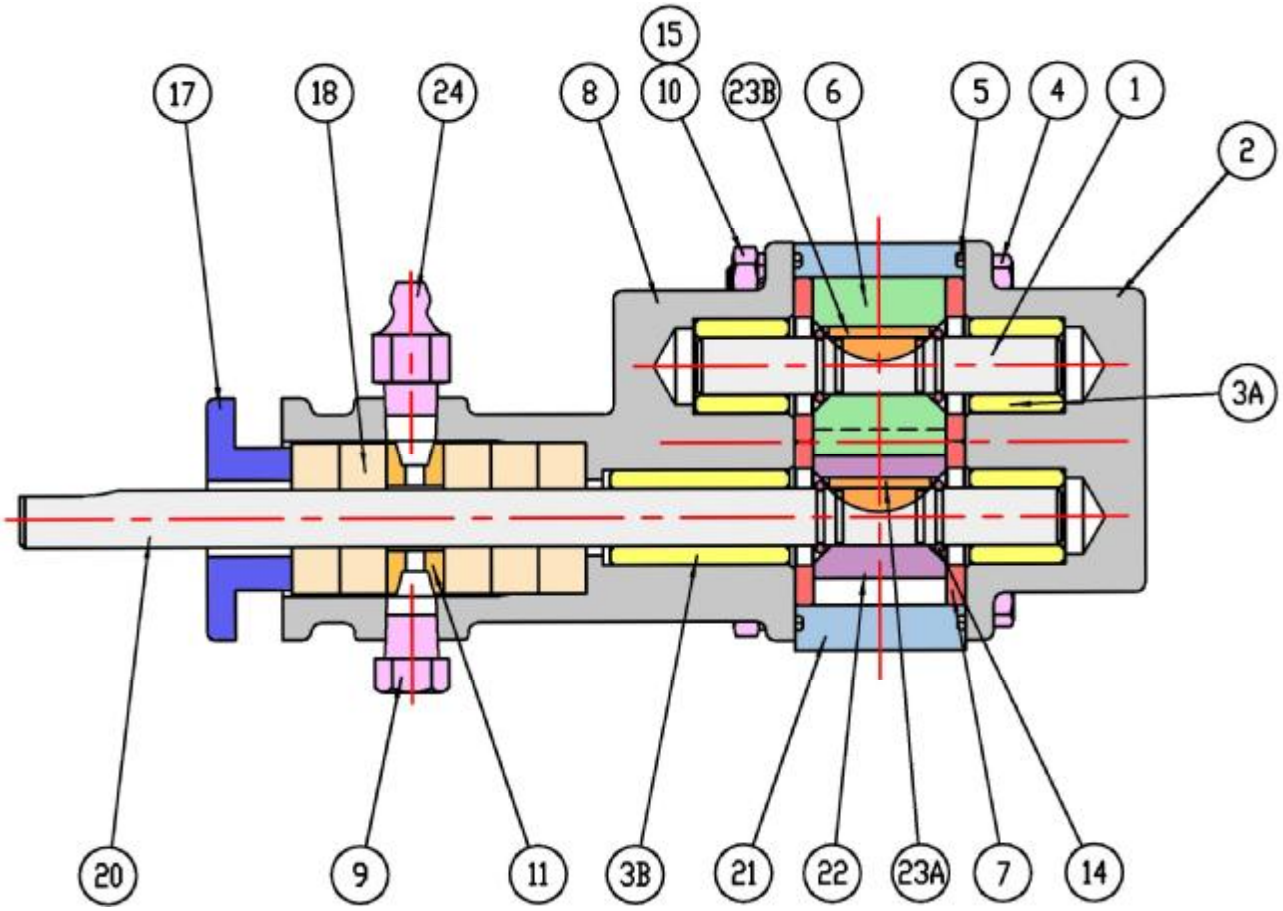

Item #	Description	Qty.	Item #	Description	Qty.
1	Idler Shaft	1	13	Pin, Bearing Lock (Not Shown)	4
2	Rear Housing	1	14	Retaining Ring, Gear	4
3A	Bearing, Short *	3	15	Lockwasher, Housing **	4
3B	Bearing, Long *	1	16	Screw, Gland (1/4-28 x 3/4 HHCS) (Not Shown)	2
4	Bolt, Housing (HHCS) **	4	17	Gland Plate	1
5	O-ring, Housing	2	18	Packing Ring	5
6	Idler Gear	1	19	N/A	–
7	Wear Plate	4	20	Drive Shaft	1
8	Front Housing	1	21	Center Housing	1
9	Plug, 1/8 NPT	1	22	Drive Gear	1
10	Nut, Housing **	4	23A	Key, Drive Gear	1
11	Lantern Ring	1	23B	Key, Idler Gear	1
12	Pin, Housing Alignment (Not Shown)	4	24	Grease Fitting	1

* Pump Models H7-H9, 37-39 & 311 each have four bearings of equal size. ** See Page 37 for bolt size.

Appendix 6: Reference Drawings (Continued)

Sectional Drawing #2 - Pump with LIP SEAL

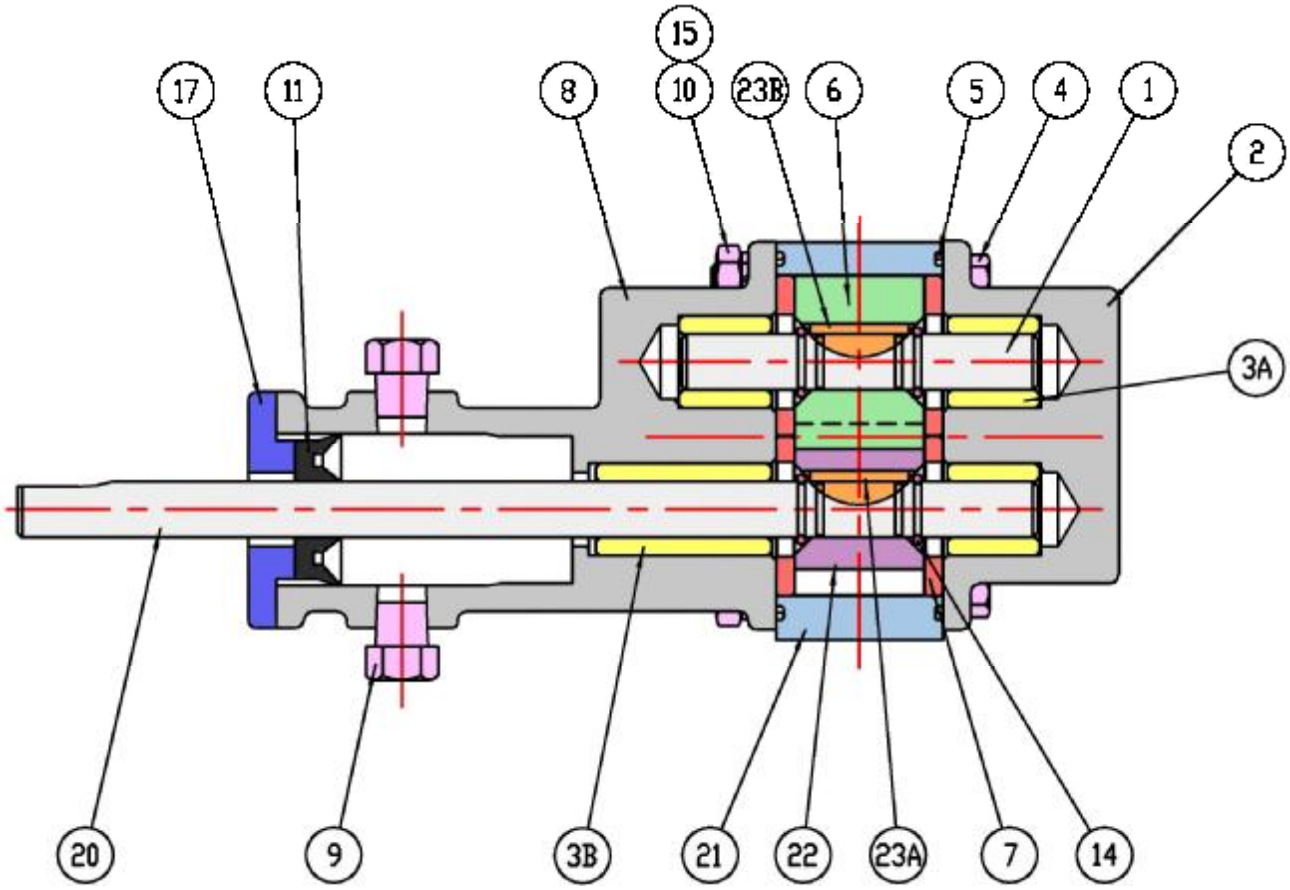

Item #	Description	Qty.	Item #	Description	Qty.
1	Idler Shaft	1	13	Pin, Bearing Lock (Not Shown)	4
2	Rear Housing	1	14	Retaining Ring, Gear	4
3A	Bearing, Short *	3	15	Lockwasher, Housing **	4
3B	Bearing, Long *	1	16	Screw, Gland (1/4-28 x 5/8 HHCS) (Not Shown)	2
4	Bolt, Housing (HHCS) **	4	17	Gland Plate	1
5	O-ring, Housing	2	18	N/A	–
6	Idler Gear	1	19	Lockwasher, Gland (1/4) (Not Shown)	2
7	Wear Plate	4	20	Drive Shaft	1
8	Front Housing	1	21	Center Housing	1
9	Plug, 1/8 NPT	2	22	Drive Gear	1
10	Nut, Housing **	4	23A	Key, Drive Gear	1
11	U-Cup Lip Seal	1	23B	Key, Idler Gear	1
12	Pin, Housing Alignment (Not Shown)	4	24	N/A	–

* Pump Models H7-H9, 37-39 & 311 each have four bearings of equal size. ** See Page 37 for bolt size.

Appendix 6: Reference Drawings (Continued)

Sectional Drawing #3 - Pump with SINGLE INTERNAL MECHANICAL SEAL

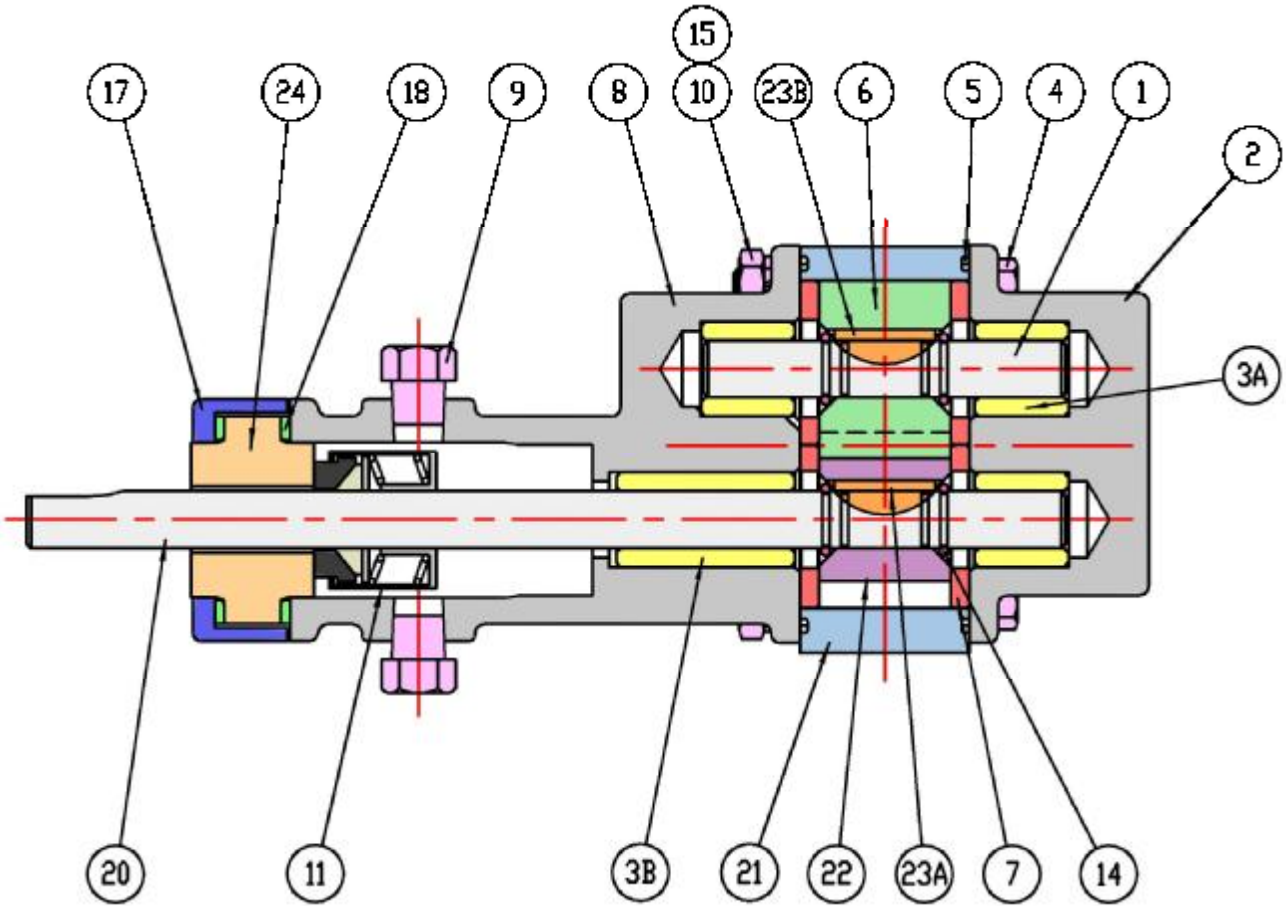

Item #	Description	Qty.	Item #	Description	Qty.
1	Idler Shaft	1	13	Pin, Bearing Lock (Not Shown)	4
2	Rear Housing	1	14	Retaining Ring, Gear	4
3A	Bearing, Short *	3	15	Lockwasher, Housing **	4
3B	Bearing, Long *	1	16	Screw, Gland (1/4-28 x 1 HHCS) (Not Shown)	2
4	Bolt, Housing (HHCS) **	4	17	Gland Plate	1
5	O-ring, Housing	2	18	Gasket, Seal Seat	2
6	Idler Gear	1	19	Lockwasher, Gland (1/4) (Not Shown)	2
7	Wear Plate	4	20	Drive Shaft	1
8	Front Housing	1	21	Center Housing	1
9	Plug, 1/8 NPT	2	22	Drive Gear	1
10	Nut, Housing **	4	23A	Key, Drive Gear	1
11	Mechanical Seal	1	23B	Key, Idler Gear	1
12	Pin, Housing Alignment (Not Shown)	4	24	Seal Seat	1

* Pump Models H7-H9, 37-39 & 311 each have four bearings of equal size. ** See Page 37 for bolt size.

Appendix 6: Reference Drawings (Continued)

Sectional Drawing #4 - Pump with EXTERNAL MECHANICAL SEAL

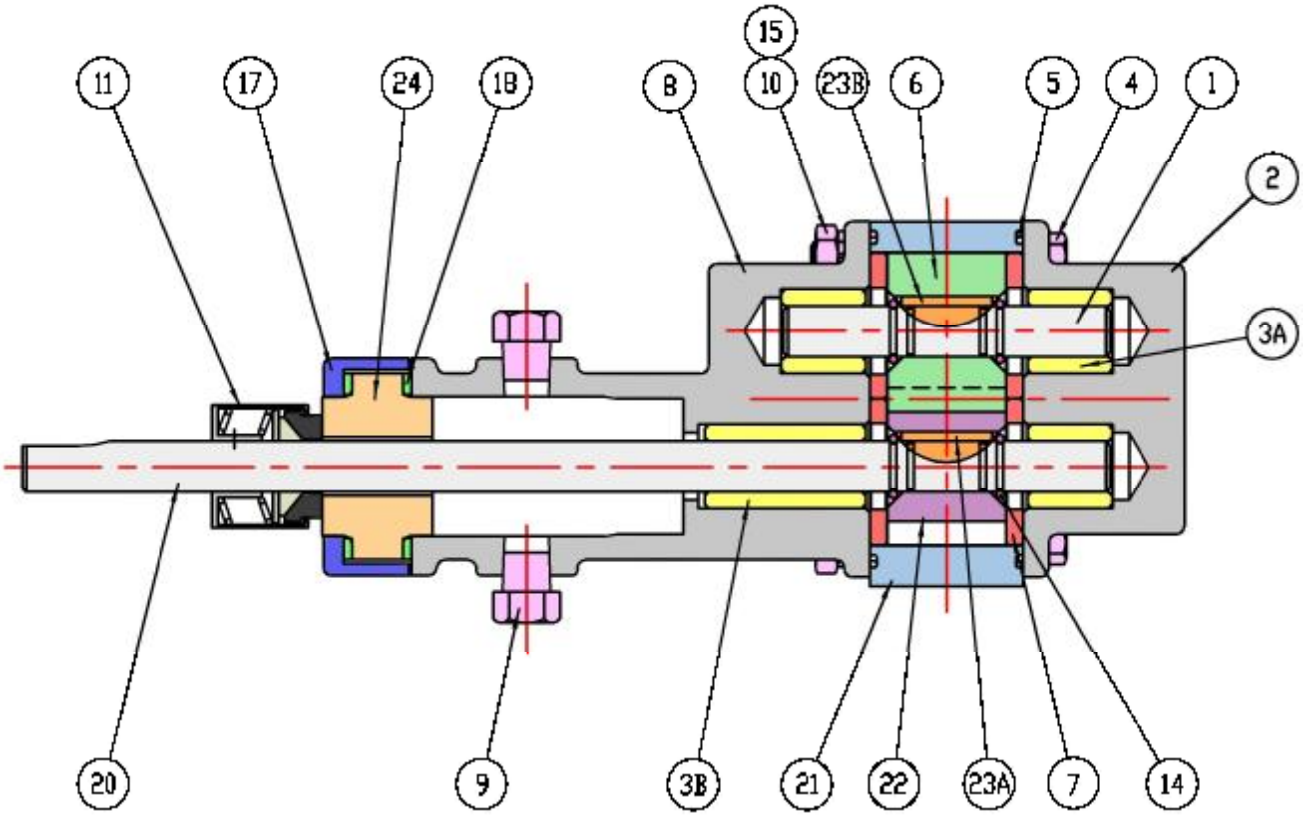

Item #	Description	Qty.	Item #	Description	Qty.
1	Idler Shaft	1	13	Pin, Bearing Lock (Not Shown)	4
2	Rear Housing	1	14	Retaining Ring, Gear	4
3A	Bearing, Short *	3	15	Lockwasher, Housing **	4
3B	Bearing, Long *	1	16	Screw, Gland (1/4-28 x 1 HHCS) (Not Shown)	2
4	Bolt, Housing (HHCS) **	4	17	Gland Plate	1
5	O-ring, Housing	2	18	Gasket, Seal Seat	2
6	Idler Gear	1	19	Lockwasher, Gland (1/4) (Not Shown)	2
7	Wear Plate	4	20	Drive Shaft	1
8	Front Housing	1	21	Center Housing	1
9	Plug, 1/8 NPT	2	22	Drive Gear	1
10	Nut, Housing **	4	23A	Key, Drive Gear	1
11	Mechanical Seal	1	23B	Key, Idler Gear	1
12	Pin, Housing Alignment (Not Shown)	4	24	Seal Seat	1

* Pump Models H7-H9, 37-39 & 311 each have four bearings of equal size. ** See Page 37 for bolt size.

Appendix 6: Reference Drawings (Continued)

Sectional Drawing #5 - Pump with DOUBLE MECHANICAL SEAL

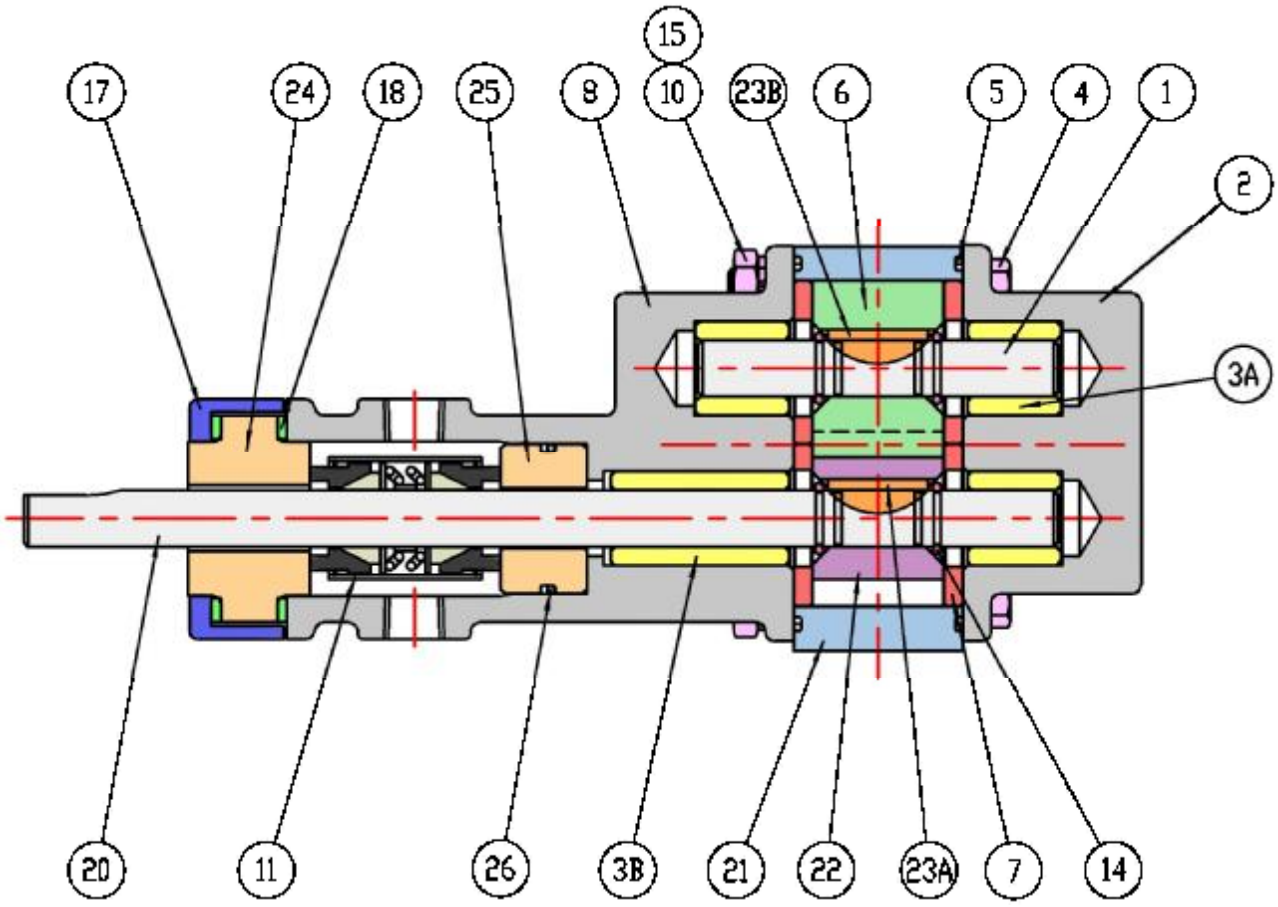

Item #	Description	Qty.	Item #	Description	Qty.
1	Idler Shaft	1	14	Retaining Ring, Gear	4
2	Rear Housing	1	15	Lockwasher, Housing **	4
3A	Bearing, Short *	3	16	Screw, Gland (1/4-28 x 1 HHCS) (Not Shown)	2
3B	Bearing, Long *	1	17	Gland Plate	1
4	Bolt, Housing (HHCS) **	4	18	Gasket, Seal Seat, Outer	2
5	O-ring, Housing	2	19	Lockwasher, Gland (1/4) (Not Shown)	2
6	Idler Gear	1	20	Drive Shaft	1
7	Wear Plate	4	21	Center Housing	1
8	Front Housing	1	22	Drive Gear	1
9	N/A	–	23A	Key, Drive Gear	1
10	Nut, Housing **	4	23B	Key, Idler Gear	1
11	Mechanical Seal, Double	1	24	Seal Seat, Outer	1
12	Pin, Housing Alignment (Not Shown)	4	25	Seal Seat, Inner	1
13	Pin, Bearing Lock (Not Shown)	4	26	O-ring, Seal Seat, Inner	1

* Pump Models H7-H9, 37-39 & 311 each have four bearings of equal size. ** See Page 37 for bolt size.

Appendix 6: Reference Drawings (Continued)

Exploded View Drawing #1 – Sealed Pump, Long-Coupled

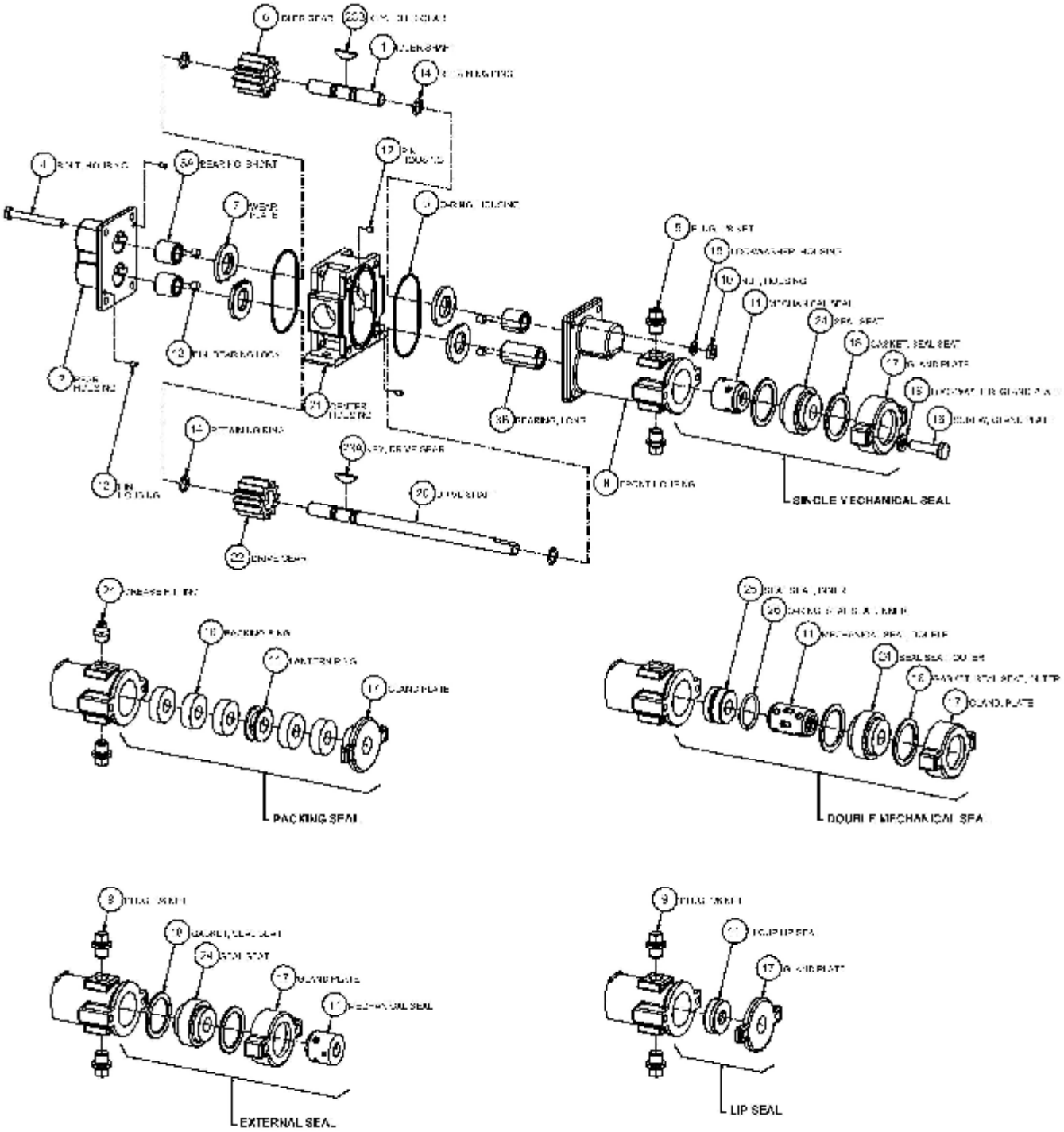

Note: Pump Models H7-H9, 37-39 & 311 each have four bearings of equal size.

Appendix 6: Reference Drawings (Continued)

Exploded View Drawing #2 – Sealed Pump, Close-Coupled

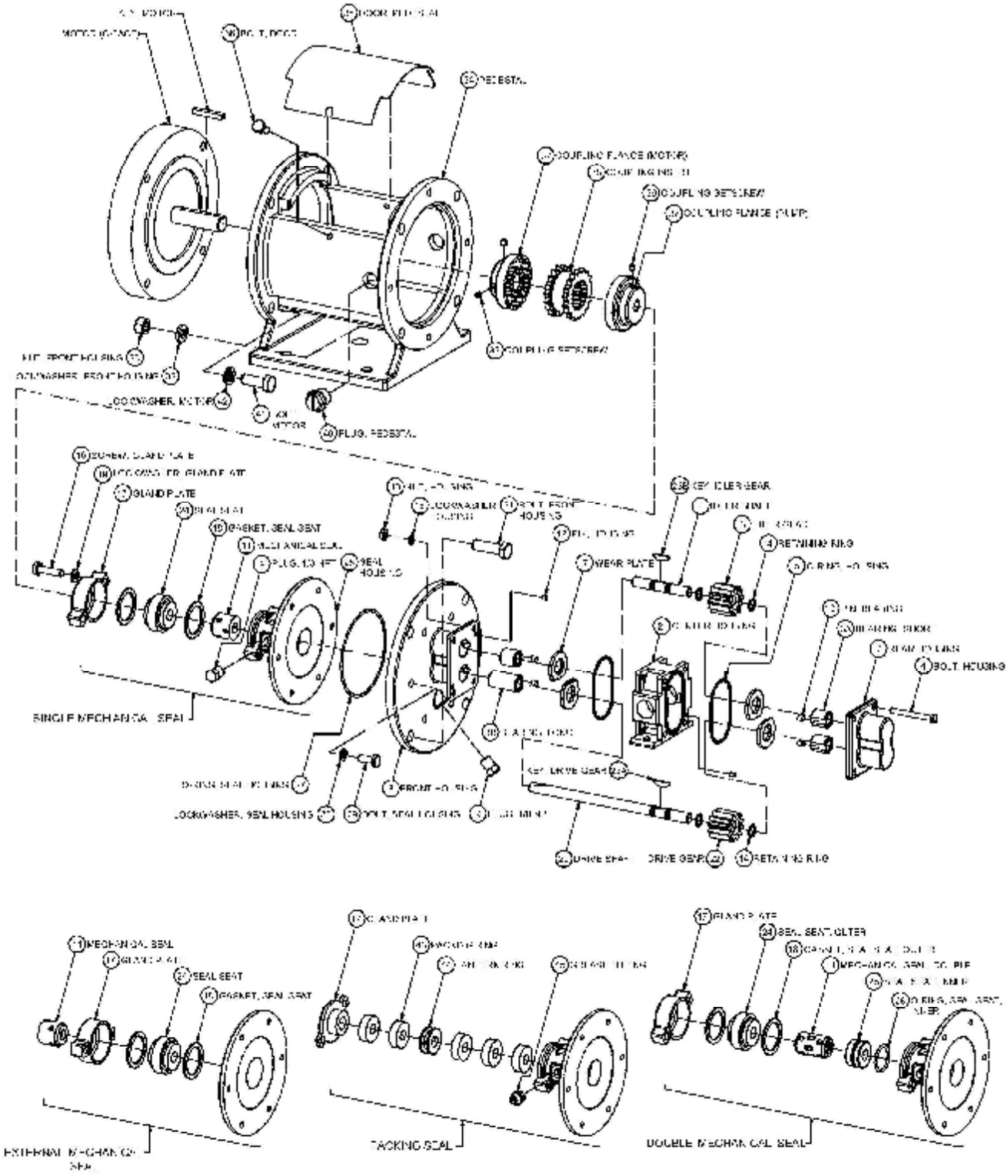

Note: Pump Models H7-H9, 37-39 & 311 each have four bearings of equal size.

Appendix 6: Reference Drawings (Continued)

Dimensional Drawing #1 – Sealed Pump with Threaded Ports, Long-Coupled

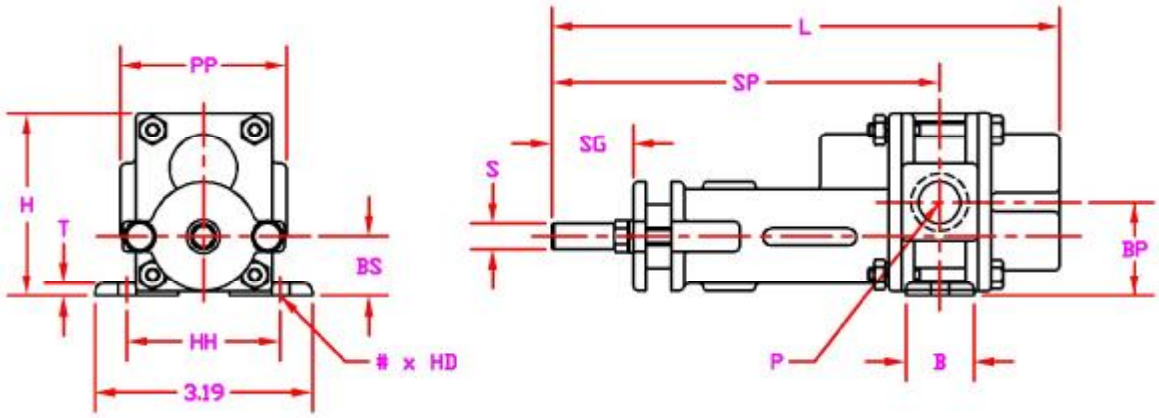

Dimensional Data – Pump Ports

Pump Models		Port Size, Threaded [1] (P)	Port-to-Port, Threaded (PP)	Port Size, Flanged [2] (P)		Port-to-Port, Flanged (PP)
				ANSI	DIN	
H-Series	3-Series	in	in	in	mm	in
H1F/H3F	31F/33F	1/4	2.68	1/2	10	10.00
H5R/H5F	35R/35F	1/2	2.44	1/2	15	10.00
H7N/H7R/H7F	37R/37F	3/4	3.32	3/4	20	10.00
H9R	39R	1	3.50	1	25	10.00
H9F	39F/311F	1 ¼	4.00	1 ¼	32	10.00

Dimensional Data (inches) – Not Dependent on Seal Arrangement

Pump Models		# x Hole Diameter (HD)	Pump Height (H)	Base Height (T)	Base Length (B)	Hole-to-Hole (HH)	Base-to-Shaft CL (BS)	Base-to-Port CL (BP)	Shaft Diameter (S)	
H-Series	3-Series								H-Series	3-Series
H1F/H3F	31F/33F	2 x 0.26	2.69	0.19	0.63	2.76	0.88	1.38	3/8	3/8
H5R/H5F	35R/35F	2 x 0.26	2.69	0.19	1.00	2.26	0.88	1.38	1/2	3/8
H7N/H7R/H7F	37R/37F	2 x 0.28	3.94	0.19	0.88	2.62	1.25	2.00	5/8	1/2
H9R	39R	2 x 0.28	4.06	0.28	1.50	2.62	1.38	2.13	5/8	5/8
H9F	39F	4 x 0.28	4.06	0.28	2.23	2.62	1.38	2.13	5/8	5/8
—	311F	4 x 0.28	4.06	0.28	2.23	2.62	1.38	2.13	—	1/2

Dimensional Data (inches) – Dependent on Seal Arrangement

Pump Models		Packing Seal			Lip Seal [4]			Single & Double Mech. Seals			External Mech. Seal [4]		
H-Series	3-Series	SG [5]	SP	L [3]	SG	SP	L [3]	SG	SP	L [3]	SG	SP	L [3]
H1F/H3F	31F/33F	1.19	5.44	6.94	1.57	5.44	6.94	1.12	5.44	6.94	1.84	6.16	7.66
H5R/H5F	35R/35F	1.17	5.67	7.42	1.55	5.67	7.42	1.10	5.67	7.42	2.23	6.80	8.55
H7N/H7R	37R	1.20	5.98	8.20	1.57	5.98	8.20	1.26	5.98	8.20	3.38	8.10	10.32
H7F	37F	1.07	5.98	8.32	1.45	5.98	8.32	1.13	5.98	8.32	3.25	8.10	10.44
H9R	39R	1.93	7.09	9.68	—	—	—	1.99	7.09	9.68	—	—	—
H9F	39F/311F	1.94	7.47	10.44	—	—	—	2.00	7.47	10.44	—	—	—

1 Threaded ports are NPT or BSPT.
2 Flanges are ANSI 150# RF or DIN PN16 (not shown).
3 Add 0.31 inches if pump has Bearing Flush Plugs installed.
4 Not applicable for H-Series pumps.
5 Minimum dimension.

SG = End of Shaft-to-Gland
SP = End of Shaft-to-Port CL
L = Length of Pump

Appendix 6: Reference Drawings (Continued)

Dimensional Drawing #2 – Sealed Pump with Threaded Ports, Close-Coupled

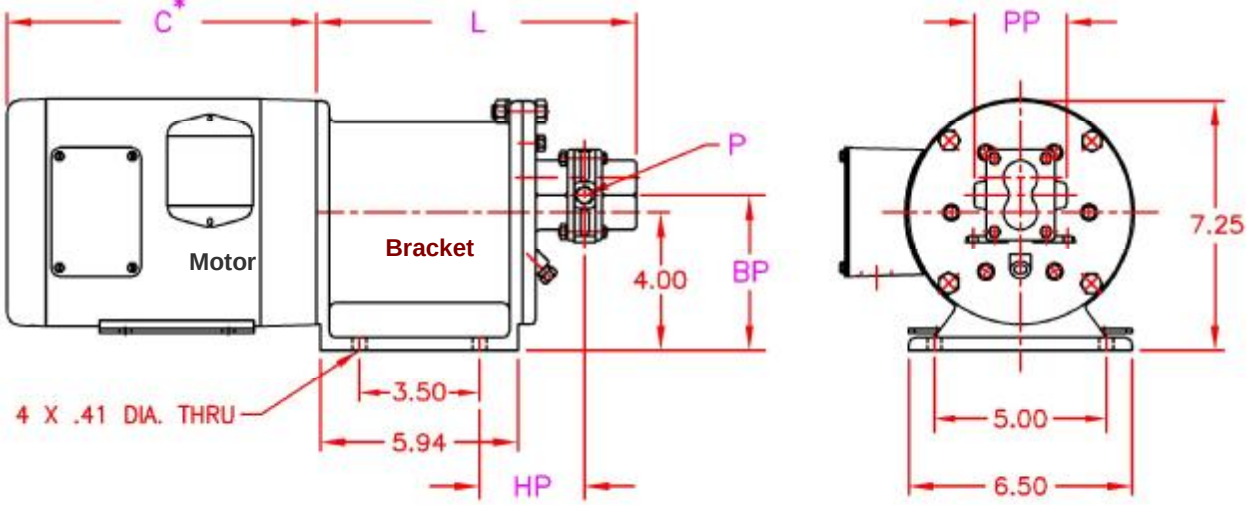

Dimensional Drawing #3 – Sealed Pump with Flanged Ports, Close-Coupled

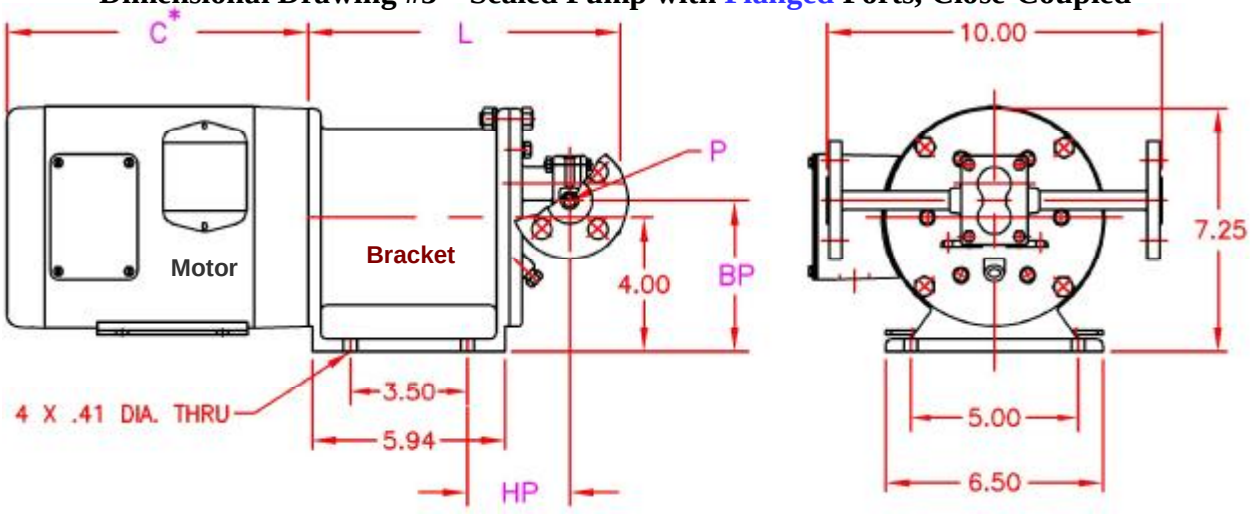

* See dimensional data from motor manufacturer for "C" Dimension.

Dimensional Data – Sealed Pump, Close-Coupled

Pump Models		Port Size, Threaded [1] (P)	Port Size, Flanged [2] (P)		Port-to-Port, Threaded (PP)	Length [3] (L)	Base-to-Port CL (BP)	Hole-to-Port CL (HP)
			ANSI	DIN				
H-Series	3-Series	in	in	mm	in	in	in	in
H1F/H3F	31F/33F	1/4	1/2	10	2.68	9.31	4.50	3.06
H5R/H5F	35R/35F	1/2	1/2	15	2.44	9.81	4.50	3.31
H7N/H7R	37R	3/4	3/4	20	3.32	10.72	4.75	3.75
H7F	37F	3/4	3/4	20	3.32	10.98	4.75	3.88
H9R	39R	1	1	25	3.50	11.47	4.75	4.12
H9F	39F/311F	1 ¼	1 ¼	32	4.00	12.22	4.75	4.50

1 Threaded ports are NPT or BSPT.
2 Flanges are ANSI 150# RF or DIN PN16.
3 Length (L) is measured from C-face of bracket to end of pump's rear housing. Add 0.31 inches if pump has Bearing Flush Plugs installed.

Appendix 7: Troubleshooting Guide

Troubleshooting Guide – Part 1

Problem	Possible Cause	Corrective Action
No discharge	Pump not primed	Verify suction pipe is submerged. Increase suction pressure. Open suction valve.
	Wrong direction of rotation	Reverse motor leads or reverse suction and discharge piping.
	Valves closed	Open all suction and discharge valves.
	Bypass valve open	Close bypass valve.
	Air leak in suction line	Tighten connections. Apply sealant to all threads. Verify suction pipe is submerged.
	Clogged strainer	Clean strainer.
	Pump worn or damaged	Rebuild pump.
Insufficient discharge	Suction pressure too low	Increase suction pressure. Verify suction piping is not too long. Fully open any suction valves.
	Bypass valve open	Close bypass valve.
	Partly clogged strainer	Clean strainer.
	Speed too low	Increase driver speed, if possible. Use larger size pump, if required.
	Pump worn or damaged	Rebuild pump.
Loss of suction after satisfactory operation	Pump not properly primed	Reprime pump.
	Air leaks in suction line	Tighten connections. Apply sealant to all threads. Inspect gaskets, if applicable. Verify suction pipe is submerged.
	Air or vapor pockets in suction line	Rearrange piping as necessary.
	Increase in fluid viscosity	Heat fluid to reduce viscosity. Reduce pump speed.
Excessive power consumption	Fluid viscosity higher than specified	Heat fluid to reduce viscosity. Reduce pump speed. Increase driver horsepower.
	Differential pressure greater than specified	Increase pipe diameter. Decrease pipe run.
	Gear clearances insufficient for fluid viscosity	Purchase gears trimmed for the correct viscosity.
	Plastic gear clearance insufficient for fluid temperature	Purchase plastic gear trimmed for the correct temperature.
	Rotating parts binding or severely worn	Disassemble pump and replace worn parts.

Appendix 7: Troubleshooting Guide (Continued)

Troubleshooting Guide – Part 2

Problem	Possible Cause	Corrective Action
Rapid pump wear	Abrasives in fluid	Install suction strainer. Limit solids concentration. Reduce pump speed or use larger pump running at lower speed.
	Corrosion wear	Use materials of construction that are acceptable for fluid being pumped.
	Extended dry running	Install power sensor to stop pump.
	Discharge pressure too high	Increase pipe diameter. Decrease pipe run.
	Housing stress from piping	Align piping with pump ports. Support piping independently of pump.
	Misalignment (long-coupled pump)	Align pump and motor.
Excessive noise and vibration	Suction and/or discharge piping not anchored or properly supported	Anchor per Hydraulic Institute Standards.
	Base not rigid enough	Tighten hold-down bolts on pump and motor or adjust stilts. Inspect grout and regrout if necessary.
	Worn pump bearings	Replace bearings.
	Worn motor bearings	Replace bearings or motor.
	Pump cavitation	Increase NPSH available.
	Misalignment (long-coupled pump)	Align pump and motor.
Excessive product leakage	Static seal failure caused by chemical incompatibility or thermal breakdown	Use O-rings or gaskets made of material compatible with fluid and temperature of the application.
	Static seal failure caused by improper installation	Install O-rings or gaskets without twisting or bending. Use star-pattern torque sequence on housing bolts during assembly. Allow Teflon O-rings to cold flow and seat during tightening. Torque bolts to specification.
	Dynamic seal worn or damaged	Disassemble and replace seal. Prime pump and avoid dry running.
	Pump port connections not properly sealed	Use Teflon tape or other suitable sealant. Use gaskets compatible with fluid and temperature of the application.
	Crevice corrosion of pump housing material	Only pump chemicals that are compatible with the pump housing material. Decrease temperature to reduce corrosion rate to acceptable value. Flush idle pumps that are used to pump corrosive chemicals. Eliminate contaminants in the fluid that can accelerate corrosion wear.

Liquiflo Chemical Processing Pumps www.liquiflo.com	SERIES	MODEL	CONFIGURATION	SEAL TYPE
	H-Series 3-Series	H1F or H3F 31F or 33F	Sealed or Mag-Drive Gear Pump Close-Coupled Version with NPT or BSPT Ports	Single, Double or External Mechanical Seal, Packing or Mag-Drive (Sealless)

UNITS: inches [mm]

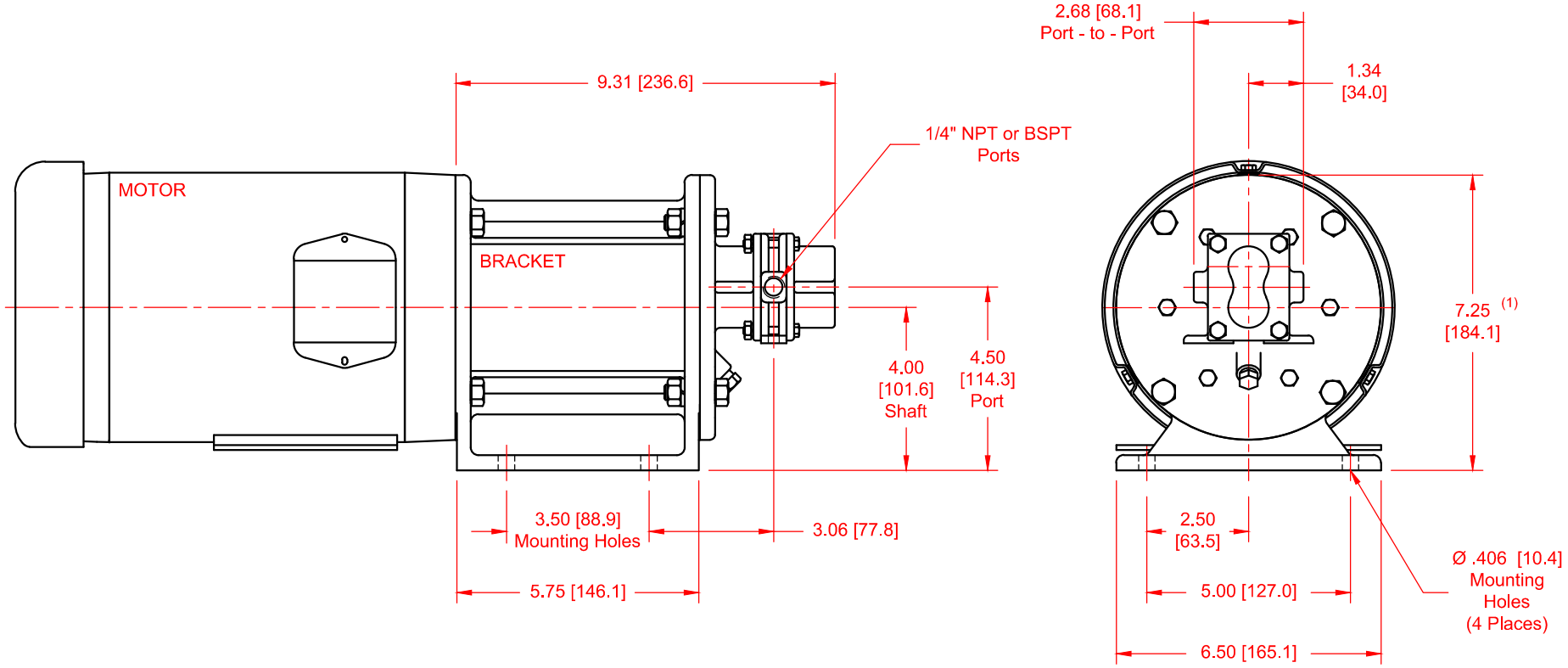

NOTES:
1) Dimension to top of Bracket.

DWG. NO. 20055 REV. E

SMVector NEMA1 | Standard Duty Inverter

Lenze

RoHS COMPLIANT

World Class Control

Modes of Operation
- Open Loop Flux Vector, Speed or Torque Control with/without Auto Tuning
- V/Hz (Constant or Variable)
- Base Frequency Adjustable to Motor Specs
- Enhanced V/Hz with Auto-tuning

Acceleration/Deceleration Profiles
- Two Independent Accel Ramps
- Two Independent Decel Ramps
- Linear, S-Type
- Auxiliary Ramp(or Coast)-to-Stop

Fixed Accel Boost for Improved Starting

500 Hz Output Frequency

High Carrier (PWM Sine-Coded) Frequency
- 4, 6, 8, 10 kHz

Universal Logic Assertion (Selectable)
- Positive or Negative Logic Input
- Digital Reference Available

Braking Functions
- DC Injection Braking
- Optional Dynamic Braking
- Flux Braking w/ Adjustable Flux Level & Decel Time

Speed Commands
- Keypad, Potentiometer
- Jog, 8 Preset Speeds
- Floating Point Control
- Sequencer, 16 Segments
- Voltage: Scalable 0 –10 VDC
- Current: Scalable 4 – 20 mA

Process Control
- PID Modes: Direct and Reverse Acting
- PID Sleep Mode w/ Adjustable Recovery Threshold
- Analog Output (Speed, Load, Torque, kW)
- Network Speed (Baud Rate)
- Terminal and Keypad Status
- Elapsed Run or Power On Time (Hours)

Status Outputs
- Programmable Form “A” Relay Output
- Programmable Open Collector Output
- Scalable 0-10 VDC / 2-10 VDC Analog Output
- 4-20mA w/500 Ohm Total Impedance

Environment

Ambient Temperature

-10 to 55°C

Derate 2.5% per °C Above 40°C

Comprehensive Diagnostic Tools

Real Time Monitoring
- 8 Register Fault History
- Software Version
- Drive Network ID
- DC Bus Voltage (V)
- Motor Voltage (V)
- Output Current (%)
- Motor Current (A)
- Motor Torque (%)
- Power (kW)
- Energy Consumption (kWh)
- Heatsink Temperature (°C)
- 0 – 10 VDC Input (User Defined)
- 4 – 20 mA Input (User Defined)
- PID Feedback (User Defined)

Vigilant System Protection

Voltage Monitoring
- Low and High DC Bus V Protection
- Low Line V Compensation

Current Monitoring
- Motor Overload Protection
- Current Limiting Safeguard
- Ground Fault
- Short Circuit Protection

Four ReStarts
- Three Flying and One Auto
- User Enabled

Loss of Follower Management
- Protective Fault
- Go to Preset Speed or Preset Setpoint
- Initiate System Notification

Over Temperature Protection

International Voltages

+10/-15% Tolerance

120/240V, 1Ø

200/240V, 1 or 3Ø

200/240V, 3Ø

400/480V, 3Ø

480/600V, 3Ø

Global Standards

UL EAC

cUL C-Tick

CE Low Voltage (EN61800-5-1)

CE EMC (EN61800-3) with optional EMC filter

Keypad & Display

Simple Six Button Programming
- Start
- Stop
- Forward/Reverse
- Scroll Up
- Scroll Down
- Enter/Mode

Informative LED Display

Vivid Illumination

Easily Read from a Distance

Five Status LEDs
- Run
- Automatic Speed mode
- Manual Speed Mode
- Forward Rotation
- Reverse Rotation

Status Display
- Motor Status
- Fault Management
- Operational Information

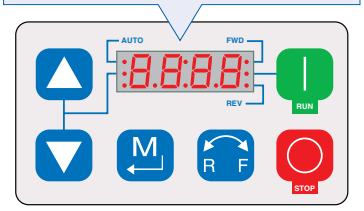

NEMA1 (Up to 10 HP) Keypad

NEMA1 (15 HP and greater) Keypad

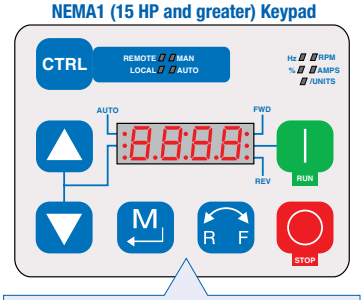

Additional CTRL Button

Switch between control modes
- Local-Manual
- Local Auto
- Remote-Manual
- Remote Auto

Additional LED Indicators

Define the units being displayed
- Hz
- RPM
- %
- Amps
- /Units

Control Terminals

Digital Inputs
- Dedicated Start/Stop
- (3) Programmable

Digital Outputs
- Form “A” Relay
- Open Collector

Analog Inputs
- 0 - 10 VDC
- 4 - 20 mA

Analog Outputs
- 0 - 10 VDC
- 2 - 10 VDC

Power Supplies
- 10 VDC Potentiometer Ref
- 12 VDC, 20 mA DI Ref or 0VDC Com
- 12 VDC, 50 mA Supply

Common

Additional Control Terminals (15 Hp & up)

1 Programmable Digital Input

1 Common

RS-485 Modbus Communications
- TXA
- TXB

Lenze Americas • 630 Douglas Street • Uxbridge, MA 01569 • USA • Sales 800 217-9100 • Service 508 278-9100 • www.Lenze.com

Lenze SMVector NEMA1 | Standard Duty Inverter

Ratings

120/240V* - 1Ø Input (3Ø Output)

Power		Output Current	NEMA1	
Hp	kW	I_N [A]	Model	Size
0.33	0.25	1.7	ESV251N01SXB	G1
0.5	0.37	2.4	ESV371N01SXB	G1
1	0.75	4.2	ESV751N01SXB	G1
1.5	1.1	6.0	ESV112N01SXB	G2

*120/240V models provide 0-230V output even with 120V input applied.

200/240V - 1 or 3Ø Input (3Ø Output)

Power		Output Current	NEMA1	
Hp	kW	I_N [A]	Model	Size
0.33	0.25	1.7	ESV251N02SXB***	G1
0.5	0.37	2.4	ESV371N02YXB	G1
1	0.75	4.2	ESV751N02YXB	G1
1.5	1.1	6.0	ESV112N02YXB	G2
2	1.5	7.0	ESV152N02YXB	G2
3	2.2	9.6	ESV222N02YXB	G2

***Model ESV251N02SXB is single-phase input only.

200/240V - 3Ø Input (3Ø Output)

Power		Output Current	NEMA1	
Hp	kW	I_N [A]	Model	Size
1.5	1.1	6.0	ESV112N02TXB	G2
2	1.5	7.0	ESV152N02TXB	G2
3	2.2	9.6	ESV222N02TXB	G2
5	4	16.5	ESV402N02TXB	G3
7.5	5.5	23	ESV552N02TXB	H1
10	7.5	29	ESV752N02TXB	H1
15	11	42	ESV113N02TXB	J1
20	15	54	ESV153N02TXB	J1

400/480V - 3Ø Input (3Ø Output)

Power		Output Current	NEMA1	
Hp	kW	I_N [A]	Model	Size
0.5	0.37	1.3/1.1	ESV371N04TXB	G1
1	0.75	2.4/2.1	ESV751N04TXB	G1
1.5	1.1	3.5/3.0	ESV112N04TXB	G2
2	1.5	4.0/3.5	ESV152N04TXB	G2
3	2.2	5.5/4.8	ESV222N04TXB	G2
5	4	9.4/8.2	ESV402N04TXB	G3
7.5	5.5	12.6/11	ESV552N04TXB	H1
10	7.5	16.1/14	ESV752N04TXB	H1
15	11	24/21	ESV113N04TXB	J1
20	15	31/27	ESV153N04TXB	J1
25	18.5	39/34	ESV183N04TXB	J1
30	22	46/40	ESV223N04TXB	J1
40	30	60/52	ESV303N04TXB	K1
50	37.5	75/65	ESV373N04TXB	K2
60	45	88/77	ESV453N04TXB	K3

600V - 3Ø Input (3Ø Output)

Power		Output Current	NEMA1	
Hp	kW	I_N [A]	Model	Size
1	0.75	1.7	ESV751N06TXB	G1
2	1.5	2.7	ESV152N06TXB	G2
3	2.2	3.9	ESV222N06TXB	G2
5	4	6.1	ESV402N06TXB	G3
7.5	5.5	9	ESV552N06TXB	H1
10	7.5	11	ESV752N06TXB	H1
15	11	17	ESV113N06TXB	J1
20	15	22	ESV153N06TXB	J1
25	18.5	27	ESV183N06TXB	J1
30	22	32	ESV223N06TXB	J1
40	30	41	ESV303N06TXB	K1
50	37.5	52	ESV373N06TXB	K2
60	45	62	ESV453N06TXB	K3

Dimensions

Dimensions

	H		W		D	
	in.	*mm*	*in.*	*mm*	*in.*	*mm*
G1	7.48	190	3.90	99	4.35	111
G2	7.52	191	3.90	99	5.45	138
G3	7.52	191	3.90	99	5.80	147
H1	9.85	250	5.12	130	6.30	160
J1	12.50	318	6.92	176	8.09	205
K1	14.19	360	8.72	221	10.07	256
K2	17.19	436	8.72	221	10.07	256
K3	20.19	513	8.72	221	10.07	256

SMV NEMA 1 (IP31)

Bottom Entry with IP21 Finger Guard

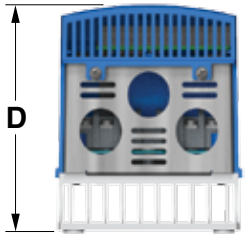

Bottom Entry with NEMA 1 (IP31) Steel Conduit Plate

Options

Communication Modules *

Item Number	Item Description
ESVZAC0	CANopen Communications Interface Module
ESVZAR0	RS-485/Modbus Communications Interface Module
ESVZAP0	PROFIBUS DP Communications Interface Module
ESVZAD0	DeviceNet Communications Interface Module
ESVZAE0	EtherNet/IP Communications Interface Module

* Only one Communication module can be installed and used at a time.

Keypad

ESVZXK1	Remote Keypad w/ drive interface module & cable up to 10HP (7.5 kW)
ESVZXH0	Remote Keypad w/ cable 15HP (11 kW) and up

Additional I/O **

ESVZAL0	Additional Form C Relay Output Module
ESVZAL1	Additional I/O Module w/ 1 Form C Relay Output and 2 Digital Inputs

** Additional I/O modules cannot be used with Communication modules or Remote keypad ESVZXK1.

Dynamic Braking Modules with Built-in Resistors

		Motor Voltage		
HP	(kW)	208 to 230 V Part Number	400 to 480 V Part Number	480 to 600 V Part Number
0.33 - 0.5	(0.25-0.37)	EZXDB3712A1	EZXDB3714A1	N/A
1 - 1.5	(0.75 - 1.1)	EZXDB1122A1	EZXDB1124A1	EZXDB1126A1
2 - 3	(1.5 - 2.2)	EZXDB2222A1	EZXDB2224A1	EZXDB2226A1
5	(4)	EZXDB4022A1	EZXDB4024A1	EZXDB4026A1
7.5	(5.5)	EZXDB5522A1	EZXDB5524A1	EZXDB5526A1
10	(7.5)	EZXDB7522A1	EZXDB7524A1	EZXDB7526A1

Dynamic Braking Modules without Built-in Resistors

15 - 20	(11 - 15)	EZXDC1532A1	N/A	N/A
15 - 30	(11 - 22)	N/A	EZXDC2234A1	EZXDC2236A1

Open Dynamic Braking Resistors with mounting brackets

15 - 20	(11 - 15)	841-009	841-009	841-010
25 - 30	(18.5 - 22)	N/A	841-011	841-012

SMV

Frequency Inverter

Flexible, simple, economical, robust.

SMV Inverter Drives .33 to 60 Hp (.25 to 45 kW)

The SMV range of NEMA 1 (IP31) and NEMA 4/4X (IP65) inverter drives offer sophisticated auto-tuning, fast dynamic torque response with impressive low-speed operation all from a compact and simple to use package.

The SMV range is designed for motor applications where dynamic speed and torque control is demanded, making the units ideal for conveyors, food production lines, packaging equipment plus fan and pump systems.

Features and Benefits

The SMV continues our price leadership tradition in the highly competitive AC drive market. With the benefit of a two year warranty, its performance and flexibility make it an attractive solution for a broad range of applications including:

- Food processing machinery
- Packaging machinery
- Material handling/conveying systems
- HVAC systems

The SMV makes good its promise of price leadership in delivering unparalleled performance and simplicity. The SMV is the right choice when you need it all – performance, power, packaging and intuitive programming.

Lenze

SMV

Features and Benefits

Superior Performance
- Modes of Operation:
  - V/Hz (Constant and Variable)
  - Enhanced V/Hz (Constant and Variable)
  - Vector Speed Control with 60:1 Speed Range
  - Vector Torque Control
- Dynamic Torque Response
- Sophisticated Auto-tuning (Motor Calibration)
- Impressive Low Speed Operation
- Sequencer with 16 Programmable segments, Delayed start/stop, Over 65K repeat cycles

Flexible Power Ranges

International Voltages:
- 120/240V 1Ø (up to 1.5 Hp)
- 200/240V 1/3Ø (up to 3 Hp)
- 200/240V 3Ø (up to 20 Hp)
- 400/480V 3Ø (up to 60 Hp)
- 480/600V 3Ø (up to 60 Hp)

Overload
- 150% overload for 60 sec's
- 200% for 15 sec's (up to 10 Hp [7.5 kW])
- 180% overload for 15 sec's
- (15 to 30 Hp [11 to 22 kW])

Industrial Grade Packaging
- NEMA Type 1 (IP31) Enclosure
- NEMA 4X (IP65) Indoor only
- NEMA 4X (IP65) Indoor/outdoor

Simplicity
- Intuitive User Interface
- Electronic Memory Module (EPM)

Options
- Disconnect Switch (NEMA 4X indoor only)
- Potentiometer Switch (NEMA 4X indoor only)
- EMC Filter (NEMA 4X)
- Dynamic Brake Modules
- Remote Keypad
- Additional I/O Module

EPM is your Ever Present Memory

When you need to program or replace a drive, whether it is 1 or 100 drives, the Electronic Programming Module (EPM) gets it done simply, quickly and most important, accurately. There is no hassle of reconfiguring each parameter or reseting the drive to factory or user default settings.

When drive reset is necessary, reset to factory default or customer settings in seconds with the EPM. When the EPM equipped drive is used on a line containing multiple drives with the identical setup, it takes just minutes to program the entire line. When a drive must be replaced, the parameter configuration is not lost, simply plug in the pre-programmed EPM. You are good to go with Ever Present Memory.

SMV NEMA 4X (IP65)

SMV NEMA 1 (IP31)

Dynamic Brake

SMV

Performance

Exceptional Starting Torque

Overpower demanding applications
The SMV is peerless in controlling the motor's ability to convert current into torque. In this example, the SMVector is started into a stiff 195% torque load. Not only does the motor start the load, but it also delivers a full 195% torque while accelerating to 50 Hz.

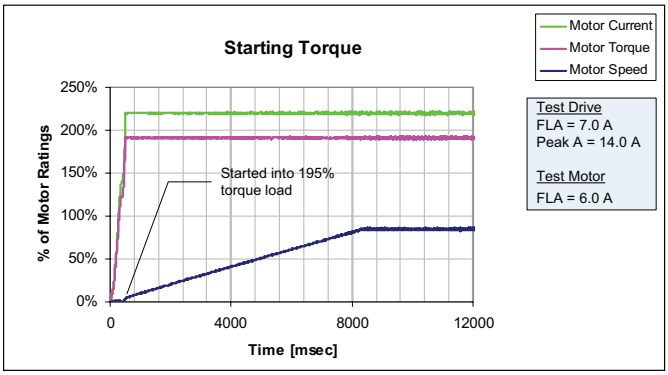

Quick Acceleration

0 to 100 in .33 seconds!
Motors controlled by the SMV benefit from a sophisticated motor control algorithm that drives motor performance to maximum levels. In this application, the the motor is able to drive a 165% torque load while accelerating from 0 to 100% speed in an impressive .33 seconds.

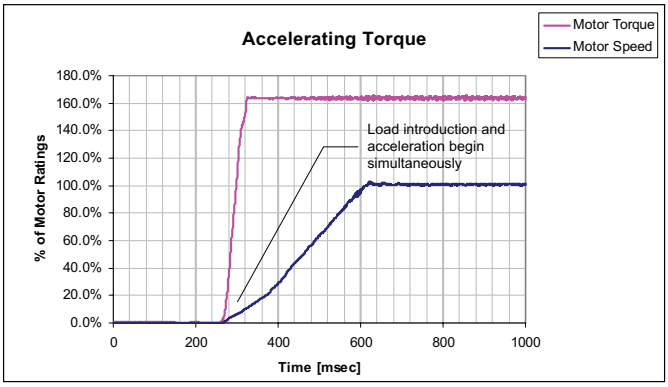

Dynamic Speed Regulation

Recovery from 100% shock load in .15 seconds
Shock loads are no match for the SMV. Here an instantaneous 100% load is dealt with in a mere .15 seconds. Remarkably, this level of speed regulation is achieved open loop without the benefit of a feedback device.

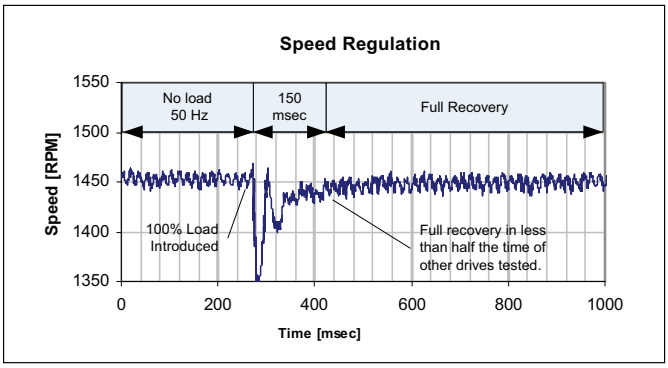

The SMV thrives in harsh environments

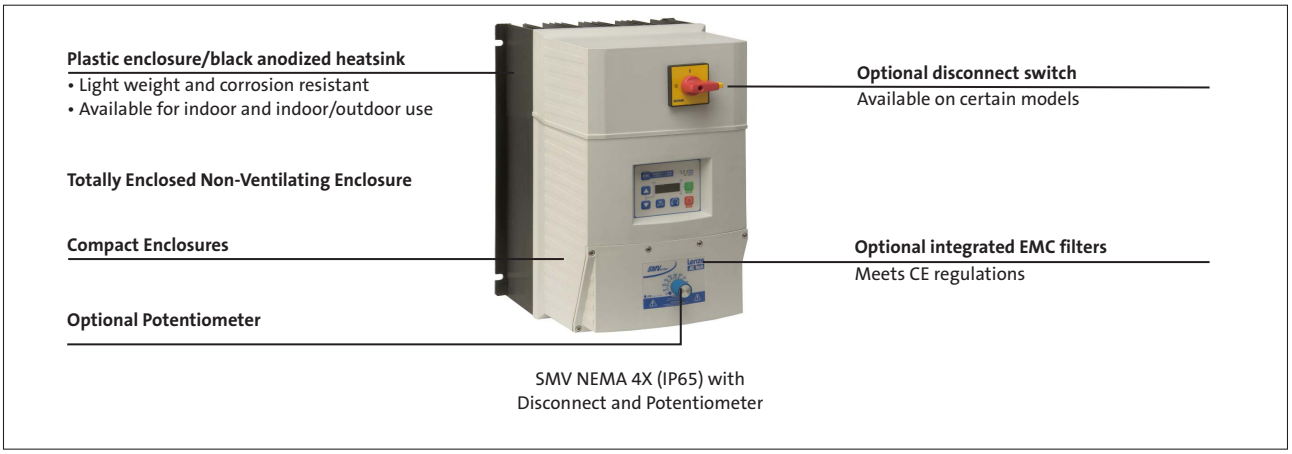

SMV

Specifications

World Class Control

Modes of Operation
- Sequencer, timing and step functions, Open Loop Flux Vector, Speed or Torque Control with/without Auto Tuning V/Hz (Constant or Variable)
- Base Frequency Adjustable to Motor Specs Enhanced V/Hz with Auto-tuning

Acceleration/Deceleration Profiles
- Two Independent Accel Ramps Two Independent Decel Ramps Linear, S-Type
- Auxiliary Ramp(or Coast)-to-Stop

Fixed Accel Boost for Improved Starting
500 Hz Output Frequency
High Carrier (PWM Sine-Coded)
Frequency 4, 6, 8, 10 kHz

Universal Logic Assertion (Selectable)
- Positive or Negative Logic Input Digital Reference Available

Braking Functions
- DC Injection Braking
- Optional Dynamic Braking
- Flux Braking w/adjustable Flux Level and Decel Time

Speed Commands
- Keypad, Potentiometer Jog and 8 Pre-set Speeds
- Floating Point Control Sequencer, 16 Segments
- Voltage: scalable 0 –10 VDC Current: scalable 4 – 20 mA

Process Control
- PID Modes: direct and reverse acting PID Sleep Mode w/ adjustable recovery threshold
- Analog Output (speed, load, torque, kW)
- Terminal and keypad status
- Elapsed Run or Power -On time (hours)

Status Outputs
- Programmable form “A” relay output
- Programmable open collector output
- Scalable 0-10 VDC/2-10 VDC analog output 4-20mA w/500 Ohm Total Impedance

Environment

Ambient Temperature
- -10 to 55°C
- Derate 2.5% per °C above 40°C

Comprehensive Diagnostic Tools

Real Time Monitoring
- 8 Register Fault History
- Software Version
- Drive Network ID
- DC Bus Voltage (V)
- Motor Voltage (V)
- Output Current (%)
- Motor Current (A)
- Motor Torque (%)
- Power (Hp, kW)
- Energy Consumption (kWh)
- Heatsink Temperature (°C)
- 0 – 10 VDC Input (user defined)
- 4 – 20 mA Input (user defined)
- PID Feedback (user defined)

Vigilant System Protection
Voltage Monitoring
- Low and High DC Bus V Protection
- Low Line V Compensation

Current Monitoring
Motor Overload Protection
- Current Limiting Safeguard
- Ground Fault
- Short Circuit Protection

Four Restart Modes
- Three Flying and One Auto
- User Enabled

Loss of Follower Management
- Protective fault
- Go to Pre-set speed or Pre-set set-point
- Initiate System notification

Over Temperature Protection

International Voltages

- +10/-15% Tolerance
- 120/240V, 1Ø
- 200/240V, 1 or 3Ø
- 200/240V, 3Ø
- 400/480V, 3Ø
- 480/600V, 3Ø

Global Standards

- UL EAC
- cUL C-Tick
- CE Low Voltage (EN61800-5-1)
- CE EMC (EN61800-3) with optional EMC filter
- RoHS
- EC

SMV

Specifications

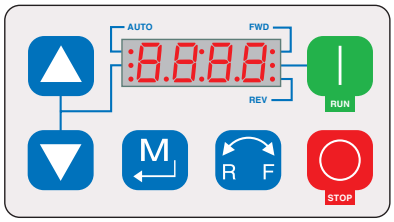

NEMA 1 (IP31) (up to 10 Hp)
NEMA 4X IP65

Simple Six Button Programming
Start, Stop, Forward/Reverse, Scroll Up, Scroll Down, Enter/Mode

Informative LED Display
Vivid Illumination
Easily Read from a Distance

Five Status LEDs
Run, Automatic Speed Mode, Manual Speed Mode, Forward Rotation, Reverse Rotation

Status Display
Motor Status, Fault Management, Operational Information

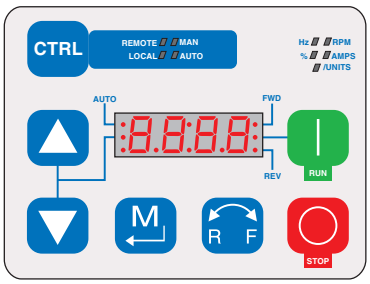

NEMA 1 (IP31) (15 Hp and greater)
NEMA 4X IP65

Additional CTRL Button
Switch between control modes
- Local-Manual
- Local-Auto
- Remote-Manual
- Remote-Auto

Additional LED Indicators
Define the units being displayed
- Hz
- RPM
- %
- Amps
- /Units

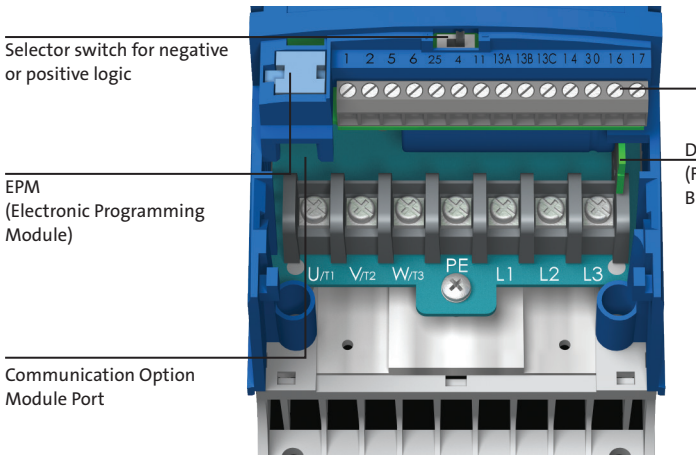

Removable terminal cover and steel conduit plate (not shown). Easy access for control and power wiring. An extra IP21 finger guard ships with every drive.

RoHS COMPLIANT

Control Terminals

Digital Inputs
- Dedicated Start/Stop
- (3) Programmable

Digital Outputs
- Form "A" Relay
- Open Collector

Analog Inputs
- 0 - 10 VDC
- 4 - 20 mA

Analog Outputs
- 0 - 10 VDC/2 - 10 VDC

Power Supplies
- 10 VDC Potentiometer Ref
- 12 VDC, 20 mA Digital Input Ref or 0VDC Common
- 12 VDC, 50 mA Supply Common

Additional Control Terminals
(NEMA1, 15 Hp and greater models)
1 Programmable Digital Input
1 Common
RS-485 Modbus Communications
- TXA
- TXB

SMV

Connectivity

With optional plug-in communication modules, the SMVector is easily integrated into any one of today's most commonly used industrial networks.

Whether the application is to automate a single machine or an entire facility, the SMVector is fully equipped to make the process a snap.

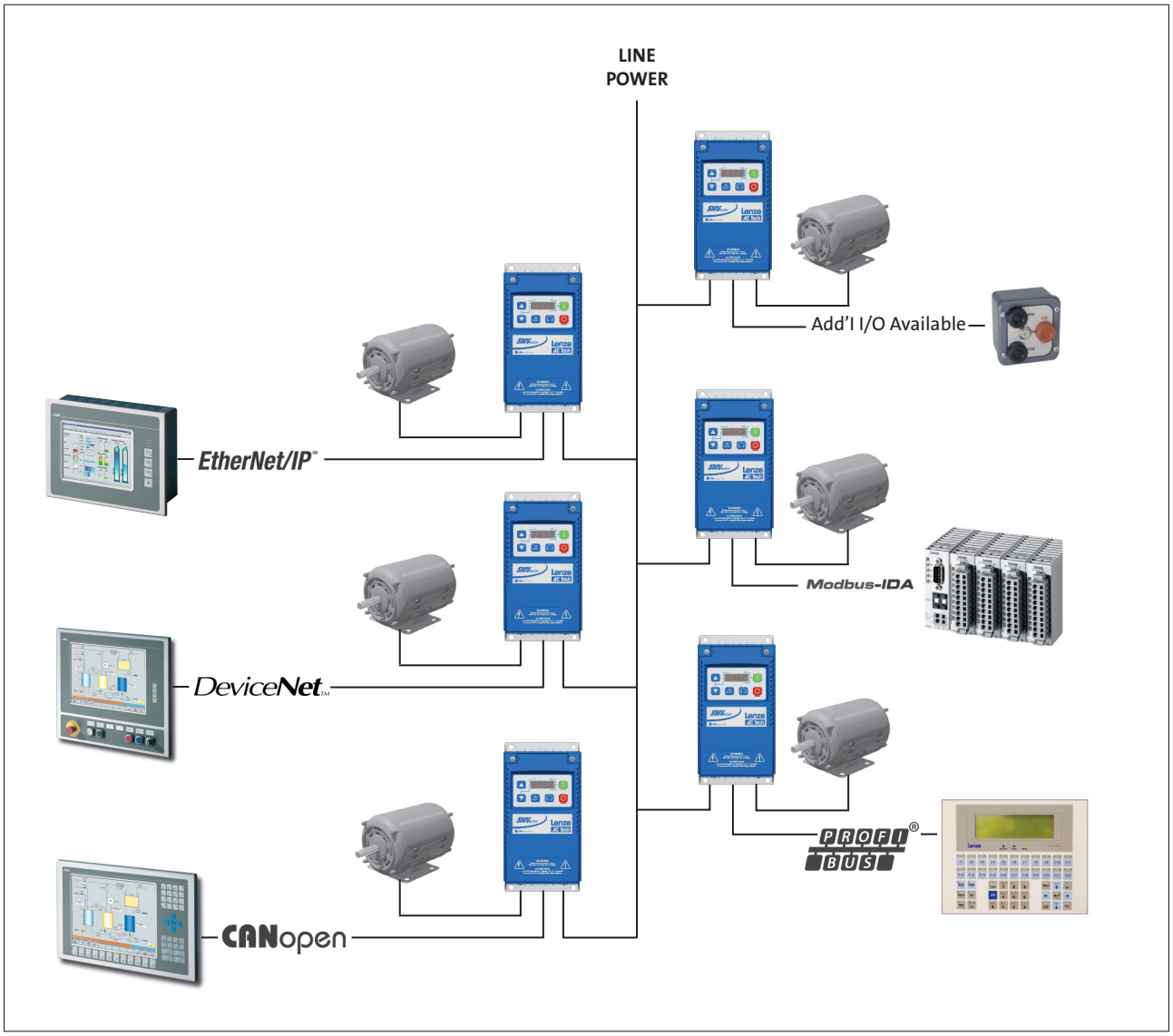

NOTE: Communication options are available in NEMA 1 (IP31) and NEMA 4X (IP65) models.

Setting up a drive in a network has never been so simple. Order the SMVector and your choice of communication module. Simply snap the communication module into the terminal cover and the drive is ready to connect to the network. Or if the SMVector is already installed it can be easily upgraded in the field.

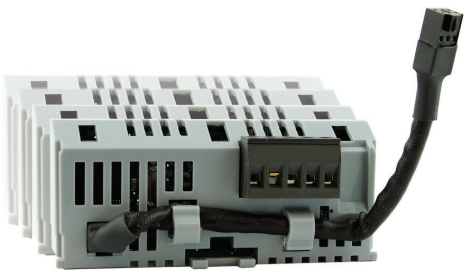

Communication Module

SMV

Ratings & Dimensions

120/240V* - 1Ø Input (3Ø Output)

Power		NEMA1		NEMA4X - Indoor [C]/Outdoor[E]		NEMA4X w/Disconnect -Indoor	
Hp	kW	Model	Size	Model	Size	Model	Size
0.33	0.25	ESV251N01SXB	G1	N/A			
0.5	0.37	ESV371N01SXB	G1	ESV371N01SX[C] or [E]	R1	ESV371N01SMC	AA1
1	0.75	ESV751N01SXB	G1	ESV751N01SX[C] or [E]	R1	ESV751N01SMC	AA1
1.5	1.1	ESV112N01SXB	G2	ESV112N01SX[C] or [E]	R2	ESV112N01SMC	AA2

*120/240V models provide 0-230V output even with 120V input applied.

200/240V - 1 or 3Ø Input (3Ø Output)

Power		NEMA1		NEMA4X - Indoor [C]/Outdoor[E]*		NEMA4X w/Disconnect - Indoor**	
Hp	kW	Model	Size	Model	Size	Model	Size
0.33	0.25	ESV251N02SXB***	G1	N/A			
0.5	0.37	ESV371N02YXB	G1	ESV371N02YX[C] or [E]	R1	ESV371N02YMC	AA1
1	0.75	ESV751N02YXB	G1	ESV751N02YX[C] or [E]	R1	ESV751N02YMC	AA1
1.5	1.1	ESV112N02YXB	G2	ESV112N02YX[C] or [E]	R2	ESV112N02YMC	AA2
2	1.5	ESV152N02YXB	G2	ESV152N02YX[C] or [E]	R2	ESV152N02YMC	AA2
3	2.2	ESV222N02YXB	G2	ESV222N02YX[C] or [E]	S1	ESV222N02YMC	AD1

*Filter versions are also available in 1-phase: Replace the “YX” in the Model Part Number with an “SF”.
**Filter versions are also available in 1-phase: Replace the “YM” in the Model Part Number with an “SL”.
***Model ESV251N02SXB is single-phase input only.

200/240V - 3Ø Input (3Ø Output)

Power		NEMA1		NEMA4X - Indoor [C or D]/Outdoor[E or F]		NEMA4X w/Disconnect - Indoor	
Hp	kW	Model	Size	Model	Size	Model	Size
5	4	ESV402N02TXB	G3	ESV402N02TX[C] or [E]	V1	ESV402N02TMC	AC1
7.5	5.5	ESV552N02TXB	H1	ESV552N02TX[D] or [F]	T1	ESV552N02TMD	AB1
10	7.5	ESV752N02TXB	H1	ESV752N02TX[D] or [F]	T1	ESV752N02TMD	AB1
15	11	ESV113N02TXB	J1	ESV113N02TX[D] or [F]	W1	ESV113N02TMD	AF1
20	15	ESV153N02TXB	J1	ESV153N02TX[D] or [F]	W1	ESV153N02TMD	AF1

400/480V - 3Ø Input (3Ø Output)

Power		NEMA1		NEMA4X - Indoor [C or D]/Outdoor[E or F]*		NEMA4X w/Disconnect - Indoor**	
Hp	kW	Model	Size	Model	Size	Model	Size
0.5	0.37	ESV371N04TXB	G1	ESV371N04TX[C] or [E]	R1	ESV371N04TMC	AA1
1	0.75	ESV751N04TXB	G1	ESV751N04TX[C] or [E]	R1	ESV751N04TMC	AA1
1.5	1.1	ESV112N04TXB	G2	ESV112N04TX[C] or [E]	R2	ESV112N04TMC	AA2
2	1.5	ESV152N04TXB	G2	ESV152N04TX[C] or [E]	R2	ESV152N04TMC	AA2
3	2.2	ESV222N04TXB	G2	ESV222N04TX[C] or [E]	R2	ESV222N04TMC	AA2
5	4	ESV402N04TXB	G3	ESV402N04TX[C] or [E]	V1	ESV402N04TMC	AC1
7.5	5.5	ESV552N04TXB	H1	ESV552N04TX[C] or [E]	V1	ESV552N04TMC	AC1
10	7.5	ESV752N04TXB	H1	ESV752N04TX[D] or [F]	T1	ESV752N04TMD	AB1
15	11	ESV113N04TXB	J1	ESV113N04TX[D] or [F]	W1	ESV113N04TMD	AE1
20	15	ESV153N04TXB	J1	ESV153N04TX[D] or [F]	W1	ESV153N04TMD	AE1
25	18.5	ESV183N04TXB	J1	ESV183N04TX[D] or [F]	W1	ESV183N04TMD	AF1
30	22	ESV223N04TXB	J1	ESV223N04TX[D] or [F]	X1	ESV223N04TMD	AF1
40	30	ESV303N04TXB	K1	N/A			
50	37.5	ESV373N04TXB	K2	N/A			
60	45	ESV453N04TXB	K3	N/A			

*Filter versions are also available: Replace the “X” in the Model Part Number with an “F”.
**Filter versions are also available: Replace the “M” in the Model Part Number with an “L”.

SMV

Ratings & Dimensions

600V - 3Ø Input (3Ø Output)

Power		NEMA1		NEMA4X - Indoor [C or D]/Outdoor[E or F]		NEMA4X w/Disconnect -Indoor	
Hp	kW	Model	Size	Model	Size	Model	Size
1	0.75	ESV751N06TXB	G1	ESV751N06TX[C] or [E]	R1	ESV751N06TMC	AA1
2	1.5	ESV152N06TXB	G2	ESV152N06TX[C] or [E]	R2	ESV152N06TMC	AA2
3	2.2	ESV222N06TXB	G2	ESV222N06TX[C] or [E]	R2	ESV222N06TMC	AA2
5	4	ESV402N06TXB	G3	ESV402N06TX[C] or [E]	V1	ESV402N06TMC	AC1
7.5	5.5	ESV552N06TXB	H1	ESV552N06TX[C] or [E]	V1	ESV552N06TMC	AC1
10	7.5	ESV752N06TXB	H1	ESV752N06TX[D] or [F]	T1	ESV752N06TMD	AB1
15	11	ESV113N06TXB	J1	ESV113N06TX[D] or [F]	W1	ESV113N06TMD	AE1
20	15	ESV153N06TXB	J1	ESV153N06TX[D] or [F]	W1	ESV153N06TMD	AE1
25	18.5	ESV183N06TXB	J1	ESV183N06TX[D] or [F]	W1	ESV183N06TMD	AF1
30	22	ESV223N06TXB	J1	ESV223N06TX[D] or [F]	X1	ESV223N06TMD	AF1
40	30	ESV303N06TXB	K1	N/A			
50	37.5	ESV373N06TXB	K2	N/A			
60	45	ESV453N06TXB	K3	N/A			

Dimensions

	H		W		D	
	in.	mm	in.	mm	in.	mm
G1	7.48	190	3.90	99	4.35	111
G2	7.52	191	3.90	99	5.45	138
G3	7.52	191	3.90	99	5.80	147
H1	9.83	250	5.12	130	6.30	160
J1	12.50	318	6.92	176	8.09	205
K1	14.19	360	8.72	221	10.07	256
K2	17.19	436	8.72	221	10.07	256
K3	20.19	513	8.72	221	10.07	256

R1	8.00	203	6.28	160	4.47	114
R2	8.00	203	6.28	160	6.31	160
S1	8.00	203	7.12	181	6.77	172
T1	10.00	254	8.04	204	8.00	203
V1	10.00	254	8.96	228	8.00	203
W1	14.50	368	9.42	240	9.45	241
X1	18.50	470	9.42	240	9.45	241
AA1	10.99	279	6.28	160	5.33	136
AA2	10.99	279	6.28	160	7.17	182
AB1	13.00	330	8.04	204	8.86	225
AC1	13.00	330	8.96	228	8.90	226
AD1	10.99	279	7.12	181	7.63	194
AE1	14.50	368	9.42	240	10.18	260
AF1	18.50	470	9.42	240	10.18	260

SMV NEMA 1 (IP31)

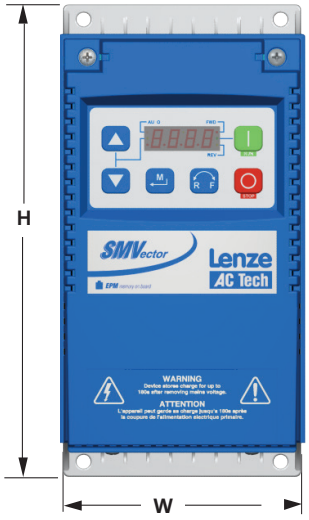

Bottom Entry with
NEMA 1 Steel Conduit Plate

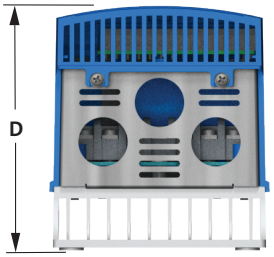

Bottom Entry with
IP31 Finger Guard

Lenze
AC Tech

SMVector - Frequency Inverter

Operating Instructions

Contents

1 Safety Information ... 3

2 Technical Data ... 6

2.1 Standards and Application Conditions ... 6
2.2 SMV Type Number Designation ... 7
2.3 Ratings ... 8

3 Installation ... 11

3.1 Dimensions and Mounting ... 11
3.1.1 NEMA 1 (IP31) Models ≤ 30HP (22kW) ... 11
3.1.2 NEMA 1 (IP31) Models > 30HP (22kW) ... 12
3.1.3 NEMA 4X (IP65) Models ... 13
3.1.4 NEMA 4X (IP65) Models with Disconnect Switch ... 14
3.2 Electrical Installation ... 15
3.2.1 Power Connections ... 15
3.2.1.1 Mains Connection to 120VAC Single-Phase Supply ... 15
3.2.1.2 Mains Connection to 240VAC Single-Phase Supply ... 16
3.2.1.3 Mains Connection to Three-Phase Supply ... 16
3.2.1.4 Motor Connection ... 16
3.2.1.5 Installation Recommendations for EMC Compliance ... 17
3.2.1.6 NEMA 4X (IP65) Input Terminal Block ... 17
3.2.1.7 Dynamic Brake Connections ... 18
3.2.2 Fuses/Cable Cross-Sections ... 19
3.2.3 Control Terminals ... 20

4 Commissioning ... 22

4.1 Local Keypad & Display ... 22
4.2 Drive Display and Modes of Operation ... 24
4.3 Parameter Setting ... 25
4.4 Electronic Programming Module (EPM) ... 25
4.5 Parameter Menu ... 26
4.5.1 Basic Setup Parameters ... 26
4.5.2 I/O Setup Parameters ... 30
4.5.3 Advanced Setup Parameters ... 34
4.5.4 PID Parameters ... 38
4.5.5 Vector Parameters ... 40
4.5.6 Network Parameters ... 42
4.5.7 Diagnostic Parameters ... 43
4.5.7.1 Terminal & Protection Status Display ... 44
4.5.7.2 Keypad Status Display ... 44
4.5.8 Onboard Communications Parameters 15-60HP (11-45kW) ... 45
4.5.9 Sequencer Parameters ... 46
4.5.9.1 Sequencer Flow Diagram Left ... 54
4.5.9.2 Sequencer Flow Diagram Right ... 55
4.5.9.3 Sequencer Status ... 56

5 Troubleshooting and Diagnostics ... 57

5.1 Status/Warning Messages ... 57
5.2 Drive Configuration Messages ... 58
5.3 Fault Messages ... 58

Appendix A ... 61

A.1 Permissable Cable Lengths ... 61

About These Instructions

This documentation applies to the SMV frequency inverter and contains important technical data regarding the installation, operation, and commissioning of the inverter.

These instructions are only valid for SMV frequency inverters with software revision 4.23 or higher
For version 4.23 software, the drive nameplate illustrated below would show “42” in the “F” location.

Please read these instructions in their entirety before commissioning the drive.

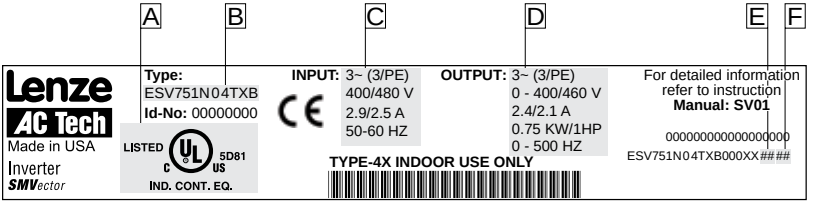

A	B	C	D	E	F
Certifications	Type	Input Ratings	Output Ratings	Hardware Version	Software Version

Scope of delivery	Important
• 1 SMV Inverter with EPM installed (see Section 4.4) • 1 Operating Instructions manual	After receipt of the delivery, check immediately whether the items delivered match the accompanying papers. Lenze AC Tech does not accept any liability for deficiencies claimed subsequently. Claim: • visible transport damage immediately to the forwarder. • visible deficiencies /incompleteness immediately to your Lenze AC Tech representative

Related Documents

The documentation listed herein contains information relevant to the operation of the SMVector frequency inverter. To obtain the latest documentation, visit the Technical Library at http://www.lenzeamericas.com.

Document #	Description
CMVINS01	SMVector Communications Module Installation Instruction
CMVMB401	SMVector ModBus RTU over RS485 Communications Reference Guide
CMVLC401	SMVector Lecom Communications Reference Guide
CMVCAN01	SMVector CANopen Communications Reference Guide
CMVDVN01	SMVector DeviceNet Communications Reference Guide
CMVETH01	SMVector EtherNet/IP Communications Reference Guide
CMVPFB01	SMVector PROFIBUS Communications Reference Guide
ALSV01	SMVector Additional I/O Module Installation and Operation Manual
DBV01	SMVector Dynamic Braking
PTV01	SMVector Potentiometer Install Instructions
RKV01	SMVector ESVZXK1 Remote Keypad
RKVU01	SMVector ESVZXH0 Remote Keypad (for NEMA 1 15-60HP (11-45kW) Drives)

Copyright © 2006 Lenze AC Tech Corporation

All rights reserved. No part of this manual may be reproduced or transmitted in any form without written permission from Lenze AC Tech Corporation. The information and technical data in this manual are subject to change without notice. Lenze AC Tech Corporation makes no warranty of any kind with respect to this material, including, but not limited to, the implied warranties of its merchantability and fitness for a given purpose. Lenze AC Tech Corporation assumes no responsibility for any errors that may appear in this manual.

All information given in this documentation has been carefully selected and tested for compliance with the hardware and software described. Nevertheless, discrepancies cannot be ruled out. Lenze AC Tech does not accept any responsibility nor liability for damages that may occur. Any necessary corrections will be implemented in subsequent editions. This document is printed in the United States

1 Safety Information

General

Some parts of Lenze AC Tech controllers can be electrically live and some surfaces can be hot. Non-authorized removal of the required cover, inappropriate use, and incorrect installation or operation creates the risk of severe injury to personnel and/or damage to equipment.

All operations concerning transport, installation, and commissioning as well as maintenance must be carried out by qualified, skilled personnel who are familiar with the installation, assembly, commissioning, and operation of variable frequency drives and the application for which it is being used.

Installation

Ensure proper handling and avoid excessive mechanical stress. Do not bend any components and do not change any insulation distances during transport, handling, installation or maintenance. Do not touch any electronic components or contacts. This drive contains electrostatically sensitive components, which can easily be damaged by inappropriate handling. Static control precautions must be adhered to during installation, testing, servicing and repairing of this drive and associated options. Component damage may result if proper procedures are not followed.

To ensure proper operation, do not install the drive where it is subjected to adverse environmental conditions such as combustible, oily, or hazardous vapors; corrosive chemicals; excessive dust, moisture or vibration; direct sunlight or extreme temperatures.

This drive has been tested by Underwriters Laboratory (UL) and is UL Listed in compliance with the UL508C Safety Standard. This drive must be installed and configured in accordance with both national and international standards. Local codes and regulations take precedence over recommendations provided in this and other Lenze AC Tech documentation.

The SMVector drive is considered a component for integration into a machine or process. It is neither a machine nor a device ready for use in accordance with European directives (reference machinery directive and electromagnetic compatibility directive). It is the responsibility of the end user to ensure that the machine meets the applicable standards.

Electrical Connection

When working on live drive controllers, applicable national safety regulations must be observed. The electrical installation must be carried out according to the appropriate regulations (e.g. cable cross-sections, fuses, protective earth [PE] connection). While this document does make recommendations in regards to these items, national and local codes must be adhered to.

The documentation contains information about installation in compliance with EMC (shielding, grounding, filters and cables). These notes must also be observed for CE-marked controllers. The manufacturer of the system or machine is responsible for compliance with the required limit values demanded by EMC legislation.

Application

The drive must not be used as a safety device for machines where there is a risk of personal injury or material damage. Emergency Stops, over-speed protection, acceleration and deceleration limits, etc must be made by other devices to ensure operation under all conditions.

The drive does feature many protection devices that work to protect the drive and the driven equipment by generating a fault and shutting the drive and motor down. Mains power variances can also result in shutdown of the drive. When the fault condition disappears or is cleared, the drive can be configured to automatically restart, it is the responsibility of the user, OEM and/or integrator to ensure that the drive is configured for safe operation.

Explosion Proof Applications

Explosion proof motors that are not rated for inverter use lose their certification when used for variable speed. Due to the many areas of liability that may be encountered when dealing with these applications, the following statement of policy applies:

Lenze AC Tech Corporation inverter products are sold with no warranty of fitness for a particular purpose or warranty of suitability for use with explosion proof motors. Lenze AC Tech Corporation accepts no responsibility for any direct, incidental or consequential loss, cost or damage that may arise through the use of AC inverter products in these applications. The purchaser expressly agrees to assume all risk of any loss, cost or damage that may arise from such application.

Operation

Systems including controllers must be equipped with additional monitoring and protection devices according to the corresponding standards (e.g. technical equipment, regulations for prevention of accidents, etc.). The controller may be adapted to your application as described in this documentation.

DANGER!

- After the controller has been disconnected from the supply voltage, live components and power connection must not be touched immediately, since capacitors could be charged. Please observe the corresponding notes on the controller.
- Close all protective covers and doors prior to and during operation.
- Do not cycle input power to the controller more than once every two minutes.
- For SMVector models that are equipped with a Disconnect Switch (11th character in model number is L or M), the Disconnect Switch is intended as a motor service disconnect and does not provide branch circuit protection to the inverter or motor. When servicing the motor, it is necessary to wait 3 minutes after turning this switch to the off position before working on motor power wiring as the inverter stores electrical power. To service the inverter, it is necessary to remove mains ahead of the drive and wait 3 minutes.

Safety Notifications

All safety information given in these Operating Instructions includes a visual icon, a bold signal word and a description.

Signal Word! (characterizes the severity of the danger)

NOTE (describes the danger and informs on how to proceed)

Icon	Signal Word	Meaning	Consequences if ignored
	DANGER!	Warns of hazardous electrical voltage.	Death or severe injuries.
	WARNING!	Warns of potential, very hazardous situations.	Risk of severe injury to personnel and/or damage to equipment.
	WARNING! Hot Surface	Warns of hot surface and risk of burns. Labels may be on or inside the equipment to alert people that surfaces may reach dangerous temperatures.	Risk of severe injury to personnel.
	STOP!	Warns of potential damage to material and equipment.	Damage to the controller/drive or its environment.
	NOTE	Designates a general, useful note.	None. If observed, then using the controller/ drive system is made easier.

Harmonics Notification in accordance with EN 61000-3-2, EN 61000-3-12:

Operation in public supply networks (Limitation of harmonic currents i.a.w. EN 61000-3-2, Electromagnetic Compatibility (EMC) Limits). Limits for harmonic current emissions (equipment input current up to 16A/phase).

Directive	Total Power connected to Mains (public supply)	Additional Measures Required for Compliance (2)
EN 61000-3-2	< 0.5kW	with mains choke
	0.5 ... 1kW	with active filter
	> 1kW	complies without additional measures
EN 61000-3-12	16 ... 75amp	Additional measures are required for compliance with the standard

(1) For compliance with EMC regulations, the permissable cable lengths may change.

(2) The additional measures described only ensure that the controller meets the requirements of the EN 61000-3-2. The machine/system manufacturer is responsible for the machine's compliance with the regulations.

Safety Information in accordance with EN 61800-5-1:

DANGER! Hazard of Electrical Shock
Capacitors retain charge for approximately 180 seconds after power is removed. Allow at least 3 minutes for discharge of residual charge before touching the drive.

WARNING!
- This product can cause a d.c. current in the PE conductor. Where a residual current-operated (RCD) or monitoring (RCM) device is used for protection in case of direct or indirect contact, only an RCD or RCM Type B is allowed on the supply side of this product.
- Leakage Current may exceed 3.5mA AC. The minimum size of the PE conductor shall comply with local safety regulations for high leakage current equipment.
- In a domestic environment, this product may cause radio interference in which case supplementary mitigation measures may be required.

NOTE
Control and communications terminals provide **reinforced insulation** (i.e. considered SELV or PELV, providing protection in case of direct contact) when the drive is connected to a power system rated up to 300VAC between phase to ground (PE) and the applied voltage on Terminals 16 and 17 is less than 150VAC between phase to ground. Otherwise, control and communications terminals provide **basic insulation**.

Safety Information in accordance with UL:

Note for UL approved system with integrated controllers: UL warnings are notes which apply to UL systems. The documentation contains special information about UL.

c UL us
Warnings!

- Suitable for use on a circuit capable of delivering not more than 200,000 rms symmetrical amperes, at the maximum voltage rating marked on the drive.
- Use minimum 75 °C copper wire only.
- Shall be installed in a pollution degree 2 macro-environment.
- NEMA 1 (IP31) models shall be installed in a pollution degree 2 macro-environment.
- All models are suitable for installation in a compartment handling Conditioned Air (i.e., plenum rated).

Torque Requirements (in accordance with UL) are listed in section 3.2.1, Power Connections.

2 Technical Data

2.1 Standards and Application Conditions

Conformity	CE	Low Voltage (2006/95/EC) & EMC (2004/108/EC) Directives
Approvals	UL508C	Underwriters Laboratories -Power Conversion Equipment
Input voltage phase imbalance	≤ 2%	
Supported Power Systems	TT TN	– For central grounded systems, operation is permitted without restrictions. – For corner grounded 400/500V systems, operation is possible but reinforced insulation to control circuits is compromised.
Humidity	≤ 95% non-condensing	
Temperature range	Transport	-25 … +70°C
	Storage	-20 … +70°C
	Operation	-10 … +55°C (with 2.5%/°C current derating above +40°C)
Installation height	0 - 4000m a.m.s.l.	(with 5%/1000 m current derating above 1000m a.m.s.l.)
Vibration resistance	acceleration resistant up to 1.0g	
⚠ **Earth leakage current**	> 3.5 mA to PE	
Max Permissable Cable Length (1)	<= 4.0 Hp (3.0 kW)	30 meters shielded, 60 meters un-shielded
	=> 5.0 Hp (3.7 kW)	50 meters shielded, 100 meters un-shielded.
Enclosure	IP31/NEMA 1	IP65/NEMA 4X
	NEMA 1 and NEMA 4X model enclosures are plenun rated in accordance with UL 508C and are suitable for installation in a compartment handling conditioned air.	
Protection measures against	short circuit, earth fault, phase loss, over voltage, under voltage, motor stalling, over temperature, motor overload	
Compliance with EN 61000-3-2 Requirements (2)	< 0.5kW	with mains choke
	0.5 ... 1kW	with active filter
	> 1kW	without additional measures
Compliance with EN 61000-3-12 Requirements (2)	16 ... 75amp	Additional measures required for compliance with EN 61000-3-12

Operation in public supply networks (Limitation of harmonic currents i.a.w. EN 61000-3-2, Electromagnetic Compatibility (EMC) Limits). Limits for harmonic current emissions (equipment input current up to 16A/phase).

(1) The stated cable lengths are permissible at default carrier frequencies (refer to parameter P166).

(2) The additional measures described only ensure that the controller meets the requirements of the EN 61000-3-2. The machine/system manufacturer is responsible for the machine's compliance with the regulations.

2.2 SMV Type Number Designation

The table herein describes the Type numbering designation for the SMVector Inverter models.

	ESV	152	N0	2	T	X	B
Electrical Products in the SMVector Series							
Power Rating in kW:							
251 = 0.25kW (0.33HP)	113 = 11.0kW (15HP)						
371 = 0.37kW (0.5HP)	153 = 15.0kW (20HP)						
751 = 0.75kW (1HP)	183 = 18.5kW (25HP)						
112 = 1.1kW (1.5HP)	223 = 22.0kW (30HP)						
152 = 1.5kW (2HP)	303 = 30.0kW (40HP)						
222 = 2.2kW (3HP)	373 = 37.5kW (50HP)						
302 = 3.0kW (4HP)	453 = 45.0kW (60HP)						
402 = 4.0kW (5HP)							
552 = 5.5kW (7.5HP)							
752 = 7.5kW (10HP)							
Installed I/O & Communication Module(s):							
C_ = CANopen (Available all models)	The "_" blank can be:						
D_ = DeviceNet (Available all models)	0 = Standard Keypad						
E_ = Ethernet/IP, (Available all models)							
R_ = RS-485 / ModBus /Lecom (Avail all models)							
P_ = ProfiBus-DP (Available all models)							
N_ = No Communications installed							
Input Voltage:							
1 = 120 VAC (doubler output) or 240 VAC							
2 = 240 VAC							
4 = 400/480 VAC							
6 = 600 VAC							
Input Phase:							
S = Single Phase Input only							
Y = Single or Three Phase Input							
T = Three Phase Input only							
Input Line Filter							
F = Integral EMC Filter							
L = Integral EMC Filter and Integrated Disconnect Switch (NEMA 4X/IP65 Models only)							
M = Integrated Disconnect Switch (NEMA 4X/IP65 Models only)							
X = No EMC Filter/ No Disconnect Switch							
Enclosure:							
B = NEMA 1/IP31; Indoor only							
C = NEMA 4X/IP65; Indoor only; Convection cooled							
D = NEMA 4X/IP65; Indoor only; Fan cooled							
E = NEMA 4X/IP65; Indoor/Outdoor; Convection cooled							
F = NEMA 4X/IP65; Indoor/Outdoor; Fan cooled							

NOTE

Prior to installation make sure the enclosure is suitable for the end-use environment

Variables that influence enclosure suitability include (but are not limited to) temperature, airborne contaminates, chemical concentration, mechanical stress and duration of exposure (sunlight, wind, precipitation).

2.3 Ratings

120V / 240VAC Models

Mains = 120V Single Phase (1/N/PE) (90...132V), 240V Single Phase (2/PE) (170...264V); 48...62Hz									
Type	Power		Mains Current		Output Current		Heat Loss (Watts)		
	Hp	kW	120V A	240V A	Cont (I_n) A	Max I %	N1/IP31	N4X/IP65 No filter	N4X/IP65 W/ filter
ESV251--1S--	0.33	0.25	6.8	3.4	1.7	200	24		
ESV371--1S--	0.5	0.37	9.2	4.6	2.4	200	32	32	
ESV751--1S--	1	0.75	16.6	8.3	4.2	200	52	41	
ESV112--1S--	1.5	1.1	20	10.0	6.0	200	74	74	

NOTES:

Output Current: The Output Current Maximum (%) is a percentage of the Output Current Continuous Amps (In) rating and is adjustable in parameter P171.

240VAC Models

Mains = 240V Single Phase (2/PE) (170...264V); 48...62Hz								
Type	Power		Mains Current	Output Current		Heat Loss (Watts)		
	Hp	kW	240V A	Cont (I_n) A	Max I %	N1/IP31	N4X/IP65 No filter	N4X/IP65 W/ filter
ESV251--2S--	0.33	0.25	3.4	1.7	200	20		
ESV371--2S--	0.5	0.37	5.1	2.4	200			30
ESV751--2S--	1	0.75	8.8	4.2	200			42
ESV112--2S--	1.5	1.1	12.0	6.0	200			63
ESV152--2S--	2	1.5	13.3	7.0	200			73
ESV222--2S--	3	2.2	17.1	9.6	200			97

240V Single Phase (2/PE) (170...264V), 240V Three Phase (3/PE) (170...264V); 48...62Hz									
Type	Power		Mains Current		Output Current		Heat Loss (Watts)		
	Hp	kW	1~ (2/PE) A	3~ (3/PE) A	Cont (I_n) A	Max I %	N1/IP31	N4X/IP65 No filter	N4X/IP65 W/ filter
ESV371--2Y--	0.5	0.37	5.1	2.9	2.4	200	27	26	
ESV751--2Y--	1	0.75	8.8	5.0	4.2	200	41	38	
ESV112--2Y--	1.5	1.1	12.0	6.9	6.0	200	64	59	
ESV152--2Y--	2	1.5	13.3	8.1	7.0	200	75	69	
ESV222--2Y--	3	2.2	17.1	10.8	9.6	200	103	93	

240V Three Phase (3/PE) (170...264V); 48...62Hz								
Type	Power		Mains Current	Output Current		Heat Loss (Watts)		
	Hp	kW	240V A	Cont (I_n) A	Max I %	N1/IP31	N4X/IP65 No filter	N4X/IP65 W/ filter
ESV112--2T--	1.5	1.1	6.9	6	200	64		
ESV152--2T--	2	1.5	8.1	7	200	75		
ESV222--2T--	3	2.2	10.8	9.6	200	103		
ESV402--2T--	5	4.0	18.6	16.5	200	154	139	
ESV552--2T--	7.5	5.5	26	23	200	225	167	
ESV752--2T--	10	7.5	33	29	200	274	242	
ESV113--2T--	15	11	48	42	180	485	468	
ESV153--2T--	20	15	59	54	180	614	591	

NOTES:

Output Current: The Output Current Maximum (%) is a percentage of the Output Current Continuous Amps (In) rating and is adjustable in parameter P171.

400...480VAC Models

400 ... 480V Three Phase (3/PE) (400V: 340...440V), (480V: 340...528V); 48...62Hz											
Type	Power		Mains Current		Output Current				Heat Loss (Watts)		
	Hp	kW	400V A	480V A	Cont (I_n) A		Max I %		N1/IP31	N4X/IP65 No filter	N4X/IP65 W/ filter
					400V	480V	400V	480V			
ESV371--4T--	0.5	0.37	1.7	1.5	1.3	1.1	175	200	23	21	25
ESV751--4T--	1	0.75	2.9	2.5	2.4	2.1	175	200	37	33	37
ESV112--4T--	1.5	1.1	4.2	3.6	3.5	3.0	175	200	48	42	46
ESV152--4T--	2	1.5	4.7	4.1	4.0	3.5	175	200	57	50	54
ESV222--4T--	3	2.2	6.1	5.4	5.5	4.8	175	200	87	78	82
ESV302--4T--	4	3.0	8.3	7.0	7.6	6.3	175	200			95
ESV402--4T--	5	4.0	10.6	9.3	9.4	8.2	175	200	128	103	111
ESV552--4T--	7.5	5.5	14.2	12.4	12.6	11.0	175	200	178	157	165
ESV752--4T--	10	7.5	18.1	15.8	16.1	14.0	175	200	208	190	198
ESV113--4T--	15	11	27	24	24	21	155	180	418	388	398
ESV153--4T--	20	15	35	31	31	27	155	180	493	449	459
ESV183--4T--	25	18.5	44	38	39	34	155	180	645	589	600
ESV223--4T--	30	22	52	45	46	40	155	180	709	637	647
ESV303--4T--	40	30	68	59	60	52	155	180	1020		
ESV373--4T--	50	37.5	85	74	75	65	155	180	1275		
ESV453--4T--	60	45	100	87	88	77	155	180	1530		

NOTES:

Output Current: The Output Current Maximum (%) is a percentage of the Output Current Continuous Amps (In) rating and is adjustable in parameter P171.

For 400...480 VAC models, the output current maximum (%) in the 400V column is used when P107 = 0
For 400...480 VAC models, the output current maximum (%) in the 480V column is used when P107 = 1

600VAC Models

600V Three Phase (3/PE) (425...660V); 48...62Hz								
Type	Power		Mains Current	Output Current		Heat Loss (Watts)		
	Hp	kW	A	Cont (I_n) A	Max I %	N1/IP31	N4X/IP65 No filter	N4X/IP65 W/ filter
ESV751--6T--	1	0.75	2	1.7	200	37	31	
ESV152--6T--	2	1.5	3.2	2.7	200	51	43	
ESV222--6T--	3	2.2	4.4	3.9	200	68	57	
ESV402--6T--	5	4	6.8	6.1	200	101	67	
ESV552--6T--	7.5	5.5	10.2	9	200	148	116	
ESV752--6T--	10	7.5	12.4	11	200	172	152	
ESV113--6T--	15	11	19.7	17	180	380	356	
ESV153--6T--	20	15	25	22	180	463	431	
ESV183--6T--	25	18.5	31	27	180	560	519	
ESV223--6T--	30	22	36	32	180	640	592	
ESV303--6T--	40	30	47	41	180	930		
ESV373--6T--	50	37.5	59	52	180	1163		
ESV453--6T--	60	45	71	62	180	1395		

NOTES:

Output Current: The Output Current Maximum (%) is a percentage of the Output Current Continuous Amps (In) rating and is adjustable in parameter P171.

STOP!

- For installations above 1000m a.m.s.l., derate I_n by 5% per 1000m, do not exceed 4000m a.m.s.l.
- Operation above 40°C, derate I_n by 2.5% per °C, do not exceed 55°C.

Output Current (In) derating for Carrier Frequency (P166) for NEMA 1 (IP31) Models:
- If P166=2 (8 kHz), derate I_n to 92% of drive rating
- If P166=3 (10 kHz), derate I_n to 84% of drive rating

Output Current (In) derating for Carrier Frequency (P166) for NEMA 4X (IP65) Models:
- If P166=1 (6 kHz), derate I_n to 92% of drive rating
- If P166=2 (8 kHz), derate I_n to 84% of drive rating
- If P166=3 (10 kHz), derate I_n to 76% of drive rating

3 Installation

3.1 Dimensions and Mounting

WARNING!
Drives must not be installed where subjected to adverse environmental conditions such as: combustible, oily, or hazardous vapors; corrosive chemicals; excessive dust, moisture or vibration; direct sunlight or extreme temperatures.

3.1.1 NEMA 1 (IP31) Models ≤ 30HP (22kW)

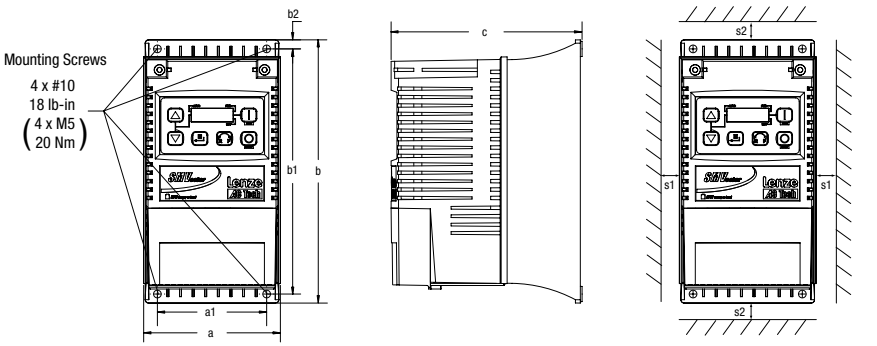

	Type	a in (mm)	a1 in (mm)	b in (mm)	b1 in (mm)	b2 in (mm)	c in (mm)	s1 in (mm)	s2 in (mm)	m lb (kg)
G1	ESV251~~~~~B; ESV371~~~~~B ESV751~~~~~B	3.90 (99)	3.12 (79)	7.48 (190)	7.00 (178)	0.24 (6)	4.35 (111)	0.6 (15)	2.0 (50)	2.0 (0.9)
G2	ESV112~~~~~B; ESV152~~~~~B ESV222~~~~~B	3.90 (99)	3.12 (79)	7.52 (191)	7.00 (178)	0.26 (7)	5.45 (138)	0.6 (15)	2.0 (50)	2.8 (1.3)
G3	ESV402~~~~~B	3.90 (99)	3.12 (79)	7.52 (191)	7.00 (178)	0.30 (8)	5.80 (147)	0.6 (15)	2.0 (50)	3.2 (1.5)
H1	ESV552~~~~~B; ESV752~~~~~B	5.12 (130)	4.25 (108)	9.83 (250)	9.30 (236)	0.26 (7)	6.30 (160)	0.6 (15)	2.0 (50)	6.0 (2.0)
J1	ESV113~~~~~B; ESV153~~~~~B ESV183~~~~~B; ESV223~~~~~B	6.92 (176)	5.75 (146)	12.50 (318)	11.88 (302)	0.31 (8)	8.09 (205)	0.6 (15)	2.0 (50)	13.55 (6.15)

Conduit Hole Dimensions	Type	N in (mm)	P in (mm)	P1 in (mm)	Q in (mm)	S in (mm)
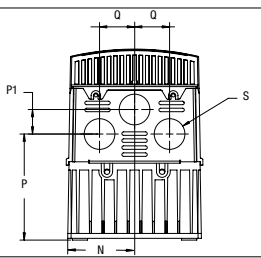	G1	1.84 (47)	1.93 (49)	.70 (18)	1.00 (25)	.88 (22)
	G2	1.84 (47)	3.03 (77)	.70 (18)	1.00 (25)	.88 (22)
	G3	1.84 (47)	3.38 (86)	.70 (18)	1.00 (25)	.88 (22)
	H1	2.46 (62)	3.55 (90)	.13 (3)	1.38 (35)	1.13 (29) .88 (22)
	J1	3.32 (84)	4.62 (117)	.73 (19)	1.40 (36)	1.31 (33) .88 (22)

3.1.2 NEMA 1 (IP31) Models > 30HP (22kW)

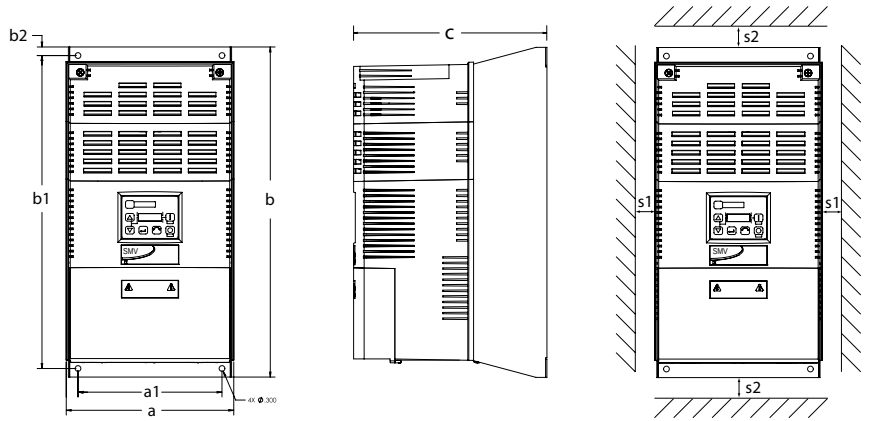

	Type	a in (mm)	a1 in (mm)	b in (mm)	b1 in (mm)	b2 in (mm)	c in (mm)	s1 in (mm)	s2 in (mm)	m lb (kg)
K1	ESV303~~4~~B; ESV303~~6~~B	8.72 (221)	7.50 (190)	14.19 (360)	13.30 (338)	0.45 (11.4)	10.07 (256)	0.6 (15)	2.0 (50)	24 (10.9)
K2	ESV373~~4~~B; ESV373~~6~~B	8.72 (221)	7.50 (190)	17.19 (436)	16.30 (414)	0.45 (11.4)	10.07 (256)	0.6 (15)	2.0 (50)	31 (14.1)
K3	ESV453~~4~~B ESV453~~6~~b	8.72 (221)	7.50 (190)	20.19 (513)	19.30 (490)	0.45 (11.4)	10.07 (256)	0.6 (15)	2.0 (50)	35 (15.9)

Conduit Hole Dimensions	Type	N in (mm)	P in (mm)	P1 in (mm)	Q in (mm)	S in (mm)	S1 in (mm)
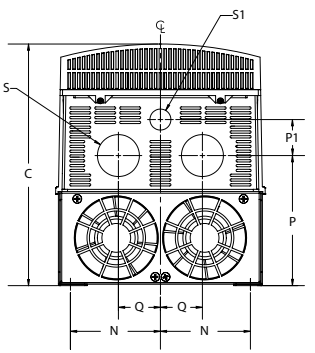	K1	3.75 (95)	5.42 (137)	1.50 (38.1)	1.75 (44.4)	1.75 (44.4)	0.875 (22.2)
	K2	3.75 (95)	5.42 (137)	1.50 (38.1)	1.75 (44.4)	1.75 (44.4)	0.875 (22.2)
	K3	3.75 (95)	5.42 (137)	1.50 (38.1)	1.75 (44.4)	1.75 (44.4)	0.875 (22.2)

3.1.3 NEMA 4X (IP65) Models

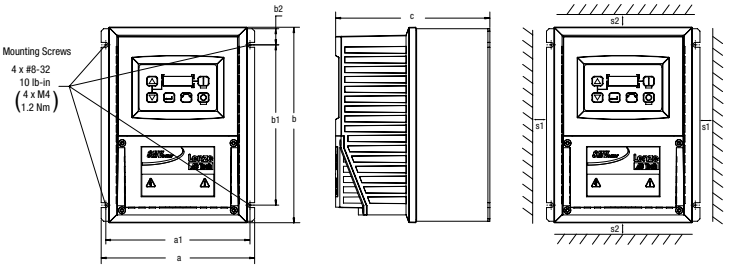

	Type	a in (mm)	a1 in (mm)	b in (mm)	b1 in (mm)	b2 in (mm)	c in (mm)	s1 in (mm)	s2 in (mm)	m lb (kg)
R1	ESV371N01SX_; ESV751N01SX_; ESV371N02YX_; ESV751N02YX_; ESV371N04TX_; ESV751N04TX_; ESV751N06TX_; ESV371N02SF_; ESV751N02SF_; ESV371N04TF_; ESV751N04TF_;	6.28 (160)	5.90 (150)	8.00 (203)	6.56 (167)	0.66 (17)	4.47 (114)	2.00 (51)	2.00 (51)	3.6 (1.63)
R2	ESV112N01SX_; ESV112N02YX_; ESV152N02YX_; ESV112N04TX_; ESV152N04TX_; ESV222N04TX_; ESV152N06TX_; ESV222N06TX_; ESV112N02SF_; ESV152N02SF_; ESV112N04TF_; ESV152N04TF_; ESV222N04TF_; ESV302N04TF_;	6.28 (160)	5.90 (150)	8.00 (203)	6.56 (167)	0.66 (17)	6.31 (160)	2.00 (51)	2.00 (51)	5.9 (2.68)
S1	ESV222N02YX_; ESV222N02SF_	7.12 (181)	6.74 (171)	8.00 (203)	6.56 (167)	0.66 (17)	6.77 (172)	2.00 (51)	2.00 (51)	7.1 (3.24)
T1	ESV552N02TX~; ESV752N02TX~ ESV752N04TX~; ESV752N06TX~; ESV752N04TF~	8.04 (204)	7.56 (192)	10.00 (254)	8.04 (204)	0.92 (23)	8.00 (203)	4.00 (102)	4.00 (102)	10.98 (4.98)
V1	ESV402N02TX_; ESV402N04TX_; ESV552N04TX_; ESV402N06TX_ ESV552N06TX_; ESV402N04TF_; ESV552N04TF_	8.96 (228)	8.48 (215)	10.00 (254)	8.04 (204)	0.92 (23)	8.00 (203)	4.00 (102)	4.00 (102)	11.58 (5.25)
W1	ESV113N02TX~; ESV153N02TX~ ESV113N04TX~; ESV153N04TX~ ESV113N04TF~; ESV153N04TF~ ESV113N06TX~; ESV153N06TX~ ESV183N04TX~; ESV183N04TF~ ESV183N06TX~	9.42 (240)	8.94 (228)	14.50 (368)	12.54 (319)	0.92 (24)	9.45 (241)	4.00 (102)	4.00 (102)	22.0 (10.0)
X1	ESV223N04TX~; ESV223N04TF~ ESV223N06TX~	9.42 (240)	8.94 (228)	18.5 (470)	16.54 (420)	0.92 (24)	9.45 (241)	4.00 (102)	4.00 (102)	25.5 (11.6)

_ = Last digit of part number: C = N4X Indoor (convection cooled) E = N4X In/Outdoor (convection cooled)

~ = Last digit of part number: D = N4X Indoor (fan cooled) F = N4X In/Outdoor (fan cooled)

Conduit Hole Dimensions

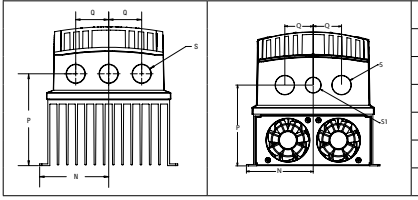

Type	N in (mm)	P in (mm)	Q in (mm)	S in (mm)	S1 in (mm)
R1	3.14 (80)	2.33 (59)	1.50 (38)	.88 (22)	n/a
R2	3.14 (80)	4.18 (106)	1.50 (38)	.88 (22)	n/a
S1	3.56 (90)	4.63 (118)	1.50 (38)	.88 (22)	n/a
T1	4.02 (102)	5.00 (127)	1.85 (47)	1.06 (27)	n/a
V1	4.48 (114)	5.00 (127)	1.85 (47)	1.06 (27)	n/a
W1	4.71 (120)	5.70 (145)	2.00 (51)	1.375 (35)	1.125 (28)
X1	4.71 (120)	5.70 (145)	2.00 (51)	1.375 (35)	1.125 (28)

3.1.4 NEMA 4X (IP65) Models with Disconnect Switch

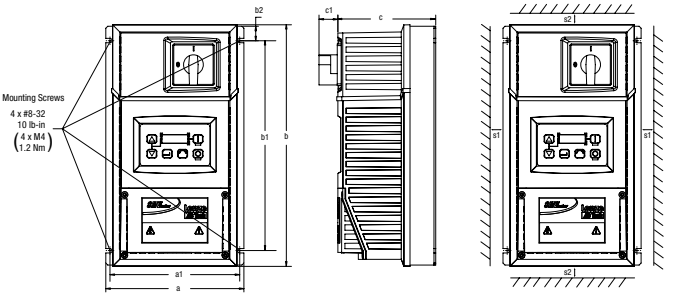

	Type	a in (mm)	a1 in (mm)	b in (mm)	b1 in (mm)	b2 in (mm)	c in (mm)	c1 in (mm)	s1 in (mm)	s2 in (mm)	m lb (kg)
AA1	ESV371N01SM_; ESV371N02YM_; ESV371N02SL_; ESV371N04TM_; ESV371N04TL_; ESV371N06TM_; ESV751N01SM_; ESV751N02YM_; ESV751N02SL_; ESV751N04TM_; ESV751N04TL_; ESV751N06TM_;	6.28 (160)	5.90 (150)	10.99 (279)	9.54 (242)	0.66 (17)	4.47 (114)	.86 (22)	2.00 (51)	2.00 (51)	4.7 (2.13)
AA2	ESV112N01SM_; ESV112N02YM_; ESV112N02SL_; ESV112N04TM_; ESV112N04TL_; ESV152N02YM_; ESV152N02SL_; ESV152N04TM_; ESV152N04TL_; ESV152N06TM_; ESV222N04TM_; ESV222N04TL_; ESV222N06TM_; ESV302N04TL_;	6.28 (160)	5.90 (150)	10.99 (279)	9.54 (242)	0.66 (17)	6.31 (160)	.86 (22)	2.00 (51)	2.00 (51)	7.9 (3.58)
AD1	ESV222N02SL_; ESV222N02YM_;	7.12 (181)	6.74 (171)	10.99 (279)	9.54 (242)	0.66 (17)	6.77 (172)	.86 (22)	2.00 (51)	2.00 (51)	9.0 (4.08)
AB1	ESV552N02TM~; ESV752N02TM~ ESV752N04TM~; ESV752N06TM~; ESV752N04TL~	8.04 (204)	7.56 (192)	13.00 (330)	11.04 (280)	0.92 (23)	8.00 (203)	.86 (22)	4.00 (102)	4.00 (102)	13.9 (6.32)
AC1	ESV402N02TM_; ESV402N04TM_; ESV552N04TM_; ESV402N06TM_; ESV552N06TM_; ESV402N04TL_; ESV552N04TL_	8.96 (228)	8.48 (215)	13.00 (330)	11.04 (280)	0.92 (23)	8.04 204)	.86 (22)	4.00 (102)	4.00 (102)	14.7 (6.66)
AE1	ESV113N04TM~; ESV153N04TM~, ESV113N06TM~; ESV153N06TM~	9.42 (240)	8.94 (228)	14.50 (368)	12.54 (319)	0.92 (24)	9.45 (241)	0.73 (19)	4.00 (102)	4.00 (102)	23.0 (10.4)
AF1	ESV113N02TM~; ESV153N02TM~ ESV113N04TL~; ESV153N04TL~ ESV183N04TL~; ESV223N04TL~ ESV183N04TM~; ESV223N04TM~ ESV183N06TM~; ESV223N06TM~	9.42 (240)	8.94 (228)	18.5 (470)	16.54 (420)	0.92 (24)	9.45 (241)	0.73 (19)	4.00 (102)	4.00 (102)	28.5 (12.9)

_ = Last digit of part number: C = N4X Indoor (convection cooled) ~ = Last digit of part number: D = N4X Indoor (fan cooled)

Conduit Hole Dimensions		Type	N in (mm)	P in (mm)	Q in (mm)	S in (mm)	S1 in (mm)
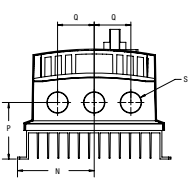	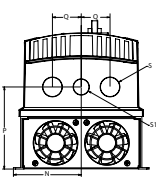	AA1	3.14 (80)	2.33 (59)	1.50 (38)	.88 (22)	n/a
		AA2	3.14 (80)	4.18 (106)	1.50 (38)	.88 (22)	n/a
		AD1	3.56 (90)	4.63 (118)	1.50 (38)	.88 (22)	n/a
		AB1	4.02 (102)	5.00 (127)	1.85 (47)	1.06 (27)	n/a
		AC1	4.48 (114)	5.00 (127)	1.85 (47)	1.06 (27)	n/a
		AE1	4.71 (120)	5.70 (145)	2.00 (51)	1.375 (35)	1.125 (28)
		AF1	4.71 (120)	5.70 (145)	2.00 (51)	1.375 (35)	1.125 (28)

3.2 Electrical Installation

Installation After a Long Period of Storage

STOP!
Severe damage to the drive can result if it is operated after a long period of storage or inactivity without reforming the DC bus capacitors.

If input power has not been applied to the drive for a period of time exceeding three years (due to storage, etc), the electrolytic DC bus capacitors within the drive can change internally, resulting in excessive leakage current. This can result in premature failure of the capacitors if the drive is operated after such a long period of inactivity or storage.

In order to reform the capacitors and prepare the drive for operation after a long period of inactivity, apply input power to the drive for 8 hours prior to actually operating the motor.

3.2.1 Power Connections

STOP!
If the kVA rating of the AC supply transformer is greater than 10 times the input kVA rating of the drive(s), an isolation transformer or 2-3% input line reactor must be added to the line side of the drive(s).

DANGER! Hazard of electrical shock!
Circuit potentials up to 600 VAC are possible. Capacitors retain charge after power is removed. Disconnect power and wait at least three minutes before servicing the drive.

STOP!
- Verify mains voltage before connecting to drive.
- Do not connect mains power to the output terminals (U,V,W)! Severe damage to the drive will result.
- Do not cycle mains power more than once every two minutes. Damage to the drive may result.

Mains and Motor Terminations		
Type	**Torque**	**Strip Length**
<5HP	12 lb-in (1.3 Nm)	5/16 in (8mm)
ESV552xx2T, ESV752xx2T, ESV113xx4/6, ESV153xx4/6, ESV183xx6, ESV223xx6	16 lb-in (1.8 Nm)	5/16 in (8mm)
ESV552xx4Txx, ESV752xx4Txx, ESV552xx6Txx, ESV752xx6Txx	12 lb-in (1.3Nm)	0.25 in (6mm)
ESV113xx2xxx, ESV153xx2xxx, ESV183xx4xxx, ESV223xx4xxx, ESV303xx4xxx	24 lb-in (2.7 Nm)	7/16 in (10mm)
ESV373xx4xxx, ESV453xx4xxx	27 lb-in (3.05 Nm)	0.75 in (19mm)
Torque: N4X/IP65 Door Screws		
N4X/IP65	6-7 lb-in (0.67-0.79 Nm)	0.25 in (6mm)

3.2.1.1 Mains Connection to 120VAC Single-Phase Supply

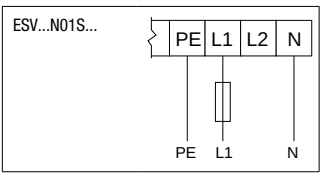

3.2.1.2 Mains Connection to 240VAC Single-Phase Supply

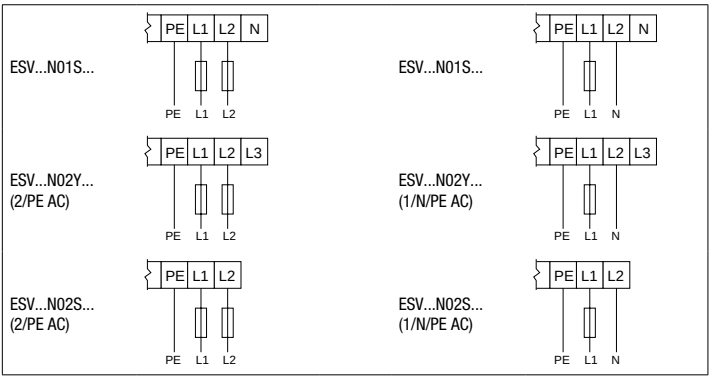

3.2.1.3 Mains Connection to Three-Phase Supply

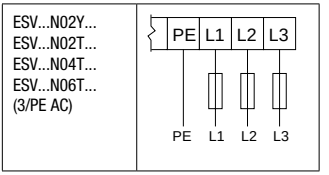

3.2.1.4 Motor Connection

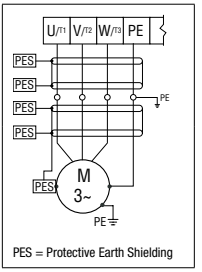

WARNING!
If the cable connection between the drive and the motor has an in-line contactor or circuit breaker then the drive must be stopped prior to opening/closing the contacts. Failure to do so may result in Overcurrent trips and/or damage to the inverter.

WARNING!
Leakage current may exceed 3.5 mA AC. The minimum size of the protective earth (PE) conductor shall comply with local safety regulations for high leakage current equipment.

STOP!
In the case of a Spinning Motor:

To bring free-wheeling loads such as fans to a rest before starting the drive, use the DC injection braking function. Starting a drive into a freewheeling motor creates a direct short-circuit and may result in damage to the drive.

Confirm motor suitability for use with DC injection braking.
Consult parameter P110 for starting / restarting into spinning motors.

3.2.1.5 Installation Recommendations for EMC Compliance

For compliance with EN 61800-3 or other EMC standards, motor cables, line cables and control or communications cables must be shielded with each shield/screen clamped to the drive chassis. This clamp is typically located at the conduit mounting plate.

The EMC requirements apply to the final installation in its entirety, not to the individual components used. Because every installation is different, the recommended installation should follow these guidelines as a minimum. Additional equipment (such as ferrite core absorbers on power conductors) or alternative practices may be required to meet conformance in some installations.

Motor cable should be low capacitance (core/core <75pF/m, core/shield <150pF/m). Filtered drives can meet the class A limits of EN 55011 and EN 61800-3 Category 2 with this type of motor cable up to 10 meters.

NOTE: Refer to Appendix A for recommended cable lengths. Any external line filter should have its chassis connected to the drive chassis by mounting hardware or with the shortest possible wire or braid.

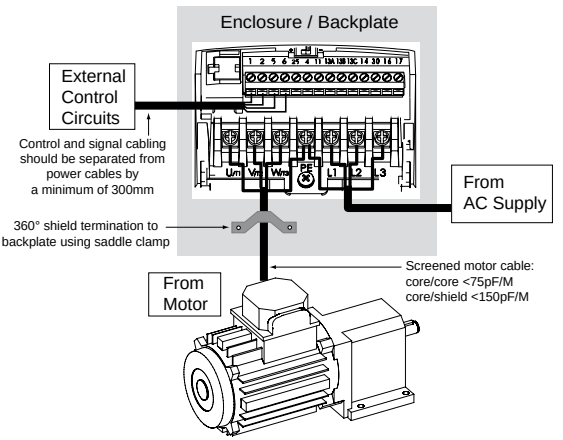

3.2.1.6 NEMA 4X (IP65) Input Terminal Block

For NEMA 4X (IP65) models with integrated EMC filter and/or integrated line disconnect, the input terminal block is located on the right-hand side of the SMV inverter in the NEMA 4 X (IP65) enclosure. The single and three phase models are illustrated herein. Refer to paragraph 3.2.3 Control Terminals for pin out information.

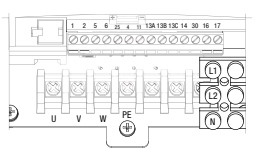

Single Phase (2/PE) 120/240 VAC models (ESVxxxN01SMC) with integrated line disconnect

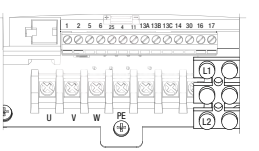

Single Phase (2/PE) 240 VAC models with Filter and/or integrated line disconnect

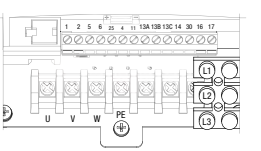

Three Phase (3/PE) models with Filter and/or integrated line disconnect

WARNING
Power remains present for up to 3 minutes on power input terminals (L1, L2 and L3) and output terminals (U, V and W) even when the disconnect switch is in the OFF position. Remove input power ahead of the drive and wait 3 minutes before removing the terminal cover.

3.2.1.7 Dynamic Brake Connections

For NEMA 1 and NEMA 4X Drives rated up to 30HP (22kW) the Dynamic Brake connections are made as illustrated herein. Refer to the SMV Dynamic Brake Instructions (DBV01) for complete information.

NEMA 1 (IP31) up to 30HP (22kW)	NEMA 4X (IP65) up to 30HP (22kW)
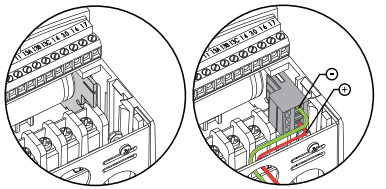	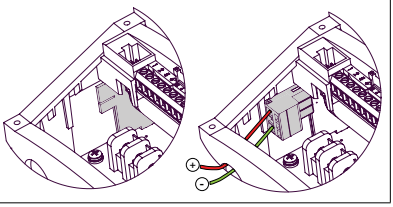

The SMV 40...60Hp (30...45kW) models include a dynamic brake transistor as standard and only require the connection of an external resistor kit for dynamic braking operation. The dynamic brake resistor connections for 40...60 Hp (30...45kW) drives are standard built-in connections as illustrated in the diagram below. In the 40Hp (30kW) model drives, the dynamic brake connector is on the right-hand side of the drive and the terminals from top to bottom are B-, BRAKE and B+. In the 50/60HP (37.5/45 kW) model drives, the dynamic brake connector is on the left-hand side of the drive and the terminals from top to bottom are B+, BRAKE and B-.

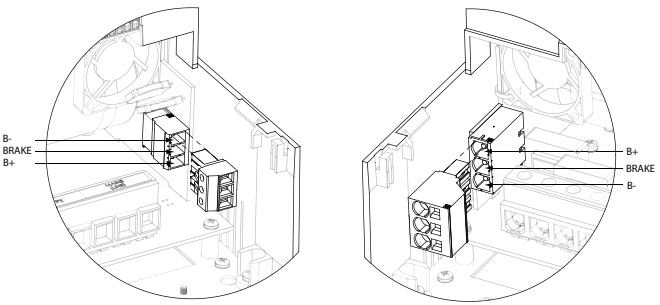

40HP (30kW) 50/60HP (37.5/45kW)

External resistor kits must be connected to terminals B+ and BRAKE (no connection to B-). Refer to the table herein for external resistor kit selection. Refer to parameter P189 for enabling the dynamic brake function in the 40...60Hp (30...45kW) models.

400/480 VAC SMV Inverter			Resistor Kit			
Type	**Hp**	**kW**	**Resistance (Ω)**	**Power (W)**	**Catalog #**	**SAP#**
ESV303**4T**	40	30	23.5	1020	841-013	13317724
ESV373**4T**	50	37	17	1400	841-015	13317626
ESV453**4T**	60	45	17	1400	841-015	13317626
600 VAC SMV Inverter			**Resistor Kit**			
Type	**Hp**	**kW**	**Resistance (Ω)**	**Power (W)**	**Catalog #**	**SAP#**
ESV303**6T**	40	30	35	1070	841-014	13317624
ESV373**6T**	50	37	24	1560	841-016	13317628
ESV453**6T**	60	45	24	1560	841-016	13317628

3.2.2 Fuses/Cable Cross-Sections

NOTE: Observe local regulations. Local codes may supersede these recommendations

Type		Recommendations				
		Fuse	Miniature circuit breaker[1]	Fuse[2] or Breaker[3] (N. America)	Input Power Wiring (L1, L2, L3, PE)	
					[mm²]	[AWG]
120V 1~ (1/N/PE)	ESV251N01SXB	M10 A	C10 A	10 A	1.5	14
	ESV371N01SXB, ESV371N01SX*	M16 A	C16 A	15 A	2.5	14
	ESV751N01SXB, ESV751N01SX*	M25 A	C25 A	25 A	4	10
	ESV112N01SXB, ESV112N01SX*	M32 A	C32 A	30A	4	10
240V 1~ (2/PE)	ESV251N01SXB, ESV251N02SXB, ESV371N01SXB, ESV371N02YXB, ESV371N02SF*	M10 A	C10 A	10 A	1.5	14
	ESV751N01SXB, ESV751N02YXB, ESV751N02SF*	M16 A	C16 A	15 A	2.5	14
	ESV112N02YXB, ESV112N02SFC, ESV112N01SXB ESV112N01SX*	M20 A	C20 A	20 A	2.5	12
	ESV152N02YXB, ESV152N02SF*	M25 A	C25 A	25 A	2.5	12
	ESV222N02YXB, ESV222N02SF*	M32 A	C32A	30 A	4	10
240V 3~ (3/PE)	ESV371N02YXB, ESV751N02YXB, ESV371N02Y_*, ESV751N02Y_*	M10 A	C10 A	10 A	1.5	14
	ESV112N02YXB, ESV152N02YXB, ESV112N02TXB, ESV152N02TXB, ESV112N02Y_*, ESV152N02Y_*	M16 A	C16 A	12 A	1.5	14
	ESV222N02YXB, ESV222N02TXB, ESV222N02YX*	M20 A	C20 A	20 A	2.5	12
	ESV402N02TXB, ESV402N02T_*	M32 A	C32 A	30 A	4.0	10
	ESV552N02TXB, ESV552N02T_~	M40 A	C40 A	35 A	6.0	8
	ESV752N02TXB, ESV752N02T_~	M50 A	C50 A	45 A	10	8
	ESV113N02TXB, ESV113N02TX~, ESV113N02TM~	M80 A	C80 A	80 A	16	6
	ESV153N02TXB, ESV153N02TX~, ESV153N02TM~	M100 A	C100 A	90 A	16	4
400V or 480V 3~(3/PE)	ESV371N04TXB ...ESV222N04TXB ESV371N04T_* ...ESV222N04T_* ESV371N04TF* ...ESV222N04TF*	M10 A	C10 A	10 A	1.5	14
	ESV302N04T_*	M16 A	C16 A	15 A	2.5	14
	ESV402N04TXB, ESV402N04T_*	M16 A	C16 A	20 A	2.5	14
	ESV552N04TXB, ESV552N04T_*	M20 A	C20 A	20 A	2.5	14
	ESV752N04TXB, ESV752N04T_~	M25 A	C25 A	25 A	4.0	10
400V or 480V 3~(3/PE)	ESV113N04TXB, ESV113N04T_~	M40 A	C40 A	40 A	4	8
	ESV153N04TXB, ESV153N04T_~	M50 A	C50 A	50 A	10	8
	ESV183N04TXB, ESV183N04T_~	M63 A	C63A	70 A	10	6
	ESV223N04TXB, ESV223N04T_~	M80 A	C80 A	80 A	16	6
	ESV303N04TXB	M100 A	C100 A	100 A	25	4
	ESV373N04TXB	M125 A	C125 A	125 A	35	2
	ESV453N04TXB	M160 A	C160 A	150 A	35	1
600V 3~(3/PE)	ESV751N06TXB ...ESV222N06TXB ESV751N06T_* ...ESV222N06T_*	M10 A	C10 A	10 A	1.5	14
	ESV402N06TXB, ESV402N06T_*	M16 A	C16 A	12 A	1.5	14
	ESV552N06TXB, ESV552N06T_*	M16 A	C16 A	15 A	2.5	14
	ESV752N06TXB, ESV752N06T_~	M20 A	C20 A	20 A	2.5	12
	ESV113N06TXB, ESV113N06TX~, ESV113N06TM~	M32 A	C32 A	30 A	4	10
	ESV153N06TXB, ESV153N06TX~, ESV153N06TM~	M40 A	C40 A	40 A	4	8
	ESV183N06TXB, ESV183N06TX~, ESV183N06TM~	M50 A	C50 A	50 A	6	8
	ESV223N06TXB, ESV223N06TX~, ESV223N06TM~	M63 A	C63 A	60 A	10	8
	ESV303N06TXB	M80 A	C80 A	70 A	16	6
	ESV373N06TXB	M100 A	C100 A	90 A	16	4
	ESV453N06TXB	M125 A	C125 A	110 A	25	2

Notes for Fuse and Cable Table:

(1) Installations with high fault current due to large supply mains may require a type D circuit breaker.
(2) UL Class CC or T fast-acting current-limiting type fuses, 200,000 AIC, preferred. Bussman KTK-R, JJN or JJS or equivalent.
(3) Thermomagnetic type breakers preferred.

_ 11th digit of part number:	F = Integral EMC Filter
	L = Integral EMC Filter and Integrated Disconnect Switch (NEMA 4X/IP65 Models only)
	M = Integrated Disconnect Switch (NEMA 4X/IP65 Models only)
	X = No EMC Filter/ No Disconnect Switch
* = Last digit of part number:	C = N4X Indoor only (convection cooled)
	E = N4X Indoor/Outdoor (convection cooled)
~ = Last digit of part number:	D = N4X Indoor only (fan cooled)
	F = N4X Indoor/Outdoor (fan cooled)

Observe the following when using Ground Fault Circuit Interrupters (GFCIs):

- Installation of GFCI only between supplying mains and controller.
- The GFCI can be activated by:
  - capacitive leakage currents between the cable screens during operation (especially with long, screened motor cables)
  - connecting several controllers to the mains at the same time
  - RFI filters

3.2.3 Control Terminals

Control Terminal Strip for 0.33 - 10 HP (0.25 - 7.5 kW):

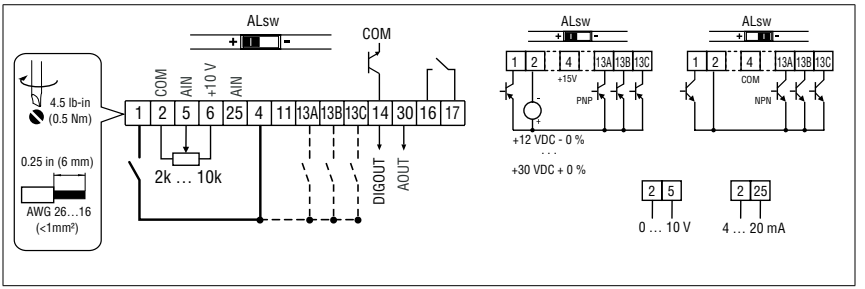

Control Terminal Strip for 15HP (11 kW) and Greater Drives:

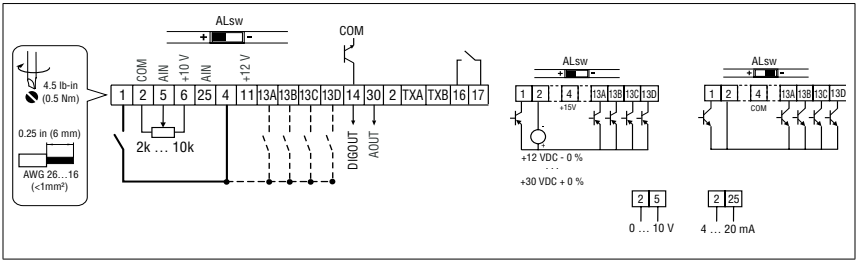

NOTE
Control and communications terminals provide basic insulation when the drive is connected to a power system rated up to 300V between phase to ground (PE) and the applied voltage on terminals 16 and 17 is less than 250 VAC between phase to phase and ground (PE).

Control Terminal Strip Descriptions

Terminal	Description	Important
1	Digital Input: Start/Stop	input resistance = 4.3kΩ
2	Analog Common	
5	Analog Input: 0...10 VDC	input resistance: >50 kΩ
6	Internal DC supply for speed pot	+10 VDC, max. 10 mA
25	Analog Input: 4...20 mA	input resistance: 250Ω
4	Digital Reference/Common	+15 VDC / 0 VDC, depending on assertion level
11	Internal DC supply for external devices	+12 VDC, max. 50 mA
13A	Digital Input: Configurable with P121	input resistance = 4.3kΩ
13B	Digital Input: Configurable with P122	
13C	Digital Input: Configurable with P123	
13D*	Digital Input: Configurable with P124	
14	Digital Output: Configurable with P142, P144	DC 24 V / 50 mA; NPN
30	Analog Output: Configurable with P150…P155	0…10 VDC, max. 20 mA
2*	Analog Common	
TXA*	RS485 TxA	
TXB*	RS485 TxB	
16	Relay output: Configurable with P140, P144	AC 250 V / 3 A DC 24 V / 2 A … 240 V / 0.22 A, non-inductive
17		

***** = Terminal is part of the terminal strip for the 15HP (11kW) and higher models only.

Assertion level of digital inputs

The digital inputs can be configured for active-high or active-low by setting the Assertion Level Switch (ALsw) and P120. If wiring to the drive inputs with dry contacts or with PNP solid state switches, set the switch and P120 to “High” (+). If using NPN devices for inputs, set both to “Low” (-). Active-high (+) is the default setting.

HIGH = +12 … +30 V
LOW = 0 … +3 V

NOTE
An **F_AL** fault will occur if the Assertion Level switch (ALsw) position does not match the parameter P120 setting and P100 or any of the digital inputs (P121...P124) is set to a value other than 0.

4 Commissioning

4.1 Local Keypad & Display

SMV Models: 0.33-10HP (0.25-7.5kW)	SMV Models: 15HP (11kW) and greater
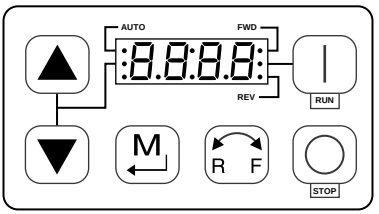	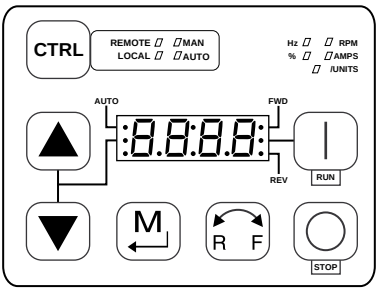
4-Character Display	4-Character plus CTRL Display

Display	START BUTTON
	In Local Mode (P100 = 0, 4, 6), this button will start the drive.
	STOP BUTTON
	Stops the drive, regardless of which mode the drive is in. ⚠ **WARNING!** When JOG is active, the STOP button will not stop the drive!
	ROTATION
	In Local Mode (P100 = 0, 4, 6), this selects the motor rotation direction: - The LED for the present rotation direction (FWD or REV) will be on - Press R/F; the LED for the opposite rotation direction will blink - Press M within 4 seconds to confirm the change - The blinking direction LED will turn on, and the other LED will turn off When rotation direction is changed while the drive is running, the commanded direction LED will blink until the drive is controlling the motor in the selected direction. Rotation is set in P112. When P112 = 0, rotation is forward only. When P112 = 1 rotation is forward and reverse.
	MODE
	Used to enter/exit the Parameter Menu when programming the drive and to enter a changed parameter value.
	UP AND DOWN BUTTONS
	Used for programming and can also be used as a reference for speed, PID setpoint, or torque setpoint. When the ▲ and ▼ buttons are the active reference, the middle LED on the left side of the display will be on.

Display	INDICATING LEDs (on 4-character display)
	FWD LED: Indicate the present rotation direction is forward. Refer to ROTATION description above.
	REV LED: Indicate the present rotation direction is reverse. Refer to ROTATION description above.
	AUTO LED: Indicates that the drive has been put into Auto mode from one of the TB13 inputs (P121…P124 set to 1…7). Indicates that PID mode is active (if PID mode is enabled). Indicates that sequencer mode is active (if sequencer mode is enabled).
	RUN LED: Indicates that the drive is running.
	▲ ▼ LED: Indicates that the ▲ ▼ are the active reference.
	NOTE If the keypad is selected as the auto reference (P121…P124 is 6) and the corresponding TB-13 input is closed, the AUTO LED and ▲ ▼ LEDs will both be on.
	FUNCTIONS THAT FOLLOW ARE APPLICABLE TO SMV DRIVES 15HP (11kW) AND HIGHER
CTRL	**CTRL** The CTRL pushbutton selects the start and speed reference control sources for the drive. Press [M] mode button to accept the new control mode selection.

CTRL LEDs		START CONTROL	REFERENCE CONTROL
REMOTE ☐ ■ MAN LOCAL ■ ☐ AUTO	[LOCAL] [MAN]	Keypad	P101 Settings
REMOTE ☐ ☐ MAN LOCAL ■ ■ AUTO	[LOCAL] [AUTO]	Keypad	Terminal 13x Settings
REMOTE ■ ■ MAN LOCAL ☐ ☐ AUTO	[REMOTE] [MAN]	Terminal Strip	P101 Settings
REMOTE ■ ☐ MAN LOCAL ☐ ■ AUTO	[REMOTE] [AUTO]	Terminal Strip	Terminal 13x Settings

If P100 = 6 the CTRL button is used to toggle start control between the terminal strip [REMOTE] and the keypad [LOCAL]	- REM/LOC LED indicating the present start control source is ON - Press [CTRL]; the LED for other start control source will blink - Press [M] within 4 sec to confirm the change - Blinking LED will turn ON (the other LED will turn OFF)
If P113 = 1 the CTRL button is used to toggle reference control between the TB-13x setup [AUTO] and P101 [MANUAL]	- AUT/MAN LED indicating present reference control is ON - Press [CTRL]; the other reference control will blink - Press [M] within 4 sec to confirm change - Blinking LED will turn ON (the other LED will turn OFF)
If P100 = 6 and P113 = 1, it is possible to change the start and reference control sources at the same time	

Display	START CONTROL	
	The REMOTE/LOCAL LEDs indicate the current start control source. If the start control source is a remote keypad or the network, then both LEDs will be OFF.	
	REFERENCE CONTROL	
	The AUTO/MANUAL LEDs indicate the current reference control source.	
	IF P113 = 0 or 2, the AUTO/MANUAL LEDs will match the AUTO LED on the 4-character display. IF P113 = 0 and no AUTO reference has been setup on the terminal strip, the MANUAL LED will turn ON and the AUTO LED will turn OFF.	
	IF P113 = 1, the AUTO/MANUAL LEDS show the commanded reference control source as selected by the [CTRL] button. If the [CTRL] button is used to set the reference control source to AUTO but no AUTO reference has been setup on the terminal strip, reference control will follow P101 but the AUTO LED will remain ON.	
	UNITS LEDs	
	HZ: current display value is in Hz	In Speed mode, if P178 = 0 then HZ LED will be ON. If P178 > 0, the Units LEDs follow the setting of P177 when the drive is in run (non-programming) mode. In Torque mode, the HZ LED will be ON when the drive is in run (non-programming) mode. In Pid mode, the Units LEDs follow the setting of P203 when the drive is in run (non-programming) mode. If P179 > 0, the Units LEDs will show the unit of the diagnostic parameter that is being displayed.
	%: current display value is in %	
	RPM: current display value is in RPM	
	AMPS: current display value is in Amps	
	/UNITS current display value is a per unit (i.e./sec, /min, /hr, etc.)	

4.2 Drive Display and Modes of Operation

Speed Mode Display
In the standard mode of operation, the drive frequency output is set directly by the selected reference (keypad, analog reference, etc.). In this mode, the drive display will show the drive's output frequency.

PID Mode Display
When the PID mode is enabled and active, the normal run display shows the actual PID setpoint. When PID mode is not active, the display returns to showing the drive's output frequency.

Torque Mode Display
When the drive is operating in Vector Torque mode, the normal run display shows the drive's output frequency.

Alternate (Run-Screen) Display
When P179 (Run Screen Display) is set to a value other than 0, one of the diagnostic parameters (P501…P599) is displayed. Example: if P179 is set to 1, then diagnostic parameter P501 (Software version) is displayed. If P179 =2, then P502 (Drive ID) is displayed.

4.3 Parameter Setting

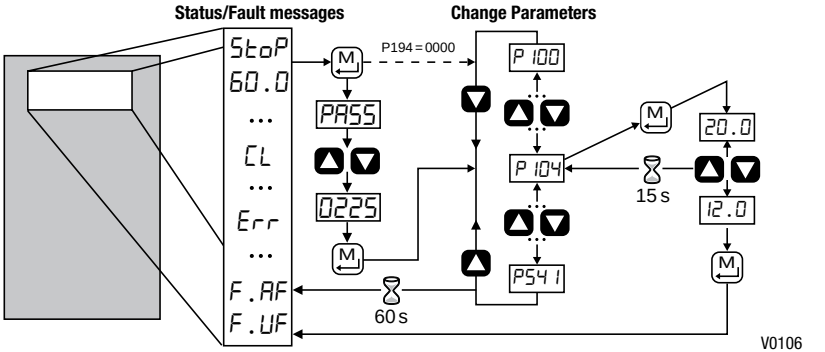

4.4 Electronic Programming Module (EPM)

The EPM contains the drives operational memory. Parameter settings are stored in the EPM and setting changes are made to the "User settings" in the EPM.

An optional EPM Programmer (model EEPM1RA) is available that allows:

- An EPM to be copied directly to another EPM.
- An EPM to be copied to the memory of the EPM Programmer.
- Stored files can be modified in the EPM Programmer.
- Stored files can be copied to another EPM.

EPM Module in SMV Drive

As the EPM Programmer is battery operated, parameter settings can be copied to an EPM and inserted into a drive without power being applied to the drive. This means that the drive will be fully operational with the new settings on the next application of power.

Additionally, when the drives parameter settings are burned into an EPM with the EPM Programmer, the settings are saved in two distinct locations; the "User settings" and the "OEM default settings". While the User settings can be modified in the drive, the OEM settings cannot. Thus, the drive can be reset not only to the "factory" drive default settings (shown in this manual), but can be set to the Original Machine settings as programmed by the OEM.

The user area contents of the EPM are what are copied into the OEM space by the EPM programmer. When parameter modifications are made to the drive and then a copy made via the EPM Programmer, these are the settings that will be available by the OEM selections from P199. The EPM Programmer is the only way to load the OEM area of the EPM.

While the EPM can be removed for copying or to use in another drive, it must be installed for the drive to operate (a missing EPM will trigger an **F_F I** fault)

4.5 Parameter Menu

4.5.1 Basic Setup Parameters

Code		Possible Settings		IMPORTANT
No.	Name	Default	Selection	
P 100	Start Control Source	0	0 Local Keypad	Use RUN button on front of drive to start
			1 Terminal Strip	Use start/stop circuit wired into the terminal strip. Refer to section 3.2.3
			2 Remote Keypad Only	Use RUN button on optional Remote Keypad to start
			3 Network Only	• Start command must come from network (Modbus, CANopen, etc) • SMV models <15HP (11kW) require optional communication module (refer to the network module documentation). • Must also set one of the TB-13 inputs to 9 (Network Enable); see P121...P124
			4 Terminal Strip or Local Keypad	Allows start control to be switched between terminal strip and local keypad using one of the TB-13 inputs. See note below.
			5 Terminal Strip or Remote Keypad	Allows start control to be switched between terminal strip and optional remote keypad using one of the TB-13 inputs. See Note below
			6 CTRL button select	Allows start control to be switched between terminal strip and local keypad using the CTRL button. **NOTE:** P100 Selection 6 is applicable to SMV 15HP (11kW) and higher models only.
		⚠	**WARNING!** P100 = 0 disables TB-1 as a STOP input! STOP circuitry may be disabled if parameters are reset back to defaults (see P199)	
		ℹ	**NOTE** • P100 = 4, 5: To switch between control sources, one of the TB-13 inputs (P121...P124) must be set to 08 (Control Select); TB-13x OPEN (or not configured): Terminal strip control TB-13x CLOSED: Local (P100 = 4) or Remote (P100 = 5) keypad • P100 = 0, 1, 4, 6: Network can take control if P121...P124 = 9 and the corresponding TB-13x input is CLOSED. • The STOP button on the front of the drive is always active except in JOG mode. • TB-1 is an active STOP input if P100 is set to a value other than 0. • An F_AL fault will occur if the Assertion Level switch (ALsw) position does not match the P120 setting and P100 is set to a value other than 0.	
P 101	Standard Reference Source	0	0 Keypad (Local or Remote)	Selects the default speed or torque reference when no Auto Reference is selected using the TB-13 inputs.
			1 0-10 VDC	
			2 4-20 mA	
			3 Preset #1 (P131)	
			4 Preset #2 (P132)	
			5 Preset #3 (P133)	
			6 Network	
			7 Preset Sequence Segment #1 (P710)	Selections 7, 8 & 9 are not valid for PID setpoint or torque reference.
			8 Preset Sequence Segment #2 (P715)	
			9 Preset Sequence Segment #3 (P720)	

Code		Possible Settings				IMPORTANT
No.	Name	Default	Selection			
P 102	Minimum Frequency	0.0	0.0	{Hz}	P103	• P102, P103 are active for all speed references • When using an analog speed reference, also see P160, P161
P 103	Maximum Frequency	60.0	7.5	{Hz}	500	
			NOTE • P103 cannot be set below Minimum Frequency (P102) • To set P103 above 120 Hz: - Scroll up to 120 Hz; display shows H iFr (flashing). - Release ▽ button and wait one second. - Press ▽ button again to continue increasing P103.			
	WARNING! Consult motor/machine manufacturer before operating above rated frequency. Overspeeding the motor/machine may cause damage to equipment and injury to personnel!					
P 104	Acceleration Time 1	20.0	0.0	{s}	3600	• P104 = time of frequency change from 0 Hz to P167 (base frequency) • P105 = time of frequency change from P167 to 0 Hz • For S-ramp accel/decel, adjust P106
P 105	Deceleration Time 1	20.0	0.0	{s}	3600	
	EXAMPLE: IF P103 = 120 Hz, P104 = 20.0 s and P167 (base frequency) = 60 Hz; then the rate of frequency change from 0 Hz to 120 Hz = 40.0 s					
P 106	S-Ramp Integration Time	0.0	0.0	{s}	50.0	• P106 = 0.0: Linear accel/decel ramp • P106 > 0.0: Adjusts S-ramp curve for smoother ramp
P 107(1)	Line Voltage Selection	1*	0 Low (120, 200, 400, 480VAC) 1 High (120, 240, 480, 600VAC)			* The default setting is 1 for all drives except when using "Reset to 50Hz default settings" (Parameter P199, selection 4) with 480V models. In this case, the default setting is 0.
P 108	Motor Overload	100	30	{%}	100	P108 = motor current rating x 100 SMV output rating Example: if motor = 3amps and SMV = 4amps, then P108 = 75%
			NOTE Do not set above rated motor current as listed on the motor dataplate. The motor thermal overload function of the SMV is UL approved as a motor protection device. Cycling power after an overload fault could result in significantly reducing the motor life.			
P 109	Motor Overload Type	0	0 Speed Compensation 1 No Speed Compensation Example: Motor is cooled by forced ventilation as apposed to shaft mounted, self cooling fans.			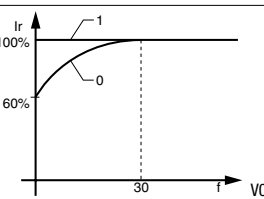

(1) Any changes to this parameter will not take effect until the drive is stopped.

Code		Possible Settings		IMPORTANT
No.	Name	Default	Selection	
P110	Start Method	0	0 Normal	
			1 Start on Power-up	Drive will automatically start when power is applied.
			2 Start with DC Brake	When start command is applied, drive will apply DC braking according to P174, P175 prior to starting the motor
			3 Auto Restart	Drive will automatically restart after faults, or when power is applied.
			4 Auto Restart with DC Brake	Combines settings 2 and 3
			5 Flying Start/Restart - Type 1	• Drive will automatically restart after faults, or when power is applied. • After 3 failed attempts, drive will Auto Restart with DC brake. • P110 = 5, 7: Performs speed search, starting at Max Frequency (P103) • P110 = 6, 8: Performs speed search, starting at the last output frequency prior to faulting or power loss • If P111 = 0, a flying START is performed when a start command is applied. • P110 = 7,8: Utilizes P280/281 to set Max Current Level and Decel Time for restart
			6 Flying Start/Restart - Type 1	
			7 Flying Start /Restart - Type 2 for 2-pole motors requiring a flying restart	
			8 Flying Start/Restart - Type 2 for 2-pole motors requiring a flying restart	
			NOTE • P110 = 0, 2: Start command must be applied at least 2 seconds after power-up; F_UF fault will occur if start command is applied too soon. • P110 = 1, 3…6: For automatic start/restart, the start source must be the terminal strip and the start command must be present. • P110 = 2, 4…6: If P175=999.9, dc braking will be applied for 15s. • P110 = 3…6: Drive will attempt 5 restarts; if all restart attempts fail, drive displays LC (fault lockout) and requires manual reset. • P110 = 5, 6: If drive cannot catch the spinning motor, drive will trip into F_rF fault. • P110 = 5, 6: If drive trips into F_OF fault, try P110 = 7 or 8.	
	WARNING! Automatic starting/restarting may cause damage to equipment and/or injury to personnel! Automatic starting/restarting should only be used on equipment that is inaccessible to personnel.			
P111	Stop Method	0	0 Coast	Drive's output will shut off immediately upon a stop command, allowing the motor to coast to a stop
			1 Coast with DC Brake	The drive's output will shut off and then the DC Brake will activate (refer to P174, P175)
			2 Ramp	The drive will ramp the motor to a stop according to P105 or P126.
			3 Ramp with DC Brake	The drive will ramp the motor to 0 Hz and then the DC Brake will activate (refer to P174, P175)
P112	Rotation	0	0 Forward Only	If PID mode is enabled, reverse direction is disabled (except for Jog).
			1 Forward and Reverse	

Code		Possible Settings		IMPORTANT
No.	Name	Default	Selection	
P113	Auto/Manual Control	0	0 Terminal Strip Control	The reference is dictated by the settings and state of the TB-13x terminals. If no AUTO reference has been setup on the terminal strip then reference control is dictated by P101.
			1 Auto/Manual (CTRL button select)	Allows the reference to be switched between auto and manual using the CTRL pushbutton on the drive keypad. If the CTRL pushbutton has selected AUTO reference but no AUTO reference has been setup on the terminal strip, then reference control is dictated by P101.
			2 Manual Control Only	Reference is dictated by P101 regardless of any AUTO source that may be selected by the TB-13x terminals.
		ℹ	**NOTE** P113 is applicable to SMV 15HP (11kW) and higher models only.	
P115	MOP Speed Initialization at Power-Up	0	0 Set to last MOP speed at power up	Output frequency at power-up = last MOP speed
			1 Set to 0.0Hz at power up	Output frequency at power-up = 0Hz
			2 Set to Preset #3 (P133) at power up	Output frequency at power-up = P133

4.5.2 I/O Setup Parameters

Code		Possible Settings		IMPORTANT
No.	Name	Default	Selection	
P 120	Assertion Level	2	1 Low 2 High	P120 and the Assertion Level switch must both match the desired assertion level unless P100, P121…P124 are all set to 0. Otherwise an F.AL fault will occur.
P 121 P 122 P 123 P 124	TB-13A Digital Input TB-13B Digital Input (Priority > TB13A) Same as TB13A except: 3 = Preset #2 23 = Seq Seg, #2 TB-13C Digital Input (Priority > TB13B, A) Same as TB13A except: 3 = Preset #3 23 = Seq Seg, #4 TB-13D* Digital Input (Priority > TB13C, B, A) Same as TB13A except: 3 = Preset #4 23 = Seq Seg, #8 **NOTE: P124** is applicable to SMV 15HP (11kW) and higher models only	0	0 None	Disables input
			1 AUTO Reference: 0-10 VDC	For frequency mode, see P160...P161, For PID mode, see P204…P205, For vector torque mode, see P330
			2 AUTO Reference: 4-20 mA	
			3 AUTO Reference: Preset #1 * 13D: 3 = Reserved	For frequency mode see P131...P137, For PID mode, see P231…P233, For torque mode see, P331…P333
			4 AUTO Reference: MOP Up	• Normally open: Close input to increase or decrease speed, PID or torque setpoint. • MOP Up is not active while in STOP
			5 AUTO Reference: MOP Down	
			6 AUTO Reference: Keypad	
			7 AUTO Reference: Network	
			8 Control Select	Use when P100 = 4, 5 to switch between terminal strip control and local or remote keypad control.
			9 Network Enable	Required to start the drive through the network.
			10 Reverse Rotation	Open = Forward Closed = Reverse
			11 Start Forward	Refer to Note for typical circuit
			12 Start Reverse	
			13 Run Forward	Refer to Note for typical circuit
			14 Run Reverse	
			15 Jog Forward	Jog Forward speed = P134
			16 Jog Reverse	Jog Reverse speed = P135 ⚠ Active even if P112 = 0
			17 Accel/Decel #2	Refer to P125, P126
			18 DC Brake	Refer to P174; close input to override P175
			19 Auxiliary Ramp to Stop	Normally closed: Opening input will ramp drive to STOP according to P127, even if P111 is set to Coast (0 or 1).
			20 Clear Fault	Close to reset fault
			21 External Fault F_EF	Normally closed circuit; open to trip
			22 Inverse External Fault F_EF	Normally open circuit; close to trip
			23 AUTO Ref: Sequence Segment #1	Works in Speed Mode only
			24 Start Sequence	
			25 Step Sequence	Transition from non-asserted to asserted state
			26 Suspend Sequence	

⚠ **WARNING**
Jog overrides all STOP commands! To stop the drive while in Jog mode, the Jog input must be deactivated or a fault condition induced.

⚠ **WARNING**
If the input defined to "Start Sequence" is opened during a sequence, the drive will exit sequencer mode and will run at the specified standard or alternate speed source (dependent on drive configuration).

Code		Possible Settings				IMPORTANT
No.	Name	Default	Selection			
	NOTE • When input is activated, settings 1...7 override P101 • When TB-13A...TB-13D are configured for Auto References other than MOP, TB-13D overrides TB-13C, TB-13C overrides TB-13B and TB-13B overrides TB-13A. Any other Auto Reference will have priority over MOP. • Settings 10...14 are only valid in Terminal Strip mode (P100 = 1, 4, 5, 6) • If Start/Run/Jog Forward and Start/Run/Jog Reverse are both activated, drive will STOP • If Jog input is activated while drive is running, the drive will enter Jog mode; when Jog input is deactivated, drive will STOP • An **F_AL** fault will occur if the Assertion Level switch (ALsw) position does not match the P120 setting and any of the digital inputs (P121...P124) are set to a value other than 0. • An **F_IL** fault will occur under the following conditions: - TB-13A...TB-13D settings are duplicated (each setting, except 0, 3 and 23, can only be used once) - One input is set to "MOP Up" and another is not set to "MOP Down", or vice-versa. - One input is set to 10 and another input is set to 11…14. - One input is set to 11 or 12 and another input is set for 13 or 14. • Typical control circuits are shown below: - If any input is set to 10, 12 or 14, P112 must be set to 1 for Reverse action to function. Run / Stop with Direction P121 = 10 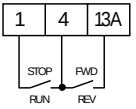 Start Forward / Start Reverse P121 = 11, P122 = 12 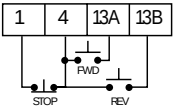 Run Forward / Run Reverse P121 = 13, P122 = 14 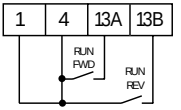 					
P125	Acceleration Time 2	20.0	0.0	{s}	3600	• Selected using TB-13A...TB-13D (P121... P124 = 17) • For S-ramp accel/decel, adjust P106
P126	Deceleration Time 2	20.0	0.0	{s}	3600	
P127	Deceleration Time for Auxiliary Ramp to Stop	20.0	0.0	{s}	3600	• Selected using TB-13A...TB-13D (P121... P124 = 19). • For S-ramp accel/decel, adjust P106 • Once executed, this ramp time has priority over P105 and P126.
P129	Automatic Accel/ Decel rate switch threshold	0.0	0.0	{Hz}	1000	If Actual Frequency < P129 Use Accel/decel time #2 (P125/P126) If Actual Frequency > P129 Use Accel/decel time #1 (P104/P105)
P131	Preset Speed #1	0.0	0.0	{Hz}	500	PRESET SPEED / 13A / 13B / 13C / 13D 1 / X / -- / -- / -- 2 / -- / X / -- / -- 3 / -- / -- / X / -- 4 / X / X / -- / -- 4 (alternate) / -- / -- / -- / X 5 / X / -- / X / -- 6 / -- / X / X / -- 7 / X / X / X / -- 8 (alternate) / -- / X / -- / X 8 (alternate / -- / -- / X / X • Speed setting is used by P158 • 13D available on 15HP (11kW) & higher drives.
P132	Preset Speed #2	0.0	0.0	{Hz}	500	
P133	Preset Speed #3	0.0	0.0	{Hz}	500	
P134	Preset Speed #4	0.0	0.0	{Hz}	500	
P135	Preset Speed #5	0.0	0.0	{Hz}	500	
P136	Preset Speed #6	0.0	0.0	{Hz}	500	
P137	Preset Speed #7	0.0	0.0	{Hz}	500	
P138	Preset Speed #8	0.0	0.0	{Hz}	500	

Code		Possible Settings		IMPORTANT
No.	Name	Default	Selection	
P140	Relay Output TB-16, 17	0	0 None	Disables the output
			1 Run	Energizes when the drive is running
			2 Reverse	Energizes when reverse rotation is active
			3 Fault	De-energizes when the drive trips, or power is removed
			4 Inverse Fault	Energizes when the drive trips
			5 Fault Lockout	P110 = 3...6: De-energizes if all restart attempts fail
			6 At Speed	Energizes when output frequency = commanded frequency
			7 Above Preset Speed #6	Energizes when output frequency > P136
			8 Current Limit	Energizes when motor current = P171
			9 Follower Loss (4-20 mA)	Energizes when 4-20 mA signal is < P164
			10 Loss of Load	Energizes when motor load drops below P145; Refer to P146 also
			11 Local Keypad Control Active	Energizes when the selected source is active for start control
			12 Terminal Strip Control Active	
			13 Remote Keypad Control Active	
			14 Network Control Active	
			15 Standard Reference Active	Energizes when P101 reference is active
			16 Auto Reference Active	Energizes when Auto Reference is activated using TB-13 input; refer to P121...P124
			17 Sleep Mode Active	Refer to P240...P242
			18 PID Feedback < Min. Alarm	Energizes when PID feedback signal < P214
			19 Inverse PID Feedback < Min. Alarm	De-energizes when PID feedback signal < P214
			20 PID Feedback > Max Alarm	Energizes when PID feedback signal > P215
			21 Inverse PID Feedback > Max Alarm	De-energizes when PID feedback signal > P215
			22 PID Feedback within Min/Max Alarm range	Energizes when PID feedback signal is within the Min/Max Alarm range; refer to P214, P215
			23 PID Feedback outside Min/Max Alarm range	Energizes when PID feedback signal is outside the Min/Max Alarm range; refer to P214, P215
			24 Reserved	
			25 Network Controlled	SMV models < 15HP (11kW) require an optional communication module (refer to the network module documentation).
			26 Loss of 0-10V Input	Energizes when 0-10V signal is < P158
			27 Sequencer Controlled	State set in individual sequencer segments
			28 Sequencer Active	
			29 Sequencer Suspended	
			30 Sequence Done	End Sequence
			31 Output Frequency = 0.0Hz	Output inactive
P142	TB-14 Output	0	0...23 (same as P140)	
			24 Dynamic Braking	For use with Dynamic Braking option
			25...31 (same as P140)	

Code		Possible Settings				IMPORTANT
No.	Name	Default	Selection			
P144	Digital Output Inversion		P144 / Invert P142 / Invert P140 0 / NO / NO 1 / NO / YES 2 / YES / NO 3 / YES / YES			Used to invert the selections for P140 (Relay Output) and P142 (TB-14 Output). EXAMPLE: When P140 = 6 (AT SPEED), the relay is energized when output frequency = commanded frequency. IF P144=1 or 3, then P140 is inverted (INVERSE AT SPEED) and the relay is energized when the output frequency does **not** equal the command frequency.
			NOTE Inverting P140 or P142 when the parameter is set to NONE (0) will result in the output being energized continuously.			
			NOTE For SMVector drives rated at 0.33 to 10 HP (0.25 to 7.5 kW), P144 is only available with software versions 3.0 and higher (refer to P501).			
P145	Loss of Load Threshold	0	0	{%}	200	P140, P142 = 10: Output will energize if motor load falls below the P145 value longer than the P146 time
P146	Loss of Load Delay	0.0	0.0	{s}	240.0	
P149	Analog Output Offset	0.0	0	{%}	100	Scaled value. Example: P149 = 10%, Scaled variable = freq, P150 = 1, P152 = 60Hz; then TB30 = 0VDC below 6Hz
P150	TB-30 Output	0	0 None			2-10 VDC signal can be converted to 4-20 mA with a total circuit impedance of 500 Ω
			1 0-10 VDC Output Frequency			
			2 2-10 VDC Output Frequency			
			3 0-10 VDC Load			
			4 2-10 VDC Load			
			5 0-10 VDC Torque			
			6 2-10 VDC Torque			
			7 0-10 VDC Power (kW)			
			8 2-10 VDC Power (kW)			
			9 Network Controlled			SMV models < 15HP (11kW) require an optional communication module (refer to the network module documentation).
			10 Sequencer Controlled			Value set in individual sequencer segments
P152	TB-30 Scaling: Frequency	60.0	3.0	{Hz}	2000	If P150 = 1 or 2, sets the frequency at which output equals 10 VDC
P153	TB-30 Scaling: Load	200	10	{%}	500	If P150 = 3 or 4, sets the Load (as a percent of drive current rating) at which output equals 10 VDC.
P154	TB-30 Scaling: Torque	100	10	{%}	1000	If P150 = 5 or 6, sets the Torque (as a percent of motor rated torque) at which output equals 10 VDC
P155	TB-30 Scaling: Power (kW)	1.0	0.1	{kW}	200.0	If P150 = 7 or 8, sets the power at which output equals 10 VDC

4.5.3 Advanced Setup Parameters

Code		Possible Settings				IMPORTANT
No.	Name	Default	Selection			
P 156	Analog Inputs Configuration	0	0 TB5: (0-10 VDC); TB25: (4-20mA) 1 TB5: (0 - 5 VDC); TB25: (4-20mA) 2 TB5: (2 - 10 VDC); TB25: (4-20mA) 4 TB5: (0-10 VDC); TB25: (0-20mA) 5 TB5: (0 - 5 VDC); TB25: (0-20mA) 6 TB5: (2 - 10 VDC); TB25: (0-20mA)			
P 157	TB5 (0-10V) Analog Input Monitoring Action	0	0 No Action 1 If TB5 < P158 - Trip Fault F_FAU 2 If TB5 < P158 - Run Preset #8 3 If TB5 < P158 - Run Preset Seg. #16 4 If TB5 > P158 - Trip Fault F_FAU 5 If TB5 > P158 - Run Preset #8 6 If TB5 > P158 - Run Preset Seg. #16			Selects the reaction to a loss of the 0-10V signal at TB5 500ms is the minimum time above/below Monitoring Level (P158) before triggering the drive to trip or run at a preset speed. For P157 = 3 or 6, the accel/decel time is set in P786. **NOTE:** P157 has priority over P163 and TB-13 presets/auto references (P121-P124)
P 158	TB5 (0-10V) Analog Input Monitoring Level (ML)	0.0	-10.0	{VDC}	10.0	Negative input voltage is not currently supported.
P 159	0-10V Analog Input Deadband	0.0	0	{VDC}	10.0	Not active if [-10 to +10 VDC] option is selected.
P 160	Speed at Minimum Signal	0.0	-999.0	{Hz}	1000	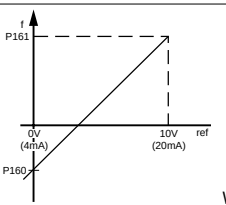 V0111
P 161	Speed at Maximum Signal	60.0	-999.0	{Hz}	1000	
			NOTE • P160 sets the output frequency at 0% analog input • P161 sets the output frequency at 100% analog input • P160 or P161 < 0.0 Hz: For scaling purposes only; does not indicate opposite direction! • P160 > P161: Drive will react inversely to analog input signal			
P 162	Analog Input Filter	0.01	0.00	{s}	10.00	• Adjusts the filter on the analog inputs (TB-5 and TB-25) to reduce the effect of signal noise • The P162 delay time will affect the response time of diagnostic parameters (P520-P523).
P 163	TB-25 (4-20mA) Analog Input Monitoring Action	0	0 No Action 1 If TB25 < P164 - Trip Fault F_FaL 2 If TB25 < P164 - Run Preset #7 3 If TB25 < P164 - Run Preset Seg. #15 4 If TB25 ≥ P164 - Trip Fault F_FaL 5 If TB25 ≥ P164 - Run Preset #7 6 If TB25 ≥ P164 - Run Preset Seg. #15			• Selects the reaction to a loss of the 4-20 mA signal at TB-25. • Signal is considered lost if it falls below the value set in P164 • Digital outputs can also indicate a loss of 4-20 mA signal; see P140, P142 • For P163 = 3 or 6, the accel/decel time is set in P781. **NOTE:** P163 has priority over TB-13 presets/auto references (P121-P124)

Code		Possible Settings				IMPORTANT
No.	Name	Default	Selection			
P 164	TB-25 (4-20mA) Analog Input Monitoring Level	2.0	0.0	{mA}	20.0	
P 165	Base Voltage		15	{V}	1000	Valid for V/Hz mode only. Set voltage for bus compensation in V/Hz mode
P 166	Carrier Frequency	See Notes	0 4 kHz 1 6 kHz 2 8 kHz 3 10 kHz			• As carrier frequency is increased, motor noise is decreased • Observe derating in section 2.3 • Automatic shift to 4 kHz at 120% load • NEMA 4X (IP65) Models: Default = 0 (4kHz) • NEMA 1 (IP31) Models: Default = 1 (6kHz)
P 167 (1)	Base Frequency	60.0	10.0	{Hz}	1500	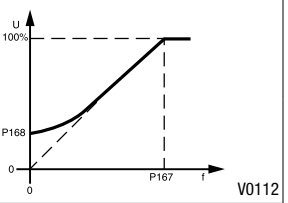
P 168	Fixed Boost		0.0	{%}	40.0	
			NOTE • P167 = rated motor frequency for standard applications • P165, P168 = default setting depends on drive rating			
P 169	Accel Boost	0.0	0.0	{%}	20.0	Accel Boost is only active during acceleration
P 170	Slip Compensation	0.0	0.0	{%}	40.0	Increase P170 until the motor speed no longer changes between no load and full load conditions.
P 171 (1)	Current Limit	Max I	30	{%}	Max I	• When the limit is reached, the drive displays CL (Current Limit), and either the acceleration time increases or the output frequency decreases. • Digital outputs can also indicate when the limit is reached; see P140, P142. • Refer to section 2.3 for the maximum output current Max I (%)
P 172	Current Limit Reduction	0	0 Current Limit Reduction Active - Normal response 1 Current Limit Reduction Active - Fast response 2 Current Limit Reduction Disabled - Normal response 3 Current Limit Reduction Disabled - Fast response			In field weakening, the Current Limit is inversely proportional to the speed.
P 173	Decel Override Time	2.0	0.0	{s}	60.0	Maximum time before drive trips into HF fault.
P 174	DC Brake Voltage	0.0	0.0	{%}	50.0	Setting is a percent of the nominal DC bus voltage.

(1) Any changes to this parameter will not take effect until the drive is stopped.

Code		Possible Settings				IMPORTANT
No.	Name	Default	Selection			
P175	DC Brake Time	0.0	0.0	{s}	999.9	
			NOTE: CONFIRM MOTOR SUITABILITY FOR USE WITH DC BRAKING DC Brake voltage (P174) is applied for the time specified by P175 with the following exceptions: • If P111=1, 3 and P175=999.9 the brake voltage will be applied continuously until a run or fault condition occurs. • If P110=2, 4…6 and P175=999.9, brake voltage will be applied for 15s • If P121…P124=18 and the corresponding TB-13 input is CLOSED, brake voltage will be applied until the TB-13 input is OPENED or a fault condition occurs.			
P176	Keypad Setpoint Single Press Increment	0.1	0.1		100.0	Used for run screen setpoint editing only. If P176 >0.1 then scrolling of keypad setpoint is disabled.
P177 (2)	Speed Units	0	0 Hz 1 RPM 2 % 3 /UNITS 4 NONE			Select the UNITS LED that will be illuminated when the drive is running in speed control mode. For this parameter to be used, P178 must be set to a value other than 0. IF P178 is set to 0, the Hz LED will be illuminated regardless of the value set in P177.
P178	Display Frequency Multiplier	0.00	0.00		650.00	• Allows frequency display to be scaled • P178 = 0.00: Scaling disabled • P178 > 0.00: Display = Actual Frequency X P178
			EXAMPLE If P178 = 29.17 and actual frequency = 60 Hz, then Drive displays 1750 (rpm)			
P179	Run Screen Display	0	0 {Parameter Number}		599	• 0 = Normal Run Screen, this display depends on mode of operation. Refer to section 4.2. • Other selections choose a diagnostic parameter to display (P501…P599). • Parameters P560 - P564 are selectable if the sequencer is enabled (P700 is not 0). P560-P564 are not visible until P700 is enabled.
P180	Oscillation Damping Control	0	0		80	0 = Damping disabled Compensation for resonances within drive
P181	Skip frequency 1	0.0	0.0	{Hz}	500	• Drive will not run in the defined skip range; used to skip over frequencies that cause mechanical vibration • P181 and P182 define the start of the skip ranges • P184 > 0 defines the bandwidth of both ranges.
P182	Skip frequency 2	0.0	0.0	{Hz}	500	
P184	Skip frequency bandwidth	0.0	0.0	{Hz}	10.0	
			NOTE Bandwidth (Hz) = f_s (Hz) + P184 (Hz) f_s = P181 or P182 EXAMPLE: P181 = 18 Hz and P184 = 4 Hz; skip range is from 18 to 22 Hz			
P185	Voltage Midpoint V/Hz characteristic	0	0.0	{V}	P165	Valid only when P300 = 0 or 2. Use with P187 to define midpoint on V/Hz curve.
P187 (2)	Frequency Midpoint V/Hz characteristic	0.0	0.0	{Hz}	P167	Valid only when P300 = 0 or 2. Use with P185 to define midpoint on V/Hz curve.
P189 (3)	Integrated Dynamic Brake		0 Disabled 1 Enabled			

(2) Parameter applicable to SMV models 15HP (11kW) and higher.

(3) Parameter applicable to SMV models 40HP (30kW) and higher.

Code		Possible Settings		IMPORTANT
No.	Name	Default	Selection	
P190	Motor Braking		0 Disabled	Flux brake OFF.
			1 Braking with BUS threshold	When drive is in deceleration and $V_{bus} > V_{deceleration\ freeze}$ (114% of the rated V_{bus}), the flux brake will be turned ON.
			2 Braking always on with deceleration	As long as drive is in deceleration, the flux brake will be ON.
			3 Braking with bus regulator	When drive is in deceleration and $V_{bus} > V_{deceleration\ freeze}$ (114% of the rated V_{bus}), the motor speed will be increased to reduce the bus voltage. Determined by the value in P191, the speed increment = slip speed * P191(%) / 37.
			4 Special	(Consult factory before using)
		⚠	**WARNING** Flux braking can cause heat in the motor. To avoid damage to the motor, use a PTC to protect the motor. If the flux brake is used too frequently, the drive will trip fault "F_PF".	
P191	Motor Brake Level	0	0 {%} 75 (flux braking disabled)	Active when P190 > 0 and drive is in deceleration mode. Use to reduce deceleration time on high inertia loads. **NOTE:** Over usage of P190 can cause frequent 'overload' trips "F.PF" Not active for P300 = 5 (Torque mode)
P192	Motor Braking Deceleration Reduction Level	0.0	0 P167 (base freq) Raising the value of P191 reduces the drive deceleration rate during flux braking.	Active when P190 > 0 and P192 > 0.0, Drive is in deceleration mode. Use to reduce deceleration time on high inertia loads. **NOTE**: Usage of P192 can cause the drive to decelerate faster than settings in P105/P127. Not active for P300 = 5 (Torque mode)
P194	Password	0	0000 9999	• Must enter password to access parameters • P194 = 0000: Disables password
P197	Clear Fault History	0	0 No Action	
			1 Clear Fault History	
P199	Program Selection		0 Operate from User settings	
			1 Operate from OEM settings	Refer to Notes 1, 2 and 3
			2 Reset to OEM default settings	Refer to Note 1
			3 Reset to 60 Hz default settings	• Refer to Note 4 • Parameters are reset to the defaults listed in this manual. • For P199=4, the following exceptions apply: - P103, P152, P161, P167 = 50.0 Hz - P165 = 400V (400/480V drives only) - P304 = 50 Hz - P305 = 1450 RPM - P107 = 0 (480 V drives only)
			4 Reset to 50 Hz default settings	
			5 Translate	Refer to Note 5
		⚠	**WARNING!** Modification of P199 can affect drive functionality! STOP and EXTERNAL FAULT circuitry may be disabled! Check P100 and P121...P124	
		ℹ	**NOTE 1** If the EPM does not contain valid OEM settings, a flashing CF will be displayed when P199 is set to 1 or 2. **NOTE 2** When P199 is set to 1, the drive operates from the OEM settings stored in the EPM Module and no other parameters can be changed (CE will be displayed if attempted). **NOTE 3** Auto Calibration is not possible when operating from OEM Settings. **NOTES 4 and 5 - on next page.**	

Code		Possible Settings		IMPORTANT
No.	Name	Default	Selection	
P199	Program Selection		**NOTE 4** Resetting to 50 and 60 Hz default settings will set the Assertion Level (P120) to "2" (High). P120 may need to be reset for the digital input devices being used. An F_AL fault may occur if P120 and the Assertion switch are not set identically. **NOTE 5** If an EPM that contains data from a previous compatible software version is installed: • The drive will operate according to the previous data, but parameters cannot be changed (cE will be displayed if attempted) • To update the EPM to the current software version, set P199 = 5. The parameters can now be changed but the EPM is incompatible with previous software revisions.	

4.5.4 PID Parameters

Code		Possible Settings		IMPORTANT
No.	Name	Default	Selection	
P200	PID Mode	0	0 Disabled 1 Normal-acting 2 Reverse-acting 3 Normal-acting, Bi-directional 4 Reverse-acting, Bi-directional	• Normal-acting: As feedback increases, motor speed decreases • Reverse-acting: As feedback increases, motor speed increases • PID mode is disabled in Vector Torque mode (P300 = 5) • Selections 3, 4: If P112=1, PID controller output sets the speed, (range -max freq to +max freq)
			NOTE To activate PID mode, one of the TB-13 inputs (P121...P124) must be used to select the Auto Reference that matches the desired PID setpoint reference. If the selected PID setpoint reference uses the same analog signal as the PID feedback (P201), an F_IL fault will occur. **Example:** The desired PID setpoint reference is the keypad (▲ and ▼). Set TB-13x = 6 (Auto Reference: Keypad): • TB-13x = closed: PID mode is active • TB-13x = open: PID mode is disabled and the drive speed will be controlled by the reference selected in P101.	
P201	PID Feedback Source	0	0 4-20 mA (TB-25) 1 0-10 VDC (TB-5) 2 Drive Load (P507) 3 Feedback from Network	Must be set to match the PID feedback signal
P202	PID Decimal Point	1	0 PID Display = XXXX 1 PID Display = XXX.X 2 PID Display = XX.XX 3 PID Display = X.XXX 4 PID Display = .XXXX	Applies to P204, P205, P214, P215, P231...P233, P242, P522, P523
P203 (2)	PID Units	0	0 % 1 /UNITS 2 AMPS 3 NONE	Select the UNITS LED that will be illuminated when the drive is running in PID control mode
P204	Feedback at Minimum Signal	0.0	-99.9 3100.0	Set to match the range of the feedback signal being used
P205	Feedback at Maximum Signal	100.0	-99.9 3100.0	**Example:** Feedback signal is 0 - 300 PSI; P204 = 0.0, P205 = 300.0

(2) Parameter applicable to SMV models 15HP (11kW) and higher.

Code		Possible Settings				IMPORTANT
No.	Name	Default	Selection			
P207	Proportional Gain	5.0	0.0	{%}	1000.0	Used to tune the PID loop: • Increase P207 until system becomes unstable, then decrease P207 by 10-15% • Next, increase P208 until feedback matches setpoint • If required, increase P209 to compensate for sudden changes in feedback
P208	Integral Gain	0.0	0.0	{s}	20.0	
P209	Derivative Gain	0.0	0.0	{s}	20.0	
			NOTE • Derivative Gain is very sensitive to noise on the feedback signal. Use with care. • Derivative Gain is not normally required in pump and fan applications			
P210	PID Setpoint Ramp	20.0	0.0	{s}	100.0	• time of setpoint change from P204 to P205 or vice versa. • Used to smooth the transition from one PID setpoint to another, such as when using the Preset PID Setpoints (P231...P233)
P214	Minimum Alarm	0.0	P204		P205	Use with P140, P142 = 18...23
P215	Maximum Alarm	0.0	P204		P205	
P231	Preset PID Setpoint #1	0.0	P204		P205	TB-13A activated; P121 = 3 and P200 = 1 or 2
P232	Preset PID Setpoint #2	0.0	P204		P205	TB-13B activated; P122 = 3 and P200 = 1 or 2
P233	Preset PID Setpoint #3	0.0	P204		P205	TB-13C activated; P123 = 3 and P200 = 1 or 2
P234(2)	Preset PID Setpoint #4	0.0	P204		P205	TB-13D activated; P124 = 3 and P200 = 1 or 2
P240	Sleep Threshold	0.0	0.0	{Hz}	500.0	• If drive speed < P240 for longer than P241, output frequency = 0.0 Hz; drive display = SLP • P240 = 0.0: Sleep mode is disabled. • P200 = 0…2: Drive will start again when speed command is above P240 • P242 > 0.0: Drive will restart when the PID feedback differs from the setpoint by more than the value of P242 **or** when the PID loop requires a speed above P240.
P241	Sleep Delay	30.0	0.0	{s}	300.0	
P242	Sleep Bandwidth	0.0	0.0 Where: B_{max} = |(P205 - P204)|		B_{max}	
P243	Feedback Sleep Entry Threshold	0.0	P204		P205	Active only when P244 = 1 or 2
P244	Sleep Entry Mode	0	0 Enter SLEEP if Drive Speed <P240			For time longer than P241
			1 Enter SLEEP if Feedback >P243			For time longer than P241 or same as Sel 0
			2 Enter SLEEP if Feedback <P243			For time longer than P241 or same as Sel 0
P245	Sleep Entry Stop Type	0	0 Coast to Stop			
			1 Ramp to Stop			
			2 Stop with P111 settings			
P246	Feedback Recovery from Sleep Threshold	0.0	P204		P205	Active only when P247 = 1 or 2
P247	Sleep Recovery Mode	0	0 Recovery if Speed Setpoint > P240 or if PID feedback differs from setpoint by more than P242			
			1 Recovery only if Feedback < P246			
			2 Recovery only if Feedback > P246			

(2) Parameter applicable to SMV models 15HP (11kW) and higher.

Code		Possible Settings				IMPORTANT
No.	Name	Default	Selection			
P250	Auto Rinse in Sleep Mode	0	0 Disabled 1 Enabled			Activated in sleep mode only. Sleep Recovery cancels Auto Rinse
P251	Time Delay between Auto Rinses	30.0	0.0	{min}	6553.5	Time delay reset by re/entering sleep mode
P252	Auto Rinse Speed	0.0	-500.0	{Hz}	500.0	If P112 = 1, negative sign = reverse direction
P253	Auto Rinse Time	0.0	0.0	{sec}	6553.5	Does not include time to decel back to speed
			Auto Pump Rinse Setup: P250=1 (Enabled) P251=# minutes between each PumpRinse P252=Hz speed of Pump Rinse P253=# seconds Pump Rinse duration			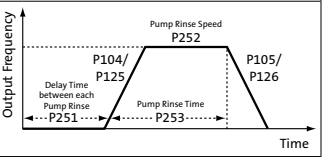
P280	Current Level: Flying Restart Type 2	70.0	0.0	{%}	P171	Maximum current during Type 2 flying restart operation
P281	Decel Time: Flying Restart Type 2	3.0	0.0	{sec}	3600.0	Deceleration rate used during Type 2 flying restart operation

4.5.5 Vector Parameters

Code		Possible Settings				IMPORTANT
No.	Name	Default	Selection			
P300 (1)	Drive Mode	0	0 Constant V/Hz			Constant torque V/Hz control for general applications
			1 Variable V/Hz			Variable torque V/Hz control for centrifugal pump and fan applications
			2 Enhanced Constant V/Hz 3 Enhanced Variable V/Hz			For single or multiple motor applications that require better performance than settings 0 or 1, but cannot use Vector mode, due to: • Missing required motor data • Vector mode causing unstable motor operation
			4 Vector Speed			For single-motor applications requiring higher starting torque and speed regulation
			5 Vector Torque			For single-motor applications requiring torque control independent of speed
			NOTE To configure the drive for either Vector mode or Enhanced V/Hz mode: • P300 = 4, 5: - Set P302...P306 according to motor nameplate - Set P399 = 1 or 2 (if option 1 failed or in case of non-standard motor) - Make sure motor is cold (20° - 25° C) and apply a Start command - Display will indicate CAL for about 40 seconds - Once the calibration is complete, the display will indicate StoP; apply another Start command to actually start the motor - If an attempt is made to start the drive in Vector or Enhanced V/Hz mode before performing the Motor Calibration, the drive will display F_n Id and will not operate • P300 = 2, 3: Same as above but only need to set P302…P304			
P302 (1)	Motor Rated Voltage		0	{V}	600	• Default setting = drive rating • Set to motor nameplate data
P303 (1)	Motor Rated Current		0.1	{A}	500.0	

(1) Any changes to this parameter will not take effect until the drive is stopped.

Code		Possible Settings				IMPORTANT
No.	Name	Default	Selection			
P304 (1)	Motor Rated Frequency	60	0	{Hz}	1000	Set to motor nameplate data
P305 (1)	Motor Rated Speed	1750	300	{RPM}	65000	
P306 (1)	Motor Cosine Phi	0.80	0.40		0.99	
			NOTE If motor cosine phi is not known, use one of the following formulas: cos phi = motor Watts / (motor efficiency X P302 X P303 X 1.732) cos phi = cos [$\sin^{-1}$ (magnetizing current / motor current)]			
P310 (1)	Motor Stator Resistance		0.00	{Ω}	64.00	• P310, 311 default setting depends on drive rating • Will be automatically programmed by P399 • Changing these settings can adversely affect performance. Contact factory technical support prior to changing
P311 (1)	Motor Stator Inductance		0.0	{mH}	2000	
P315	Dead Time Compensation Factor	0.0	-50.0	{%}	+50.0	• Adjust dead time correction from internal default • Takes effect when P399 = 3.
P330	Torque Limit	100	0	{%}	400	When P300 = 5, sets the maximum output torque.
P331	Preset Torque Setpoint #1	100	0	{%}	400	TB-13A activated; P121 = 3 and P300 = 5
P332	Preset Torque Setpoint #2	100	0	{%}	400	TB-13B activated; P122 = 3 and P300 = 5
P333	Preset Torque Setpoint #3	100	0	{%}	400	TB-13C activated; P123 = 3 and P300 = 5
P334 (2)	Preset Torque Setpoint #4	100	0	{%}	400	TB-13D activated; P124 = 3 and P300 = 5
P340 (1)	Current Loop P Gain	0.25	0.00		16.0	Changing these settings can adversely affect performance. Contact factory technical support prior to changing.
P341 (1)	Current Loop I Gain	65	12	{ms}	9990	
P342 (1)	Speed Loop Adjust	0.0	0.0	{%}	20.0	
P343	Slip Compensation Response Filter	99	90	{ms}	9999	Low pass filter time constant for varying the slip compensation response to changes in the motor current.
P399	Motor Auto-calibration	0	0 Calibration Not Done 1 Standard Calibration Enabled 2 Advanced Calibration Enabled 3 Bypass Calibration, enable operation in vector mode w/o Auto Calibration 4 Standard Calibration Complete 5 Advanced Calibration Complete			• If P300 = 4 or 5, motor calibration must be performed if P399 is not set to 3 (bypass calibration). • If P300=2 or 3, motor calibration is recommended. • Use option 2 if option 1 failed or in case of non-standard motors • An alternating CAL / Err will occur if: - attempt motor calibration with P300 = 0 or 1 - motor calibration is attempted before programming motor data
			NOTE: To run the Auto Calibration: – Set P302...P306 according to motor nameplate – Set P399 = 1 or 2 (if option 1 failed or in case of non-standard motor) – Make sure motor is cold (20° - 25° C) – Apply a Start command – Display will indicate CAL for about 40 seconds – Once the calibration is complete, the display will indicate StoP; apply another Start command to actually start the motor – Parameter P399 will now be set to 4 or 5.			

(1) Any changes to this parameter will not take effect until the drive is stopped.

(2) Parameter applicable to SMV models 15HP (11kW) and higher.

4.5.6 Network Parameters

Code		Possible Settings		IMPORTANT
No.	Name	Default	Selection	
P400	Network Protocol		0 Not Active	This parameter setting is based upon the network or I/O module that is installed.
			1 Remote Keypad	
			2 Modbus RTU	
			3 CANopen	
			4 DeviceNet	
			5 Ethernet	
			6 Profibus	
			7 Lecom-B	
			8 I/O Module	
P401	Module Type Installed	0	0 No Module Installed	Module type format: 0xAABC; Drive Display: AA.B.C AA = Module Type B = Major revision C = minor revision
			1 Basic I/O (0x0100, 1.0.0)	
			2 RS485/Rem. Keypad (0x0200, 2.0.0)	
			3 CANopen (0x0300, 3.0.0)	
			11 PROFIBUS (0x1100, 11.0.0)	
			12 Ethernet (0x1200, 12.0.0)	
P402	Module Status	0	0 Not Initialized	
			1 Initialization: Module to EPM	
			2 Initialization: EPM to Module	
			3 Online	
			4 Failed Initialization Error	
			5 Time-out Error	
			6 Initialization Failed	Module type mismatch P401
			7 Initialization Error	Protocol selection mismatch P400
P403	Module Reset	0	0 No Action	Returns module parameters 401…499 to the default values shown in the manual
			1 Reset parameters to default values	
P404	Module Timeout Action	3	0 No Fault	Action to be taken in the event of a Module/ Drive Time-out. Time is fixed at 200ms STOP is by the method selected in P111.
			1 STOP (see P111)	
			2 Quick Stop	
			3 Fault (F_ntF)	
P405	Current Network Fault		0 No Fault	
			1 F.nF1	NetIdle Mode
			2 F.nF2	Loss of Ethernet I/O connection
			3 F.nF3	Network Fault
			4 F.nF4	Explicit Message Timeout
			5 F.nF5	Overall Network Timeout
			6 F.nF6	Overall Explicit Timeout
			7 F.nF7	Overall I/O Message Timeout
P406	Proprietary			Manufacturer specific
P407 … P499		Module Specific Parameters		Refer to the Communications Reference Guide specific to the network or I/O module installed.

4.5.7 Diagnostic Parameters

Code		Display Range (READ ONLY)			IMPORTANT
No.	Name				
P500	Fault History				• Displays the last 8 faults • Format: n.xxx where: n = 1..8, 1 is the newest fault; xxx = fault message (w/o the **F.**) • Refer to section 5.3
P501	Software Version				Format: x.yz
P502	Drive ID				A flashing display indicates that the Drive ID stored in the EPM does not match the drive model it is plugged into.
P503	Internal Code				Alternating Display: xxx-; -yy
P505	DC Bus Voltage	0	{VDC}	1500	
P506	Motor Voltage	0	{VAC}	1000	
P507	Load	0	{%}	255	Motor load as % of drive's output current rating. Refer to section 2.3.
P508	Motor Current	0.0	{A}	1000	Actual motor current
P509	Torque	0	{%}	500	Torque as % of motor rated torque (vector mode only)
P510	Output Power kW	0.00	{kW}	650.0	
P511	Total kWh	0.0	{kWh}	9999999	Alternating display: xxx-; yyyy when value exceeds 9999
P512	Heatsink Temp	0	{°C}	150	Heatsink temperature
P520	0-10 VDC Input	0.0	{VDC}	10.0	Actual value of signal at TB-5 (See P162)
P521	4-20 mA Input	0.0	{mA}	20.0	Actual value of signal at TB-25 (See P162)
P522	TB-5 Feedback	P204		P205	TB-5 signal value scaled to PID feedback units (See P162)
P523	TB-25 Feedback	P204		P205	TB-25 signal value scaled to PID feedback units (See P162)
P524	Network Feedback	P204		P205	Network signal value scaled to PID feedback units
P525	Analog Output	0	{VDC}	10.0	Refer to P150…P155
P527	Actual Output Frequency	0	{Hz}	500.0	
P528	Network Speed Command	0	{Hz}	500.0	Command speed if (Auto: Network) is selected as the speed source
P530	Terminal and Protection Status				Indicates terminal status using segments of the LED display. (Refer to section 4.5.7.1)
P531	Keypad Status				Indicates keypad button status using segments of the LED display. (Refer to section 4.5.7.2)
P540	Total Run Time	0	{h}	9999999	Alternating display: xxx-; yyyy when value exceeds 9999
P541	Total Power On Time	0	{h}	9999999	
P550	Fault History	1		8	• Displays the last 8 faults • Format: n.xxx where: n = 1..8, 1 is the newest fault; xxx = fault message (w/o the **F.**) • Refer to section 5.3
P551	Fault History Time	0	{h}	999999	Display: "n.hh-" "hhhh" "mm.ss" = fault #, hours, seconds The "hhhh" screen is displayed after hours exceed 999.
P552	Fault History Counter	0		255	Number of sequential occurrences of a fault. For example: 3 external faults occur over a period of time with no other errors occurring. Then P552 will indicate 3, P550 will indicate the error EF and P551 will indicate the time of the first fault occurrence.

Code		Display Range (READ ONLY)			IMPORTANT
No.	Name				
P560	Sequencer: Currently Active Segment	0		17	
P561	Sequencer: Time since Start of Active Segment	0.0 0	{P708} {P708}	6553.5 65535	Unit depends on P708 (0.1sec, sec or minutes)
P562	Sequencer: Time Remaining in Active Segment	0.0 0	{P708} {P708}	6553.5 65535	Unit depends on P708 (0.1sec, sec or minutes)
P563	Sequencer: Number of cycles since start	0		65535	
P564	Sequencer: Number of cycles remaining	0		65535	
		NOTE: Parameters P560-P564 are visible only when P700 > 0 (i.e. the sequencer is enabled)			

4.5.7.1 Terminal & Protection Status Display

Parameter P530 allows monitoring of the control terminal points and common drive conditions:

An illuminated LED segment indicates:

- the protective circuit is active (LED 1)
- the Logic Assertion Switch is set to High (+)
- input terminal is asserted (LED 2)
- output terminal is energized (LED 4)
- the Charge Relay is not a terminal, this segment will be illuminated when the Charge Relay is energized (LED 4).

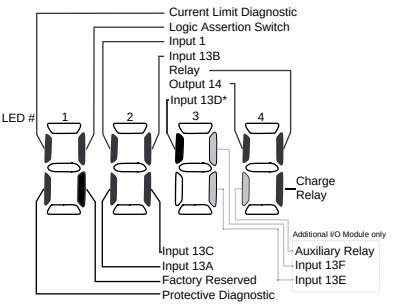

* Input 13D available on 15-60HP (11-45kW) models only

4.5.7.2 Keypad Status Display

Parameter P531 allows monitoring of the keypad pushbuttons:

An illuminated LED segment indicates when the button is depressed.

LED 1 and LED 2 are used to indicate pushbutton presses on a remote keypad that is attached to the drive. LED 3 and LED 4 indicate button presses on the local drive keypad.

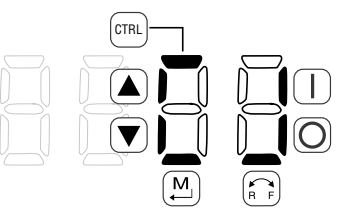

4.5.8 Onboard Communications Parameters 15-60HP (11-45kW)

The P6xx Onboard Communication parameters are applicable to the 15HP (11kW) and higher models only.

Code		Possible Settings		IMPORTANT
No.	Name	Default	Selection	
P600	Network Enable	0	0 Disabled 1 Remote Keypad 2 Modbus 7 Lecom	This parameter enables the onboard network communications.
			NOTE: Onboard Communications will be disabled if: - P600 = 0, or - P600 = 1 and P400 = 1, or - P600 = 2 and P400 = 2, 3, 4, 5, 6 or 7 - P600 = 7 and P400 = 2, 3, 4, 5, 6 or 7	If the onboard communications are disabled, the user will not have access to any of the other P6xx parameters.
P610	Network Address	1	1 - 247	Modbus
		1	1 - 99	Lecom
P611	Network Baud Rate	2	0 2400 bps 2 9600 bps 1 4800 bps 3 19200 bps	Modbus
		0	0 9600 bps 1 4800 bps 2 2400 bps 3 1200 bps 4 19200 bps	Lecom
P612	Network Data Format	0	0 8, N, 2 1 8, N, 1 2 8, E, 1 3 8, O, 1	Modbus Only
P620	Network Control Level	0	0 Monitor Only 1 Parameter Programming 2 Programming and Setpoint Control 3 Full Control	Lecom Only
P624	Network Powerup Start Status	0	0 Quick Stop 1 Controller Inhibit	Lecom Only
P625	Network Timeout	10.0	0.0 - 300.0 seconds	Modbus
		50	0 - 65000 milliseconds	Lecom
P626	Network Timeout Action	4	0 No action 1 Stop (P111) 2 Quick Stop 3 Controller Inhibit 4 Trip Fault, F.nF1	Modbus
		0	0 No action 1 Controller Inhibit 2 Quick Stop 3 Trip Fault, F.nF1	Lecom
P627	Network Messages Received		Read-Only: 0 - 9999	Valid network messages received
			NOTE: When the number of messages exceeds 9999, the counter resets and resumes counting from 0.	

4.5.9 Sequencer Parameters

The P700 Sequencer parameters are listed herein. Refer to section 4.5.7 for P56x Sequencer Diagnostic Parameters. The sequencer function consists of 16 step segments, each individual step segment can have its own ramp time, time spent in individual segment and output frequency entered. The sequencer has 3 different modes to control how the drive moves through each individual step segment: Timer Transition, Step Sequence or Timer and Step Sequence.

P700= 1 (Timer Transition)

Starting at the segment number entered in the “Start Segment” parameter, the drive will automatically move through each of the segments. The time spent in each segment is determined by the values set in the individual “Time in Current Step” parameters.

P700= 2 (Step Sequence)

Starting at the segment number entered in the “Start Segment” parameter the sequencer will only move to the next segment when a rising edge is applied to the highest priority digital input which is programmed to “Step Sequence” selection “24”.

P700= 3 (Timer Transition or Step Sequence)

Starting at the segment number entered in the “Start Segment” parameter, the drive will automatically move through each of the segments. The time spent in each segment is determined by the values set in the individual “Time in Current Step” parameters, however if a rising edge is applied to the highest priority digital input which is programmed to “Step Sequence” selection “24” it will force the sequencer to step into the next segment.

NOTE: A value of ”0” in the “Time in current step” parameter (ex: P712), will result in the segment being skipped.

Code		Possible Settings		IMPORTANT
No.	Name	Default	Selection	
P700	Sequencer Mode	0	0 Disabled 1 Enabled: transition on timer only 2 Enabled: transition on rising edge (P121, 122, 123 = 25 step sequence) 3 Enabled: transition on timer or rising edge	If P700 = 0 and no reference (P121, P101) points to any of the sequence segments, then P701-P799 will not be displayed on the local keypad.
P701	Sequencer: TB13A Trigger Segment	1	1 - 16 TB13A = lowest priority	Asserting TB13A with selection #24 (Start Sequence), starts the sequence operation from the segment specified in this parameter.
P702	Sequencer: TB13B Trigger Segment	1	1 - 16 TB13B: higher priority than TB13A	Asserting TB13B with selection #24 (Start Sequence), starts the sequence operation from the segment specified in this parameter.
P703	Sequencer: TB13C Trigger Segment	1	1 - 16 TB13C: higher priority thanTB13B, A	Asserting TB13C with selection #24 (Start Sequence), starts the sequence operation from the segment specified in this parameter.
P704(2)	Sequencer: TB13D Trigger Segment	1	1 - 16 TB13D: higher priority than TB13C, B, A	Asserting TB13D with selection #24 (Start Sequence), starts the sequence operation from the segment specified in this parameter.
P706	Sequencer: Action after Stop/Start transition or Fault Restart	0	0 Restart at beginning of sequence 1 Restart at beginning of current seg 2 Start at beginning of prior segment 3 Start at beginning of next segment	Pointed by TB13x
P707	Sequencer: Number of cycles	1	1 65535	1 = single scan; 65535 = continuous loop

(2) Parameter applicable to SMV models 15HP (11kW) and higher.

<table>
<tr><th colspan="2">Code</th><th colspan="4">Possible Settings</th><th rowspan="2">IMPORTANT</th></tr>
<tr><th>No.</th><th>Name</th><th>Default</th><th colspan="3">Selection</th></tr>
<tr><td rowspan="2">P708</td><td rowspan="2">Sequencer: Time units/scaling</td><td>0</td><td colspan="3">0 0.1 {sec} 6553.5
1 1 {sec} 65535
2 1 {min} 65535</td><td>Setup units/scaling for all sequencer time related parameters</td></tr>
<tr><td></td><td colspan="4">NOTE:
P708 rescales the following sequencer related parameters:
- Segment Times in current step: P712, P717, P722, P727, P732, P737, P742, P747, P752, P757, P762, P767, P772, P777, P782, P787, P792
- Sequence diagnostic/status: P561, P562</td></tr>
<tr><td></td><td colspan="6">Segment #1</td></tr>
<tr><td>P710</td><td>Segment #1 Frequency Setpoint</td><td>0.0</td><td>-500.0</td><td>{Hz}</td><td>500.0</td><td>If P112 = 1, negative sign forces reverse direction</td></tr>
<tr><td>P711</td><td>Segment #1 Accel/Decel Time</td><td>20.0</td><td>0.0</td><td>{sec}</td><td>3600.0</td><td></td></tr>
<tr><td>P712</td><td>Segment #1 Time in current step</td><td>0.0
0</td><td>0.0
0</td><td>{P708}
{P708}</td><td>6553.5
65535</td><td>Scaling/units depend on P708
Skip segment if time = 0</td></tr>
<tr><td>P713</td><td>Segment #1 Digital Output State</td><td>0</td><td colspan="3"><table><tr><th>Value set in P713</th><th>0</th><th>1</th><th>2</th><th>3</th><th>4</th><th>5</th><th>6</th><th>7</th></tr><tr><td>Relay (Bit 0)</td><td>0</td><td>1</td><td>0</td><td>1</td><td>0</td><td>1</td><td>0</td><td>1</td></tr><tr><td>TB14 (Bit 1)</td><td>0</td><td>0</td><td>1</td><td>1</td><td>0</td><td>0</td><td>1</td><td>1</td></tr><tr><td>I/O option Relay (Bit 2)</td><td>0</td><td>0</td><td>0</td><td>0</td><td>1</td><td>1</td><td>1</td><td>1</td></tr></table>NOTE: P441 is the Relay Output (TB-19, 20, 21) of the optional Digital I/O module (ESVZAL0, ESVZAL1).</td><td>bit = 0: OFF (De-energized)
bit = 1: ON (Energized)
The corresponding digital output/relay must be set to accept data from the sequencer: P140, P142, P441 = 27</td></tr>
<tr><td>P714</td><td>Segment #1 TB30 Analog Output Value</td><td>0.00</td><td>0.00</td><td>{VDC}</td><td>10.00</td><td>TB30 configuration parameter must be set to accept this value: P150 = 10</td></tr>
<tr><td></td><td colspan="6">Segment #2</td></tr>
<tr><td>P715</td><td>Segment #2 Frequency Setpoint</td><td>0.0</td><td>-500.0</td><td>{Hz}</td><td>500.0</td><td>If P112 = 1, negative sign forces reverse direction</td></tr>
<tr><td>P716</td><td>Segment #2 Accel/Decel Time</td><td>20.0</td><td>0.0</td><td>{sec}</td><td>3600.0</td><td></td></tr>
<tr><td>P717</td><td>Segment #2 Time in current step</td><td>0.0
0</td><td>0.0
0</td><td>{P708}
{P708}</td><td>6553.5
65535</td><td>Scaling/units depend on P708
Skip segment if time = 0</td></tr>
<tr><td>P718</td><td>Segment #2 Digital Output State</td><td>0</td><td colspan="3"><table><tr><th>Value set in P718</th><th>0</th><th>1</th><th>2</th><th>3</th><th>4</th><th>5</th><th>6</th><th>7</th></tr><tr><td>Relay (Bit 0)</td><td>0</td><td>1</td><td>0</td><td>1</td><td>0</td><td>1</td><td>0</td><td>1</td></tr><tr><td>TB14 (Bit 1)</td><td>0</td><td>0</td><td>1</td><td>1</td><td>0</td><td>0</td><td>1</td><td>1</td></tr><tr><td>I/O option Relay (Bit 2)</td><td>0</td><td>0</td><td>0</td><td>0</td><td>1</td><td>1</td><td>1</td><td>1</td></tr></table>NOTE: P441 is the Relay Output (TB-19, 20, 21) of the optional Digital I/O module (ESVZAL0, ESVZAL1).</td><td>bit = 0: OFF (De-energized)
bit = 1: ON (Energized)
The corresponding digital output/relay must be set to accept data from the sequencer: P140, P142, P441 = 27</td></tr>
<tr><td>P719</td><td>Segment #2 TB30 Analog Output Value</td><td>0.00</td><td>0.00</td><td>{VDC}</td><td>10.00</td><td>TB30 configuration parameter must be set to accept this value: P150 = 10</td></tr>
</table>

Code		Possible Settings				IMPORTANT
No.	Name	Default	Selection			
	Segment #3					
P720	Segment #3 Frequency Setpoint	0.0	-500.0	{Hz}	500.0	If P112 = 1, negative sign forces reverse direction
P721	Segment #3 Accel/Decel Time	20.0	0.0	{sec}	3600.0	
P722	Segment #3 Time in current step	0.0 0	0.0 0	{P708} {P708}	6553.5 65535	Scaling/units depend on P708 Skip segment if time = 0
P723	Segment #3 Digital Output State	0	**Value set in P723** | **0** | **1** | **2** | **3** | **4** | **5** | **6** | **7** Relay (Bit 0) | 0 | 1 | 0 | 1 | 0 | 1 | 0 | 1 TB14 (Bit 1) | 0 | 0 | 1 | 1 | 0 | 0 | 1 | 1 I/O option Relay (Bit 2) | 0 | 0 | 0 | 0 | 1 | 1 | 1 | 1 NOTE: P441 is the Relay Output (TB-19, 20, 21) of the optional Digital I/O module (ESVZAL0, ESVZAL1).			bit = 0: OFF (De-energized) bit = 1: ON (Energized) The corresponding digital output/relay must be set to accept data from the sequencer: P140, P142, P441 = 27
P724	Segment #3 TB30 Analog Output Value	0.00	0.00	{VDC}	10.00	TB30 configuration parameter must be set to accept this value: P150 = 10
	Segment #4					
P725	Segment #4 Frequency Setpoint	0.0	-500.0	{Hz}	500.0	If P112 = 1, negative sign forces reverse direction
P726	Segment #4 Accel/Decel Time	20.0	0.0	{sec}	3600.0	
P727	Segment #4 Time in current step	0.0 0	0.0 0	{P708} {P708}	6553.5 65535	Scaling/units depend on P708 Skip segment if time = 0
P728	Segment #4 Digital Output State	0	**Value set in P728** | **0** | **1** | **2** | **3** | **4** | **5** | **6** | **7** Relay (Bit 0) | 0 | 1 | 0 | 1 | 0 | 1 | 0 | 1 TB14 (Bit 1) | 0 | 0 | 1 | 1 | 0 | 0 | 1 | 1 I/O option Relay (Bit 2) | 0 | 0 | 0 | 0 | 1 | 1 | 1 | 1 NOTE: P441 is the Relay Output (TB-19, 20, 21) of the optional Digital I/O module (ESVZAL0, ESVZAL1).			bit = 0: OFF (De-energized) bit = 1: ON (Energized) The corresponding digital output/relay must be set to accept data from the sequencer: P140, P142, P441 = 27
P729	Segment #4 TB30 Analog Output Value	0.00	0.00	{VDC}	10.00	TB30 configuration parameter must be set to accept this value: P150 = 10
	Segment #5					
P730	Segment #5 Frequency Setpoint	0.0	-500.0	{Hz}	500.0	If P112 = 1, negative sign forces reverse direction
P731	Segment #5 Accel/Decel Time	20.0	0.0	{sec}	3600.0	
P732	Segment #5 Time in current step	0.0 0	0.0 0	{P708} {P708}	6553.5 65535	Scaling/units depend on P708 Skip segment if time = 0
P733	Segment #5 Digital Output State	0	**Value set in P733** | **0** | **1** | **2** | **3** | **4** | **5** | **6** | **7** Relay (Bit 0) | 0 | 1 | 0 | 1 | 0 | 1 | 0 | 1 TB14 (Bit 1) | 0 | 0 | 1 | 1 | 0 | 0 | 1 | 1 I/O option Relay (Bit 2) | 0 | 0 | 0 | 0 | 1 | 1 | 1 | 1 NOTE: P441 is the Relay Output (TB-19, 20, 21) of the optional Digital I/O module (ESVZAL0, ESVZAL1).			bit = 0: OFF (De-energized) bit = 1: ON (Energized) The corresponding digital output/relay must be set to accept data from the sequencer: P140, P142, P441 = 27
P734	Segment #5 TB30 Analog Output Value	0.00	0.00	{VDC}	10.00	TB30 configuration parameter must be set to accept this value: P150 = 10

Code		Possible Settings				IMPORTANT
No.	Name	Default	Selection			
	Segment #6					
P735	Segment #6 Frequency Setpoint	0.0	-500.0	{Hz}	500.0	If P112 = 1, negative sign forces reverse direction
P736	Segment #6 Accel/Decel Time	20.0	0.0	{sec}	3600.0	
P737	Segment #6 Time in current step	0.0 0	0.0 0	{P708} {P708}	6553.5 65535	Scaling/units depend on P708 Skip segment if time = 0
P738	Segment #6 Digital Output State	0	**Value set in P738** | **0** | **1** | **2** | **3** | **4** | **5** | **6** | **7** Relay (Bit 0) | 0 | 1 | 0 | 1 | 0 | 1 | 0 | 1 TB14 (Bit 1) | 0 | 0 | 1 | 1 | 0 | 0 | 1 | 1 I/O option Relay (Bit 2) | 0 | 0 | 0 | 0 | 1 | 1 | 1 | 1 NOTE: P441 is the Relay Output (TB-19, 20, 21) of the optional Digital I/O module (ESVZAL0, ESVZAL1).			bit = 0: OFF (De-energized) bit = 1: ON (Energized) The corresponding digital output/relay must be set to accept data from the sequencer: P140, P142, P441 = 27
P739	Segment #6 TB30 Analog Output Value	0.00	0.00	{VDC}	10.00	TB30 configuration parameter must be set to accept this value: P150 = 10
	Segment #7					
P740	Segment #7 Frequency Setpoint	0.0	-500.0	{Hz}	500.0	If P112 = 1, negative sign forces reverse direction
P741	Segment #7 Accel/Decel Time	20.0	0.0	{sec}	3600.0	
P742	Segment #7 Time in current step	0.0 0	0.0 0	{P708} {P708}	6553.5 65535	Scaling/units depend on P708 Skip segment if time = 0
P743	Segment #7 Digital Output State	0	**Value set in P743** | **0** | **1** | **2** | **3** | **4** | **5** | **6** | **7** Relay (Bit 0) | 0 | 1 | 0 | 1 | 0 | 1 | 0 | 1 TB14 (Bit 1) | 0 | 0 | 1 | 1 | 0 | 0 | 1 | 1 I/O option Relay (Bit 2) | 0 | 0 | 0 | 0 | 1 | 1 | 1 | 1 NOTE: P441 is the Relay Output (TB-19, 20, 21) of the optional Digital I/O module (ESVZAL0, ESVZAL1).			bit = 0: OFF (De-energized) bit = 1: ON (Energized) The corresponding digital output/relay must be set to accept data from the sequencer: P140, P142, P441 = 27
P744	Segment #7 TB30 Analog Output Value	0.00	0.00	{VDC}	10.00	TB30 configuration parameter must be set to accept this value: P150 = 10
	Segment #8					
P745	Segment #8 Frequency Setpoint	0.0	-500.0	{Hz}	500.0	If P112 = 1, negative sign forces reverse direction
P746	Segment #8 Accel/Decel Time	20.0	0.0	{sec}	3600.0	
P747	Segment #8 Time in current step	0.0 0	0.0 0	{P708} {P708}	6553.5 65535	Scaling/units depend on P708 Skip segment if time = 0
P748	Segment #8 Digital Output State	0	**Value set in P748** | **0** | **1** | **2** | **3** | **4** | **5** | **6** | **7** Relay (Bit 0) | 0 | 1 | 0 | 1 | 0 | 1 | 0 | 1 TB14 (Bit 1) | 0 | 0 | 1 | 1 | 0 | 0 | 1 | 1 I/O option Relay (Bit 2) | 0 | 0 | 0 | 0 | 1 | 1 | 1 | 1 NOTE: P441 is the Relay Output (TB-19, 20, 21) of the optional Digital I/O module (ESVZAL0, ESVZAL1).			bit = 0: OFF (De-energized) bit = 1: ON (Energized) The corresponding digital output/relay must be set to accept data from the sequencer: P140, P142, P441 = 27
P749	Segment #8 TB30 Analog Output Value	0.00	0.00	{VDC}	10.00	TB30 configuration parameter must be set to accept this value: P150 = 10

<table>
<tr><th colspan="2">Code</th><th colspan="3">Possible Settings</th><th rowspan="2">IMPORTANT</th></tr>
<tr><th>No.</th><th>Name</th><th>Default</th><th colspan="2">Selection</th></tr>
<tr><td></td><td colspan="5">Segment #9</td></tr>
<tr><td>P750</td><td>Segment #9
Frequency Setpoint</td><td>0.0</td><td>-500.0</td><td>{Hz}
{sec}</td><td>500.0
3600.0</td><td>If P112 = 1, negative sign forces reverse direction</td></tr>
<tr><td>P751</td><td>Segment #9
Accel/Decel Time</td><td>20.0</td><td>0.0</td><td></td><td></td><td></td></tr>
<tr><td>P752</td><td>Segment #9
Time in current step</td><td>0.0
0</td><td>0.0
0</td><td>{P708}
{P708}</td><td>6553.5
65535</td><td>Scaling/units depend on P708
Skip segment if time = 0</td></tr>
<tr><td>P753</td><td>Segment #9
Digital Output State</td><td>0</td><td colspan="3"><table><tr><th>Value set in P753</th><th>0</th><th>1</th><th>2</th><th>3</th><th>4</th><th>5</th><th>6</th><th>7</th></tr><tr><td>Relay (Bit 0)</td><td>0</td><td>1</td><td>0</td><td>1</td><td>0</td><td>1</td><td>0</td><td>1</td></tr><tr><td>TB14 (Bit 1)</td><td>0</td><td>0</td><td>1</td><td>1</td><td>0</td><td>0</td><td>1</td><td>1</td></tr><tr><td>I/O option Relay (Bit 2)</td><td>0</td><td>0</td><td>0</td><td>0</td><td>1</td><td>1</td><td>1</td><td>1</td></tr></table>NOTE: P441 is the Relay Output (TB-19, 20, 21) of the optional Digital I/O module (ESVZAL0, ESVZAL1).</td><td>bit = 0: OFF (De-energized)
bit = 1: ON (Energized)
The corresponding digital output/relay must be set to accept data from the sequencer: P140, P142, P441 = 27</td></tr>
<tr><td>P754</td><td>Segment #9 TB30
Analog Output
Value</td><td>0.00</td><td>0.00</td><td>{VDC}</td><td>10.00</td><td>TB30 configuration parameter must be set to accept this value: P150 = 10</td></tr>
<tr><td></td><td colspan="5">Segment #10</td></tr>
<tr><td>P755</td><td>Segment #10
Frequency Setpoint</td><td>0.0</td><td>-500.0</td><td>{Hz}</td><td>500.0</td><td>If P112 = 1, negative sign forces reverse direction</td></tr>
<tr><td>P756</td><td>Segment #10
Accel/Decel Time</td><td>20.0</td><td>0.0</td><td>{sec}</td><td>3600.0</td><td></td></tr>
<tr><td>P757</td><td>Segment #10
Time in current step</td><td>0.0
0</td><td>0.0
0</td><td>{P708}
{P708}</td><td>6553.5
65535</td><td>Scaling/units depend on P708
Skip segment if time = 0</td></tr>
<tr><td>P758</td><td>Segment #10
Digital Output State</td><td>0</td><td colspan="3"><table><tr><th>Value set in P758</th><th>0</th><th>1</th><th>2</th><th>3</th><th>4</th><th>5</th><th>6</th><th>7</th></tr><tr><td>Relay (Bit 0)</td><td>0</td><td>1</td><td>0</td><td>1</td><td>0</td><td>1</td><td>0</td><td>1</td></tr><tr><td>TB14 (Bit 1)</td><td>0</td><td>0</td><td>1</td><td>1</td><td>0</td><td>0</td><td>1</td><td>1</td></tr><tr><td>I/O option Relay (Bit 2)</td><td>0</td><td>0</td><td>0</td><td>0</td><td>1</td><td>1</td><td>1</td><td>1</td></tr></table>NOTE: P441 is the Relay Output (TB-19, 20, 21) of the optional Digital I/O module (ESVZAL0, ESVZAL1).</td><td>bit = 0: OFF (De-energized)
bit = 1: ON (Energized)
The corresponding digital output/relay must be set to accept data from the sequencer: P140, P142, P441 = 27</td></tr>
<tr><td>P759</td><td>Segment #10 TB30
Analog Output
Value</td><td>0.00</td><td>0.00</td><td>{VDC}</td><td>10.00</td><td>TB30 configuration parameter must be set to accept this value: P150 = 10</td></tr>
<tr><td></td><td colspan="5">Segment #11</td></tr>
<tr><td>P760</td><td>Segment #11
Frequency Setpoint</td><td>0.0</td><td>-500.0</td><td>{Hz}</td><td>500.0</td><td>If P112 = 1, negative sign forces reverse direction</td></tr>
<tr><td>P761</td><td>Segment #11
Accel/Decel Time</td><td>20.0</td><td>0.0</td><td>{sec}</td><td>3600.0</td><td></td></tr>
<tr><td>P762</td><td>Segment #11
Time in current step</td><td>0.0
0</td><td>0.0
0</td><td>{P708}
{P708}</td><td>6553.5
65535</td><td>Scaling/units depend on P708
Skip segment if time = 0</td></tr>
<tr><td>P763</td><td>Segment #11
Digital Output State</td><td>0</td><td colspan="3"><table><tr><th>Value set in P763</th><th>0</th><th>1</th><th>2</th><th>3</th><th>4</th><th>5</th><th>6</th><th>7</th></tr><tr><td>Relay (Bit 0)</td><td>0</td><td>1</td><td>0</td><td>1</td><td>0</td><td>1</td><td>0</td><td>1</td></tr><tr><td>TB14 (Bit 1)</td><td>0</td><td>0</td><td>1</td><td>1</td><td>0</td><td>0</td><td>1</td><td>1</td></tr><tr><td>I/O option Relay (Bit 2)</td><td>0</td><td>0</td><td>0</td><td>0</td><td>1</td><td>1</td><td>1</td><td>1</td></tr></table>NOTE: P441 is the Relay Output (TB-19, 20, 21) of the optional Digital I/O module (ESVZAL0, ESVZAL1).</td><td>bit = 0: OFF (De-energized)
bit = 1: ON (Energized)
The corresponding digital output/relay must be set to accept data from the sequencer: P140, P142, P441 = 27</td></tr>
<tr><td>P764</td><td>Segment #11 TB30
Analog Output
Value</td><td>0.00</td><td>0.00</td><td>{VDC}</td><td>10.00</td><td>TB30 configuration parameter must be set to accept this value: P150 = 10</td></tr>
</table>

Code		Possible Settings				IMPORTANT
No.	Name	Default	Selection			
	Segment #12					
P765	Segment #12 Frequency Setpoint	0.0	-500.0	{Hz}	500.0	If P112 = 1, negative sign forces reverse direction
P766	Segment #12 Accel/Decel Time	20.0	0.0	{sec}	3600.0	
P767	Segment #12 Time in current step	0.0 0	0.0 0	{P708} {P708}	6553.5 65535	Scaling/units depend on P708 Skip segment if time = 0
P768	Segment #12 Digital Output State	0	**Value set in P768** | **0** | **1** | **2** | **3** | **4** | **5** | **6** | **7** Relay (Bit 0) | 0 | 1 | 0 | 1 | 0 | 1 | 0 | 1 TB14 (Bit 1) | 0 | 0 | 1 | 1 | 0 | 0 | 1 | 1 I/O option Relay (Bit 2) | 0 | 0 | 0 | 0 | 1 | 1 | 1 | 1 NOTE: P441 is the Relay Output (TB-19, 20, 21) of the optional Digital I/O module (ESVZAL0, ESVZAL1).			bit = 0: OFF (De-energized) bit = 1: ON (Energized) The corresponding digital output/relay must be set to accept data from the sequencer: P140, P142, P441 = 27
P769	Segment #12 TB30 Analog Output Value	0.00	0.00	{VDC}	10.00	TB30 configuration parameter must be set to accept this value: P150 = 10
	Segment #13					
P770	Segment #13 Frequency Setpoint	0.0	-500.0	{Hz}	500.0	If P112 = 1, negative sign forces reverse direction
P771	Segment #13 Accel/Decel Time	20.0	0.0	{sec}	3600.0	
P772	Segment #13 Time in current step	0.0 0	0.0 0	{P708} {P708}	6553.5 65535	Scaling/units depend on P708 Skip segment if time = 0
P773	Segment #13 Digital Output State	0	**Value set in P773** | **0** | **1** | **2** | **3** | **4** | **5** | **6** | **7** Relay (Bit 0) | 0 | 1 | 0 | 1 | 0 | 1 | 0 | 1 TB14 (Bit 1) | 0 | 0 | 1 | 1 | 0 | 0 | 1 | 1 I/O option Relay (Bit 2) | 0 | 0 | 0 | 0 | 1 | 1 | 1 | 1 NOTE: P441 is the Relay Output (TB-19, 20, 21) of the optional Digital I/O module (ESVZAL0, ESVZAL1).			bit = 0: OFF (De-energized) bit = 1: ON (Energized) The corresponding digital output/relay must be set to accept data from the sequencer: P140, P142, P441 = 27
P774	Segment #13 TB30 Analog Output Value	0.00	0.00	{VDC}	10.00	TB30 configuration parameter must be set to accept this value: P150 = 10
	Segment #14					
P775	Segment #14 Frequency Setpoint	0.0	-500.0	{Hz}	500.0	If P112 = 1, negative sign forces reverse direction
P776	Segment #14 Accel/Decel Time	20.0	0.0	{sec}	3600.0	
P777	Segment #14 Time in current step	0.0 0	0.0 0	{P708} {P708}	6553.5 65535	Scaling/units depend on P708 Skip segment if time = 0
P778	Segment #14 Digital Output State	0	**Value set in P778** | **0** | **1** | **2** | **3** | **4** | **5** | **6** | **7** Relay (Bit 0) | 0 | 1 | 0 | 1 | 0 | 1 | 0 | 1 TB14 (Bit 1) | 0 | 0 | 1 | 1 | 0 | 0 | 1 | 1 I/O option Relay (Bit 2) | 0 | 0 | 0 | 0 | 1 | 1 | 1 | 1 NOTE: P441 is the Relay Output (TB-19, 20, 21) of the optional Digital I/O module (ESVZAL0, ESVZAL1).			bit = 0: OFF (De-energized) bit = 1: ON (Energized) The corresponding digital output/relay must be set to accept data from the sequencer: P140, P142, P441 = 27
P779	Segment #14 TB30 Analog Output Value	0.00	0.00	{VDC}	10.00	TB30 configuration parameter must be set to accept this value: P150 = 10

Code		Possible Settings				IMPORTANT
No.	Name	Default	Selection			
	Segment #15					
P780	Segment #15 Frequency Setpoint	0.0	-500.0	{Hz}	500.0	If P112 = 1, negative sign forces reverse direction
P781	Segment #15 Accel/Decel Time	20.0	0.0	{sec}	3600.0	
P782	Segment #15 Time in current step	0.0 0	0.0 0	{P708} {P708}	6553.5 65535	Scaling/units depend on P708 Skip segment if time = 0
P783	Segment #15 Digital Output State	0	**Value set in P783** | **0** | **1** | **2** | **3** | **4** | **5** | **6** | **7** Relay (Bit 0) | 0 | 1 | 0 | 1 | 0 | 1 | 0 | 1 TB14 (Bit 1) | 0 | 0 | 1 | 1 | 0 | 0 | 1 | 1 I/O option Relay (Bit 2) | 0 | 0 | 0 | 0 | 1 | 1 | 1 | 1 NOTE: P441 is the Relay Output (TB-19, 20, 21) of the optional Digital I/O module (ESVZAL0, ESVZAL1).			bit = 0: OFF (De-energized) bit = 1: ON (Energized) The corresponding digital output/relay must be set to accept data from the sequencer: P140, P142, P441 = 27
P784	Segment #15 TB30 Analog Output Value	0.00	0.00	{VDC}	10.00	TB30 configuration parameter must be set to accept this value: P150 = 10
	Segment #16					
P785	Segment #16 Frequency Setpoint	0.0	-500.0	{Hz}	500.0	If P112 = 1, negative sign forces reverse direction
P786	Segment #16 Accel/Decel Time	20.0	0.0	{sec}	3600.0	
P787	Segment #16 Time in current step	0.0 0	0.0 0	{P708} {P708}	6553.5 65535	Scaling/units depend on P708 Skip segment if time = 0
P788	Segment #16 Digital Output State	0	**Value set in P788** | **0** | **1** | **2** | **3** | **4** | **5** | **6** | **7** Relay (Bit 0) | 0 | 1 | 0 | 1 | 0 | 1 | 0 | 1 TB14 (Bit 1) | 0 | 0 | 1 | 1 | 0 | 0 | 1 | 1 I/O option Relay (Bit 2) | 0 | 0 | 0 | 0 | 1 | 1 | 1 | 1 NOTE: P441 is the Relay Output (TB-19, 20, 21) of the optional Digital I/O module (ESVZAL0, ESVZAL1).			bit = 0: OFF (De-energized) bit = 1: ON (Energized) The corresponding digital output/relay must be set to accept data from the sequencer: P140, P142, P441 = 27
P789	Segment #16 TB30 Analog Output Value	0.00	0.00	{VDC}	10.00	TB30 configuration parameter must be set to accept this value: P150 = 10
	End Segment					
P790	End Segment: Frequency Setpoint	0.0	-500.0	{Hz}	500.0	If P112 = 1, negative sign forces reverse direction
P791	End Segment: Accel/Decel Time	5.0	0.0	{sec}	3600.0	
P792	End Segment: Delay before P793, 794 & 795 activation		0.0 0	{P708} {P708}	6553.5 65535	Scaling/units depend on P708
P793	End Segment: Digital Output State		**Value set in P793** | **0** | **1** | **2** | **3** | **4** | **5** | **6** | **7** Relay (Bit 0) | 0 | 1 | 0 | 1 | 0 | 1 | 0 | 1 TB14 (Bit 1) | 0 | 0 | 1 | 1 | 0 | 0 | 1 | 1 I/O option Relay (Bit 2) | 0 | 0 | 0 | 0 | 1 | 1 | 1 | 1 NOTE: P441 is the Relay Output (TB-19, 20, 21) of the optional Digital I/O module (ESVZAL0, ESVZAL1).			bit = 0: OFF (De-energized) bit = 1: ON (Energized) The corresponding digital output/relay must be set to accept data from the sequencer: P140, P142, P441 = 27

Code		Possible Settings		IMPORTANT
No.	Name	Default	Selection	
P794	End Segment: TB30 Analog Output Value	0.00	0.00 {VDC} 10.00	TB30 configuration parameter must be set to accept this value: P150 = 10
P795	End Segment: Drive Action	0	0 Keep Running 1 Stop (based on P111) 2 Coast to Stop 3 Quick Stop (per P127) 4 Coast with DC Brake 5 Ramp with DC Brake	Recovery: Toggling the START SEQUENCE will start the cycle from 'end segment Stop' or 'end segment DC Brake'.
		⚠	**WARNING!** If P795 = 0 then toggling the start sequence input will also restart the sequencer cycle but in the interim where TB13X is open the drive will ramp to the standard or specified alternate speed source depending on the drive configuration.	

⚠ **WARNING**

If the input defined to "Start Sequence" is opened during a sequence, the drive will exit sequencer mode and will run at the specified standard or alternate speed source (dependent on drive configuration).

4.5.9.1 Sequencer Flow Diagram Left

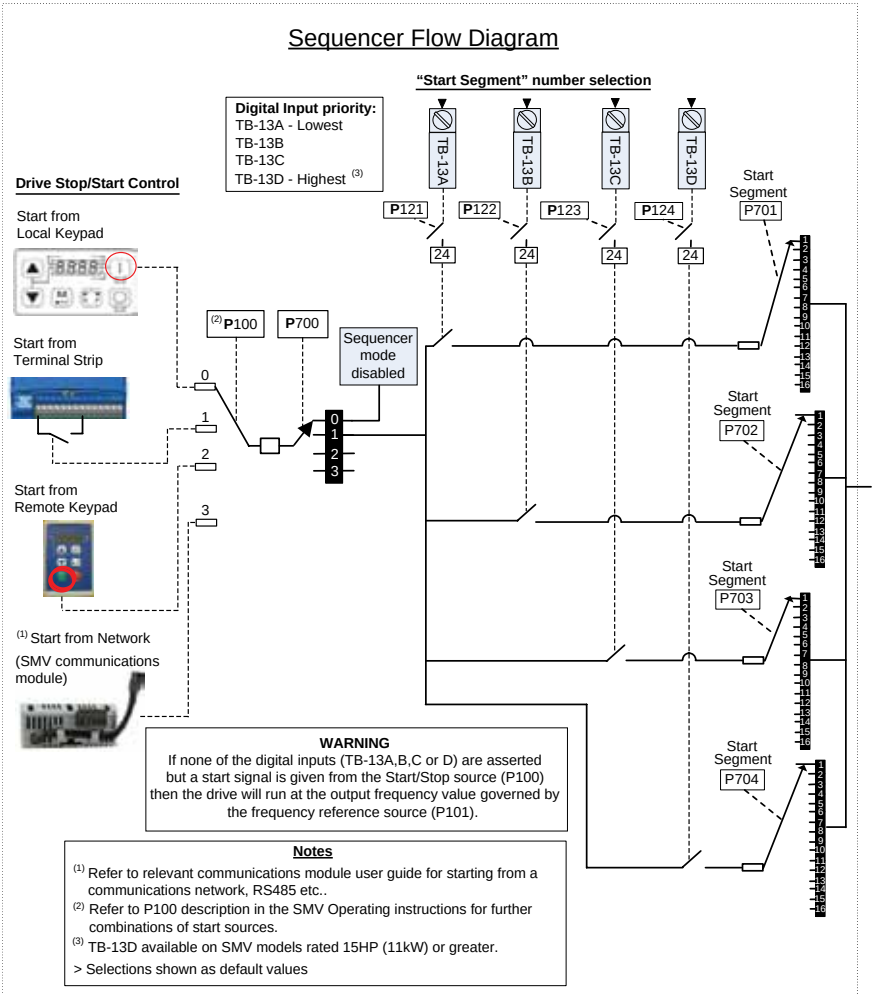

WARNING
If the input defined to "Start Sequence" is opened during a sequence, the drive will exit sequencer mode and will run at the specified standard or alternate speed source (dependent on drive configuration).

4.5.9.2 Sequencer Flow Diagram Right

Action after Stop/Start (P100) transition/digital input (if setup for sequencer mode) transition or restart after trip.	
P706	**Action**
0	Restart at beginning of sequence (pointed by TB13x)
1	Restart at beginning of current segment
2	Start at beginning of prior segment
3	Start at beginning of next segment

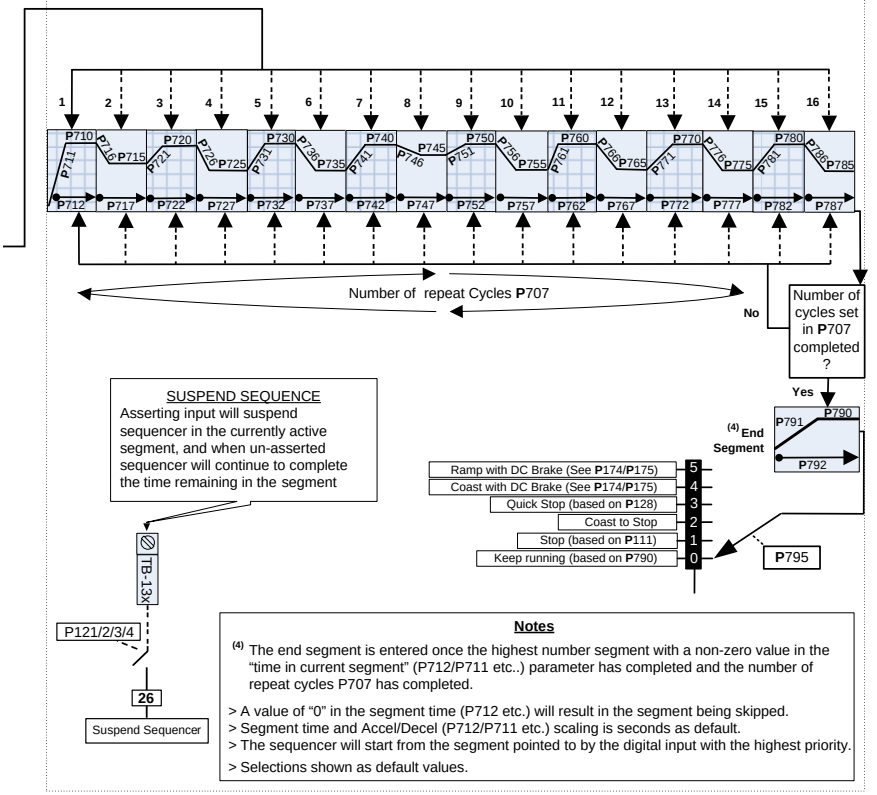

Notes

(4) The end segment is entered once the highest number segment with a non-zero value in the "time in current segment" (P712/P711 etc..) parameter has completed and the number of repeat cycles P707 has completed.

> A value of "0" in the segment time (P712 etc.) will result in the segment being skipped.
> Segment time and Accel/Decel (P712/P711 etc.) scaling is seconds as default.
> The sequencer will start from the segment pointed to by the digital input with the highest priority.
> Selections shown as default values.

4.5.9.3 Sequencer Status

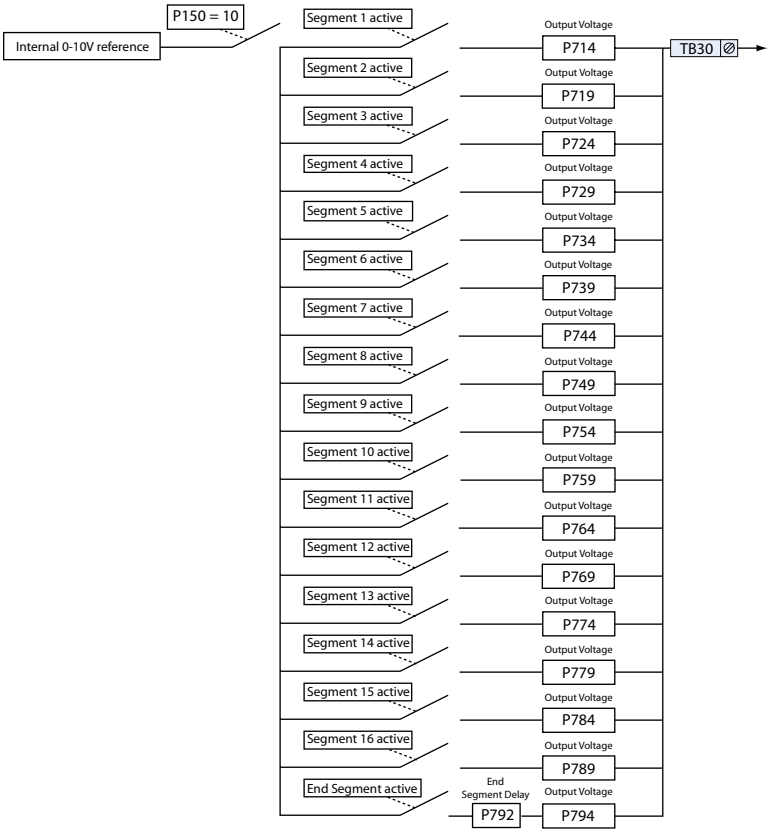

NOTE
On the “End Segment”, the output voltage is not present until after the end segment delay P792 has expired. On the other segments the output voltage is present on entry to the segment. The same is true for the digital outputs.

(1) The drive can only be restarted if the error message has been reset.

5 Troubleshooting and Diagnostics

5.1 Status/Warning Messages

Status / Warning		Cause	Remedy
br	DC-injection brake active	DC-injection brake activated • activation of digital input (P121...P124 = 18) • automatically (P110 = 2, 4...6) • automatically (P111 = 1, 3)	Deactivate DC-injection brake • deactivate digital input • automatically after P175 time has expired
bF	Drive ID warning	The Drive ID (P502) stored on the EPM does not match the drive model.	• Verify motor data (P302…P306) and perform Auto Calibration. • Set drive mode (P300) to 0 or 1 • Reset the drive (P199 to 3 or 4) and reprogram.
CAL	Motor Auto-calibration active	Refer to P300, P399	Motor Auto-calibration is being performed
cE	An EPM that contains valid data from a previous software version has been installed	An attempt was made to change parameter settings	Parameter settings can only be changed after the EPM data is converted to the current version (P199 = 5)
CL	Current Limit (P171) reached	Motor overload	• Increase P171 • Verify drive/motor are proper size for application
dEC	Decel Override	The drive has stopped decelerating to avoid tripping into **HF** fault, due to excessive motor regen (2 sec max).	If drive trips into **HF** fault: • Increase P105, P126 • Install Dynamic Braking option
Err	Error	Invalid data was entered, or an invalid command was attempted	
FCL	Fast Current Limit	Overload	Verify drive/motor are proper size for application
FSt	Flying Restart Attempt after Fault	P110 = 5,6	
GE	OEM Settings Operation warning	An attempt was made to change parameter settings while the drive is operating in OEM Settings mode.	In OEM Settings mode (P199 = 1), making changes to parameters is not permitted.
GF	OEM Defaults data warning	An attempt was made to use (or reset to) the OEM default settings (P199 = 1 or 2) using an EPM without valid OEM data.	Install an EPM containing valid OEM Defaults data
LC	Fault Lockout	The drive attempted 5 restarts after a fault but all attempts were unsuccessful (P110 = 3...6)	• Drive requires manual reset • Check Fault History (P500) and correct fault condition
PdEC	PID Deceleration Status	PID setpoint has finished its ramp but the drive is still decelerating to a stop.	
PId	PID Mode Active	Drive has been put into PID Mode.	Refer to P200
SLP	Sleep Mode is active	Refer to P240...P242	
SP	Start Pending	The drive has tripped into a fault and will automatically restart (P110 = 3...6)	To disable Auto-Restart, set P110 = 0...2
SPd	PID Mode disabled.	Drive has been taken out of PID Mode. Refer to P200.	
StoP	Output frequency = 0 Hz (outputs U, V, W inhibited)	Stop has been commanded from the keypad, terminal strip, or network	Apply Start command (Start Control source depends on P100)

(1) The drive can only be restarted if the error message has been reset.

5.2 Drive Configuration Messages

When the Mode button is pressed and held, the drive's display will provide a 4-digit code that indicates how the drive is configured. If the drive is in a Stop state when this is done, the display will also indicate which control source commanded the drive to Stop (the two displays will alternate every second).

Configuration Display			
Format = x.y.zz	**x = Control Source:** L = Local Keypad t = Terminal Strip r = Remote Keypad n = Network	**y = Mode:** S = Speed mode P = PID mode t = Torque mode C = Sequencer mode	**zz = Reference:** CP = Keypad ▲ ▼ EU = 0-10 VDC (TB-5) E I = 4-20 mA (TB-25) JG = Jog nt = Network OP = MOP P 1___P7 = Preset 1...7 0 1___ 16 = Sequencer Segment
	Example: L_S_CP = Local Keypad Start control, Speed mode, Keypad speed reference t_P_EU = Terminal Strip Start control, PID mode, 0-10 VDC setpoint reference t_C_ 12 = Terminal Strip Start control, Sequencer Operation (Speed mode), Segment #12 n_t_P2 = Network Start control, Vector Torque mode, Preset Torque #2 reference n_S_03 = Network Start control, Speed mode, Speed reference from Sequencer segment #03		
Stop Source Display			
Format = x_StP	L_StP = Stop command came from Local Keypad t_StP = Stop command came from Terminal Strip r_StP = Stop command came from Remote Keypad n_StP = Stop command came from Network		

5.3 Fault Messages

The messages below show how they will appear on the display when the drive trips. When looking at the Fault History (P500), the F_ will not appear in the fault message.

Fault		Cause	Remedy [1]
F_AF	High Temperature fault	Drive is too hot inside	• Reduce drive load • Improve cooling
F_AL	Assertion Level fault	• Assertion Level switch is changed during operation • P120 is changed during operation • P100 or P121...P124 are set to a value other than 0 and P120 does not match the Assertion Level Switch.	• Make sure the Assertion Level switch and P120 are both set for the type of input devices being used, prior to setting P100 or P121...P124. Refer to 3.2.3 and P120.
F_bF	Personality fault	Drive Hardware	• Cycle Power • Power down and install EPM with valid data • Reset the drive back to defaults (P199 = 3, 4) and then re-program • If problem persists, contact factory technical support
F_CF	Control fault	An EPM has been installed that is either blank or corrupted	
F_cF	Incompatible EPM fault	An EPM has been installed that contains data from an incompatible parameter version	
F_cFt	Forced Translation fault	An EPM from an old drive put in new drive causes drive to trip F_cFT fault.	Press [M] (mode button) twice to reset

Fault		Cause	Remedy [1]
F_dbF	Dynamic Braking fault	Dynamic braking resistors are overheating	• Increase active decel time (P105, P126, P127). • Check mains voltage and P107
F_EF	External fault	• P121…P124 = 21 and that digital input has been opened. • P121…P124 = 22 and that digital input has been closed.	• Correct the external fault condition • Make sure digital input is set properly for NC or NO circuit
F_F 1	EPM fault	EPM missing or defective	Power down and replace EPM
F_F2 … F_F 12	Internal faults		Contact factory technical support
F_Fnr	Control Configuration Fault	The drive is setup for REMOTE KEYPAD control (P100=2 or 5) but is not setup to communicate with a remote keypad	Set P400 = 1, or P600 = 1
		The drive is setup for NETWORK ONLY control (P100=3) but is not setup for network communications	Set P400 or P600 to a valid network communications protocol selection
F_FoL	TB25 (4-20 mA signal) Threshold fault	4-20 mA signal (at TB-25) drops below the value set in P164.	• Check signal/signal wire • Refer to parameters P163 and P164.
F_GF	OEM Defaults data fault	Drive is powered up with P199 =1 and OEM settings in the EPM are not valid.	Install an EPM containing valid OEM Defaults data or change P199 to 0.
F_HF	High DC Bus Voltage fault	Mains voltage is too high	Check mains voltage and P107
		Decel time is too short, or too much regen from motor	Increase active decel time (P105, P126, P127) or install Dynamic Braking option
F_ IL	Digital Input Configuration fault (P121... P124)	More than one digital input set for the same function	Each setting can only be used once (except settings 0 and 3)
		Only one digital input configured for MOP function (Up, Down)	One input must be set to MOP Up, another must be set to MOP Down
		PID mode is entered with setpoint reference and feedback source set to the same analog signal	Change PID setpoint reference (P121…P124) or feedback source (P201).
		One of the digital inputs (P121…P124) is set to 10 and another is set to 11…14.	Reconfigure digital inputs
		One of the digital inputs (P121…P124) is set to 11 or 12 and another is set to 13 or 14.	
		PID enabled in Vector Torque mode (P200 = 1 or 2 and P300 = 5)	PID cannot be used in Vector Torque mode
F_nF	Remote keypad fault	Remote keypad disconnected	Check remote keypad connections
F_LF	Low DC Bus Voltage fault	Mains voltage too low	Check mains voltage
F_n Id	No Motor ID fault	An attempt was made to start the drive in Vector or Enhanced V/Hz mode prior to performing the Motor Auto-calibration	Refer to parameters P300…P399 for Drive Mode setup and calibration.
F_nEF	Module communication fault	Communication failure between drive and Network Module.	Check module connections
F_nF 1 … F_nF9	Network Faults	Refer to the module documentation. for Causes and Remedies.	

Fault		Cause	Remedy [1]
F_0F	Output fault: Transistor fault	Output short circuit	Check motor/motor cable
		Acceleration time too short	Increase P104, P125
		Severe motor overload, due to: • Mechanical problem • Drive/motor too small for application	• Check machine / system • Verify drive/motor are proper size for application
		Boost values too high	Decrease P168, P169
		Excessive capacitive charging current of the motor cable	• Use shorter motor cables with lower charging current • Use low capacitance motor cables • Install reactor between motor and drive.
		Failed output transistor	Contact factory technical support
F_0F1	Output fault: Ground fault	Grounded motor phase	Check motor and motor cable
		Excessive capacitive charging current of the motor cable	Use shorter motor cables with lower charging current
F_PF	Motor Overload fault	Excessive motor load for too long	• Verify proper setting of P108 • Verify drive and motor are proper size for application
F_rF	Flying Restart fault	Controller was unable to synchronize with the motor during restart attempt; (P110 = 5 or 6)	Check motor / load
F_SF	Single-Phase fault	A mains phase has been lost	Check mains voltage
F_UF	Start fault	Start command was present when power was applied (P110 = 0 or 2).	• Must wait at least 2 seconds after power-up to apply Start command • Consider alternate starting method (P110).
F_FAU	TB5 (0-10V signal) Threshold fault	0-10V signal (at TB5) drops below the value set in P158.	• Check signal/signal wire • Refer to parameters P157 and P158

(1) The drive can only be restarted if the error message has been reset.

Appendix A

A.1 Permissable Cable Lengths

The table herein lists the permissable cable lengths for use with an SMV inverter with an internal EMC filter.

NOTE
This table is intended as a reference guideline only; application results may vary. The values in this table are based on testing with commonly available low-capacitance shielded cable and commonly available AC induction motors. Testing is conducted at worst case speeds and loads.

Maximum Permissible Cable Lengths (Meters) for SMV Model with Internal EMC Filters									
Mains	**Model**	**4 kHz Carrier (P166 = 0)**		**6 kHz Carrier (P166 = 1)**		**8 kHz Carrier (P166 = 2)**		**10 kHz Carrier (P166 = 3)**	
		Class A	Class B	Class A	Class B	Class A	Class B	Class A	Class B
240 V, 1-phase (2/PE)	ESV251ðð2SFð	38	12	35	10	33	5	30	N/A
	ESV371ðð2SFð	38	12	35	10	33	5	30	N/A
	ESV751ðð2SFð	38	12	35	10	33	5	30	N/A
	ESV112ðð2SFð	38	12	35	10	33	5	30	N/A
	ESV152ðð2SFð	38	12	35	10	33	5	30	N/A
	ESV222ðð2SFð	38	12	35	10	33	5	30	N/A
400/480 V,3-phase (3/PE)	ESV371ðð4TFð	30	4	25	2	20	N/A	10	N/A
	ESV751ðð4TFð	30	4	25	2	20	N/A	10	N/A
	ESV112ðð4TFð	30	4	25	2	20	N/A	10	N/A
	ESV152ðð4TFð	30	4	25	2	20	N/A	10	N/A
	ESV222ðð4TFð	30	4	25	2	20	N/A	10	N/A
	ESV302ðð4TFð	30	4	25	2	20	N/A	10	N/A
	ESV402ðð4TFð	54	5	48	3	42	2	N/A	N/A
	ESV552ðð4TFð	54	5	48	3	42	2	N/A	N/A
	ESV752ðð4TFð	54	5	48	3	42	2	N/A	N/A

NOTE: The "ðð" and "ð" symbols are place holders in the Model part number that contain different information depending on the specific configuration of the model. Refer to the SMV Type Number Designation table in section 2.2 for more information.

Notes

Notes

Lenze AC Tech Corporation
630 Douglas Street • Uxbridge, MA 01569 • USA
Sales: 800 217-9100 • Service: 508 278-9100
www.lenzeamericas.com

Document: SV01

A.R.I.

D-040 PN 16

D-040-C PN 16

Water Supply

Combination Air Valve

Description

The D-040 series Combination Air Valve has the features of both an air release valve and an air & vacuum valve.
The air release component is designed to automatically release small pockets of air to the atmosphere as they accumulate along a pipeline or piping system when it is full and operating under pressure.
The air & vacuum component is designed to automatically discharge or admit large volumes of air during the filling or draining of a pipeline or piping system. This valve will open to relieve negative pressures whenever water column separation occurs.

Applications

- Pump stations: after the pump and after the check valve.
- Downstream (after) and upstream (before) of shut-off valves.
- After deep-well pumps.
- On long constant-sloped pipeline segments.
- At peaks along the pipeline and at peaks relative to hydraulic gradient.
- At end lines.
- Before water meters.
- On strainers and filters.

D-040-C - additional applications

- Water pipelines vulnerable to vandalism and/or water theft.
- Water systems found in remote areas.

Operation

The air & vacuum component, with the large orifice, discharges air at high flow rates during the filling of the system and admits air into the system at high flow rates during its drainage and at water column separation.
High velocity air will not blow the float shut. Water will lift the float, which seals the valve.
At any time during system operation, should internal pressure of the system fall below atmospheric pressure, air will enter the system.
The smooth discharge of air reduces pressure surges and other destructive phenomena.
The intake of air in response to negative pressure protects the system from destructive vacuum conditions and prevents damage caused by water column separation. Air entry is essential to efficiently drain the system.
The air release component releases entrapped air in pressurized systems.

Without air valves, pockets of accumulated air may cause the following hydraulic disturbances:

- Restriction of effective flow due to a throttling effect as would a partially closed valve. In extreme cases this will cause complete flow stoppage.
- Obstruction of efficient hydraulic transmission due to air flow disturbances.
- Accelerate cavitation damages.
- Pressure transients and surges.
- Corrosion in pipes, fittings and accessories.
- Danger of a high-energy burst of compressed air.
- Inaccuracies in flow metering.

As the system starts to fill, the valve functions according to the following stages:

1. Entrapped air in the pipeline is discharged by the valve.
2. Liquid enters the valve, lifting the float which pushes the sealing mechanism to its sealing position.
3. Entrapped air, which accumulates at peaks and along the system, rises to the top of the valve, which in turn displaces the liquid in the valve's body.
4. The float descends, unsealing the rolling seal. The air release orifice opens and the accumulated air is released.
5. Liquid enters the valve and the float rises, pushing the rolling seal back to its sealing position.

When internal pressure falls below atmospheric pressure (negative pressure):

1. The float will immediately drop down, opening the air & vacuum and air release orifices.
2. Air will enter the system.

Main Features

- Working pressure range: 0.2 - 16 bar
- Testing pressure: 25 bar.
- Maximum working temperature: 60° C.
- Maximum intermittent temperature: 90° C.
- Reliable operation reduces water hammer incidents.
- Dynamic design allows for high velocity air discharge while preventing premature closure.
- Lightweight, small dimensions, simple and reliable structure.
- The drainage outlet enables removal of excess fluids.
- The large size of the automatic air release orifice relative to the air valve body:
  • Discharges air at high flow rates.
  • Lessens the danger of its obstruction by debris.
  • Enables the usage of the patented rolling seal mechanism, making it less sensitive to pressure differential than a direct float seal.
- The body is made of high-strength composite materials and all

operating parts are made of specially selected, corrosion- resistant materials.
- Due to its light weight, the valve may be installed on plastic piping systems, as well as other lightweight piping systems.
- D-040-C the body is protected in a metal shell for anti-vandalism/ theft applications.

Valve Selection

The air valve is available with:
- Wide size range: 1/2", 3/4", 1", 2" threaded male connections, NPT or BSPT.
- Optional ball valve tap; BSPT or NPT male connection.

Options

- The D-040 air valve is available in the following options:
• D-040 1" & 2" - reinforced nylon body and base.
• D-040 B 1" & 2" -reinforced nylon body and brass base.
• D-040 C 1" & 2" - cast iron shell and base (1" base - brass)
• D-040 ST. - reinforced nylon body and stainless steel base.
• D-040 ST ST - stainless steel body and stainless steel base.
- The D-040 LP air valve is made for very low pressure systems with a maximum working pressure of PN 6.
- The DG-10 air valve is made for low pressure systems with a maximum working pressure of PN10.

Upon ordering, please specify: model, size, working pressure, threads standard and type of liquid.

ACCESSORIES

Ball Valve

Shut-off valve: Made of brass ATSM B-124
Suitable for: D-040 1" 2"
D-040-C 1" 2"

D-040 P T 2"

D-040 P T 1"

D-040-C T 2"

D-040-C T 1"

Flanges

Made of reinforced nylon / cast ductile / st. 37

Suitable for: D-040 1" 2"

D-040-C 1" 2"

Diameter 40/50/60 Internal threads: 3/4", 1", 2"

Diameter 40/50/65 Internal threads: 3/4" 1" 2"

Diameter 50mm Internal threads: 1" 2"

Diameter 80mm Internal threads: 2" 3"

Thermal frotection Jacket

Made of polyurethane

Extension

Available with extended pipe.

One-way models

The D-040 series air valve is available as:

D040-V -With a one-way, out-only attachment, allows air discharge only, prevents air intake (all models).

D-040-I -With a vacuum breaker, in-only attachment, allows air intake only, not allowing air discharge (D-040 2" only).

D-040-NS -With a non-slam, discharge-throttling attachment, allows full air intake, throttles air discharge (D-040 2" only).

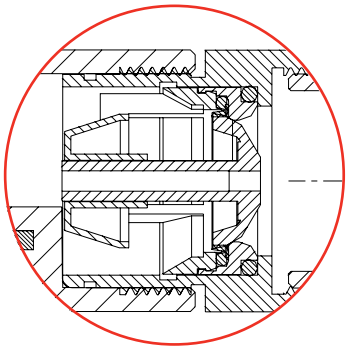

D-040-NS 2"

D-040 Non-Slam Single Orifice Add-on Component Data Table

Model	Nominal Size	Discharge orifice	Total NS area	NS orifice	Switching point	Flow at 0.4 bar
D-040 NS	2" (50mm)	37.5 mm	12.6 mm^2	4 mm	Spring loaded normally closed	17.5 m^3/h

D-040

A.R.I.

D-040 1"

D-040 2"

D-040 B 2"

D-040 ST 2"

D-040 ST ST 2"

DIMENSIONS AND WEIGHTS

Model	Dimensions mm		Connection	Weight	Orifice Area mm²	
	A	B	C	Kg.	Auto.	A / V
1/2" 3/4" 1"						
D-040	100	143	3/8" BSP Female	0.33	7.8	100
D-040 B	100	143	3/8" BSP Female	0.70	7.8	100
D-040 ST	100	143	3/8" BSP Female	0.65	7.8	100
D-040 ST ST	100	143	3/8" BSP Female	1.40	7.8	100
2"						
D-040 P	183	215	1½" BSP Female	1.10	12	804
D-040 B	183	215	1½" BSP Female	1.80	12	804
D-040 ST	183	215	1½" BSP Female	2.10	12	804
D-040 ST ST	183	215	1½" BSP Female	3.10	12	804

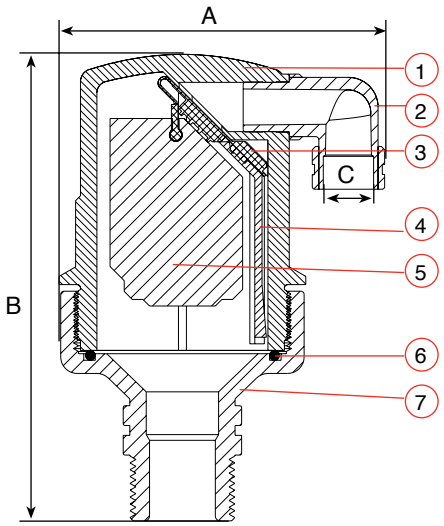

PARTS LIST AND SPECIFICATION

No.	Part	Material D-040 / B / ST	Material D-040 ST ST
1.	Body	Reinforced Nylon	St.St. SAE 316
2.	Discharge Outlet	Polypropylene	Polypropylene
3.	1/2" 3/4" 1" Rolling Seal	E.P.D.M.	Viton / BUNA-N / E.P.D.M.
	2" Rolling Seal Assembly:		
	3a. Screws	Stainless Steel	Stainless Steel
	3b. Plug Cover	Reinforced Nylon	Polypropylene / R.N.
	3c. Rolling Seal	E.P.D.M.	Viton / BUNA-N / E.P.D.M.
	3d. Plug	Reinforced Nylon	Polypropylene / R.N.
4.	Clamping Stem	Reinforced Nylon	Polypropylene / R.N.
5.	Float	Foamed Polypropylene	Foamed Polypropylene
6.	O-Ring	BUNA-N	BUNA-N
7.	Base	Reinforced Nylon / Brass ASTM B124 / St.St. SAE 316	St.St. SAE 316
Optional	Ball valve	Brass ASTM-B-124, Nickel plated.	

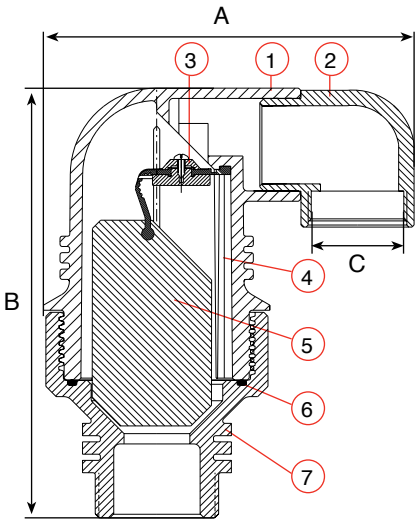

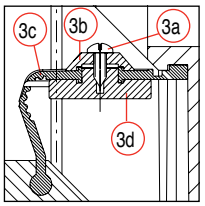

D-040-C

D-040-C 1"

D-040-C 2"

D-040-C F 2"

DIMENSIONS AND WEIGHTS

Model	Dimensions mm		Connection	Weight	Orifice Area mm²	
	A	B	C	Kg.	Auto.	A / V
1/2" 3/4" 1"						
D-040-C	125	150	3/8" BSP Female	1.2	5	82
2"						
D-040-C	203	230	1½" BSP Female	5.4	12	804
D-040-C F	214	230	1½" BSP Female	7.3	12	804

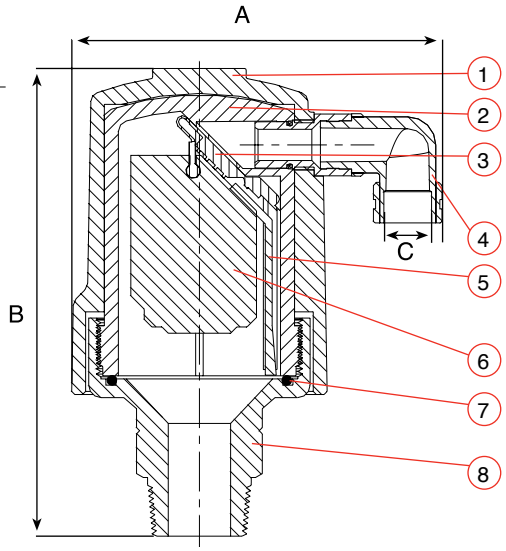

PARTS LIST AND SPECIFICATION

N0.	Part	Material
1.	Shell	Cast Iron ASTM A48 CL.35B
2.	Body	Reinforced Nylon
3.	1/2" 3/4" 1" Rolling Seal	E.P.D.M.
3.	2" Rolling Seal Assembly	
3a.	Screws	Stainless Steel
3b.	Plug Cover	Reinforced Nylon
3c.	Rolling Seal	E.P.D.M.
3d.	Plug	Reinforced Nylon
4.	Discharge Outlet	Polypropylene
5.	Clamping Stem	Reinforced Nylon
6.	Float	Foamed Polypropylene
7.	O - Ring	Buna-N
8.	Base 1/2" 3/4" 1"	Brass
	2"	Cast Iron ASTM A48 CL.35B
9.	Bolt & Nut (x4)	Steel Zinc Cobalt Coated

Optional Ball valve — Brass ASTM-B-124, Nickel plated.

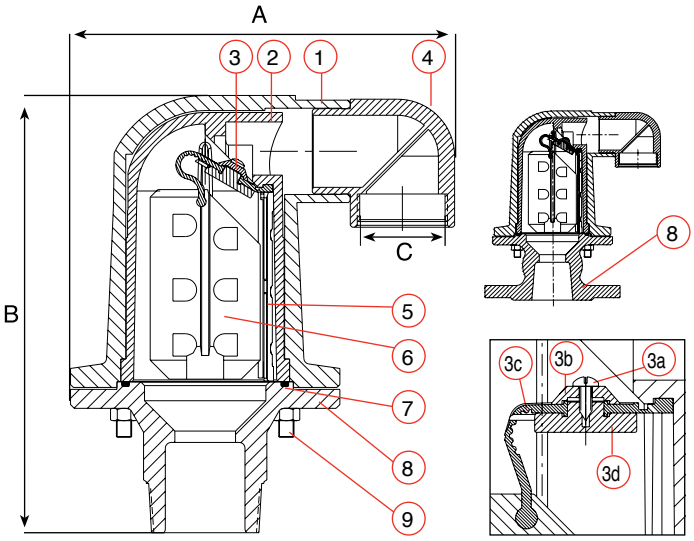

D-040

AIR AND VACUUM FLOW RATE

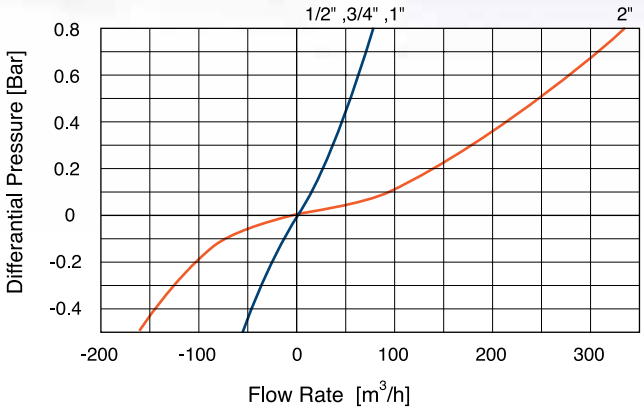

AUTOMATIC AIR RELEASE FLOW RATE

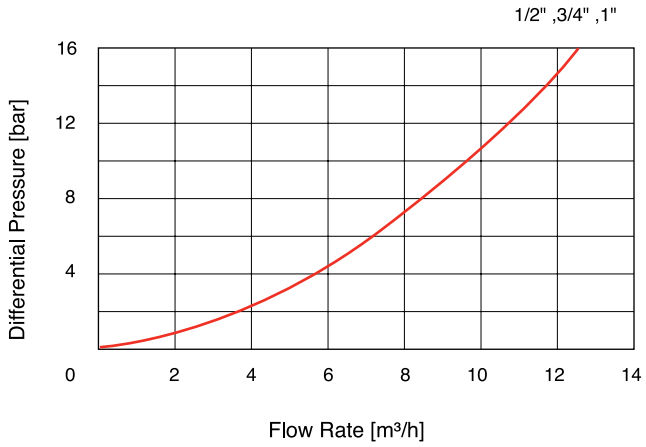

AUTOMATIC AIR RELEASE FLOW RATE

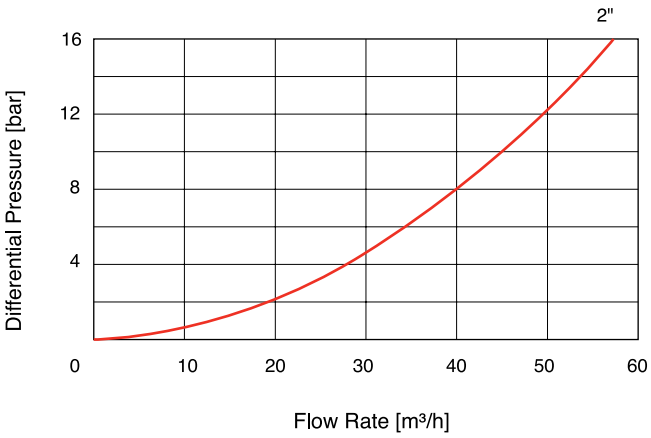

A.R.I. FLOW CONTROL ACCESSORIES Ltd. www.arivalves.com ari@ari.co.il Tel: 972-4-6761988

A.R.I. FLOW CONTROL ACCESSORIES Ltd. reserves the right to make product changes without prior notice. To insure receiving updated information on parts specifications, please call the export dept. at the A.R.I. factory. A.R.I. FLOW CONTROL ACCESSORIES Ltd. shall not be held liable for any errors. All rights reserved.

MAINTENANCE INSTRUCTIONS

COMBINATION AIR VALVE
BARAK, MODEL D-040-C 1”

GENERAL INSTRUCTIONS

- Routine service is an integral part of the standard procedure for maintenance of a water supply system.
- Recommended routine maintenance– once or twice a year, according to the quality and type of the fluids in the system.

PROCEDURE

1. Close the service valve under the valve base before servicing.
2. Unscrew and remove the metal shell assembly (1-6) from the base (8) by turning the metal shell (2) counterclockwise with the aid of a belt wrench.
3. Remove the clamping stem (5) from inside the valve body (1) and carefully pull out the float (6) with the attached rolling seal (3).
4. Check the soundness of the rolling seal (3) by washing it with water and examining it. Note: Replace the rolling seal (3) in case it is torn.
5. Wash the body (1) and the float (6) with clean water and examine for damage. Note: Replace the float (6) if it is damaged.
6. Clean the discharge elbow (4) to remove insects and debris.
7. Return the float (6) with the attached rolling seal (3) to its original position in the valve body (1) and lock them into place with the clamping stem (5).
8. Return the metal shell assembly (1-6) to the base (8) and close by turning it clockwise. Note: First make sure the O-ring (7) is seated properly in the base of the valve (8).
9. Remember to open the service valve after the servicing.

PARTS SPECIFICATION

NO.	DESCRIPTION	MATERIAL
1.	Metal Shell	Cast Iron
2.	Valve Body	Reinforced Nylon
3.	Rolling Seal	E.P.D.M.
4.	Discharge Elbow	Polypropylene
5.	Clamping Stem	Reinforced Nylon
6.	Float	Foamed Polypropylene
7.	O-Ring	BUNA-N
8.	Base	Brass

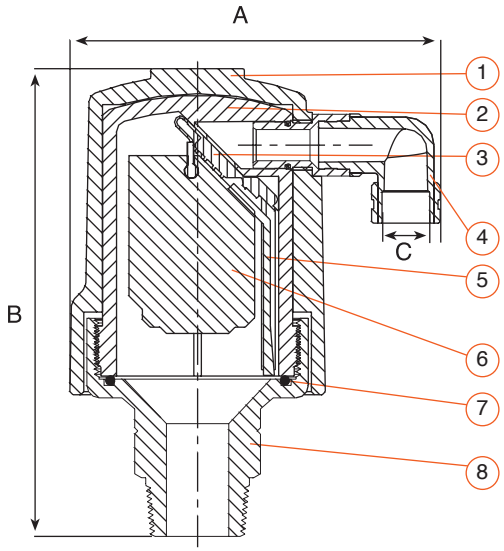

TROUBLESHOOTING

SYMPTOM	CAUSE	CORRECTIVE ACTION
Right angle outlet is broken.	Valve was hit or mishandled.	Easy to replace: gently pry off the outlet with screwdriver Pressure insert the new right angle using a plastic hammer. Replacement part can be ordered from A.R.I. **Note:** The part is not mandatory for the function of the valve.
Outlet thread size needed in order to attach a drainage hose.	End user needs to connect a drainage pipe from the valve outlet in order to drain excess water.	D-040 has 3/8" female thread. 2" D040 has 1¼" female thread. End of pipe must be left open in order for valve to function.
Built-in plastic screen is not accepted by health department.	This is an above ground installation.	ARI offers an approved 316 stainless screen that threads into the 2" valve. GSM in California has made one for the 1" valve.
Plastic body and/or base not acceptable.	A change in product spec. A change in designer preference.	Offer the cast iron or stainless steel body. Also offer the bronze or stainless steel base.
Valve spits water.	This is normal at start up and during pressure test. Could be debris in the sealing mechanism.	Open the valve. Clean and check integrity of the sealing mechanism and O-ring seals.
Valve is continuously leaking.	Line pressure issues (inadequate pressure) or debris lodged in seal or o-rings.	Check line pressure. It needs at least 3 psi to seal tight. Is the valve on a booster pump? Can be installation issue if valve is level with the water level in a tank - there is no pressure to seal. Open valve and clean sealing mechanism, check the rolling seal and o-rings for wear or tear. Replace if necessary.
Valve leaks from threads.	Plastic threads stripped.	Check for cross-threading. Replace bottom of valve or offer the cast metal base.

MAINTENANCE INSTRUCTIONS

COMBINATION AIR VALVE
BARAK, MODEL D-040-C 2”

GENERAL INSTRUCTIONS

- Routine service is an integral part of the standard procedure for maintenance of a water supply system.
- Recommended routine maintenance– once or twice a year, according to the quality and type of the fluids in the system.

PROCEDURE

1. Close the service valve under the valve base before servicing.
2. Loosen and remove the four bolts and nuts (9).
3. Remove the metal shell (2) and enclosed valve body (1).
4. Remove the clamping stem (5) from the valve body (1) and carefully pull out the float (6) with the attached rolling seal assembly (3).
5. Check the soundness of the rolling seal assembly (3) by washing it with water and examining it. Note: Replace the seal assembly (3) in case it is torn.
6. Wash the body (1) and the float (6) with clean water and examine for damage. Note: Replace the float (6) if it is damaged.
7. Clean the drainage elbow (4) to remove insects and debris.
8. Return the float (6) with the attached rolling seal assembly (3) to its original position in the valve body (1) and lock them into place with the clamping stem (5).
9. Place the metal shell (2) and enclosed valve body (1) on the base (8). Note: First make sure the O-ring (7) is seated properly in the base of the valve (8).
10. Attach by inserting and tightening the four bolts and nuts (9).
11. Remember to open the service valve after the servicing.

PARTS SPECIFICATION

NO.	DESCRIPTION	MATERIAL
1.	Metal Shell	Cast Iron
2.	Valve Body	Reinforced Nylon
3.	Rolling Seal Assembly	
4.	Drainage Elbow	Polypropylene
5.	Clamping Stem	Reinforced Nylon
6.	Float	Foamed Polypropylene
7.	O-Ring	BUNA-N
8.	Base	Brass
9.	Bolt & Nut	Cast Iron

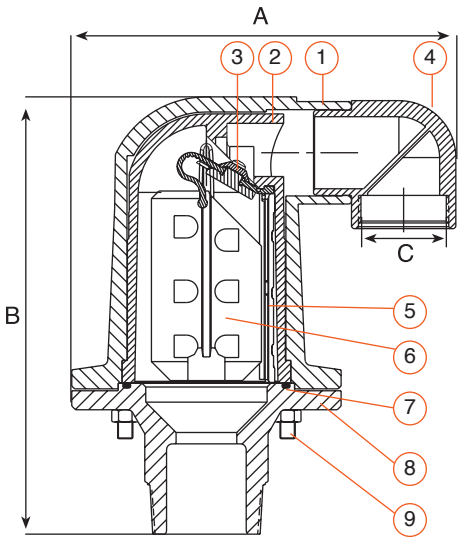

TROUBLESHOOTING

SYMPTOM	CAUSE	CORRECTIVE ACTION
Right angle outlet is broken.	Valve was hit or mishandled.	Easy to replace: gently pry off the outlet with screwdriver Pressure insert the new right angle using a plastic hammer. Replacement part can be ordered from A.R.I. **Note:** The part is not mandatory for the function of the valve.
Outlet thread size needed in order to attach a drainage hose.	End user needs to connect a drainage pipe from the valve outlet in order to drain excess water.	D-040 has 3/8" female thread. 2" D040 has 1¼" female thread. End of pipe must be left open in order for valve to function.
Built-in plastic screen is not accepted by health department.	This is an above ground installation.	ARI offers an approved 316 stainless screen that threads into the 2" valve. GSM in California has made one for the 1" valve.
Plastic body and/or base not acceptable.	A change in product spec. A change in designer preference.	Offer the cast iron or stainless steel body. Also offer the bronze or stainless steel base.
Valve spits water.	This is normal at start up and during pressure test. Could be debris in the sealing mechanism.	Open the valve. Clean and check integrity of the sealing mechanism and O-ring seals.
Valve is continuously leaking.	Line pressure issues (inadequate pressure) or debris lodged in seal or o-rings.	Check line pressure. It needs at least 3 psi to seal tight. Is the valve on a booster pump? Can be installation issue if valve is level with the water level in a tank - there is no pressure to seal. Open valve and clean sealing mechanism, check the rolling seal and o-rings for wear or tear. Replace if necessary.
Valve leaks from threads.	Plastic threads stripped.	Check for cross-threading. Replace bottom of valve or offer the cast metal base.

OPERATING INSTRUCTIONS AND OWNER'S MANUAL

READ INSTRUCTIONS CAREFULLY: Read and follow all instructions. Place instructions in a safe place for future reference. Do not allow anyone who has not read these instructions to assemble, light, adjust or operate the heater.

INSTALLER: Leave this manual with the appliance. CONSUMER: Retain this manual for future reference.

UNVENTED LP-GAS FIRED ROOM HEATER

Plaque Heaters

MHVFRD20LPBT
(BLOWER INCLUDED)
MHVFRD20LPT
(BLOWER SOLD SEPARATE)

Blue Flame Heaters

MHVFBF20LPBT
(BLOWER INCLUDED)
MHVFBF20LPT
(BLOWER SOLD SEPARATE)

MHVFRD30LPBT
(BLOWER INCLUDED)
MHVFRD30LPT
(BLOWER SOLD SEPARATE)

MHVFBF30LPBT
(BLOWER INCLUDED)
MHVFBF30TLPT
(BLOWER SOLD SEPARATE)

⚠ **WARNING:** If the information in this manual is not followed exactly, a fire or explosion may result causing property damage, personal injury, or loss of life.

- Do not store or use gasoline or other flammable vapors and liquids in the vicinity of this or any other appliance.
- WHAT TO DO IF YOU SMELL GAS
  - Shut off gas supply
  - Do not try to light any appliance
  - Do not touch an electrical switch; do not use any phone in your building.
  - Immediately call your gas supplier from a neighbor's phone. Follow the gas supplier's instructions.
  - If you cannot reach your gas supplier, call the fire department.
- Installation and service must be performed by a qualified installer, service agency, or the gas supplier.

⚠ **WARNING**: This is an unvented gas-fired heater. It uses air (oxygen) from the room in which it is installed. Provisions for adequate combustion and ventilation air must be provided. Refer to Fresh Air for Combustion and Ventilation section on page 4 of this manual.

⚠ **WARNING**: Improper installation, adjustment, alteration, service or maintenance can cause injury or property damage. Refer to this manual for correct installation and operational procedures. For assistance or additional information consult a qualified installer, service agency, or gas supplier.

This appliance may be installed in an aftermarket permanently manufactured (mobile) home, where not prohibited by local codes. This appliance is only for use with the type of gas indicated on the rating plate. This appliance is not convertible for use with any other gas.

⚠ WARNINGS

IMPORTANT: Read this owner's manual carefully and completely before trying to assemble, operate, or service this heater. Improper use of this heater can cause serious injury or death from burns, fire, explosion, electrical shock, and carbon monoxide poisoning.

⚠ WARNING: This appliance is equipped for propane gas. Field conversion is not permitted.

⚠ WARNING: Do not use any accessory not approved for use with this heater.

⚠ WARNING: Any change to this heater or its controls can be dangerous.

- Do not place clothing or other flammable material on or near the appliance.
- Due to high temperatures, heater should be kept out of traffic and away from furniture and draperies.
- Surface of heater becomes very hot when running. Keep children and adults away from hot surfaces to avoid burns or clothing ignition. Heater will remain hot for a time after shutdown. Allow heater surfaces to cool before handling.
- Young children should be carefully supervised when they are in the same room with heater.
- Make sure grille guard is in place before running heater. If screen or grille guard is removed for servicing it must be replaced prior to operating the heater.
- Keep the appliance area clear and free from combustible materials, gasoline, and other flammable vapors and liquids.
- Children and adults should be alerted to the hazard of high surface temperature and should stay away to avoid burns or clothing ignition.
- Any safety screen or guard removed for servicing an appliance must be replaced prior to operating the heater

CONTENTS

WARNINGS 2
SPECIFICATIONS 3
PRECAUTIONS 3
IGNITION SYSTEM BATTERY INSTALLATION 4
BLOWER FAN CONTROL SWITCH OPERATION 4
DETERMINING THE TYPE OF HEATER LOCATION SPACE 5
INSTALLATION 6
FASTENING HEATER TO WALL 7
FLOOR MOUNTING AWAY FROM WALL 8
CONNECTING TO GAS SUPPLY 8
OPERATING YOUR HEATER 10
CLEANING AND MAINTENANCE 11
TROUBLESHOOTING 14
EXPLODED-VIEW PARTS DRAWING 16
PARTS LIST 17
WARRANTY 20

SOCIAL MEDIA

In order to provide the best service possible Mr. Heater is now giving you more ways to get in touch with us:

WEBSITE: Mr. Heater's full line of product are now at:
WWW.MRHEATER.COM

FACEBOOK: Find us on Facebook

TWITTER: Find us on twitter

YouTube: There are now informational videos on YouTube.

CAUTION: Never connect heater directly to the Propane supply. This heater requires an external regulator (not supplied). Install the external regulator between the heater and Propane/LP supply.

The installer must supply an external regulator. The external regulator will reduce the incoming gas pressure to between 11 and 14 inches of water. If you do not reduce incoming gas pressure heater regulator damage could occur. Install external regulator with the vent pointing down. Pointing the vent down protects it from freezing rain or sleet.

SPECIFICATIONS

****Operating heater above elevations of 4,500 feet could cause pilot/ODS to shutdown heater.****

MODEL	MHVFRD20BT/ MHVFRD20T LP	MHVFRD30TB / MHVFRD30T LP	MHVFBF20TB / MHVFBF20T LP	MHVFBF30TB / MHVFBF30T LP
BTU (Available)	18,000	30,000	20,000	30,000
Type of Gas	LP-Gas Only	LP-Gas Only	LP-Gas Only	LP-Gas Only
Ignition	Battery ignitor (1-AA)	Battery ignitor (1-AA)	Battery ignitor (1-AA)	Battery ignitor (1-AA)
Pressure Regulator Setting	10 Inches of Water	10 Inches of Water	10 Inches of Water	10 Inches of Water
Inlet Gas Pressure (Maximum)	14 Inches of Water	14 Inches of Water	14 Inches of Water	14 Inches of Water
Inlet Gas Pressure (Minimum)	11 Inches of Water	11 Inches of Water	11 Inches of Water	11 Inches of Water
Electrical Rating/Blower	120V, 60Hz, 1 Ø	120V, 60Hz, 1 Ø	120V, 60Hz, 1 Ø	120V, 60Hz, 1 Ø
Thermostatic Control	Yes	Yes	Yes	Yes
Clearances: inches (mm)				
Top	36” (915cm)	36” (915cm)	36” (915cm)	36” (915cm)
Sides	10” (254cm)	10” (254cm)	10” (254cm)	10” (254cm)
Floor (min to top of carpet)	3” (76cm)	3” (76cm)	3” (76cm)	3” (76cm)
Fabric / flammable objects	36” (915cm)	36” (915cm)	36” (915cm)	36” (915cm)

PRECAUTIONS:

1. 20,000 BTU or 30,000 BTU may not be installed in a bedroom or bathroom, or any place where a strong wind would shut down the appliance.
2. This heater needs outside ventilation air to run properly. The Oxygen Depletion Sensor (ODS) safety shutoff system shuts down the heater if not enough fresh air is available. See *Fresh Air for Combustion and Ventilation*, pages 5 through 6.

⚠ **WARNING:** An unvented heater having an input of more than 10,000 Btu/hr (2 931W) shall not be installed in a bedroom or bathroom.

3. Keep all air openings in heater clear, free of debris or any blockage. This will insure that enough air for proper combustion enters the heater.
4. If heater shuts off, do not relight until you provide fresh, outside air. If heater keeps shutting off, it requires servicing.
5. Turn off and unplug heater and let cool before servicing. Only a qualified service person should service and repair heater.
6. Do not run heater:
   - Where flammable liquids or vapors are used or stored
   - During dusty conditions.
7. Before using furniture polish, wax, carpet cleaner or similar products, turn heater off. If heated the vapors from these products may create a white powder residue within burner box or on adjacent walls or furniture.
8. Do not use heater if any part has been underwater. Immediately call a qualified service technician to inspect the room heater and to replace any part of the control system and any gas control which has been underwater.
9. **Operating heater above elevations of 4,500 feet could cause pilot/ODS to shutdown heater.**
10. Always run heater with control knob in a locked position. Never set control knob between locked positions. Poor combustion and higher levels of carbon monoxide may result if control knob is left between locked positions.

DANGER: Carbon monoxide poisoning may lead to death.

Carbon Monoxide Poisoning:

Early signs of carbon monoxide poisoning resemble the flu, with headaches, dizziness, or nausea. If you have these signs, the heater may not be working properly. Get fresh air at once! Have heater serviced. Some people are more affected by carbon monoxide than others. These include pregnant women, persons with heart or lung disease or anemia, those under the influence of alcohol, and those at high altitudes.

Propane/LP Gas:

Propane/LP gas is odorless. An odor making agent is added to propane/LP gas. The odor helps you detect a Propane/LP gas leak. However the odor added to propane/LP gas may be present even though no odor exists. Make certain you read and understand all warnings. Keep this manual for reference. It is your guide to safe and proper operation of this heater.

Product Features

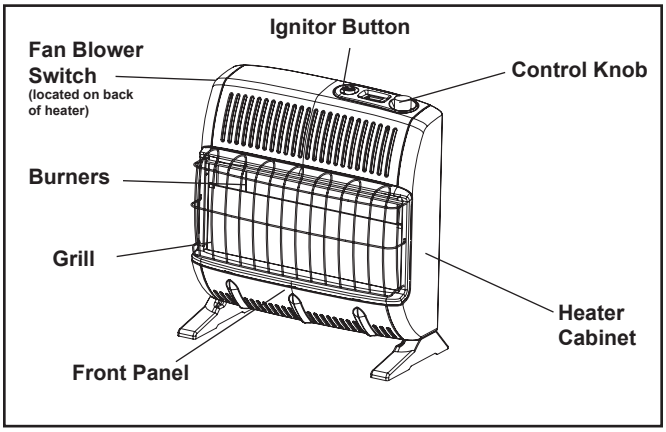

Figure 1

SAFETY DEVICE

This heater has a pilot with an Oxygen Depletion Sensor (ODS) safety shut off system. The ODS/pilot shuts off the heater if there is not enough fresh air.

IGNITION SYSTEM / BATTERY INSTALLATION

– The heater is equipped with an electronic manual ignitor. This system requires no matches, or other source to light heater, but does require one AA battery to operate ignitor. **(AA Battery included)**.

To install or replace battery unscrew the ignitor cap (red button), insert battery positive (+) terminal up and replace cap.

(AA Battery included)

THERMOSTATIC CONTROL

These heaters have a control valve with a thermostat sensing bulb. This results in the greatest heater comfort and may result in lower bills.

BLOWER FAN CONTROL SWITCH OPERATION

These heaters also include an electrical blower. The blower switch has three positions: MANUAL, OFF and AUTO. In AUTO, the blower will turn on and off as the heater cycles on and off. On MANUAL, the blower will run continuously. To turn blower off, use the OFF position.

LOCAL CODES

Install and use heater with care.

Installation must conform to local codes or in the absences of local codes, use the latest edition of National Fuel Gas Code ANSI Z223.1/NFPA 54.

UNPACKING

1. Remove heater from carton.
2. Remove all protective packaging applied to heater for shipment.
3. Check heater for any shipping damage. If heater is damaged, promptly inform dealer where you bought heater.

FRESH AIR FOR COMBUSTION AND VENTILATION

⚠ **WARNING**: This heater shall not be installed in a room or space unless the required volume of indoor combustion air is provided by the method described in the *National Fuel Gas Code, ANSI Z223.1/NFPA 54*. Read the following instructions to insure proper fresh air for this and other fuel-burning appliances in your home.

ESTABLISHING ADEQUATE VENTILATION

The following are excerpts from *National Fuel Gas Code, NFPA 54/ ANSI Z223.1, Section 5.3, Air for Combustion and Ventilation*. All spaces in homes fall into one of the three following ventilation classifications:

1. Unusually Tight Construction
2. Unconfined Space
3. Confined Space

This heater must not be installed in a confined space or unusually tight construction unless provisions are provided for adequate combustion and ventilation air. The information on pages 4 through 6 will help you classify your space and provide adequate ventilation.

Unusually Tight Construction

If your home meets all of the three following criteria you must provide additional fresh air. See *Ventilation Air from Outdoors*, page 6.

Unusually tight construction is defined as construction where:

a. Walls and ceilings exposed to the outside atmosphere have a continuous water vapor retarder with a rating of one perm (6×10^{-11} kg per pa-sec-m^2) or less with openings gasketed or sealed and

b. Weather stripping has been added on operable windows and doors, and

c. Caulking or sealants are applied to areas such as joints around windows and door frames, between wall-ceiling joints, between wall panels, at penetrations for plumbing, electrical, and gas lines, and at other openings.

If your home does not meet all of the three criteria above, see *Determine the Type of Heater Location Space*, page 5.

Confined Space and Unconfined Space

The *National Fuel Gas Code, NFPA 54/ ANSI Z223.1* defines a confined space as a space whose volume is less than 50 cubic feet per 1,000 Btu per hour (4.8 m^3 per kW) of the aggregate input rating of all appliances installed in that space, and an unconfined space as a space whose volume is not less than 50 cubic feet per 1,000 Btu per hour (4.8 m^3 per kW) of the aggregate input rating of all appliances installed in that space. Rooms communicating directly with the space in which the appliances are installed*, through openings not furnished with doors, are considered a part of the unconfined space.

*Adjoining rooms are communication only if there are door less passageways or ventilation grills between them.

DETERMINING THE TYPE OF HEATER LOCATION SPACE:

Use this method to determine if you have a confined or unconfined space.

Note: the space includes the room in which you install heater plus any adjoining rooms with doorless passageways or ventilation grills between the rooms.

1. Find the volume of the space by multiplying room length x width x height.

Example: Space size 18ft (length) x 18ft. (width) x 8ft. (height) = 2592

If additional ventilation to adjoining room is supplied with grills or openings, add the volume of these rooms to the total volume of the space.

2. Divide the space volume by 50 cubic feet to determine the maximum Btu/hr the space can support.

Example: 2592 cu.ft. (volume of space) / 50 cu.ft. = 51.8 or 51,800 (maximum Btu/hr the space can support)

> ⚠ **WARNING:** If the area in which the heater may be operated is smaller than defined as an unconfined space or if the building is of unusually tight construction, provide adequate combustion and ventilation air by the methods described in the *National Fuel Gas Code, NFPA 54/ ANSI Z223.1,* Section 5.3 or applicable local codes.

3. Add the Btu/hr of all the fuel-burning appliances in the space such as, Vent–free heater, Gas water heater, Gas furnace, Vented gas heater, Gas fireplace logs, and Other gas appliances*

   *Do not include direct-vent gas appliances. Direct-vent draws combustion air from the outdoors and vents to the outdoors.

Example:	Gas water heater	40,000 Btu/hr
	Vent Free Heater +	20,000 Btu/hr
	Total	=60,000 Btu/hr

4. Compare the maximum Btu/hr the space can support with the actual amount of Btu/hr used.

   Example: 51,800 Btu/hr (maximum Btu/hr the space can support)

   60,000 Btu/hr (Actual amount of Btu/hr used)

   The space in the above example is a confined space because the actual Btu/hr used is more than the maximum Btu/hr the space can support.

You must provide additional fresh air. Your options are as follows:

A. Rework worksheet, and the space of an adjoining room. If the extra space provides an unconfined space, remove door to adjoining room or add ventilation grills between the rooms. See Ventilation Air From Inside Building (Figure 2).

B. Vent room directly to the outdoors. See Ventilation Air From Outdoors (Figure 3).

C. Install a lower Btu/hr heater if lower Btu/hr size makes room unconfined.

   If actual Btu/hr used is less than the maximum Btu/hr the space can support, the space is an unconfined space. You will need no additional fresh air ventilation.

VENTILATION AIR

Ventilation from Inside Building

This fresh air would come from an adjoining unconfined space. When ventilation to an adjoining unconfined space, you must provide two permanent openings: one within 12” of the ceiling and one within 12” of the floor on the wall connecting the two spaces (see options 1 & 2 of fig. 2). You can also remove door into adjoining room (see option3, fig 2). Follow the National Fuel Gas Code NFPA 54/ ANSI Z223.1, Section 5.3, Air for Combustion and Ventilation for required size of ventilation grills or ducts.

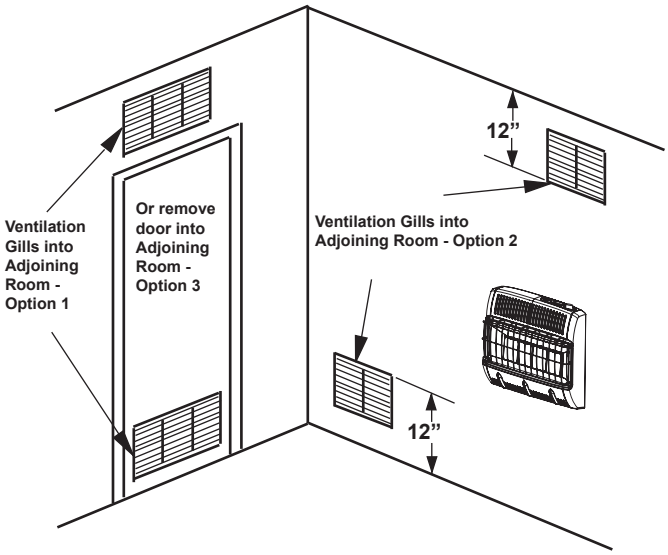

Figure 2.

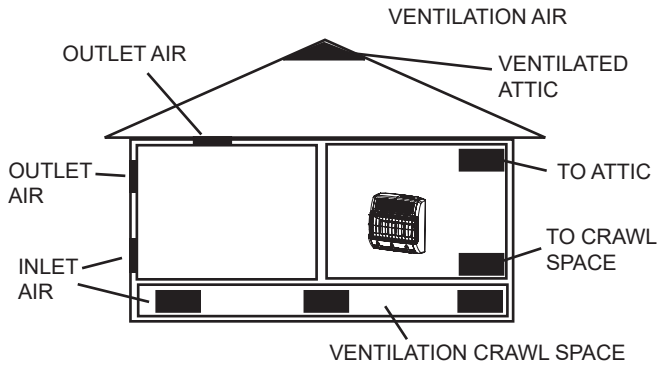

Figure 3.

⚠ **WARNING:** Rework worksheet, adding the space of the adjoining unconfined space. The combined space must have enough fresh air to supply all appliance in both spaces.

Ventilation from Outdoors

If necessary provide extra fresh air by using ventilation grills or ducts. Connect these items directly to the outdoors or spaces open to the outdoors. These include attics* and crawl spaces. Follow the National Fuel Gas Code NFPA 54/ ANSI Z223.1, Section 5.3, Air for Combustion and Ventilation for required size of ventilation grills or ducts.

***IMPORTANT:** Do not provide openings for inlet or outlet into attic. If attic has a thermostat-controlled power vent, heated air entering the attic will activate the power vent.

IMPORTANT: Vent-free heaters add moisture to the air. Although this is beneficial, installing heater in rooms without enough ventilation air may cause mildew to form from too much moisture. See Fresh Air for Combustion and Ventilation, pages 5 through 6.

INSTALLATION

⚠ **WARNING:** Any change to this heater or its controls can be dangerous.

NOTICE: This appliance is intended for supplemental heating. Use this heater along with your primary heating system. Do not install this heater as your primary heat source. If you have a central heating system, you may run system's circulating blower while using heater. This will help circulate the heat throughout the house. In the event of a power outage, you can use this heater as your primary heat source for the duration of the outage.

⚠ **WARNING:** A qualified service person must install heater. Follow all local codes.

CHECK GAS TYPE

Use only *LP-gas.* If your gas supply is not *LP-gas*, do not install heater. Call dealer where you bought heater for proper type heater.

THIS INSTALLATION REQUIRES:

Before installing heater, make sure you have the items listed below:

- Piping (check local codes)
- Sealant (resistant to LP_Gas)
- Equipment shutoff valve*
- Ground joint union
- Test gauge connection*
- Sediment trap
- Tee joint
- Pipe wrench

*A CSA/AGA certified equipment shutoff valve with 1/8" NPT tap is an acceptable alternative to test gauge connection. Purchase a CSA/AGA certified equipment shutoff valve from your dealer.

LOCATING HEATER

This heater is designed to be mounted on the wall. The heater can also be located on a non-combustible floor, away from a wall by using the floor mounting stands included with the heater. If installed on combustible flooring such as carpeting, tile or other combustible material other than wood flooring, the heater must be placed on a wood panel the full width and depth of the appliance.

For convenience and efficiency, install the heater:

- Where there is easy access for operation, inspection, and service
- In the coldest part of the room.
- If planning to use fan, locate heater near an electrical outlet.

CAUTION: If you install the heater in a home garage: Heater pilot and burner must be at least 18 inches above floor. Locate heater where moving vehicle will not hit it.

CAUTION: This heater creates warm air currents. These currents move heat to wall surfaces next to heater. Installing heater next to vinyl or cloth wall covering or operating heater where impurities (such as tobacco smoke, aromatic candles, cleaning fluids, oil or kerosene lamps, etc.) are present in the air may discolor walls.

⚠ **WARNING:** Never install the heater:

- In a bedroom (RD20LPT, RD30LPT, BF20LPT or BF30LPT)
- In a recreational vehicle·.
- Where curtains, furniture, clothing, or other flammable objects are less than 36 inches from the front, top, or sides of the heater.
- As a fireplace insert
- In high-traffic areas
- In windy or drafty areas

⚠ **WARNING:** Heater must be mounted to maintain the minimum clearances shown in Figure 4. If possible, provide greater clearances from the floor, ceiling, and joining walls.

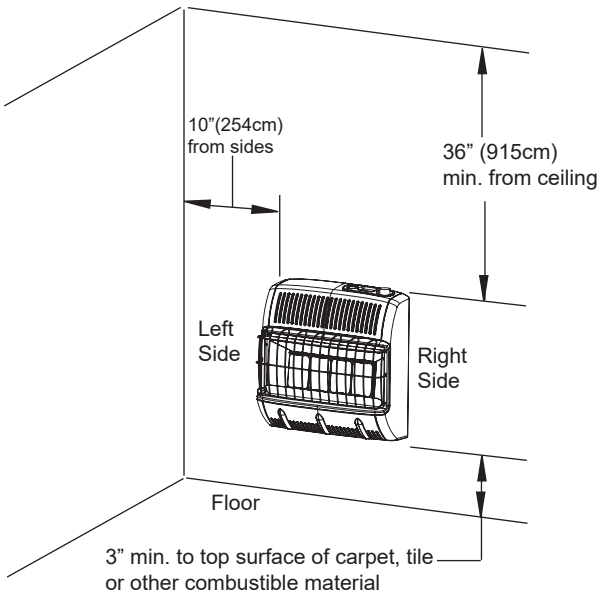

Figure 4

FASTENING HEATER TO WALL

Mounting Bracket

The mounting bracket in located on the back panel of heater (see figure 5). It has been taped there for shipping. Remove mounting bracket from back panel.

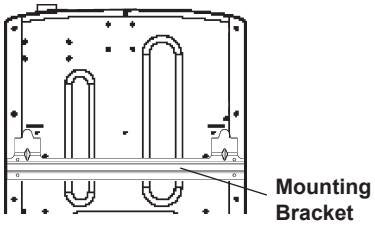

Figure 5

Removing Front Panel of Heater

1. Remove (4) screws total there are (2) screws on either side of the heater (Figure 6).
2. Pull the front panel and back panel apart.

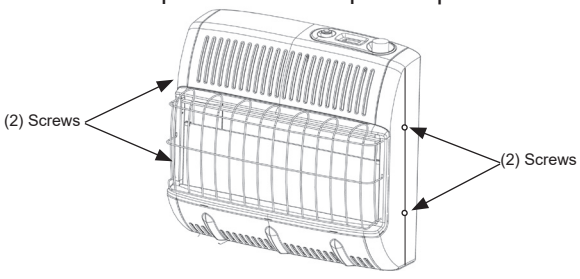

Figure 6

Attaching Mounting Bracket to Wall

Use holes on each end of mounting bracket to attach bracket to wall. These holes are 16 inches apart. Attach mounting bracket to wall in one of two following ways.

1. Attach to wall studs
2. Attach to wall anchor

Attaching to Wall Stud:

This way is the best providing the strongest mounting in wood frame houses.

Attaching to Wall Anchor:

This way allows you to attach mounting bracket to hollow walls (wall areas between studs) or to solid walls (concrete or masonry).

Decide which way best suits your needs. Either method will provide a secure hold for the mounting bracket.

1. Tape mounting bracket to wall where heater will be located. Make sure mounting bracket is level. For wall stud mounting locate one end of the mounting bracket over a wall stud.

> ⚠ **WARNING:** Maintain minimum clearances shown in figure 7. If you can, provide greater clearances from the floor and joining wall.

2. Mark screw locations on wall (see figure 7).
3. Remove tape and mount bracket from wall.

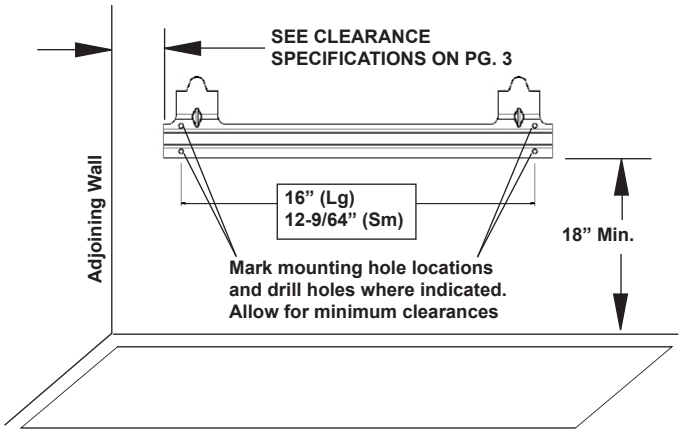

Figure 7

Attaching to Wall Stud:

For attaching mounting bracket to wall studs

1. Drill holes at marked locations using 9/64” drill bit.
2. Place mounting bracket onto wall. Line up holes on each end of bracket with hole drilled in wall.
3. Insert mounting screws through bracket and into wall studs.
4. Tighten screws until mounting bracket is firmly fastened to wall studs.

Attaching to Wall using Anchor:

For attaching mounting bracket to hollow walls (wall areas between studs) or solid walls (concrete or masonry)

Note: Wall anchors, mounting screws, and spacer are in hardware package. The hardware package is provided with heater.

1. Drill holes at marked locations using 5/16” drill bit. For solid walls (concrete or masonry), drill at least 1” deep.

2. Fold wall anchor as shown in figure 8 below.

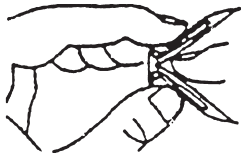

Figure 8.

3. Insert wall anchor (wings first) into hole. Tap anchor flush to wall.
4. For thin walls (1/2” or less) insert red key into wall anchor.
5. Place mounting bracket onto wall. Line up holes on each end of bracket with wall anchors.
6. Insert mounting screws through bracket and into wall anchors.
7. Tighten screws until mounting bracket is firmly fastened to wall.

Placing Heater on Mounting Bracket

1. Locate two horizontal slots on back pane of heater (see figure 9).
2. Place heater onto mounting bracket. Slide horizontal slots onto stand-out tabs on mounting bracket.

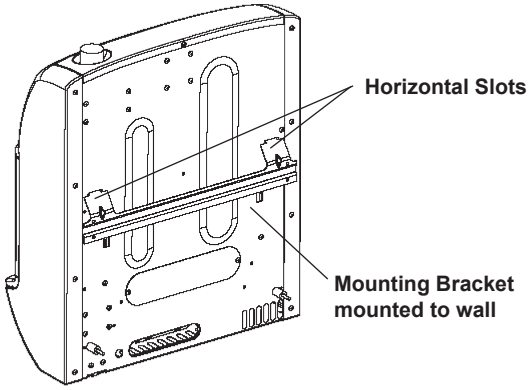

Figure 9.

Installing Bottom Mounting Screws

1. Locate two bottom mounting holes. These holes are near bottom on back panel of heater (see figure 10).

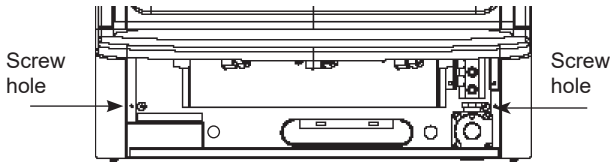

Figure 10

2. Mark screws locations on wall.
3. Remove heater from mounting bracket.
4. If installing bottom mounting screw into hollow or solid wall, install wall anchors. Follow steps 1 through 4 under Attaching to Wall using Anchor. If installing bottom mounting screw into wall stud, drill holes at marked locations using 9/64” drill bit.
5. Re-place heater onto mounting bracket.
6. Place spacers between bottom mounting holes and wall anchor or drilled hole.
7. Hold spacer in place with one hand. With the other hand, insert mounting screw through bottom mounting hole and spacer. Place tip of screw in opening of wall anchor or drilled hole.
8. Tighten both screws until heater is firmly secured to wall. Do not over tighten.

Note: Do not re-place front panel at this time. Replace front panel after making gas connections and checking for leaks.

FLOOR MOUNTING AWAY FROM WALL:

Installing Support Feet (see figure 11)

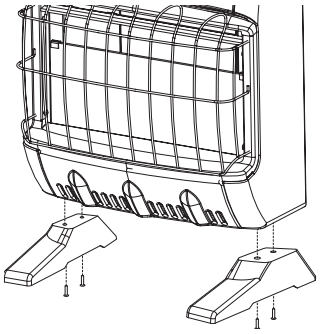

Figure 11

1. Lay heater onto table on its back with bottom edge overhanging table edge.
2. Securely attach feet to bottom of heater using 2 – self-tapping screws each.

Note: Feet should have long end going out the front of heater, and the edge coinciding with side of heater. If feet overhang side of the heater, switch leg location.

3. Place heater on non-combustible surface (see Locating Heater above) before proceeding with gas connection. If this will be a permanent location, heater may be locked into position using anchoring holes in mounting feet.

Note: Use of floor mounting feet will require you to use a 3/8 NPT street elbow to make gas connection.

CONNECTING TO GAS SUPPLY

⚠ **WARNING:** A qualified service person must connect heater to gas supply. Follow all local codes.

⚠ **WARNING:** This appliance requires a 3/8” NPT (National Pipe Thread) inlet connection to the pressure regulator. Use of floor mounting feet will require you to use a 3/8 NPT street elbow to make gas connection.

CAUTION: Never connect heater directly to the Propane supply. This heater requires an external regulator (not supplied). Install the external regulator between the heater and Propane/LP supply.

IMPORTANT: **The installer must supply an external regulator. The external regulator will reduce the incoming gas pressure to between 11 and 14 inches of water. If you do not reduce incoming gas pressure heater regulator damage could occur. Install external regulator with the vent pointing down. Pointing the vent down protects it from freezing rain or sleet.**

CAUTION: Use only new black iron or steel pipe. Internally-tinned copper tubing may be used in certain areas. Check your local codes. Use pipe of larger enough diameter to allow proper gas volume to heater. If pipe is too small, undue loss of pressure will occur.

Installation must include an equipment shutoff valve, union and plugged 1/8" NPT tap. Locate NPT tap within reach of test gauge hookup. NPT tap must be upstream from heater (see figure 12).

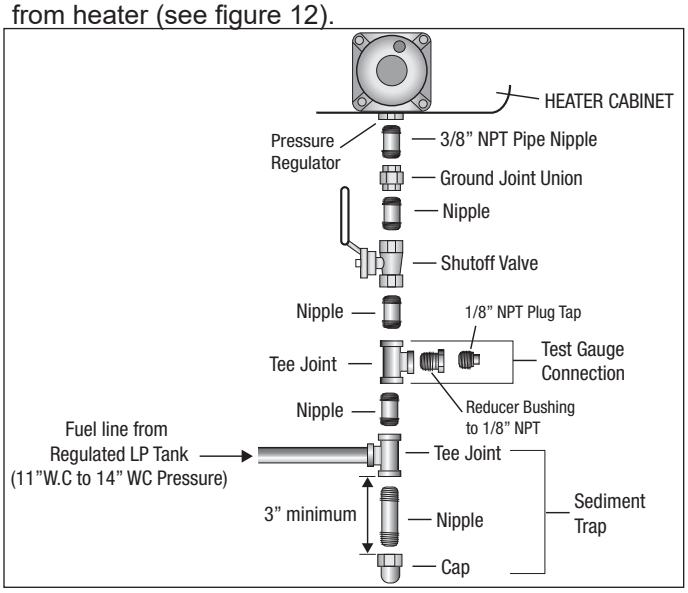

FIGURE 12

*A CSA/AGA certified equipment shutoff valve with 1/8" NPT tap is an acceptable alternative to test gauge connection. Purchase the CSA/AGA certified equipment shutoff valve from your dealer.

IMPORTANT: Install an equipment shutoff valve in an accessible location. The equipment shutoff valve is for turning on or shutting off the gas to the appliance.

Apply pipe joint sealant lightly to male threads. This will prevent excess sealant from going into pipe. Excess sealant in pipe could result in clogged heater fuel train.

CAUTION: Use pipe joint sealant that is resistant to *LP-Gas*.

Install sediment trap in supply line as shown in figure 12. Locate sediment trap where it is within reach for cleaning. A sediment trap traps moisture and contaminants. This keeps them from going into heater. If sediment trap is not installed or is installed improperly, heater may not run correctly.

IMPORTANT: Hold pressure regulator with wrench when connecting it to gas piping and/or fittings.

CHECKING GAS CONNECTIONS

⚠ **WARNING:** Test all gas piping and connections for leaks after installing or servicing. Correct all leaks at once.

⚠ **WARNING:** Never use an open flame to check for a gas leak. Apply a mixture of liquid soap and water to all joints. Bubbles forming show a leak. Correct all leaks at once.

PRESSURE TESTING GAS SUPPLY PIPING SYSTEM

Test pressure in Excess of ½ psig (3.5kPa)

1. Disconnect appliance with its appliance main gas valve (control valve) and equipment shutoff valve from gas supply piping system. Pressures in excess of ½ psig will damage heater regulator.
2. Cap off open end of gas pipe where equipment shutoff valve was connected.
3. Pressurize supply piping system by either using compressed air or opening main gas valve on or near gas meter.
4. Check all connections and joints in gas supply piping system. Apply mixture of liquid soap and water to gas joints. Bubbles forming show a leak.
5. Correct all leaks at once.
6. Depressurize and relieve pressure in supply piping system.
7. Reconnect heater and equipment shutoff valve to gas supply.
8. Reconnected fittings must be checked for leaks in next section.

Test Pressure Equal To or Less Than ½ psig (3.5 kPa)

1. Close equipment shutoff valve (see figure 13).
2. Pressurize supply piping system by either using compressed air or opening main gas valve on or near gas meter.
3. Check all joints from the gas meter to equipment shutoff valve (see figure 14). Apply mixture of liquid soap and water to gas joints. Bubbles forming show a leak.
4. Correct all leaks at once.
5. Depressurize and relieve pressure from supply piping system.

Pressure Testing Heater Gas Connections:

1. The appliance and its appliance main gas valve must be disconnected from the gas supply piping system during any pressure testing of that system at test pressures in excess of ½ psi (3.5 kPa). The appliance must be isolated from the gas supply piping system by closing its equipment shutoff valve during any pressure testing of the gas supply piping system at test pressures equal to or less than ½ psi (3.5 kPa).
2. Make sure control knob of heater is in OFF position.
3. Open equipment shutoff valve (see figure 13).
4. Open main gas valve on or near gas meter.
5. Check all joints from equipment shutoff valve to control valve (see figure 14). Apply mixture of liquid soap and water to gas joints. Bubbles forming show a leak.
6. Correct all leaks at once.
7. Light heater (see *Operating Your Heater*, pages 10 and 11. Check the rest of the internal joints for leaks.
8. Turn off heater (see *To Turn OFF Gas to Appliance*, page 11.
9. Replace lower front panel.

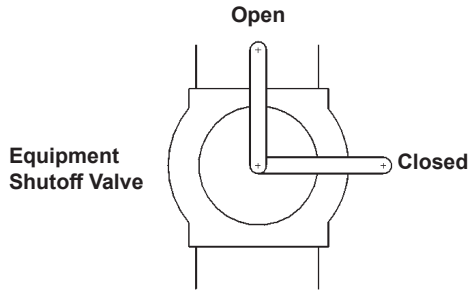

Figure 13

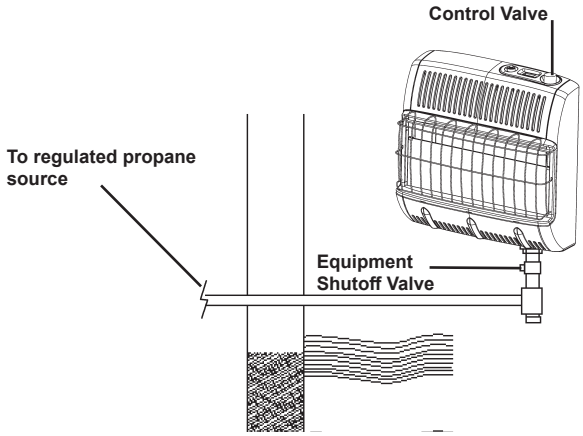

Figure 14

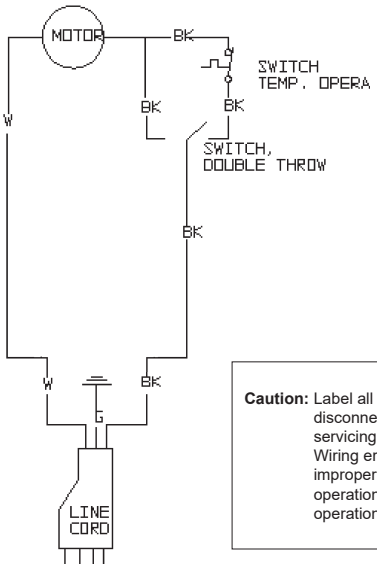

Figure 15

ELECTRICAL WIRING DIAGRAM:

If any original wiring as supplied with the heater must be replaced, it must be replaced with type AWG 105°C wire or its equivalent except as indicated.

⚠ **WARNING:** Electrical Grounding Instructions: This heater is equipped with a three-prong (grounding) plug for your protection against shock hazard and should be plugged into a properly grounded three-prong receptacle.

OPERATING YOUR HEATER

FOR YOUR SAFETY READ BEFORE LIGHTING

⚠ **WARNING:** If you do not follow these instructions exactly, a fire or explosion may result causing property damage, personal injury or loss of life.

A. This appliance has a pilot which must be lighted by pushing the ignitor button. When lighting the pilot, follow these instructions exactly.

B. BEFORE LIGHTING smell all around the appliance area for gas. Be sure to smell next to the floor because some gas is heavier than air and will settle on the floor.

WHAT TO DO IF YOU SMELL GAS

- Do not try to light any appliance.
- Do not touch any electrical switch; do not use any phone in your building.
- Immediately call your gas supplier from a neighbor's phone. Follow the gas supplier's instructions.
- If you can not reach your gas supplier, call the fire department.

C. Use only your hand to push in or turn the gas control knob. Never use tools. If knob will not push in or turn by hand, don't try to repair it call a qualified service technician or gas supplier. Force or attempted repair may result in a fire or explosion.

D. Do not use this appliance if any part has been underwater. Immediately call a qualified service technician to inspect the appliance and to replace any part of the control system which has been underwater.

LIGHTING INSTRUCTIONS

1. STOP! Read the all safety information included with and on the side of heater.
2. Turn off all electric power to the appliance and make sure the equipment shutoff valve is fully open.
3. Push in gas control knob and slightly turn clockwise to the OFF position (see figure 16).
4. Wait five (5) minutes to clear out any gas. Then smell for gas including near the floor. If you smell gas, STOP! Follow “B” in the safety information above. If you do not smell gas, go to the next step.
5. Push in and turn control knob counterclockwise to PILOT. Press in control knob for five (5) seconds.

Note: The first time that the heater is operated after connecting the gas supply, the control knob should be depressed for about 30 seconds. This will allow air to bleed from the gas system. This may take longer in some installations

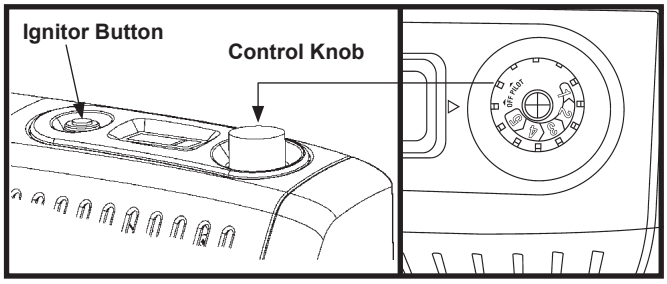

Figure 16.

6. With control knob pressed in, push down and release the ignition button. This will light pilot. If needed keep pressing igniter button until pilot lights.
7. Keep control knob pressed in for (30) seconds after lighting pilot. After 30 seconds, release control knob.

- If pilot does not stay lit, refer to Troubleshooting, pages 14 & 15. Also, contact a qualified service person of gas supplier for repairs.
- If control knob does not pop up when released, contact a qualified service person or gas supplier for repairs.

8. When the pilot is lit, turn control knob counterclockwise to heating level. The main burner should light.
9. To select the desired heat level, turn the temperature setting knob counterclockwise to between 1 & 5.

THERMOSTAT CONTROL OPERATION

FOR IR20LPT / IR30LPT: The thermostatic control used simply turns on and off the burner.

FOR BF20LPT / BF30LPT: The thermostatic control used modulates the flame size as the temperature gets closer to set point, then it turns off the burner upon reaching temperature.

The burner will cycle back on when room temperature drops below the set temperature. The control knob can be set to any heat level between 1 and 5. Selecting the HI setting will cause the burner to remain on.

TO TURN OFF GAS TO APPLIANCE

SHUTTING OFF HEATER

1. Turn control knob clockwise to the OFF position.
2. Turn off all electrical power to the appliance if servicing is to be preformed.
3. Turn off equipment shutoff valve.

SHUTTING OFF BURNER ONLY (PILOT STAYS LIT)

1. Turn control knob clockwise to the PILOT/IGN position.

INSPECTING BURNER

Check pilot flame pattern and burner flame pattern often.

PILOT FLAME PATTERN

Figure 17 shows a correct pilot flame pattern and incorrect pilot flame pattern. The incorrect pilot flame pattern is not touching thermocouple. This will cause the thermocouple to cool. When the thermocouple cools, the heater will shut down. If pilot flame pattern is incorrect, as shown in Figure 17:

- Turn heater off (see *To Turn OFF Gas to Appliance*, above.
- See Troubleshooting, pages 14-15.

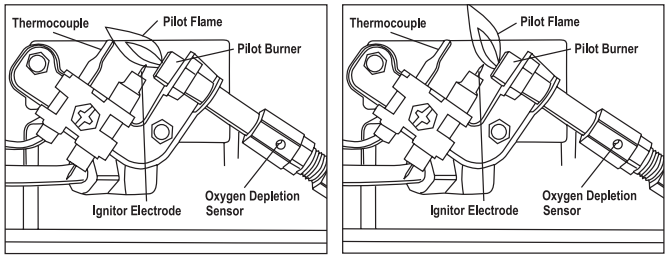

Correct pilot position. Incorrect pilot position.

Figure 17

CLEANING AND MAINTENANCE

⚠ **WARNING:** Turn off heater and let cool before servicing.

CAUTION: You must keep control areas, burner and circulation air passageways of heater clean. Inspect these areas of heater before use. Have the heater inspected yearly by a qualified service person. Heater may need more frequent cleaning due to excess lent from carpeting, bedding material, pet hair, etc.

Make sure grille guard is in place before running heater. If screen or grille guard is removed for servicing it must be replaced prior to operating the heater.

⚠ **WARNING:** Failure to keep the primary air opening(s) of the burner(s) clean may result in sooting and property damage.

CLEANING ODS/PILOT AND BURNER

- Use as vacuum cleaner, pressurized air or small soft bristled brush to clean.

CLEANING BURNER PILOT AIR HOLE INLET

We recommend that you clean the unit ever 2,500 hours of operation or every three months. We also recommend that you keep the burner tube and pilot assembly clean and free of dust and dirt. To clean these parts we recommend using compressed air no greater than 30 psig.

This can be done by using a vacuum cleaner in the blow position, using compressed air in a can, please follow the directions on the can. If you don't follow directions on the can you could damage the burner or pilot assembly. In addition, the directions that follow should also be followed.

1. Shut off the unit, including the pilot. Allow the unit to cool for at least thirty minutes.
2. Inspect burner and pilot for dust and dirt.
3. Blow air through the port/slots and holes in the burner.

A yellow tip on the pilot flame indicates dust and dirt in the pilot assembly. To clean the pilot assembly find the small pilot air inlet hole about two inches from where the pilot flame comes out of the pilot assembly (see figure 18). With the unit off, lightly blow air through the air inlet hole. You may blow through a drinking straw if compressed air is not available.

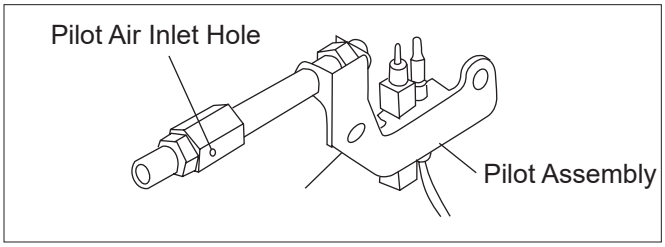

Figure 18

CLEANING HEATER CABINET

Air passageways

- Use a vacuum cleaner or pressurized air to clean

Exterior

- Use a soft cloth dampened with a mild soap and water mixture. Wipe the cabinet to remove dust.

TROUBLESHOOTING

NOTE: All troubleshooting items are listed in order of operation and likely occurrence.

⚠ **WARNING:** Only a qualified service person should service and repair heater.

CAUTION: Never use a wire needle, or similar object to clean ODS/pilot. This can damage ODS/pilot unit. Make sure grille guard is in place before running heater. If screen or grille guard is removed for servicing it must be replaced prior to operating the heater.

⚠ **WARNING:** If you smell gas:

- Shut off gas supply
- Do not try to light any appliance
- Do not touch any electrical switch; do not use any phone in your building
- Immediately call you gas supplier from a neighbor's phone. Follow the gas supplier's instructions.
- If you cannot reach your gas supplier, call the fire department.

IMPORTANT: Operating heater where impurities in air exist may create odors. Cleaning supplies, paint, paint remover, cigarette smoke, cements and glues, new carpet or textiles, etc., create fumes. These fumes may mix with combustion air and create odors and possible discoloration of walls and ceilings.

OBSERVED SYMPTOM	POSSIBLE CAUSE	REMEDY
When ignitor button is pressed in, there is no spark at pilot	1. Ignitor electrode positioned wrong. 2. Ignitor electrode is broken. 3. Ignitor electrode not connected to ignitor. 4. Ignitor cable pinched or wet. 5. Broken ignitor cable. 6. Bad ignitor. 7. Low Battery.	1. Reposition electrode 2. Replace electrode 3. Reconnect ignitor cable 4. Free ignitor cable if pinched by any metal or tubing. Keep ignitor cable dry. 5. Replace ignitor cable 6. Replace igniter assembly 7. Replace battery
ODS/pilot lights but flame goes out when control knob is released	1. Gas supply turned off or equipment shutoff valve closed. 2. Control knob not fully pressed in while pressing ignition button. 3. Air in gas line when installed. 4. ODS/pilot is clogged. 5. Gas regulator setting is not correct 6. Control knob not in pilot position 7. Thermocouple connection loose at control valve 8. Pilot flame not touching thermocouple, which allows thermocouple to cool, causing pilot flame to go out. This problem could be caused by one or both of the following: a. Low gas pressure b. Dirty or partially clogged ODS/pilot	1. Turn on gas supply turn off or open equipment shutoff valve closed 2. Fully press in control knob while pressing ignition button 3. Continue holding down control knob. Repeat ignition operation until air is removed. 4. Clean ODS/pilot (see Cleaning and Maintenance pages 11 and12). 5. Replace gas regulator 6. Turn Control knob to pilot position
When ignitor button is pressed in, there is a spark at the ODS/pilot but no ignition	1. Control knob not fully pressed in. 2. Control knob not pressed in long enough 3. Equipment shutoff valve not fully open 4. Thermocouple damaged 5. Control valve damaged	1. Press in control knob fully 2. After ODS/pilot lights, keep control knob pressed in for 30 seconds 3. Fully open equipment shutoff valve 4. Hand tighten thermocouple nut until snug, and then tighten 1/4 turn more. 5. - a. Contact local gas company b. Clean ODS/pilot (see Cleaning and Maintenance, pages 11 and 12). 6. Replace thermocouple 7. Replace Control valve.

Burner does not light after ODS/pilot is lit	1. Burner orifice is clogged 2. Burner orifice diameter to small 3. Inlet gas pressure is too low	1. Clean burner orifice (see Cleaning and Maintenance on page 11), or replace burner orifice 2. Replace burner orifice 3. Contact local gas company
Delayed ignition of burner	1. Manifold pressure is too low 2. Burner orifice is clogged	1. Contact local gas company 2. Clean burner orifice (see Cleaning and Maintenance on page 11), or replace burner orifice
Burner backfiring during operation	1. Burner orifice is clogged or damaged 2. Burner damaged 3. Gas regulator defective	1. Clean burner orifice (see Cleaning and Maintenance on pages 11 and 12), or replace burner orifice 2. Replace burner 3. Replace gas regulator
Burner plaque(s) does not glow [Infrared Only]	1. Plaque damaged 2. Control knob set between locked positions. 3. Inlet gas pressure is too low	1. Replace burner 2. Turn control knob until it locks at desired setting. 3. Replace gas regulator
Slight smoke or odor during initial operation	1. Residues from manufacturing process	1. Problem will stop after a few hours of operation
Heater produces a whistling noise when burner is lit	1. Turning control knob to HI position when burner is cold 2. Air in gas line 3. Air passageways on heater blocked 4. Dirty or partially clogged burner orifice.	1. Turn control knob to LO position and let warm up for a minute. 2. Operate burner until air is removed from line have gas line checked by local gas company. 3. Observe minimum installation clearances (see Figure 4 page 7) 4. Clean burner orifice (see Cleaning and Maintenance on pages 11 and 12), or replace burner orifice.
White powder residue forming within burner box or on adjacent walls or furniture	1. When heated, vapors from furniture polish, wax, carpet cleaners, etc., turn into white powder residue	1. Turn heater off when using furniture polish, wax, carpet cleaner or similar products.
Heater produces unwanted odors.	1. Heater burning vapors from paint, hair spray, glues, etc. See IMPORTANT statement on page 14. 2. Gas leak. See WARNING statement at top of page 14.	1. Ventilate room. Stop using odor-causing products while heater is running. 2. Locate and correct all leaks (see Checking Gas Connections, page 10)
Heater shuts off in use (ODS operates)	1. Not enough fresh air is available 2. Low line pressure 3. ODS/pilot is partially clogged	1. Open window and/or door for ventilation 2. Contact local gas company 3. Clean ODS/pilot (see Cleaning and Maintenance, pages 11 and 12)
Gas odor even when control knob is in OFF position	1. Gas leak. See WARNING statement at top of page 14. 2. Control valve is defective	1. Locate and correct all leaks (see Checking Gas Connections, page 10) 2. Replace control valve
Gas odor during combustion	1. Foreign matter between control valve and burner 2. Gas leak. See WARNING statement at top of page 14.	1. Take apart gas tubing and remove foreign matter 2. Locate and correct all leaks (see Checking Gas Connections, page 10)
Heater produces a clicking/ticking noise just after burner is lit or shut off	1. Metal expanding while heating or contracting while cooling	1. This is common with most heaters. If noise is excessive, contact qualified service person
Moisture/condensation noticed on windows	1. Not enough combustion/ventilation air	1. Refer to Fresh Air for Combustion and Ventilation page 3 through 5.

PARTS LIST AND DIAGRAM

MODEL: MHVFBF20LPBT / MHVFBF20LPT							
ITEM	**P/N**	**PART DESCRIPTION**	**QTY**	**ITEM**	**P/N**	**PART DESCRIPTION**	**QTY**
1	80094	Wire Guard	1	16	80081	Thermostat Valve	1
2	80096	Front Panel	1	17	N/A	Thermostat Mounting Bracket	1
3	80086	Reflector	1	18	N/A	Back Heat Shield	1
4	80088	Front Heat Shield	1	19	80059	Floor Mount Feet	1
5	80093	Glass	1	20	80097	Back Panel	1
6	80091	Glass Bracket	1	21	N/A	Wall Mounting Bracket	1
7	80085	Burner Assembly	1	22	N/A	Reflector Back Panel	1
8	80056	ODS Pilot Assembly w/ Thermocouple	1	23	80110	Fan Assembly	1
9	80009	Orifice	1	24	80049	Fan Switch	1
10	80073	Orifice Adapter	1	25	80011	Ignitor Module Mounting Bracket	1
11	N/A	Regulator Mounting Bracket	1	26	80019	Ignitor Module	1
12	N/A	Regulator Connection	1	27	80014	Ignitor Wire	1
13	80106	Regulator	1	28	N/A	Burner Left Bracket	1
14	70597	3/8" FTP x 3/8" MPT Elbow	1	29	80013	High Limit Switch (FAN)	1
15	N/A	Burner Right Bracket	1	**	70342	Hardware Kit (not shown)	1

⚠ **WARNING:** Failure to position the parts in accordance with these diagrams or failure to use only parts specifically approved with this heater may result in property damage or personal injury.

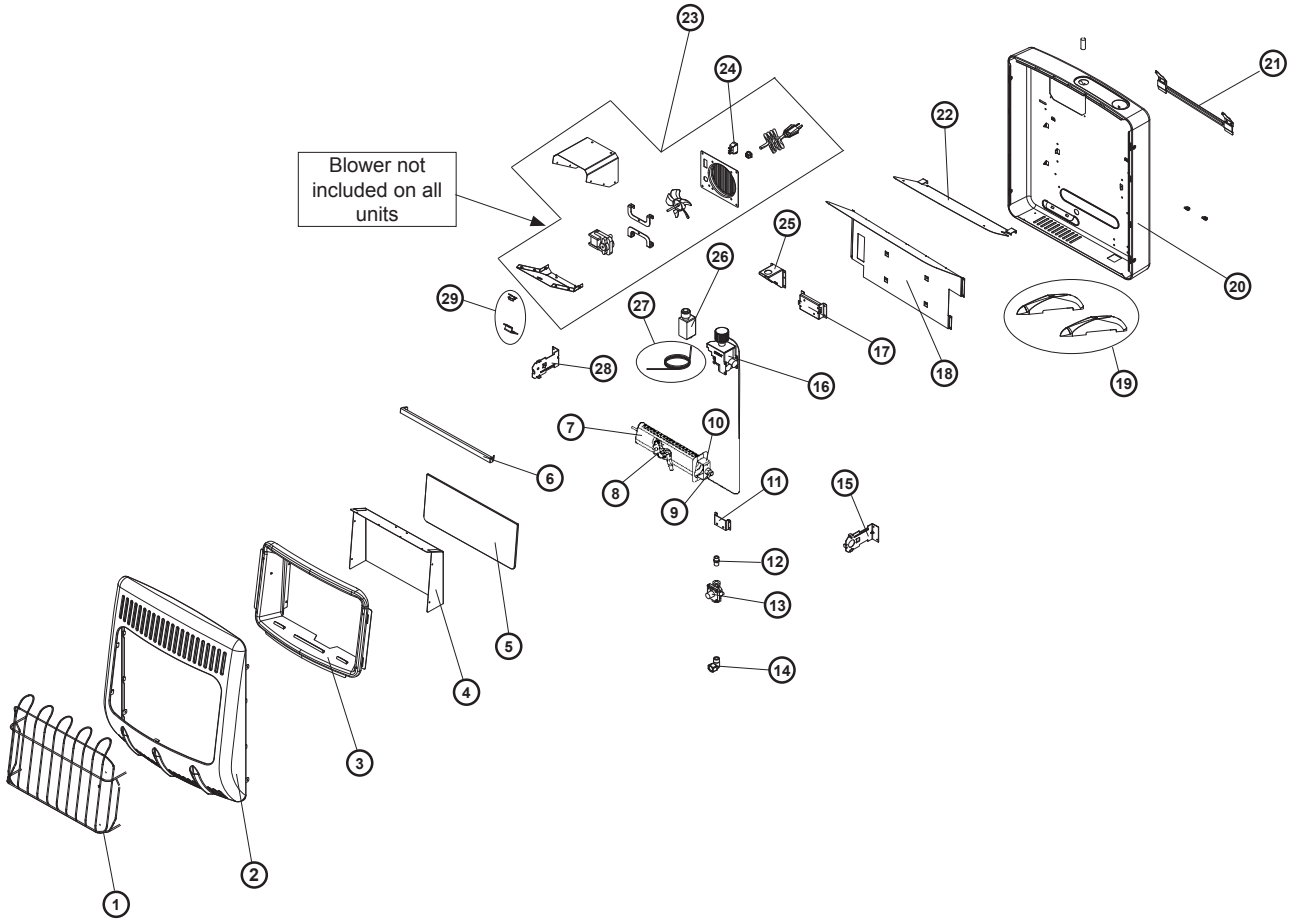

PARTS LIST AND DIAGRAM

MODEL: MHVFBF30LPBT / MHVFBF30LPT							
ITEM	**P/N**	**PART DESCRIPTION**	**QTY**	**ITEM**	**P/N**	**PART DESCRIPTION**	**QTY**
1	80041	Wire Guard	1	16	80081	Thermostat Valve	1
2	80065	Front Panel	1	17	N/A	Thermostat Mounting Bracket	1
3	80025	Reflector	1	18	N/A	Back Heat Shield	1
4	80029	Heat Shield	1	19	80058	Floor Mount Feet	1
5	80039	Glass	1	20	80066	Back Panel	1
6	80035	Glass Bracket	1	21	80037	Wall Mounting Bracket	1
7	80018	Burner Assembly	1	22	N/A	Reflector Back Panel	1
8	80059	ODS Pilot Assembly w/ Thermocouple	1	23	80110	Fan Assembly	1
9	80009	Orifice	1	24	80049	Fan Switch	1
10	80073	Orifice Adapter	1	25	80011	Ignitor Module Mounting Bracket	1
11	N/A	Regulator Mounting Bracket	1	26	80019	Ignitor Pulse	1
12	N/A	Regulator Connection	1	27	80014	Ignitor Wire	1
13	80082	Regulator	1	28	N/A	Burner Left Bracket	1
14	70597	3/8" FTP x 3/8" MPT Elbow	1	29	80013	High Limit Switch (FAN)	1
15	N/A	Burner Right Bracket	1	**	70342	Hardware Kit (not shown)	1

⚠ **WARNING:** Failure to position the parts in accordance with these diagrams or failure to use only parts specifically approved with this heater may result in property damage or personal injury.

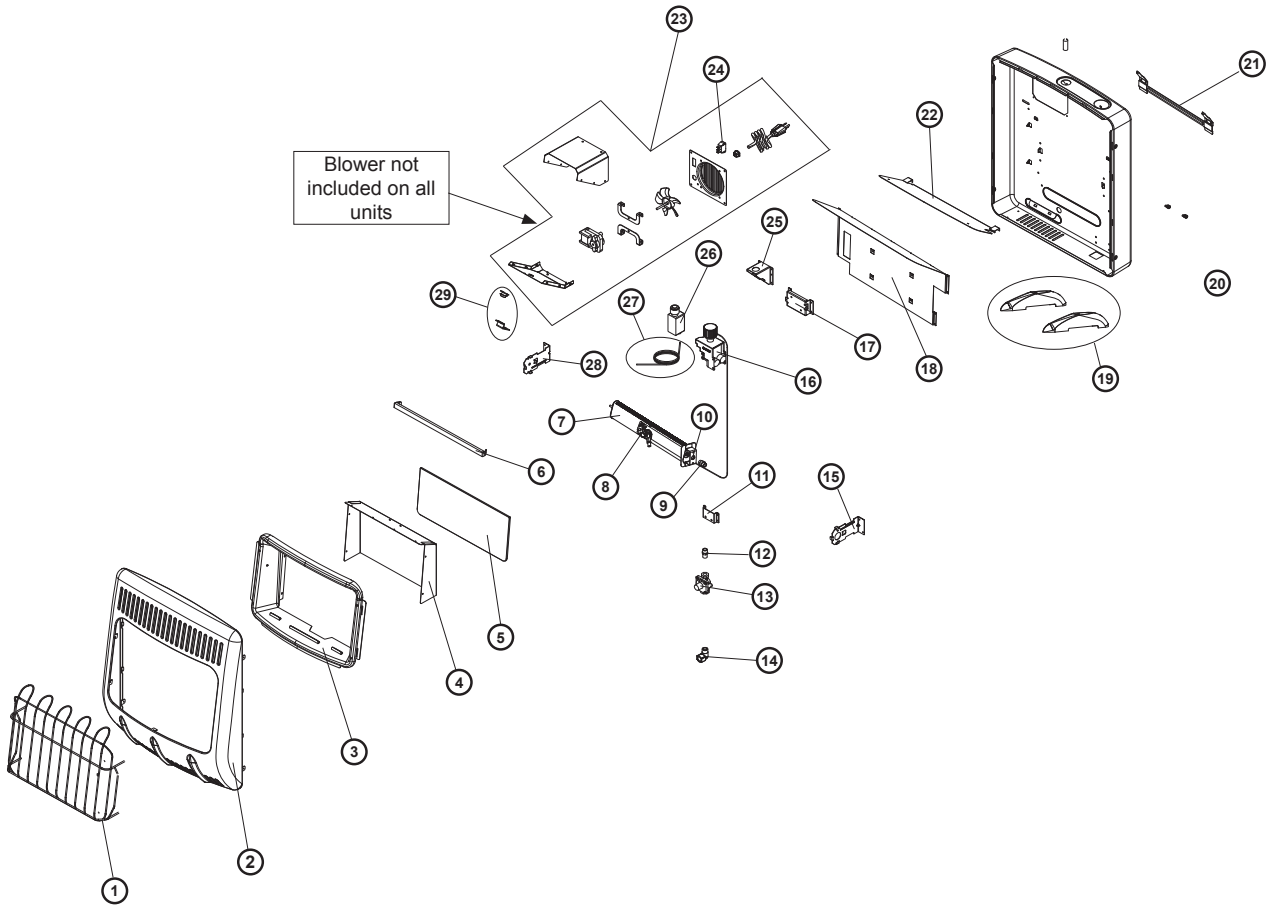

PARTS LIST AND DIAGRAM

MODEL: MHVFRD20LPBT / MHVFRD20LPT							
ITEM	**P/N**	**PART DESCRIPTION**	**QTY**	**ITEM**	**P/N**	**PART DESCRIPTION**	**QTY**
1	80094	Wire Guard	1	14	N/A	Thermostat Mounting Bracket	1
2	80096	Front Panel	1	15	N/A	Back Heat Shield	1
3	80086	Reflector	1	16	80058	Floor Mounting Feet	1
4	80057	ODS Assembly w/ Thermocouple (NG)	1	17	80097	Back Panel	1
5	N/A	ODS Bottom Bracket	1	18	80037	Wall Mounting Bracket	1
6	80108	Burner Assembly	1	19	N/A	Heat Shield Reflector	1
7	70597	3/8" FTP x 3/8" MPT Elbow	1	20	80110	Fan Assembly	1
8	80107	Regulator	1	21	80011	Ignitor Module Mounting Bracket	1
9	N/A	Regulator Connection	1	22	80019	Ignitor Pulse	1
10	N/A	Regulator Mounting Bracket	1	23	80014	Ignitor Wire	1
11	80009	Orifice	1	24	80013	High Limit Switch (Fan)	1
12	N/A	Bracket Plenum Assembly	1	25	80049	Fan Switch	1
13	80081	Thermostat Valve	1	**	70342	Hardware Kit (not shown)	1

⚠ **WARNING:** Failure to position the parts in accordance with these diagrams or failure to use only parts specifically approved with this heater may result in property damage or personal injury.

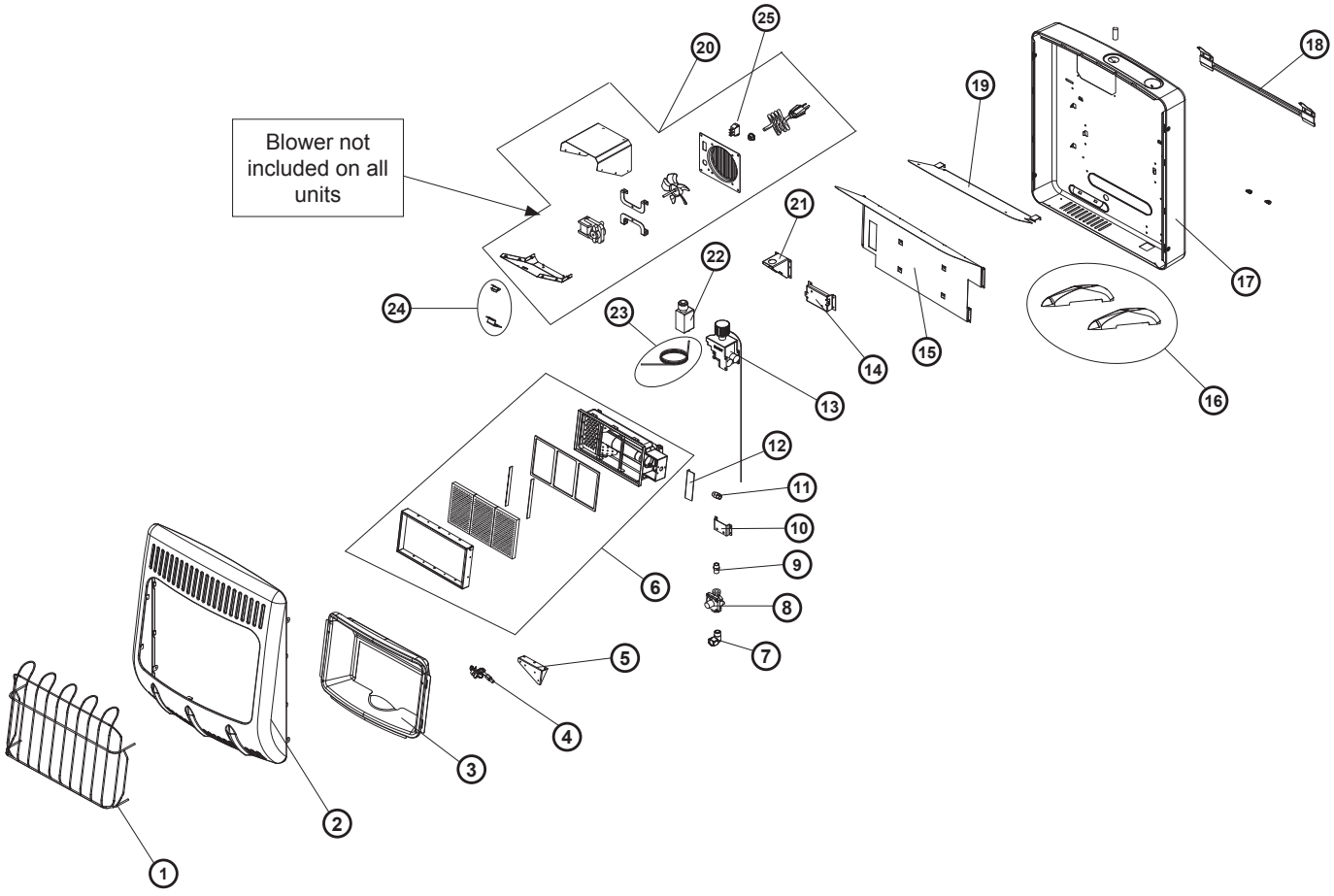

PARTS LIST AND DIAGRAM

MODEL: MHVFRD30LPBT / MHVFRD30LPT							
ITEM	**P/N**	**PART DESCRIPTION**	**QTY**	**ITEM**	**P/N**	**PART DESCRIPTION**	**QTY**
1	80041	Wire Guard	1	14	N/A	Thermostat Mounting Bracket	1
2	80065	Front Panel	1	15	N/A	Back Heat Shield	1
3	80023	Reflector	1	16	80058	Floor Mounting Feet	1
4	80057	ODS Assembly w/ Thermocouple (NG)	1	17	80066	Back Panel	1
5	N/A	ODS Bottom Bracket	1	18	80037	Wall Mounting Bracket	1
6	80109	Burner Assembly	1	19	N/A	Heat Shield Reflector	1
7	70597	3/8" FTP x 3/8" MPT Elbow	1	20	80110	Fan Assembly	1
8	80083	Regulator	1	21	80011	Ignitor Module Mounting Bracket	1
9	N/A	Regulator Connection	1	22	80019	Ignitor Pulse	1
10	N/A	Regulator Mounting Bracket	1	23	80014	Ignitor Wire	1
11	80009	Orifice	1	24	80013	High Limit Switch (Fan)	1
12	N/A	Bracket Plenum Assembly	1	25	80049	Fan Switch	1
13	80081	Thermostat Valve	1	**	70342	Hardware Kit (not shown)	1

⚠ **WARNING:** Failure to position the parts in accordance with these diagrams or failure to use only parts specifically approved with this heater may result in property damage or personal injury.

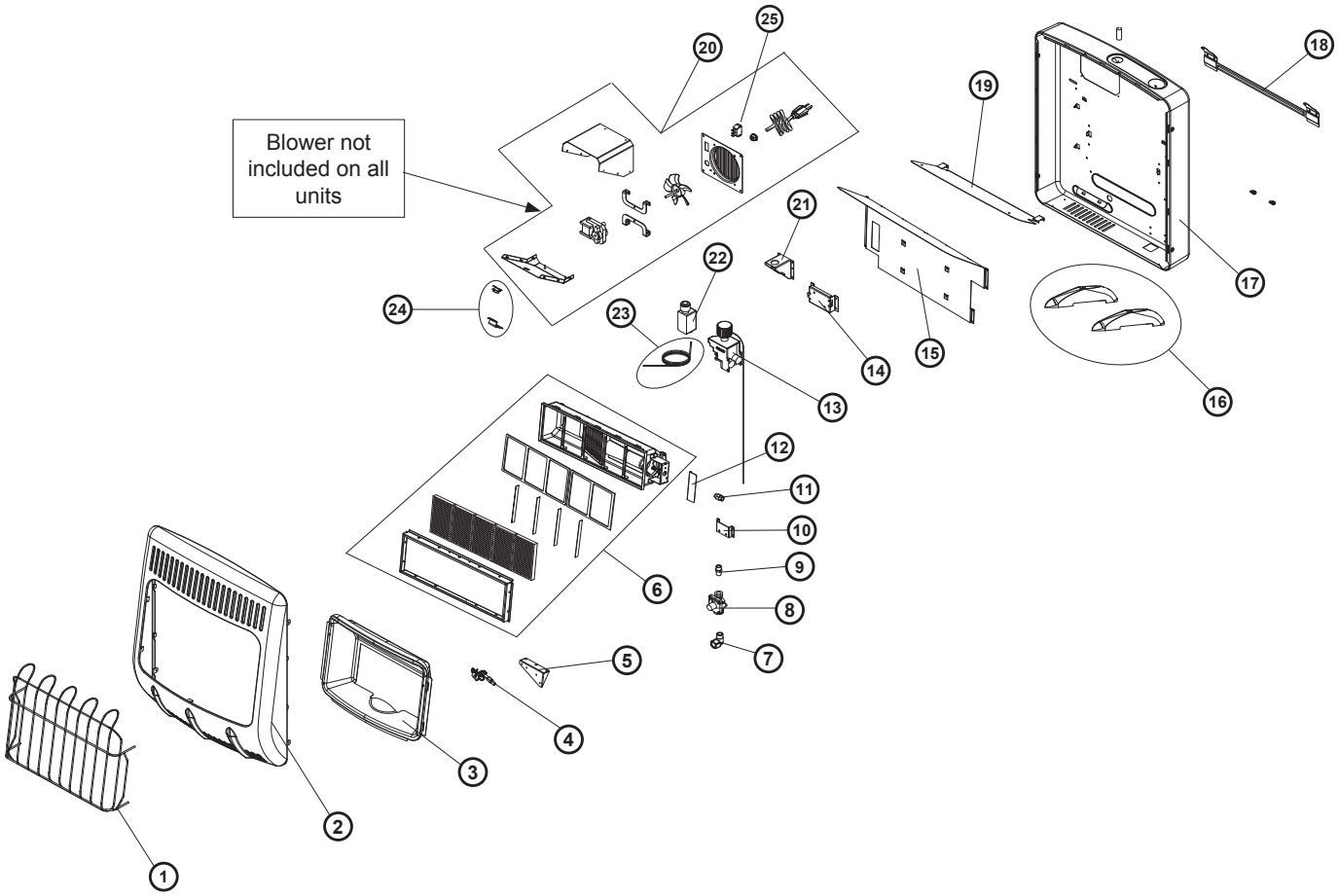

OPERATING INSTRUCTIONS AND OWNER'S MANUAL

READ INSTRUCTIONS CAREFULLY: Read and follow all instructions. Place instructions in a safe place for future reference. Do not allow anyone who has not read these instructions to assemble, light, adjust or operate the heater.

WARNING:

USE ONLY MANUFACTURER'S REPLACEMENT PARTS. USE OF ANY OTHER PARTS COULD CAUSE INJURY OR DEATH. REPLACEMENT PARTS ARE ONLY AVAILABLE DIRECT FROM THE FACTORY AND MUST BE INSTALLED BY A QUALIFIED SERVICE AGENCY.

REPLACEMENT PARTS ORDERING INFORMATION:

PURCHASING: Accessories may be purchased at any Mr. Heater local dealer or direct from the factory

FOR INFORMATION REGARDING SERVICE

Please call Toll-Free 800-251-0001
www.mrheater.com

Our office hours are 8:00 AM – 5:00 PM, EST, Monday through Friday.

Please include the model number, date of purchase, and description of problem in all communication.

LIMITED WARRANTY

Mr. Heater, Inc. warrants its heaters and accessories to be free from defects in material and workmanship for a period of 1 year from date of purchase. Mr. Heater, Inc. will repair or replace this product free of charge if it has been proven to be defective within the 1-year period, and is returned at customer expense with proof of purchase to Mr. Heater, Inc. within the warranty period.

Mr. Heater, Inc. reserves the right to make changes at any time, without notice or obligation, in colors, specifications, accessories, materials and models.

Mr. Heater, Inc., 4560 W. 160TH ST., CLEVELAND, OHIO 44135 • 800-251-0001
Mr. Heater is a registered trademarks of Mr. Heater, Inc.
© 2017, Mr. Heater. All rights reserved

DESIGN CERTIFIED ®

ANSI Z21.11.2 - 2013

MASTER METER MMT TURBINES

2" TO 8"

MAKE A SOUND INVESTMENT.
HIGH RATE OF FLOW, HIGH REVENUE RETURN.

Master Meter MMT Turbine Meters provide sustained accuracy where you need it most — your high-volume water transactions. Built armored car tough with a rugged bronze case, these meters deliver long-service life while churning at high RPM with the fine tuned, precision performance of a sports car. Engineering advancements yield streamlined flow patterns resulting in minimal head loss, reduced water delivery costs, and maximum possible flow to end-user.

MIND OF A BANKER.
BODY OF A BOUNCER.

Choose the optional DIALOG 3G® Integrated AMR Register and put our Connection*Free*™ AMR Technology to work for you and your biggest customers. 3G delivers powerful results with 4,000 read data logging capable of providing detailed usage profiles that, when shared with your customers, can help them make informed decisions on water use that can positively impact conservation initiatives, and reduce customer billing complaints. In turn, 3G looks out for your utility's bottom line with vigilant Revenue Impact Alerts™ monitoring for leaks, theft (*backflow*), tamper, and zero consumption. Our award-winning register design houses all vital components — encoder, RF transmitter, battery and antenna — safely within the register's sealed stainless steel and tempered glass enclosure. We eliminated external wires, components and connections — the #1 cause of maintenance related issues on competitive designs.

The MMT Turbine Meter is designed with the future in mind for use in mobile and fixed network AMR/AMI data management systems.

Industrial I Agriculture I Utility I Custody Transfer

FEATURES & BENEFITS:

- Meets All Applicable AWWA Standards and the Safe Drinking Water Act; NSF-61 & NSF-372 Certified Main Case
- Sustained Accuracy for Maximum Revenue Over Time
- Precision Engineered for Efficient Flow Patterns with Minimal Head Loss
- Turbine and Chamber Constructed from Non-Hydrolyzing, Wear Resistant Polymer
- Wide Range of Flow for Maximum Accountability of Usage
- AMR/AMI Compatible
- With Optional 3G Integrated Register:
  - Provide Accurate Usage Detail for High Dollar, High-Volume Connections with Rich 4,000 Read Data Logging Capabilities (scalable / customer defined resolution)
  - Protect Your Utility's Bottom Line:
    - Revenue Impact Alerts - Leak, Tamper, Theft (*Backflow*), and Zero Consumption (*Indicates Potentially Damaged Meter*)
    - Deploy District Metering Areas or Zones (DMA/DMZ) for Advanced Infrastructure Leak Management Programs

REGISTER OPTIONS:

- Accu*Linx*™ 8-wheel Absolute Encoder
- DIALOG 3G LCD Interpreter™
- Electrical Output Register
- Direct Read

READ:

- Direct Read/Manual
- Mobile Drive-By AMR - 3G
- Fixed*Linx*™ Meter Data Management solution - Utilizes the 3G technology backbone with simultaneous Mobile AMR and Fixed Network AMI data collection capabilities.

SIZES AVAILABLE: 2" - 8"

Sustained Accuracy I Low Head Loss I AMR I AMI Migratable with 3G

TECHNICAL SPECIFICATIONS:

AWWA Standard - Meets or exceeds all sections of Standard ANSI/AWWA C701 Class II, most recent revision for cold water turbine meters with AWWA Lead-Free bronze main cases.

Safe Drinking Water Act - SDWA Compliant, NSF-61, NSF-372 Certified Lead-Free Bronze main case.

Design/Operation - Velocity-type flow measurement. Water that is conditioned by an integral flow conditioning section flows past a rotor in the measuring chamber creating an impeller velocity directly proportional to water flow rate. The meter's register integrates that velocity into totalized flow. An inherent advantage for this design is exceptionally low head loss for improved infrastructure efficiencies and unparalleled wear mitigation. The register assembly is removable under line pressure permitting seamless, simplified upgrades in reading technology.

Main Case - 2" - 8" constructed of SDWA Compliant, NSF-61, NSF-372 Certified Lead-Free Bronze. Bronze register retainers and lid are standard. A downstream test plug is provided to allow field testing without removal of the assembly from the line.

Measuring Chamber - The measuring chamber assembly and turbine are built with an advanced synthetic polymer for long service life. This tough, non-hydrolyzing material ensures durable wear. The chamber design optimizes water flow, eliminating harsh turbulence for smooth, easy, operation that minimizes bearing wear. Measurement surfaces are not wear surfaces, providing sustained accuracy despite the presence of entrained solids in the water. A long-life, carbide thrust bearing serves as a wear surface.

Magnetic Drive - A reliable, direct magnetic drive provides linkage between measurement element and register. No intermediate gearing is required; no gearing is exposed to water.

Register - Standard Direct Read and DIALOG 3G AMR System registers are available. Six wheel odometers are standard. Together, an integrated and migratable technology environment is attained; direct, 3G Mobile AMR, and Fixed Network AMI.

Register Sealing - All Direct read and DIALOG® registers are IP-68 rated, permanently sealed with a scratch resistant glass lens, stainless steel base and wrap-around gasket to prevent intrusion of dirt or moisture.

Register Units - Registration available in either U.S. gallons, cubic feet or cubic meters.

Test Circle - Large center sweep hand with one hundred (100) clearly marked gradations on the periphery of the dial face.

Low Flow/Leak Indicator - Center mounted indicator with high sensitivity resulting from direct one-to-one linkage to the measuring element.

TURBINE METERS (2" TO 8")

METER OPERATING CHARACTERISTIC/DIMENSION	2"	3"	4"	6"	8"
Normal Operating Range [±1-1/2%] (gpm)	4-350	5-530	9-1350	25-2700	35-3500
Continuous Operating Range (gpm)	4-200	5-400	9-1000	25-2300	35-2700
Low Flow [95%] (gpm)	3	4	8	20	27
Maximum Intermittent Flow (gpm)	350	530	1350	2700	3500
Maximum Working Pressure (psi)	175	175	175	175	175
Maximum Working temperature (°F)	150	150	150	150	150
Length	10"	12"	14"	18"	20"
Height	6.8"	9.4"	10.0"	12.4"	13.0"
Height, bottom to center line	2.2"	3.7"	4.4"	5.5"	6.0"
Width	5.9"	7.5"	8.9"	11.1"	13.6"
Weight (lbs)	24	37	42	108	140
Packed to Carton	1	1	1	1	1
Carton Weight (lbs)	26	39	44	N/A	N/A
Register Capacity [millions] (U.S. Gallons)	100	100	1000	1000	10000
Register Capacity [millions] (Cubic Feet)	10	10	100	100	1000
Maincase Material	*SDWA / NSF-61 / NSF-372 Compliant Lead-Free Bronze Maincase*				
Flanges/End Connection	Eliptical	Round	Round	Round	Round

HEAD LOSS CHART

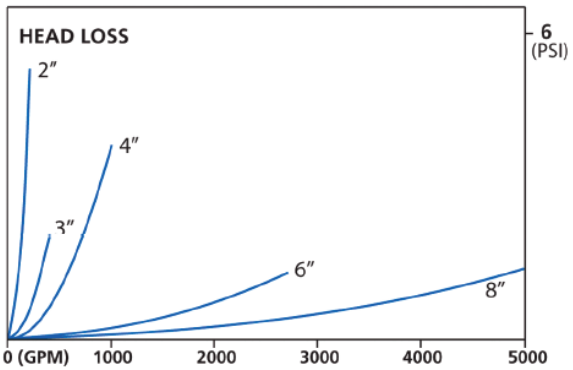

Master Meter, Inc.
101 Regency Parkway, Mansfield, TX 76063
Toll Free: 800-765-6518 • Main Line: 817-842-8000 • FAX: 817-842-8100
www.mastermeter.com

©2014 Master Meter, Inc. All rights reserved. DIALOG and Master Meter are registered trademarks of Master Meter, Inc. Master Meter reserves the right to make modifications to the products described herein at any time and without notice. U.S. Patent Nos. 7,343,795; 7,135,986; 6,819,292; 6,954,178; and others pending.

MMT061814

Turbine Meter
Installation Instructions

Recommended Installation

Proper installation is essential to maximize the accuracy and life of Turbine Meters. Turbine Meters are sensitive to unbalanced water flow patterns caused by upstream piping arrangements, including pumps, valves, tees and elbows. Care should be taken to install the meter as far from these turbulence producing devices as possible.

Master Meter endorses the recommendations for Turbine Meter installations published by AWWA in Manual M-6:

❶ When no AWWA C-701 strainer is installed, seven to ten pipe diameters of straight pipe are recommended immediately upstream of the meter.

❷ When an AWWA C-701 strainer is installed, a minimum five pipe diameters of straight pipe are recommended upstream of the meter.

❸ Downstream of the meter a minimum of three pipe diameters of straight pipe is recommended between the meter and a Service Saddle or Testing Tee.

❹ There should be straight unobstructed pipe, a minimum of five pipe diameters, downstream of the outlet flange and turbulent producing fittings.

❺ Valves immediately upstream of the meter should only be full-open gate valves.

NOTE: Turbine meters may be installed vertically or horizontally. When installed vertically, water flow must be moving upward through the meter. If installed horizontally meters must be installed in a level, horizontal position with both register and dial face facing upward as illustrated below. Turbine meters must operate in a completely full line of water at all times. The downstream pipe should be arranged to provide sufficient back pressure to maintain a full line of water.

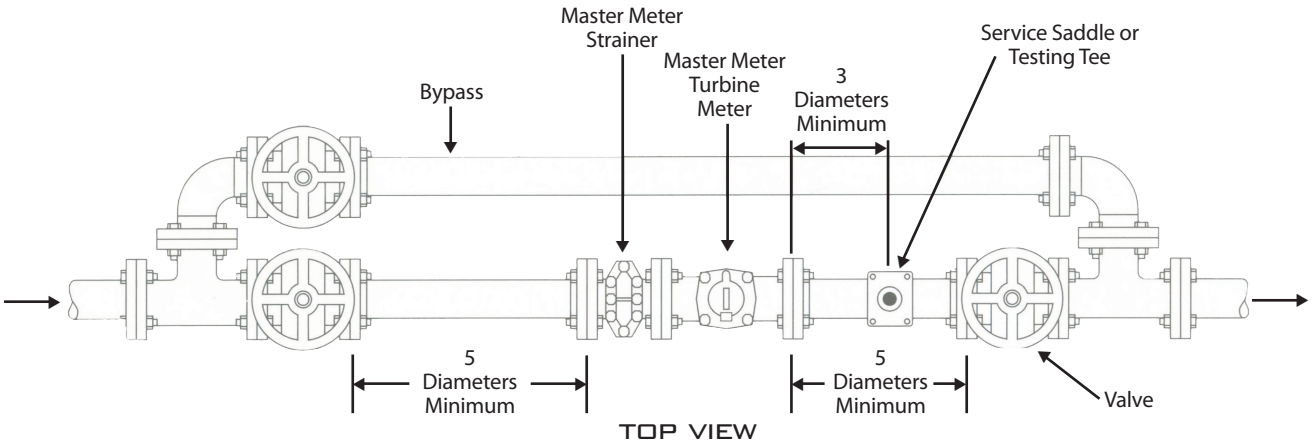

TOP VIEW

Master Meter, Inc. Because Everyone is a Water Manager ™
101 Regency Parkway, Mansfield, TX 76063
Toll Free: 800-765-6518 • Main Line: 817-842-8000 • FAX: 817-842-8100
MasterMeter.com

©2015 Master Meter, Inc. All rights reserved. DIALOG and Master Meter are registered trademarks of Master Meter, Inc. Master Meter reserves the right to make modifications to the products described herein at any time and without notice. U.S. Patent Nos. 6,819,292; 6,954,178; and others pending.

MULTI-JET METER INSTALLATION INSTRUCTIONS

The installation instructions detailed below are consistent with recommendations by the American Water Works Association in AWWA Manual M6, Water Meters-Selection, Installation, Testing, and Maintenance.

WE RECOMMEND IN THE DESIGN OF THE INSTALLATION:

1. The installation should include a high quality, low pressure loss shutoff valve upstream of the meter to prevent water damage to the customer property when service is required, a downstream shutoff valve is likewise recommended.

2. The meter should be installed in a horizontal plane, with the register upright, in a location accessible for reading, service and inspection.

3. The installation should be leak-tight, with properly sized gaskets. When meter connections are ordered from Master Meter, gaskets are provided. Appropriate gaskets and couplings also are available from a qualified waterworks distributor. Whenever a meter is pulled from the line, discard and replace the old gaskets.

4. Although AWWA opposes the grounding of electrical systems to potable water delivery lines, such practices do exist. To prevent accidental harm to service personnel, make certain that an electrical grounding strap is installed around the meter.

AT THE TIME OF INSTALLATION:

1. Thoroughly flush the service line upstream of the meter to remove dirt and debris.

2. Remove meter spud thread protectors. Note: To protect the meter spud threads, store the meter with the thread protectors in place.

3. Set the meter in the line. Arrows on the side of the meter and above the outlet spud indicate the direction of flow.

4. Do not over-tighten connections; tighten only as required to seal. Do not use pipe sealant or Teflon tape on meter threads.

5. With upstream shutoff valve only: Open the shutoff valve slowly, to remove air from meter and service line. Open a consumer faucet slowly to allow entrapped air to escape. Close the customer Faucet.

5.1. With upstream and downstream shutoff valves installed:

A. To test the installation for leaks: Close the outlet (downstream) shutoff valve. Open the inlet (upstream) shutoff slowly until the meter is full of water.

B. Open the outlet (downstream) valve slowly until air is out of the meter and service line. Open a customer faucet slowly to allow entrapped air to escape. Close the customer faucet.

6. When installing meters equipped with electronic registers that require connections to external devices, please refer to installation instructions or diagrams provided by Master Meter.

2” & 3” MMT Turbine Meters

Head Loss

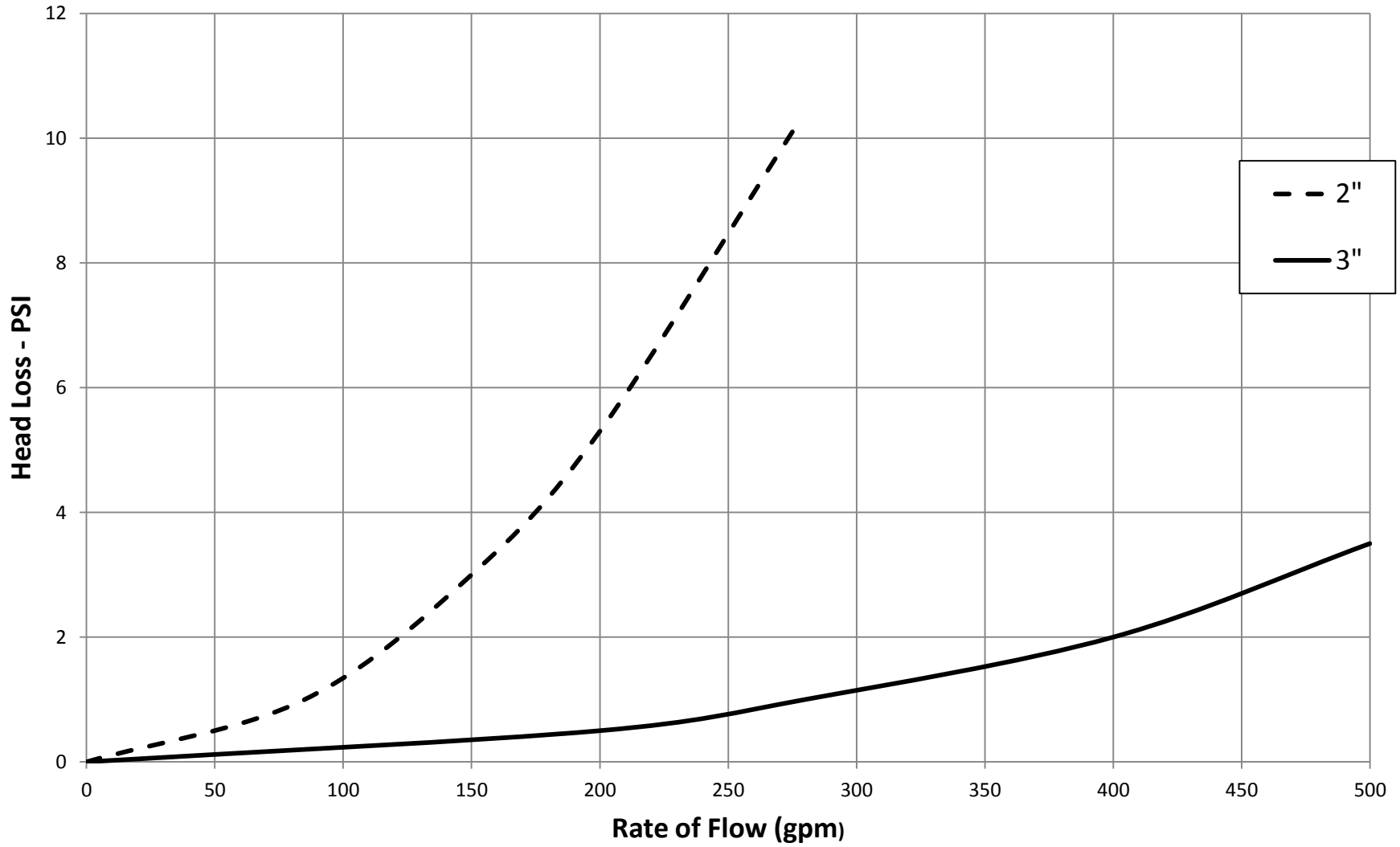

Master Meter, Inc. ‣ 101 Regency Parkway, Mansfield, TX 76063 ‣ Toll Free: 800-765-6518 • Main Line: 817-842-8000 • Fax: 817-842-8100 ‣ MasterMeter.com

Signet 515 Rotor-X Paddlewheel Flow Sensors

Standard Sensor (with red cap)

Integral Sensor

Wet-Tap Sensor

Simple to install with time-honored reliable performance, Signet 515 Rotor-X Paddlewheel Flow Sensors are highly repeatable, rugged sensors that offer exceptional value with little or no maintenance. The output signal of the Model 515 is a sinusoidal frequency capable of driving a self-powered flowmeter (Model 3-5090). The wide dynamic flow range of 0.3 to 6 m/s (1 to 20 ft/s) allows the sensor to measure liquid flow rates in full pipes and can be used in low pressure systems.

The Model 515 sensors are offered in a variety of materials for a wide range of pipe sizes and insertion configurations. The many material choices including PP and PVDF make this model highly versatile and chemically compatible to many liquid process solutions. Sensors can be installed in up to DN900 (36 in.) pipes using Signet's comprehensive line of custom fittings. These custom fittings, which include tees, saddles, and weldolets, seat the sensor to the proper insertion depth into the process flow. The sensors are also offered in configurations for wet-tap installation requirements.

Features

- **Operating range 0.3 to 6 m/s (1 to 20 ft/s)**
- **Wide turndown ratio of 20:1**
- **Highly repeatable output**
- **Simple, economical design**
- **Installs into pipe sizes DN15 to DN900 (½ to 36 in.)**
- **Self-powered/no external power required**
- **Test certificate included for -X0, -X1**
- **Chemically resistant materials**

Applications

- **Pure Water Production**
- **Filtration Systems**
- **Chemical Production**
- **Liquid Delivery Systems**
- **Pump Protection**
- **Scrubber Systems**
- **Water Monitoring**
- **Not suitable for gases**

Specifications

General			
Operating Range		0.3 to 6 m/s	1 to 20 ft/s
Pipe Size Range		DN15 to DN900	½ to 36 in.
Linearity		±1% of max. range @ 25 °C (77 °F)	
Repeatability		±0.5% of max. range @ 25 °C (77 °F)	
Min. Reynolds Number Required		4500	
Wetted Materials			
Sensor Body		Glass-filled PP (black) or PVDF (natural)	
O-rings		FPM (std), optional EPR (EPDM) or FFPM	
Rotor Pin		Titanium, Hastelloy-C or PVDF; optional Ceramic, Tantalum, or Stainless Steel	
Rotor		Black PVDF or Natural PVDF; optional ETFE, with or without carbon fiber reinforced PTFE sleeve	
Electrical			
Frequency		19.7 Hz per m/s nominal	6 Hz per ft/s sinusoidal
Amplitude		3.3 V p/p per m/s nominal	1 V p/p per ft/s
Source Impedance		8 KΩ	
Cable Type		2-conductor twisted pair with shield, 22 AWG	
Cable Length		7.6 m (25 ft) can be extended up to 60 m (200 ft) maximum	
Max. Temperature/Pressure Rating - Standard and Integral Sensor			
	PP	12.5 bar @ 20 °C	181 psi @ 68 °F
		1.7 bar @ 90 °C	25 psi @ 194 °F
	PVDF	14 bar @ 20 °C	203 psi @ 68 °F
		1.4 bar @ 100 °C	20 psi @ 212 °F
Operating Temperature			
	PP	-18 °C to 90 °C	0°F to 194 °F
	PVDF	-18 °C to 100 °C	0 °F to 212 °F
Max. Temperature/Pressure Rating - Wet-Tap Sensor			
	PP	7 bar @ 20 °C	102 psi @ 68 °F
		1.4 bar @ 66 °C	20 psi @ 150 °F
Operating Temperature			
		-18 °C to 66 °C	0 °F to 150 °F
Max. Wet-Tap Sensor Removal Rating			
		1.7 bar @ 22 °C	25 psi @ 72 °F
Shipping Weight			
	P51530-X0	0.454 kg	1.00 lb
	P51530-X1	0.476 kg	1.05 lb
	P51530-X2	0.680 kg	1.50 lb
	P51530-X3	0.780 kg	1.72 lb
	P51530-X4	0.800 kg	1.76 lb
	P51530-X5	0.880 kg	1.94 lb
	3-8510-X0	0.23 kg	0.50 lb
	3-8510-X1	0.23 kg	0.50 lb
Standards and Approvals			
		RoHS compliant	
		China RoHS	
		Manufactured under ISO 9001 for Quality and ISO 14001 for Environmental Management and OHSAS 18001 for Occupational Health and Safety	

See Temperature and Pressure Graphs for more information

Dimensions

Standard Mount

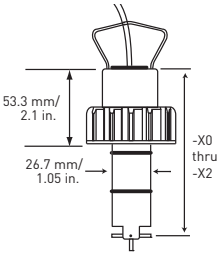

Pipe range	
0.5 to 4 in.	-X0 = 104 mm (4.1 in.)
5 to 8 in.	-X1 = 137 mm (5.4 in.)
10 in. and up	-X2 = 213 mm (8.4 in.)

Integral Mount
(shown with Transmitter sold separately)

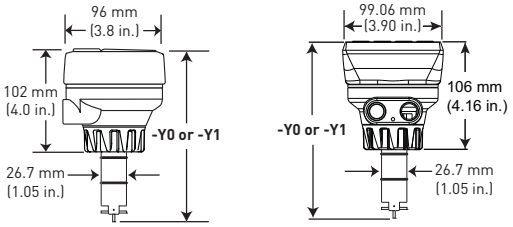

Pipe range	
0.5 to 4 in.	-Y0 = 152 mm (6.0 in.)
5 to 8 in.	-Y1 = 185 mm (7.3 in.)

Wet-Tap Mount Sensor with 3519 Wet-Tap Valve
(See 3519 product page for more information).

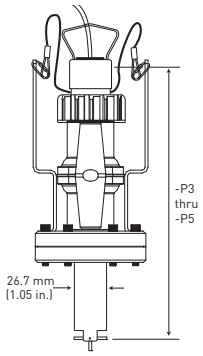

Pipe range	
0.5 to 4 in.	-P3 = 297 mm (11.7 in.)
5 to 8 in.	-P4 = 333 mm (13.1 in.)
10 in. and up	-P5 = 409 mm (16.1 in.)

System Overview

Panel Mount	Field Mount - Pipe, Tank, Wall	Integral Mount
Signet Instruments 5090 8150 8550 8900 9900 9900-1BC	Signet Instruments 8150 8550 9900 with 3-8050 Universal Mount Kit	Signet Instruments 8150 8550 9900 with 3-8051-X Integral Mount Kit

Signet 515 Standard or Wet-Tap Flow Sensor

Signet 8510 Integral Mount Flow Sensor

Signet Fittings

All sold separately

For overview of Wet-Tap System, see 3519 product page

Application Tips

- Use the Conduit Adapter Kit to protect the cable-to-sensor connection when used in outdoor environments. See Accessories section for more information.
- Use a sleeved rotor in abrasive liquids to reduce wear.
- Sensor plug can be used to plug installation fitting after extraction of sensor from pipe.
- For liquids containing ferrous particles, use Signet Magmeters.
- For systems with components of more than one material, the maximum temperature/pressure specification must always be referenced to the component with the lowest rating.

Operating Temperature/Pressure Graphs

Note:
The pressure/temperature graphs are specifically for the Signet sensor. During system design the specifications of all components must be considered. In the case of a metal piping system, a plastic sensor will reduce the system specification. When using a PVDF sensor in a PVC piping system, the fitting will reduce the system specification.

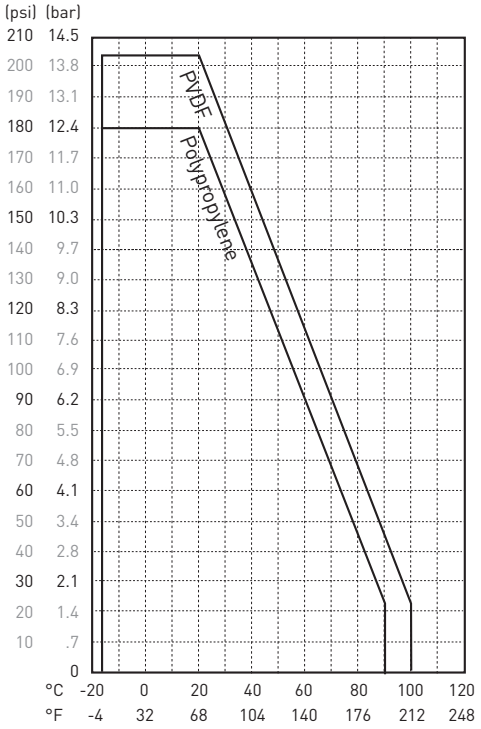

Ordering Notes

1) Most common part number combinations shown. For all other combinations contact factory.

2) Other rotor and pin materials are available for purchase from the factory and can be easily replaced in the field. See Accessories section.

Ordering Information

Model 515 Standard Mount Paddlewheel
When choosing this style of sensor, the instrument can be mounted nearby on a pipe or wall or in a remote location up to 61 m (200 ft) by connecting the sensor through a standard 3-8050-1 universal junction box. Standard cable length is 7.6 m (25 ft). Use Signet fittings for proper seating of the sensor into the process flow.

Mfr. Part No.	Code	Body	Rotor	Pin Material
Paddlewheel Flow Sensor for use with remote mount instrument				
Pipe size DN15 to DN100 - ½ to 4 in.				
P51530-H0	**198 801 659**	Polypropylene	Black PVDF	Hastelloy-C
P51530-P0	**198 801 620**	Polypropylene	Black PVDF	Titanium
P51530-S0	**198 801 661**	Polypropylene	Black PVDF	Natural PVDF
P51530-T0	**198 801 663**	Natural PVDF	Natural PVDF	Natural PVDF
P51530-V0	**198 801 623**	Natural PVDF	Natural PVDF	Hastelloy-C
Pipe size DN125 to DN200 - 5 to 8 in.				
P51530-P1	**198 801 621**	Polypropylene	Black PVDF	Titanium
P51530-T1	**198 801 664**	Natural PVDF	Natural PVDF	Natural PVDF
P51530-V1	**198 801 624**	Natural PVDF	Natural PVDF	Hastelloy-C
Pipe size DN250 - DN900 - 10 to 36 in.				
P51530-P2	**198 801 622**	Polypropylene	Black PVDF	Titanium
P51530-V2	**198 801 625**	Natural PVDF	Natural PVDF	Hastelloy-C

Ordering Information (continued)

Model 515 Integral Mount Paddlewheel
When choosing this style of sensor, the instrument is mounted directly onto the sensor for a local display. See guideline below for instructions.

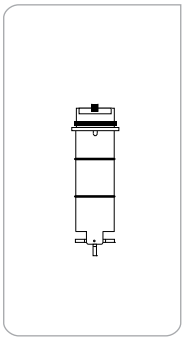

Mfr. Part No.	Code	Body	Rotor	Pin Material
Flow sensor for integral mounting on the 8150 or 8550 instrument using the 3-8051-X flow sensor integral mounting kit (sold separately)				
DN15 to DN100 - ½ to 4 in.				
3-8510-P0	**198 864 504**	Polypropylene	Black PVDF	Titanium
3-8510-T0	**159 000 622**	Natural PVDF	Natural PVDF	Natural PVDF**
3-8510-V0	**198 864 506**	Natural PVDF	Natural PVDF**	Hastelloy-C**
DN125 to DN200 - 5 to 8 in.				
3-8510-P1	**198 864 505**	Polypropylene	Black PVDF	Titanium

**PVDF available ½ in. to 4 in. only

Combining a 515 Integral mount flow sensor with an integrally mounted instrument

Option 1
Once an integral mount sensor is chosen, it can be mounted directly to a field mount transmitter by following these guidelines:

a) Order the 3-8051-X flow sensor integral mounting kit (sold separately) to connect the sensor to an instrument.
b) Order a field mount transmitter (sold separately). The following part numbers are compatible: 3-8550-3, 3-8150-1, 3-9900-1.
c) Assembling the sensor with the integral adapter and instrument is quick and simple.

Model 515 Wet-Tap Mount Paddlewheel Flow Sensor
When choosing this style of sensor, the instrument can be mounted nearby on a pipe or wall or in a remote location up to 61 m (200 ft) by connecting the sensor through a standard 3-8050-1 universal junction box. Standard cable length is 7.6 m (25 ft). This style of sensor uses the 3519 Wet-Tap valve only (see individual product page for more information).

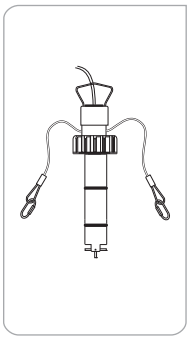

Mfr. Part No.	Code	Body	Rotor	Pin Material
Flow Sensor for wet-tap mounting with the 3519 Wet-Tap Valve (sold separately)				
DN15 to DN100 - ½ to 4 in.				
P51530-P3	**198 840 310**	Polypropylene	Black PVDF	Titanium
DN125 to DN200 - 5 to 8 in.				
P51530-P4	**198 840 311**	Polypropylene	Black PVDF	Titanium
DN250 to DN900 - 10 to 36 in.				
P51530-P5	**198 840 312**	Polypropylene	Black PVDF	Titanium

Combining a 515 Wet-Tap Sensor with a 3519 Wet-Tap Valve

a) Sensor can be mounted in a 3519 Wet-Tap Valve (sold separately)
b) Assembling a sensor with a 3519 Wet-Tap valve is quick and simple. These parts can also be ordered as complete assemblies. See 3519 product page.

Please refer to Wiring, Installation, Accessories and Fittings sections for more information.

Accessories and Replacement Parts

Mfr. Part No.	Code	Description
M1538-2	**198 801 181**	Rotor, PVDF Black
M1538-3	**159 001 732**	Rotor, PVDF Natural
M1538-4	**198 820 018**	Rotor, ETFE
3-0515.322-1	**198 820 059**	Sleeved rotor, PVDF Black
3-0515.322-2	**198 820 060**	Sleeved rotor, PVDF Natural
3-0515.322-3	**198 820 017**	Sleeved rotor, ETFE
Rotor Pins		
M1546-1	**198 801 182**	Pin, Titanium
M1546-2	**198 801 183**	Pin, Hastelloy-C
M1546-3	**198 820 014**	Pin, Tantalum
M1546-4	**198 820 015**	Pin, Stainless Steel
P51545	**198 820 016**	Pin, Ceramic
O-Rings		
1220-0021	**198 801 000**	O-ring, FPM (2 required per sensor)
1224-0021	**198 820 006**	O-ring, EPR (EPDM) (2 required per sensor)
1228-0021	**198 820 007**	O-ring, FFPM (2 required per sensor)
Miscellaneous		
P31536	**198 840 201**	Sensor plug, Polypropylene
P31542	**198 801 630**	Sensor cap, Red
P31934	**159 000 466**	Conduit cap
P51550-3	**198 820 043**	PVDF natural, Rotor kit
P51589	**159 000 476**	Conduit adapter kit
5523-0222	**159 000 392**	Cable (per foot), 2 cond. w/shield, 22 AWG
3-8050	**159 000 184**	Universal mounting kit
3-8051-1	**159 001 755**	Transmitter integral mounting kit, NPT, PP (for use with 8510 and 8512)
3-8051-2	**159 001 756**	Transmitter integral mounting kit, NPT, PVDF (for use with 8510 and 8512)
3-8050.390-1	**159 001 702**	Retaining nut replacement kit, NPT, Valox
3-8050.390-3	**159 310 116**	Retaining nut replacement kit, NPT, PP
3-8050.390-4	**159 310 117**	Retaining nut replacement kit, NPT, PVDF
3-8051	**159 000 187**	Transmitter integral mount kit (for use with 8510 and 8512)
3-8050-1	**159 000 753**	Universal mount junction box

3-0515.099 Rev H (4/13)
© Georg Fischer Signet LLC
3401 Aero Jet Avenue, El Monte, CA 91731-2882 U.S.A. • Tel. (626) 571-2770 • Fax (626) 573-2057 • www.gfsignet.com • e-mail: signet.ps@georgfischer.com
Specifications subject to change without notice. All rights reserved. All corporate names and trademarks stated herein are the property of their respective companies.

English

Signet 515/2536 Rotor-X Flow Sensors

3-0515.090 Rev T 06/13

Operating Instructions

515 Sensor (with red cap)

8510 Integral Sensor

2536 Sensor (with blue cap)

8512 Integral Sensor

Description

Operating Instructions for all versions of 515/8510 and 2536/8512

Simple to install with time-honoured reliable performance, Signet 515 and 2536 Rotor-X Paddlewheel Flow Sensors are highly repeatable, rugged sensors that offer exceptional value with little or no maintenance.

Signet 515 and 2536 sensors measure liquid flow rates in full pipes and can be used in low pressure systems.

- The many material choices including PP and PVDF make this model highly versatile and chemically compatible with many liquid process solutions.
- Sensors can be installed in DN15 to DN900 (½ to 36 in.) pipes using Signet's comprehensive line of custom fittings
- These custom fittings, which include tees, saddles, and weldolets, seat the sensor to the proper insertion depth into the process flow.
- The sensors are also offered in configurations for wet-tap installation requirements.

515/8510 Advantages:

- Flow rate range 0.3 to 6 m/s (1 to 20 ft/s)
- Installs into pipe sizes DN15 to DN900 (½ to 36 in.)
- Wide Turndown Ratio of 20:1
- Sinusoidal frequency output capable of driving a self-powered flowmeter (Model 5090)
- Self-powered
- Highly repeatable output
- Chemically resistant materials
- Easy to replace rotor

2536/8512 Advantages:

- Flow rate range 0.1 to 6 m/s (0.3 to 20 ft/s)
- Installs into pipe sizes DN15 to DN900 (½ to 36 in.)
- Wide Turndown Ratio of 66:1
- Open-collector output
- High resolution and noise immunity
- Chemically resistant materials
- Easy to replace rotor

Warranty Information

Refer to your local Georg Fischer Sales office for the most current warranty statement.

All warranty and non-warranty repairs being returned must include a fully completed Service Form and goods must be returned to your local GF Sales office or distributor. Product returned without a Service Form may not be warranty replaced or repaired.

Signet products with limited shelf-life (e.g. pH, ORP, chlorine electrodes, calibration solutions; e.g. pH buffers, turbidity standards or other solutions) are warranted out of box but not warranted against any damage, due to process or application failures (e.g. high temperature, chemical poisoning, dry-out) or mishandling (e.g. broken glass, damaged membrane, freezing and/or extreme temperatures).

Product Registration

Thank you for purchasing the Signet line of Georg Fischer measurement products.
If you would like to register your product(s),
you can now register online in one of the following ways:

- Visit our website **www.gfsignet.com** and click on **Product Registration Form**
- If this is a pdf manual (digital copy), **click here**
- Scan the QR Code on the left

Safety Information

1. Depressurize and vent system prior to installation or removal.
2. Confirm chemical compatibility before use.
3. DO NOT exceed maximum temperature or pressure specs.
4. ALWAYS wear safety goggles or faceshield during installation and/or service.
5. DO NOT alter product construction.

	Warning / Caution / Danger Indicates a potential hazard. Failure to follow all warnings may lead to equipment damage, injury, or death
	Personal Protective Equipment (PPE) Always utilize the most appropriate PPE during installation and service of Signet products.
	Pressurized System Warning Sensor may be under pressure, take caution to vent system prior to installation or removal. Failure to do so may result in equipment damage and/or serious injury.
	Hand Tighten Only Overtightening may permanently damage product threads and lead to failure of the retaining nut.
	Do Not Use Tools Use of tool(s) may damage product beyond repair and potentially void product warranty.
	Note / Technical Notes Highlights additional information or detailed procedure.

Chemical Compatibility

Georg Fischer Signet products are manufactured in a variety of wetted materials to suit various liquids and chemicals.

All plastic materials including typical piping types (PVC, PVDF, PP and PE) are more or less permeable to contained media, such as water or volatile substances, including some acids. This effect is not related to porosity, but purely a matter of gas diffusion through the plastic.

If the plastic material is compatible with the medium according to the application guidelines, the permeation will not damage the plastic itself. However, if the plastic encloses other sensitive components, as is the case with GF Signet plastic paddlewheel sensors, these may be affected or damaged by the media diffusing through the plastic body and rotor.

Failures of PVDF paddlewheel sensors when used in hot nitric acid applications have been reported. PVDF is known to allow for substantial permeation of nitric acid constituents without being damaged itself. No clear guideline can be given here, since the damaging effect to the sensor is highly dependent on temperature, pressure and concentration.

Utilizing sensors in applications with aggressive substances is possible. On special request GF Signet can provide sensors with a different internal resin encapsulation (potting) that will delay the damaging effect of acids to the sensors.

For all Special Product inquiries or to place an order, please email **signet-specialproduct@georgfischer.com.**

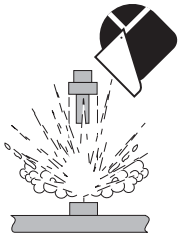

WARNING!

Paddlewheel Retaining Nuts:
Red (515) and Blue (2536)

The retaining nuts of paddlewheel sensors are not designed for prolonged contact with aggressive substances. Strong acids, caustic substances and solvents or their vapor may lead to failure of the retaining nut, ejection of the sensor and loss of the process fluid with possibly serious consequences, such as damage to equipment and serious personal injury. Retaining nuts that may have been in contact with such substances, e.g. due to leakage or spilling, must be replaced.

Table of Contents

Description 1
Warranty Statement 2
Product Registration 2
Safety Information 2
Chemical Compatibility 2
Table of Contents 3
Dimensions 3
Specifications 4
Location of Fitting 5
Sensor Mounting Position 5
Standard Sensor Installation 5
Sensor Wiring 5
Rotor Replacement Procedure 5
K-Factors 6
H-Dimensions 6
Signet Fittings 7
Ordering Information (515/8510) 7
Ordering Information (2536/8512) 8

Dimensions

515/2536 Sensor

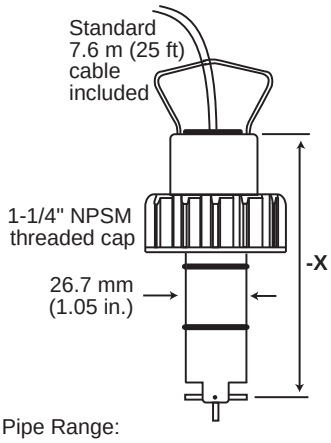

Pipe Range:	
1/2 in. to 4 in.	**-X**0 = 104 mm (4.1 in.)
5 in. to 8 in.	**-X**1 = 137 mm (5.4 in)
10 in. and up	**-X**2 = 213 mm (8.4 in.)
1/2 in. to 4 in.	**-X**3 = 297 mm (11.7 in.)
5 in. to 8 in.	**-X**4 = 332 mm (13.1 in.)
10 in. and up	**-X**5 = 408 mm (16.1 in.)

Wet-tap Lengths

8510-XX/8512-XX Integral Sensor shown with Transmitter and Integral Adapter Kit (sold separately)

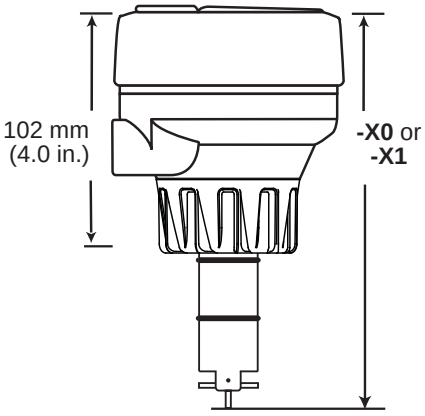

-X0 = 152 mm (6.0 in.)
-X1 = 185 mm (7.3 in.)

Specifications

General

Flow Rate Range:
- 515 ..... 0.3 to 6 m/s (1 to 20 ft/s)
- 2536 ..... 0.1 to 6 m/s (0.3 to 20 ft/s)

Pipe Size Range ..... DN15 to DN900 (½ in. to 36 in.)
Cable Length ..... 7.6 m (25 ft) standard
- 515 ..... 60 m (200 ft) maximum
- 2536 ..... 305 m (1000 ft) maximum

Cable type ..... 2-conductor twisted pair w/ shield (22 AWG)
Minimum Reynolds Number .. 4500

Materials:
Cap Material ..... Glass Filled Polypropylene
515: Red
2536: Blue

Wetted Materials:
Sensor Body ..... Glass Filled Polypropylene (black) or PVDF
O-Rings ..... FPM (Std), EPR (EPDM) or FFPM optional
Pin ..... Titanium, Hastelloy-C or PVDF; optional Ceramic, Tantalum, or Stainless Steel
Rotor ..... Black PVDF or Natural PVDF; optional ETFE with or without carbon fiber reinforced PTFE sleeve for rotor pin

Shipping Weight:
- -X0 ..... 0.454 kg (1 lb)
- -X1 ..... 0.476 kg (1.04 lbs)
- -X2 ..... 0.680 kg (1.50 lbs)
- -X3 ..... 0.794 kg (1.75 lbs)
- -X4 ..... 0.850 kg (1.87 lbs)
- -X5 ..... 1.0 kg (2.20 lbs)
- 3519 ..... 1.3 kg (2.86 lbs)

Performance

Linearity ..... ±1% of maximum range @ 25 °C (77 °F)
Repeatability ..... ±0.5% maximum range @ 25 °C (77 °F)

Electrical

515 Sensor

Frequency ..... 19.7 Hz per m/s nominal (6 Hz per ft/s)
Amplitude ..... 3.3 V p/p per m/s nominal (1V p/p per ft/s)
Source Impedance ..... 8 kΩ

2536 Sensor

Frequency ..... 49 Hz per m/s nominal (15 Hz per ft/s nominal)
Supply Voltage ..... 5 to 24 VDC ±10% regulated
Supply Current ..... <1.5 mA @ 3.3 to 6 VDC
<20 mA @ 6 to 24 VDC
Output Type ..... Open collector, sinking
Output Current ..... 10 mA maximum

Environmental Requirements

Pressure/Temperature Ratings

Standard and Integral Sensors:

Polypropylene Body ..... 12.5 bar (180 psi) max. @ 20 °C (68 °F)
- 515 ..... 1.7 bar (25 psi) max. @ 90 °C (194 °F)
- 2536 ..... 1.7 bar (25 psi) max. @ 85 °C (185 °F)
- Operating Temperature ..... -18 °C to 66 °C (0 °F to 150 °F)

PVDF Body ..... 14 bar (200 psi) max. @ 20 °C (68 °F)
- 515 ..... 1.7 bar (25 psi) max. @ 100 °C (212 °F)
- 2536 ..... 1.7 bar (25 psi) max. @ 85 °C (185 °F)
- Operating Temperature ..... -18 °C to 100 °C (0 °F to 212 °F)

Wet-Tap Sensor:

Polypropylene Body ..... 7 bar @ 20 °C, 1.4 bar @ 66 °C (100 psi @ 68 °F, 20 psi @ 150 °F)
- Max Removal Rating ..... 1.7 bar @ 22 °C (25 psi @ 72 °F)
- Operating Temperature ..... -18 °C to 66 °C (0 °F to 150 °F)

Standards and Approvals

- CE (2536 Only)
- Manufactured under ISO 9001 for Quality, ISO 14001 for Environmental Management and OHSAS 18001 for Occupational Health and Safety.
- RoHS Compliant

China RoHS (Go to www.gfsignet.com for details)

Declaration of Conformity according to FCC Part 15
This device complies with Part 15 of the FCC rules. Operation is subject to the following two conditions:
(1) This device may not cause harmful interference, and
(2) This device must accept any interference received, including interference that may cause undesired operation.

515 (8510) Sensor

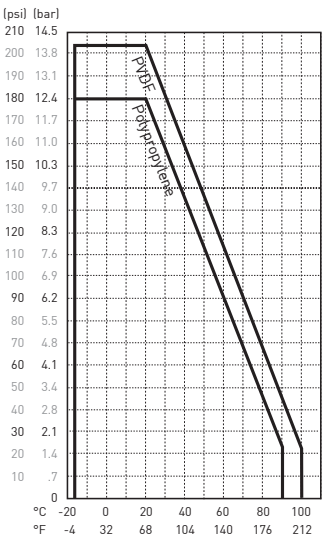

2536 (8512) Sensor

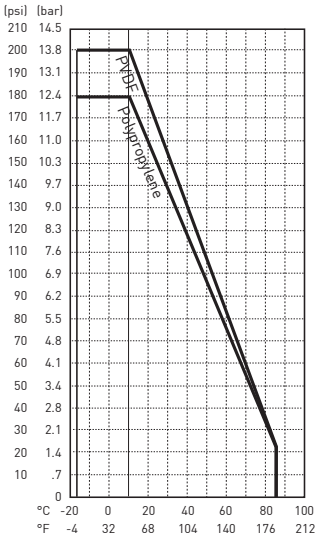

Location of Fitting

Recommended sensor upstream/downstream mounting requirements.

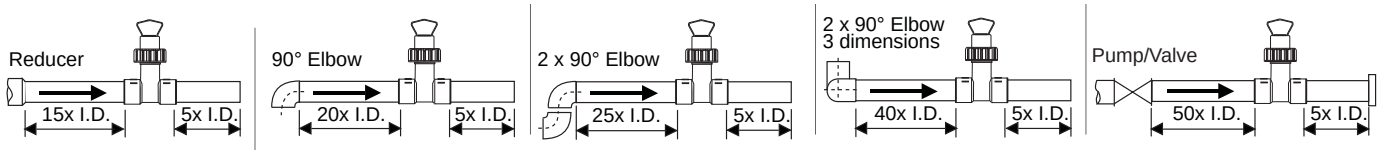

Sensor Mounting Position

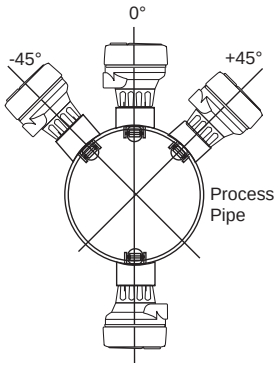

Horizontal pipe runs:

- Mount sensor in the upright (0°) position for best performance (pipe must be full).
- Mount at a maximum of 45° when air bubbles are present.
- Do not mount on the bottom of the pipe when sediments are present.

Vertical pipe runs:

- Mount sensor in any orientation.
- Upward flow is preferred to ensure full pipe.

Standard Sensor Installation

- Lubricate O-rings with a non-petroleum based, viscous lubricant (grease) compatible with the system.
- Using an alternating/twisting motion, lower the sensor into the fitting, making sure the installation arrows on the black cap are pointing in the direction of flow, see Figure A.
- Engage one thread of the sensor cap then turn the sensor until the alignment tab is seated in the fitting notch.

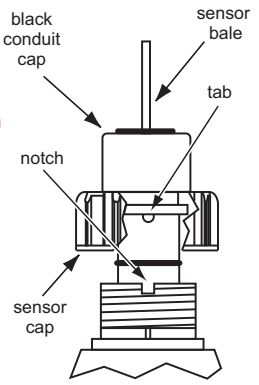

Figure B

Hand tighten the sensor cap. DO NOT use any tools on the sensor cap or the cap threads and/or fitting flange threads will be damaged, see Figure B.

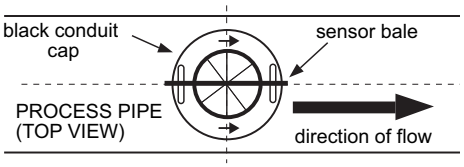

Figure A

Sensor Wiring

Technical Notes

- Use 2-conductor shielded cable for cable extensions.
- Cable shield must be maintained through cable splice.
- Refer to your instrument manual for specific wiring details.

515 Sensor Connections to Signet Instruments

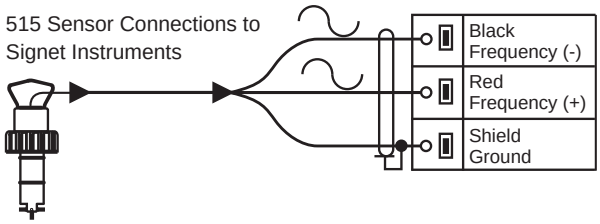

2536 Sensor Connections to Other Brand Instruments

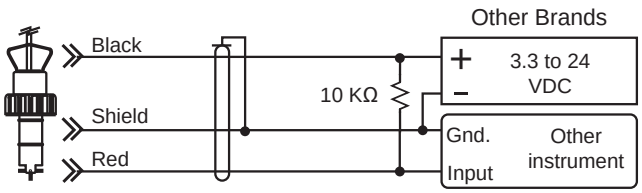

- DC sensor power supplied from Signet instrument.
  10 KΩ Pull-up resistor may be required for non-Signet brand instrument.

2536 Sensor Connections to Signet Instruments

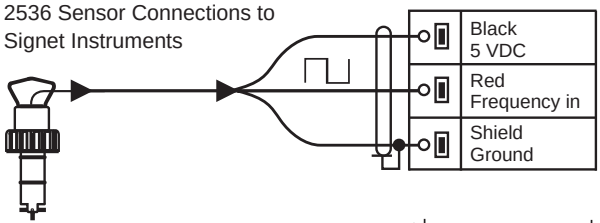

Rotor Replacement Procedure

- To remove the rotor, insert a small screwdriver between the rotor and the ear of the sensor.
- Twist the screwdriver blade to flex the ear outward enough to remove one end of the rotor and pin.
- DO NOT flex the ear any more than necessary! If it breaks, the sensor cannot be repaired.
- Install the new rotor by inserting one tip of the pin into the hole, then flex the opposite ear back enough to slip rotor into place.

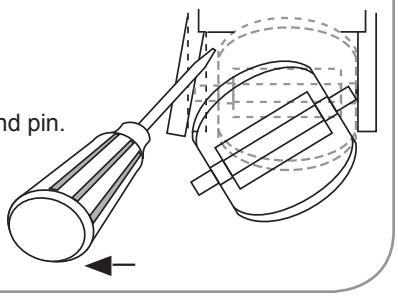

K-Factors

A **K-Factor** is the number of pulses a sensor will generate for each engineering unit of fluid that passes the sensor. K-factors for water are listed below in U.S. gallons and liters. For example, in a 1-inch PVC pipe, the 515 paddlewheel generates 172.07 pulses per gallon of water passing the rotor. K-factors are listed for pipes up to 12 inches. For pipes over 12 inches, consult your Signet distributor.

PIPE SIZE (IN.)	FITTING	515/8510-XX		2536/8512-XX	
		LITERS	U.S. GAL	LITERS	U.S. GAL
SCH 80 PVC TEES FOR SCH 80 PVC PIPE					
1/2	MPV8T005	137.42	520.12	271.37	1027.1
3/4	MPV8T007	78.61	297.52	154.08	583.19
1	MPV8T010	45.46	172.07	88.65	335.53
1-1/4	MPV8T012	24.19	91.54	47.24	178.79
1-1/2	MPV8T015	16.44	62.22	32.08	121.42
2	MPV8T020	9.60	36.32	18.87	71.44
SCH 80 PVC TEES FOR SCH 80 PVC PIPE					
2-1/2	PV8T025	5.7683	21.833	11.359	42.994
3	PV8T030	3.5775	13.541	7.0414	26.652
4	PV8T040	2.0147	7.6258	3.9645	15.006
SCH 80 CPVC TEES FOR SCH 80 CPVC PIPE					
1/2	MCPV8T005	137.42	520.12	271.37	1027.1
3/4	MCPV8T007	78.61	297.52	154.08	583.19
1	MCPV8T010	45.46	172.07	88.65	335.53
1-1/4	MCPV8T012	24.19	91.54	47.24	178.79
1-1/2	MCPV8T015	16.44	62.22	32.08	121.42
2	MCPV8T020	9.60	36.32	18.87	71.44
SCH 80 PVC SADDLES FOR SCH 80 PVC PIPE					
2	PV8S020	8.5812	32.480	17.633	66.739
2-1/2	PV8S025	5.7683	21.833	11.359	42.994
3	PV8S030	3.5775	13.541	7.0414	26.652
4	PV8S040	2.0147	7.6258	3.9645	15.006
6	PV8S060	1.0997	4.1623	2.1994	8.3246
8	PV8S080	0.6263	2.3705	1.3253	5.0164
10	PV8S100	0.4042	1.5300	0.808	3.0600
12	PV8S120	0.2801	1.0600	0.571	2.1600
SCH 80 PVC SADDLE ON SCH 40 PVC PIPE					
2	PV8S020	7.2259	27.350	14.452	54.700
2-1/2	PV8S025	4.9866	18.874	9.8175	37.159
3	PV8S030	3.3389	12.638	6.2608	23.697
4	PV8S040	1.7776	6.7282	3.5552	13.456
6	PV8S060	0.9854	3.7297	1.9708	7.4594
8	PV8S080	0.5688	2.1527	1.1966	4.5292
10	PV8S100	0.3567	1.3500	0.740	2.8000
12	PV8S120	0.2536	0.9600	0.523	1.9800

PIPE SIZE (IN.)	FITTING	515/8510-XX		2536/8512-XX	
		LITERS	U.S. GAL	LITERS	U.S. GAL
CARBON STEEL TEES ON SCH 40 PIPE					
1/2	CS4T005	97.808	370.20	199.74	756.00
3/4	CS4T007	56.027	212.06	115.90	438.69
1	CS4T010	37.289	141.14	75.768	286.78
1-1/4	CS4T012	16.025	60.655	32.026	121.22
1-1/2	CS4T015	11.982	45.350	24.079	91.139
2	CS4T020	7.0717	26.767	14.391	54.468
STAINLESS STEEL TEES ON SCH 40 PIPE					
1/2	CR4T005	94.838	358.96	193.98	734.20
3/4	CR4T007	53.530	202.61	108.88	412.10
1	CR4T010	33.590	127.14	66.764	252.70
1-1/4	CR4T012	16.357	61.910	33.849	128.12
1-1/2	CR4T015	10.676	40.410	20.428	77.320
2	CR4T020	5.8917	22.300	12.095	45.780
GALVANIZED IRON TEES ON SCH 40 PIPE					
1	IR4T010	27.619	104.54	56.277	213.01
1-1/4	IR4T012	16.639	62.979	33.751	127.75
1 1/2	IR4T015	12.335	46.688	24.941	94.401
2	IR4T020	7.7832	29.459	15.699	59.420
BRONZE TEES ON SCH 40 PIPE					
1	BR4T010	27.619	104.54	56.277	213.01
1-1/4	BR4T012	16.639	62.979	33.751	127.75
1-1/2	BR4T015	12.335	46.688	24.941	94.401
2	BR4T020	7.7832	29.459	15.699	59.420
COPPER TEE FITTINGS ON COPPER PIPE SCH K					
1/2	CUKT005	117.10	443.21	242.50	917.84
3/4	CUKT007	56.052	212.16	113.15	428.27
1	CUKT010	33.600	127.18	67.749	256.43
1-1/4	CUKT012	23.307	88.218	46.615	176.44
1-1/2	CUKT015	15.049	56.962	30.565	115.69
2	CUKT020	7.7595	29.370	16.746	63.385
COPPER TEE FITTINGS ON COPPER PIPE SCH L					
1/2	CUKT005	109.49	414.41	226.74	858.22
3/4	CUKT007	50.485	191.09	101.91	385.74
1	CUKT010	31.662	119.84	63.841	241.64
1-1/4	CUKT012	22.576	85.451	45.152	170.90
1-1/2	CUKT015	14.573	55.160	29.598	112.03
2	CUKT020	7.5575	28.605	16.310	61.74

PIPE SIZE (IN.)	FITTING	515/8510-XX		2536/8512-XX	
		LITERS	U.S. GAL	LITERS	U.S. GAL
STAINLESS STEEL WELDOLETS ON SCH 40 PIPE					
2-1/2	CR4W025	4.9670	18.800	9.9339	37.600
3	CR4W030	3.2153	12.170	6.4306	24.340
4	CR4W040	1.8388	6.9600	3.6777	13.920
5	CR4W050	1.3897	5.2600	2.8692	10.860
6	CR4W060	0.9749	3.6900	1.9868	7.5200
8	CR4W080	0.5627	2.1300	1.1466	4.3400
10	CR4W100	0.3567	1.3500	0.7292	2.7600
12	CR4W120	0.2536	0.9600	0.5125	1.9400
CARBON STEEL WELDOLETS ON SCH 40 PIPE					
2-1/2	CS4W025	4.9670	18.800	9.9339	37.600
3	CS4W030	3.2153	12.170	6.4306	24.340
4	CS4W040	1.8388	6.9600	3.6777	13.920
5	CS4W050	1.3897	5.2600	2.8692	10.860
6	CS4W060	0.9749	3.6900	1.9868	7.5200
8	CS4W080	0.5627	2.1300	1.1466	4.3400
10	CS4W100	0.3567	1.3500	0.7292	2.7600
12	CS4W120	0.2536	0.9600	0.5125	1.9400
COPPER/BRONZE BRAZOLETS ON SCH 40 PIPE					
2-1/2	BR4B025	4.9670	18.800	9.934	37.600
3	BR4B030	3.2153	12.170	6.431	24.340
4	BR4B040	1.8388	6.9600	3.678	13.920
5	BR4B050	1.3897	5.2600	2.869	10.860
6	BR4B060	0.9749	3.6900	1.987	7.5200
8	BR4B080	0.5627	2.1300	1.147	4.3400
10	BR4B100	0.3567	1.3500	0.729	2.7600
12	BR4B120	0.2536	0.9600	0.513	1.9400
SCH 80 IRON SADDLES ON SCH 80 PIPE					
2	IR8S020	8.5495	32.360	17.099	64.720
2-1/2	IR8S025	5.8705	22.220	11.223	42.480
3	IR8S030	3.5456	13.420	6.980	26.420
4	IR8S040	2.0238	7.6600	3.884	14.700
5	IR8S050	1.5482	5.8600	3.218	12.180
6	IR8S060	1.0806	4.0900	2.230	8.4400
8	IR8S080	0.6156	2.3300	1.295	4.9000
10	IR8S100	0.4042	1.5300	0.808	3.0600
12	IR8S120	0.2801	1.0600	0.571	2.1600
SCH 80 IRON SADDLE ON SCH 40 PIPE					
2	IR8S020	7.0859	26.820	14.172	53.640
2-1/2	IR8S025	4.9670	18.800	9.934	37.600
3	IR8S030	3.1678	11.990	6.135	23.220
4	IR8S040	1.8098	6.8500	3.503	13.260
5	IR8S050	1.4082	5.3300	2.917	11.040
6	IR8S060	0.9934	3.7600	1.913	7.2400
8	IR8S080	0.5627	2.1300	1.162	4.4000
10	IR8S100	0.3567	1.3500	0.740	2.8000
12	IR8S120	0.2536	0.9600	0.523	1.9800

H-Dimensions

The plastic sensor insert in the Weldolet fitting MUST be removed during the welding process. When reinstalled, it is important that the insert be threaded to the proper height ("H" dimension).

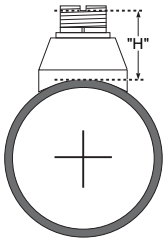

Weldolet part number	"H" dimension mm	"H" dimension inches		Weldolet part number	"H" dimension mm	"H" dimension inches
CS4W020	60.45	2.38		CS4W240	105.66	4.16
CS4W025	62.99	2.48		CS4W360	104.14	4.10
CS4W030	62.73	2.47				
CS4W040	62.23	2.45		CR4W020	60.45	2.38
CS4W050	82.29	3.24		CR4W025	62.99	2.48
CS4W060	78.99	3.11		CR4W030	62.73	2.47
CS4W080	73.15	2.88		CR4W040	62.23	2.45
CS4W100	143.00	5.63		CR4W050	82.29	3.24
CS4W120	137.16	5.25		CR4W060	78.99	3.11
CS4W140	129.54	5.40		CS4W080	73.15	2.88
CS4W160	123.19	4.85		CR4W100	143.00	5.63
CS4W180	116.84	4.60		CR4W120	137.16	5.40
CS4W200	111.25	4.38				

K-Factors DIN Pipes

PIPE SIZE	FITTING	515/8510-XX		2536/8512-XX	
		LITERS	U.S. GAL	LITERS	U.S. GAL
POLYPROPYLENE FITTINGS (DIN/ISO AND BS AND ANSI)					
DN 15	PPMT005	127.23	481.55	251.75	952.87
DN 20	PPMT007	73.207	277.09	148.77	563.10
DN 25	PPMT010	37.300	141.18	77.042	291.60
DN 32	PPMT012	22.071	83.540	44.709	169.22
DN 40	PPMT015	13.544	51.265	27.450	103.90
DN 50	PPMT020	7.8193	29.596	16.060	60.789
PVDF FITTINGS (DIN/ISO AND BS AND ANSI)					
DN 15	SFMT005	111.19	420.87	218.56	827.26
DN 20	SFMT007	60.277	228.15	129.42	489.87
DN 25	SFMT010	36.116	136.70	74.915	283.55
DN 32	SFMT012	20.950	79.294	41.899	158.59
DN 40	SFMT015	11.490	43.490	22.980	86.980
DN 50	SFMT020	6.8450	25.908	13.312	50.385
PVC FITTINGS (DIN/ISO) - EUROPE ONLY					
DN 15	PVMT005	128.45	486.18	256.90	972.37
DN 20	PVMT007	64.160	242.85	128.32	485.69
DN 25	PVMT010	39.270	148.64	78.540	297.274
DN 32	PVMT012	22.490	85.125	44.980	170.249
DN 40	PVMT015	13.700	51.855	27.400	103.709
DN 50	PVMT020	7.8600	29.750	15.720	59.500

Signet Fittings

Type	Description
Plastic tees 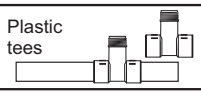	• 0.5 to 2 inch versions • MPVC or CPVC
PVC Glue-on Saddles	• Available in 10 and 12 inch sizes only • Cut 2-1/2 inch hole in pipe • Weld in place using solvent cement
PVC Clamp-on Saddles	• 2 to 4 inch, cut 1-7/16 inch hole in pipe • 6 to 8 inch, cut 2-1/8 inch hole in pipe
Iron Strap-on saddles	• 2 to 4 inch, cut 1-7/16 inch hole in pipe • Over 4 inch, cut 2-1/8 inch hole in pipe • Special order 14 in. to 36 in.

Type	Description
Iron, Carbon Steel, 316 SS Threaded tees	• 0.5 to 2 in. versions • Mounts on threaded pipe ends
Carbon steel & stainless steel Weld-on Weldolets	• 2 to 4 inch, cut 1-7/16 inch hole • Over 4 inch, cut 2-1/8 inch hole in pipe
Fiberglass tees 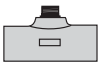 FPT	• 1.5 in. to 2 in. PVDF insert
Metric Union Fitting	• For pipes from DN 15 to 50 mm • PP or PVDF

Ordering Information

515/8510-XX

Mfr. Part No.	Code	Description
P51530-H0	198 801 659	Sensor, Polypropylene, Hastelloy-C, Black PVDF; 0.5 to 4 inch
P51530-P0	198 801 620	Sensor, Polypropylene, Titanium Rotor Pin, PVDF Rotor (black), 0.5 to 4 inch
P51530-P1	198 801 621	Sensor, Polypropylene, Titanium Rotor Pin, PVDF Rotor (black) 5 to 8 inch
P51530-P2	198 801 622	Sensor, Polypropylene, Titanium Rotor Pin, PVDF Rotor (black) 10 to 36 inch
P51530-P3	198 840 310	Sensor, Wet-Tap, Polypropylene, Titanium Rotor Pin, PVDF Rotor (black), 0.5 to 4 inch
P51530-P4	198 840 311	Sensor, Wet-Tap, Polypropylene, Titanium Rotor Pin, PVDF Rotor (black) 5 to 8 inch
P51530-P5	198 840 312	Sensor, Wet-Tap, Polypropylene, Titanium Rotor Pin, PVDF Rotor (black) 10 to 36 inch
P51530-S0	198 801 661	Sensor, polypropylene, PVDF (natural), Black PVDF; 0.5 to 4 inch
P51530-T0	198 801 663	Sensor, PVDF (natural), PVDF (nat.) Rotor Pin, PVDF Rotor (nat.), 0.5 to 4 inch
P51530-T1	198 801 664	Sensor, PVDF (natural), PVDF (nat.) Rotor Pin, PVDF Rotor (nat.), 5 to 8 inch
P51530-V0	198 801 623	Sensor, PVDF (natural), Hastelloy-C Rotor Pin, PVDF Rotor (natural), 0.5 to 4 inch
P51530-V1	198 801 624	Sensor, PVDF (natural), Hastelloy-C Rotor Pin, PVDF Rotor (natural), 5 to 8 inch
P51530-V2	198 801 625	Sensor, PVDF (natural), Hastelloy-C Rotor Pin, PVDF Rotor (natural), 10 to 36 inch
3-8510-P0	198 864 504	Sensor, Integral, PP, Titanium Rotor Pin, PVDF Rotor (black), 0.5 to 4 inch
3-8510-P1	198 864 505	Sensor, Integral, PP, Titanium Rotor Pin, PVDF Rotor (black) 5 to 8 inch
3-8510-T0	159 000 622	Sensor, Integral, PVDF (nat.), PVDF (nat.) Rotor Pin, PVDF Rotor (nat.), 0.5 to 4 inch
3-8510-V0	198 864 506	Sensor, Integral, PVDF (nat.), Hastelloy-C Rotor Pin, PVDF Rotor (nat.), 0.5 to 4 inch
3-3519/515-P3	159 000 819	Sensor & Wet-Tap Assy., PP, Titanium Rotor Pin, PVDF Rotor (black), 0.5 to 4 inch
3-3519/515-P4	159 000 820	Sensor & Wet-Tap Assy., PP, Titanium Rotor Pin, PVDF Rotor (black), 5 to 8 inch
3-3519/515-P5	159 000 821	Sensor & Wet-Tap Assy., PP, Titanium Rotor Pin, PVDF Rotor (black), 10 to 36 inch

Replacement Parts 515/8510

M1538-2	198 801 181	Rotor, PVDF Black
P51547-3	159 000 474	Rotor, PVDF Natural
M1538-4	198 820 018	Rotor, ETFE
P51550-3	198 820 043	Rotor and Pin, PVDF Natural
3-0515.322-1	198 820 059	Sleeved Rotor, PVDF Black
3-0515.322-2	198 820 060	Sleeved Rotor, PVDF Natural
3-0515.322-3	198 820 017	Sleeved Rotor, ETFE
P31542	198 801 630	Sensor Cap, Red (for use with 515)

Ordering Information

2536/8512-XX

Mfr. Part No.	Code	Description
3-2536-P0	198 840 143	Sensor, Polypropylene, Titanium Rotor Pin, PVDF Rotor (black), ½ to 4 inch
3-2536-P1	198 840 144	Sensor, Polypropylene, Titanium Rotor Pin, PVDF Rotor (black) 5 to 8 inch
3-2536-P2	198 840 145	Sensor, Polypropylene, Titanium Rotor Pin, PVDF Rotor (black) 10 to 36 inch
3-2536-P3	159 000 758	Sensor, Wet-Tap, Polypropylene, Titanium Rotor Pin, PVDF Rotor (black), ½ to 4 inch
3-2536-P4	159 000 759	Sensor, Wet-Tap, Polypropylene, Titanium Rotor Pin, PVDF Rotor (black) 5 to 8 inch
3-2536-P5	159 000 760	Sensor, Wet-Tap, Polypropylene, Titanium Rotor Pin, PVDF Rotor (black) 10 to 36 inch
3-2536-V0	198 840 146	Sensor, PVDF (natural), Hastelloy-C Rotor Pin, PVDF Rotor (natural), ½ to 4 inch
3-2536-V1	198 840 147	Sensor, PVDF (natural), Hastelloy-C Rotor Pin, PVDF Rotor (natural), 5 to 8 inch
3-2536-T0	198 840 149	Sensor, PVDF (natural), PVDF (nat.) Rotor Pin, PVDF Rotor (natural), ½ to 4 inch
3-8512-P0	198 864 513	Sensor, Integral, PP, Titanium Rotor Pin, PVDF Rotor (black), ½ to 4 inch
3-8512-P1	198 864 514	Sensor, Integral, PP, Titanium Rotor Pin, PVDF Rotor (black) 5 to 8 inch
3-8512-T0	198 864 518	Sensor, Integral, PVDF (nat.), PVDF (nat.) Rotor Pin, PVDF Rotor (nat.), ½ to 4 inch
3-8512-V0	198 864 516	Sensor, Integral, PVDF (nat.), Hastelloy-C Rotor Pin, PVDF Rotor (nat.), ½ to 4 inch
3-3519/2536-P3	159 000 822	Sensor & Wet-Tap Assy., PP, Titanium Rotor Pin, PVDF Rotor (black), ½ to 4 inch
3-3519/2536-P4	159 000 823	Sensor & Wet-Tap Assy., PP, Titanium Rotor Pin, PVDF Rotor (black), 5 to 8 inch
3-3519/2536-P5	159 000 824	Sensor & Wet-Tap Assy., PP, Titanium Rotor Pin, PVDF Rotor (black), 10 to 36 inch

Replacement Parts 2536/8512

3-2536.320-1	198 820 052	Rotor, PVDF Black
3-2536.320-2	159 000 272	Rotor, PVDF Natural
3-2536.320-3	159 000 273	Rotor, ETFE
3-2536.321	198 820 054	Rotor and Pin, PVDF Natural
3-2536.322-1	198 820 056	Sleeved Rotor, PVDF Black
3-2536.322-2	198 820 057	Sleeved Rotor, PVDF Natural
3-2536.322-3	198 820 058	Sleeved Rotor, ETFE
P31542-3	159 000 464	Sensor Cap, Blue (for use with 2536)

Accessories 515/8510 & 2536/8512

M1546-1	198 801 182	Rotor Pin, Titanium
M1546-2	198 801 183	Rotor Pin, Hastelloy-C
M1546-3	198 820 014	Rotor Pin, Tantalum
M1546-4	198 820 015	Rotor Pin, Stainless Steel
P51545	198 820 016	Rotor Pin, Ceramic
1220-0021	198 801 186	O-Ring, FPM
1224-0021	198 820 006	O-Ring, EPDM
1228-0021	198 820 007	O-Ring, FFKM
P31536	198 840 201	Sensor Plug, Polypropylene
P31934	159 000 466	Conduit Cap
P51589	159 000 476	Conduit Adapter Kit
5523-0222	159 000 392	Cable (per foot), 2 conductor with shield, 22 AWG
3-8050	159 000 184	Universal mount kit
3-8050-1	159 000 753	Universal junction box
3-8050.390-1	159 001 702	Retaining Nut Replacement Kit, NPT, Valox®
3-8050.390-3	159 310 116	Retaining Nut Replacement Kit, NPT, PP
3-8050.390-4	159 310 117	Retaining Nut Replacement Kit, NPT, PVDF
3-8051	159 000 187	Transmitter integral adapter (for 8510 and 8512)

+GF+

Georg Fischer Signet LLC, 3401 Aero Jet Avenue, El Monte, CA 91731-2882 U.S.A. • Tel. (626) 571-2770 • Fax (626) 573-2057
For Worldwide Sales and Service, visit our website: www.gfsignet.com • Or call (in the U.S.): (800) 854-4090
For the most up-to-date information, please refer to our website at www.gfsignet.com

3-0515.090 Rev T 06/13 English
© Georg Fischer Signet LLC 2013

Signet 8550 Flow Transmitters

Check out the 9900 Transmitter for your single channel needs

Member of the ProcessPro® Family of Instruments

Panel Mount

Pipe, Wall, Tank and Integral Mount

Signet 8550 Flow Transmitters are advanced instruments that convert the signal from frequency and digital (S^3L) flow sensors into a 4 to 20 mA signal for long distance transmission. Configuration flexibility is maximized with dual input/output, two optional relays for process control, two packaging options for integral/pipe mount or panel installation, and scalability for virtually any flow range or engineering unit. State-of-the-art electronic design ensures long-term reliability, signal stability, and simple user setup and operation.

Features

- **2 or 4 wire power**
- **Available with dual input & output**
- **4 to 20 mA scaleable outputs**
- **Permanent & resettable totalizers**
- **Relay options available**
- **NEMA 4X enclosure with self-healing window**
- **Output simulation for complete system testing**

c UL us LISTED
MEASURING EQUIPMENT
77CJ

Applications

- **Flow Control and Monitoring**
- **Filtration or Softener Regeneration**
- **Effluent Totalization**
- **Pump Protection**
- **Feed Pump Pulsing**
- **Ratio Control**
- **Water Distribution**
- **Leak Detection**

Specifications

General		
Compatibility	Signet Flow Sensors with frequency outputs	
Accuracy	± 0.5% of reading	
Display	Alphanumeric 2 x 16 LCD	
Update Rate	1 second	
Contrast	User selectable, 5 levels	
Materials		
Enclosure	PBT resin	
Keypad	Sealed 4-key silicon rubber	
Panel and Case Gasket	Neoprene	
Window	Polyurethane coated polycarbonate	
Electrical		
Power	12 to 24 VDC ±10%, regulated	
	100 mA max.	
Sensor Input Range	0.5 to 1500 Hz	
Sensor Power	2-wire: 5 VDC ± 1% @ 1.5 mA	
	3 or 4 wire: 5 VDC ± 1% @ 20 mA	
	Optically isolated from current loop short circuit protected	
Current Output	4 to 20 mA, isolated, passive, fully adjustable and reversible	
Max. Loop Impedance	50 Ω max. @ 12 V	
	325 Ω max. @ 18 V	
	600 Ω max. @ 24 V	
Update Rate	100 ms	
Accuracy	±0.03 mA	
Relay Output		
Mechanical SPDT contacts	High, Low, Pulse, Off	
Maximum Voltage Rating	30 VDC @ 5 A , 250 VAC @ 5 A resistive load	
Hysteresis	User selectable	
Maximum 400 pulses/min		
Open-Collector Output		
	High, Low, Pulse, Off	
	Optically isolated, 50 mA max. sink, 30 VDC max. pull-up voltage.	
Hysteresis	User selectable for exiting alarm condition	
Maximum 400 pulses/min.		
Environmental		
Operating Temperature	-10 °C to 70 °C	14 °F to 158 °F
Storage Temperature	-15 °C to 80 °C	5 °F to 176 °F
Relative Humidity	0 to 95%, non-condensing	
Enclosure	NEMA 4X/IP65 (front face only on panel mount); field mount is 100% NEMA 4X/IP65	
Shipping Weight		
	0.325 kg	0.7 lb
Standards and Approvals		
	CE, FCC, UL, CUL	
	RoHS compliant, China RoHS	
	Manufactured under ISO 9001 for Quality and ISO 14001 for Environmental Management and OHSAS 18001 for Occupational Health and Safety	

Dimensions

3-8550-XP

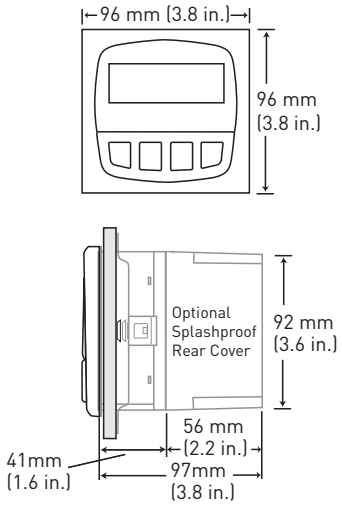

Field version with universal mount

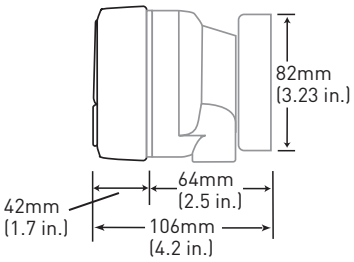

System Overview

Panel Mount	Field Mount - Pipe, Tank, Wall	Integral Mount
Signet 8550 Flow Transmitter (Includes mounting bracket and panel gasket)	**Signet 8550 Flow Transmitter** with 3-8050 Universal Mount Kit	**Signet 8550 Flow Transmitter** with 3-8051-X Integral Mount Kit
Signet Sensor 515 525 2000 2100 2507 2536 2537 2540 2551 2552	Signet Sensor 515 2507 2540 525 2536 2537 2000 2551 2552 2100	Signet Integral Mount Sensor 3-8510-XX 3-8512-XX
Signet Fittings		

All sold separately

Ordering Notes

1) Use the field mount version to directly mount the instrument to the Model 515 or 2536 integral mount sensor. See sensor data sheet for more information.
2) Field mount and sensor can be ordered in a package. See Integral Mount for more information.
3) Panel cutout should be 92 mm X 92 mm (3.62 in X 3.62 in.).
4) An optional splashproof rear cover for the panel mount version can be ordered separately if needed.

Please refer to Wiring, Installation, and Accessories sections for more information.

Ordering Information

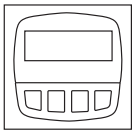

Mfr. Part No.	Code	Input	Output	Power
ProcessPro Flow Transmitter				
Field mount package				
3-8550-3	**159 000 051**	Two	Two 4 to 20 mA outputs and two open collectors for Hi, Lo, Pulse or Frequency	2 or 4 wire
Panel mount package				
3-8550-3P	**159 000 052**	Two	Two 4 to 20 mA outputs and two open collectors for Hi, Lo, Pulse or Frequency	2 or 4 wire

Accessories and Replacement Parts

Mfr. Part No.	Code	Description
Mounting Accessories		
3-8050	**159 000 184**	Universal mounting kit
3-8051	**159 000 187**	Flow Sensor integral mount kit, NPT, Valox
3-8051-1	**159 001 755**	Flow Sensor integral mount kit, NPT, PP
3-8051-2	**159 001 756**	Flow Sensor integral mount kit, NPT, PVDF
3-0000.596	**159 000 641**	Heavy duty wall mount bracket (panel mount only)
3-5000.598	**198 840 225**	Surface mount bracket (panel mount only)
3-8050.395	**159 000 186**	Splashproof rear cover (panel mount only)
3-9900.396	**159 001 701**	Angle adjustment adapter kit
Liquid Tight Connectors and Other		
3-9000.392	**159 000 368**	Liquid tight connector kit for rear cover (includes 3 connectors)
3-9000.392-1	**159 000 839**	Liquid tight connector kit, NPT (1 connector)
3-9000.392-2	**159 000 841**	Liquid tight connector kit, PG 13.5 (1 connector)
3-8050.396	**159 000 617**	RC filter kit (for relay use)

3-8550.099 Rev F (4/13)
© Georg Fischer Signet LLC
3401 Aero Jet Avenue, El Monte, CA 91731-2882 U.S.A. • Tel. (626) 571-2770 • Fax (626) 573-2057 • www.gfsignet.com • e-mail: signet.ps@georgfischer.com
Specifications subject to change without notice. All rights reserved. All corporate names and trademarks stated herein are the property of their respective companies.

Signet 2450 Pressure Sensors

1/2 in. union mount

Blind transmitter or digital (S^3L) sensor

The 2450 Pressure Sensor has a one-piece injection molded PVDF body and ceramic diaphragm for superior compatibility in corrosive liquids. Three pressure versions allow for optimal resolution matched to your sensing needs. Solid state circuitry eliminates drift (no internal potentiometers).

These sensors are available with a proprietary digital (S^3L) output, or field-scaleable 4 to 20 mA output. Dual-threaded ends allow in-line installation with conduit connection, or add the integral adapters to create a compact assembly with a field mount version of the Signet 8250 Level, 8450 Pressure Transmitter or the 9900 Transmitter.

Features

- **Test certificate included**
- **4 to 20 mA or digital (S^3L) output**
- **½ in. male union process connection**
- **One-piece injection molded PVDF body**
- **Flush ceramic diaphragm**
- **Easy installation**
- **Choice of three pressure ranges**
- **Pressure or level measurement**

Applications

- **Level or Depth Sensing**
- **HVAC**
- **Scrubber Systems**
- **Pump Protection**
- **Water Management**
- **Irrigation Systems**
- **Wastewater**
- **Chemical Processing**
- **Pressure Regulation/Monitoring**

Specifications

General			
Output		Digital (S^{3}L) or 4 to 20 mA	
Accuracy			
	For all pressure ranges	±1% of full scale @ 25 °C	
	Response Time	< 100 ms	
	Sensing-End Connection	½ in. union male thread (requires end connector and union nut)	
		(See installation section for end connector and nut recommendation)	
Cable-end connection		¾ in. NPT male thread	
Wetted Materials			
Sensor Housing		PVDF	
Diaphragm		Ceramic	
Diaphragm Seal		FPM	
Electrical			
Power Requirements			
	Digital (S^{3}L)	5 to 6.5 VDC < 1.5 mA	
	4 to 20 mA	12 to 24 VDC ±10%, regulated	
Cable Length		4.6 m	15 ft
Cable Type		3 cond. + shield, 22 AWG, PVC jacketed, Blk/Red/White/Shld	
Digital (S^{3}L) Output		Serial ASCII, TTL level 9600 bps.	
		Reverse polarity and short circuit protected.	
4 to 20 mA Output			
Accuracy		±32 µA	
Resolution		< 5 µA	
Span		4 to 20 mA factory calibrated to operating ranges shown below	
Max. Loop Impedance		100 Ω @ 12 V	
		325 Ω @ 18 V	
		600 Ω @ 24 V	
Max. Temperature/Pressure Rating			
Operating Temperature		-15 °C to 85 °C	5 °F to 185 °F
Storage Temperature		-20 °C to 100 °C	-4 °F to 212 °F
Operating Pressure			
	-XU	0 to 0.7 bar	0 to 10 psig
	-XL	0 to 3.4 bar	0 to 50 psig
	-XH	0 to 17 bar	0 to 250 psig
Vacuum Range			
	-XU	-0.1 to 0.7	-1.5 to 10 psi
	-XL	-0.41 to 3.4 bar	-6 to 50 psi
	-XH	-0.96 to 17.2 bar	-14.6 to 250 psi
Proof Pressure			
	-XU:	1.4 bar	20 psig
	-XL	5.2 bar	75 psig
	-XH	20.7 bar	300 psig
Burst Pressure		82 bar	1,200 psig
Shipping Weight			
		0.150kg	0.33 lb
Standards and Approvals			
		CE, FCC	
		RoHS compliant, China RoHS	
		Manufactured under ISO 9001 for Quality and ISO 14001 for Environmental Management and OHSAS 18001 for Occupational Health and Safety	

See Temperature and Pressure graphs for more information.

Dimensions

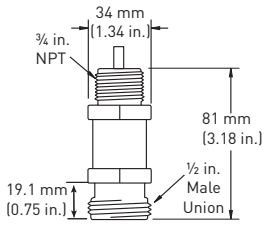

3-2450-3X, -7X

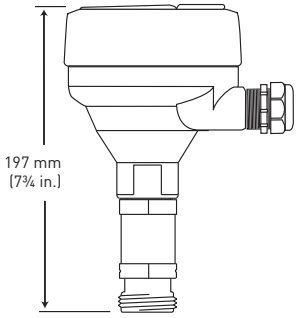

With 3-8450

Pressure Instrument
Sold separately

3-8052
Integral
Mount Kit
Sold separately

3-2450-XX
Pressure
Sensor

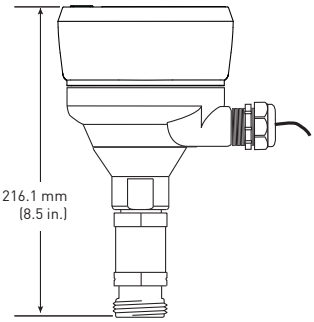

With 3-9900-1

System Overview

Panel Mount	Field Mount - Pipe, Tank, Wall	4 to 20 mA input	Integral Mount
Signet Instruments 8900 8450 9900	Signet Instruments 8450 9900 with 3-8050 Universal Mount Kit	Customer Supplied Chart Recorder or Programmable Logic Controller	Signet Instruments 8450 9900 with 3-8052 Integral Mount Kit

Signet 2450 Pressure Sensor*

All sold separately

In-Line Installation - Fittings customer supplied

Submersible Installation -
Customer supplied
pipe extension or conduit
with 3/4 in. FNPT threads
and pipe assembly**

* An alternative to the Signet 2450 submersible is to use the Signet 2250 Hydrostatic Pressure Sensor.
**Cable must be exposed to the atmosphere. Refer to the Signet Submersion brochure located in the K-Factors Fittings and More Kit (3-0000-709) for installation suggestions and options.

Application Tips

- These sensors can also be used for tank level measurements.
- Place a ball valve between tank and 2450 sensor for maintenance ease.
- Back end of sensor must be exposed to atmospheric pressure.
- To extend the cable, use a 3-conductor shielded cable & junction box.
- For submersible sensor mounting, always use the 3-2250 Submersible Hydrostatic Pressure Sensor.

Operating Temperature/Pressure Graphs

Note:
The pressure/temperature graphs are specifically for the Signet sensor. During system design the specifications of all components must be considered. In the case of a metal piping system, a plastic sensor will reduce the system specification. When using a PVDF sensor in a PVC piping system, the fitting will reduce the system specification.

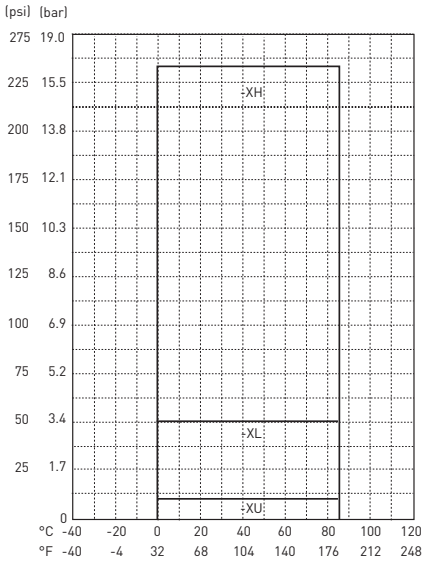

Ordering Notes

Any sensor can be mounted with an instrument in an integral configuration by doing the following:

1. Order Integral adapter kit PN 3-8052 or 3-8052-1 (sold separately) to connect the instrument (sold separately) directly on to the sensor.
2. Order an instrument (sold separately). The following instrument part numbers are compatible with the 2450 for integral mounting: 3-8450-3, 3-9900-1.
3. Union mount version installs into pipe w/end connector and union nut. See Installation and Wiring section for more information on parts required.

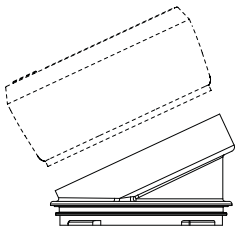

3-9900-396
Angle adjustment adapter kit (optional accessory)

Ordering Information

Mfr. Part No.	Code	Output	Process Connection
Pressure Sensor with 4.6 m (15 ft) cable			
Operating Pressure Range 0 to 10 psi			
3-2450-3U	**159 000 683**	Digital (S^3L)	½ in. male union
3-2450-7U	**159 000 906**	Current (4 to 20 mA)	½ in. male union
Operating Pressure Range 0 to 50 psi			
3-2450-3L	**159 000 682**	Digital (S^3L)	½ in. male union
3-2450-7L	**159 000 908**	Current (4 to 20 mA)	½ in. male union
Operating Pressure Range 0 to 250 psi			
3-2450-3H	**159 000 681**	Digital (S^3L)	½ in. male union
3-2450-7H	**159 000 910**	Current (4 to 20 mA)	½ in. male union

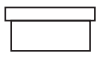

Material	Code	Description
Union Matrix for Pressure Sensor 3-2450 ½ in. Union Connection		
End connector		
PVC	**721 600 106**	Union end metric socket
PVC	**721 602 006**	Union end IPS socket
PVC	**721 602 656**	Union end NPT thread
PP-B	**727 608 506**	Union end butt
PP-B	**727 600 106**	Union end threaded NPT
PP-B	**198 203 603**	Union end threaded NPT
PP-N	**728 608 506**	Union end butt
PVDF	**735 608 606**	Union end butt
PVDF	**735 600 106**	Union end socket
PVDF	**198 203 611**	Union end threaded
Nuts		
PVC	**721 690 006**	
PVDF	**735 690 406**	
PP	**727 690 406**	

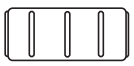

Accessories and Replacement Parts

Mfr. Part No.	Code	Description
5523-0322	**159 000 761**	Sensor cable (per ft), 3 cond. plus shield, 22 AWG
3-8052	**159 000 188**	¾ in. Integral mounting kit
3-8052-1	**159 000 755**	¾ in. NPT mount junction box with one liquid tight connector and cap with junction terminals
3-9000.392-1	**159 000 839**	Liquid tight connector kit, NPT (1 connector)
3-9000.392-2	**159 000 841**	Liquid tight connector kit, PG 13.5 (1 connector)
3-9900.396	**159 001 701**	Angle Adjustment Adapter Kit (for Field Mounting)
3-0250	**159 001 538**	USB to digital (S^3L) configuration/diagnostic tool

3-2450.099 Rev K (4/13)
© Georg Fischer Signet LLC
3401 Aero Jet Avenue, El Monte, CA 91731-2882 U.S.A. • Tel. (626) 571-2770 • Fax (626) 573-2057 • www.gfsignet.com • e-mail: signet.ps@georgfischer.com
Specifications subject to change without notice. All rights reserved. All corporate names and trademarks stated herein are the property of their respective companies.

Signet 8450-3 Pressure Transmitter

English

3-8450.090-3 Rev. J 01/13 English

CAUTION!

- Remove power to unit before wiring input and output connections.
- Follow instructions carefully to avoid personal injury.

Contents

1. Installation
2. Specifications
3. Electrical Connections
4. Menu Functions

1. Installation

ProcessPro transmitters are available in two styles: panel mount and field mount. The panel mount is supplied with the necessary hardware to install the transmitter. This manual includes complete panel mounting instructions.
Field mounting requires one of two separate mounting kits. The 3-8052 integral kit joins the sensor and instrument together into a single package. The 3-8050 Universal kit enables the transmitter to be installed virtually anywhere.
Detailed instructions for integral mounting or other field installation options are included with the 3-8052 Integral kit or the 3-8050 Universal kit.

1.1 Panel Installation

1. The panel mount transmitter is designed for installation using a ¼ DIN Punch. For manual panel cutout, an adhesive template is provided as an installation guide. Recommended clearance on all sides between instruments is 1 inch.
2. Place gasket on instrument, and install in panel.
3. Slide mounting bracket over back of instrument until quick-clips snap into latches on side of instrument.
4. To remove, secure instrument temporarily with tape from front or grip from rear of instrument. DO NOT RELEASE.

Press quick-clips outward and remove.

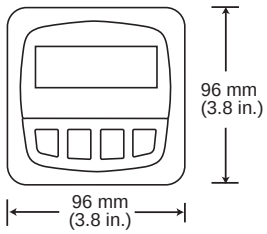

FRONT VIEW
Field Mount &
Panel Mount

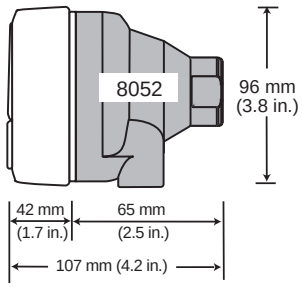

SIDE VIEW
Field Mount

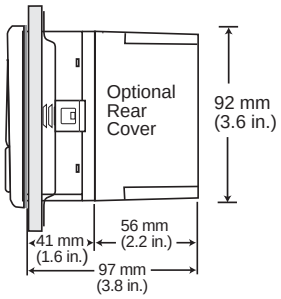

SIDE VIEW
Panel Mount

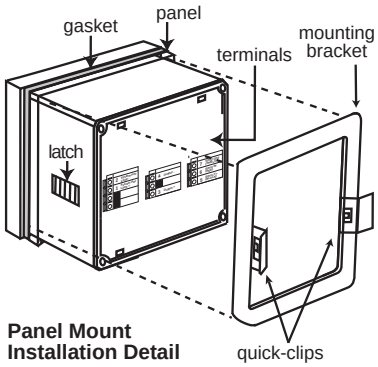

Panel Mount Installation Detail

2. Specifications

General

Compatibility: Signet 2450 Pressure Sensor
Accuracy: ±1% of full scale
Enclosure:

- Case: PBT
- Panel case gasket: Neoprene
- Window: Polyurethane coated polycarbonate
- Keypad: Sealed 4-key silicone rubber
- Weight: Approx. 325 g (12 oz.)

Display:

- Alphanumeric 2 x 16 LCD
- Update rate: 1 second
- Contrast: User selected, 5 levels

Electrical

Power: 12 to 24 VDC ±10%, regulated, 60 mA max current

Sensor Input:

- Range: 0-250 psig, 0-17 bar, 0-1700 kPa

Current output:

- 4 to 20 mA, isolated, fully adjustable and reversible
- Max loop impedance: 50 Ω max. @ 12 V, 325 Ω max. @ 18 V, 600 Ω max. @ 24 V
- Update rate: 100 ms
- Accuracy: ±0.03 mA

Open-collector output: Hi, Lo, Off, Programmable:

- Optically isolated, 50 mA max. sink, 30 VDC max. pull-up voltage
- Hysteresis: User adjustable

Environmental

- Operating temperature: -10 °C to 70 °C (14 °F to 158 °F)
- Storage temperature: -15 °C to 80 °C (5 °F to 176 °F)
- Relative humidity: 0 to 95%, non-condensing
- Maximum altitude: 2000 m (6562 ft)
- Insulation category: II
- Rating: NEMA 4X/IP65 front

Standards and Approvals

- CE, UL listed
- Immunity: EN50082-2
- Emissions: EN55011 Class B
- Manufactured under ISO 9001 for Quality, ISO 14001 for Environmental Management and OHSAS 18001 for Occupational Health and Safety.

FC Declaration of Conformity according to FCC Part 15
This device complies with Part 15 of the FCC rules. Operation is subject to the following two conditions:
(1) This device may not cause harmful interference, and,
(2) This device must accept any interference received, including interference that may cause undesired operation.

China RoHS (Go to www.gfsignet.com for details)

3. Electrical Connections

Caution: Failure to fully open terminal jaws before removing wire may permanently damage instrument.

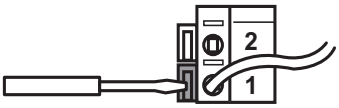

Wiring Procedure

1. Remove 13 mm - 16 mm (0.5 in. - 0.625 in.) of insulation from wire end.
2. Press the orange terminal lever downward with a small screwdriver to open terminal jaws.
3. Insert exposed (non-insulated) wire end in terminal hole until it bottoms out.
4. Release orange terminal lever to secure wire in place. Gently pull on each wire to ensure a good connection.

Wiring Removal Procedure

1. Press the orange terminal lever downward with a small screwdriver to open terminal jaws.
2. When fully open, remove wire from terminal.

Wiring Tips:

- Do not route sensor cable in conduit containing AC power wiring. Electrical noise may interfere with sensor signal.
- Routing sensor cable in grounded metal conduit will help prevent electrical noise and mechanical damage.
- Seal cable entry points to prevent moisture damage.
- Only one wire should be inserted into a terminal. Splice double wires outside the terminal.
- If your system uses a single sensor, it must be located within 122 m (400 ft.) of the transmitter.
- If your system uses two sensors, the total length of cable connected to the transmitter is limited to 122 m (400 ft.)
- The 3 conductors from a dual-sensor system can be tied together and then a single set of wires continued on to the transmitter.
- For best performance, ground the sensor SHIELD wire to a local earth ground at a point near the sensor. (Experiment with connecting the sensor shield wire to different local ground points to identify best signal quality.)

Terminals 3-4: Primary Loop Power
12-24 VDC ±10% system power and current loop connections.
SINGLE SENSOR system MUST use terminals 3-4.
Terminals 5-6: 12-24 VDC ± 10%
Power and current loop connections for second sensor.

- Maximum loop impedance:
  50Ω max. at 12 V
  325Ω max. at 18 V
  600Ω max. at 24V

Terminals 11-16: Dual digital sensor inputs
See next page for more information.

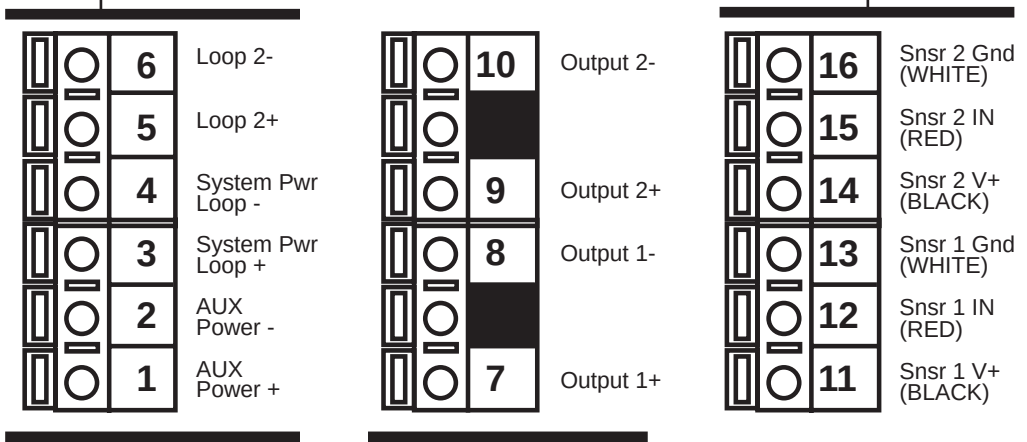

Terminals 1-2: Auxiliary power is used only if two sensors are connected to the transmitter.

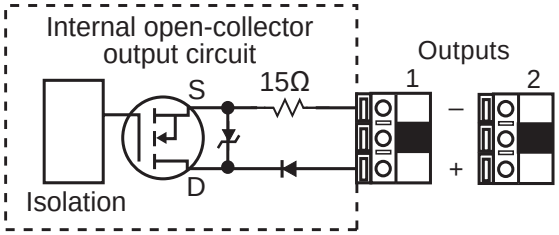

Terminals 7-10: Open-Collector Outputs

- Two transistor outputs programmable as High or Low alarm with adjustable hysteresis
- Outputs can be disabled (Off) if not used

3.1 Sensor Input Connections

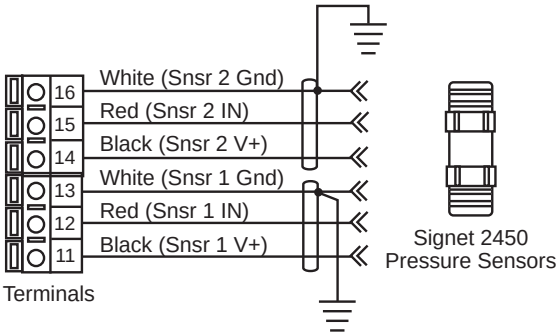

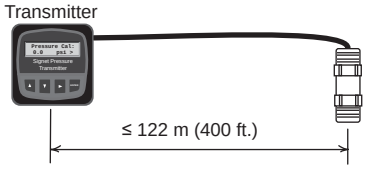

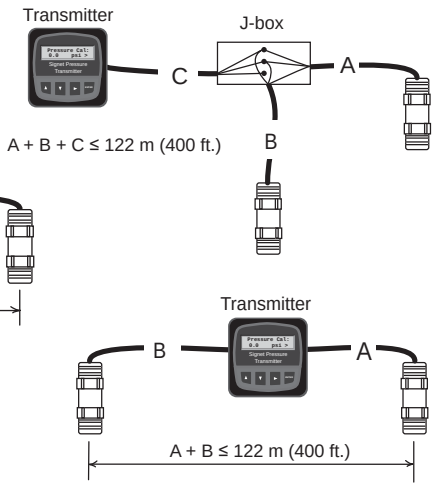

3.2 System Power/Loop Connections

Stand-alone application, no current loop used

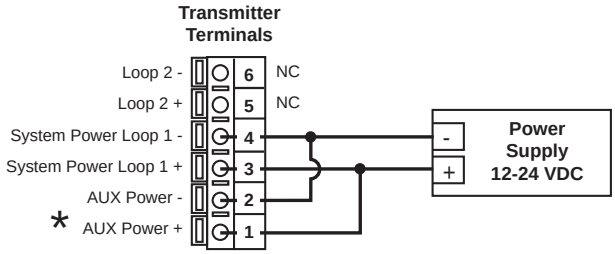

* AUX power required only where two sensors are used

Connection to a PLC/Recorder, separate supply

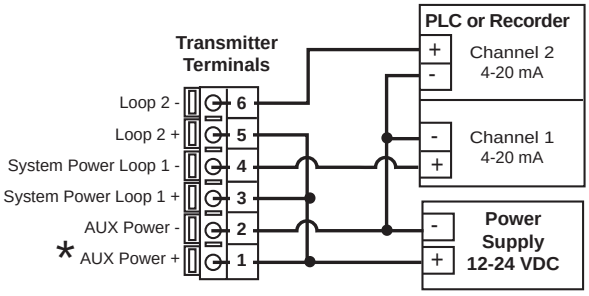

* AUX power required only where two sensors are used

Connection to a PLC with built-in power supply

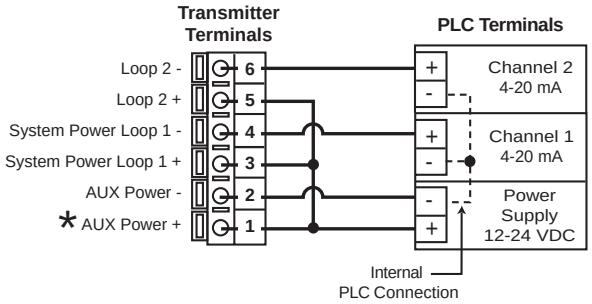

* AUX power required only where two sensors are used

Example: Two transmitters connected to PLC/Recorder with separate power supply

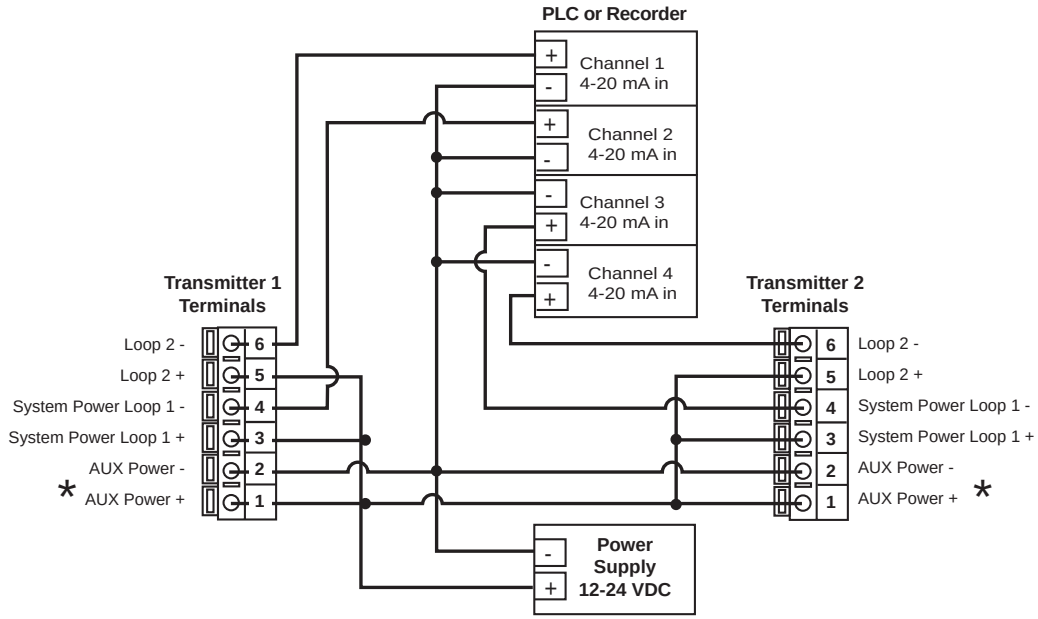

*AUX power required only where two sensors are used

3.3 Open Collector Output

The Open Collector output can be used as a switch that responds when the process variable moves above or below a setpoint.

- **Low:**

Output triggers when process variable is less than the setpoint. The output will relax when the process variable moves above the setpoint plus the hysteresis value.

- **High:**

Output triggers when process variable is greater than the setpoint. The output will relax when the process variable moves below the setpoint plus the hysteresis value.

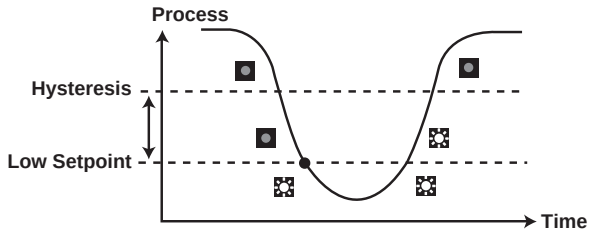

Output energized

Output de-energized

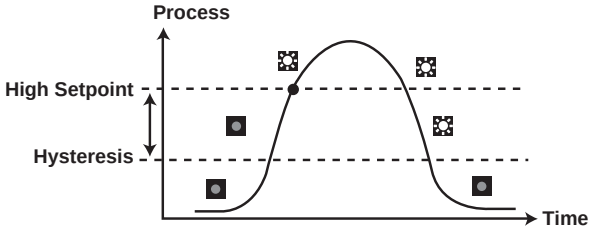

Delta Pressure (Differential Mode)

If two sensors are connected to the transmitter, the DELTA (Sensor 1 - Sensor 2) can be assigned to output. To enable differential mode, the selected output's "Source" selection must be set to "DP".

For pressure and temperature transmitters ensure Sensor 1 is equal to ID 1:
Sensor 1 - Sensor 2
Difference = 60

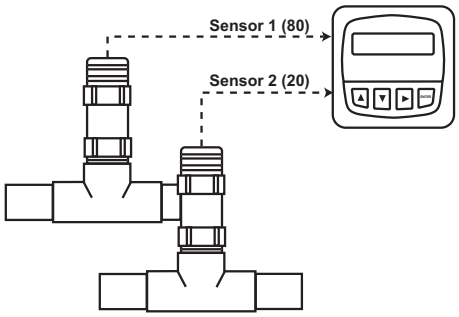

Example: 4-20 mA
Loop1 Source: DP
Loop1 Range: 0-120
Loop1: = 12.00 mA

Example: Output
Output1 Source: DP
Output1 Mode: Low
Output1 Setpoint: 70
Output1 = ON

VIEW menu

- During normal operation, the ProcessPro displays the VIEW menu.
- When using the CALIBRATE or OPTIONS menus, the ProcessPro will return to the VIEW menu if no activity occurs for 10 minutes.
- To select the item you want displayed, press the UP or DOWN arrow keys. The items will scroll in a continuous loop.
- Changing the display selection does not interrupt system operations.
- No keycode is necessary to change display selection.
- Output settings cannot be edited from the VIEW menu.

View Menu

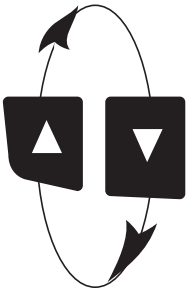

Display	Description
Press1: 7.89 psi Press2: 4.56 psi	Monitor Pressure 1 and Pressure 2 simultaneously. This is the permanent view display.
Delta Pressure: 3.33 psi	Monitor the delta pressure (Channel 1 rate - channel 2 rate = Delta Pressure) This is a permanent display.

The displays below are temporary. After 10 minutes the display returns to the permanent display.

Loop 1 Output: 12.00 mA	Monitor the 4 to 20 mA output for Loop 1 and 2.
Loop 2 Output: 7.65 mA	
Last CAL: 02-10-09	Monitor date for scheduled maintenance or date of last calibration. (See description in Calibrate Menu.)

ProcessPro Editing Procedure:

Step 1. Press and hold ENTER key:
- 2 seconds to select the CALIBRATE menu
- 5 seconds to select the OPTIONS menu.

Step 2. The Key Code is UP-UP-UP-DOWN keys in sequence.
- After entering the Key Code, the display will show the first item in the selected menu.

Step 3. Scroll menu with UP or DOWN arrow keys.

Step 4. Press RIGHT ARROW key to select menu item to be edited.
- The first display element will begin flashing.

Step 5. Press UP or DOWN keys to edit the flashing element.
- RIGHT ARROW key advances the flashing element.

Step 6. Press ENTER key to save the new setting and return to Step 3.

Notes on Step 1:
- The View Menu is normally displayed.
- The CALIBRATE and OPTIONS menus require a KEY CODE.

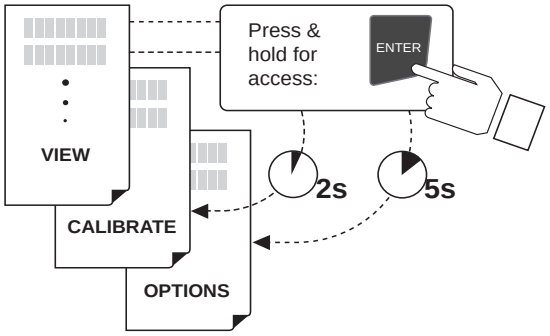

Notes on Step 2:
If no key is pressed for 5 minutes while display is showing "Enter Key Code", the display will return to the VIEW menu.

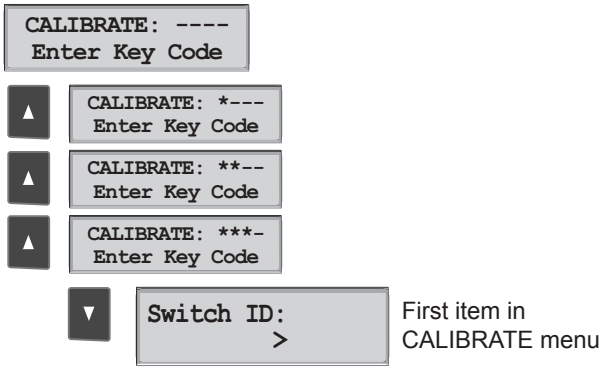

Notes on Steps 3 and 4:
- Refer to pages 6 and 7 for complete listing of menu items and their use.
- From the Step 3 display, pressing the UP and DOWN keys simultaneously will return the display to the VIEW menu.
- If no key is pressed for 10 minutes, display will also return to the VIEW menu.

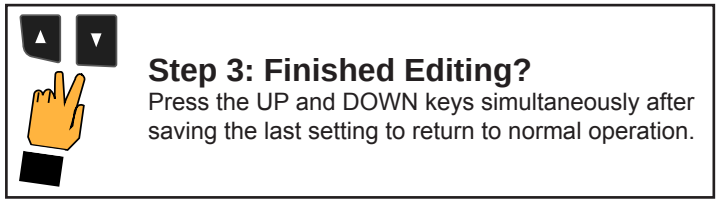

Step 3: Finished Editing?
Press the UP and DOWN keys simultaneously after saving the last setting to return to normal operation.

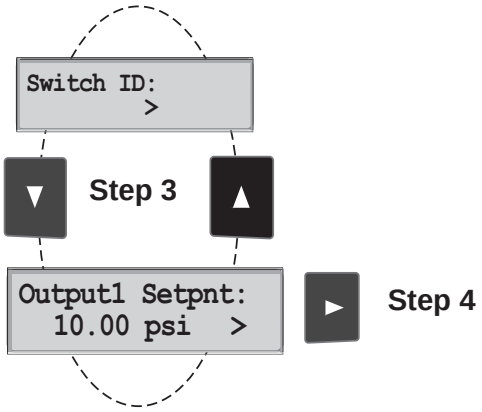

Notes on Steps 5 and 6:
- All output functions remain active during editing.
- Only the flashing element can be edited.
- RIGHT ARROW key advances the flashing element in a continuous loop.
- Edited value is effective immediately after pressing ENTER key.
- If no key is pressed for 10 minutes unit will restore the last saved value and return to step 3.
- Step 6 (pressing ENTER key) always returns you to Step 3.
- Repeat steps 3-6 until all editing is completed.

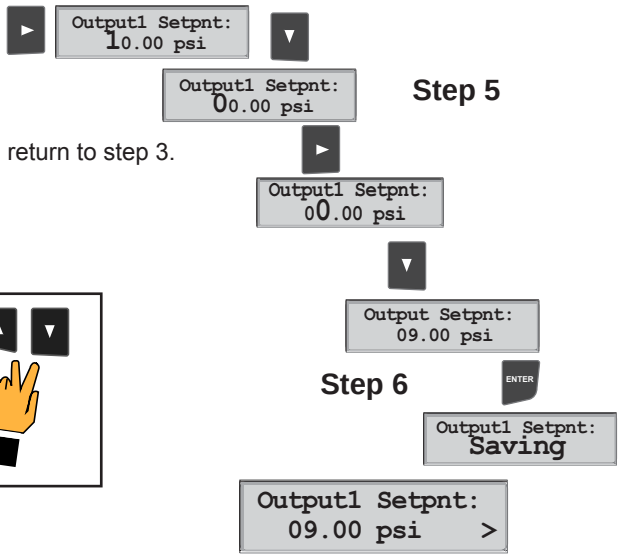

Calibrate Menu

Display (Factory settings shown)	Description
Switch ID PSI	Reverses the identification of Sensor inputs: Pressure 1 becomes identified as Pressure 2, Pressure 2 becomes identified as Pressure1. Use this function to make corrections if the sensors are in the wrong order for a DELTA PRESSURE measurement.
Pressure Units: psi >	Select Pressure units for both input channels: psi, bar or kPa.
Set: Pressure1	Provides a maximum 5 psi offset to match 8450 to external reference. Enter "-999" to restore the original Factory calibration value. Changes to this setting will become effective when the display exits the Calibrate menu.
Set: Pressure2	
Loop 1 Source Pressure1	Select the INPUT SIGNAL represented by this 4-20 mA output: Pressure 1, Pressure 2, or Delta Pressure (Pressure1 - Pressure2.)
Loop 1 Range: psi 0.0 → 100.0 >	Check the 2450 Sensor instructions for the range capability of your sensor. Be sure to modify this setting if you change the Pressure Units.
Output 1 Source Pressure1	Select the INPUT SIGNAL represented by this Open Collector Output: Pressure 1, Pressure 2, or the Delta Pressure (Pressure1 - Pressure2.)
Output1 Mode: Low >	Select the desired mode of operation for the Open Collector output. Options available are High or Low. The signal may be disabled (Off) if not used.
Output1 Setpnt: 10.0 psi >	In Low or High Mode, the Open Collector output #1 will be activated when the pressure reaches this value. Be sure to modify this setting if you change the Pressure Units.
Output1 Hys: 5 >	The Open Collector output will be de-energized at Setpoint ± Hysteresis, depending on High or Low Setpoint selection.
Last CAL: 2-10-09	Use this "note pad" to record important dates, such as annual recertification or scheduled maintenance.

Menu items will repeat for Loop 2 and Output 2.

Options Menu

Display (Factory settings shown)	Description
Contrast: 3 >	Adjust the LCD contrast for best viewing. A setting of 1 is lowest contrast, 5 is highest. Select lower contrast if the display is in warmer ambient surroundings.
Decimal *****. >	Set the decimal to the best resolution for your application. The display will automatically scale up to this resolution. Select *****., ****.*, ***.**, **.*** or *.****
Averaging Off >	OFF provides the quickest output response to changes in flow. Longer averaging period produces more stable display and output response. Select LOW, HIGH or OFF.
Output1 Active Low >	Active HIGH: This setting is used to turn a device (pump, valve) ON at the setpoint. Active LOW: This setting is used to turn a device OFF at the setpoint.
Output2 Active Low >	
Loop1 Adjust 4.00 mA >	Adjust the minimum and maximum current output. Use this setting to match the system output to any external device. The display value represents the precise current output. Adjustment limits: • 3.80 mA < 4.00 mA > 5.00 mA • 19.00 mA < 20.00 mA > 21.00 mA
Loop1 Adjust 20.00 mA >	
Test Loop 1: >	Press UP or DOWN keys to manually order any output current value from 3.6 mA to 21.00 mA to test current loop output.
Test Loop 2: >	
Test Output 1: >	Press UP or DOWN keys to manually toggle the state of open collector output.
Test Output 2: >	

Menu items will repeat for Loop 2 and Output 2.

Troubleshooting

Display Condition	Possible Causes	Suggested Solutions
`Check Sensor?`	• Sensor not wired properly. • Sensor connected to 8450 while power is on. • Defective sensor.	• Correct sensor wiring. • Recycle power with all sensors connected. • Replace defective sensor.
`Too much error CHECK SENSOR`	The value entered in Set Pressure field is greater than 5 psi deviation from sensor input. (The 8450 allows a maximum of 5 psi calibration offset.).	• Confirm calibration values. • Remove sensor from installation, check 8450 reading (should be zero). If necessary, Set Pressure to zero, reinstall sensor, then recalibrate.
`Reset to Factory Calibration`	Value in SET PRESSURE field is -999.	Entering "-999" in this field will remove all user calibration input and restore the factory values.
`Relay is always activated`	• Hysteresis value too large • Defective transmitter	• Change the hysteresis value • Replace transmitter
`SETUP READ ERROR Press Any Key`	Memory fault occurred.	• Press any key to reload factory presets. • Reprogram all setpoints. • If this message appears again, replace the 8450.

Ordering Information

Mfr. Part No.	Code	Description
3-8450-1	159 000 041	Pressure transmitter, Field mount
3-8450-1P	159 000 042	Pressure transmitter, Panel mount
3-8450-2	159 000 043	Pressure transmitter, Field mount with relays
3-8450-2P	159 000 044	Pressure transmitter, Panel mount with relays
3-8450-3	159 000 045	Pressure transmitter, Field mount with dual input/output
3-8450-3P	159 000 046	Pressure transmitter, Panel mount with dual input/output

Accessories

Mfr. Part No.	Code	Description
3-8050	159 000 184	Universal mounting kit
3-8052	159 000 188	3/4 in. Integral mounting kit
3-8052-1	159 000 755	3/4 in. NPT mount junction box
3-8050.395	159 000 186	Splashproof rear cover
3-8050.396	159 000 617	RC Filter kit (for relay use)
3-0000.596	159 000 641	Heavy duty wall mount bracket
3-5000.598	198 840 225	Surface Mount Bracket
3-9000.392	159 000 368	Liquid tight connector kit for rear cover (includes 3 connectors)
3-9000.392-1	159 000 839	Liquid tight connector kit, NPT (1 piece)
3-9000.392-2	159 000 841	Liquid tight connector kit, PG13.5 (1 piece)

+GF+

Georg Fischer Signet LLC, 3401 Aero Jet Avenue, El Monte, CA 91731-2882 U.S.A. • Tel. (626) 571-2770 • Fax (626) 573-2057
For Worldwide Sales and Service, visit our website: www.gfsignet.com • or call (in the U.S.): (800) 854-4090
For the most up-to-date information, please refer to our website at www.gfsignet.com

3-8450.090-3 Rev. J 01/13 English
© George Fischer Signet, Inc. 2013

Signet 2450 Pressure Sensor

English

3-2450.090-1 Rev. K 05/13 English

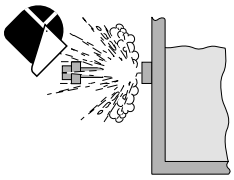

Safety Instructions

1. Prior to installation or removal:
   - Depressurize and vent system
   - Drain below sensor level
2. Confirm chemical compatibility before use.
3. Do not exceed maximum temperature/pressure specifications.
4. Wear safety goggles or faceshield during installation/service.
5. Do not alter product construction.
6. Dispose of properly; DO NOT INCINERATE!

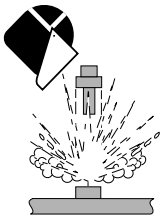

Table of Contents

1. Description
2. Specifications
3. Installation
4. Digital (S³L) Wiring
5. 4 to 20 mA Wiring
6. 4 to 20 mA Span Adjustment
7. Ordering Information

USE THE ATTACHED ADHESIVE LABEL TO PRESERVE THE SAFETY INSTRUCTIONS!

1. Description

The 2450 Pressure Sensor has a one-piece injection molded PVDF body and ceramic diaphragm for superior compatibility in corrosive liquids. These sensors are available with Digital (S³L) digital output or field-scaleable 4 to 20 mA output. Select from three (3) pressure ranges for optimal measurement resolution. Built-in temperature compensation provides outstanding accuracy over a wide operating range. Versions with ½ in. union process connection are best suited for in-line installations.
Integral adapters (sold separately) may be used to create a compact assembly with field mount versions of the 8450 Pressure Transmitter and the 9900 Transmitter.

2. Specifications

General

Compatibility
- Digital (S³L) models: 8450, 8900, 9900
- 4 to 20 mA models: PLC

Wetted materials:
- Sensor housing: PVDF
- Diaphragm: Ceramic
- Seal: FPM

Process connection:
- -3X, -7X: ½ in. Union male thread, where X = U, L, or H

Rear connection: ¾ in. NPT male thread
Cable type: 3 cond + shield, 22 AWG
Standard cable length:
- -3X, -7X: 4.6 m (15 ft)

Sensor Accuracy: ±1% of full scale @ 25 °C
Thermal sensitivity shift: ±0.03% of full scale per °C
Shipping weight: 0.3 kg (0.65 lb.)

Electrical

Power Requirements:
- Digital (S³L) models: 5 to 6.5 VDC ±10%, <1.5 mA
- 4 to 20 mA models: 12 to 24 VDC ±10% regulated

Short circuit & reverse polarity protected

Digital (S³L) output:
- Type: Serial ASCII, TTL level 9600 bps
- Accuracy: ±1% of full scale @ 25 °C
- Repeatability: ±0.5% of full scale
- Resolution: 0.01 psi (0.001 psi for -XU)
- Update rate: <100 ms

4 to 20 mA output:
- Accuracy: ±32 µA
- Repeatability: ±0.5% of full scale
- Resolution: <5 µA
- Span: Field-scaleable (see section 6.3 for factory settings)
- Max loop impedance: 100 Ω @ 12 V, 325 Ω @ 18 V, 600 Ω @ 24 V
- Update rate: <100 ms
- Operating range (Max. pressure for accuracy specifications):
  - -XU 0 to 0.7 bar (0 to 10 psig)
  - -XL 0 to 3.4 bar (0 to 50 psig)
  - -XH 0 to 17.2 bar (0 to 250 psig)
- Vacuum range:
  - -XU -0.1 to 0.7 bar (-1.5 to 10 psi)
  - -XL -0.41 to 3.4 bar (-6 to 50 psi)
  - -XH -0.96 to 17.2 bar (-14.6 to 250 psi)
- Proof pressure (Max. pressure without damage):
  - -XU 1.4 bar (20 psig)
  - -XL 5.2 bar (75 psig)
  - -XH 20.7 bar (300 psig)

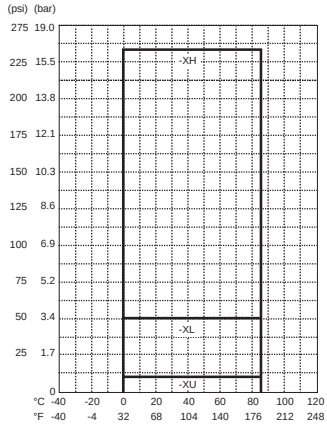

Environmental

- Relative humidity: 0 to 95% (Non-condensing)
- Storage temperature: -20 °C to 100 °C (-4 °F to 212 °F)
- Operating temperature: -15 °C to 85 °C (5 °F to 185 °F)

Standards and Approvals

- CE
- RoHS Compliant
- Manufactured under ISO 9001 for Quality, ISO 14001 for Environmental Management and OHSAS 18001 for Occupational Health and Safety.

FC Declaration of Conformity according to FCC Part 15:
This device complies with Part 15 of the FCC rules.
Operation is subject to the following two conditions:
(1) This device may not cause harmful interference, and,
(2) This device must accept any interference received, including interference that may cause undesired operation.

China RoHS (Go to www.gfsignet.com for details)

Dimensions

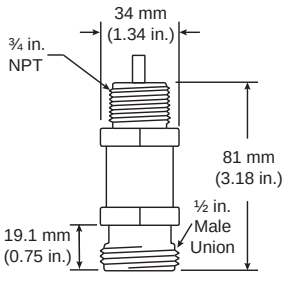

3-2450-3X, -7X

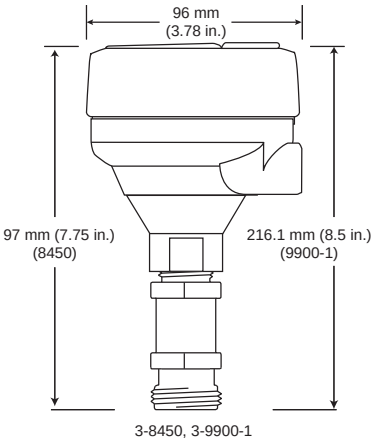

3-8450, 3-9900-1

3. Installation

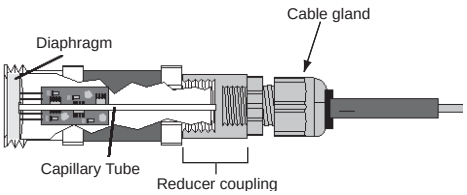

- Signet 2450 Pressure Sensors are gauge pressure sensors. Gauge pressure sensors measure the difference in pressure between the process on one side of a diaphragm and the atmospheric pressure on the opposite side of the diaphragm. A tiny capillary tube inside the sensor body is used to ensure that the back of the diaphragm remains at atmospheric pressure. If moisture is allowed to propagate down this tube to the rear of the diaphragm, the sensor may be damaged.

Important Installation Recommendations

- The ceramic diaphragm is subject to breakage by over-pressure conditions or mechanical contact. HANDLE WITH CARE. Do not attempt to test the sensor by pressing on the diaphragm.
- Short duration pressure pulses or shocks, called "water hammer," are generated by a rapid change in flow rate caused by the operation of system components such as compressors, pumps, pistons and valves. Water hammer can reach pressure levels far exceeding the over pressure rating of our pressure sensors and damage the ceramic diaphragm.
- A pressure snubber is a device for slowing the rate of change of system flow. Installation of a properly sized snubber at or near the input of a pressure sensor will protect it from water hammer damage. Snubbers are available through plumbing and instrumentation dealers.
- When threading the sensor into a piping system, any backpressure can damage the ceramic diaphragm. Open nearby valves to relieve any backpressure while threading the sensor into the pipe.
- If the nearby valves cannot be open while threading the sensor into the pipe, a bleed valve can be installed to avoid overpressure.
- Make sure there are no air bubbles in the pipe, particularly if a long and flexible hose is used to tap into the process pipe. Air bubbles could cause reading fluctuation and errors.

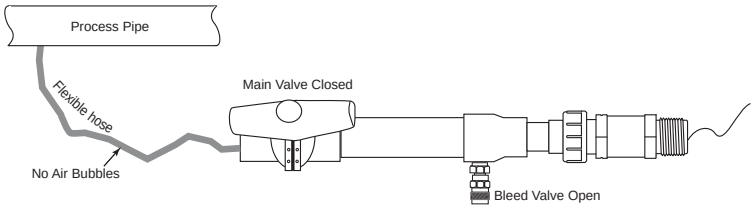

3.1 Integral Assembly Sensor Modification

- Modify sensor part number 3-2450 per figure 1.
- Apply sealant or PTFE tape to the process connection threads per figure 2, after inspecting threads to ensure integrity. Do not install a sensor with damaged threads.
- Thread the sensor into the 3-8052 mounting kit.
- Tighten the sensor 1½ turns past finger tight into the process connection.
- Install 8450 transmitter (refer to 8450 manual for wiring info) or 9900 Transmitter with Angle Adjustment Adapter (refer to 9900 manual for information).
- The 3-8052 Integral kit includes:
  - 3-9000.392-1 liquid tight connector, ½ in. NPT
  - Conduit base to attach 8450.

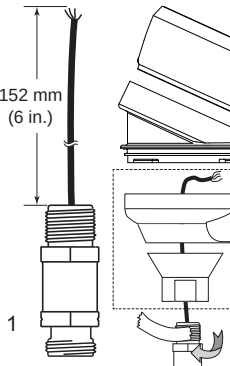

Figure 1

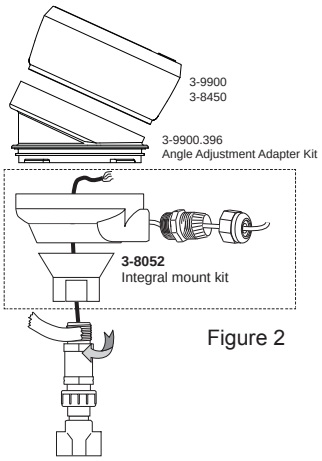

Figure 2

3.2 In-line Remote Assembly

The optional 3-8052-1 Integral Junction box with ¾ in. process connection offers a convenient terminal point to extend the 2450 cable over a distance greater than 4.6 m (15 ft).

- The kit includes:
  - Conduit base and cap with junction terminals
  - 3-9000.392-1 liquid tight connector, ½ in. NPT

To extend the wires longer than 4.6 m (15 ft):

- Modify sensor 3-2450 as described in figure 1.
- Terminate the three wires to the terminal board located in the cap assembly.
- Add customer supplied wire to extend the cable.
- Terminate to the transmitter or the 4 to 20 mA input device.
  - Apply sealant or PTFE tape to the process connection threads per figure 3, after inspecting threads to ensure integrity. Do not install a sensor with damaged threads.
  - Tighten the sensor 1½ turns past finger tight into the process connection.

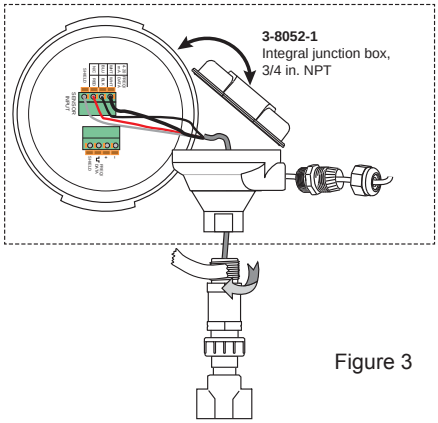

Figure 3

3.3 Tank Installation Options

Submersible:

- Refer to the GF product 3-2250-XX for submersible installations.

Side Tank Mount:

- Install GF ball valve to allow isolation of the sensor for maintenance.
- It is recommended that a 3-8052-1 kit be used to protect the back end of the sensor.

WARNING: Exposing the sensor body to elevated temperatures that are different than the tank fluid temperatures will cause inaccurate reading.

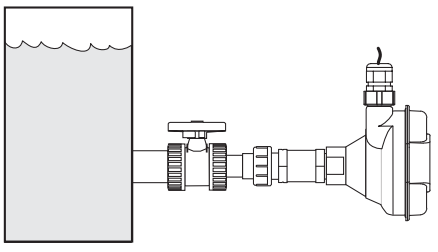

3.4 1/2 Inch Male Union Installation

The 2450-3X and the 2450-7X sensors have a union-style process connection. To assemble:

1. Slide union nut onto pipe or flexible tubing.
2. Install end connectors.
3. Hand-tighten union nut to secure.

Refer to Signet Measurement and Instrumentation Product Catalogue for ordering information.

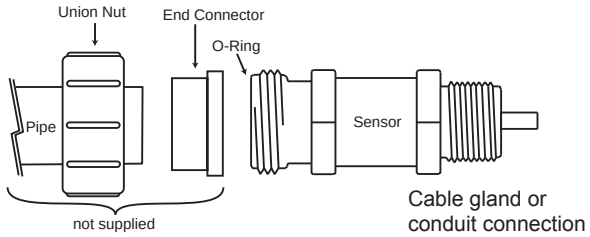

4. Digital (S^3L) wiring

- All models of the 2450 provide Digital (S^3L) output when powered with 5 VDC.
- Connecting the SHIELD to a direct earth ground may reduce electrical noise interference.
- The maximum Digital (S^3L) cable length is dependent upon the instrument to which the sensor is connected.
  Consult the instrument manual for wiring details.

- Connect the 2450 cable directly to Digital (S^3L) I/O terminals.

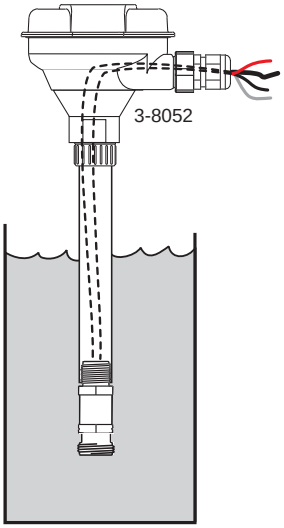

3-9900
S^3L connector

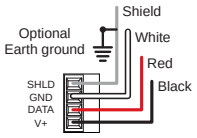

3-8900
I/O Module Connector

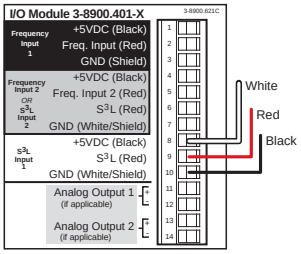

3-8450
S^3L connector

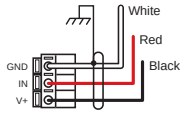

- When the 2450 includes a junction box, connect the 2450 terminals to any Digital (S^3L) I/O port as shown.

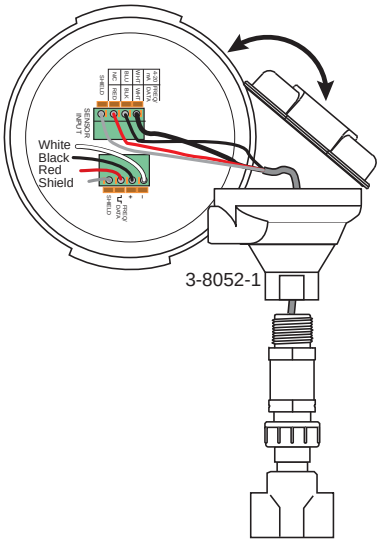

5. 4 to 20 mA Loop Wiring

- The 2450-7X models provide a 4 to 20 mA loop output when powered with 24 VDC.
- Connecting the SHIELD to a direct Earth ground may reduce electrical noise interference.
- Red wire is not used, do not remove the heat shrink. See Section 6, 4 to 20 mA span adjustment.

5.1 Current Loop With No Junction Box

- Connect the 2450 cable directly to a loop device as shown.

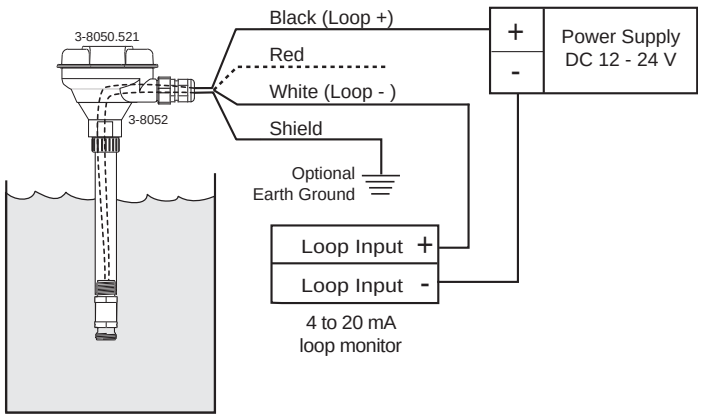

5.2 Current Loop With Junction Box

- When the 2450 includes a junction box, connect the 2450 terminals to the loop device as shown.

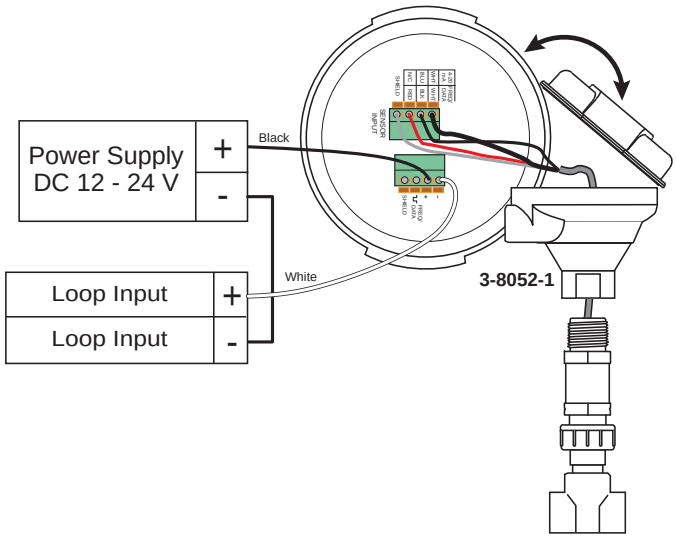

6. 4 to 20 mA Span Adjustment

The 4 to 20 mA endpoint values are independent of one another and may be adjusted in the field. For example, to reduce the 20 mA endpoint value from the maximum full scale limit set at the factory, but to allow the 4 mA endpoint to remain at 0 psig, perform only the steps listed in 6.2 below. **NOTE:** The RED wire, which is not connected during normal 4 to 20 mA operation, assumes an important role in the following procedures.

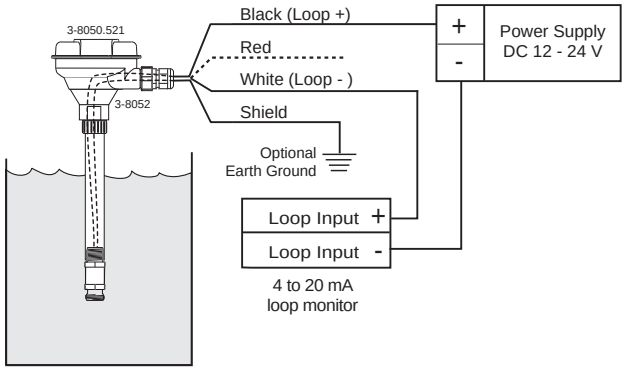

6.1 To adjust the 4 mA endpoint in the field:

- Carefully remove the heat shrink tube that is protecting the red wire.
- Expose the sensor to the pressure desired to correspond with 4 mA (any pressure in the operating range).
- With power applied as described in Section 5, connect the RED wire to the WHITE wire for 15 seconds.
  (After about 10 seconds the output will drop to 3.6 mA and remain there until the RED wire is disconnected.)
- Disconnect the RED wire from the WHITE wire; the 4 mA endpoint has been adjusted.

NOTE: The output will act as a switch if the 4 and 20 mA endpoints are set very near to the same value.

6.2 To adjust the 20 mA endpoint in the field:

- Expose the sensor to the pressure desired to correspond with 20 mA (any pressure in the operating range).
- With power applied as described in Section 5, connect the RED wire to the BLACK wire for 15 seconds.
  (After about 10 seconds the output will rise to 22 mA and remain there until the RED wire is disconnected.)
- Disconnect the RED wire from the BLACK wire; the 20 mA endpoint has been adjusted.

NOTE: The output will act as a switch if the 4 and 20 mA endpoints are set very near to the same value.
Minimum span is ±2% of maximum range.

- After adjusting the 4 to 20 mA span, protect the red wire by installing the provided wire nut.
- For easier re-spanning use the Signet 0250 USB to Digital (S^3L) Configuration/Diagnostic Tool.

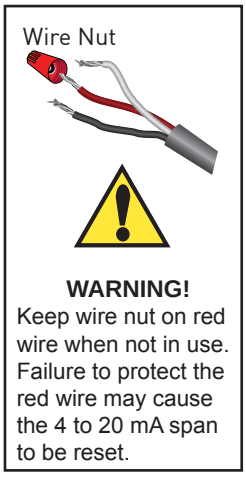

6.3 To restore factory span:

- Disconnect power to the sensor. Wait 10 seconds to allow circuit to discharge.
- Connect the RED wire to the WHITE wire.
- Apply power as described in Section 5, but with the RED wire connected to the WHITE wire for 15 seconds.
  (After about 10 seconds the output will drop to 3.6 mA and remain there until the RED wire is disconnected.)
- Disconnect the RED wire from the WHITE wire; factory settings have been restored.
- Replace cap on RED wire.

Mfr. Part No.	Factory Span
3-2450-7U	4 to 20 mA = 0 to 10 psig
3-2450-7L	4 to 20 mA = 0 to 50 psig
3-2450-7H	4 to 20 mA = 0 to 250 psig

7. Ordering Information

Mfr. Part No.	Code	Description
3-2450-3U	159 000 683	10 psig, Digital (S^3L), ½ in. Male Union, 15 ft Cable
3-2450-7U	159 000 906	10 psig, 4 to 20 mA, ½ in. Male Union, 15 ft Cable
3-2450-3L	159 000 682	50 psig, Digital (S^3L), ½ in. Male Union, 15 ft Cable
3-2450-7L	159 000 908	50 psig, 4 to 20 mA, ½ in. Male Union, 15 ft Cable
3-2450-3H	159 000 681	250 psig, Digital (S^3L), ½ in. Male Union, 15 ft Cable
3-2450-7H	159 000 910	250 psig, 4 to 20 mA, ½ in. Male Union, 15 ft Cable
3-8050-1	159 000 753	Universal Mount Junction Box
3-8052-1	159 000 755	¾ in. NPT mount junction box
3-9000.392-1	159 000 839	Liquid tight connector kit, NPT (1 piece)
3-9000.392-2	159 000 841	Liquid tight connector kit, PG 13.5 (1 piece)
3-9900.396	159 001 701	Angle Adjustment Adapter Kit
5523-0322	159 000 761	Cable, 3 conductor + shield, 22 AWG, black/red/white/shield
3-0250	159 001 538	USB to digital (S^3L) configuration/diagnostic tool

+GF+

Georg Fischer Signet LLC, 3401 Aero Jet Avenue, El Monte, CA 91731-2882 U.S.A. • Tel. (626) 571-2770 • Fax (626) 573-2057
For Worldwide Sales and Service, visit our website: www.gfsignet.com • Or call (in the U.S.): (800) 854-4090
For the most up-to-date information, please refer to our website at www.gfsignet.com

© Georg Fischer Signet LLC 2013

Signet 8450 Pressure Transmitters

Check out the 9900 Transmitter for your single channel needs

Member of the ProcessPro® Family of Transmitters

Panel Mount

Pipe, Wall, Tank and Integral Mount

The Signet 8450 Pressure Transmitter is a unique instrument that offers local or remote display with current and relay outputs. This model offers exceptional repeatability and accuracy over a wide operating pressure range. The instrument is available in field and panel mount configurations, dual channel input and is equipped with two 4 to 20 mA outputs, fully scaleable and reversible for each input channel. Dual open collector outputs.

The unit also has the ability to accept other sensors with 4 to 20 mA output, via the Signet 8058 Signal Converter. The chemical resistant NEMA 4X/IP65 front face is found in both the highly visible field mount or black panel mount instrument, both featuring a self healing window, a standard ¼ DIN cutout and large push buttons for easy navigation. Programming capabilities are available for single point calibration, setting of relays and outputs, and output simulation function for complete system testing. The dual input version allows difference calculation (ΔP) and offers significant cost savings with independent dual outputs.

Features

- **Digital (S^3L) input for stable and reliable reading**
- **Dual sensor input**
- **Pressure can be displayed in psi, bar or kPa**
- **Field scaleable dual 4 to 20 mA output**
- **Dual open collector output**
- **NEMA 4X/IP65**
- **Chemical resistant enclosure and self-healing window**

LISTED
MEASURING EQUIPMENT
77CJ

Applications

- **Pump, Filter or Pipe Protection**
- **Pressure Regulation/Monitoring**
- **Over or Under Pressure Alarm**
- **Pump Servicing**
- **HVAC**
- **Chemical Processing**
- **Scrubber Systems**
- **Water Management**
- **Irrigation Systems**
- **Wastewater**

Specifications

General		
Compatibility	Signet 2450 Pressure Sensor versions with digital output or other sensors with 4 to 20 mA output (via Model 8058)	
Accuracy (based on 2450)	±1% of full scale	
Display	Alphanumeric 2 x 16 dot matrix LCD	
Update Rate	1 second	
Contrast	User selected, 5 levels	
Materials		
Enclosure	PBT	
Keypad	Sealed 4-key silicone rubber	
Panel and Case Gasket	Neoprene	
Window	Polyurethane coated polycarbonate	
Electrical		
Power	12 to 24 VDC ±10% regulated	
	60 mA max.	
Current Output	4 to 20 mA, isolated, passive, fully adjustable and reversible	
Max. Loop Impedance	50 Ω max. @ 12 V	
	325 Ω max. @ 18 V	
	600 Ω max. @ 24 V	
Update Rate	100 ms	
Accuracy	±0.03 mA	
Relay Outputs		
Mechanical SPDT contacts	High, Low, Off	
Maximum Voltage Rating	5 A @ 30 VDC, 5 A @ 250 VAC resistive load	
Hysteresis	User adjustable	
Open-Collector Output	High, Low, Off	
	Optically isolated, 50 mA max, sink, 30 VDC max. with pull-up resistor.	
Hysteresis	User adjustable	
Environmental		
Operating Temperature	-10 °C to 70 °C	14 °F to 158 °F
Storage Temperature	-15 °C to 80 °C	5 °F to 176 °F
Relative Humidity	0 to 95%, non-condensing	
Enclosure	NEMA 4X/IP65 (front face only on panel mount); field mount is 100% NEMA 4X/IP65	
Shipping Weight		
	0.325 kg	0.8 lb
Standards and Approvals		
	CE, FCC, UL, CUL	
	RoHS compliant, China RoHS	
	Manufactured under ISO 9001 for Quality and ISO 14001 for Environmental Management and OHSAS 18001 for Occupational Health and Safety	

Dimensions

3-8450-XP Panel Mount

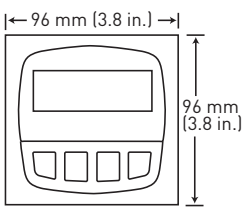

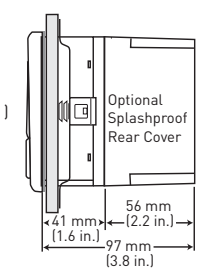

Field Version with Universal Mount

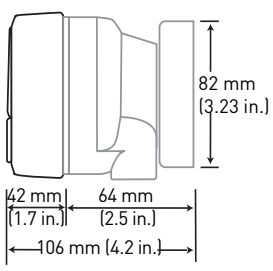

System Overview

Panel Mount	Field Mount - Pipe, Tank, Wall	4 to 20 mA input	Integral Mount
Signet 8450 Pressure Instrument	**Signet 8450 Pressure Instrument** with 3-8050 Universal Mount Kit	Customer Supplied Chart Recorder Programmable Logic Controller 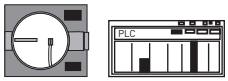	**Signet 8450 Pressure Instrument** with 3-8052 Integral Mount Kit

Signet Sensor 2450

All sold separately

In-Line Installation - Customer supplied Fittings

Submersible Installation - Customer supplied pipe extension or conduit with 3/4 in. FNPT threads*

*Refer to the Signet Submersion brochure located in the K-Factors Fittings and More Kit (3-0000-709) for installation suggestions and options.

8058 signal converter & 8059 external relay module also compatible

Ordering Notes

1) Field mount instruments can be mounted with a sensor in an integral configuration by choosing the following:
   - Order integral adapter kit PN 3-8052 (sold separately) to connect the transmitter directly onto the sensor.
2) An optional splashproof rear cover can be ordered separately if needed.
3) Use the universal mounting kit with the field mount transmitter to mount to a pipe, tank or wall.
4) To mount the panel version on a wall, use the heavy duty wall mount bracket.
5) Order RC filter kits to protect relays from voltage spikes.

Please refer to Wiring, Installation, and Accessories sections for more information.

Ordering Information

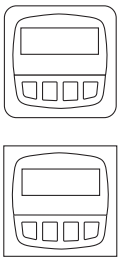

Mfr. Part No.	Code	Input	Output	Power
Pressure Transmitter				
Field mount for pipe, wall, tank, or integral mounting				
3-8450-3	**159 000 045**	Two	Two 4 to 20 mA outputs and two open collectors	4 wire
Panel mount with mounting bracket and panel gasket				
3-8450-3P	**159 000 046**	Two	Two 4 to 20 mA outputs and two open collectors	4 wire

Accessories and Replacement Parts

Mfr. Part No.	Code	Description
Mounting		
3-8050	**159 000 184**	Universal mounting kit
3-8052	**159 000 188**	¾ in. Integral mounting kit
3-8052-1	**159 000 755**	¾ in. NPT mount junction box with liquid tight connector and cap with terminal block
3-8050.395	**159 000 186**	Splashproof rear cover (panel mount only)
3-0000.596	**159 000 641**	Heavy duty wall mount bracket (panel mount only)
3-5000.598	**198 840 225**	Surface mount bracket (panel mount only)
3-9900.396	**159 001 701**	Angle adjustment adapter kit
Liquid Tight Connectors		
3-9000.392	**159 000 368**	Liquid tight connector kit for rear cover (3 connectors)
3-9000.392-1	**159 000 839**	Liquid tight connector kit, NPT (1 connector)
3-9000.392-2	**159 000 841**	Liquid tight connector kit, PG 13.5 (1 connector)
Other		
3-8058-1S	**special order**	4 to 20 mA to digital signal converter, single input, loop powered
3-8058-2S	**special order**	4 to 20 mA to digital signal converter, dual input, loop powered

3-8450.099 Rev D (4/13)
© Georg Fischer Signet LLC
3401 Aero Jet Avenue, El Monte, CA 91731-2882 U.S.A. • Tel. (626) 571-2770 • Fax (626) 573-2057 • www.gfsignet.com • e-mail: signet.ps@georgfischer.com
Specifications subject to change without notice. All rights reserved. All corporate names and trademarks stated herein are the property of their respective companies.

APPENDIX II

SUPPLIER INFORMATION

This section provides information on supplies, expendables, and service providers that may be necessary as part of maintaining the system.

Contract Operations and Maintenance Services

Environmental Systems Service, Ltd. (218 North Main Street, Culpeper, VA, 800-541-2116) has provided contract operations and maintenance of the NDTS.

Extraction Well and Well Pump Service

Eichelbergers, Inc. (107 Texaco Rd, Mechanicsburg, PA, 800-360-0660) installed the latest well pump and motor on March 31, 2014. They have also performed some monitoring well abandonments and other well-related services at the site.

Filter Bags

The bags used are standard Model 88-30 (size 8-in x 30-in) filter bags. 50-micron polyester felt bags are typically used. The latest supplied used to purchase the bags was Schrader Environmental Services, Inc. (212 Pine River, Ithaca, MI, 989-875-6500).

Electrical Repair Services

Benfield Electric Co. of Virginia, Inc. (Manassas, VA, 888-321-6200) has typically provided electrical repair services for the NDTS.

EVO Supplier

RNAS Remediation Products, Inc. (6712 West River Road, Brooklyn Center, MN, 763-585-6191) provides EVO to the site. The current formulation is the Newman Zone Buffered Nonionic formulation (PYR6730T). It is provided in 275-gallon totes.

Propane for the IW-8 Injection Well Shed Space Heater

Suburban Propane (1411 Daves Store Lane, Gainesville, VA, 703-754-4141) provides propane for the space heater tank.

Fuel Oil for the Administrative Building Furnace

S.A. McMichael, Inc. (PO Box 8, Nokesville, VA, 703-594-2131) provides No. 2 fuel oil for the administrative building furnace.

Trash Pickup

EnviroSolutions NOVA Hauling District (now acquired by Waste Management) picks up the trash roll off at the site.

Injection Line Cleanout and Miscellaneous Industrial Services

Hepaco, LLC (804-275-5380) has provided various industrial services to the site. These services have included the following:

- Injection Line Cleanout
- Moving EVO totes into the EVO System CONEX shed
- Picking up and disposing of Investigation Derived Wastes (IDW)

APPENDIX III

EXAMPLES OF SYSTEM DOCUMENTATION FORMS

SITE: ARC GROUNDWATER REMEDIATION SITE
OWNER: SEQUA CORPORATION
CLIENT: TRC

ENVIRONMENTAL SYSTEMS SERVICE, LTD.

MONTH:

				EXTRACTION WELL BLD 73B				*INJECTION WELL BLD*			*TREATMENT BLD 72C*															
Date	Day	Tech Initials	Time Onsite	Extract Well pump	Extract Well pump	Extract Well pump	Extract Well pump	Injection System IW8-A	Injection System IW8-B	Pressure Relief	TREAT. BLDG.	TREAT. BLDG.	TREAT. BLDG.	TREAT. BLDG.	GAC Inlet	Extract. Well	Bag Filters	IW8-A	IW8-A	IW8-A	IW8-B	IW8-B	IW8-B	Injection IW8 Panel	Injection IW8 Panel	Injection IW8 Panel
				Totalizer	PSI	(gpm)	VFD	PSI	PSI	PSI	BF-A in PSI	BF-A out PSI	BF-B in PSI	BF-B out PSI	PSIG	FLOW	PSI	Totalizer	Flow	PSI	Totalizer	Flow	PSI	IW8-A Flow	IW8-B Flow	Injection PSI
06/01/18	FRI																									
06/02/18	SAT																									
06/03/18	SUN																									
06/04/18	MON																									
06/05/18	TUE																									
06/06/18	WED																									
06/07/18	THU																									
06/08/18	FRI																									
06/09/18	SAT																									
06/10/18	SUN																									
06/11/18	MON																									
06/12/18	TUE																									
06/13/18	WED																									
06/14/18	THU																									
06/15/18	FRI																									
06/16/18	SAT																									
06/17/18	SUN																									
06/18/18	MON																									
06/19/18	TUE																									
06/20/18	WED																									
06/21/18	THU																									
06/22/18	FRI																									
06/23/18	SAT																									
06/24/18	SUN																									
06/25/18	MON																									
06/26/18	TUE																									
06/27/18	WED																									
06/28/18	THU																									
06/29/18	FRI																									
06/30/18	SAT																									

ARC GROUNDWATER REMEDIATION SITE
WEEKLY OPERATIONS REPORT

Date: | **Weather:**

Field Personnel:

Note: Please use the value -9999 to represent "N/A"

NORTHERN SYSTEM (DW-13)

Download Data? | **Time:** | **Transfer Pump Operational?**

EVO Transfer Pump?

Flow Monitoring				
Point	Totalizer	Est. Flow (gpm)	Pressure (psi)	Comments
DW-13 (Extraction)			20	
IW-8A (Injection)			59	
IW-8B (Injection)			52	
Pressure Monitoring				
DW-13 Well Head				
Main Line Bag Filter Inlet				
Bag Filter A-Inlet				
Bag Filter A-Outlet				
Bag Filter B-Inlet				
Bag Filter B-Outlet				
GAC Inlet				
Combined Injection				
IW-8A @ Well Head				
IW-8B @ Well Head				
IW-8A @ Building				
IW-8B @ Building				

EVO FEED

Normal Daily Operation Since Last Inspection:

Change Supply Vessel:

Level Decrease Since Last Inspection: in

Injection Bld Propane %

Injection Bld Propane Setting

Volume Injected Since Last Inspection: gal total

Conversion: 1 Tote 1" = 8 gal

Total Volume Remaining: gal total

4 Totes 1" = 32 gal

Comments/Maintenance/Adjustments:

Operations normal. EVO currently shut off until ESS maintenance repairs.

Safety Checks:	YES	NO
Eye Wash Station		N/A
Fire Extinguisher		
First Aid Kit		
Data Recovered from PLC		
Site Readings Logged On Monthly Form		
All Buildings Locked		
Alarm System Activated		

Admin Bld Checks:	YES	NO	Com
Check all rooms			
Flush faucets			
Flush toilets			
Thermosat			
Reset security & lock bld			
Oil supply for furnace			
Solid waste dumpster			

APPENDIX IV

SAMPLING AND ANALYSIS PLAN AND GROUNDWATER MONITORING AND WELL REDUCTION PLAN

SAMPLING AND ANALYSIS PLAN

ATLANTIC RESEARCH CORPORATION
RCRA CORRECTIVE ACTION SITE
GAINESVILLE, VIRGINIA

Project No. 229931.0003

July 9, 2015

Prepared For:

Atlantic Research Corporation
c/o 300 Blaisdell Road
Orangeburg, New York

Prepared By:

TRC Environmental Corporation
11231 Cornell Park Drive
Cincinnati, Ohio 45242

TRC
Results you can rely on

TABLE OF CONTENTS

1.0 INTRODUCTION 1

2.0 SAMPLING PLAN 1
2.1 SAP Introduction and Objectives 1
2.2 Sampling Locations and Frequency 2
2.3 Field Methods 3
2.3.1 Water Level Measurements 3
2.3.2 Ground Water Sampling 4
2.3.3 Surface Water Sampling 5
2.3.4 Laboratory Analytical Methods 6
2.3.5 Field Equipment Decontamination 7
2.3.6 Sample Labeling 7
2.3.7 Packaging and Shipping 8
2.3.8 Investigation Derived Waste Handling 8
2.4 Field QA/QC Program 8
2.4.1 Field QA/QC Samples 9
2.4.2 Field Instrument Calibration and Operation 9
2.5 Sample Transport and Handling 10
2.5.1 Sample Custody and Documentation 10
2.5.2 Chain-of-Custody 10
2.6 Field Documentation 11
2.7 Health and Safety 12

3.0 LABORATORY ANALYSIS 12
3.1 Project Laboratory 12
3.2 Laboratory Quality Control 12
3.3 Laboratory Sample Custody and Documentation 13

4.0 DATA EVALUATION 14
4.1 Data Reduction and Validation 14
4.2 Data Evaluation 15
4.3 Data Quality Objectives 16

5.0 RECORDKEEPING AND REPORTING 17
5.1 Introduction 17
5.2 Field and Monitoring Results 18
5.3 Annual Report 18

6.0 REFERENCES 20

List of Figures

1. Facility Location and Features
2. Deep Aquifer Ground Water Sampling Plan
3. Shallow Aquifer Ground Water Sampling Plan
4. Surface Water Ground Water Sampling Plan
5. Other Locations

List of Tables

1. Proposed Sampling Locations
2. Locations to Retain and for Water Level Collection

Appendices

1. Boring Logs and Well Construction Diagrams

ACRONYMS

µg/L	micrograms per liter
AOC	Administrative Order on Consent
ARC	Atlantic Research Corporation
AWOC	Ambient Water Quality Criteria
BRA	Baseline Risk Assessment
COCs	constituents of concern
COC	Chain-of-Custody
Geosyntec	Consultants Inc.
HASP	Health and Safety Plan
IDW	investigation derived waste
MCL	Maximum Contaminant Level
NDTS	Northern Deep Ground Water Treatment System
QAPP	Quality Assurance Project Plan
QA/QC	Quality Assurance / Quality Control
RCRA	Resource Conservation and Recovery Act
ROD	Record of Decision
RSL	Regional Screening Level
SAP	Sampling and Analysis Plan
TRC	TRC Environmental Corporation
TTU	thermal treatment unit
TTF	thermal treatment facility
USEPA	United States Environmental Protection Agency
VOCs	volatile organic compounds

1.0 INTRODUCTION

This Sampling and Analysis Plan (SAP) presents the plan for ground water monitoring at Atlantic Research Corporation's (ARC's) former rocket motor facility (Facility), located at 5945 Wellington Road, Gainesville, Virginia 20155 (Site), which is conducting Resource Conservation and Recovery Act (RCRA) Corrective Action with the United States Environmental Protection Agency (USEPA; RCRA ID No. VAD023741705). Ongoing remediation and ground water monitoring are being conducted under the September 30, 1991 RCRA Record of Decision (ROD) for the Site and the November 9, 1992 Administrative Order on Consent (AOC; Docket Number RCRA-III-056-CA) for the implementation of corrective measures under the ROD (CMI Order).

The CMI Order provided ARC the opportunity to implement corrective measures in a phased approach due to the large area of the property (approximately 420 acres), and the long and varied history of chemical use and management at various locations on the Site prior to ARC discontinuing operations on the property in 2004/2005. With the successful completion of soil interim measures approved by USEPA in 2013 to achieve commercial/industrial standards at the Site and the ongoing progress of ground water remediation, a new SAP is warranted to focus on the remaining ground water remediation objectives at the Site. The inactive Facility and surrounding properties are shown on Figure 1.

It is anticipated that the plan would begin implementation in May 2015, based on preliminary approval of the monitoring network by USEPA, and continue until future modifications are approved by USEPA based upon recommendations by ARC and its consultant due to: 1) continued ongoing Site progress; 2) changes associated with the ground water remediation northern deep treatment system (NDTS); 3) changes based on the future Corrective Measures Proposal; and/or 4) planned future Site re-development activities by the property owner (Gainesville Associates, LLC).

2.0 SAMPLING PLAN

2.1 SAP Introduction and Objectives

This SAP replaces the *Work Plan for 2011-2012 Groundwater Monitoring and Well Maintenance Activities* (Geosyntec, 2011) and is based on discussions with USEPA during a meeting at the Site with ARC and TRC Environmental Corporation (TRC) in March 2015, and follow up interactions with USEPA during April 2015. During these interactions, a network of ground water and surface water locations was agreed upon to provide ongoing "source," "performance," and "sentinel" monitoring of the Site to track remedial progress of the residual dissolved phase plumes present at the Site.

The intent of this SAP is to generate periodic information to support conclusions in future reports regarding the scope and progress of the remedy and future reductions in activity (e.g., revised sampling and well abandonment). In addition to the monitoring network, this SAP identifies sampling and laboratory procedures, data evaluation, and reporting requirements.

The general objectives of the sampling and analysis program include the following:

- Conduct ground water monitoring at the downgradient property boundary to verify that conditions are stable and continue to not represent an unacceptable risk based on the Baseline Risk Assessment (BRA; Environ, 2012) and applicable USEPA risk-based screening levels for the Site. To address this objective, monitoring wells along the southern boundary will be sampled periodically. These monitoring wells are considered "sentinel" wells and will be monitored semi-annually. *(Sentinel Monitoring)*
- Conduct ground water monitoring at residual source areas in the northern portion of the Site to verify the ongoing effectiveness of the operating NDTS, and at other residual source areas to monitor natural attenuation following completed interim actions (including wells in the vicinity of Buildings 5, 15, 28, and 40 as well as the former thermal treatment facility [TTF] area). System operation and the reduction of constituents of concern (COCs) in these areas will be monitored and evaluated based on stability and concentration trends. To address this objective, monitoring wells in these areas of the Site will be sampled periodically. These monitoring wells are considered "source" wells and will be monitored annually. *(Source Monitoring)*
- Conduct ground water monitoring in areas between source and sentinel wells to evaluate potential migration of COCs towards the property boundary. To address this objective, ground water monitoring will be conducted in intermediate areas to detect changing conditions, if any. These monitoring wells are termed "performance" wells and will be monitored annually. This includes limited ground water monitoring of wells positioned downgradient of the vicinity of the former TTF. *(Performance Monitoring)*
- Conduct surface water monitoring of perennial streams on the Site to verify that COC concentrations do not exceed risk-based screening levels at the Site boundary.

The ground water monitoring network was assessed to identify key wells to include in an effective long-term monitoring program that will achieve objectives listed above.

2.2 Sampling Locations and Frequency

Monitoring locations that are part of the proposed sampling plan (60 locations) will be monitored as indicated on Table 1 and on Figures 2 through 4. This monitoring covers the deep aquifer, shallow aquifer, surface water, and NDTS operational samples. The monitoring locations address the primary goals at the site listed above and are specifically divided into three main groups:

- Boundary Verification "Sentinel" – Ground water monitoring at the downgradient property boundary to verify that conditions are stable and continue to not represent an unacceptable risk based on the BRA and applicable USEPA risk-based screening levels for the Site.
- NDTS System area and/or "Source" Area Monitoring – Ground water monitoring at residual source areas in the northern portion of the Site to verify the effectiveness of the operating NDTS, and at other residual source areas to monitor natural attenuation following completed interim actions (including wells in the vicinity of Buildings 5, 15, 28, and 40 as well as the former thermal treatment

facility [TTF] area). The operation and reduction of COCs in this area as well as stability and concentration trends will be monitored.

- "Performance" Monitoring – Ground water monitoring will be conducted in intermediate areas between residual sources and the property boundary to detect potentially changing downgradient conditions.

Sampling will be conducted on a semi-annual basis in the Spring and Fall and on an annual basis in the Spring depending on location and objectives.

Although 60 locations are planned for sampling going forward, 97 other sample locations have been part of the sampling network since 2011 while previous investigation and interim actions were being conducted. More than 200 separate locations are also in the process of being properly closed and abandoned as approved by USEPA. The 97 locations are identified on Table 2 and Figure 5, which list and depict the monitoring locations that are not included within the current sampling plan, but will be retained and managed on-site. Several of these locations will be utilized for annual ground water potentiometric surface measurements and all will be subjected to annual maintenance review. Historical monitoring well construction and boring logs for the wells planned for sampling going forward are provided in Appendix I.

2.3 Field Methods

2.3.1 Water Level Measurements

Water level measurements will be collected annually from the wells as indicated on Table 2 and used to prepare a ground water potentiometric surface map. The measurements will generally be collected prior to beginning sampling of the monitoring wells. The field activities associated with ground water level measurements will follow TRC's Standard Operating Procedures (SOPs). The methodology will consist of the following primary elements:

- Depths to the water level in the monitoring wells will be measured with a Solinst electronic water level meter or equivalent.
- The measurements will be collected while the NDTS ground water pump and treat system is active. In the event that the system is down, the field crew will contact the project manager to determine how long the system may have been down and whether a timely restart is possible, in which case, water level measurements may be collected after ground water sampling to allow re-equilibration of water levels. If the system cannot be restarted during the sampling event, measurements will be taken while the system is not operating and documented as such.
- Depths to water will be subtracted from the respective reference elevation of the top of casing in order to calculate the elevation from the potentiometric heads of the ground water.
- These measurements will be used to prepare potentiometric contours figures for the deep and shallow aquifers.

The ground water elevation map for the deep ground water system will be used to verify that the extraction system is meeting its objectives to capture elevated concentrations of COCs in the north central portion of the facility and mitigate constituent of concern migration towards the downgradient property boundary.

2.3.2 Ground Water Sampling

Ground water monitoring wells at the Site will be sampled via low-flow sampling techniques using submersible electric pumps. Purging of the ground water will be performed at relatively low flow rates (between 0.1 and 0.5 liters per minute) in order to minimize drawdown of the surrounding water table and minimize stress on the formation. Water purged from the wells will be monitored for the following water quality field parameters: temperature, pH, specific conductivity, dissolved oxygen (DO), oxidation-reduction potential (ORP), and turbidity to document changes in water quality. Samples will be collected when three consecutive readings indicate stability in the field parameters. Care should be taken to sequence the sampling of wells to minimize the potential for impacts due to cross-contamination. In general, wells should be sampled from the southeast to the northwest, starting with property boundary locations and ending with TTU and NDTS area locations.

The procedures to be followed for ground water sampling are:

1. Obtain appropriate, laboratory-prepared sample containers prior to sampling.
2. Determine the appropriate level of Health and Safety according to the approved Health and Safety Plan (HASP).
3. Calibrate the field instruments (e.g., YSI 600) according to the procedures outlined in Section 2.4.2 of this document.
4. Obtain a depth to water measurement with a water level meter.
5. Determine the depth of the pump and sample to be collected. Table 1 indicates the approximate depth of the sample to be collected and is consistent with past sample collection and based on the following criteria. The submersible pump should be set either to the midpoint of the screen interval or, in the case of an open borehole, to the midpoint of the water column. In some cases, a depth correlating with significant bedrock fractures will be used. In addition to Table 1, Appendix I includes copies of historical boring and monitoring well construction logs where available.
6. Install a clean stainless-steel submersible pump to purge the wells. Dedicated tubing shall be used for each well. Attach dedicated pump discharge tubing to the flow through cell.
7. Operate the pump at a low flow rate (between 0.1 and 0.5 liters per minute). Use a graduated cylinder or other graduated container to estimate the flowrate. Adjust pump settings to achieve desired flowrate that also minimizes drawdown of the initial water level (i.e., <0.3 ft of the initial water level).
8. Manage purge water in accordance with the investigation derived waste (IDW) Plan (Section 2.3.8).
9. Record periodic water quality field parameters. This may be every three to five minutes or each time the internal volume of the flow cell is replaced with water during purging. Additionally, document color, clarity and any noticeable odors. Water will continue to be purged from the wells until the

drawdown of water level has stabilized and three consecutive measurements have stabilized according to the following criteria:

- pH, ± 0.1;
- temperature, ± 10%;
- specific conductivity, ±3%;
- dissolved oxygen (DO), ± 10%; and
- turbidity, ± 10%.

10. Put on disposable nitrile sampling gloves prior to procuring sample. Gloves providing cut protection will be worn when handling glassware. Immediately following purging activities (after the ground water has reached stabilization), laboratory provided sample containers (with the appropriate type and volume of preservative) will be filled directly from the sample pump discharge tube while maintaining the flow rate established during purging to minimize any potential agitation of the ground water. Samples collected for volatile organic compounds (VOCs) shall be collected in 40-mL glass vials with no head space as the first sample.
11. Obtain MS/MSD and duplicate samples following procedures set forth in Section 2.4.1 of this document.
12. Check to make sure the vial caps on the sample bottle are tight and then immediately place in a cooler with ice.
13. Follow the sample handling and labeling procedures outlined in Sections 2.3.6 and 2.3.7.
14. Complete field forms and enter sampling information in the field log book.

Field water quality measurements will be obtained using calibrated portable instruments capable of measuring DO, ORP, pH, temperature, turbidity, and specific conductance. Results of manufacturer-recommended calibration checks and any maintenance conducted on the field measurement instrument will be recorded in the field logbook or on a field data sheet. Field measurements will be conducted after instrument calibration is performed according to the manufacturer's instruction manual for the instrument. Results will be recorded as follows:

- DO to the nearest 0.1 mg/L,
- ORP to the nearest 0.1 millivolt (mV),
- specific conductance to the nearest 1 microSiemens per centimeter (µS/cm),
- turbidity to the nearest 0.1 NTU,
- pH to the nearest 0.1 pH unit, and
- temperature to the nearest 1°C.

2.3.3 Surface Water Sampling

Surface water samples will be collected following the protocol outlined below:

1. Obtain appropriate laboratory-prepared sample containers prior to sampling.
2. Determine the appropriate level of Health and Safety according to the approved HASP.

3. Use identification markers to identify the water body bank location most proximal to the point of sampling. The marker should be placed so that it will not be submerged during periods of high water.
4. Locate the point of sample collection. A line drawn between the marker and the actual sample location should be perpendicular to the surface water edge. Measure the distance between the sample point and marker. Sample points will be in an area of minimal turbulence to assure maximum sampling representativeness.
5. Measure the depth of water at the point of sampling. The depth should be no less than one foot, if possible.
6. Measure field water quality measurements including temperature, pH, specific conductance, DO and ORP with portable field instruments.
7. Collect the water sample by submerging a dedicated, laboratory cleaned glass jar to approximately one-half the depth of the water depth at the sampling point and then decanting water into sample vials.
8. Obtain QA/QC samples following procedures set forth in Section 2.4.1 of this document.
9. As appropriate, follow the sample handling and recording procedures as detailed Sections 2.3.6 and 2.3.7.
10. Complete field forms and enter sampling information in the field log book (Section 2.6).

2.3.4 Laboratory Analytical Methods

The samples collected for chemical analyses will be analyzed using the methods listed in the following table. Sample containers will be provided by the project laboratory, and will be preserved as indicated on the following table. All sample preservation additives will be measured and placed in the appropriate sample containers by the laboratory prior to sampling. Each sample will be placed in a cooler with ice immediately after collection.

Analyte	Laboratory Method	Containers	Preservative
VOCs	8260B	40 ml Vials	HCL
Perchlorate	6850	40 ml Vials	None
1,4-dioxane	8270C SIM	8 ounce Amber Jar	None

The routine analysis of VOCs in ground water and surface water at the site has utilized a reduced list of constituents for periodic monitoring since 2011. This list constituents will continue and includes the following VOCs:

- 1,1,1-Trichloroethane
- 1,1,2-Trichloroethane
- 1,1-Dichloroethane
- 1,1-Dichloroethene
- 1,2,3-Trichloropropane
- 1,2-Dichloroethane
- Benzene

- Carbon Tetrachloride
- Chloroethane
- cis-1,2-Dichloroethene
- Methylene Chloride
- Tetrachloroethene
- Trichloroethene
- Vinyl Chloride

2.3.5 Field Equipment Decontamination

Decontamination of non-dedicated and non-disposable sampling equipment will be performed prior to sampling and between sampling locations to prevent the introduction of extraneous material into samples and to prevent cross-contamination between sample locations. All such sampling equipment will be decontaminated as described below. Decontamination water will be collected in 5-gallon buckets or a similar container and placed in 55-gallon Department of Transportation (DOT)-approved drums or tote for temporary storage prior to proper disposal. Equipment decontamination will consist of the following:

1. Rinse with potable water. This initial rinse will remove loose material from the equipment. It is suggested that potable water be applied from a stainless steel Hudson-type sprayer or Nalgene™ squeeze bottle while holding the equipment over a 5-gallon bucket. An alternative rinsing method involves using a 5-gallon bucket or similar container, approximately 75% full of potable water. Periodic changing of this water is required.
2. Wash with Liquinox™ and potable water solution. This step will remove contamination from the equipment. It is suggested that a 5-gallon bucket or similar container, approximately 75% full of a non-phosphate detergent and water solution, and a long handled brush be used for this step. The non-phosphate detergent will be diluted as directed by the manufacturer. Periodic changing of this water is required.
3. Rinse with potable water. This step will rinse the detergent solution from the equipment. It is suggested that a 5-gallon bucket or similar container, approximately 75% full of water, and a long handled brush be used for this step. Periodic changing of this water is required.
4. Repeat step 2
5. Repeat step 3
6. Rinse with deionized or distilled water. This step will rinse away any residual detergent solution and potable water. It is suggested that a 5-gallon bucket or similar container, approximately 75% full of distilled water, be used for this step. Periodic changing of this water is required. An alternative rinsing method involves applying distilled water from a stainless steel Hudson-type sprayer or Nalgene™ squeeze bottler while holding the equipment over a 5-gallon bucket.

2.3.6 Sample Labeling

Each separate sample will be identified using a sample label. The sampler will complete all information using waterproof ink with the following information:

- sample identification number;
- job name and identification number;
- date and time of sample collected;
- preservation technique;
- type of analysis requested; and
- name of sampler.

This sample label contains the authoritative information for the sample. Inconsistencies with other documents will be settled in favor of the container label unless otherwise corrected in writing from the field personnel collecting samples. A chain-of-custody (COC) should reflect the same information as the label and be kept with the samples at all times.

2.3.7 Packaging and Shipping

When all samples have been collected at the end of the day, end of an event, or at most at the end of a week, samples will be retrieved from their storage location and packaged for shipment. During packaging, the COC form will be prepared as outlined in Section 2.5 of this document. Each bottle should be checked to verify the label is correct and matches field forms and the COC. The bottles should be packaged with appropriate packing materials (e.g., bubble wrap, foam) to protect the samples during shipment, and consolidated in plastic Ziploc bags as appropriate. When VOCs samples are included, lab-supplied trip blanks should be included with the samples and added to the COC. Once all sample bottles have been added to the cooler, the cooler should be filled to the top with ice. Once the COC is properly filled out and placed in a zip-lock bag within the cooler, the cooler should be sealed with a custody seal and tape. If more than one cooler is being shipped, only one COC is required. Transport the sample set via overnight courier, under executed COC as described in Section 2.5.2 of this document. A copy of the waybill should be retained with a copy of the COC and kept together. Alternatively, the samples can be relinquished to a laboratory courier.

2.3.8 Investigation Derived Waste Handling

Investigation Derived Waste (IDW) consists primarily of water purged during the sampling events. The water is staged in 5-gallon containers at each well and transferred to totes at a designated location on the Site. Following sampling, the IDW will be transported off Site for disposal at an approved disposal facility.

2.4 Field QA/QC Program

Sample collection, quality assurance/quality control procedures, and employment of data quality objectives will be conducted by TRC in accordance with the TRC's SOPs.

2.4.1 Field QA/QC Samples

During the monitoring event, the following QC samples will be collected at a minimum:

- One trip blank sample will be shipped with each sample cooler containing samples for VOC analysis. The trip blank sample will be analyzed for VOCs.
- One equipment rinse water sample per 20 investigative samples will be collected. The rinse water sample will be collected after the ground water sample equipment has been properly decontaminated at the end of the day. The sample will be collected by pouring laboratory grade water over the equipment, and collecting the rinse water off the pump into the appropriate sample containers. The laboratory grade water will be provided by the project laboratory.
- One duplicate sample per 20 investigative samples will be collected.
- Two field blanks will be collected by opening a container of laboratory grade water and allowing it to be exposed to the environment for 5 to 10 minutes. The exposed laboratory grade water will then be poured into the appropriate sample containers. This should allow for the accurate portrayal of the background environment. The location of collection should be noted in the field notes.
- One matrix spike/matrix spike duplicate (MS/MSD) sample will be collected during the sampling event. The lab will be provided triple the volume for the MS/MSD sample indicated on the COC and analyzed as indicated on the sample location table.

2.4.2 Field Instrument Calibration and Operation

All instruments and equipment used during sampling and analysis will be operated, calibrated, and maintained according to the manufacturer's guidelines and recommendations.

Operation, calibration, and maintenance will be performed by trained personnel on a daily basis. If instruments appear to be reading incorrectly, additional calibration may be required. All maintenance and calibration information will be documented and will be available upon request. Appropriate corrective actions will be taken if a field instrument fails the instrument-specific calibration QC criteria. Corrective action steps will be as follows:

1. Check the instrument;
2. Investigate the cause of failure;
3. Recalibrate the instrument;
4. If the instrument recalibration still fails, call the instrument manufacturer or rental company technical support for assistance;
5. If the problem persists, send the instrument for service;
6. If the instrument is a rental, contact the rental office for immediate replacement of the instrument; and
7. If practicable, keep a backup instrument on site.

2.5 Sample Transport and Handling

Collected water samples will be labeled immediately after collection. If sample preservation requires temperature control, then samples will be stored in iced coolers or a refrigerator in an access-controlled area of the site. The information on the sample label will include the information indicated in Section 2.3.6. Samples will be packaged and shipped to the project laboratory as indicated in Section 2.3.7.

2.5.1 Sample Custody and Documentation

An overriding consideration for data resulting from laboratory analyses is the ability to demonstrate that the data are legally defensible (i.e., that the samples were obtained from the locations stated and that they reached the laboratory without alteration). To accomplish this, evidence of collection, shipment, laboratory receipt, and laboratory custody until disposal will be documented through the COC record. A sample is considered to be in custody if the following applies to the sample:

- It is in actual possession or in view of the person who collected the samples;
- It is locked in a secure area;
- It is placed in an area restricted to authorized personnel; or
- It is placed in a container and secured with an official custody seal, such that the sample cannot be reached without breaking the seal.

If sample preservation requires temperature control, then samples will be stored in iced coolers or a refrigerator in an access-controlled area of the site. Sample custody will be the responsibility of the field manager or on-site designee from the time of sample collection until the samples are accepted by the courier service for delivery to the laboratory. Thereafter, the laboratory performing the analysis will maintain custody.

2.5.2 Chain-of-Custody

COC records will be filled out for all samples to establish the documentation necessary to trace sample possession from the time of collection. In addition to providing a custody exchange record for the samples, the COC record serves as a formal request for sample analyses. The COC record lists each sample and the individuals performing the sample collection, shipment, and receipt. The project laboratory will provide a COC form. The following information will be recorded on the COC record:

- Project name;
- Project location;
- TRC project number;
- TRC project manager;
- Sample identification;
- Date (of sample collection);
- Time (of sample collection to the nearest minute, military time);

- Sample type (composite or grab);
- Sample description (matrix);
- Number of sample containers;
- Analysis required;
- Remarks (including special instructions to the laboratory);
- Preservative information;
- Date/time (of custody transfer);
- Laboratory name;
- Turnaround time required; and
- Sampler's signature.

The COC records will be completed, signed, and distributed as follows:

- one copy will be retained by the sample coordinator for inclusion in the project files; and
- the original will be sent to the analytical laboratory with the sample shipment.

The COC record will be the controlling document to ensure that sample custody is maintained. The COC record will be initiated in the field by sampling personnel when they collect a sample. Each time the sample custody is transferred, the former custodian will sign the COC in the "Relinquished By" line, and the new custodian will sign the COC in the "Received By" line. The date and time will accompany each signature. The samples will be properly relinquished on the field COC record by the sampling team.

Custody seals are used to prevent unauthorized tampering with samples. The shipping container will be secured with a custody seal, thereby allowing custody to be maintained by shipping personnel until receipt by the laboratory.

2.6 Field Documentation

All information pertinent to field sampling will be recorded in a logbook or on log forms to maintain the integrity and traceability of samples. Detailed field data will be recorded on activity-specific field forms. All entries will be recorded in blue or black indelible ink. At a minimum, the logbook and/or corresponding field forms will contain the following information as applicable to the sample type collected:

- Project name and location (on the front page of the logbook for form);
- Date and time of collection for each sample;
- Sample identification number;
- Sample location (sampling point);
- Weather (rain, sunny, approximate temperature, etc.);
- Requested analysis;
- If prudent, a drawing of or a copy of a map with the sample locations;

- Field analyses performed, including results, instrument checks, problems, and calibration records for field instruments;
- Descriptions of deviations from this sampling plan and QAPP;
- Problems encountered and corrective action taken;
- Identification of field QC samples; and
- Any other events that may affect the samples.

Changes or corrections on any project documentation will be made by crossing out the item with a single line. The person performing the correction must initial and date the correction. The original item, although erroneous, must remain legible. The new information will be written adjacent to the crossed-out item. Corrections will be written clearly and legibly.

2.7 Health and Safety

An existing site-specific Health and Safety Plan (HASP) is updated prior to each sampling event and maintained in the field during implementation.

All field activities will be performed by individuals with appropriate training (i.e., Code of Federal Regulations [CFR] 1910.120) and in accordance with the site-specific HASP. Before field activities commence, the site-specific HASP shall be reviewed and signed by all contractor personnel conducting field work.

All subcontractors performing work during the investigation will be required to conduct all activities in accordance with applicable health and safety regulations and Site-specific requirements. A copy of the HASP will be provided to each subcontractor. However, subcontractors will be responsible for the health and safety of their personnel while working at the Site. Each day before work commences, a tailgate health and safety meeting shall be conducted by the contractor field team lead.

3.0 LABORATORY ANALYSIS

3.1 Project Laboratory

The project laboratory will be Lancaster Laboratories. The laboratory will provide final printable reports as PDF and as electronic EDD format suitable for input into the project database.

3.2 Laboratory Quality Control

Laboratory QC samples are used to evaluate the performance and reliability of each laboratory measurement parameter. QC samples such as method blanks, MS/MSDs, sample duplicates, and laboratory control standards are used to measure the accuracy and precision of the analytical methods and to evaluate matrix interference. The recovery of known additions is a part of laboratory analytical protocol. The use of additives at known concentrations allows detection of the matrix interferences and estimating the impact of these interferences when present. It also permits assessment of the efficiency of extraction procedures and overall accuracy of analysis.

Laboratory internal QC checks conducted by the certified laboratory will include the following:

- Laboratory control samples;
- Laboratory duplicates;
- Matrix spikes;
- Surrogate standards;
- Internal standards;
- initial and continued calibration verifications;
- Method and instrument blanks; and
- Post-digestion spikes.

3.3 Laboratory Sample Custody and Documentation

Samples will be delivered to laboratory personnel authorized to receive samples, also referred to as the "sample custodian." The custodian, upon receipt of a sample, will inspect the condition of the sample (including temperature of the cooler) and the custody seal, reconcile the information on the sample label against that on the COC record, assign a laboratory number, log the sample in the laboratory logbook, and store the sample in a secured sample storage room. The custodian will record all pertinent observations and measurements on the COC record, and sign the COC record.

Upon receiving the samples, the laboratory personnel will note on the original COC record any discrepancy in the number of samples, temperature within the cooler or broken samples. The TRC designated representative will be notified immediately of any problems identified with shipped samples. The TRC designated representative will, in turn, notify the project manager and together they will determine the appropriate course of action.

If the laboratory sample custodian judges sample custody to be invalid (e.g., custody seals have been broken), the laboratory will initiate a nonconformance report (NCR). The TRC designated representative will be immediately notified. The TRC designated representative will, in turn, notify the project manager. The project manager will make a decision, in consultation with the client, as to the fate of the sample in question on a case-by-case basis. The sample will either be processed "as-is" with custody failure noted along with the analytical data, or rejected with resampling scheduled, if necessary. The nonconformance associated with the samples will be noted on the appropriate certificate of analysis or case narrative.

The laboratory will initiate an internal COC that will track the sample within the various areas of the laboratory. Custody of the samples are transferred with the relinquishing signature of the sample custodian and the custody acceptance signature of the laboratory personnel. This procedure is followed each time a sample changes hands. The laboratory will archive the samples and maintain their custody, as required by the contract, or until further notification from the TRC designated representative, at which time the samples will either be returned to the project for disposal or disposed of by the laboratory.

4.0 DATA EVALUATION

4.1 Data Reduction and Validation

The project laboratory will perform analytical data reduction and review in-house under the direction of the laboratory QA officer. The laboratory QA officer will be responsible for assessing data quality and advising of any data which were rated "preliminary" or "unacceptable" or other qualifications based on the established QC criteria. Data reduction, review and reporting by the laboratory is typically conducted as detailed in the following procedure. However, the laboratory may perform data reduction, review and reporting in a slightly different manner.

1. Raw data produced and checked by the responsible analyst is turned over for independent review by another analyst.
2. The area supervisor reviews the data for attainment of quality control criteria established by the QAPP.
3. The area supervisor will decide whether any sample re-analysis is required.
4. Upon completion of all review and acceptance of the raw data by the supervisor, a report will be generated and sent to the laboratory Project Manager.
5. The laboratory Project Manager will complete a thorough inspection of all reports.
6. Upon acceptance of the preliminary reports by the Project Manager, final reports will be generated and signed by the laboratory manager or his designee.
7. A thorough review of approximately two to five percent of all data packages is performed by the Laboratory Quality Assurance Officer, or his designee.

Field data from direct-reading instruments (e.g., pH, conductance, turbidity, temperature) will not require reduction.

TRC's Data Validation Coordinator will conduct an evaluation of data reduction and reporting by the laboratory. This evaluation will consider the finished data sheets, field blank data, and recovery data for surrogate and matrix spikes. The material will be checked for legibility, completeness, correctness and the presence of requisite dates, initials, and signatures. The results of these checks will be assessed and reported to the Project Manager and the Project Field Coordinator noting any discrepancies and their effect upon the acceptability of the data. All information garnered for QA/QC checks will be discussed in the Data Validation report. The Project Manager will review and approve all validation reports. The reports will be retained electronically in the project's network file.

Validation of the analytical data will be performed by the Data Validation Coordinator based on the evaluation criteria outlined in the USEPA Contract Laboratory Program National Functional Guidelines for Superfund Organic Methods Data Review (USEPA, 2008) and USEPA Contract Laboratory Program National Functional Guidelines for Inorganic Superfund Data Review (USEPA, 2010). The assessment of analytical field data will include checks for adherence to laboratory QA procedures and accuracy and precision criteria; and the presence of transmittal errors and anomalously high or low parameter values.

The results of these data validations will be reported to the Project Managers and Project Field Coordinator, noting any problems and their effect upon the acceptability of the data.

Data produced from field measurements and sample collection activities that are used in the project reports will be appropriately identified and appended to the report. Where data have been reduced or summarized, the method of reduction will be documented in the report. In addition, field data will be audited by the Project Field Coordinator for anomalously high or low values that may appear to be inconsistent with other data.

At a minimum, the Data Validation Coordinator will review all holding times, instrument performance check sample results, results of initial and continuing calibration, and results of all blanks, surrogate spikes, MS/MSD, and laboratory control samples. In addition, the overall completeness of the data package deliverable will be evaluated. One hundred percent of the analytical data will be validated.

4.2 Data Evaluation

Data resulting from implementation of the SAP will be evaluated to assess the progress of remediation at the Site, achievement of the objectives identified in Section 2.1, and whether modifications to the SAP or Site remedy including the monitoring program may be warranted. The results of this data evaluation will be reported to USEPA (Section 5.0).

Data evaluation will include the following procedures:

- Water level measurements will be incorporated into the database and used to generate contour maps for the shallow and deep ground water at the Site.
- Published screening levels used for the Site will be reviewed and updated, as warranted, for comparison with sampling results. The Site screening levels are:
    - MCLs (http://water.epa.gov/drink/contaminants/index.cfm) where specified; and
    - USEPA regional screening levels (RSLs) (http://www.epa.gov/reg3hwmd/risk/human/rb-concentration_table/Generic_Tables/index.htm, accessed May 2014) – Tap Water Ingestion for COCs which do not have a specified MCL; the RSL screening value is the lower of the tap water ingestion criteria calculated at either the target cancer risk of 10^{-5} or target hazard quotient of 1.
    - Surface water concentration data are compared to the following screening levels:
        - Ambient Water Quality Criteria (AWQC) based upon the following hierarchy:
            - Chronic Virginia AWQC,
            - Acute Virginia AWQC,
            - USEPA Region 3 AWQC, and
            - USEPA Region 5 AWQC.
        - Site-Specific Recreator Surface Water Contact Criteria
- Analytical results will be summarized in tables and figures and compared to updated Site screening levels to identify exceedances.

    - Exceedances at sentinel locations, if any, will be noted for reporting to USEPA.
    - Tables will summarize analytical data for all sampling locations.
    - Figures will depict analytical data for all sampling locations for relevant COCs.
- Analytical results for individual wells will be compared to historical results to inspect for the presence of trends and outliers.
    - Historical data for relevant COCs detected at individual wells will be depicted on graphs.
    - Mann-Kendall trend analyses will be conducted for individual wells where appropriate.

4.3 Data Quality Objectives

The project is transitioning to a long-term ground water monitoring phase from investigation and interim actions, which have occurred since 2002 during the supplemental RFI and earlier under the 1991 ROD and 1992 CMI Order. With this transition, the monitoring needs are being refocused to the objectives discussed in Section 2.1. It is anticipated that the plan will continue until future modifications are approved by USEPA based upon recommendations by ARC and its consultant due to: 1) continued ongoing Site progress; 2) changes associated with the ground water remediation northern deep treatment system (NDTS); 3) changes based on the future Corrective Measures Proposal; and/or 4) planned future Site re-development activities by the property owner (Gainesville Associates, LLC).

Ongoing ground water monitoring is needed to:

- evaluate the progress of the remedy as it exists now and may be modified in the future;
- verify containment of elevated COCs by the active NDTS;
- assess the migration and attenuation of COCs from residual source areas at the Site;
- confirm that significant concentrations of COCs are not emanating from the property; and,
- review the adequacy and sufficiency of the monitoring program to determine the need for modification.

Attainment of the objectives will be evaluated by field data collection and comparison to historical data including:

- water level measurements (Section 2.3.1);
- source monitoring well sampling (Section 2.3.2);
- performance monitoring well sampling (Section 2.3.2);
- sentinel monitoring well sampling (Section 2.3.2); and
- surface water sampling (Section 2.3.3).

Resulting data will be:

- validated and incorporated into the project database (Section 4.1), which is maintained at TRC's office in Cincinnati, Ohio;
- evaluated for adequacy and sufficiency in number and distribution of completed sample results to address objectives;
- compared to Site screening levels (Section 4.2) and baseline risk assessment;
- tabulated by exceedances and distribution (Section 4.2); and
- inspected for trends by well and area graphically and statistically (Section 4.2), as warranted (e.g., Mann-Kendall analysis).

The impact of missing data, if any, will be evaluated in the context of the existing long-term sampling database to determine the need for follow up action prior to the next planned sampling event.

The need for modification of the sampling program will be evaluated based on the assessment of the attainment of the objectives.

Any proposed modifications to the sampling program will be submitted by ARC and TRC to USEPA for approval.

5.0 RECORDKEEPING AND REPORTING

5.1 Introduction

TRC will maintain the primary project file at its office in Cincinnati, Ohio.

TRC Environmental Corporation
11231 Cornell Park Drive
Cincinnati, Ohio 45242
Telephone: 513-489-2255
Fax: 513-489-2533

The project files are maintained electronically on a network server.

The public file repository is located at:

Information Repository
Prince William County Library
8601 Mathis Avenue
Manassas, Virginia 20110

5.2 Field and Monitoring Results

Records will include documentation of the following:

- Field implementation of the SAP (Sections 2.3, 2.6, and 2.7)
- Field QA/QC (Section 2.4)
- Sample transport and handling including chains of custody (Section 2.5)
- Analytical laboratory results (Section 3.0)
- Data reduction and validation (Section 4.1)
- Data evaluation (Section 4.2)
- Annual report to USEPA (Section 5.3)

Field records will be recorded on paper and/or logbooks and subsequently copied to the electronic project file. Other records will be created and maintained electronically in the project file, including reports.

5.3 Annual Report

A report documenting the annual and semi-annual sampling events will be prepared annually during the first quarter of each calendar year. The summary report will summarize the results of the preceding year's sampling events, an evaluation of progress, and also include operational details regarding ongoing active remediation. The report will be provided in the following general format.

1. Introduction
2. Objectives – summarize current objectives
3. Screening Criteria – updated as warranted
4. Ground Water Flow – shallow and deep
5. Sampling Results – shallow and deep ground water, surface water, and exceedances
6. Data Evaluation
    a. Ground Water Flow – shallow and deep
        i. Directions and gradients
        ii. Comparison to historical
        iii. Containment by NDTS
    b. Exceedances – source, performance, sentinel, and surface water, if any
    c. Trends – source, performance, sentinel, and surface water
        i. Historical review – supplemented with charts as warranted
        ii. Statistical analysis – Mann-Kendall
    d. Effectiveness of Monitoring Program – status and recommendations
        i. Adequacy of SAP
        ii. Proposed modifications
        iii. Proposed completions and well abandonment
7. NDTS Operational Summary – summarize operation and modifications, if any
8. Summary
9. References

The following summary tables will be prepared at a minimum.

1. Wells Monitored – during each event, with the analytes sampled
2. Water Levels – ground water measurements and corrected water level elevations
3. Exceedance Summary – summary of exceedances by location and event
4. Analytical Summaries – laboratory data with exceedances of screening criteria bolded
5. NDTS Operational Summaries – operational information from the calendar year

Additional tables will be provided to summarize information as warranted.

The following summary figures will be prepared at a minimum.

1. Site Location and Features
2. Ground Water Potentiometric Surface Contours – shallow and deep
3. Sampling Locations – shallow, deep, and surface water
4. Distributions of COCs – shallow, deep, and surface water;
    a. Perchlorate
    b. Selected VOCs
    c. Concentration depictions
5. Time versus Concentration Plots – focusing on COCs exceeding MCLs and screening criteria; possibly as an appendix
6. NDTS Piping and Instrumentation Diagram
7. NDTS Operational Graphs – extraction, injection, and amendment information; possibly as an appendix

The following appendices will be prepared at a minimum.

1. Analytical Laboratory Reports (on CD)
2. Data Validation Memos (on CD)
3. Other Laboratory Information – certificates, procedures, etc. (on CD)
4. Field Sampling Forms (on CD)
5. Summary Tables of Historical Data
6. Data Evaluation Backup Information – figures, graphs, charts, statistical analyses, etc.

6.0 REFERENCES

Commonwealth of Virginia, Department of Environmental Quality, 2012, Re: Thermal Treatment Facility Closure Final Report – Approval, Atlantic Research Corporation – Gainesville, Virginia, March 21, 2012.

ENVIRON International Corporation, 2012, RCRA Facility Investigation Baseline Risk Assessment, Atlantic Research Corporation – Gainesville, Virginia, November 2, 2012.

Geosyntec Consultants, 2011. Work Plan for 2011-2012 Groundwater Monitoring and Well Maintenance Activities, Atlantic Research Corporation Facility, Gainesville, Virginia, September 22, 2011.

TRC, 2014a, Ground Water Monitoring Technical Memorandum No. 1, Atlantic Research Corporation Facility, Gainesville, Virginia, March, 2014.

TRC, 2014b, Ground Water Monitoring Technical Memorandum No. 2, Atlantic Research Corporation Facility, Gainesville, Virginia, August 26, 2014.

TRC, 2015, Revised Sampling and Well Reduction Plan (RSWRP), Atlantic Research Corporation Facility, Gainesville, Virginia, April 2, 2015.

USEPA, 2008, USEPA Contract Laboratory Program National Functional Guidelines for Superfund Organic Methods Data Review, OSWER 9240.1-48, June 2008.

USEPA, 2010, USEPA Contract Laboratory Program National Functional Guidelines for Inorganic Superfund Data Review, OSWER 9240.1-51, January 2010.

FIGURES

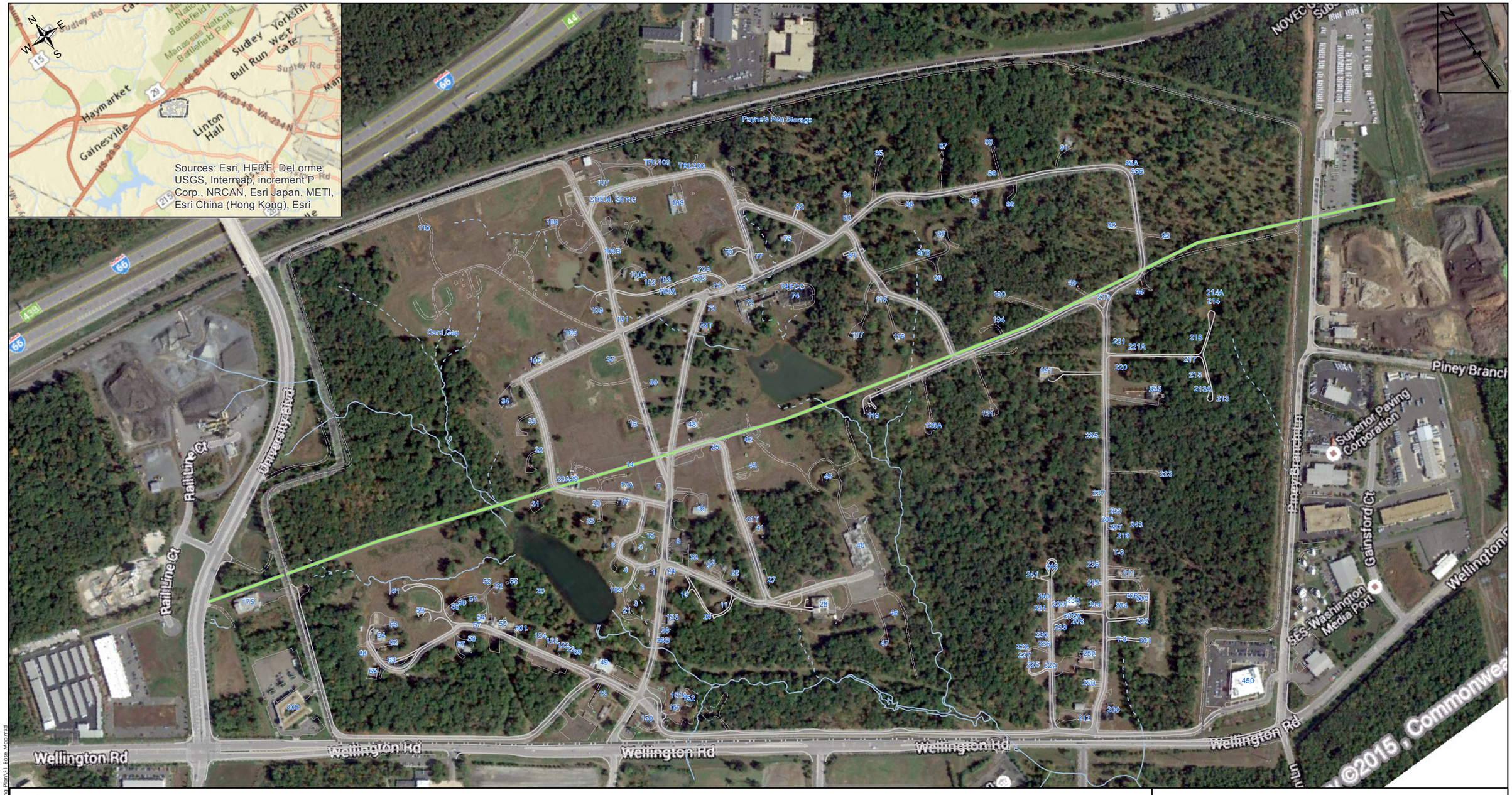

Site Features

- Site Boundary
- Paved Road
- Unpaved Road
- Pavement
- Parking
- Railroad Track
- Tank
- High Pressure Gas line
- Perennial Surface Water
- Ephemeral Surface Water

Blue labels indicate locations of current and former buildings.
Image from Google Earth 10/7/2014.

1,000 500 0 1,000 Feet

N E S W

Facilty Location and Features

Atlantic Research Corporation, Gainesville, Virginia

TRC Environmental Inc.
11231 Cornell Park Drive
Cincinnati, Ohio 45242

Project: 192457.0002

6/23/2015

Figure 1

G:\GIS Projects\GIS_SEQUA\Gainesville\MXD\201503_Sampling_Plan\F1_Base_Map.mxd

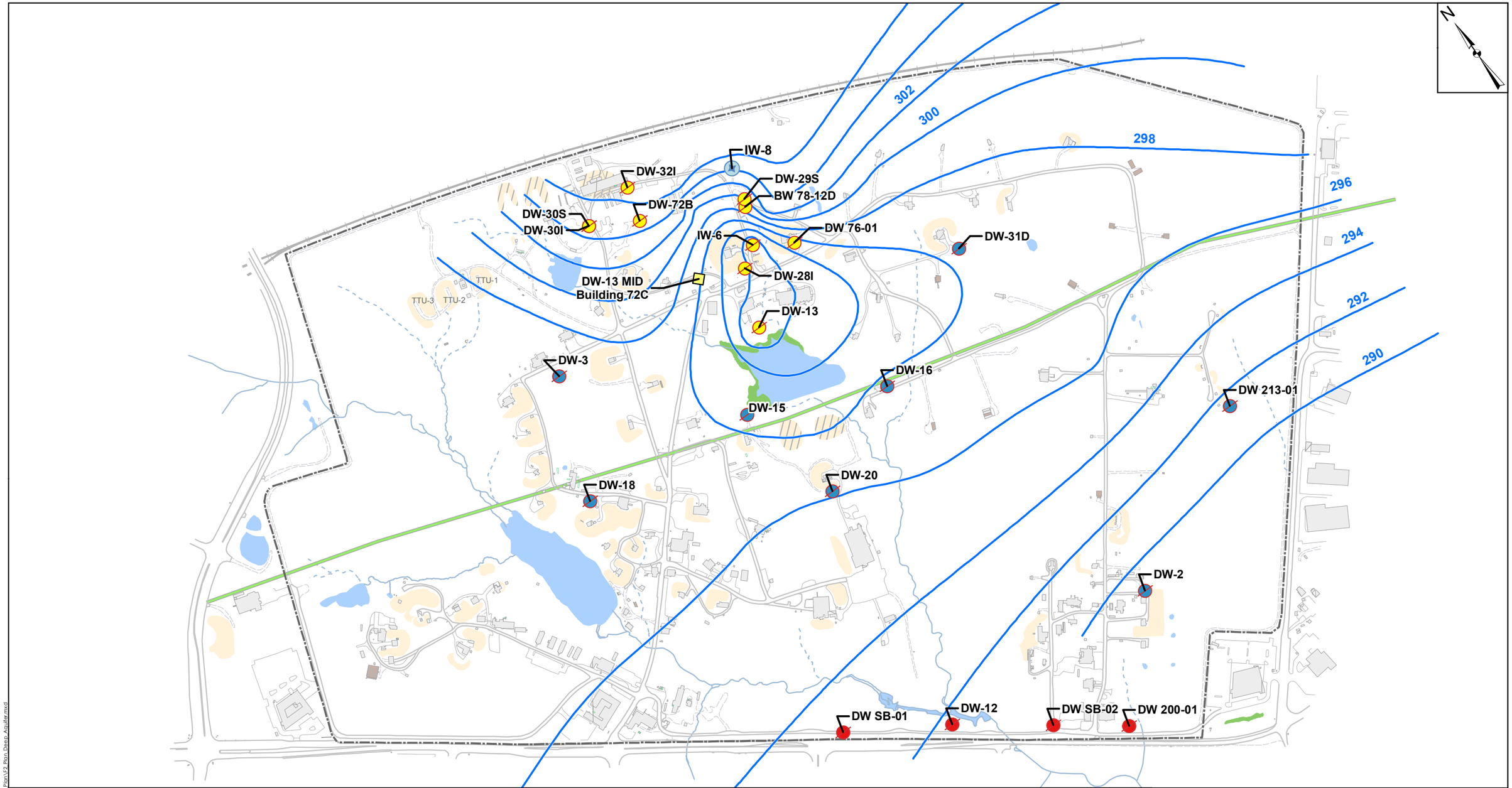

Legend

- Sentinel
- Performance
- Source
- Treatment System
- Injection Well IW-8
- Deep Aquifer Water Level Contours - June 2014 (feet)

Site Features

- Site Boundary
- Paved Road
- Unpaved Road
- Pavement
- Parking
- Railroad Track
- Tank
- Building
- Former Building
- High Pressure Gas line
- Berm
- Historic Burn Area /TTU
- Perennial Surface Water
- Ephemeral Surface Water
- Wetland
- Pond

Note:
DW-13 is the NDTS extraction well location.
DW-13 MID shows the locatoin of the above ground treatment system.
IW-8 is the injection well location.

500 250 0 500
Feet

Deep Aquifer
Ground Water Sampling Plan

Atlantic Research Corporation, Gainesville, Virginia

TRC Environmental Inc.
11231 Cornell Park Drive
Cincinnati, Ohio 45242

Figure 2

Project: 192457.0002.0000 | 6/18/2015

G:\GIS Projects\GIS_SEQUA\Gainesville\MXD\201503_Sampling Plan\F2_Plan Deep Aquifer.mxd

N

325 320 315 310 305 300 295 290 285 280 275 270 265

BW CM-01S
SW TTU-03
TTU-1 TTU-3 TTU-2
BW TTU-03D
BW TTU-05
SW 105-01
BW CG-01D
BW 79-02S
SW 74-07
SW 105-03D
SW 42-02
BW 45-03S
BW 119-01
BW 34-01
BW 14-02S
BW 31-01S
SW 5-04
BW 16-04D
SW 15-02
BW 237-01D
SW 40-07A
SW 40-57
BW 21-04D
BW 28-02S
BW 28-04D
SW 46-01
SW 47-02
SW 28-41
SW SB-01
SW SB-02
SW SB-03
SW 222-02
SW 212-01
SW 200-02

Legend

- Sentinel
- Performance
- Source
- Shallow Aquifer Water Level Contour - June 2014 (feet)

Site Features

- Site Boundary
- Paved Road
- Unpaved Road
- Pavement
- Parking
- Railroad Track
- Tank
- Building
- Former Building
- High Pressure Gas line
- Berm
- Historic Burn Area /TTU
- Perennial Surface Water
- Ephemeral Surface Water
- Wetland
- Pond

Note:

500 250 0 500
Feet

G:\GIS_Project\1\GIS_SEQUA\Gainesville\MXD\201503_Sampling Plan\V3_Plan_Shallow_Aquifer.mxd

Shallow Aquifer
Ground Water Sampling Plan

Atlantic Research Corporation, Gainesville, Virginia

TRC Environmental Inc.
11231 Cornell Park Drive
Cincinnati, Ohio 45242

Figure 3

Project: 192457.0002.0000

6/19/2015

N

TTU-1
TTU-3
TTU-2
West 01
STR 40-15
STR 04
STR 02

Legend

Surface Water

- Sentinel
- Performance
- Source

Site Features

- Site Boundary
- Paved Road
- Unpaved Road
- Pavement
- Parking
- Railroad Track
- Tank
- Building
- Former Building
- High Pressure Gas line
- Berm
- Historic Burn Area /TTU
- Perennial Surface Water
- Ephemeral Surface Water
- Wetland
- Pond

500 250 0 500 Feet

Surface Water Sampling Plan

Atlantic Research Corporation, Gainesville, Virginia

TRC Environmental Inc.
11231 Cornell Park Drive
Cincinnati, Ohio 45242

Figure 4

Project: 192457.0002.0000 | 6/18/2015

G:\GIS Projects\GIS SEQUA\Gainesville\MXD\20150303 Sampling Plan\F4 Plan SurfWater.mxd

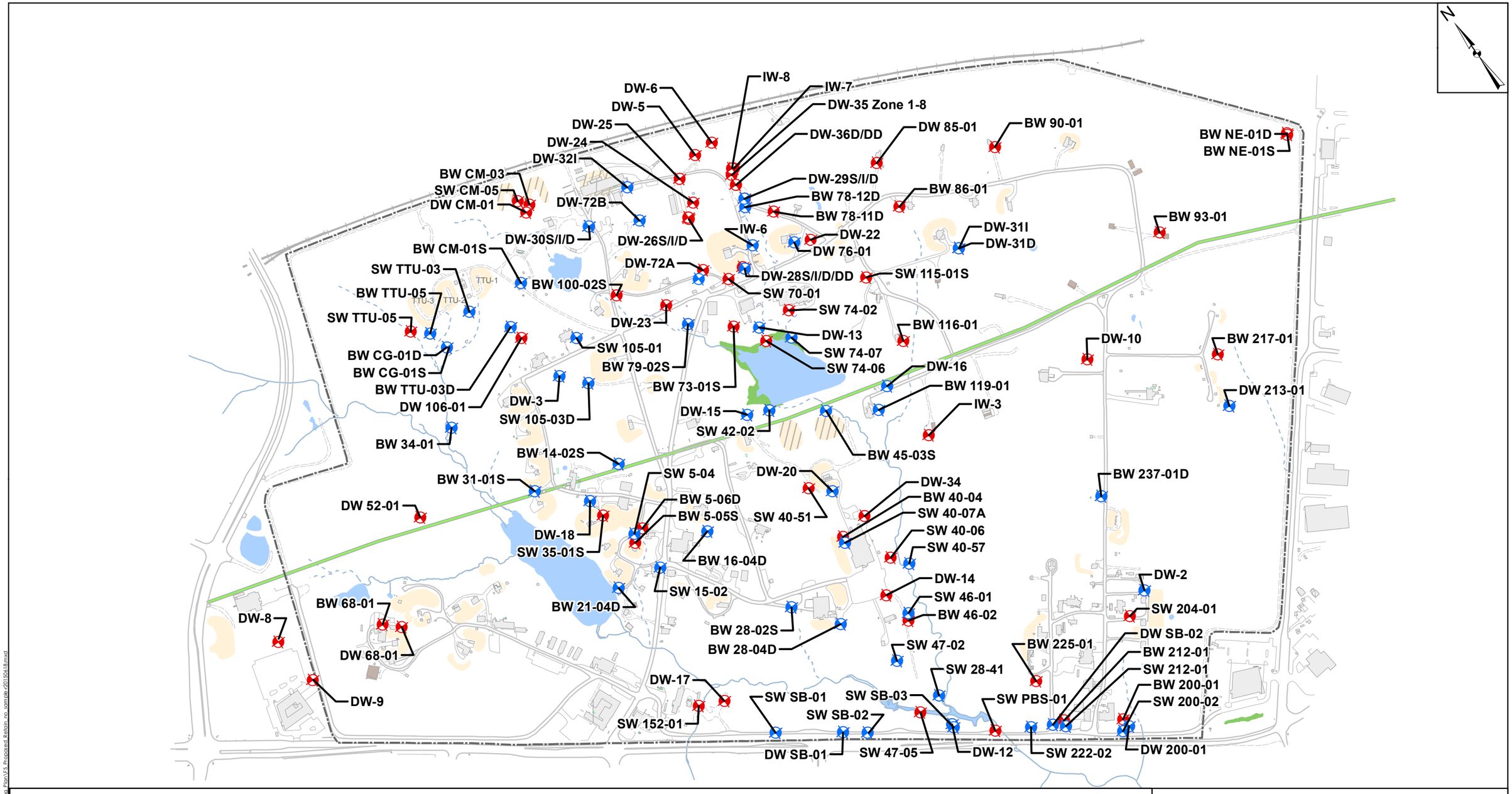

Legend

- Proposed Sampling Plan 2015
- Locations to be retained but not sampled

Site Features

- Site Boundary
- Paved Road
- Unpaved Road
- Pavement
- Parking
- Railroad Track
- Tank
- Building
- Former Building
- High Pressure Gas line
- Berm
- Historic Burn Area /TTU
- Perennial Surface Water
- Ephemeral Surface Water
- Wetland
- Pond

500 250 0 500 Feet

Well Locations To Retain

Atlantic Research Corporation, Gainesville, Virginia

TRC Environmental Inc.
11231 Cornell Park Drive
Cincinnati, Ohio 45242

Project: 192457.0002.0000

6/19/2015

Figure 5

G:\GIS_Projects\GIS_SEQUA\Gainesville\MXD_201503_Sampling Plan\F5 Proposed Retain_no_sample-20150618.mxd

TABLES

TABLE 1
GROUNDWATER SAMPLING PLAN
Atlantic Research Corporation, Gainesville, Virginia

Aquifer	Well ID	Pump Depth	Data Need	VOCs	CLO4	1,4-Dioxane
Shallow	BW 119-01	18	Performance	Annual	Annual	
Shallow	BW 14-02S	16	Performance	Annual	Annual	
Shallow	BW 16-04D	18	Performance	Annual	Annual	
Shallow	BW 21-04D	19	Performance	Annual	Annual	
Shallow	BW 237-01D	25	Performance	Annual	Annual	
Shallow	BW 28-02S	17	Source	Annual	Annual	Annual
Shallow	BW 28-04D	21	Performance	Annual	Annual	
Shallow	BW 31-01S	5	Performance	Annual	Annual	
Shallow	BW 34-01	40	Performance	Annual	Annual	
Shallow	BW 45-03S	6	Performance	Annual	Annual	
Deep	BW 78-12D	14	Source	Annual	Annual	
Shallow	BW 79-02S	10	Performance	Annual	Annual	
Shallow	BW CG-01D	32	Source	Annual	Annual	
Shallow	BW CM-01S	17	Performance	Annual	Annual	
Shallow	BW TTU-03D	20	Performance	Annual	Annual	
Shallow	BW TTU-05	23	Performance	Annual	Annual	
Deep	DW 200-01	Artesian	Sentinel	Semi-Annual	Semi-Annual	
Deep	DW 213-01	114	Performance	Annual	Annual	
Deep	DW 76-01	47	Source	Annual	Annual	Annual
Deep	DW SB-01	Artesian	Sentinel	Semi-Annual	Semi-Annual	
Deep	DW SB-02	Artesian	Sentinel	Semi-Annual	Semi-Annual	Annual
Deep	DW-12	Artesian	Sentinel	Semi-Annual	Semi-Annual	Annual
Deep	DW-13	Sample Port	NDTS Extraction	Semi-Annual	Semi-Annual	Semi-Annual
Deep	DW-13 MID	Sample Port	NDTS Midpoint	Semi-Annual		
Deep	DW-15	273	Performance	Annual	Annual	
Deep	DW-16	240	Performance	Annual	Annual	
Deep	DW-18	350	Performance	Annual	Annual	
Deep	DW-2	125	Performance	Annual	Annual	
Deep	DW-20	Artesian	Performance	Annual	Annual	Annual
Deep	DW-28I	105	Source	Annual	Annual	Annual
Deep	DW-29S	30	Source	Annual	Annual	
Deep	DW-3	340	Performance	Annual	Annual	
Deep	DW-30I	140	Source	Annual	Annual	Annual
Deep	DW-30S	35	Source	Annual	Annual	
Deep	DW-31D	255	Performance	Annual	Annual	
Deep	DW-32I	40	Source	Annual	Annual	Annual
Deep	DW-72B	206	Source	Annual	Annual	Annual
Deep	IW-6	60	Source	Annual	Annual	
Surface Water	STR 02	Grab	Sentinel	Semi-Annual	Semi-Annual	
Surface Water	STR 04	Grab	Sentinel	Semi-Annual	Semi-Annual	
Surface Water	STR 40-15	Grab	Performance	Annual	Annual	
Shallow	SW 105-01	7	Performance	Annual	Annual	
Shallow	SW 105-03D	18	Performance	Annual	Annual	
Shallow	SW 15-02	13	Source	Annual	Annual	Annual
Shallow	SW 200-02	10	Sentinel	Semi-Annual	Semi-Annual	
Shallow	SW 212-01	9	Sentinel	Semi-Annual	Semi-Annual	
Shallow	SW 222-02	5	Sentinel	Semi-Annual	Semi-Annual	Annual
Shallow	SW 28-41	8	Performance	Annual	Annual	
Shallow	SW 40-07A	11	Source	Annual	Annual	
Shallow	SW 40-57	12	Performance	Annual	Annual	
Shallow	SW 42-02	7	Performance	Annual	Annual	
Shallow	SW 46-01	11	Performance	Annual	Annual	
Shallow	SW 47-02	4	Performance	Annual	Annual	
Shallow	SW 5-04	16	Performance	Annual	Annual	
Shallow	SW 74-07	7	Performance	Annual	Annual	
Shallow	SW SB-01	11	Sentinel	Semi-Annual	Semi-Annual	
Shallow	SW SB-02	11	Sentinel	Semi-Annual	Semi-Annual	
Shallow	SW SB-03	11	Sentinel	Semi-Annual	Semi-Annual	Annual
Shallow	SW TTU-03	3	Performance	Annual	Annual	
Surface Water	West 01	Grab	Source / TTF Area	Annual	Annual	

Notes
Field parameter will be collected each time a well is sampled.
Field parameters include temperature, pH, ORP, DO, conductivity, and water levels.
Pump Depth in feet below ground surface.
DW-13 may also be sampled for other constituents not listed to support operation and evaluation of the northern deep groundwater treatment system (NDTS)
Sampling Frequency: Semi-Annual - twice a year; Annual - once a year;
ClO4 - perchlorate; VOCs - volatile organic compounds

TABLE 2
LOCATIONS TO RETAIN
Atlantic Research Corporation, Gainesville, Virginia

Location	Aquifer Designation	Sampling Plan (See Table 1)	Water Levels Annually	Mainteance Annually	Easting	Northing
BW 100-02S	Shallow		✓	✓	11745025.22	6973400.064
BW 116-01	Shallow		✓	✓	11746147.16	6972275.599
BW 119-01	Shallow	✓	✓	✓	11745816.5	6972048.897
BW 14-02S	Shallow	✓	✓	✓	11744492.58	6972647.172
BW 16-04D	Shallow	✓	✓	✓	11744668.34	6972063.999
BW 200-01	Shallow		✓	✓	11745903.6	6969896.745
BW 21-04D	Shallow	✓	✓	✓	11744093.23	6972097.55
BW 212-01	Shallow		✓	✓	11745637.98	6970082.136
BW 217-01	Shallow		✓	✓	11747494.7	6971205.526
BW 225-01	Shallow		✓	✓	11745641.35	6970344.645
BW 237-01D	Shallow	✓	✓	✓	11746522.67	6970952.734
BW 28-02S	Shallow	✓	✓	✓	11744795.19	6971455.766
BW 28-04D	Shallow	✓	✓	✓	11744960.55	6971224.892
BW 31-01S	Shallow	✓	✓	✓	11744034.11	6972794.304
BW 34-01	Shallow	✓	✓	✓	11743870.8	6973342.619
BW 40-04	Shallow		✓	✓	11745250.09	6971603.06
BW 45-03S	Shallow	✓	✓	✓	11745580.97	6972216.06
BW 46-02	Shallow		✓	✓	11745270.78	6971023.246
BW 5-05S	Shallow		✓	✓	11744311.69	6972244.101
BW 5-06D	Shallow		✓	✓	11744390.21	6972285.747
BW 68-01	Deep		✓	✓	11742932.77	6972695.433
BW 73-01S	Shallow		✓	✓	11745442.44	6972883.815
BW 78-11D	Deep		✓	✓	11745988.87	6973264.482
BW 78-12D	Deep	✓	✓	✓	11745876.1	6973376.24
BW 79-02S	Shallow	✓	✓	✓	11745246.71	6973041.17
BW 86-01	Shallow		✓	✓	11746560.68	6972881.423
BW 90-01	Deep		✓	✓	11747174.46	6972838.878
BW 93-01	Shallow		✓	✓	11747628.49	6971930.659

TABLE 2
LOCATIONS TO RETAIN
Atlantic Research Corporation, Gainesville, Virginia

Location	Aquifer Designation	Sampling Plan (See Table 1)	Water Levels Annually	Mainteance Annually	Easting	Northing
BW CG-01D	Shallow	✓	✓	✓	11744107.41	6973714.55
BW CM-01S	Shallow	✓	✓	✓	11744642.37	6973759.035
BW CM-03	Deep		✓	✓	11744931.61	6974081.002
BW NE-01D	Deep		✓	✓	11748511.4	6971963.168
BW NE-01S	Shallow		✓	✓	11748507.29	6971953.256
BW TTU-03D	Shallow	✓	✓	✓	11744454.7	6973599.351
BW TTU-05	Shallow	✓	✓	✓	11744079.24	6973828.885
DW 106-01	Deep		✓	✓	11744466.61	6973516.638
DW 200-01	Deep	✓	✓	✓	11745907.02	6969848.603
DW 213-01	Deep	✓	✓	✓	11747380.12	6970939.555
DW 52-01	Deep		✓	✓	11743443.86	6973048.222
DW 68-01	Deep		✓	✓	11743008.72	6972623.61
DW 76-01	Deep	✓	✓	✓	11745980.56	6973060.857
DW 85-01	Deep		✓	✓	11746600.23	6973147.652
DW CM-01	Deep		✓	✓	11744892.67	6974056.636
DW SB-01	Deep	✓	✓	✓	11744622.12	6970739.074
DW SB-02	Deep	✓	✓	✓	11745574.86	6970096.341
DW-10	Deep		✓	✓	11746900.44	6971602.037
DW-12	Deep	✓	✓	✓	11745130.6	6970423.686
DW-13	Deep	✓	✓	✓	11745552.77	6972798.868
DW-13 MID	Deep	✓	✓	✓	Treatment Bldg.	Treatment Bldg.
DW-14	Deep		✓	✓	11745255.4	6971206.169
DW-15	Deep	✓	✓	✓	11745218.89	6972452.084
DW-16	Deep	✓	✓	✓	11745929.01	6972128.335
DW-17	Deep		✓	✓	11744198.06	6971258.127
DW-18	Deep	✓	✓	✓	11744246.68	6972574.935
DW-2	Deep	✓	✓	✓	11746412.12	6970396.331
DW-20	Deep	✓	✓	✓	11745349.92	6971840.093
DW-22	Deep		✓	✓	11746061.64	6973022.547

TABLE 2
LOCATIONS TO RETAIN
Atlantic Research Corporation, Gainesville, Virginia

Location	Aquifer Designation	Sampling Plan (See Table 1)	Water Levels Annually	Mainteance Annually	Easting	Northing
DW-23	Deep		✓	✓	11745211.96	6973195.945
DW-24	Deep		✓	✓	11745662.8	6973563.028
DW-25	Deep		✓	✓	11745677.62	6973710.239
DW-26D	Deep		✓	✓	11745588.95	6973503.21
DW-26I	Deep		✓	✓	11745593.67	6973512.307
DW-26S	Deep		✓	✓	11745593.56	6973512.455
DW-28D	Deep		✓	✓	11745678.27	6973104.688
DW-28DD	Deep		✓	✓	11745672.79	6973117.475
DW-28I	Deep	✓	✓	✓	11745678.33	6973104.87
DW-28S	Deep		✓	✓	11745678.52	6973104.852
DW-29D	Deep		✓	✓	11745900.71	6973414.062
DW-29I	Deep		✓	✓	11745900.81	6973414.242
DW-29S	Deep	✓	✓	✓	11745900.67	6973414.138
DW-3	Deep	✓	✓	✓	11744511.65	6973224.745
DW-30D	Deep		✓	✓	11745123.96	6973794.136
DW-30I	Deep	✓	✓	✓	11745124.18	6973793.93
DW-30S	Deep	✓	✓	✓	11745124.29	6973794.164
DW-31D	Deep	✓	✓	✓	11746689.41	6972505.973
DW-31I	Shallow		✓	✓	11746689.28	6972505.995
DW-32I	Deep	✓	✓	✓	11745419.58	6973840.697
DW-34	Deep		✓	✓	11745410.57	6971625.474
DW-35 Zones 1-8	Deep		✓	✓	11745920.37	6973560.644
DW-36D	Deep		✓	✓	11745908.21	6973502.133
DW-36DD	Deep		✓	✓	11745908.21	6973502.133
DW-5	Deep		✓	✓	11745823.92	6973766.448
DW-6	Deep		✓	✓	11745936.42	6973767.673
DW-72A	Deep		✓	✓	11745487.97	6973230.694
DW-72B	Deep	✓	✓	✓	11745365.84	6973654.521
DW-8	Deep				11742415.9	6972952.074

TABLE 2
LOCATIONS TO RETAIN
Atlantic Research Corporation, Gainesville, Virginia

Location	Aquifer Designation	Sampling Plan (See Table 1)	Water Levels Annually	Mainteance Annually	Easting	Northing
DW-9	Deep				11742445.35	6972674.439
East 01	Surface Water		✓	✓	11747490.56	6970550.614
IW-3	Deep		✓	✓	11745955.38	6971777.079
IW-6	Deep	✓	✓	✓	11745788.1	6973183.733
IW-7	Deep		✓	✓	11745952.19	6973583.312
IW-8	Deep		✓	✓	11745943.59	6973588.22
STR 02	Surface Water	✓	✓	✓	11745156.65	6970478.229
STR 04	Surface Water	✓	✓	✓	11744664.13	6971040.896
STR 06	Surface Water		✓	✓	11744166.85	6971335.305
STR 40-15	Surface Water	✓	✓	✓	11745474.15	6971421.777
STR 40-25	Surface Water		✓	✓	11745859.75	6971984.913
STR 40-27	Surface Water		✓	✓	11746135.95	6972191.341
STRA 07	Surface Water		✓	✓	11744127.66	6971525.118
SW 105-01	Shallow	✓	✓	✓	11744710.89	6973339.172
SW 105-03D	Shallow	✓	✓	✓	11744618.06	6973100.201
SW 115-01S	Shallow		✓	✓	11746184.98	6972676.164
SW 15-02	Shallow	✓	✓	✓	11744344.35	6972054.977
SW 152-01	Shallow		✓	✓	11744069.82	6971320.804
SW 200-02	Shallow	✓	✓	✓	11745864.91	6969844.119
SW 204-01	Shallow		✓	✓	11746264.9	6970330.571
SW 212-01	Shallow	✓	✓	✓	11745628.69	6970050.825
SW 222-02	Shallow	✓	✓	✓	11745471.1	6970157.56
SW 28-41	Shallow	✓	✓	✓	11745165.28	6970593.553
SW 35-01S	Shallow		✓	✓	11744258.47	6972468.002
SW 40-06	Shallow		✓	✓	11745394.29	6971356.798
SW 40-07A	Shallow	✓	✓	✓	11745240.26	6971569.379
SW 40-51	Shallow		✓	✓	11745253.94	6971926.681
SW 40-57	Shallow	✓	✓	✓	11745458.5	6971273.179
SW 42-02	Shallow	✓	✓	✓	11745330.37	6972399.63

TABLE 2
LOCATIONS TO RETAIN
Atlantic Research Corporation, Gainesville, Virginia

Location	Aquifer Designation	Sampling Plan (See Table 1)	Water Levels Annually	Mainteance Annually	Easting	Northing
SW 46-01	Shallow	✓	✓	✓	11745295.72	6971055.932
SW 47-02	Shallow	✓	✓	✓	11745091.33	6970880.229
SW 47-05	Shallow		✓	✓	11745028.14	6970579.056
SW 5-04	Shallow	✓	✓	✓	11744338.01	6972287.943
SW 70-01	Shallow		✓	✓	11745572.57	6973111.624
SW 74-02	Shallow		✓	✓	11745738.27	6972778.318
SW 74-06	Shallow		✓	✓	11745539.67	6972715.876
SW 74-07	Shallow	✓	✓	✓	11745661.8	6972650.032
SW CM-05	Shallow		✓	✓	11744891.44	6974131.579
SW PBS-01	Shallow		✓	✓	11745301.09	6970257.29
SW SB-01	Shallow	✓	✓	✓	11744322.8	6970953.626
SW SB-02	Shallow	✓	✓	✓	11744729.79	6970658.737
SW SB-03	Shallow	✓	✓	✓	11745128.26	6970406.514
SW TTU-03	Shallow	✓	✓	✓	11744320.6	6973797.622
SW TTU-05	Shallow		✓	✓	11743996.97	6973899.487
West 01	Surface Water	✓	✓	✓	11743995.42	6973623.757

APPENDIX I

BORING LOGS AND WELL CONSTRUCTION DIAGRAMS

Geosyntec consultants

Borehole No. BW 119-01

Borehole / Well Construction Log

Project No.:	TR0265A	**Location:**	Gainesville, Virginia
Client:	ARC Gainesville	**Coordinates:**	N 6,972,049 E 11,745,817
Logged By:	E. Jensen / M. Hansen	**Borehole Diameter:**	10-inch / 6-inch
Reviewed By:	E. Jensen	**Site Datum:**	NAD1983 StatePlane Virginia N FIPS 4501 ft
Driller:	Eichelbergers, Inc.	**Ground Surface Elevation:**	292 ft amsl
Drilling Method:	Air Rotary	**Top PVC Casing Elevation:**	295 ft amsl
Well Material:	PVC	**Start Date - End Date:**	17 April 2008 - 17 April 2008

Depth (feet)	Stratigraphy	Lithologic Description	Drilling Information: Drilling Notes	Time	Drilling Rate (ft/min)
0		Overburden		12:23 PM	NA
		DIABASE, weathered	Set casing 3-ft bgs	12:25 PM	1.50
5		Competent		12:26 PM	4.00
		Small fracture	No apparent flow	12:28 PM	1.00
10		Semi-competent		12:30 PM	1.50
15		Water-bearing fracture zone (17' - 18.5')	No apparent flow	12:39 PM	0.56
20					
25		Borehole depth 25.0 ft			

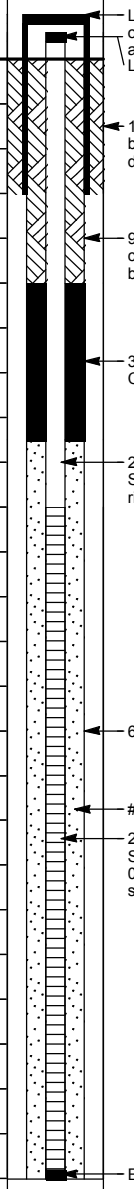

MASTER WELL CONSTRUCTION LOG PWS TR0265A ARC GAINESVILLE PWS.GPJ GEOSNTEC.GDT 6/19/09

Log of Boring: BW 14-02

Date Started:	10/14/04
Date Completed:	10/14/04
Total Depth (ft):	30.00
Boring Diameter (in):	8
Bedrock Depth (ft):	20
Elevation (ft-msl):	N/A
Remark:	

Project Code:	1040A
Project Name:	ARC - Gainesville
Drilled By:	Bedford Well Drilling
Logged By:	Jason Thomas
Drill Rig:	Ingersoll Rand TW-3
Drill Method:	Air Rotary
Sampling Method:	Split Spoon

Depth	Sample Number	Sample Interval	Recovery (inches)	Blow Counts	PID Units	Lithological Description	Interpreted Lithology	Well Construction	Comments
0	1		24		0.0	CL: Brown sandy clay, dry, no odor			Background air 0.0. PID breathing zone 0.0. Collect soil sample for VOC and perchlorate analysis. Grout 2.5' to grade. Set stick up cover. bentonite 8.5' - 2.5'
-5									
-10					0.0	SAPROLITE: Brown saprolite, dry, no odor. Water at 20'			#2 sand 21' - 8.5' 2" Riser 10.5' to +2.5' 2" #10 slot screen 20.5' - 10.5'
-15									
-20					0.0	DIABASE: Black diabase, wet, no odor			bentonite 22.5' - 21' #2 sand 30' - 22.5' 2" Riser 23' to +2.5' 2" #10 slot screen 30' - 23'
-25									
-30									

Log of Boring: BW 16-04

Date Started:	10/13/2004
Date Completed:	10/13/2004
Total Depth (ft):	22.50
Boring Diameter (in):	8
Bedrock Depth (ft):	16
Elevation (ft-msl):	N/A
Remark:	

Project Code:	1040A
Project Name:	ARC - Gainesville
Drilled By:	Bedford Well Drilling
Logged By:	Andrew Applebaum
Drill Rig:	Ingersoll-Rand T-3W
Drill Method:	Air rotary
Sampling Method:	Split spoon

Depth	Sample Number	Sample Interval	Recovery (inches)	Blow Counts	PID Units	Lithological Description	Interpreted Lithology	Well Construction	Comments
0	1		16		164	CL: Brown silty clay into weathered bedrock.			Background air - 0.0. PID Breathing Zone - 0.0. Collect soil sample for VOC and perchlorate analysis from 0'-2'. Set protective stick-up cover. Cement 2.5'-grade. Bentonite 3'-2.5'. #2 sand 9.5'-3'. 0.01" slot screen 9.5'-3.5'. Casing to +2.5'. Set shallow well at 9.5'. #2 sand 10'-9.5'. Bentonite 11.5'-10'. #2 sand 22.5'-11.5'. 0.01" slot screen 22.5'-12.5'. Casing to +2.5'. Set deep well at 22.5'.
					76.3	SAPROLITE: Saprolite, brown to gray coloration alternating with depth, moist to 8.5'.			
-5									
-10									
-15					49.6	SAPROLITE: Water zone, approx. 3 gpm.			
						DIABASE: Gray diabase, variable soft and hard zones.			
-20									

Log of Boring: BW 21-04

Date Started:	10/12/04
Date Completed:	10/12/04
Total Depth (ft):	21.00
Boring Diameter (in):	8
Bedrock Depth (ft):	9
Elevation (ft-msl):	N/A
Remark:	

Project Code:	1040A
Project Name:	ARC - Gainesville
Drilled By:	Bedford Well Drilling
Logged By:	Jason Thomas
Drill Rig:	Reich Drill T650-WII
Drill Method:	Air Rotary
Sampling Method:	Split Spoon

Depth	Sample Number	Sample Interval	Recovery (inches)	Blow Counts	PID Units	Lithological Description	Interpreted Lithology	Well Construction	Comments
0	1		24		3.1	CL: Brown sandy clay, dry, no odor.			Background air 0.0. PID breathing zone 0.0. Collect soil sample for VOC and perchlorate analysis. Grout 2.5' to grade. Set stick up cover.
-5					0.0	SAPROLITE: Black weathered diabase, dry, no odor			bentonite 3.5' - 2.5' #2 sand 12.5' - 3.5' 2" Riser 4' to +2.5' 2" #10 slot screen 12.5' - 4'
-10					0.0	DIABASE: Solid diabase, black, dry, no odor. Water @ 9' (1/2 gpm)			bentonite 15.5' - 12.5'
-15									#2 sand 21' - 15.5' 2" Riser 16' to +2.5' 2" #10 slot screen 21' - 16'
-20									

Log of Boring: BW 237-01D

Date Started: 04/17/06
Date Completed: 04/17/06
Total Depth (ft): 29.00
Boring Diameter (in): 6
Bedrock Depth (ft): 21
Elevation (ft-msl): N/A
Remark:

Project Code: 1040A
Project Name: ARC - Gainesville
Drilled By: Northern VA Drilling
Logged By: Jason Thomas
Drill Rig: Gill Beatle
Drill Method: Air rotary hammer
Sampling Method: N/A

Depth	Sample Number	Sample Interval	Recovery (Inches)	Blow Counts	PID Units	Lithological Description	Interpreted Lithology	Well Construction	Comments
0					0.0	CH: Clay, brown, dry, no odor, water at 5'.			
-5									
-10					0.0	SAPROLITE: brown, wet, no odor.			
-15									
-20					0.0	DIABASE: wet, black, no odor, fracture at 25' (2 gpm).			
-25									
-30									

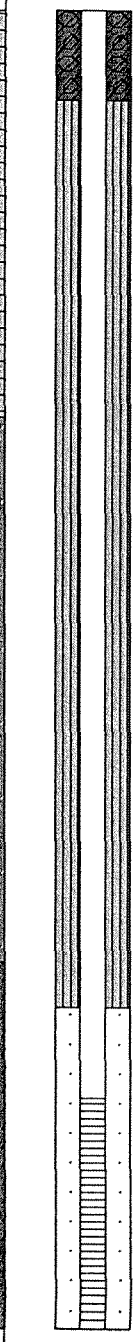

Log of Boring: BW 28-02

Date Started: 6/15/2005
Date Completed: 6/15/2005
Total Depth (ft): 35.00
Boring Diameter (in): 8
Bedrock Depth (ft): 22
Elevation (ft-msl): N/A
Remark:

Project Code: 1040A
Project Name: ARC - Gainesville
Drilled By: Bedford Well Drilling
Logged By: Jason Early
Drill Rig: Reich Drill T-650WII
Drill Method: Air rotary
Sampling Method: N/A

Depth	Sample Number	Sample Interval	Recovery (inches)	Blow Counts	PID Units	Lithological Description	Interpreted Lithology	Well Construction	Comments
0					0.P	ASPHALT			Breathing zone PID 0.0.
						SM: Brown sandy silt, some rock fragments (fill), dry, no odor.			
-5					0.0	SAPROLITE: Brown saprolite (weathered diabase), dry, no odor.			
-10									Set shallow well at 22' with screen 22'-12', casing 12'-surface.
-15									Backfilled with #2 sand 35'-28', bentonite 28'-22.5', #2 sand 22.5'-10', bentonite 10'-2', cement 2'-surface.
-20						SAPROLITE: Saturated at 21'.			
					0.0	DIABASE: Dark gray diabase bedrock, dry, no odor.			
-25									
-30									Set deep well at 35' with screen 30'-35', casing 30'-surface.
					0.0	DIABASE: Mineral vein (soft) at 31'-32', possible fracture.			
-35									

Log of Boring: BW 28-04

Date Started: 09/28/05
Date Completed: 09/28/05
Total Depth (ft): 25.00
Boring Diameter (in): 8
Bedrock Depth (ft): 14
Elevation (ft-msl): N/A
Remark:

Project Code: 1040A
Project Name: ARC - Gainesville
Drilled By: Northern VA Drilling
Logged By: Jason Early
Drill Rig: Gill Beetle 140S/4D
Drill Method: Air rotary
Sampling Method: N/A

Depth	Sample Number	Sample Interval	Recovery (inches)	Blow Counts	PID Units	Lithological Description	Interpreted Lithology	Well Construction	Comments
0						OH: Topsoil.			Breathing zone PID 0.0.
					0.0	ML: Brown clayey silt, some sand, dry, no odor.			Set deep well at 25' with 8' of screen and 20' of riser. Set shallow well at 14' with 10' of screen and 7' of riser, bottom caps, locking well plugs.
-5					0.0	SAPROLITE: Brown to dark brown saprolite, soft, dry, no odor, wet at 12'.			Annulus: #2 sand 25'-16', bentonite 16'-14', #2 sand 14'-3', bentonite 3'-2', cement grout 2'-grade, protective steel stickup.
-10									
-15					0.0	DIABASE: Dark gray to black diabase bedrock, hard, dry, no odor, fracture at 19'.			
-20					0.0				
-25									

Log of Boring: BW 31-01

Date Started: 09/14/05
Date Completed: 09/14/05
Total Depth (ft): 18.00
Boring Diameter (in): 8
Bedrock Depth (ft): 5
Elevation (ft-msl): N/A
Remark:

Project Code: 1040A
Project Name: ARC - Gainesville
Drilled By: Bedford Well Drilling
Logged By: Andrew Applebaum
Drill Rig: Ingersol Rand T3W
Drill Method: Air Rotary
Sampling Method: N/A

Depth	Sample Number	Sample Interval	Recovery (inches)	Blow Counts	PID Units	Lithological Description	Interpreted Lithology	Well Construction	Comments
0						OL: Grass, topsoil, roots CL: Brown silty clay, some rock fragments; dry to moist.			PID - Unable to calibrate due to high humidity (false positives). Cement 2'-grade. Set stick-up cover. Bentonite: 3'-2' #2 sand 5.5'-3'
-5						SAPROLITE: Wet at 4.5'. DIABASE: Black diabase rock; hard drilling. Seam 12'-13', increased water. Slightly harder drilling at 17', returns to harder drilling quickly.			Set shallow 2" PVC sch 40 well at 5.5'. 2'(0.01" slot) screen. #2 sand 6'-5.5' Bentonite: 11'-6'
-10									#2 sand 17'-11'
-15									Set deep 2" PVC sch 40 well at 17'. 5' (0.01" slot) screen. #2 sand 18'-17'

Geosyntec consultants

Borehole No. BW 34-01

Borehole / Well Construction Log

Project No.:	TR0265A	**Location:**	Gainesville, Virginia
Client:	ARC Gainesville	**Coordinates:**	N 6,973,343 E 11,743,871
Logged By:	L. Morales	**Borehole Diameter:**	10-inch / 6-inch
Reviewed By:	E. Jensen	**Site Datum:**	NAD1983 StatePlane Virginia N FIPS 4501 ft
Driller:	Eichelbergers, Inc.	**Ground Surface Elevation:**	309 ft amsl
Drilling Method:	Air Rotary	**Top PVC Casing Elevation:**	310 ft amsl
Well Material:	Open Borehole	**Start Date - End Date:**	17 June 2008 - 17 June 2008

Depth (feet)	Stratigraphy	Lithologic Description	Drilling Information: Drilling Notes	Time	Drilling Rate (ft/min)	Depth (feet)	Well Configuration	Comments
0		SILT (ML), some very fine grained sand, wet		11:50 AM	NA	0		Lockable aluminum outer casing (1.5-ft ags)
5		DIABASE, dry, fine grained	Set casing 4-ft bgs	11:53 AM 11:57 AM 12:45 PM	1.17 0.12 0.25	5		10-inch diameter boring / 6-inch diameter steel casing 95% Portland Type I/II cement - 5% granular bentonite
10				02:30 PM	0.06	10		
15						15		
20				02:48 PM	0.39	20		
25						25		
30		Soft zone		03:10 PM 03:18 PM	0.36 0.38	30		
35				03:28 PM 03:36 PM	0.30 0.37	35		
40		Damp, minor fracture Dry	<0.3 gpm	03:43 PM 03:47 PM	0.32 0.19	40		6-inch diameter boring
45		Soft zone				45		
50				04:17 PM	0.40	50		Open borehole
55						55		
60						60		
65				04:54 PM	0.32	65		
70				05:10 PM	0.38	70		
75						75		
80						80		
85						85		
90						90		
95						95		Slough
100		Borehole depth 98.0 ft		06:40 PM	0.32	100		
105						105		
110						110		
115						115		

MASTER WELL CONSTRUCTION LOG PWS TR0265A ARC GAINESVILLE PWS.GPJ GEOSNTEC.GDT 6/19/09

Log of Boring: BW 45-03

Date Started: 09/27/05
Date Completed: 09/27/05
Total Depth (ft): 21.50
Boring Diameter (in): 8
Bedrock Depth (ft): 8
Elevation (ft-msl): N/A
Remark:

Project Code: 1040A
Project Name: ARC - Gainesville
Drilled By: Northern VA Drilling
Logged By: Jason Early
Drill Rig: Gill-Beetle 140S/4D
Drill Method: Air rotary
Sampling Method: N/A

Depth	Sample Number	Sample Interval	Recovery (inches)	Blow Counts	PID Units	Lithological Description	Interpreted Lithology	Well Construction	Comments
0						OH: Topsoil.			Breathing zone PID 0.0.
					0.0	ML: Brown sandy silt, some clay, dry, no odor.			Set deep well at 21.5' with 10' of screen, 14.5' of casing. Set shallow well at 8' with 5 of screen, 6' of riser, bottom caps, locking well plugs. Annulus: #2 sand 21.5'-10', bentonite 10'-8', #2 sand 8'-2', cement grout 2'-grade, protective steel cover.
-5					0.0	SAPROLITE: Dark brown saprolite, moist, no odor.			
					0.0	DIABASE: Dark gray to black diabase bedrock,dry, hard, no odor.			
-10									
					0.8				
-15					0.0				
-20									

Log of Boring: BW 78-12

Date Started:	9/27/2004
Date Completed:	9/27/2004
Total Depth (ft):	16.00
Boring Diameter (in):	8
Bedrock Depth (ft):	1
Elevation (ft-msl):	N/A
Remark:	

Project Code:	1040A
Project Name:	ARC - Gainesville
Drilled By:	Bedford Well Drilling
Logged By:	Andrew Applebaum
Drill Rig:	Ingersoll Rand T3W
Drill Method:	Air rotary
Sampling Method:	Split spoon

Depth	Sample Number	Sample Interval	Recovery (inches)	Blow Counts	PID Units	Lithological Description	Interpreted Lithology	Well Construction	Comments
0	1		11		194 22.6	CL: Brown silty clay, some grass roots, damp to moist. METASEDIMENT: Red brown metasediment, soft. Hard drilling 6' to 12'. Wet at 4' and 12'.			Background air PID - 0.0 Soil cuttings PID - 0.0 Soil sample bag PID - 194 Sample collected for VOCs and perchlorate analysis above metasediment. Cement 2.5'-grade, set stick-up. Bentonite 3'-2.5'. #2 sand 7.5'-3'. Set 2" schedule 40 PVC 0.01" slot screen 7.5'-3.5', casing to +2.5'. #2 sand 8'-7.5'. Bentonite 10'-8'. #2 sand 16'-10'. Set 2" schedule 40 PVC 0.01" slot screen 16'-11', casing to +2.5'.
-5									
-10									
-15									

Log of Boring: BW 79-02

Date Started: 09/13/05
Date Completed: 09/13/05
Total Depth (ft): 31.00
Boring Diameter (in): 8
Bedrock Depth (ft): 16
Elevation (ft-msl): N/A
Remark:

Project Code: 1040A
Project Name: ARC - Gainesville
Drilled By: Bedford Well Drilling
Logged By: Andrew Applebaum
Drill Rig: Ingersol Rand T3W
Drill Method: Air Rotary
Sampling Method: N/A

Depth	Sample Number	Sample Interval	Recovery (inches)	Blow Counts	PID Units	Lithological Description	Interpreted Lithology	Well Construction	Comments
0					0.0	OL: Grass, gravel, roots.			Background Air - 0.0 PID
						CL: Brown silty clay coarse to fine sand mixed with gravel.			Cement: 3' to grade. Set stick-up cover.
									Bentonite: 4'-3'.
-5									#2 sand 15'-4'.
-10									
-15						SAPROLITE: Brown.			Set shallow 2" sch 40 PVC well at 15'. 11' (0.01" slot) screen.
					0.0	DIABASE: Black diabase hard drilling - no fractures, or water.			#2 sand 16'-15'.
									Bentonite: 21'-16'.
-20									#2 sand 31'-21'.
-25									
-30									Set deep 2" sch 40 PVC well at 31'. 9' (0.01" slot) screen.
					0.0				

Log of Boring: BW CG-01D

Date Started: 04/13/06
Date Completed: 04/13/06
Total Depth (ft): 37.00
Boring Diameter (in): 6
Bedrock Depth (ft): 23
Elevation (ft-msl): N/A
Remark:

Project Code: 1040A
Project Name: ARC - Gainesville
Drilled By: Northern VA Drilling
Logged By: Jason Thomas
Drill Rig: Gill Beatle
Drill Method: Air rotary hammer
Sampling Method: N/A

Depth	Sample Number	Sample Interval	Recovery (inches)	Blow Counts	PID Units	Lithological Description	Interpreted Lithology	Well Construction	Comments
0					2.3	ML: Sandy silt, brown, dry, no odor.			Breathing zone PID 3.6.
-5					71	SAPROLITE: moist, brown/orange, water at 18'.			
-10									
-15									
-20									
-25					3.6	DIABASE: black, no odor, wet, soft at 34' and 36'.			
-30									
-35									

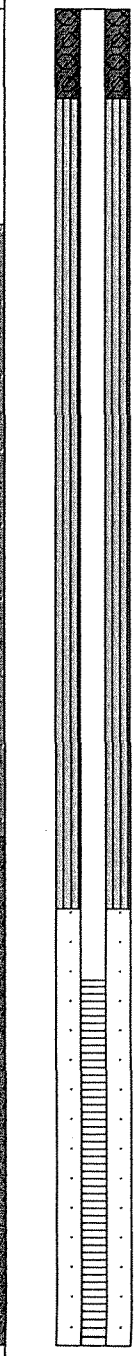

Log of Boring: BW CM-01

Date Started: 6/15/2005
Date Completed: 6/15/2005
Total Depth (ft): 34.00
Boring Diameter (in): 8
Bedrock Depth (ft): 22
Elevation (ft-msl): N/A
Remark:

Project Code: 1040A
Project Name: ARC - Gainesville
Drilled By: Bedford Well Drilling
Logged By: Jason Early
Drill Rig: Reich Drill T-650WII
Drill Method: Air rotary
Sampling Method: N/A

Depth	Sample Number	Sample Interval	Recovery (inches)	Blow Counts	PID Units	Lithological Description	Interpreted Lithology	Well Construction	Comments
0					0.0	OL: Topsoil.			Breathing zone PID 0.0.
						ML: brown clayey silt,dry, no odor.			
-5									
					0.0	SAPROLITE: Brown saprolite (weathered diabase), dry, no odor. Wet at 21'.			
-10									Set shallow well at 22' with screen 22'-12', casing 12'-surface with stickup.
-15									Backfilled with #2 sand 34'-27', bentonite 27'-22.5', #2 sand 22.5'-10', bentonite 10'-2', cement 2'-surface with protective stickup cap.
-20					0.0	DIABASE: Dark gray to black diabase bedrock, dry, no odor. Soft at top, harder with depth.			
-25					0.0				
-30						DIABASE: Soft zone at 32', possible fracture.			Set deep well at 34' with screen 34'-29', casing 29'-surface with stickup.

Log of Boring: BW TTU-03

Date Started: 09/13/05
Date Completed: 09/13/05
Total Depth (ft): 22.00
Boring Diameter (in): 8
Bedrock Depth (ft): 12
Elevation (ft-msl): N/A
Remark:

Project Code: 1040A
Project Name: ARC - Gainesville
Drilled By: Bedford Well Drilling
Logged By: Andrew Applebaum
Drill Rig: Ingersol Rand T3W
Drill Method: Air Rotary
Sampling Method: N/A

Depth	Sample Number	Sample Interval	Recovery (inches)	Blow Counts	PID Units	Lithological Description	Interpreted Lithology	Well Construction	Comments
0					0.0	OL: Grass, topsoil, roots.			Background Air - 0.0 PID
						CL: Brown silty clay, some wood pieces, rocks. Grades to green brown silty clay- damp to moist.			Cement: 1.5' - grade.
									Bentonite: 2.5'-1.5'.
									#2 sand 10'-2.5'
-5					0.0	SAPROLITE: Green grades to tan saprolite.			
									Set shalllow 2" sch 40 PVC well at 10'. 7' (0.01" slot) screen.
-10									#2 sand 11'-10'.
					0.0	DIABASE: Diabase bedrock. Stop boring at 21', small amount of water in borehole.			Bentonite: 15'-11'.
-15									#2 sand 22'-15'.
-20									Set deep 2" sch 40 PVC well at 22'. 5' (0.01" slot) screen.
					0.0				

Geosyntec consultants

Borehole No. BW-TTU-05

Borehole / Well Construction Log

Project No.:	TR0265A	**Location:**	Gainesville, Virginia
Client:	ARC Gainesville	**Coordinates:**	N 6,973,829 E 11,744,079
Logged By:	M. Hansen	**Borehole Diameter:**	10-inch / 6-inch
Reviewed By:	R. Jensen	**Site Datum:**	NAD1983 StatePlane Virginia N FIPS 4501 ft
Driller:	Eichelbergers, Inc. (Jesse Trish)	**Ground Surface Elevation:**	326 ft amsl
Drilling Method:	Air Rotary	**Top PVC Casing Elevation:**	328 ft amsl
Well Material:	PVC	**Start Date - End Date:**	27 February 2008 - 29 February 2008

Depth (feet)	Stratigraphy	Lithologic Description	Drilling Information: Drilling Notes	Time	Drilling Rate (ft/min)	FID (ppm)
0		Saprolite		02:09 PM	NA	
				02:10 PM	2.00	
5						
				02:14 PM	1.25	
10				02:15 PM	3.00	
		Damp		02:16 PM	3.00	
15				02:17 PM	3.00	
		DIABASE				
		Wet	6-inch steel casing set at 20-ft bgs. Resumed drilling on 28 February 2008.	02:18 PM	2.00	
20				08:30 AM	NA	
		Wet	3+ gpm	08:40 AM	0.30	
25						
		Borehole depth 28.0 ft		08:45 AM	1.00	
30						
35						

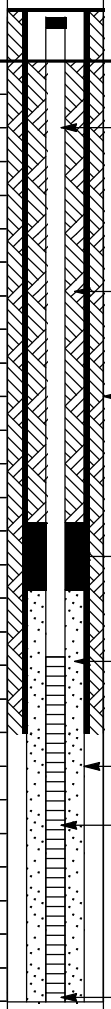

Comments
2-inch diameter, Schedule 40, PVC riser
95% Portland Type I/II cement - 5% granular bentonite
10-inch diameter boring / 6-inch diameter steel casing
3/8-inch Bentonite Chips
Morie #1 Sand
6-inch diameter boring
2-inch diameter, Schedule 40, 0.010-inch slot PVC screen
Sump

MASTER WELL CONSTRUCTION LOG TR0265A ARC GAINESVILLE.GPJ GEOSNTEC.GDT 2/20/09

Geosyntec consultants

Borehole No. DW 200-01

Borehole / Well Construction Log

Project No.:	TR0265A	**Location:**	Gainesville, Virginia
Client:	ARC Gainesville	**Coordinates:**	N 6,969,849 E 11,745,907
Logged By:	M. Hansen	**Borehole Diameter:**	10-inch / 6-inch
Reviewed By:	E. Jensen	**Site Datum:**	NAD1983 StatePlane Virginia N FIPS 4501 ft
Driller:	Eichelbergers, Inc.	**Ground Surface Elevation:**	275 ft amsl
Drilling Method:	Air Rotary	**Top PVC Casing Elevation:**	278 ft amsl
Well Material:	Open Borehole	**Start Date - End Date:**	1 May 2008 - 7 May 2008

Depth (feet)	Stratigraphy	Lithologic Description	Drilling Information: Drilling Notes	Drilling Information: Time	Drilling Information: Drilling Rate (ft/min)	Depth (feet)	Well Configuration	Comments
0		SANDY SILT (ML), brown, moist, fine to medium grained, some clay chunks		01:34 PM	NA	0		Lockable aluminum outer casing (2.3-ft ags)
15		Saprolite, weathered	Water at 14-ft bgs	01:53 PM 02:00 PM	0.74 0.07	15		
				02:02 PM	1.25			
20		DIABASE, semi-competent to competent		02:13 PM	0.18	20		
25		Hard		03:11 PM	0.10	25		
30		Fracture zone (30' - 33')	1 - 1.5 gpm			30		
35		Dry		03:27 PM	0.56	35		
				03:40 PM	0.23			
40				03:45 PM	0.40	40		95% Portland Type I/II cement - 5% granular bentonite
45		Softer grain rock		03:52 PM	0.57	45		
50				04:01 PM	0.67	50		
55				04:09 PM	0.62	55		
65				04:34 PM	0.40	65		
70		Softer grain rock		04:37 PM	1.33	70		10-inch diameter boring / 6-inch diameter steel casing
75				04:42 PM 04:44 PM	1.00 0.50	75		
				04:56 PM	0.25			
80				05:03 PM 05:11 PM	0.57 0.13	80		
85				05:15 PM	0.75	85		

Geosyntec consultants

Borehole No. DW 200-01

Borehole / Well Construction Log

Project No.:	TR0265A	**Location:**	Gainesville, Virginia
Client:	ARC Gainesville	**Coordinates:**	N 6,969,849 E 11,745,907
Logged By:	M. Hansen	**Borehole Diameter:**	10-inch / 6-inch
Reviewed By:	E. Jensen	**Site Datum:**	NAD1983 StatePlane Virginia N FIPS 4501 ft
Driller:	Eichelbergers, Inc.	**Ground Surface Elevation:**	275 ft amsl
Drilling Method:	Air Rotary	**Top PVC Casing Elevation:**	278 ft amsl
Well Material:	Open Borehole	**Start Date - End Date:**	1 May 2008 - 7 May 2008

Depth (feet)	Stratigraphy	Lithologic Description	Drilling Information: Drilling Notes	Drilling Information: Time	Drilling Information: Drilling Rate (ft/min)	Depth (feet)	Well Configuration	Comments
95				05:24 PM	1.00	95		
				05:29 PM	0.20			
100						100		
				05:41 PM	0.67			
105						105		
110						110		
115			Resumed drilling on 2 May 2008	06:07 PM	0.42	115		
				08:12 AM	0.50			
				08:14 AM	0.50			
120				08:21 AM	0.43	120		
				08:23 AM	0.50			
				08:30 AM	0.43			
125				08:32 AM	0.50	125		
				08:37 AM	0.40			
				08:39 AM	0.50			
130						130		95% Portland Type I/II cement - 5% granular bentonite
				08:52 AM	0.38			
135				08:59 AM	0.29	135		
140						140		
				09:22 AM	0.39			
145						145		
150				09:34 AM	0.58	150		
				09:41 AM	0.57			
155						155		
160				09:58 AM	0.35	160		10-inch diameter boring / 6-inch diameter steel casing
165				10:08 AM	0.50	165		
170				10:20 AM	0.42	170		
175				10:28 AM	0.50	175		

MASTER WELL CONSTRUCTION LOG PWS TR0265A ARC GAINESVILLE PWS.GPJ GEOSNTEC.GDT 6/19/09

Geosyntec consultants

Borehole No. DW 200-01

Borehole / Well Construction Log

Project No.:	TR0265A	**Location:**	Gainesville, Virginia
Client:	ARC Gainesville	**Coordinates:**	N 6,969,849 E 11,745,907
Logged By:	M. Hansen	**Borehole Diameter:**	10-inch / 6-inch
Reviewed By:	E. Jensen	**Site Datum:**	NAD1983 StatePlane Virginia N FIPS 4501 ft
Driller:	Eichelbergers, Inc.	**Ground Surface Elevation:**	275 ft amsl
Drilling Method:	Air Rotary	**Top PVC Casing Elevation:**	278 ft amsl
Well Material:	Open Borehole	**Start Date - End Date:**	1 May 2008 - 7 May 2008

Depth (feet)	Stratigraphy	Lithologic Description	Drilling Information: Drilling Notes	Drilling Information: Time	Drilling Information: Drilling Rate (ft/min)	Depth (feet)	Well Configuration	Comments
185						185		
190				11:34 AM	0.24	190		
195				11:40 AM	0.67	195		
200						200		
205						205		
210				12:13 PM 12:19 PM	0.39 0.50	210		
215				12:25 PM	0.67	215		
220						220		95% Portland Type I/II cement - 5% granular bentonite
225		Green/gray	Resumed drilling on 5 May 2008	12:30 PM	0.40	225		
230				12:50 PM	0.25	230		
235				01:00 PM 01:13 PM	0.50 0.23	235		
240						240		
245						245		
250				01:45 PM	0.38	250		10-inch diameter boring / 6-inch diameter steel casing
255				02:02 PM	0.29	255		
260			Resumed drilling on 7 May 2008	02:13 PM 08:05 AM 08:10 AM	0.27 0.40 0.40	260		
265						265		

MASTER WELL CONSTRUCTION LOG PWS TR0265A ARC GAINESVILLE PWS.GPJ GEOSNTEC.GDT 6/19/09

Geosyntec consultants

Borehole No. DW 200-01

Borehole / Well Construction Log

Project No.:	TR0265A	**Location:**	Gainesville, Virginia
Client:	ARC Gainesville	**Coordinates:**	N 6,969,849 E 11,745,907
Logged By:	M. Hansen	**Borehole Diameter:**	10-inch / 6-inch
Reviewed By:	E. Jensen	**Site Datum:**	NAD1983 StatePlane Virginia N FIPS 4501 ft
Driller:	Eichelbergers, Inc.	**Ground Surface Elevation:**	275 ft amsl
Drilling Method:	Air Rotary	**Top PVC Casing Elevation:**	278 ft amsl
Well Material:	Open Borehole	**Start Date - End Date:**	1 May 2008 - 7 May 2008

Depth (feet)	Stratigraphy	Lithologic Description	Drilling Information: Drilling Notes	Time	Drilling Rate (ft/min)	Depth (feet)	Well Configuration	Comments
275				08:22 AM	0.83	275		95% Portland Type I/II cement - 5% granular bentonite
280				08:31 AM	1.11	280		
285						285		10-inch diameter boring / 6-inch diameter steel casing
290				08:43 AM	0.92	290		
295		Small fracture, wet	Set casing 293-ft bgs No apparent flow	08:46 AM	1.33	295		
300				08:50 AM	1.25	300		
305						305		
310						310		6-inch diameter boring
315				09:09 AM	0.63	315		
320				09:11 AM	2.00	320		
325				09:14 AM	1.33	325		
330		Soft, broken (327' - 328')		09:25 AM	0.55	330		Open borehole
335		METASEDIMENT Soft, broken (332' - 336')		09:31 AM	1.00	335		
340		Fracture with water, artesian	20 gpm	09:33 AM	3.00	340		
345		Borehole depth 345.0 ft		09:44 AM 09:49 AM	0.36 0.60	345		
350						350		
355						355		

MASTER WELL CONSTRUCTION LOG PWS TR0265A ARC GAINESVILLE PWS.GPJ GEOSNTEC.GDT 6/19/09

Geosyntec consultants

Borehole No. DW 213-01

Borehole / Well Construction Log

Project No.:	TR0265A	**Location:**	Gainesville, Virginia
Client:	ARC Gainesville	**Coordinates:**	N 6,970,940 E 11,747,380
Logged By:	M. Hansen	**Borehole Diameter:**	10-inch / 6-inch
Reviewed By:	E. Jensen	**Site Datum:**	NAD1983 StatePlane Virginia N FIPS 4501 ft
Driller:	Eichelbergers, Inc.	**Ground Surface Elevation:**	299 ft amsl
Drilling Method:	Air Rotary	**Top PVC Casing Elevation:**	302 ft amsl
Well Material:	Open Borehole	**Start Date - End Date:**	8 May 2008 - 9 May 2008

Depth (feet)	Stratigraphy	Lithologic Description	Drilling Information: Drilling Notes	Drilling Information: Time	Drilling Information: Drilling Rate (ft/min)	Depth (feet)	Well Configuration	Comments
0		CLAYEY SILT (ML), reddish brown, trace fine to medium grained sand, trace gravel, moist		08:55 AM	NA	0		Lockable aluminum outer casing (2.5-ft ags)
5		Saprolite, weathered				5		
		METASEDIMENT, red, wet		09:05 AM	0.80			
10		Very weathered becoming semi competent		09:32 AM	0.07	10		
		DIABASE, semi competent to competent						
15		METASEDIMENT, interbedded red and gray				15		
20		Weathered, fracture (20' - 26')	0.5 gpm			20		95% Portland Type I/II cement - 5% granular bentonite
25						25		
		Gray shale, soft green rock		09:58 AM	0.65			
30		Red, dry		10:12 AM	0.21	30		
35				10:16 AM	1.00	35		
		Competent Gray shale		10:23 AM	0.57			
40		Red and gray		10:30 AM	0.29	40		10-inch diameter boring / 6-inch diameter steel casing
45						45		
50						50		
55		Fracture (54' - 56')	0.5 gpm			55		
		Gray	Set casing 58-ft bgs	11:04 AM	0.53			
60			Resumed drilling on 9 May 2008	08:31 AM	1.50	60		6-inch diameter boring
		Small fracture	No apparent flow	08:36 AM	0.40			
65		Red and gray shale interbedded with green rock, fractures	No apparent flow	08:37 AM	2.00	65		
70						70		Open borehole
75						75		
		Red, soft and broken (78' - 81')		08:47 AM	1.30			
80				08:48 AM	3.00	80		
85						85		

MASTER WELL CONSTRUCTION LOG PWS TR0265A ARC GAINESVILLE PWS.GPJ GEOSNTEC.GDT 6/19/09

Geosyntec consultants

Borehole No. DW 213-01

Borehole / Well Construction Log

Project No.:	TR0265A	**Location:**	Gainesville, Virginia
Client:	ARC Gainesville	**Coordinates:**	N 6,970,940 E 11,747,380
Logged By:	M. Hansen	**Borehole Diameter:**	10-inch / 6-inch
Reviewed By:	E. Jensen	**Site Datum:**	NAD1983 StatePlane Virginia N FIPS 4501 ft
Driller:	Eichelbergers, Inc.	**Ground Surface Elevation:**	299 ft amsl
Drilling Method:	Air Rotary	**Top PVC Casing Elevation:**	302 ft amsl
Well Material:	Open Borehole	**Start Date - End Date:**	8 May 2008 - 9 May 2008

Depth (feet)	Stratigraphy	Lithologic Description	Drilling Information: Drilling Notes	Drilling Information: Time	Drilling Information: Drilling Rate (ft/min)	Depth (feet)	Well Configuration	Comments
				08:59 AM	0.82			
95		Gray Red				95		
100				09:07 AM	1.37	100		
105						105		
		Fractures, alternating soft zones	No apparent flow	09:13 AM	1.00			
110		SILTSTONE, tan, metamorphosed		09:14 AM	2.00	110		
115				09:17 AM	2.00	115		
120		Becoming darker red		09:21 AM	1.50	120		
125						125		
130						130		
135		Dark red		09:38 AM	0.88	135		
140				09:41 AM	1.67	140		
145		Gray, contact is broken and fractured	1 gpm	09:55 AM	0.29	145		
150		Tan, lighter gray shale Gray				150		6-inch diameter boring
155						155		
				10:03 AM	1.50			
160				10:05 AM	2.00	160		Open borehole
165		Fracture	1 gpm	11:25 AM	0.05	165		
		Red and gray shale interbedded		11:29 AM	0.75			
170		Borehole depth 170.0 ft		11:32 AM	0.67	170		
175						175		

MASTER WELL CONSTRUCTION LOG PWS TR0265A ARC GAINESVILLE PWS.GPJ GEOSNTEC.GDT 6/19/09

Geosyntec consultants

Borehole No. DW 76-01

Borehole / Well Construction Log

Project No.:	TR0265A	**Location:**	Gainesville, Virginia
Client:	ARC Gainesville	**Coordinates:**	N 6,973,061 E 11,745,981
Logged By:	S. Compston	**Borehole Diameter:**	10-inch / 6-inch
Reviewed By:	E. Jensen	**Site Datum:**	NAD1983 StatePlane Virginia N FIPS 4501 ft
Driller:	Eichelbergers, Inc.	**Ground Surface Elevation:**	314 ft amsl
Drilling Method:	Air Rotary	**Top PVC Casing Elevation:**	316 ft amsl
Well Material:	Open Borehole	**Start Date - End Date:**	13 May 2008 - 13 May 2008

Depth (feet)	Stratigraphy	Lithologic Description	Drilling Information: Drilling Notes	Time	Drilling Rate (ft/min)	Depth (feet)	Well Configuration	Comments
0		Pavement		08:12 AM	NA	0		Lockable aluminum outer casing (1.9-ft ags)
5		Saprolite, sand and gravel, black, overburden, fractured		08:15 AM	2.00	5		10-inch diameter boring / 6-inch diameter steel casing
10				08:26 AM	0.27	10		
15		METASEDIMENT, fractured	No apparent flow	08:31 AM	1.00	15		
				08:32 AM	2.00			95% Portland Type I/II cement - 5% granular bentonite
20			Set casing 18-ft bgs	08:35 AM	0.67	20		
25		Gray		09:37 AM	0.06	25		
30		Intermittent trace calcite throughout		09:42 AM	1.40	30		
35		Increase in competence		09:44 AM	3.00	35		
40				09:45 AM	3.00	40		
				09:46 AM	4.00			
45		Gray/dark gray		09:50 AM	0.75	45		Open borehole
50						50		
55				09:52 AM	4.00	55		
60				09:54 AM	2.50	60		6-inch diameter boring
				09:55 AM	4.00			
65		Red/gray		10:02 AM	0.43	65		
70				10:03 AM	5.00	70		
75				10:05 AM	2.50	75		
80				10:07 AM	2.50	80		
				10:08 AM	2.00			
85				10:12 AM	0.75	85		
90				10:13 AM	5.00	90		
95				10:15 AM	2.50	95		
100				10:16 AM	5.00	100		Grout
105		Soft and broken, fractured (102' - 121')	0.8 gpm	10:18 AM	1.00	105		
				10:25 AM	0.43			
110				10:27 AM	2.50	110		
115				10:28 AM	5.00	115		
120						120		
125				10:31 AM	2.33	125		
				12:35 PM	1.00			
130		Borehole depth 130.0 ft		12:38 PM	1.67	130		
135						135		
140						140		
145						145		

MASTER WELL CONSTRUCTION LOG PWS TR0265A ARC GAINESVILLE PWS.GPJ GEOSNTEC.GDT 6/19/09

Geosyntec consultants

Borehole No. DW SB-01

Borehole / Well Construction Log

Project No.:	TR0265A	**Location:**	Gainesville, Virginia
Client:	ARC Gainesville	**Coordinates:**	N 6,970,739 E 11,744,622
Logged By:	M. Lonardo-Roy	**Borehole Diameter:**	10-inch / 6-inch
Reviewed By:	E. Jensen	**Site Datum:**	NAD1983 StatePlane Virginia N FIPS 4501 ft
Driller:	Eichelbergers, Inc. (C. Knaub)	**Ground Surface Elevation:**	284 ft amsl
Drilling Method:	Air Rotary	**Top Casing Elevation:**	283 ft amsl
Well Material:	Open Borehole	**Start Date - End Date:**	6 July 2009 - 13 July 2009

Depth (feet)	Stratigraphy	Lithologic Description	Drilling Information: Drilling Notes	Time	Drilling Rate (ft/min)	Depth (feet)	Well Configuration	Comments
0		ASPHALT		11:17 AM	NA	0		Flushmount surface completion
5		Overburden, silty clay, brown	Chatter up, trace water at interface of overburden and diabase			5		
10		DIABASE, grey, dry		11:21 AM	2.25	10		
15						15		
20						20		
25						25		
30						30		
35				11:34 AM	1.77	35		
40						40		6-inch diameter steel casing
45						45		
50						50		
55			Soft drilling, diabase chip size increases	04:23 PM	0.07	55		
60				04:33 PM	0.40	60		95% Portland Type I/II cement - 5% granular bentonite
65						65		
70			Softer Chatter up, harder	04:56 PM	0.67	70		
75						75		
80						80		
85		Trace calcite	Resumed drilling on 7 July 2009	05:19 PM 12:00 AM	0.57	85		
90						90		
95						95		
100						100		
105						105		
110				10:15 AM		110		
115						115		
120						120		
125						125		
130			Blow on hole to check for water, no water	11:24 AM	0.39	130		
135						135		
140						140		
145						145		
150				12:17 PM	0.37	150		
155						155		
160				12:48 PM	0.32	160		
165						165		
170						170		
175						175		
180						180		
185				03:09 PM	0.36	185		
190						190		
195						195		

MASTER WELL CONSTRUCTION LOG PWS TR0265A ARC GAINESVILLE PWS.GPJ GEOSNTEC.GDT 11/25/09

Geosyntec consultants

Borehole No. DW SB-01

Borehole / Well Construction Log

Project No.:	TR0265A	**Location:**	Gainesville, Virginia
Client:	ARC Gainesville	**Coordinates:**	N 6,970,739 E 11,744,622
Logged By:	M. Lonardo-Roy	**Borehole Diameter:**	10-inch / 6-inch
Reviewed By:	E. Jensen	**Site Datum:**	NAD1983 StatePlane Virginia N FIPS 4501 ft
Driller:	Eichelbergers, Inc. (C. Knaub)	**Ground Surface Elevation:**	284 ft amsl
Drilling Method:	Air Rotary	**Top Casing Elevation:**	283 ft amsl
Well Material:	Open Borehole	**Start Date - End Date:**	6 July 2009 - 13 July 2009

Depth (feet)	Stratigraphy	Lithologic Description	Drilling Information: Drilling Notes	Drilling Information: Time	Drilling Information: Drilling Rate (ft/min)	Depth (feet)	Well Configuration	Comments
205		DIABASE, grey, dry				205		
210				04:27 PM	0.33	210		
215						215		
220						220		
225						225		
230						230		
235			Resumed drilling on 8 July 2009	05:37 PM 08:49 AM	0.36	235		
240						240		6-inch diameter steel casing
245						245		
250						250		
255						255		
260						260		95% Portland Type I/II cement - 5% granular bentonite
265						265		
270						270		
275						275		
280						280		
285				10:12 AM	0.58	285		
290				10:35 AM	0.60	290		
295						295		
300						300		
305						305		
310				11:15 AM	0.47	310		
315						315		
320						320		
325						325		
330						330		
335				12:16 PM	0.51	335		
340						340		
345						345		
350						350		
355						355		
360				01:18 PM	0.45	360		
365		METASEDIMENT, black		03:05 PM	0.35	365		
370			Set casing 369 ft-bgs Resumed drilling on 13 July 2009	03:11 PM 12:16 PM	0.83	370		Hydrated Bentonite Seal
375						375		
380				12:26 PM	0.90	380		6-inch diameter boring Open borehole
385			~10 gpm	12:29 PM	1.67	385		
390		Artesian conditions Borehole depth 388.0 ft		12:44 PM	0.33	390		
395						395		

MASTER WELL CONSTRUCTION LOG PWS TR0265A ARC GAINESVILLE PWS.GPJ GEOSNTEC.GDT 11/25/09

Geosyntec consultants

Borehole No. DW SB-02

Borehole / Well Construction Log

Project No.:	TR0265A	**Location:**	Gainesville, Virginia
Client:	ARC Gainesville	**Coordinates:**	N 6,970,096 E 11,745,575
Logged By:	A. Gray	**Borehole Diameter:**	10-inch
Reviewed By:	E. Jensen	**Site Datum:**	NAD1983 StatePlane Virginia N FIPS 4501 ft
Driller:	Eichelbergers, Inc. (C. Knaub)	**Ground Surface Elevation:**	281 ft amsl
Drilling Method:	Air Rotary	**Top Casing Elevation:**	280 ft amsl
Well Material:	PVC	**Start Date - End Date:**	14 July 2009 - 16 July 2009

Depth (feet)	Stratigraphy	Lithologic Description	Drilling Information: Drilling Notes	Drilling Information: Time	Drilling Information: Drilling Rate (ft/min)	Depth (feet)	Well Configuration	Comments
0		ASPHALT		10:08 AM	NA	0		Flushmount surface completion
		GRAVEL, dry		10:10 AM	0.50			
		Overburden, silty clay, brown						
5		Overburden, silty sand, brown		10:16 AM	0.83	5		
10		DIABASE, dry		10:28 AM	0.50	10		
15						15		
20						20		
25						25		95% Portland Type I/II cement - 5% granular bentonite
30						30		
35						35		10-inch diameter boring
								4-inch diameter PVC riser
40						40		
45						45		
50						50		
55		Intermittent white and green calcite	Resumed drilling on 15 July 2009	07:59 AM		55		

MASTER WELL CONSTRUCTION LOG PWS TR0265A ARC GAINESVILLE PWS.GPJ GEOSNTEC.GDT 11/25/09

Geosyntec consultants

Borehole No. DW SB-02

Borehole / Well Construction Log

Project No.:	TR0265A	**Location:**	Gainesville, Virginia
Client:	ARC Gainesville	**Coordinates:**	N 6,970,096 E 11,745,575
Logged By:	A. Gray	**Borehole Diameter:**	10-inch
Reviewed By:	E. Jensen	**Site Datum:**	NAD1983 StatePlane Virginia N FIPS 4501 ft
Driller:	Eichelbergers, Inc. (C. Knaub)	**Ground Surface Elevation:**	281 ft amsl
Drilling Method:	Air Rotary	**Top Casing Elevation:**	280 ft amsl
Well Material:	PVC	**Start Date - End Date:**	14 July 2009 - 16 July 2009

Depth (feet)	Stratigraphy	Lithologic Description	Drilling Information: Drilling Notes	Drilling Information: Time	Drilling Information: Drilling Rate (ft/min)	Depth (feet)	Well Configuration	Comments
65		DIABASE, dry		08:24 AM	0.40	65		
70						70		
75				08:41 AM	0.59	75		
80				08:46 AM	1.00	80		
85						85		95% Portland Type I/II cement - 5% granular bentonite
90						90		
95						95		10-inch diameter boring
			Drilling slows	09:06 AM	0.94			4-inch diameter PVC riser
100						100		
105				09:18 AM	0.75	105		
110						110		
115						115		

MASTER WELL CONSTRUCTION LOG PWS TR0265A ARC GAINESVILLE PWS.GPJ GEOSNTEC.GDT 11/25/09

Geosyntec consultants

Borehole No. DW SB-02

Borehole / Well Construction Log

Project No.:	TR0265A	**Location:**	Gainesville, Virginia
Client:	ARC Gainesville	**Coordinates:**	N 6,970,096 E 11,745,575
Logged By:	A. Gray	**Borehole Diameter:**	10-inch
Reviewed By:	E. Jensen	**Site Datum:**	NAD1983 StatePlane Virginia N FIPS 4501 ft
Driller:	Eichelbergers, Inc. (C. Knaub)	**Ground Surface Elevation:**	281 ft amsl
Drilling Method:	Air Rotary	**Top Casing Elevation:**	280 ft amsl
Well Material:	PVC	**Start Date - End Date:**	14 July 2009 - 16 July 2009

Depth (feet)	Stratigraphy	Lithologic Description	Drilling Information: Drilling Notes	Drilling Information: Time	Drilling Information: Drilling Rate (ft/min)	Depth (feet)	Well Configuration	Comments
125		DIABASE, dry				125		
130				09:57 AM	0.71	130		
135						135		
140						140		
145		Fracture	7 - 8 gpm	10:17 AM	1.18	145		95% Portland Type I/II cement - 5% granular bentonite
150		Trace calcite				150		
155						155		10-inch diameter boring
			Very slow drilling	10:42 AM	0.48			4-inch diameter PVC riser
160						160		
165						165		
170						170		
175						175		

MASTER WELL CONSTRUCTION LOG PWS TR0265A ARC GAINESVILLE PWS.GPJ GEOSNTEC.GDT 11/25/09

Geosyntec consultants

Borehole No. DW SB-02

Borehole / Well Construction Log

Project No.:	TR0265A	**Location:**	Gainesville, Virginia
Client:	ARC Gainesville	**Coordinates:**	N 6,970,096 E 11,745,575
Logged By:	A. Gray	**Borehole Diameter:**	10-inch
Reviewed By:	E. Jensen	**Site Datum:**	NAD1983 StatePlane Virginia N FIPS 4501 ft
Driller:	Eichelbergers, Inc. (C. Knaub)	**Ground Surface Elevation:**	281 ft amsl
Drilling Method:	Air Rotary	**Top Casing Elevation:**	280 ft amsl
Well Material:	PVC	**Start Date - End Date:**	14 July 2009 - 16 July 2009

Depth (feet)	Stratigraphy	Lithologic Description	Drilling Information: Drilling Notes	Drilling Information: Time	Drilling Information: Drilling Rate (ft/min)
185		DIABASE, dry		11:50 AM	0.42
			Softer	12:07 PM	0.67
190		Iron staining and increased calcite	Slow	12:16 PM	0.67
195		Intermittent calcite			
200					
205				12:51 PM	0.43
210					
215					
220		METASEDIMENT, tan, black, grey, heat altered shale		02:52 PM	0.33
225		Fracture, artesian conditions 20-25 gpm at surface		02:55 PM	1.00
		Borehole depth 225.0 ft	60 gpm	02:56 PM	1.00
230					
235					

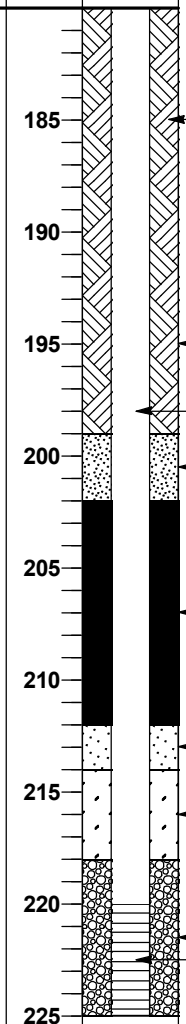

Comments

MASTER WELL CONSTRUCTION LOG PWS TR0265A ARC GAINESVILLE PWS.GPJ GEOSNTEC.GDT 11/25/09

GROUNDWATER TECHNOLOGY, INC.

CLIENT: Atlantic Research Corp.
PROJECT NAME: ARC/Gainesville
PROJECT NUMBER: 013228531-3102
LOCATION: 5945 Wellington Rd. Gainesville, Va.
DRILLER: Hardin-Huber

DATE 5/2/90 WELL NUMBER DW-12

CASED FROM +2' TO -18' WITH 8" Steelcasing
SCREENED FROM ____ TO ____ WITH ____
WELL DEPTH 350' WELL DIAMETER 8"
ELEVATION ____
ANNULUS COMPLETION Tremie grouted to 18'.
OTHER ____

DRILL RIG Schramm-Rotadrill T44
DRILL METHOD Air Rotary/Air Percussion
DATE(S) DRILLED 5/1/90-5/7/90
LOGGED BY A. Fix

WELL DETAIL	DEPTH	GRAPHIC COLUMN	LITHOLOGICAL DESCRIPTION	SAMPLE	COMMENTS
			Same		
	60				Drilling water
			Same		added at 58'
	65				
			Grayish-black(N2) dry DIABASE		
	70		Same		
	75		Same		
	80		Same		
	85		Same, some greenish gray		
			fragments		
			Same		
	90				
			Same		
	95		Same		
	100		Same		
	105		Same		
	110				

GROUNDWATER TECHNOLOGY, INC.

CLIENT: Atlantic Research Corp.
PROJECT NAME: ARC/Gainesville
PROJECT NUMBER: 013228531-3102
LOCATION: 5945 Wellington Rd. Gainesville, Va.
DRILLER: Hardin-Huber

DATE 5/4/90 WELL NUMBER DW-12

CASED FROM +2' TO -18' WITH 8" Steelcasing
SCREENED FROM ____ TO ____ WITH ____
WELL DEPTH 350' WELL DIAMETER 8"
ELEVATION ____
ANNULUS COMPLETION Tremie grouted to 18'.
OTHER ____

DRILL RIG Schramm-Rotadrill T44
DRILL METHOD Air Rotary/Air Percussion
DATE(S) DRILLED 5/1/90-5/7/90
LOGGED BY A. Fix

WELL DETAIL	DEPTH	GRAPHIC COLUMN	LITHOLOGICAL DESCRIPTION	SAMPLE	COMMENTS
			Same		
	110				Drilling water added
			Same		
	115				
			Same		
	120				
			Same		
	125				
			Same		
	130				
			Same		
	135				
			Same		
	140				
			Same		
	145				
			Same		
	150				
			Same		
	155				
			Same		
	160				

GROUNDWATER TECHNOLOGY, INC.

CLIENT: Atlantic Research Corp.
PROJECT NAME: ARC/Gainesville
PROJECT NUMBER: 013228531-3102
LOCATION: 5945 Wellington Rd. Gainesville, Va.
DRILLER: Hardin-Huber

DATE 5/4/90 WELL NUMBER DW-12

CASED FROM +2' TO -18' WITH 8" Steelcasing
SCREENED FROM ____ TO ____ WITH ____
WELL DEPTH 350' WELL DIAMETER 8"
ELEVATION ____
ANNULUS COMPLETION Tremie grouted to 18'.
OTHER ____

DRILL RIG Schramm-Rotadrill T44
DRILL METHOD Air Rotary/Air Percussion
DATE(S) DRILLED 5/1/90-5/7/90
LOGGED BY A. Fix

WELL DETAIL	DEPTH	GRAPHIC COLUMN	LITHOLOGICAL DESCRIPTION	SAMPLE	COMMENTS
			Same		
	165				
			Same		
	170				
			Same		
	175				
			Same		
	180				
			Same		
	185				
					Drilling water added
			Same		
	190				
			Same		
	195				
	200		Same		
	205		Same		
	210		Grayish-black, finer grained		Easier drilling
			DIABASE-little calcite		
			Same		
	215				

GROUNDWATER TECHNOLOGY, INC.

CLIENT: Atlantic Research Corp.
PROJECT NAME: ARC/Gainesville
PROJECT NUMBER: 013228531-3102
LOCATION: 5945 Wellington Rd. Gainesville, Va.
DRILLER: Hardin-Huber

DATE 5/7/90 WELL NUMBER DW-12

CASED FROM +2' TO -18' WITH 8" Steelcasing
SCREENED FROM ___ TO ___ WITH ___
WELL DEPTH 350' WELL DIAMETER 8"
ELEVATION ___
ANNULUS COMPLETION Tremie grouted to 18'.
OTHER ___

DRILL RIG Schramm-Rotadrill T44
DRILL METHOD Air Rotary/Air Percussion
DATE(S) DRILLED 5/1/90-5/7/90
LOGGED BY A. Fix

WELL DETAIL	DEPTH	GRAPHIC COLUMN	LITHOLOGICAL DESCRIPTION	SAMPLE	COMMENTS
	220		Same		
	225		Same-no calcite		
	230		Same		
	235		Same		
	240		Med. dark gray to dark gray, fine grained SHALE(?)		See comment at end of log.
	245		Same		Drilling easier
	250		Same		
	255		Same		
	260		Same-moist, softer		
	265		Same		
	270		Same		

GROUNDWATER TECHNOLOGY, INC.

CLIENT: Atlantic Research Corp.
PROJECT NAME: ARC/Gainesville
PROJECT NUMBER: 013228531-3102
LOCATION: 5945 Wellington Rd. Gainesville, Va.
DRILLER: Hardin-Huber

DATE 5/7/90 WELL NUMBER DW-12

CASED FROM +2' TO -18' WITH 8" Steelcasing
SCREENED FROM ____ TO ____ WITH ____
WELL DEPTH 350' WELL DIAMETER 8"
ELEVATION ____
ANNULUS COMPLETION Tremie grouted to 18'.
OTHER ____

DRILL RIG Schramm-Rotadrill T44
DRILL METHOD Air Rotary/Air Percussion
DATE(S) DRILLED 5/1/90-5/7/90
LOGGED BY A. Fix

WELL DETAIL	DEPTH	GRAPHIC COLUMN	LITHOLOGICAL DESCRIPTION	SAMPLE	COMMENTS
	275		Same-wet		
	280		Same-black SHALE		Water in hole
	285		Same		
	290		Same		
	295		Same		
	300		Same		
	305		Same		
	310		Black-brownish black-greenish black,		
			fine grained black-greenish gray		
	315		shale		
	320		Black-brownish black-greenish		
			black SHALE		
	325				

GROUNDWATER TECHNOLOGY, INC.

CLIENT: Atlantic Research Corp.
PROJECT NAME: ARC/Gainesville
PROJECT NUMBER: 013228531-3102
LOCATION: 5945 Wellington Rd. Gainesville, Va.
DRILLER: Hardin-Huber

DATE 5/7/90 WELL NUMBER DW-12

CASED FROM +2' TO -18' WITH 8" Steelcasing
SCREENED FROM ____ TO ____ WITH ____
WELL DEPTH 350' WELL DIAMETER 8"
ELEVATION ____
ANNULUS COMPLETION Tremie grouted to 18'.
OTHER ____

DRILL RIG Schramm-Rotadrill T44
DRILL METHOD Air Rotary/Air Percussion
DATE(S) DRILLED 5/1/90-5/7/90
LOGGED BY A. Fix

WELL DETAIL	DEPTH	GRAPHIC COLUMN	LITHOLOGICAL DESCRIPTION	SAMPLE	COMMENTS
			Black-brownish black SHALE		
	325		Black, blackish borwn, greenish		
	330		SHALE		
			Same		
	335		Same		
	340		Same		
	345		Same		
	350		*All sedimentary strata encountered have undergone some degree of contact metamorphism and show evidence of recrystallization		

GROUNDWATER TECHNOLOGY, INC.

CLIENT: Atlantic Research Corp.
PROJECT NAME: ARC/Gainesville
PROJECT NUMBER: 013228531-3102
LOCATION: 5945 Wellington Rd.
Gainesville, Va.
DRILLER: Hardin-Huber, Inc.

DATE 5/10/90 WELL NUMBER DW-13

CASED FROM +1.5' TO 34.5' WITH 8" Steel casing
SCREENED FROM ____ TO ____ WITH ____
WELL DEPTH 350' WELL DIAMETER 8"
ELEVATION ____
ANNULUS COMPLETION Tremie grouted to 34.5'.
OTHER ____

DRILL RIG Schramm Rotadrill T44
DRILL METHOD Air Rotary/Air Percussion
DATE(S) DRILLED 5/10/90-5/12/90
LOGGED BY A. Fix

WELL DETAIL	DEPTH	GRAPHIC COLUMN	LITHOLOGICAL DESCRIPTION	SAMPLE	COMMENTS
	5		Brown, saturated, SAND and		Water
			varying amounts of silt and clay		
	10		Same		
	15		Weathered DIABASE		
			Brown-light med. gray, saturated		
	20		weathered DIABASE		Water
	25		Light med. gray DIABASE		
	30		Same		
	35		Same-dry		
	40		Light med. gray, dry DIABASE		Drilling water
					added
	45		Same		
	50		Same		
	55		Same		

GROUNDWATER TECHNOLOGY, INC.

CLIENT: Atlantic Research Corp.
PROJECT NAME: ARC/Gainesville
PROJECT NUMBER: 013228531-3102
LOCATION: 5945 Wellington Rd. Gainesville, Va.
DRILLER: Hardin-Huber, Inc.

DATE 5/11/90 WELL NUMBER DW-13

CASED FROM +1.5' TO 34.5' WITH 8" Steel casing
SCREENED FROM ____ TO ____ WITH ____
WELL DEPTH 350' WELL DIAMETER 8"
ELEVATION ____
ANNULUS COMPLETION Tremie grouted to 34.5'.
OTHER ____

DRILL RIG Schramm Rotadrill T44
DRILL METHOD Air Rotary/Air Percussion
DATE(S) DRILLED 5/10/90-5/12/90
LOGGED BY A. Fix

WELL DETAIL	DEPTH	GRAPHIC COLUMN	LITHOLOGICAL DESCRIPTION	SAMPLE	COMMENTS
					Drilling water
					added
	60		Same		
	65		Dark gray,dry, DIABASE (N3)		
	70		Same		
	75		Same		
	80		Same		
	85		Same		Stopped
					Drilling easier 88'
	90		Dark gray, dry, very fine		
			grained DIABASE		
	95		Same		
	100		Same		
			Same		
	105				
			Same-more secondary mineraliz-		
	110		ation		Water added

GROUNDWATER TECHNOLOGY, INC.

CLIENT: Atlantic Research Corp.
PROJECT NAME: ARC/Gainesville
PROJECT NUMBER: 013228531-3102
LOCATION: 5945 Wellington Rd.
Gainesville, Va.
DRILLER: Hardin-Huber, Inc.

DATE 5/11/90 WELL NUMBER DW-13

CASED FROM +1.5' TO 34.5' WITH 8" Steel casing
SCREENED FROM ____ TO ____ WITH ____
WELL DEPTH 350' WELL DIAMETER 8"
ELEVATION ____
ANNULUS COMPLETION Tremie grouted to 34.5'.
OTHER ____

DRILL RIG Schramm Rotadrill T44
DRILL METHOD Air Rotary/Air Percussion
DATE(S) DRILLED 5/10/90-5/12/90
LOGGED BY A. Fix

WELL DETAIL	DEPTH	GRAPHIC COLUMN	LITHOLOGICAL DESCRIPTION	SAMPLE	COMMENTS
	115		Same		
	120		Black, SHALE		*See comment at end
					of log.
	125		Same		
	130		Same		
	135		Same		Water encountered
	140		Same		
	145		Same		
	150		Black and green, brownish black shale		
	155		Same		
	160		Same		
	165		Same		

GROUNDWATER TECHNOLOGY, INC.

CLIENT: Atlantic Research Corp.
PROJECT NAME: ARC/Gainesville
PROJECT NUMBER: 013228531-3102
LOCATION: 5945 Wellington Rd.
Gainesville, Va.
DRILLER: Hardin-Huber, Inc.

DATE 5/11/90 WELL NUMBER DW-13

CASED FROM +1.5' TO 34.5' WITH 8" Steel casing
SCREENED FROM ____ TO ____ WITH ____
WELL DEPTH 350' WELL DIAMETER 8"
ELEVATION ____
ANNULUS COMPLETION Tremie grouted to 34.5'.
OTHER ____

DRILL RIG Schramm Rotadrill T44
DRILL METHOD Air Rotary/Air Percussion
DATE(S) DRILLED 5/10/90-5/12/90
LOGGED BY A. Fix

WELL DETAIL	DEPTH	GRAPHIC COLUMN	LITHOLOGICAL DESCRIPTION	SAMPLE	COMMENTS
	170		Same		
	175		Same-mostly brown		
	180		Same-and some tan sandstone		
	185		Black/brown shale		
	190		Same		
	195		Same		
	200		Same-some sandstone-tan and green		
	205		Black and brown SHALE		
	210		Brownish gray SANDSTONE and SHALE		
	215		Brown and black SHALE		
	220		Same-softer		

GROUNDWATER TECHNOLOGY, INC.

CLIENT: Atlantic Research Corp.
PROJECT NAME: ARC/Gainesville
PROJECT NUMBER: 013228531-3102
LOCATION: 5945 Wellington Rd. Gainesville, Va.
DRILLER: Hardin-Huber, Inc.

DATE 5/11-5/12/90 WELL NUMBER DW-13

CASED FROM +1.5' TO 34.5' WITH 8" Steel casing
SCREENED FROM ____ TO ____ WITH ____
WELL DEPTH 350' WELL DIAMETER 8"
ELEVATION ____
ANNULUS COMPLETION Tremie grouted to 34.5'.
OTHER ____

DRILL RIG Schramm Rotadrill T44
DRILL METHOD Air Rotary/Air Percussion
DATE(S) DRILLED 5/10/90-5/12/90
LOGGED BY A. Fix

WELL DETAIL	DEPTH	GRAPHIC COLUMN	LITHOLOGICAL DESCRIPTION	SAMPLE	COMMENTS
	225		Same		
	230		Same		
	235		Same		
	240		Same		
	245		Same		
	250		Same		
	255		Same-some SANDSTONE		
	260		Same		
	265		Same		
	270		Same		
	275		Same		

GROUNDWATER TECHNOLOGY, INC.

CLIENT: Atlantic Research Corp.
PROJECT NAME: ARC/Gainesville
PROJECT NUMBER: 013228531-3102
LOCATION: 5945 Wellington Rd.
Gainesville, Va.
DRILLER: Hardin-Huber, Inc.

DATE 5/12/90 WELL NUMBER DW-13

CASED FROM +1.5' TO 34.5' WITH 8" Steel casing
SCREENED FROM ____ TO ____ WITH ____
WELL DEPTH 350' WELL DIAMETER 8"
ELEVATION ____
ANNULUS COMPLETION Tremie grouted to 34.5'.
OTHER ____

DRILL RIG Schramm Rotadrill T44
DRILL METHOD Air Rotary/Air Percussion
DATE(S) DRILLED 5/10/90-5/12/90
LOGGED BY A. Fix

WELL DETAIL	DEPTH	GRAPHIC COLUMN	LITHOLOGICAL DESCRIPTION	SAMPLE	COMMENTS
	280		Same		
	285		Same		Odor
	290		Same		Some calcite between 285' & 290'
	295		Same		
	300		Same		
	305		Same		
	310		Same- some SANDSTOME		
	315		SHALE- black,brown,rust,slaty texture		
	320		Same		
	325		Same		
	330		Same		

GROUNDWATER TECHNOLOGY, INC.

CLIENT: Atlantic Research Corp.
PROJECT NAME: ARC/Gainesville
PROJECT NUMBER: 013228531-3102
LOCATION: 5945 Wellington Rd.
Gainesville, Va.
DRILLER: Hardin-Huber, Inc.

DATE 5/12/90 WELL NUMBER DW-13

CASED FROM +1.5' TO 34.5' WITH 8" Steel casing
SCREENED FROM ____ TO ____ WITH ____
WELL DEPTH 350' WELL DIAMETER 8"
ELEVATION ____
ANNULUS COMPLETION Tremie grouted to 34.5'.
OTHER ____

DRILL RIG Schramm Rotadrill T44
DRILL METHOD Air Rotary/Air Percussion
DATE(S) DRILLED 5/10/90-5/12/90
LOGGED BY A. Fix

WELL DETAIL	DEPTH	GRAPHIC COLUMN	LITHOLOGICAL DESCRIPTION	SAMPLE	COMMENTS
	335		Greenish black 5G 2/1 SHALE		
	340		Same		
	345		Black and brown SHALE		
	350		Same		
			*All sedimentary strata ancountered have undergone some degree of contact metamorphism and show evidence of recrystallization		

Log of Boring: DW-18
Date: 09/11/02
Date(s) Drilled: 07/26/02-07/29/02
Boring Depth: 400'
Boring Diameter: 0.83'/0.5'
First Water Depth: 340'
Bedrock Depth: 5'
Elevation: NA
Number of Samples: None collected
Logged By: AJA

Client: Atlantic Research Corp.
Project Name: ARC Gainesville
Project Number: 1040A
Location: 5945 Wellington Road
Gainesville, Virginia
Driller: Groundwater Systems, Inc.
Drill Rig: Schramm
Drill Method: Air rotary
Sampling Method: None used
Page: 1 of 2

Depth (feet bgs)	Sample Number	Sample Interval	Recovery	Time	PID Units	Lithological Description	Symbol	Well/Point Construction	Comments
0						Ground Surface			Ambient air PID 0.0 ppmv.
10					0.0	(TOPSOIL) Topsoil overburden to 5'.			
20					0.0	(BEDROCK) Competent bedrock, black fine grained.			Set 0.5' diameter steel casing to 50'. Portland cement/ bentonite grout tremie piped in annulus to seal casing in bedrock.
30						(BEDROCK) Black diabase, fractured zone, groundwater up to 12 gpm.			
40						(BEDROCK) Black diabase, soft to competent, no fractures.			
50					0.0	(BEDROCK) Black diabase, soft zone at 63'-70', no fractures, no groundwater.			
60									
70									
80									
90									
100									
110									
120									
130									
140									
150									
160									
170									
180									
190									
200									
210									

Log of Boring: DW-18
Date: 09/11/02
Date(s) Drilled: 07/26/02-07/29/02
Boring Depth: 400'
Boring Diameter: 0.83'/0.5'
First Water Depth: 340'
Bedrock Depth: 5'
Elevation: NA
Number of Samples: None collected
Logged By: AJA

Client: Atlantic Research Corp.
Project Name: ARC Gainesville
Project Number: 1040A
Location: 5945 Wellington Road
Gainesville, Virginia
Driller: Groundwater Systems, Inc.
Drill Rig: Schramm
Drill Method: Air rotary
Sampling Method: None used
Page: 2 of 2

Depth (feet bgs)	Sample Number	Sample Interval	Recovery	Time	PID Units	Lithological Description	Symbol	Well/Point Construction	Comments
220–420						(BEDROCK) Black diabase, soft zone at 63'-70', no fractures, no groundwater.			
320						(METASEDIMENT) Black metasediment, soft, no groundwater.			
340					0.0	(METASEDIMENT) Black metasediment, some fractures, groundwater to 1 gpm.			
370						(METASEDIMENT) As above, more fractures, groundwater to 2 gpm.			
390						(METASEDIMENT) As above, fractured, groundwater to 7 gpm.			
400						End of Boring			

Environmental Alliance, Inc.

Filename: 1040A/DW-18

Log of Boring: DW-20
Date: 09/11/02
Date(s) Drilled: 07/24/02-07/30/02
Boring Depth: 350'
Boring Diameter: 0.83'/0.5'
First Water Depth: 30'
Bedrock Depth: 7'
Elevation: NA
Number of Samples: None collected
Logged By: AJA

Client: Atlantic Research Corp.
Project Name: ARC Gainesville
Project Number: 1040A
Location: 5945 Wellington Road
Gainesville, Virginia
Driller: Groundwater Systems, Inc.
Drill Rig: Schramm
Drill Method: Air rotary
Sampling Method: None used
Page: 1 of 2

Depth (feet bgs)	Sample Number	Sample Interval	Recovery	Time	PID Units	Lithological Description	Symbol	Well/Point Construction	Comments
0					0.0	Ground Surface			Ambient air PID 0.0 ppmv.
						(Pt) Topsoil, overburden.			
10						(BEDROCK) Black diabase, competent.			Set 0.5' diameter steel casing to 20'. Portland cement/ bentonite grout tremie piped in annulus to seal casing in bedrock.
20					0.0				
30					0.0	(BEDROCK) Black sandy/chunky zone, fractured, groundwater to 2 gpm.			
40						(BEDROCK) Black fine grained bedrock, no fractures, groundwater as above.			
50									
60					0.0	(BEDROCK) Black sandy/chunky rock, fractured, groundwater to 2.5 gpm.			Set 4" PVC well within boring - 0.02 slot screen 190'-350'. Casing 1.5' above grade to 190'. #2 sand 178'-350'. Bentonite 170'-178'. Cement 170' to grade.
70						(BEDROCK) Black fine grained bedrock, fracture zone at 148'-153', no groundwater.			
80									
90									
100									
110									
120									
130									
140									
150									
160									
170									
180									

Log of Boring: DW-20
Date: 09/11/02
Date(s) Drilled: 07/24/02-07/30/02
Boring Depth: 350'
Boring Diameter: 0.83'/0.5'
First Water Depth: 30'
Bedrock Depth: 7'
Elevation: NA
Number of Samples: None collected
Logged By: AJA

Client: Atlantic Research Corp.
Project Name: ARC Gainesville
Project Number: 1040A
Location: 5945 Wellington Road
Gainesville, Virginia
Driller: Groundwater Systems, Inc.
Drill Rig: Schramm
Drill Method: Air rotary
Sampling Method: None used

Depth (feet bgs)	Sample Number	Sample Interval	Recovery	Time	PID Units	Lithological Description	Symbol	Well/Point Construction	Comments
190									
200									
210									
220					0.0	(METASEDIMENT) Black metasediment.			
230						(METASEDIMENT) Fracture - groundwater to 5 gpm. As above, some fractures, little groundwater.			
240									
250									
260									
270						(METASEDIMENT) Tan metasediment with black interbedded metasediment.			
280						(METASEDIMENT) Black metasediment, soft, no fractures.			
290					0.0	(METASEDIMENT) Black metasediment, hard, no fractures.			
300									
310									
320						(METASEDIMENT) Black metasediment, no fractures.			
330									
340									
350						End of Boring			
360									

Log of Boring: DW-28

Date Started:	10/5/04
Date Completed:	10/5/04
Total Depth (ft):	210.00
Boring Diameter (in):	8
Bedrock Depth (ft):	12
Elevation (ft-msl):	N/A
Remark:	

Project Code:	1040A
Project Name:	ARC - Gainesville
Drilled By:	Bedford Well Drilling
Logged By:	Jason Thomas
Drill Rig:	Ingersoll-Rand T3W
Drill Method:	Air Rotary Hammer
Sampling Method:	Grab

Depth	Sample Number	Sample Interval	Recovery (inches)	Blow Counts	PID Units	Lithological Description	Interpreted Lithology	Well Construction	Comments
0					0.0	CLAY: Brown red silty clay, moist, no odor.			Deep well: casing (2" PVC) 180' to surface Cement grout 2.5' to grade Intermediate well: casing (2" PVC) 95' to surface Shallow well: casing (2" PVC) 20' to surface Bentonite 18' - 2.5' #2 sand 44' - 18' Shallow well: screen 40' - 20' (20-slot)
-25					0.0	METASEDIMENT: Maroon metasediment, dry, no odor.			Soft drilling @ 30'
					0.0	METASEDIMENT: Gray metasediment, dry, no odor. Wet at 105'.			Dry, fracture @ 36' Shallow well set at 45'. Riser (2" PVC) 45' - 40' Bentonite 92' - 44'
-50									
					0.0				Soft zone @ 62'. 2-3 gpm water
-75					0.0				Fracture @ 75', moist: 1/2 gpm of water
									#2 sand 116' - 93' Intermediate well set 115'. Screen 115' - 95' (20-slot)
-100					0.0				Fracture @ 105': 1 gpm of water

Log of Boring: DW-28

Date Started:	10/5/04
Date Completed:	10/5/04
Total Depth (ft):	210.00
Boring Diameter (in):	8
Bedrock Depth (ft):	12
Elevation (ft-msl):	N/A
Remark:	

Project Code:	1040A
Project Name:	ARC - Gainesville
Drilled By:	Bedford Well Drilling
Logged By:	Jason Thomas
Drill Rig:	Ingersoll-Rand T3W
Drill Method:	Air Rotary Hammer
Sampling Method:	Grab

Depth	Sample Number	Sample Interval	Recovery (inches)	Blow Counts	PID Units	Lithological Description	Interpreted Lithology	Well Construction	Comments
-125									Bentonite 178' - 116'
-150									
-175					0.0				Fracture @ 175': 3-4 gpm of water #2 sand 210' - 178' Deep well set 210'. Screen 210' - 180' (20-slot)
-200									Fracture @ 197' - : 7-10 gpm of water

Log of Boring: DW-29

Date Started:	10/5/04
Date Completed:	10/5/04
Total Depth (ft):	215.00
Boring Diameter (in):	8
Bedrock Depth (ft):	1
Elevation (ft-msl):	N/A
Remark:	

Project Code:	1040A
Project Name:	ARC - Gainesville
Drilled By:	Bedford Well Drilling
Logged By:	Andrew Applebaum
Drill Rig:	Reich Drill T-650WII
Drill Method:	Air Rotary Hammer
Sampling Method:	Grab

Depth	Sample Number	Sample Interval	Recovery (inches)	Blow Counts	PID Units	Lithological Description	Interpreted Lithology	Well Construction	Comments
0					0.0	ASPHALT: Asphalt, gravel, underlain by brown silty clay, dry.			Shallow: casing 20' to +2.5'
					0.0	METASEDIMENT: Red brown weathered metasediment bedrock.			Intermediate: casing 135' to 2.5'+
						METASEDIMENT: Alternating gray and red brown metasediment, more competent with depth.			Cement 2.5' to 0' and set stick up.
									Deep: casing 185' to 2.5'+
									Bentonite 18' - 2.5'
									Soft zone 15' - 16' - dust reduction, no water
									#2 sand 40.5' - 18'
									Shallow well: screen 40' - 20' (20-slot)
-25									Soft zone at 25' - dust reduction, little water (<0.5 gpm)
									Broken rock zone at 30'
									Broken rock zone at 35'
									Shallow well set 45'. Casing 45' - 40'. Bentonite 45' - 40.5'
					0.0				Bentonite 133' - 45'. Soft zone at 45'
-50									Soft zone at 51'
									Soft zone at 68'
-75									
									Soft zone at 95'
-100					0.0				Dust reduction at 101'

Log of Boring: DW-29

Date Started:	10/5/04
Date Completed:	10/5/04
Total Depth (ft):	215.00
Boring Diameter (in):	8
Bedrock Depth (ft):	1
Elevation (ft-msl):	N/A
Remark:	

Project Code:	1040A
Project Name:	ARC - Gainesville
Drilled By:	Bedford Well Drilling
Logged By:	Andrew Applebaum
Drill Rig:	Reich Drill T-650WII
Drill Method:	Air Rotary Hammer
Sampling Method:	Grab

Depth	Sample Number	Sample Interval	Recovery (inches)	Blow Counts	PID Units	Lithological Description	Interpreted Lithology	Well Construction	Comments
-125									Soft zone at 126' - 130'. Soft rock / fracture #2 sand 156' - 133' Intermediate well set 155'. Screen 155' - 135' (20-slot)
150									Bentonite 183' - 156' Dust reduction at 157'. Water in boring (~1-2 gpm). No dust by 165'.
-175									#2 sand 215' - 183' Broken up zone at 185' - 190' Groundwater at 4.5 gpm at 190' - 195' Deep well set 215'. Screen 215' - 185' (20-slot) Fracture at 205' - more groundwater (~7-8 gpm)
-200									

Log of Boring: DW-3

Date Started:	10/7/04
Date Completed:	10/7/04
Total Depth (ft):	370.00
Boring Diameter (in):	6
Bedrock Depth (ft):	10
Elevation (ft-msl):	326.11
Remark:	

Project Code:	1040A
Project Name:	ARC - Gainesville
Drilled By:	Bedford Well Drilling
Logged By:	Jason Early
Drill Rig:	Ingersoll Rand T3-W
Drill Method:	Air Rotary
Sampling Method:	Grab

Depth	Sample Number	Sample Interval	Recovery (inches)	Blow Counts	PID Units	Lithological Description	Interpreted Lithology	Well Construction	Comments
0									312' riser (2" PVC). Bottom cap, locking well plug Concrete - 2' to grade
						DIABASE: Black diabase with no fractures.			
-25									
-50									
-75									
-100									Bentonite 305' to 2.5'
-125									
-150									
-175									

Log of Boring: DW-3

Date Started:	10/7/04
Date Completed:	10/7/04
Total Depth (ft):	370.00
Boring Diameter (in):	6
Bedrock Depth (ft):	10
Elevation (ft-msl):	326.11
Remark:	

Project Code:	1040A
Project Name:	ARC - Gainesville
Drilled By:	Bedford Well Drilling
Logged By:	Jason Early
Drill Rig:	Ingersoll Rand T3-W
Drill Method:	Air Rotary
Sampling Method:	Grab

Depth	Sample Number	Sample Interval	Recovery (inches)	Blow Counts	PID Units	Lithological Description	Interpreted Lithology	Well Construction	Comments
-200									
-225									
-250					0.0	DIABASE: Black diabase bedrock, hard, dry, no fractures.			
-275									
-300									#2 sand - 370' to 305'
-325					0.0	METASEDIMENT: Black to maroon metasediment bedrock (altered shale/siltstone). Softer drilling.			Fractures at 320' (~0.5 gpm). BZ = 0.0
-350					0.0				Fractures at 340' (1-2 gpm) BZ = 0.0 60' screen (20-slot)
-375					0.0 0.0 0.0				Fractures at 358' (1-2 gpm), 361' (3-4 gpm), 363' (4-5 gpm), BZ = 0.0

Log of Boring: DW-30

Date Started:	10/6/04
Date Completed:	10/6/04
Total Depth (ft):	250.00
Boring Diameter (in):	8
Bedrock Depth (ft):	12
Elevation (ft-msl):	N/A
Remark:	

Project Code:	1040A
Project Name:	ARC - Gainesville
Drilled By:	Bedford Well Drilling
Logged By:	Jason Thomas
Drill Rig:	Reich Drill T-650WII
Drill Method:	Air Rotary Hammer
Sampling Method:	Grab

Depth	Sample Number	Sample Interval	Recovery (inches)	Blow Counts	PID Units	Lithological Description	Interpreted Lithology	Well Construction	Comments
0					0.0	SILT: Tan silt, some clay, dry.			Cement grout 2.5' to grade
					0.0	SAPROLITE: Tan saprolite, dry, soft to more competent with depth.			Shallow: casing 25' to surface' (2" PVC) Intermediate: casing 130' to surface' (2" PVC) Deep: casing 220' to surface' (2" PVC)
					0.0	METASEDIMENT: Gray metasediment, dry, soft to firm with depth.			Shallow: Bentonite 23' - 2.5'
-25						METASEDIMENT: Dark gray metasediment, dry, no odor.			Shallow: #2 sand 46' - 23' Shallow: screen 45' - 25' (20-slot)
-50									Shallow well set 50'. Casing 50' - 45' (2" PVC) Intermediate: Bentonite 128' - 46'
-75						METASEDIMENT: Dark gray to black metasediment, dry, no odor.			
						METASEDIMENT: Black/gray metasediment, water at 85', otherwise dry, no odor.			Hard drilling at ~80'
-100						METASEDIMENT: Gray metasediment, moist, no odor. Wet at 141'.			
-125									Intermediate: #2 sand 151' - 128' Soft zone 130' - 132'

Log of Boring: DW-30

Date Started:	10/6/04
Date Completed:	10/6/04
Total Depth (ft):	250.00
Boring Diameter (in):	8
Bedrock Depth (ft):	12
Elevation (ft-msl):	N/A
Remark:	

Project Code:	1040A
Project Name:	ARC - Gainesville
Drilled By:	Bedford Well Drilling
Logged By:	Jason Thomas
Drill Rig:	Reich Drill T-650WII
Drill Method:	Air Rotary Hammer
Sampling Method:	Grab

Depth	Sample Number	Sample Interval	Recovery (inches)	Blow Counts	PID Units	Lithological Description	Interpreted Lithology	Well Construction	Comments
-150						METASEDIMENT: Brown/red metasediment, wet, no odor.			Soft zone 130' - 132' Intermediate well set 150'. Screen 150' - 130' (20-slot) Wet at 141', 10 gpm Deep: Bentonite 218' - 151'
-175									
-200									
-225									Deep: #2 sand 250' - 218' Deep well set 250'. Screen 250' - 220' (20-slot) Water at 11 gpm
-250									

Log of Boring: DW-31

Date Started:	10/8/04
Date Completed:	10/13/04
Total Depth (ft):	320.00
Boring Diameter (in):	10 / 6
Bedrock Depth (ft):	15
Elevation (ft-msl):	N/A
Remark:	

Project Code:	1040A
Project Name:	ARC - Gainesville
Drilled By:	Bedford Well Drilling
Logged By:	Jason Early
Drill Rig:	Ingersoll-RandT3W
Drill Method:	Air Rotary
Sampling Method:	Grab

Depth	Sample Number	Sample Interval	Recovery (inches)	Blow Counts	PID Units	Lithological Description	Interpreted Lithology	Well Construction	Comments
0					0.0	TOPSOIL			Set 6" steel casing at 60'. Tremie pipe cement grout from 60' to grade
						SAPROLITE: Brown sandy silt/saprolite, moist, no odor.			
					0.0	DIABASE: Dark gray to black diabase bedrock.			Small fracture at 18', ~2 gpm
-25									Borehole yielding ~5 gpm at 22'
									Intermediate: casing (2" PVC) 142.5' - 2.5' above grade
									Intermediate: bentonite 135' to grade
-50									Fracture at 47' - yield ~3.7 gpm
					0.0	DIABASE: Black diabase.			Deep: casing (2" PVC) 190' - 2.5' above grade
-75					0.0				Fracture at 75' - no water
-100									Fracture at 95' - no water
-125									Intermediate well: #2 sand 166' - 135'
									Intermediate well set @ 320'. Screen (20-slot) 162.5' - 142.5'
150					0.0				Water approx 0.5 gpm at 150'
									Fracture at 155' - water approx 1-2 gpm

Log of Boring: DW-31

Date Started:	10/8/04
Date Completed:	10/13/04
Total Depth (ft):	320.00
Boring Diameter (in):	10 / 6
Bedrock Depth (ft):	15
Elevation (ft-msl):	N/A
Remark:	

Project Code:	1040A
Project Name:	ARC - Gainesville
Drilled By:	Bedford Well Drilling
Logged By:	Jason Early
Drill Rig:	Ingersoll-RandT3W
Drill Method:	Air Rotary
Sampling Method:	Grab

Depth	Sample Number	Sample Interval	Recovery (inches)	Blow Counts	PID Units	Lithological Description	Interpreted Lithology	Well Construction	Comments
-175					0.0	METASEDIMENT: Maroon metasediment.			Deep well: bentonite 186' - 166'
									Deep well: #2 sand 320' - 186'
									Deep well set @ 320'. Screen (20-slot) 320' - 190'
									Fracture at 193' - water approx 5-7 gpm
-200									
-225									
-250									
-275									Soft drilling at 278'
					0.0				Fracture at 292' - 298' - water approx 10-12 gpm
-300									Soft fracture at 304' - water approx 15-20 gpm
									Broken rock / fracture at 306' - water approx. 40-50 gpm
									Fracture at 313' - water ~50-75 gpm.
									Fracture at 318' - water > 75 gpm
325									

Log of Boring: DW-32I

Date Started: 9/9/2005
Date Completed: 9/9/2005
Total Depth (ft): 50.00
Boring Diameter (in): 6
Bedrock Depth (ft): 5
Elevation (ft-msl): N/A
Remark:

Project Code: 1040A
Project Name: ARC - Gainesville
Drilled By: Bedford Well Drilling
Logged By: Jason Thomas
Drill Rig: Ingersoll Rand T3W
Drill Method: Air rotary
Sampling Method: N/A

Depth	Sample Number	Sample Interval	Recovery (inches)	Blow Counts	PID Units	Lithological Description	Interpreted Lithology	Well Construction	Comments
0					0.0	CL: Brown orange silty clay, dry, no odor.			Background air PID 0.0.
-5					0.0	METASEDIMENT: Alternating brown/gray metasediments. 5' - brown. 18' - gray. 23' - fracture. 28'-29' - fracture zone. 35' -fracture, H2O 1/4 gpm. 40'-40.5' - jet black with strong septic odor.			
-10									
-15									
-20									
-25									
-30									
-35									
-40									
-45									
-50									

Log of Boring: IW-6

Date Started: 9/7/2005
Date Completed: 9/8/2005
Total Depth (ft): 100.00
Boring Diameter (in): 6
Bedrock Depth (ft): 1.5
Elevation (ft-msl): N/A
Remark:

Project Code: 1040A
Project Name: ARC - Gainesville
Drilled By: Bedford Well Drilling
Logged By: Jason Thomas
Drill Rig: Ingersoll Rand T3W
Drill Method: Air rotary
Sampling Method: N/A

Depth	Sample Number	Sample Interval	Recovery (inches)	Blow Counts	PID Units	Lithological Description	Interpreted Lithology	Well Construction	Comments
0 to -100						CL: Brown clay & sand, dry, no odor. METASEDIMENT: Alternating gray/brown metasediments. 1.5' - gray. 7' - brown. 10.5' - gray. 16'-16.5' - soft zone. Fractures at 30', 32', 33', 34'. <1/4 gpm. Fracture at 51', reduction of dust. Fracture at 53'. 82' - light gray. 80'-90' -soft zone, H2O 1/2 gpm. 97'-100' - dark gray.	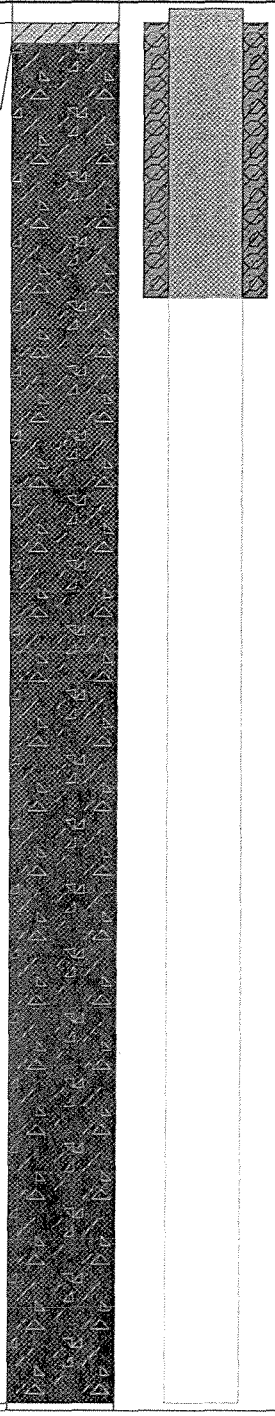		Background air PID 0.0. 6" steel casing in 10" boring to 20', grouted with concrete using tremie pipe.

Log of Boring: IW-7

Date Started: 9/7/2005
Date Completed: 9/8/2005
Total Depth (ft): 100.00
Boring Diameter (in): 6
Bedrock Depth (ft): 3
Elevation (ft-msl): N/A
Remark:

Project Code: 1040A
Project Name: ARC - Gainesville
Drilled By: Bedford Well Drilling
Logged By: Jason Thomas
Drill Rig: Ingersoll Rand T3W
Drill Method: Air rotary
Sampling Method: N/A

Depth	Sample Number	Sample Interval	Recovery (inches)	Blow Counts	PID Units	Lithological Description	Interpreted Lithology	Well Construction	Comments
0						CL: Brown silty clay, dry, no odor.			Background air PID 0.0.
-5						METASEDIMENT: Alternating gray/brown metasediments. 13' - brown/orange. 15' - gray. 18' - fracture. 30' - brown. 32' -gray. 45' - brown. 50' - gray. 53' - fracture, H2O < 1/2 gpm. 78'-100' - brown soft zone. 82' - fracture with quartz present, H2O 1/2 to 3/4 gpm.			6" steel casing in 10" boring to 20', grouted with concrete using a tremie pipe.
-10									
-15									
-20									
-25									
-30									
-35									
-40									
-45									
-50									
-55									
-60									
-65									
-70									
-75									
-80									
-85									
-90									
-95									
-100									

Log of Boring: IW-8

Date Started: 9/7/2005
Date Completed: 9/9/2005
Total Depth (ft): 300.00
Boring Diameter (in): 6
Bedrock Depth (ft): 3
Elevation (ft-msl): N/A
Remark:

Project Code: 1040A
Project Name: ARC - Gainesville
Drilled By: Bedford Well Drilling
Logged By: Jason Thomas
Drill Rig: Ingersoll Rand T3W
Drill Method: Air rotary
Sampling Method: N/A

Depth	Sample Number	Sample Interval	Recovery (inches)	Blow Counts	PID Units	Lithological Description	Interpreted Lithology	Well Construction	Comments
0 to -150						CL: Brown silty clay, dry, no odor. METASEDIMENT: Alternating brown/gray metasediments. 3' - gray. 9' - brown. 11.5'-12' - soft zone. 20' - gray & dust reduction. 26'-27' - soft zone. 50' - dust reduction, fracture, H2O 1/4 gpm. 93' - brown. 95' - gray. 95'-100' -soft zone. 97' - brown. 101' -gray. 128' - fracture, H2O 2.5 gpm. 184' - fracture, H2O 8 gpm. 200' -fracture, H2O 9 gpm. 226' - brown, fracture, H2O 45 gpm. 240' - gray, fracture, H2O 60 gpm. 263' -fracture, H2O 70 gpm. 266'-270' - fracture zone. 284' - fracture, H2O 75 gpm.			Background air PID 0.0. 6" steel casing in 10" boring to 82', grouted with concrete using tremie pipe.

Log of Boring: IW-8

Date Started: 9/7/2005
Date Completed: 9/9/2005
Total Depth (ft): 300.00
Boring Diameter (in): 6
Bedrock Depth (ft): 3
Elevation (ft-msl): N/A
Remark:

Project Code: 1040A
Project Name: ARC - Gainesville
Drilled By: Bedford Well Drilling
Logged By: Jason Thomas
Drill Rig: Ingersoll Rand T3W
Drill Method: Air rotary
Sampling Method: N/A

Depth	Sample Number	Sample Interval	Recovery (Inches)	Blow Counts	PID Units	Lithological Description	Interpreted Lithology	Well Construction	Comments
-155									
-160									
-165									
-170									
-175									
-180									
-185									
-190									
-195									
-200									
205									
-210									
-215									
-220									
-225									
-230									
-235									
-240									
-245									
-250									
-255									
-260									
-265									
-270									
-275									
-280									
-285									
-290									
295									
-300									

Log of Boring: SW 105-01

Date(s) Drilled: 10/8/02
Boring Depth: 11.5'
Boring Diameter: 8"
First Water Depth: NA
Bedrock Depth: NA
Elevation: NA
Number of Samples: 1
Logged By: AJA

Client: Atlantic Research Corp.
Project Name: ARC Gainesville
Project Number: 1040A
Location: Gainesville, Virginia

Driller: Earth Matters
Drill Rig: Mobile B-61
Drill Method: Hollow Stem Auger
Sampling Method: Split Spoon
Page: 1 of 1

Depth (feet bgs)	Sample Number	Sample Interval	Recovery	Blow Counts	Time	PID Units	Lithological Description	Symbol	Well/Point Construction	Comments
0							Ground Surface			
	1	0-2	1.5'	5-10-14-18	1725	0.0	(CL) Brown silty clay with some fine sand, damp, crumbly.			Sampled for PCBs.
2							(CL) Brown fine sand, silt and clay.			Auger to refusal after 0-2' sample. Use GP105-01 log to charaterize lithology (within 5' of SW105-01 location).
4							(CL) Same as above.			
6										
8							(SAPROLITE) Saprolite.			
10							(SM) Tan silty sand, dry, saprolite.Refusal at 11.5'.			
12							End of Boring			

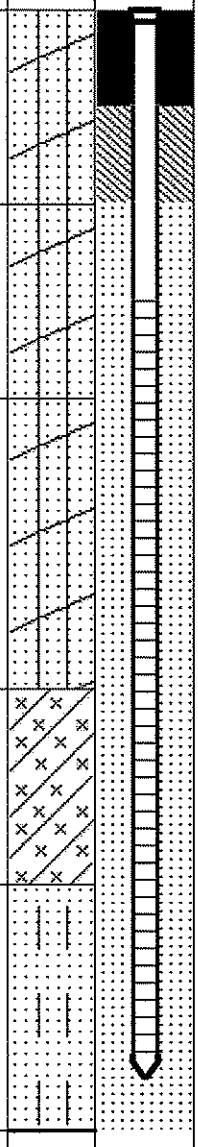

Environmental Alliance, Inc.

Filename: 1040A/SW 105-01

Log of Boring: SW 105-03

Date Started:	3/11/04
Date Completed:	3/11/04
Total Depth (ft):	20.00
Boring Diameter (in):	6
Bedrock Depth (ft):	10
Elevation (ft-msl):	N/A
Remark:	

Project Code:	1040A
Project Name:	ARC - Gainesville
Drilled By:	Bedford Well Drilling
Logged By:	Jason Early
Drill Rig:	Ingersol Rand T3W
Drill Method:	Air Rotary
Sampling Method:	Split Spoon

Depth	Sample Number	Sample Interval	Recovery (inches)	Blow Counts	PID Units	Lithological Description	Interpreted Lithology	Well Construction	Comments
0					0.0	OH: Topsoil			Breathing zone PID 0.0
									Steel stickup to +2.5'
									Sample collected 2'-4' for lab analysis
									Cement grout 2' to surface
	1				0.0	CL: Black gray clay, dry, no odor			#2 sand 10'-2'
									Shallow well: 8' riser
									Deep well: 18' riser
-5					0.0				Set shallow 1" well at 10'. 5' screen (10 slot)
					0.0	SAPROLITE: Light brown saprolite, dry, no odor			
-10					0.0	DIABASE: Light gray diabase bedrock, dry, no odor. Fracture zone at 15', 17' (GW)			Bentonite 13'-10'
									#2 sand 20'-13'
-15									Set deep 1" well at 20'. 5' screen (10 slot)
-20									

Log of Boring: SW 15-02

Date Started:	12/17/2003
Date Completed:	12/17/2003
Total Depth (ft):	16.00
Boring Diameter (in):	6
Bedrock Depth (ft):	1
Elevation (ft-msl):	N/A
Remark:	

Project Code:	1040A
Project Name:	ARC - Gainesville
Drilled By:	Bedford Well Drilling
Logged By:	Jason Early
Drill Rig:	Ingersol Rand T3W
Drill Method:	Air Rotary
Sampling Method:	N/A

Depth	Sample Number	Sample Interval	Recovery (inches)	Blow Counts	PID Units	Lithological Description	Interpreted Lithology	Well Construction	Comments
0					0.0	PT: Top soil and gravel fill, moist.			Breathing zone PID = 0.0
					0.0	DIABASE: Light gray diabase, hard, dry, no odor. Fracture at 9', water ~1-2 gpm			No soil sample collected. Threaded bottom cap, locking well plug, and protective steel stick-up
									Cement grout/Concrete 5.5'-grade.
									2" PVC casing 9'-grade.
									Hydrated bentonite chips 7.25'-4'.
-5									
									#0 sand 8'-7.25'.
									#1 sand 16'-8'.
									10-slot screen 16'-9'.
-10									
-15									

GROUNDWATER TECHNOLOGY, INC.

CLIENT: ARC
PROJECT NAME: ARC
PROJECT NUMBER: 320-000-8531-07
LOCATION: Behind building 200

DATE 5-8-89 WELL NUMBER SW200-02

DRILLER: G.T. Drilling

CASED FROM +1.5 TO 5 WITH Sch. 40 PVC
SCREENED FROM 5 TO 15 WITH .010" slot
WELL DEPTH 15 WELL DIAMETER 4" ID
ELEVATION
ANNULUS COMPLETION Grout 0-2; Bentonite 2-3; Sand 3-15
OTHER

DRILL RIG Mobil B-61
DRILL METHOD HSA
DATE(S) DRILLED 5-8-89
LOGGED BY EJC

WELL DETAIL	DEPTH	GRAPHIC COLUMN	LITHOLOGICAL DESCRIPTION	SAMPLE	COMMENTS
	0		Brown, damp, clayey SILT w/ some		2-3-6-7 (6")
	1		sand in lowest part of SS.		
			Silty SAND. Slightly damp, stiff,		5-10-12-23 (12")
	2		multicolored, mostly medium brown,		Rock fragments in
			some white, some orange brown,		cuttings @ 3.5'.
	3		decomposed bedrock. Grays & browns,		14-18-25-20 (12")
			some orange-brown, damp. Some		
	4		White particles. Silty SAND,		
			decomposed diabase. Rock fragments.		
	5		Brown, silty SAND. Some whites.		20-19-17-26 (12")
			More damp. Rock fragments.		
			Decomposed diabase.		
	6		Light brown and gray, very faint		52-65-100/5 (12")
	7		green tinted, silty SAND. Dry.		
	8		Decomposed diabase.		
			As before.		100/4" (6")
	9		3" layer of rock @ 10.5'.		
	10		WOR 9'.		
	11				
	12				
			Auger refusal at 15'. Water table		
	13		at 6'. Samples labeled as TB-200-02.		
	14				
	15				

GROUNDWATER TECHNOLOGY, INC.

CLIENT: ARC
PROJECT NAME: ARC
PROJECT NUMBER: 320-000-8531-07
LOCATION:

DATE 5-18-89 WELL NUMBER SW222-02

DRILLER: G.T. Drilling

CASED FROM +1.5 TO 3 WITH Sch. 40 PVC
SCREENED FROM 3 TO 7.5 WITH .020 slot
WELL DEPTH 7.5 WELL DIAMETER 4"ID
ELEVATION
ANNULUS COMPLETION Grout 0-1.5; Bentonite 1.5-2; Sand pack 2-7.5
OTHER Samples labeled at Tb-222-02

DRILL RIG Mobil B-61
DRILL METHOD HSA
DATE(S) DRILLED 5-18-89
LOGGED BY EJC

WELL DETAIL	DEPTH	GRAPHIC COLUMN	LITHOLOGICAL DESCRIPTION	SAMPLE	COMMENTS
	0		Some sod. Moderate, brown,		2-2-4-9 (12)
	1		5YR 4/4 moist, soft, clayey SILT		
			w/ some sand (ML).		
	2				
	3		Dark, yellowish, orange 10YR 6/6,		
			moist, dense, clayey, silty SAND (ML).		16-31-100/5.5 (12)
	4				Much more sandy
					beginning at 2.5'.
	5		Dusky, yello, 5Y 6/4, damp, medium		8-18-21-28 (18)
			dense, silty SAND (SM).		
	6		Decomposed diabase.		Rock frags in cuttings.
			Sand grains are dark gray to black.		
	7		As before.		100/5.5 (4)
	8		Hard rock at 6'		
			Auger refusal at 7.5'.		
	9				
	10				
	11				
	12				
	13				
	14				
	15				

GROUNDWATER TECHNOLOGY, INC.

CLIENT: ARC
PROJECT NAME: ARC
PROJECT NUMBER: 320-000-8531-07
LOCATION: West of Building
DRILLER: G.T. Drilling

DATE 6-15-89 WELL NUMBER SW 40-07

CASED FROM +1 TO 14 WITH 40 PVC
SCREENED FROM 3 TO 14 WITH .010" slot
WELL DEPTH 14 WELL DIAMETER 4"
ELEVATION
ANNULUS COMPLETION Grout 0-1; Bentonite 1-2; Sand 2-15
OTHER

DRILL RIG Mobile B-61
DRILL METHOD HSA
DATE(S) DRILLED 6/13-6/15/89
LOGGED BY EJC

WELL DETAIL	DEPTH	GRAPHIC COLUMN	LITHOLOGICAL DESCRIPTION	SAMPLE	COMMENTS
	0		Top 9": Moderate, yellowish, brown		3-10-17-19 (18)
	1		moist, silty, fine SAND (SM). Few		distinct "sweet"
			roots. Lower 9":Grayish, orange,		smell
	2		10 YR 7/4, silty, medium SAND (SM).		
			Strong, sweet smell.		25-26-29-23 (18)
	3				FID-1000+ ppm in
					open borehole at 4'.
	4				
			As before.		7-9-11-17 (12)
	5				
	6				
			Dusky, yellowish, 5Y 6/4, moist,		18-38-47-74 (24)
	7		silty sand (SM). Fe staining.		
	8		As before. Sand particles are		20-45-50-77 (18)
			dark green/black.		
	9				
	10				
			As before. More sandy.		85-100/5
	11				
	12		As before. More sandy.		
	13				
	14		Refusal at 15'.		
	15				

Log of Boring: SW 40-57

Date Started: 09/27/05
Date Completed: 09/27/05
Total Depth (ft): 23.00
Boring Diameter (in): 6
Bedrock Depth (ft): 18
Elevation (ft-msl): N/A
Remark:

Project Code: 1040A
Project Name: ARC - Gainesville
Drilled By: Northern VA Drilling
Logged By: Jason Early
Drill Rig: Gill-Beetle 140S/4D
Drill Method: Air rotary
Sampling Method: N/A

Depth	Sample Number	Sample Interval	Recovery (inches)	Blow Counts	PID Units	Lithological Description	Interpreted Lithology	Well Construction	Comments
0						OH: Topsoil.			Breathing zone PID 0.0.
					0.0	ML: Brown clayey silt, dry, no odor.			Backfilled hole with bentonite 23'-18'. Set well at 18' with 13' of screen, 8' of riser, bottom caps, locking well plugs.
-5									Annulus: #2 sand 18'-3', bentonite 3'-2', cement grout 2'-grade, protective steel cover.
-10					0.0	SAPROLITE: Dark brown saprolite (weathered diabase), dry, no odor.			
-15									
-20					0.0	DIABASE: Dark gray to black diabase bedrock, dry, no odor.			

Log of Boring: SW 42-02

Date(s) Drilled: 10/8/02
Boring Depth: 10'
Boring Diameter: 8"
First Water Depth: NA
Bedrock Depth: 10'
Elevation: NA
Number of Samples: 5
Logged By: AJA

Client: Atlantic Research Corp.
Project Name: ARC Gainesville
Project Number: 1040A
Location: Gainesville, Virginia

Driller: Earth Matters
Drill Rig: Mobile B-61
Drill Method: Hollow Stem Auger
Sampling Method: Split Spoon
Page: 1 of 1

Depth (feet bgs)	Sample Number	Sample Interval	Recovery	Blow Counts	Time	PID Units	Lithological Description	Symbol	Well/Point Construction	Comments
							Ground Surface			
0	1	0-2	0.66'	7-6-6-9	0740	0.0	(CL-ML) Brown silty clay, trace fine sand, dry to damp.			
2	2	2-4	1.5'	9-13-20-25	0750	0.0	(CL) Brown clay with fine-medium sand, damp to dry, saprolite.			
4	3	4-6	1'.5	16-34-51\ 0.4'	0820	0.0	(CL) Same as above.			
6	4	6-8	1'	21-48-51\ 0.33'	0835	0.0	(CL) Same as above.			Sampled 7'-8' for perchlorate/VOCs.
8	5	8-10	1'	21-48-51\ 0.33'	0850	1.4	(CL) Same as above, saturated.Refusal at 10'.			
10							End of Boring			

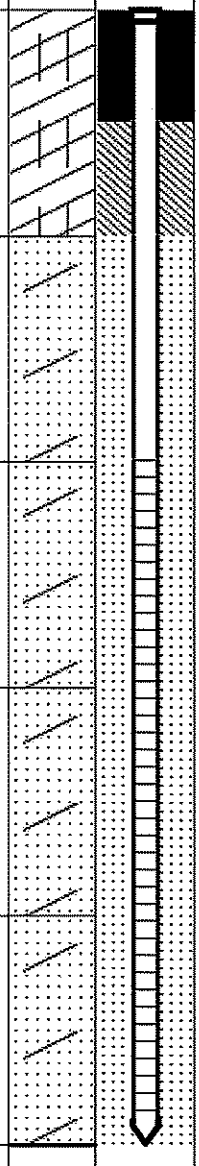

Environmental Alliance, Inc.

Filename: 1040A/SW 42-02

GROUNDWATER TECHNOLOGY, INC.

CLIENT: ARC
PROJECT NAME: ARC
PROJECT NUMBER: 320-000-8531-07
LOCATION: East of building 46

DATE 6-5-89 WELL NUMBER SW46-01

DRILLER: G.T. Drilling

CASED FROM +1.5 TO 6' WITH Sch. 40 PVC
SCREENED FROM 6' TO 16' WITH .010" slot
WELL DEPTH 16' WELL DIAMETER 4" ID
ELEVATION
ANNULUS COMPLETION Grout 0-2; Bentonite 2-4; Sand pack 4-16.
OTHER Complete 6-8-89

DRILL RIG Mobil B-61
DRILL METHOD HSA
DATE(S) DRILLED 6-5-89
LOGGED BY EJC

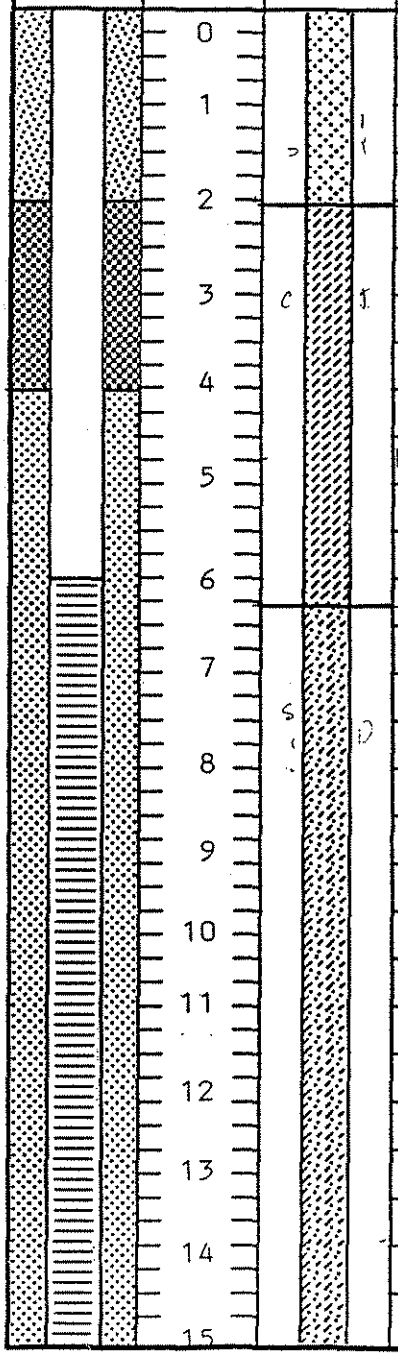

DEPTH	LITHOLOGICAL DESCRIPTION	SAMPLE	COMMENTS
0	Dark, yellowish, brown, 10YR 4/2,		2-3-2-4 (6")
1	damp, sandy CLAY (CL).		
	Plant roots.		
2			
	Light, brown, 5 YR 5/6, clayey		3-6-9-11 (12)
3	SILT w/ some fine sand (ML). Damp.		
4	Moderate, yellowish, brown, 10YR	4/2,	11-13-19-22 (18)
	moist, clayey SILT w/ some sand (ML).		
5	Bottom 4" is light, olive, gray, 5Y	3/2.	
6	Dark, yellowish, brown, 10 YR 4/2	,	8-11-20-22 (12)
	Moist, clayey, silty, fine SAND (SM).		
7	Decomposed diabase.		
8	Moderate, yellowish, brown, 10 YR	5/4,	7-17-11-14 (12)
	moist, medium dense, clayey, silty		
9	SAND (SM). Decomposed diabase.		Water @ Approx. 8'
10	Moderate, yellowish, brown, 10 YR	5/4,	13-18-15-14 (12)
11	wet, medium dense, silty SAND (SM).		
	Laminae. Decomposed diabase.		
12			
	As before as per cuttings.		
13			
14			Drilling terminated at 16.5'.
15			

Log of Boring: SW 47-02

Date Started:	4/7/04
Date Completed:	4/7/04
Total Depth (ft):	5.00
Boring Diameter (in):	N/A
Bedrock Depth (ft):	5
Elevation (ft-msl):	284.54
Remark:	

Project Code:	1040A
Project Name:	ARC - Gainesville
Drilled By:	Environmental Alliance, Inc.
Logged By:	Jason Early
Drill Rig:	N/A
Drill Method:	Backhoe (dug well)
Sampling Method:	Grab

Depth	Sample Number	Sample Interval	Recovery (inches)	Blow Counts	PID Units	Lithological Description	Interpreted Lithology	Well Construction	Comments
0						OH: Topsoil			Breathing zone PID 0.0. Bottom cap, locking well plug, protective steel locking stickup Cement grout 0.5'-grade. Native soil backfill 2'-0.5'. 2" PVC casing 3'-+2'. Hydrated bentonite pellets 2.5'-2'. Pea gravel 5'-2.5'. 20-slot screen 5'-3'. Collected grab soil sample 4'-5'
-5						SAPROLITE: Competent diabase bedrock at bottom			

Log of Boring: SW 5-04

Date Started:	12/17/03
Date Completed:	12/17/03
Total Depth (ft):	22.00
Boring Diameter (in):	6
Bedrock Depth (ft):	6
Elevation (ft-msl):	318.67
Remark:	

Project Code:	1040A
Project Name:	ARC - Gainesville
Drilled By:	Bedford Well Drilling
Logged By:	Chris Thoeny
Drill Rig:	HSA Rig/Mobile Air Rotary
Drill Method:	Hollow Stem Auger/Air Rotary
Sampling Method:	Split Spoon

Depth	Sample Number	Sample Interval	Recovery (inches)	Blow Counts	PID Units	Lithological Description	Interpreted Lithology	Well Construction	Comments
0	1		9			CL: Black, very wet clay with saprolite at bottom 4"			Breathing zone PID 0.0.
	2					SAPROLITE: Saprolite			No soil sample collected for analysis.Threaded bottom cap, locking well plug, and protective steel stick-up
-5					0.0	DIABASE: Weathered diabase bedrock, soft, dry			Concrete 3'-grade Auger refusal due to bedrock at 2.5'. Used air rotary drilling to complete well Hydrated bentonite chips 9.5'-3' 2" PVC casing 11'-0'
-10					0.0	DIABASE: Light gray diabase bedrock, hard. Small fracture at 13' - soft, ~1-2 gpm, slight solvent odor			#1 sand 10'-9.5' #2 sand 22'-10' 10 slot screen 21'-11'
-15					0.0				
-20									

Log of Boring: SW 74-07

Date Started:	3/9/2004
Date Completed:	3/9/2004
Total Depth (ft):	9.50
Boring Diameter (in):	1.5/5
Bedrock Depth (ft):	N/A
Elevation (ft-msl):	N/A
Remark:	

Project Code:	1040A
Project Name:	ARC - Gainesville
Drilled By:	Environmental Alliance, Inc.
Logged By:	Tom Murphy
Drill Rig:	Case backhoe
Drill Method:	Dug well
Sampling Method:	N/A

Depth	Sample Number	Sample Interval	Recovery (inches)	Blow Counts	PID Units	Lithological Description	Interpreted Lithology	Well Construction	Comments
									Air background PID 0.0.
0	1				0.0	OL: Brown silty clay.			No sample collected for lab analysis.
	2				0.0				Concrete 2'-grade.
						CL: Blue clay.			Native soil 3'-2'.
									Pea gravel 9.5'-3'.
	3				0.0	SAPROLITE: Orange brown to dark brown weathered bedrock with rock fragments, wet at 8', refusal at 9.5'.			Casing 4.5'-2' above grade.
-5									0.01" slot screen 9.5'-4.5'.
									Set 2" schedule 40 PVC well at 9.5'.
-10									

Geosyntec consultants

Borehole No. SW SB-01

Borehole / Well Construction Log

Project No.:	TR0265A	**Location:**	Gainesville, Virginia
Client:	ARC Gainesville	**Coordinates:**	N 6,970,954 E 11,744,323
Logged By:	M. Lonardo-Roy	**Borehole Diameter:**	6-inch
Reviewed By:	E. Jensen	**Site Datum:**	NAD1983 StatePlane Virginia N FIPS 4501 ft
Driller:	Eichelbergers, Inc. (C. Knaub)	**Ground Surface Elevation:**	290 ft amsl
Drilling Method:	Air Rotary	**Top Casing Elevation:**	289 ft amsl
Well Material:	PVC	**Start Date - End Date:**	21 July 2009 - 21 July 2009

Depth (feet)	Stratigraphy	Lithologic Description	Drilling Information: Drilling Notes	Drilling Information: Time	Drilling Information: Drilling Rate (ft/min)
0		ASPHALT		08:43 AM	NA
		SILT, brown, moist			
5		DIABASE, dry	Hard drilling	08:47 AM	1.50
10			Softer, easier drilling	08:50 AM	2.00
15		Borehole depth 15.5 ft		08:53 AM	1.17

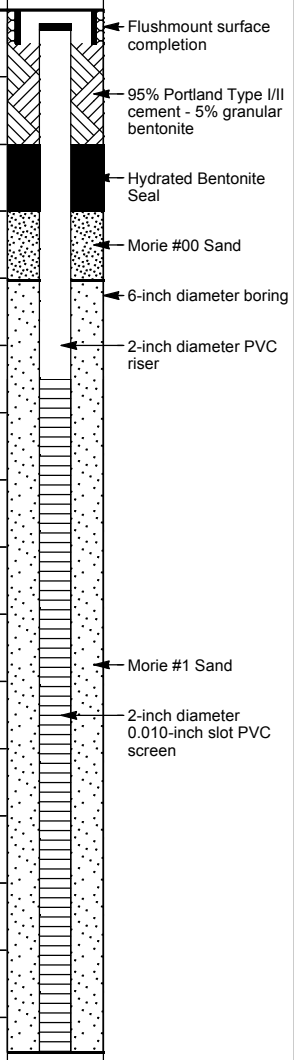

MASTER WELL CONSTRUCTION LOG PWS TR0265A ARC GAINESVILLE PWS.GPJ GEOSNTEC.GDT 11/25/09

Geosyntec consultants

Borehole No. SW SB-02

Borehole / Well Construction Log

Project No.:	TR0265A	**Location:**	Gainesville, Virginia
Client:	ARC Gainesville	**Coordinates:**	N 6,970,659 E 11,744,730
Logged By:	M. Lonardo-Roy	**Borehole Diameter:**	6-inch
Reviewed By:	E. Jensen	**Site Datum:**	NAD1983 StatePlane Virginia N FIPS 4501 ft
Driller:	Eichelbergers, Inc. (C. Knaub)	**Ground Surface Elevation:**	281 ft amsl
Drilling Method:	Air Rotary	**Top Casing Elevation:**	280 ft amsl
Well Material:	PVC	**Start Date - End Date:**	21 July 2009 - 21 July 2009

Depth (feet)	Stratigraphy	Lithologic Description	Drilling Information: Drilling Notes	Drilling Information: Time	Drilling Information: Drilling Rate (ft/min)
0		ASPHALT		10:30 AM	NA
		SILT, some gravel, brown, moist			
5		SILTY SAND, light brown		10:33 AM	2.00
10		DIABASE, gray, dry		10:35 AM	3.50
15		Borehole depth 15.8 ft		10:36 AM	2.75

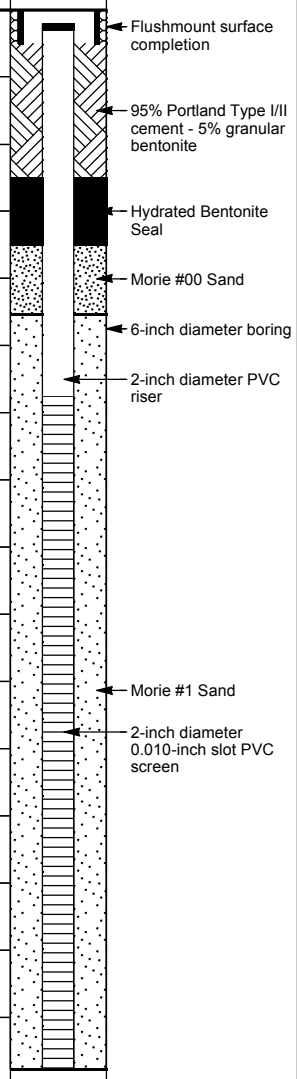

MASTER WELL CONSTRUCTION LOG PWS TR0265A ARC GAINESVILLE PWS.GPJ GEOSNTEC.GDT 11/25/09

Geosyntec consultants

Borehole No. SW SB-03

Borehole / Well Construction Log

Project No.:	TR0265A	**Location:**	Gainesville, Virginia
Client:	ARC Gainesville	**Coordinates:**	N 6,970,407 E 11,745,128
Logged By:	M. Lonardo-Roy	**Borehole Diameter:**	6-inch
Reviewed By:	E. Jensen	**Site Datum:**	NAD1983 StatePlane Virginia N FIPS 4501 ft
Driller:	Eichelbergers, Inc. (C. Knaub)	**Ground Surface Elevation:**	268 ft amsl
Drilling Method:	Air Rotary	**Top Casing Elevation:**	271 ft amsl
Well Material:	PVC	**Start Date - End Date:**	21 July 2009 - 21 July 2009

Depth (feet)	Stratigraphy	Lithologic Description	Drilling Information: Drilling Notes	Drilling Information: Time	Drilling Information: Drilling Rate (ft/min)
0		SILT, some sand, trace gravel, brown, moist		01:38 PM	NA
5		DIABASE, dry		01:40 PM	4.00
			Harder drilling	01:41 PM	1.00
15		Borehole depth 15.6 ft		01:47 PM	1.60

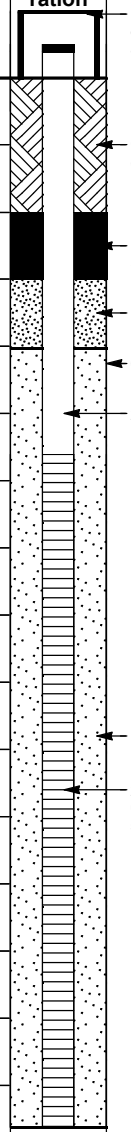

Log of Boring: SW TTU-03

Date Started: 07/18/06
Date Completed: 07/18/06
Total Depth (ft): 4.50
Boring Diameter (in): 8
Bedrock Depth (ft): N/A
Elevation (ft-msl): N/A
Remark:

Project Code: 1040A
Project Name: ARC - Gainesville
Drilled By: Eichelberger Drilling
Logged By: Andrew Applebaum
Drill Rig: CME 75
Drill Method: Hollow stem auger
Sampling Method: Split spoon

Depth	Sample Number	Sample Interval	Recovery (inches)	Blow Counts	PID Units	Lithological Description	Interpreted Lithology	Well Construction	Comments
0	1		23	2-7-13-29	0.0	SAPROLITE: brown, moist to dry. Spoon refusal at 4.5', hollow stem auger refusal at 5'.			Background air PID 0.0.
									Collected soil sample 0'-2' for laboratory analysis.
	2		22	27-34-43-48	0.0				Set 2" Sch. 40 PVC well at 5' with 0.01"-slot screen 5'-2' and casing 2'-+3'. #1 sand 5'-1.5', bentonite 1.5'-1',cement 1'-grade. Set stick-up casing.
	3		5	50/5"	0.0				
-5									
-10									

The following Boring Logs could not be located.

- DW-15
- DW-16
- DW-2
- DW-72B
- SW 212-01
- SW 28-41

GROUNDWATER MONITORING AND WELL REDUCTION PLAN

ATLANTIC RESEARCH CORPORATION RCRA CORRECTIVE ACTION SITE 5945 WELLINGTON ROAD GAINESVILLE, VIRGINIA 20155

Project No. 229931.0003

July 18, 2017

Prepared For:

Atlantic Research Corporation
c/o 300 Blaisdell Road
Orangeburg, New York

Prepared By:

TRC Environmental Corporation
11231 Cornell Park Drive
Cincinnati, Ohio 45242

TRC
Results you can rely on

TABLE OF CONTENTS

EXECUTIVE SUMMARY III

1.0 INTRODUCTION 1

2.0 BACKGROUND 1

3.0 GROUNDWATER MONITORING AND WELL REDUCTION PLAN 3

4.0 ADDITIONAL WELL ABANDONMENTS 4

5.0 SUMMARY 4

6.0 REFERENCES 5

List of Figures

1. Facility Location and Features
2. Sampling Locations – 2015 Plan - Deep
3. Sampling Locations – Proposed Plan - Deep
4. Sampling Locations – 2015 Plan - Shallow
5. Sampling Locations – Proposed Plan Shallow

List of Tables

1. Deep Groundwater Historical Results and Well Abandonment Rationale – Excluding Wells in Project Cub Area
2. Deep and Shallow Groundwater Historical Results and Well Abandonment Rationale – Project Cub Area
3. Shallow Groundwater Historical Results and Well Abandonment rationale – Excluding Wells in Project Cub Area
4. Surface Water Historical Results
5. Revised Sampling Plan

List of Appendices

A Well Abandonment Statement of Work

ACRONYMS

µg/L	micrograms per liter
111TCA	1,1,1-trichloroethane
112TCA	1,1,2-trichloroethane
11DCA	1,1-dichloroethane
12DCA	1,2-dichloroethane
11DCE	1,1-dichloroethene
ARC	Atlantic Research Corporation
COCs	constituents of concern
Geosyntec	Geosyntec Consultants Inc.
MCL	Maximum Contaminant Level
NDTS	Northern Deep Groundwater Treatment System
PCE	tetrachloroethene
PMWs	Performance Monitoring Wells
QAPP	Quality Assurance Project Plan
RCRA	Resource Conservation and Recovery Act
RSL	Regional Screening Level
TCE	trichloroethene
TRC	TRC Environmental Corporation
USEPA	United States Environmental Protection Agency
VISL	Vapor Intrusion Screening Level
VOCs	volatile organic compounds

EXECUTIVE SUMMARY

This Groundwater Monitoring and Well Reduction Plan (Plan) proposes modifications to ongoing groundwater monitoring and monitoring well reductions at the Atlantic Research Corporation (ARC) RCRA Corrective Action Site at 5945 Wellington Road in Gainesville, Virginia 20155 (Site) based on review of Site progress and ongoing monitoring needs.

The 2015 Sampling and Analysis Plan (2015 SAP) utilized 121 monitoring wells at the Site screened in shallow groundwater (62 total shallow monitoring wells; 33 for sampling and 29 for water levels only) and deep groundwater (59 total deep monitoring wells; 22 for sampling, 33 for water levels only, 2 for injection, and 2 off property). The proposed modifications would reduce the number of shallow wells to 21 (all to be sampled) and the number of deep wells to 29 (21 to be sampled, 6 for water levels only, and 2 for groundwater injection). Seventy-four (71) wells are proposed to be abandoned consisting of 41 shallow and 30 deep monitoring wells.

The Project Cub area represents a portion of the Site (see Figure 1) that is planned for near time re-development. The 2015 SAP utilized 26 monitoring wells within the Project Cub area consisting of 14 shallow and 12 deep monitoring wells. This Plan proposes to abandon 12 shallow and 7 deep monitoring wells and will retain 2 shallow and 5 deep monitoring wells within the Project Cub area.

All existing wells were evaluated for potential abandonment with respect to the objectives of the approved 2015 SAP and the need for continued water level measurements, if any. Each well was evaluated for redundancy with other well locations, based on geographic position, plume position, sampling depth and geology, and the constituents of concern (COCs) present in that well. The evaluation of all wells utilized the most recent sampling data for each well in addition to historical data.

In its evaluation TRC also considered the general presence of stable to decreasing COC concentrations across the Site, the proposed restriction against the use of groundwater underneath the Site, and planned requirement for vapor barriers installed during new construction as part of redevelopment process.

It is anticipated that this Plan (if approved) would be implemented in 2017 and continue until additional amendments are approved by USEPA in the future if warranted.

1.0 INTRODUCTION

This Groundwater Monitoring and Well Reduction Plan (Plan) presents the rationale for ongoing groundwater monitoring and monitoring well reductions at the Atlantic Research Corporation (ARC) RCRA Corrective Action Site at 5945 Wellington Road in Gainesville, Virginia 20155 (Site). The Site location is shown on Figure 1. It is anticipated that upon approval by EPA this Plan will be implemented in 2017 and continue until additional amendments are approved by USEPA in the future if warranted.

Dating back to the 1980s, approximately 520 wells or soil borings were developed in support of the RCRA Facility Investigations (RFI) at the Site, including the supplemental RFI conducted by Geosyntec, Inc. (SRFI; Geosyntech, 2009; 2012). Various interim measures were conducted in the 2000s and 2010s to address soil and groundwater conditions. Active remediation at the Northern Deep Treatment System (NDTS) to treat the deep groundwater zone is ongoing. Concentrations of key chemical constituents such as perchlorate and chlorinated solvents have been either stable or have decreased since at least 2009. Similarly, the concentrations of these chemicals have also been either stable or decreased in shallow groundwater since at least 2009. Surface water conditions have also been monitored and are consistently below screening levels. The Human Health Risk Assessment was approved by USEPA on October 16, 2016. In sum, it is clear that the Site is well understood and that the need for continued extensive monitoring is not warranted in the future.

2.0 BACKGROUND

Approximately 238 well or boring locations were abandoned by ARC during March-April 2017 following a well abandonment decision tree in Geosyntech's 2011 *Work Plan for 2011-2012 Groundwater Monitoring and Well Maintenance Activities* (2011 Work Plan), which started the transition from Supplemental RFI sampling to long-term monitoring of the NDTS. Approximately 161 additional well and soil boring locations are also considered abandoned and fall into three categories: a) 54 wells abandoned prior to 2013; b) 20 wells approved for abandonment that will be abandoned when accessible[1]; and c) 87 possible locations[2] approved for abandonment that have not been located in the field following a third search for these historical locations. The approved 2015 Sampling and Analysis Plan (2015 SAP) identifies monitoring requirements (i.e., sampling and/or water level measurements) for the remaining 121 wells at the Site, based on three primary objectives:

[1] This includes twenty wells that were closely grouped in a cluster or the same borehole with a well to be retained. These wells will be abandoned in the future to avoid damaging the retained well(s), when all wells at the location are ready for abandonment.

[2] The 87 possible well locations appear to include old geoprobe boring locations, temporary remediation monitoring points, and shallow monitoring wells in areas of past remediation efforts that were terminated prior to 2009. Location coordinates were not available for 46 of these points. Geosyntech and TRC searched for these locations at three separate times and it is presumed that the locations were abandoned soon after installation or at the conclusion of prior remediation efforts.

- Boundary monitoring using shallow and deep sentinel wells;
- Active remediation monitoring using deep source and performance wells (including water level measurements to verify capture); and
- Plume stability monitoring using shallow and deep source and performance wells.

The 121 wells in the 2015 SAP have been reviewed regarding ongoing long-term monitoring needs and potential abandonment relative to these objectives. The most recent sampling report, *Sampling and Analysis Report, Calendar Year 2016*, was submitted on March 29, 2017 and provides a current summary of results, groundwater flow, and evaluation of concentration trends. Annual 2017 groundwater monitoring was conducted in April 2017 and those results are now available and provided in the attached summary tables herein. These results and the factors listed below, were evaluated to reach TRC's proposal for the future groundwater monitoring network of shallow and deep monitoring wells at the Site presented herein:

- **Stable to Decreasing Concentration Trends:** Most of the wells sampled under the 2015 SAP exhibit stable to decreasing concentration trends at the wells where exceedance of the groundwater screening levels occur. Only one well showed an increasing trend based on data through 2016 (i.e., MW45-03S for cis-1,2-dichloroethene), which is a beneficial result of ongoing biodegradation. Plume stability is an underlying factor in considering all wells for abandonment.
- **Water Level Needs for Deep and Shallow Wells:** Deep groundwater flow determinations are used to verify capture, but are based on a subset of the deep wells, for which water levels are measured. Shallow water level measurements and groundwater flow determinations have been consistent under the 2015 SAP, but are not needed for active remediation purposes, which is not being conducted in this zone.
- **Groundwater Use Restriction as Part of Final Remedy:** It is understood that a groundwater use restriction will be part of the final remedy for the Site. As such, the potential potable water exposure pathway for the Site is considered closed relative to proposed abandonment. The primary potential potable exposure pathway would be off property and is monitored by sentinel wells on Site.
- **Vapor Barrier as Part of the Final Remedy:** As part of Site redevelopment, a vapor intrusion barrier will be installed for all new building construction at the Site. USEPA's Vapor Intrusion Screening Level (VISL) calculator was used to determine screening levels in groundwater at a 1×10^{-5} risk level (i.e., same risk level as potable pathway) for the potential vapor intrusion exposure pathway. Exceedances occur primarily due to PCE, TCE, and VC and are located at wells between and within 200 feet of the two main streams across the central part of the Site. 111TCA is exceeded at one shallow well (SW 5-04) in this same area. 112TCA, 12DCA, and 11DCE are exceeded at one deep well (DW-32I) and 11DCE is exceeded at two other deep wells (DW 76-01 and DW-72B) in the active remediation area between the streams at the northern part of the Site. Although the drinking water maximum contaminant level (MCL) used as the screening level for 11DCE is 7 ug/L (established more than 30 years ago), the toxicity assessment of 11DCE has changed since the establishment of its MCL such that a risk-based screening level would currently be 280 ug/L, based on residential tap water. 11DCE occurs in many wells across the Site, including two above the MCL

at the boundary, but only exceeds the risk-based level at three wells located in the active remediation area of the Site.

- **Redundancy:** Given stable to decreasing concentration trends across the Site, many wells that currently exceed MCL and VISL screening levels were installed as part of the Supplemental RCRA Facility Investigation (SRFI; Geosyntech, 2009) to determine extent, but are redundant for long-term monitoring purposes and are considered for abandonment. Detected constituents of concern (COCs), sampling depths, and groundwater flow information were reviewed as part of considering redundancy.

3.0 GROUNDWATER MONITORING AND WELL REDUCTION PLAN

Proposed groundwater monitoring and well abandonment is depicted in the following figures and tables.

- Figure 1 depicts the Site location and features.

Deep Groundwater

- Figure 2 shows the 2015 SAP locations for deep groundwater including wells that are sampled and those used only for water levels. Also depicted is the interior boundary indicating the Project Cub area on the eastern part of the Site.
- Figure 3 shows the deep wells proposed for continued sampling (blue) and/or water levels (green) and those proposed for abandonment (red).
- Tables 1 and 2 provide historical results for the deep groundwater monitoring wells and the proposed status or rationale for abandonment, as warranted, considering the discussion in Section 2.0. Table 2 focuses on Project Cub area wells.
- Please note that three wells that had been used only for water levels under the 2015 SAP (DW-23, DW-26I, and DW-28D) are now proposed for ongoing sampling as part of this re-evaluation of monitoring needs associated with the active remediation system. DW-23 and DW-26I provide coverage to the west and north in place of other nearby wells. DW-28D provides vertical coverage along with DW-28I near the extraction well (DW-13).

Shallow Groundwater

- Figure 4 shows the 2015 SAP locations for shallow groundwater including wells that are sampled and those used only for water levels. Also depicted is the interior boundary indicating the Project Cub area on the eastern part of the Site.
- Figure 5 shows the shallow wells proposed for continued sampling (blue) and those proposed for abandonment (red).
- Tables 2 and 3 provide historical results for the shallow groundwater monitoring wells and the proposed status or rationale for abandonment, as warranted, considering the discussion in Section 2.0. Table 2 focuses on Project Cub area wells.

Surface Water

- Table 4 provides historical results for the surface water sampling program and the rationale for removing location STR-02.

Revised Sampling and Analysis Plan

- Table 5 summarizes the revised sampling and analysis program incorporating the proposed well abandonments.

The deep wells that will be retained have been verified to be sufficient for monitoring groundwater elevations and demonstrating the effectiveness of the NDTS. One change is proposed to the surface water sampling program, which is the elimination of surface water location STR-02, which has been dry and unable to be sampled since 2012. Sampling procedures in the 2015 SAP will remain the same. Sampling frequency[3] will remain the same at the Site until conditions deem that a change in sampling frequency is justified.

Each well was evaluated regarding historical chemical data, trends, location, and usefulness in achieving the objectives of long-term monitoring given planned redevelopment of the Site (see Section 2.0). The rationale for the proposed well abandonments included review of COCs, groundwater flow, and sampling depths of nearby wells for cases in which redundant information is believed to be present.

4.0 ADDITIONAL WELL ABANDONMENTS

Based on the objectives and factors summarized in Section 2.0 and the proposed ongoing sampling program and additional well abandonments summarized in Section 3.0, seventy-one (71) of the 121 monitoring wells remaining on the Site are proposed for abandonment. TRC proposes that there be a total of 50 monitoring wells remaining at the Site consisting of 29 deep wells and 21 shallow wells. Within the Project Cub area, TRC's proposal retains 5 deep wells and 2 shallow wells. The remaining wells are believed to be sufficient to continue to fulfill monitoring objectives under the 2015 SAP (see Section 2.0).

Appendix A provides the scope of work for abandoning wells at the Site.

5.0 SUMMARY

This Groundwater Monitoring and Well Reduction Plan presents modifications to the 2015 SAP and additional wells for abandonment at the Atlantic Research Corporation RCRA Corrective Action Site in Gainesville, Virginia. This Plan considers the current conditions at the Site, the position of the Site in the corrective action process, and monitoring needs going forward to meet the monitoring objectives for the Site. It is anticipated that this plan would remain in effect until an amendment is appropriate based on the

[3] Sampling frequency is semi-annual for sentinel wells and DW-13 and annual for other wells that are sampled.

performance of the NDTS, changing site conditions, and/or Site re-development activities at the Site; at which time an amendment in the form of a letter would be prepared for USEPA approval that would reference this Plan, the 2015 SAP, and follow the procedures provided in Appendix A.

6.0 REFERENCES

Geosyntec Consultants, 2009, Draft *Final SRFI Report*, Atlantic Research Corporation Facility, Gainesville, Virginia, November 2009.

Geosyntec Consultants, 2011a, *Evaluation of Potential for Off-Site Migration of Contaminants in Groundwater and Surface Water*, Atlantic Research Corporation Facility, Gainesville, Virginia, December 23, 2011.

Geosyntec Consultants, 2011b. *Work Plan for 2011-2012 Groundwater Monitoring and Well Maintenance Activities*, Atlantic Research Corporation Facility, Gainesville, Virginia, 22 September 2011.

Geosyntec, 2012a, *2011 Annual Interim Measures (IM) Update Report*, Atlantic Research Corporation Facility, Gainesville, Virginia, July 2012.

Geosyntec, 2012b, *Addendum to the Final Supplemental Resource Conservation Recovery Act (RCRA) Facility Investigation (SRFI) Report*, Atlantic Research Corporation Facility, Gainesville, Virginia, October 10, 2012.

Integral Consulting, Inc., 2016, *Risk Assessment Update –Analysis and Evaluation of Perchlorate Persistence in Soil and Recalculation of Homegrown Produce Risks, Atlantic Research Corporation Facility*, Gainesville, Virginia, May 31, 2016.

TRC, 2014a, *Ground Water Monitoring Technical Memorandum No. 1, 2012-2013 Monitoring Results*, Atlantic Research Corporation Facility, Gainesville, Virginia, March, 2014.

TRC, 2014b, *Ground Water Monitoring Technical Memorandum No. 2, Spring 2014 Sampling Event*, Atlantic Research Corporation Facility, Gainesville, Virginia, August 26, 2014.

TRC, 2015a, *Ground Water Monitoring Technical Memorandum No. 3, Fall 2014 Sampling Event*, Atlantic Research Corporation Facility, Gainesville, Virginia, March 6, 2015.

TRC, 2015b, *Sampling and Analysis Plan*, Atlantic Research Corporation Facility, Gainesville, Virginia, July 9, 2015.

TRC, 2016, *Sampling and Analysis Report, Calendar Year 2015*, Atlantic Research Corporation Facility, Gainesville, Virginia, March 8, 2016.

TRC, 2017, *Sampling and Analysis Report, Calendar Year 2016*, Atlantic Research Corporation Facility, Gainesville, Virginia, March 29, 2017.

USEPA, 2015, *Approval Letter for TRC Sampling and Analysis Plan*, Atlantic Research Corporation Facility, Gainesville, Virginia, July 22, 2015.

USEPA, 2016, *Approval Letter for Human Health Risk Assessment*, Atlantic Research Corporation Facility, Gainesville, Virginia, July 22, 2015.

FIGURES

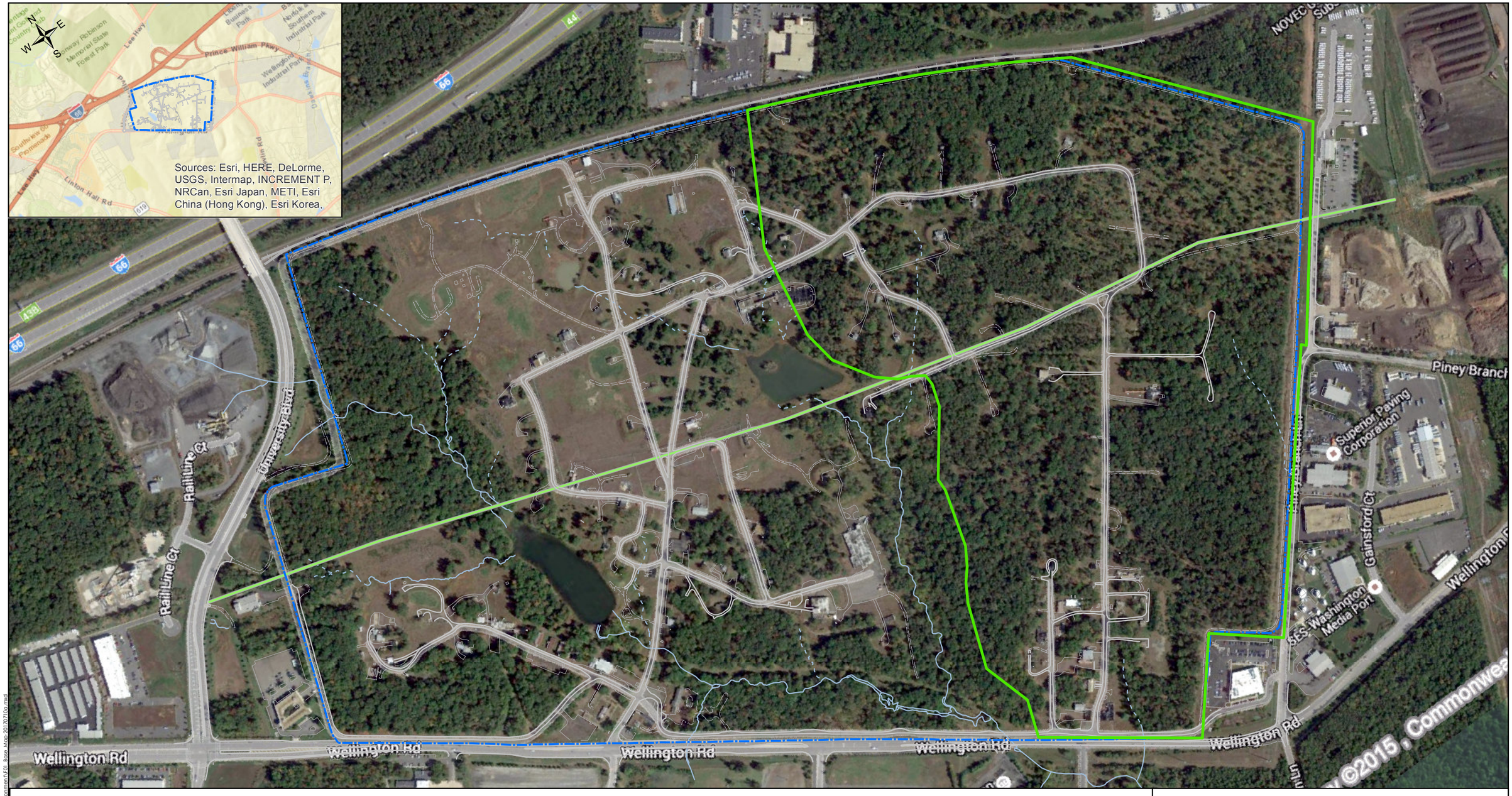

Site Features

- Approximate Project Cub Boundary (based on 06292017 survey pdf)
- Site Boundary
- Paved Road
- Unpaved Road
- Pavement
- Parking
- Railroad Track
- High Pressure Gas line
- Perennial Surface Water
- Ephemeral Surface Water

1,000 500 0 1,000 Feet

Site Location and Features

Atlantic Research Corporation, Gainesville, Virginia

TRC Environmental Inc.
11231 Cornell Park Drive
Cincinnati, Ohio 45242

Project: 229931.0000

7/12/2017

Figure 1

G:\GIS Projects\GIS_SEQUA\Gainesville\MXD\20150A Abandonment\F01 Base Map-20170710a.mxd

N

IW-8
IW-7
DW-6
DW-35 Zone 1
DW-36D
DW-36DD
DW-5
DW-25
DW-32I
BW 90-01
BW NE-01D
DW 85-01
DW-29S
DW-29D
DW-29I
BW-CM-03
DW-24
DW-72B
BW 78-11D
DW CM-01
BW 78-12D
DW-31D
DW-30S
DW-26S
IW-6
DW-22
DW-30I
DW-26I
DW 76-01
DW-26D
DW-30D
DW-28S
DW-72A
DW-28I
DW-28D
DW-23
DW-28DD
DW 106-01
DW-13
DW-10
DW-3
DW-16
DW 213-01
DW-15
IW-3
DW-20
DW-18
DW 52-01
DW-34
DW-14
DW-2
DW 68-01
DW-17
DW SB-01
DW-12
DW SB-02
DW 200-01

500 250 0 500
Feet

Legend

- 2015 Sampling Plan (VOC and Perchlorate)
- Not sampled recently. Maintained and/or used for water wevels since 2015 or earlier.
- Approximate Project Cub Boundary (based on 06292017 survey pdf)

Site Features

- Site Boundary
- Paved Road
- Unpaved Road
- Pavement
- Parking
- Railroad Track
- Tank
- Building
- Former Building
- Perennial Surface Water
- Ephemeral Surface Water
- Wetland
- Pond

Note:
Due to the wells being clustered closely together, some wells are shown with one symbol. See tables for details of status for these wells.

Sampling Locations - 2015 Plan - Deep

Atlantic Research Corporation, Gainesville, Virginia

TRC Environmental Inc.
11231 Cornell Park Drive
Cincinnati, Ohio 45242

Project: 229931.0000-03

7/6/2017

Figure 2

\\Cincinnatifp2\Data\GIS Projects\GIS_SEQUA\Gainesville\MXD\20150.4_Abandonment\F02_Smmp_Loc_Deep_20170705a.mxd

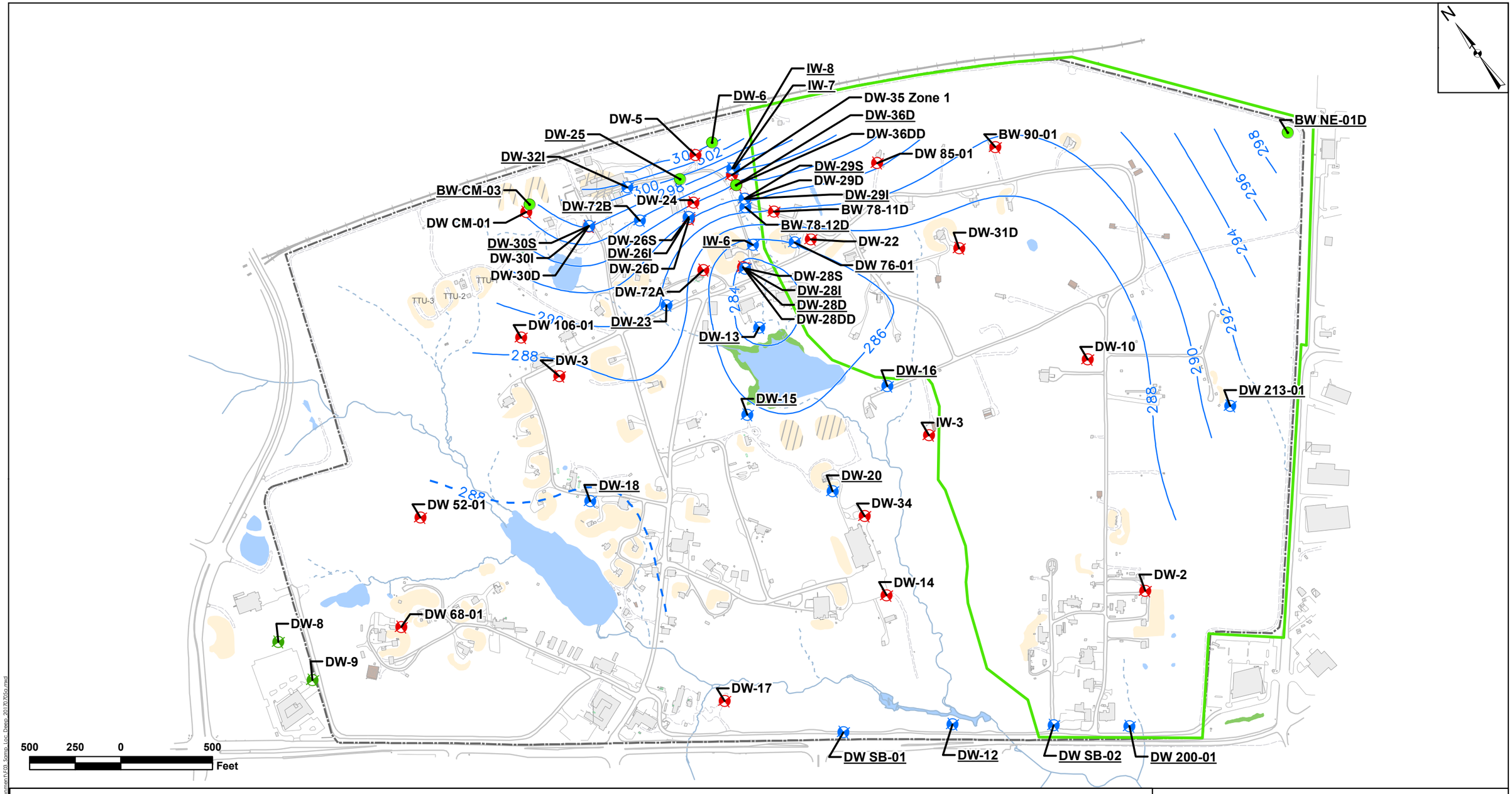

Legend

- Retain and Sample
- Retain for Water Levels
- Abandon
- Off-Site Wells To Be Abandoned
- Approximate Project Cub Boundary (based on 06292017 survey pdf)
- Water Level Contour
- Water Level Contour (Approximate)

Site Features

- Site Boundary
- Paved Road
- Unpaved Road
- Pavement
- Parking
- Railroad Track
- Tank
- Building
- Former Building
- Berm
- Historic Burn Area /TTU
- Perennial Surface Water
- Ephemeral Surface Water
- Wetland
- Pond

Notes:

Water Level Contours from 2016 Sampling and Analysis Report Figure 2 (March 29, 2017).
Water levels gauged March 28-29, 2016.
NDTS pump at DW-13 was currently active and pumping.
NM = Not Measured
Artesian Wells indicate that water level is greater than the top of casing.
Groundwater Elevations in Feet above mean sea level

Due to the wells being clustered closely together, some wells are shown with one symbol. See tables for details of status for these wells. Wells to be retained have label underlined.

Sampling Locations - Proposed Plan - Deep

Atlantic Research Corporation, Gainesville, Virginia

TRC Environmental Inc.
11231 Cornell Park Drive
Cincinnati, Ohio 45242

Project: 229931.0000-03

7/10/2017

Figure 3

G:\GIS_Projects\GIS_SEQUA\Grainesville\MXD\201504_Abandonment\F03_Samp_Loc_Dprop_20170705p.mxd

N

BW NE-01S
SW CM-05
BW 86-01
BW 93-01
DW-31I
BW CM-01S
BW 100-02S
SW 70-01
SW 115-01S
SW TTU-03
BW TTU-05
SW TTU-05
TTU-1
TTU-2
TTU-3
SW 74-02
BW 79-02S
BW 116-01
BW 217-01
BW CG-01D
BW TTU-03D
SW 105-01
BW 73-01S
SW 74-07
SW 74-06
SW 105-03D
SW 42-02
BW 119-01
BW 34-01
BW 14-02S
BW 45-03S
SW 40-51
BW 237-01D
BW 5-06D
BW 40-04
BW 31-01S
BW 16-04D
SW 40-07A
SW 35-01S
SW 40-06
SW 5-04
SW 15-02
SW 40-57
BW 5-05S
BW 28-02S
SW 46-01
SW 204-01
BW 68-01
BW 21-04D
BW 46-02
BW 28-04D
SW 47-02
BW 225-01
SW 28-41
SW 222-02
SW 152-01
SW 47-05
BW 212-01
BW 200-01
SW SB-03
SW SB-01
SW SB-02
SW PBS-01
SW 212-01
SW 200-02

500 250 0 500
Feet

Legend

- 2015 Sampling Plan (VOC and Perchlorate)
- Not sampled recently. Maintained and/or used for water wevels since 2015 or earlier.
- Approximate Project Cub Boundary (based on 06292017 survey pdf)

Site Features

- Site Boundary
- Paved Road
- Unpaved Road
- Pavement
- Parking
- Railroad Track
- Tank
- Building
- Former Building
- Berm
- Historic Burn Area /TTU
- Perennial Surface Water
- Ephemeral Surface Water
- Wetland
- Pond

Sampling Locations - 2015 Plan - Shallow

Atlantic Research Corporation, Gainesville, Virginia

TRC Environmental Inc.
11231 Cornell Park Drive
Cincinnati, Ohio 45242

Project: 229931.0000-03

7/6/2017

Figure 4

\\Cincinnatifile2\Data\GIS Projects\GIS_SEQUA\Gainesville\MXD\20150\4_Abandonment\F04_Smp_Loc_Shallow_20170705o.mxd

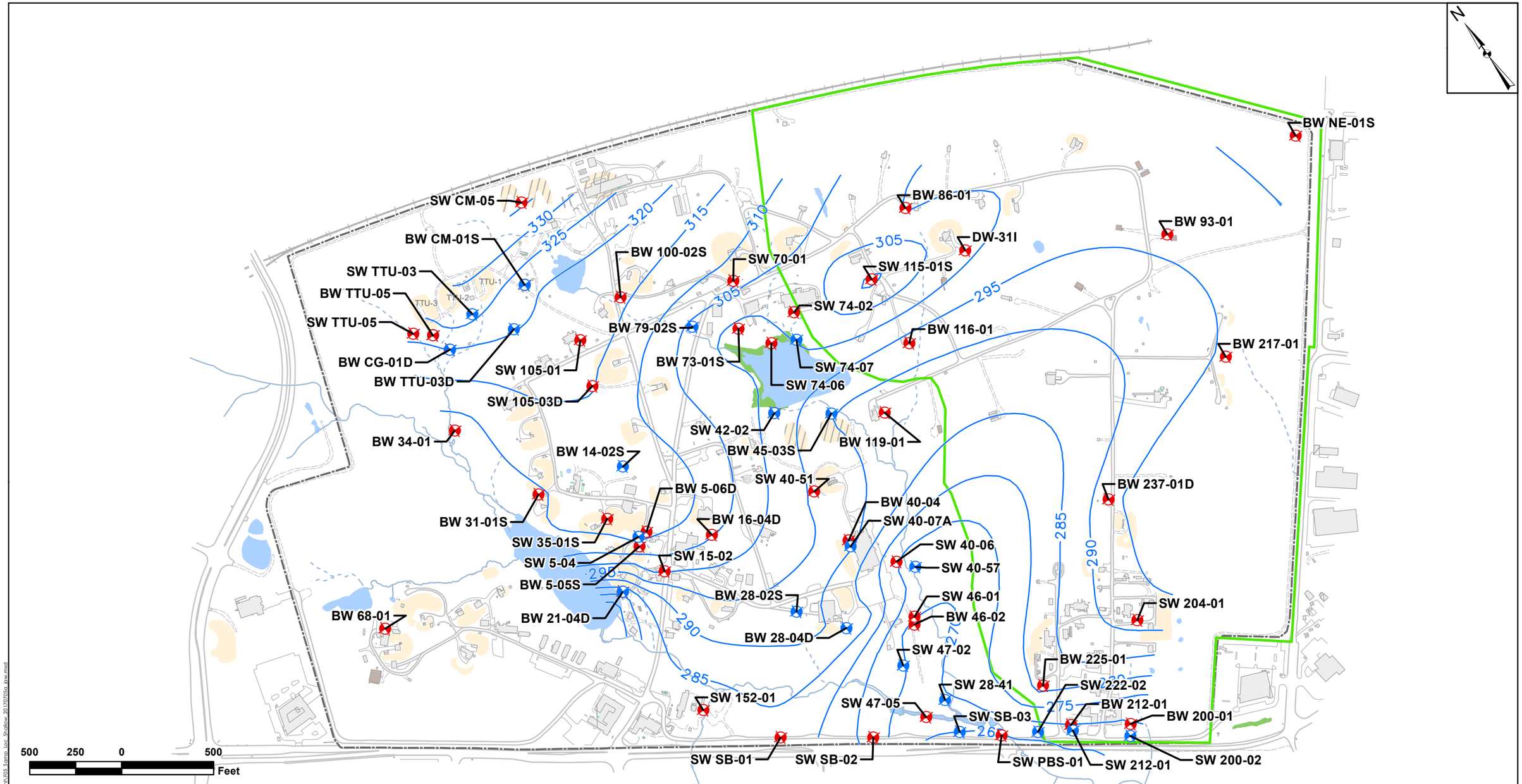

Legend

- Retain and Sample
- Abandon
- Water Level Contour (Approximate) from 2016 Sampling and Analysis Report Figure 3. Gauged 3/28/2016-2/2/2016.
- Approximate Project Cub Boundary (based on 06292017 survey pdf)

Site Features

- Site Boundary
- Paved Road
- Unpaved Road
- Pavement
- Parking
- Railroad Track
- Tank
- Building
- Former Building
- Berm
- Historic Burn Area /TTU
- Perennial Surface Water
- Ephemeral Surface Water
- Wetland
- Pond

Sampling Locations - Proposed Plan - Shallow

Atlantic Research Corporation, Gainesville, Virginia

TRC Environmental Inc.
11231 Cornell Park Drive
Cincinnati, Ohio 45242

Figure 5

Project: 229931.0000-03 | **7/18/2017**

TABLES

Table 1 - Deep Groundwater Historical Results and Well Abandonment Rationale
Excluding Wells in Project Cub Area

Aquifer	Location	Date Sampled	Matrix	Perchlorate µg/L	111TCA µg/L	112TCA µg/L	11DCA µg/L	12DCA µg/L	11DCE µg/L	PCE µg/L	TCE µg/L	cis-12DCE µg/L	VC µg/L	14Dioxane µg/L	Benzene µg/L	Rationale*	Sample Depth
Screening Levels (SLs):				15	200	5	140	5	7	5	5	70	2	7.8	5		(ft)
Deep	BW 78-12D	3/3/2005	GW	1380												Retain and Sample	14
Deep	BW 78-12D	5/11/2006	GW	62000													
Deep	BW 78-12D	11/16/2006	GW	27000													
Deep	BW 78-12D	10/4/2007	GW	250000	0.8 U	0.8 U	1 U	1 U	5	2 J	1 U	0.8 U	1 U		0.5 U		
Deep	BW 78-12D	6/5/2008	GW	13000	5 UJ	5 UJ	5 UJ	5 UJ	1.1 J	5 UJ	5 UJ	5 UJ	5 UJ		5 UJ		
Deep	BW 78-12D	10/13/2009	GW	32000	0.8 U	0.8 U	1 U	1 U	0.8 U	0.8 U	1 U	0.8 U	1 U	70 U	0.5 U		
Deep	BW 78-12D	3/30/2010	GW	7200	0.8 U	0.8 U	1 U	1 U	0.8 U	0.8 U	1 U	0.8 U	1 U	70 U	0.5 U		
Deep	BW 78-12D	9/7/2011	GW	13000													
Deep	BW 78-12D	5/14/2012	GW	5700													
Deep	BW 78-12D	5/22/2013	GW	28000													
Deep	BW 78-12D	5/15/2014	GW	40000													
Deep	BW 78-12D	5/14/2015	GW	17000	0.5 U	0.5 U	0.5 U	0.5 U	2	0.5 J	0.5 U	0.5 U	0.5 U		0.5 U		
Deep	BW 78-12D	4/1/2016	GW	21000	0.5 U	0.5 U	0.5 U	0.5 U	2	0.8 J	0.5 U	0.5 U	0.5 U		0.5 U		
Deep	BW 78-12D	4/20/2017	GW	16000	0.5 U	0.5 U	0.5 U	0.5 U	0.5 U	0.7 J	0.5 U	0.5 U	0.5 U		0.5 U		
Deep	BW CM-03	8/20/2008	GW	48 J	0.8 U	0.8 U	1 U	1 U	0.8 U	0.8 U	1 U	0.8 U	1 U	70 U	0.5 U	Retain for Water levels: exceeded SL for perchlorate only, when last sampled in 2014, with stable to decreasing trend	50
Deep	BW CM-03	8/5/2009	GW	41	0.8 U	0.8 U	1 U	1 U	0.8 U	0.8 U	1 U	0.8 U	1 U	70 U	0.5 U		
Deep	BW CM-03	3/24/2010	GW	41	0.8 U	0.8 U	1 U	1 U	0.8 U	0.8 U	1 U	0.8 U	1 U	70 U	0.5 U		
Deep	BW CM-03	3/24/2010	GW	40	0.8 U	0.8 U	1 U	1 U	0.8 U	0.8 U	1 U	0.8 U	1 U	70 U	0.5 U		
Deep	BW CM-03	9/12/2011	GW	58													
Deep	BW CM-03	4/2/2012	GW	26													
Deep	BW CM-03	5/30/2013	GW	32	0.8 U	0.8 U	1 U	1 U	0.8 U	0.8 U	1 U	0.8 U	1 U		0.5 U		
Deep	BW CM-03	5/15/2014	GW	34													
Deep	DW SB-01	9/4/2009	GW	2 U	0.8 U	0.8 U	1 U	1 U	0.8 U	0.8 U	1 U	0.8 U	1 U	70 U	0.5 U	Retain and Sample - Sentinel Well	Artesian
Deep	DW SB-01	3/24/2010	GW	2 U	0.8 U	0.8 U	1 U	1 U	0.8 U	0.8 U	1 U	0.8 U	1 U	70 U	0.5 U		
Deep	DW SB-01	9/1/2011	GW	0.2 U	0.8 U	0.8 U	1 U	1 U	0.8 U	0.8 U	1 U	0.8 U	1 U	0.056 UJ	0.5 U		
Deep	DW SB-01	5/7/2012	GW	0.2 U	0.8 U	0.8 U	1 U	1 U	0.8 U	0.8 U	1 U	0.8 U	1 U		0.5 U		
Deep	DW SB-01	5/7/2012	GW	0.2 U	0.8 U	0.8 U	1 U	1 U	0.8 U	0.8 U	1 U	0.8 U	1 U		0.5 U		
Deep	DW SB-01	5/28/2013	GW	1 U	0.8 U	0.8 U	1 U	1 U	0.8 U	0.8 U	1 U	0.8 U	1 U	0.14 j	0.5 U		
Deep	DW SB-01	11/18/2013	GW	0.2 U	0.8 U	0.8 U	1 U	1 U	0.8 U	0.8 U	1 U	0.8 U	1 U	70 U	0.5 U		
Deep	DW SB-01	5/19/2014	GW	1 U	0.5 U	0.5 U	0.5 U	0.5 U	0.5 U	0.5 U	0.5 U	0.5 U	0.5 U	0.11	0.5 U		
Deep	DW SB-01	5/13/2015	GW	0.2 U	0.5 U	0.5 U	0.5 U	0.5 U	0.5 U	0.5 U	0.5 U	0.5 U	0.5 U		0.5 U		
Deep	DW SB-01	11/6/2015	GW	0.2 U	0.5 U	0.5 U	0.5 U	0.5 U	0.5 U	0.5 U	0.5 U	0.5 U	0.5 U		0.5 U		
Deep	DW SB-01	3/29/2016	GW	0.2 U	0.5 U	0.5 U	0.5 U	0.5 U	0.5 U	0.5 U	0.5 U	0.5 U	0.5 U		0.5 U		
Deep	DW SB-01	10/27/2016	GW	0.2 U	0.5 U	0.5 U	0.5 U	0.5 U	0.5 U	0.5 U	0.5 U	0.5 U	0.5 U		0.5 U		
Deep	DW SB-01	10/27/2016	GW	0.2 U	0.5 U	0.5 U	0.5 U	0.5 U	0.5 U	0.5 U	0.5 U	0.5 U	0.5 U		0.5 U		
Deep	DW SB-01	4/18/2017	GW	0.2 U	0.5 U	0.5 U	0.5 U	0.5 U	0.5 U	0.5 U	0.5 U	0.5 U	0.5 U		0.5 U		
Deep	DW-6	6/4/2008	GW	6.2												Retain for Water Levels - below SLs for >3 years	110
Deep	DW-6	10/19/2009	GW	7.1	0.8 U	0.8 U	1 U	1 U	0.8 U	0.8 U	1 U	0.8 U	1 U	70 U	0.5 U		
Deep	DW-6	3/19/2010	GW	7.1	0.8 U	0.8 U	1 U	1 U	0.8 U	0.8 U	1 U	0.8 U	1 U	70 U	0.5 U		
Deep	DW-6	9/6/2011	GW		0.8 U	0.8 U	2 J	1 U	0.8 U	0.8 U	1 U	0.8 U	1 U		0.5 U		
Deep	DW-6	5/13/2014	GW		0.5 U	0.5 U	2	0.5 U	0.5 U	1	0.5 U	0.5 U	0.5 U		0.5 U		

Table 1 - Deep Groundwater Historical Results and Well Abandonment Rationale
Excluding Wells in Project Cub Area

Aquifer	Location	Date Sampled	Matrix	Perchlorate µg/L	111TCA µg/L	112TCA µg/L	11DCA µg/L	12DCA µg/L	11DCE µg/L	PCE µg/L	TCE µg/L	cis-12DCE µg/L	VC µg/L	14Dioxane µg/L	Benzene µg/L	Rationale*	Sample Depth
Screening Levels (SLs):				15	200	5	140	5	7	5	5	70	2	7.8	5		(ft)
Deep	DW-12	5/16/2002	GW		1 U	1 U	1 U	1 U	1 U	1 U	1 U	1 U	1 U				
Deep	DW-12	11/5/2002	GW		1 U	1 U	1 U	1 U	1.6	1 U	1 U	1 U	1 U				
Deep	DW-12	2/13/2003	GW		1 UJ	1 UJ	1 UJ	1 UJ	2.2 J	1 UJ	1 UJ	1 UJ	1 UJ				
Deep	DW-12	5/21/2003	GW	4 U	1 U	1 U	1 U	1 U	2.3	4.1	1 U	1 U	1 U				
Deep	DW-12	5/21/2003	GW	2 U													
Deep	DW-12	11/22/2003	GW	4 U	1 U	1 U	1	1 U	3.3	1	1 U	1 U	1 U				
Deep	DW-12	3/25/2004	GW	2.6 U	0.8 U	0.8 U	1 J	1 U	4 J	2 J	1 U	0.8 U	1 U		0.5 U		
Deep	DW-12	5/9/2005	GW	0.7 U	0.8 U	0.8 U	2 J	1 U	5	2 J	1 U	0.8 U	1 U		0.5 U		
Deep	DW-12	11/22/2005	GW	2.3 J	0.8 U	0.8 U	2 J	1 U	7	2 J	1 U	0.8 U	1 U		0.5 U		
Deep	DW-12	5/10/2006	GW	6	0.8 U	0.8 U	2 J	1 U	10	2 J	1 U	0.8 U	1 U		0.5 U		
Deep	DW-12	11/16/2006	GW	2 U	0.8 U	0.8 U	1 J	1 U	7	1 J	1 U	0.8 U	1 U		0.5 U		
Deep	DW-12	9/28/2007	GW	0.2 U	0.8 U	0.8 U	3 J	1 U	12	2 J	1 U	0.8 U	1 U		0.5 U		
Deep	DW-12	5/13/2008	GW	1 U	5 UJ	5 UJ	2 J	5 UJ	7.2 J	1.6 J	5 UJ	5 UJ	5 UJ		5 UJ		
Deep	DW-12	10/5/2009	GW	0.2 U	0.8 U	0.8 U	2 J	1 U	7	0.8 U	1 U	0.8 U	1 U	70 U	0.5 U		
Deep	DW-12	11/24/2009	GW	0.2 U	0.8 U	0.8 U	2 J	1 U	8	1 J	1 U	0.8 U	1 U	70 U	0.5 U		
Deep	DW-12	2/3/2010	GW	2 U	0.8 U	0.8 U	2 J	1 U	8	1 J	1 U	0.8 U	1 U	70 U	0.5 U		
Deep	DW-12	4/7/2010	GW	2 U	0.8 U	0.8 U	2 J	1 U	7	1 J	1 U	0.8 U	1 U	70 U	0.5 U		
Deep	DW-12	6/16/2010	GW	2 U	0.8 U	0.8 U	2 J	1 U	7	1 J	1 U	0.8 U	1 U	70 U	0.5 U	Retain and Sample - Sentinel Well	Artesian
Deep	DW-12	8/10/2010	GW	0.2 U	0.8 U	0.8 U	2 J	1 U	7	0.8 J	1 U	0.8 U	1 U	70 U	0.5 U		
Deep	DW-12	11/10/2010	GW		0.8 U	0.8 U	2 J	1 U	7	1 J	1 U	0.8 U	1 U	70 U	0.5 U		
Deep	DW-12	4/5/2011	GW		0.8 U	0.8 U	2 J	1 U	7	0.8 U	1 U	0.8 U	1 U	70 U	0.5 U		
Deep	DW-12	9/1/2011	GW	0.2 U	0.8 U	0.8 U	2 J	1 U	8	0.8 J	1 U	0.8 U	1 U	0.11 J	0.5 U		
Deep	DW-12	12/12/2011	GW		0.8 U	0.8 U	2 J	1 U	7	0.8 U	1 U	0.8 U	1 U		0.5 U		
Deep	DW-12	5/1/2012	GW	0.2 U	0.8 U	0.8 U	2 J	1 U	8	0.8 U	1 U	0.8 U	1 U		0.5 U		
Deep	DW-12	11/7/2012	GW		0.8 U	0.8 U	2 J	1 U	8	0.8 U	1 U	0.8 U	1 U		0.5 U		
Deep	DW-12	5/21/2013	GW	1 U	0.8 U	0.8 U	2 Jj	1 U	7 j	0.8 U	1 U	0.8 U	1 U	0.18 j	0.5 U		
Deep	DW-12	11/18/2013	GW	0.2 U	0.8 U	0.8 U	2 J	1 U	7	0.8 U	1 U	0.8 U	1 U	70 U	0.5 U		
Deep	DW-12	5/18/2014	GW	1 U	0.5 U	0.5 U	2	0.5 U	7	0.7 J	0.5 U	0.5 U	0.5 U	0.18	0.5 U		
Deep	DW-12	5/18/2014	GW	1 U	0.5 U	0.5 U	2	0.5 U	7	0.7 J	0.5 U	0.5 U	0.5 U	0.18	0.5 U		
Deep	DW-12	11/11/2014	GW		0.5 U	0.5 U	2	0.5 U	6	0.5 J	0.5 U	0.5 U	0.5 U		0.5 U		
Deep	DW-12	5/12/2015	GW	0.2 U	0.5 U	0.5 U	2	0.5 U	7	0.6 J	0.5 U	0.5 U	0.5 U	0.26 u	0.5 U		
Deep	DW-12	11/5/2015	GW	0.2 U	0.5 U	0.5 U	3	0.5 U	11	1	0.6 J	0.5 U	0.5 U		0.5 U		
Deep	DW-12	3/30/2016	GW	0.2 U	0.5 U	0.5 U	3	0.5 U	10	1	0.5 J	0.5 U	0.5 U	0.28	0.5 U		
Deep	DW-12	10/26/2016	GW	0.2 U	0.5 U	0.5 U	3	0.5 U	9	1 J	0.5 J	0.5 U	0.5 U		0.5 U		
Deep	DW-12	4/18/2017	GW	0.2 U	0.5 U	0.5 U	2	0.5 U	7	0.8 J	0.5 U	0.5 U	0.5 U	0.2	0.5 U		
Deep	DW-13	11/19/2002	GW		190	1 U	12.6	1 U	155	192	1 U	1 U	1 U				
Deep	DW-13	5/7/2003	GW											7.9			
Deep	DW-13	6/11/2003	GW	2230													
Deep	DW-13	2/18/2004	GW	1880	270	0.8 U	20	1 U	290	85	1 J	0.8 U	1 U		0.5 U		
Deep	DW-13	4/6/2004	GW	1490	260	0.8 U	20	1 U	300	110	1 U	0.8 U	1 U		0.5 U		
Deep	DW-13	4/20/2004	GW											4 J		Retain and Sample - Extraction Well	Sample Port
Deep	DW-13	5/13/2004	GW	1740	370	0.8 U	21	1 U	450	150	1 J	0.8 U	1 U		0.5 U		
Deep	DW-13	7/15/2004	GW	10700	400	0.8 U	34	1 U	430	230	1 J	0.8 U	1 U		0.5 U		
Deep	DW-13	8/19/2004	GW	7160	310	0.8 U	23	1 U	360	140	1 U	0.8 U	1 U		0.5 U		
Deep	DW-13	9/13/2004	GW	6780	280	0.8 U	22	1 U	220	120	1 J	0.8 U	1 U		0.5 U		
Deep	DW-13	10/25/2004	GW	6170	0.8 U	0.8 U	1 U	1 U	0.8 U	0.8 U	1 U	0.8 U	1 U		0.5 U		
Deep	DW-13	11/10/2004	GW	7530	230	0.8 U	19	1 U	280	100	1 U	0.8 U	1 U		0.5 U		

Table 1 - Deep Groundwater Historical Results and Well Abandonment Rationale
Excluding Wells in Project Cub Area

Aquifer	Location	Date Sampled	Matrix	Perchlorate µg/L	111TCA µg/L	112TCA µg/L	11DCA µg/L	12DCA µg/L	11DCE µg/L	PCE µg/L	TCE µg/L	cis-12DCE µg/L	VC µg/L	14Dioxane µg/L	Benzene µg/L	Rationale*	Sample Depth
Screening Levels (SLs):				15	200	5	140	5	7	5	5	70	2	7.8	5		(ft)
Deep	DW-13	12/14/2004	GW	7120	340	0.8 U	30	1 U	400	170	2 J	0.8 U	1 U		0.5 U		
Deep	DW-13	1/13/2005	GW	6940	260	0.8 U	23	1 U	310	160	1 J	0.8 U	1 U		0.5 U		
Deep	DW-13	2/16/2005	GW	4750	300	0.8 U	22	1 U	290	130	1 J	0.8 U	1 U		0.5 U		
Deep	DW-13	3/17/2005	GW	4120	300	0.8 U	19	1 U	270	110	1 J	0.8 U	1 U		0.5 U		
Deep	DW-13	4/14/2005	GW	4160	230	0.8 U	22	1 U	240	110	1 J	0.8 U	1 U		0.5 U		
Deep	DW-13	5/10/2005	GW	4020	260	0.8 U	20	1 U	290	85	1 U	0.8 U	1 U		0.5 U		
Deep	DW-13	6/18/2005	GW		280	0.8 U	23	1 U	300	130	1 U	0.8 U	1 U		0.5 U		
Deep	DW-13	7/25/2005	GW		220	0.8 U	18	1 U	240	98	1 U	0.8 U	1 U		0.5 U		
Deep	DW-13	9/21/2005	GW		460	0.8 J	38	1 U	510	50	1 U	0.8 U	1 U		0.5 U		
Deep	DW-13	10/26/2005	GW	5000	200	0.8 U	16	1 U	270	78	1 U	0.8 U	1 U		0.5 U		
Deep	DW-13	11/29/2005	GW	6600	370	0.8 U	29	1 U	410	72	1 U	0.8 U	1 U		0.5 U		
Deep	DW-13	12/13/2005	GW	5000	260	0.8 U	19	1 U	240	100	1 U	0.8 U	1 U		0.5 U		
Deep	DW-13	1/3/2006	GW	3500	240	0.8 U	19	1 U	270	88	1 U	0.8 U	1 U		0.5 U		
Deep	DW-13	2/15/2006	GW	1300	110	0.8 U	13	1 U	200	68	1 U	0.8 U	1 U		0.5 U		
Deep	DW-13	3/6/2006	GW	2200	87	0.8 U	12	1 U	120	62	1 U	0.8 U	1 U		0.5 U		
Deep	DW-13	4/25/2006	GW	2200	110	0.8 U	13	1 U	190	59	1 U	0.8 U	1 U		0.5 U		
Deep	DW-13	5/12/2006	GW	4100	110	0.8 U	14	1 U	180	71	1 U	0.8 U	1 U		0.5 U		
Deep	DW-13	7/31/2006	GW	8700	170	0.8 U	18	1 U	290	110	1 U	0.8 U	1 U		0.5 U		
Deep	DW-13	8/16/2006	GW	4600	140	0.8 U	16	1 U	230	75	1 U	0.8 U	1 U		0.5 U		
Deep	DW-13	9/21/2006	GW	4200	130	0.8 U	15	1 U	270	80	1 J	0.8 U	1 U		0.5 U		
Deep	DW-13	10/26/2006	GW	5800	150	0.8 U	18	1 U	280	87	1 J	0.8 U	1 U		0.5 U		
Deep	DW-13	11/13/2006	GW	3800	120	0.8 U	13	1 U	230	88	1 U	0.8 U	1 U		0.5 U		
Deep	DW-13	4/20/2007	GW	14000	180	0.8 U	19	1 U	230	130	1 J	0.8 U	1 U		0.5 U	Retain and Sample - Extraction Well	Sample Port
Deep	DW-13	5/2/2007	GW	8900	160	0.8 U	17	1 U	250	97	1 J	0.8 U	1 U		0.5 U		
Deep	DW-13	5/16/2007	GW	4700	130	0.8 U	14	1 U	260	82	1 U	0.8 U	1 U		0.5 U		
Deep	DW-13	6/5/2007	GW	4500	110	0.8 U	13	1 U	280	74	1 U	0.8 U	1 U		0.5 U	(cont.)	(cont.)
Deep	DW-13	6/12/2007	GW	3800	140	0.8 U	15	1 U	290	79	1 U	0.8 U	1 U		0.5 U		
Deep	DW-13	6/26/2007	GW	5000	150 J	0.8 UJ	16 J	1 UJ	210 J	95 J	1 J	0.8 UJ	1 UJ		0.5 UJ		
Deep	DW-13	7/13/2007	GW	4200	110	0.8 U	13	1 U	250	66	1 U	0.8 U	1 U		0.5 U		
Deep	DW-13	7/24/2007	GW	4100	110 R	0.8 UR	14 R	1 UR	220 R	60 R	1 UR	0.8 UR	1 UR		0.5 UR		
Deep	DW-13	8/7/2007	GW	4600	110 R	0.8 UR	14 R	1 UR	230 R	69 R	1 R	0.8 UR	1 UR		0.5 UR		
Deep	DW-13	9/19/2007	GW	4400	110	0.8 U	14	1 U	230	72	1 J	0.8 U	1 U		0.5 U		
Deep	DW-13	10/4/2007	GW	5800	150	0.8 U	14	1 U	240	73	1 J	0.8 U	1 U		0.5 U		
Deep	DW-13	10/15/2007	GW	12000	300	0.8 U	36	1 U	550	100	2 J	0.8 U	1 U		0.5 U		
Deep	DW-13	11/1/2007	GW	13000	260 J	0.8 U	32	1 U	440	85	2 J	0.8 U	1 U		0.5 U		
Deep	DW-13	11/14/2007	GW	9200	240	0.8 U	25	1 U	430	88	2 J	0.8 U	1 U		0.5 U		
Deep	DW-13	11/27/2007	GW	7100	180	0.8 U	20	1 U	280	85	1 J	0.8 U	1 U		0.5 U		
Deep	DW-13	12/11/2007	GW	5900	110	0.8 U	14	1 U	250	63	1 J	0.8 U	1 U		0.5 U		
Deep	DW-13	12/28/2007	GW	16000	240	0.8 U	23	1 U	350	83	1 J	0.8 U	1 U		0.5 U		
Deep	DW-13	1/9/2008	GW	6200	120	0.8 U	16	1 U	240	62	1 J	0.8 U	1 U	70 U	0.5 U		
Deep	DW-13	2/7/2008	GW	4400	100	0.8 U	14	1 U	240	70	1 J	0.8 U	1 U		0.5 U		
Deep	DW-13	3/4/2008	GW	7400	170	0.8 U	19	1 U	300	98	2 J	0.8 U	1 U		0.5 U		
Deep	DW-13	3/18/2008	GW	9900	230	0.8 U	25	1 U	350	110	2 J	0.8 J	1 U		0.5 U		
Deep	DW-13	4/3/2008	GW	3000	140	0.8 U	15	1 U	290	88	1 J	0.8 U	1 U		0.5 U		
Deep	DW-13	4/17/2008	GW	8000	110	0.8 U	15	1 U	270	88	2 J	0.8 U	1 U	70 U	0.5 U		
Deep	DW-13	5/1/2008	GW	2600	110 J	0.8 UJ	16 J	1 UJ	240 J	74 J	1 J	0.8 UJ	1 UJ		0.5 UJ		
Deep	DW-13	5/15/2008	GW	4400	100 J	50 UJ	50 UJ	50 UJ	170 J	70 J	50 UJ	50 UJ	50 UJ		50 UJ		

Table 1 - Deep Groundwater Historical Results and Well Abandonment Rationale
Excluding Wells in Project Cub Area

Aquifer	Location	Date Sampled	Matrix	Perchlorate µg/L	111TCA µg/L	112TCA µg/L	11DCA µg/L	12DCA µg/L	11DCE µg/L	PCE µg/L	TCE µg/L	cis-12DCE µg/L	VC µg/L	14Dioxane µg/L	Benzene µg/L	Rationale*	Sample Depth
Screening Levels (SLs):				15	200	5	140	5	7	5	5	70	2	7.8	5		(ft)
Deep	DW-13	5/28/2008	GW	4000	85 J	50 UJ	12 J	50 UJ	180 J	67 J	50 UJ	50 UJ	50 UJ		50 UJ		
Deep	DW-13	6/11/2008	GW	4300	84 J	50 UJ	12 J	50 UJ	200 J	67 J	50 UJ	50 UJ	50 UJ		50 UJ		
Deep	DW-13	6/26/2008	GW	5400 J	98	0.8 U	14	1 U	250	75	2 J	0.8 U	1 J	70 U	0.5 U		
Deep	DW-13	7/10/2008	GW	4700	95	0.8 U	14	1 U	260	63	2 J	0.8 U	1 J	70 U	0.5 U		
Deep	DW-13	7/24/2008	GW	23000	170	0.8 U	21	1 U	310	88	3 J	0.8 U	1 J	70 U	0.5 U		
Deep	DW-13	8/7/2008	GW	7200	90	0.8 U	14	1 U	210	69	2 J	0.8 U	1 J	70 U	0.5 U		
Deep	DW-13	8/21/2008	GW	23000	180 J	0.8 UJ	23 J	1 UJ	190 J	77 J	2 J	0.8 UJ	1 UJ	70 UJ	0.5 UJ		
Deep	DW-13	9/4/2008	GW	13000	230	0.8 U	26	1 U	310	78	3 J	0.8 U	1 U	70 U	0.5 U		
Deep	DW-13	9/18/2008	GW	8800	200	0.8 U	26	1 U	360	110	3 J	0.8 U	1 U	70 U	0.5 U		
Deep	DW-13	9/30/2008	GW	10000	110	0.8 U	16	1 U	260	76	2 J	0.8 U	1 J	70 U	0.5 U		
Deep	DW-13	10/15/2008	GW	4400	95 J	0.8 UJ	17 J	1 UJ	250 J	58 J	2 J	0.8 UJ	1 J	70 UJ	0.5 UJ		
Deep	DW-13	10/30/2008	GW	5800	99	0.8 U	18	1 U	240	67	2 J	0.8 U	1 J	70 U	0.5 U		
Deep	DW-13	11/12/2008	GW	5200	86	0.8 U	16	1 U	210	55	2 J	0.8 U	1 J	70 U	0.5 U		
Deep	DW-13	11/25/2008	GW	5000	99	0.8 U	17	1 U	220	63	2 J	0.8 U	1 J	70 U	0.5 U		
Deep	DW-13	12/10/2008	GW	5600	84	0.8 U	17	1 U	220	58	2 J	0.8 U	1 J	70 U	0.5 U		
Deep	DW-13	12/23/2008	GW	5000	89	0.8 U	18	1 U	210	58	2 J	0.8 U	1 J	70 U	0.5 U		
Deep	DW-13	1/8/2009	GW	9700	85	0.8 U	18	1 U	220	58	2 J	0.8 U	1 J	70 U	0.5 U		
Deep	DW-13	1/22/2009	GW	10000	180	0.8 U	27	1 U	300	100	3 J	0.8 U	1 J	70 U	0.5 U		
Deep	DW-13	2/17/2009	GW	9900 J	160	0.8 U	23	1 U	300	74	3 J	0.8 U	1 U	70 U	0.5 U		
Deep	DW-13	3/6/2009	GW	4800	89	0.8 U	15	1 U	230	72	2 J	0.8 U	1 J	70 U	0.5 U		
Deep	DW-13	3/18/2009	GW	7600	89	0.8 U	19	1 U	260	72	2 J	0.8 U	1 J	70 U	0.5 U		
Deep	DW-13	4/3/2009	GW	5400	97	0.8 U	21	1 U	270	64	2 J	0.8 U	1 J	70 U	0.5 U		
Deep	DW-13	4/16/2009	GW	4800	86	0.8 U	19	1 U	260	74	2 J	0.8 U	1 J	70 U	0.5 U	Retain and Sample - Extraction Well (cont.)	Sample Port (cont.)
Deep	DW-13	4/29/2009	GW	4900	89	0.8 U	20	1 U	270	76	2 J	0.8 U	1 J	70 U	0.5 U		
Deep	DW-13	5/12/2009	GW	4500	86	0.8 U	19	1 U	270	68	2 J	0.8 U	1 J	70 U	0.5 U		
Deep	DW-13	5/27/2009	GW	4100	91	0.8 U	20	1 U	270 J	73	2 J	0.8 U	1 J	70 U	0.5 U		
Deep	DW-13	9/25/2009	GW	4100	66	0.8 U	19	1 U	270	46	2 J	0.8 U	2 J	70 U	0.5 U		
Deep	DW-13	10/27/2009	GW	4200	72	0.8 U	23	1 U	230	38	2 J	0.8 U	2 J	70 U	0.5 U		
Deep	DW-13	11/24/2009	GW	4000	82	0.8 U	26	1 U	270	43	2 J	0.8 U	2 J	70 U	0.5 U		
Deep	DW-13	1/5/2010	GW	28000	68	0.8 U	26	1 U	240	46	2 J	0.8 U	2 J	70 U	0.5 U		
Deep	DW-13	2/3/2010	GW	3900	85	0.8 U	29	1 U	250	43	2 J	0.8 U	2 J	70 U	0.5 U		
Deep	DW-13	2/3/2010	GW	3200	86	0.8 U	29	1 U	250	43	2 J	0.8 U	3 J	70 U	0.5 U		
Deep	DW-13	3/1/2010	GW	3400	74	0.8 U	27	1 U	250	49	2 J	0.8 U	2 J	70 U	0.5 U		
Deep	DW-13	4/7/2010	GW	4500 J	75	0.8 U	29	1 U	250	47	2 J	0.8 U	3 J	150 J	0.5 U		
Deep	DW-13	4/7/2010	GW	3300 J	75	0.8 U	29	1 U	260	47	2 J	0.8 U	3 J	70 U	0.5 U		
Deep	DW-13	6/16/2010	GW	4200	69	0.8 U	30	1 U	260	43	3 J	0.8 U	4 J	70 U	0.5 U		
Deep	DW-13	8/10/2010	GW	3900	70	0.8 U	33	1 U	250	36	2 J	0.8 U	6	70 U	0.5 U		
Deep	DW-13	10/7/2010	GW	3500	91	0.8 U	36	1 U	240	32	3 J	0.8 U	9	70 U	0.5 U		
Deep	DW-13	10/7/2010	GW	3600	91	0.8 U	37	1 U	250	33	3 J	0.8 U	9	70 U	0.5 U		
Deep	DW-13	12/6/2010	GW	2800	64	0.8 U	35	1 U	210	34	3 J	0.8 U	7	70 U	0.5 U		
Deep	DW-13	2/3/2011	GW	3900 J	76	0.8 U	37	1 U	210	33	3 J	0.8 U	7	70 U	0.5 U		
Deep	DW-13	6/8/2011	GW	3000	60	0.8 U	40	1 U	170	37	3 J	0.8 U	6	70 U	0.5 U		
Deep	DW-13	9/14/2011	GW	3000	52	0.8 U	36	1 U	130	28	3 J	0.8 U	4 J	3.9 J	0.5 U		
Deep	DW-13	12/14/2011	GW	6900	62	0.8 U	44	1 U	160	32	3 J	0.8 U	6		0.5 U		
Deep	DW-13	2/27/2012	GW	2400	66	0.8 U	38	1 U	150	27	3 J	0.8 U	4 J	70 U	0.5 U		
Deep	DW-13	2/27/2012	GW	2600	69	0.8 U	40	1 U	160	27	3 J	0.8 U	5 J	70 U	0.5 U		
Deep	DW-13	5/9/2012	GW	2300	50	0.8 U	38	1 U	150	26	2 J	0.8 U	4 J		0.5 U		

Table 1 - Deep Groundwater Historical Results and Well Abandonment Rationale
Excluding Wells in Project Cub Area

Aquifer	Location	Date Sampled	Matrix	Perchlorate µg/L	111TCA µg/L	112TCA µg/L	11DCA µg/L	12DCA µg/L	11DCE µg/L	PCE µg/L	TCE µg/L	cis-12DCE µg/L	VC µg/L	14Dioxane µg/L	Benzene µg/L	Rationale*	Sample Depth
Screening Levels (SLs):				15	200	5	140	5	7	5	5	70	2	7.8	5		(ft)
Deep	DW-13	5/9/2012	GW	1700	56	0.8 U	42	1 U	160	27	2 J	0.8 U	4 J		0.5 U		
Deep	DW-13	8/16/2012	GW	3000	51	0.8 U	42	1 U	130	24	3 J	0.8 U	3 J		0.5 U		
Deep	DW-13	8/16/2012	GW	2400	56	0.8 U	43	1 U	150	28	3 J	0.8 U	3 J		0.5 U		
Deep	DW-13	11/6/2012	GW	500	100	0.8 U	33	1 U	230	47	2 J	0.8 U	3 J		0.5 U		
Deep	DW-13	11/6/2012	GW	550	100	0.8 U	36	1 U	250	43	2 J	0.8 U	3 J		0.5 U		
Deep	DW-13	5/28/2013	GW	1900	57	0.8 U	46	1 U	150	34	3 J	0.8 U	3 J	7.3	0.5 U	Retain and Sample - Extraction Well	Sample Port
Deep	DW-13	4/9/2014	GW	1500	58	0.5 U	42	0.5 U	110	42	2	0.6 J	2	70 U	0.5 U		
Deep	DW-13	5/27/2014	GW	4500	42	0.5 U	35	0.5 U	100	28	2	0.5 U	2	70 U	0.5 U		
Deep	DW-13	12/4/2014	GW	1900	68	0.5 U	41	0.5 U	130	30	2	1 J	3	70 U	0.5 U	(cont.)	(cont.)
Deep	DW-13	5/11/2015	GW	1600	41	0.5 U	38	0.5 U	100	30	2	1	2	6.4	0.5 U		
Deep	DW-13	11/5/2015	GW	1200	40	0.5 U	37	0.5 U	110	25	1	1	2	6.1	0.5 U		
Deep	DW-13	3/28/2016	GW	1500	41	0.5 U	29	0.5 U	100	4	2	0.8 J	2	6.8	0.5 U		
Deep	DW-13	10/26/2016	GW	970	42	0.5 U	32	0.5 U	120	7	2	1	2	4.4 j	0.5 U		
Deep	DW-13	4/17/2017	GW	800	28	0.5 U	27	0.5 U	80	6	2	0.9 J	2	4.3	0.5 U		
Deep	DW-15	5/22/2003	GW	6350	6.9	1 U	2.1	1 U	22	16.4	1 U	1.4	1 U				
Deep	DW-15	4/8/2004	GW	1110	7	0.8 U	4 J	1 U	20	10	1 J	2 J	1 U		0.5 U		
Deep	DW-15	5/12/2004	GW	1250	7	0.8 U	4 J	1 U	20	9	1 U	1 J	1 U		0.5 U		
Deep	DW-15	8/18/2004	GW	821	5 J	0.8 U	3 J	1 U	14	5 J	1 U	0.9 J	1 U		0.5 U		
Deep	DW-15	11/10/2004	GW	1270	13	0.8 U	6	1 U	44	20	1 U	1 J	1 U		0.5 U		
Deep	DW-15	2/15/2005	GW	0.7 U	6	0.8 U	4 J	1 U	21	5 J	1 U	0.8 U	1 U		0.5 U		
Deep	DW-15	5/9/2005	GW	0.7 U	2 J	0.8 U	6	1 U	17	4 J	1 U	0.8 U	1 U		0.5 U		
Deep	DW-15	5/9/2006	GW	0.37 J	0.8 U	0.8 U	4 J	1 U	8	2 J	2 J	0.8 U	1 U		0.5 U		
Deep	DW-15	2/20/2007	GW	4.4	0.8 U	0.8 U	4 J	1 U	8	1 J	1 U	0.8 U	1 J		0.5 U		
Deep	DW-15	10/14/2009	GW	0.3 J	0.8 U	0.8 U	3 J	1 U	6	0.8 U	3 J	1 J	3 J	70 U	0.5 U		
Deep	DW-15	3/17/2010	GW	0.2 U	0.8 U	0.8 U	2 J	1 U	7	0.8 U	4 J	1 J	2 J	70 U	0.5 U	Retain and Sample	273
Deep	DW-15	3/17/2010	GW	0.2 U	0.8 U	0.8 U	2 J	1 U	8	0.8 U	4 J	2 J	2 J	70 U	0.5 U		
Deep	DW-15	8/30/2011	GW		0.8 U	0.8 U	7	1 U	5 J	0.8 U	3 J	0.9 J	8		0.5 U		
Deep	DW-15	5/3/2012	GW		0.8 U	0.8 U	6	1 U	12	0.8 U	4 J	1 J	7		0.5 U		
Deep	DW-15	11/7/2012	GW		0.8 U	0.8 U	4 J	1 U	4 J	0.8 U	2 J	3 J	6		0.5 U		
Deep	DW-15	5/21/2013	GW	1 U	0.8 U	0.8 U	6	1 U	8	0.8 U	3 J	1 J	6		0.5 U		
Deep	DW-15	5/31/2013	GW											2 j			
Deep	DW-15	11/20/2013	GW		0.8 U	0.8 U	1 J	1 U	2 J	0.8 U	2 J	2 J	3 J	70 U	0.5 U		
Deep	DW-15	5/14/2014	GW		0.5 U	0.5 U	1	0.5 U	2	0.5 U	2	0.7 J	2		0.5 U		
Deep	DW-15	5/14/2015	GW	0.2 U	0.5 U	0.5 U	8	0.5 U	16	0.5 U	4	2	9		0.5 U		
Deep	DW-15	3/30/2016	GW	0.2 U	0.5 U	0.5 U	9	0.5 U	17	0.5 U	4	1	9		0.5 U		
Deep	DW-15	4/18/2017	GW	0.2 U	0.5 U	0.5 U	0.5 U	0.5 U	0.5 U	0.5 U	0.5 U	2	2		0.5 U		

Table 1 - Deep Groundwater Historical Results and Well Abandonment Rationale
Excluding Wells in Project Cub Area

Aquifer	Location	Date Sampled	Matrix	Perchlorate µg/L	111TCA µg/L	112TCA µg/L	11DCA µg/L	12DCA µg/L	11DCE µg/L	PCE µg/L	TCE µg/L	cis-12DCE µg/L	VC µg/L	14Dioxane µg/L	Benzene µg/L	Rationale*	Sample Depth
Screening Levels (SLs):				15	200	5	140	5	7	5	5	70	2	7.8	5		(ft)
Deep	DW-16	11/12/2002	GW		1 U	1 U	1 U	1 U	2.4	1 U	1 U	1 U	1 U				
Deep	DW-16	11/12/2002	GW		1 U	1 U	1 U	1 U	1 U	1 U	1 U	1 U	1 U				
Deep	DW-16	5/22/2003	GW	8230	1 U	1 U	1 U	1 U	1 U	1 U	1 U	1 U	1 U				
Deep	DW-16	5/22/2003	GW	8524													
Deep	DW-16	4/23/2004	GW	204	0.8 U	0.8 U	1 U	1 U	0.8 U	0.8 U	1 U	0.8 U	1 U		0.5 U		
Deep	DW-16	4/23/2004	GW	858													
Deep	DW-16	5/12/2004	GW	372	0.8 U	0.8 U	1 U	1 U	0.8 U	0.8 U	1 U	0.8 U	1 U		0.5 U		
Deep	DW-16	5/12/2004	GW	716													
Deep	DW-16	8/19/2004	GW	275	0.8 U	0.8 U	1 U	1 U	0.8 U	0.8 U	1 U	0.8 U	1 U		0.5 U		
Deep	DW-16	9/1/2004	GW	250													
Deep	DW-16	9/1/2004	GW	242												Retain and Sample	240
Deep	DW-16	11/11/2004	GW	273	1 J	0.8 U	1 U	1 U	2 J	7	1 U	0.8 U	1 U		0.5 U		
Deep	DW-16	2/15/2005	GW	188	0.8 U	0.8 U	1 U	1 U	0.8 U	0.8 U	1 U	0.8 U	1 U		0.5 U		
Deep	DW-16	5/9/2005	GW	180	0.8 U	0.8 U	1 U	1 U	0.8 U	0.8 U	1 U	0.8 U	1 U		0.5 U		
Deep	DW-16	5/9/2006	GW	720	0.8 U	0.8 U	1 U	1 U	0.8 U	0.8 U	1 U	0.8 U	1 U		0.5 U		
Deep	DW-16	2/19/2007	GW	190													
Deep	DW-16	9/28/2007	GW	230	1 J	0.8 U	1 U	1 U	6	1 J	1 U	0.8 U	1 U		0.5 U		
Deep	DW-16	9/28/2007	GW	230	1 J	0.8 U	1 U	1 U	6	1 J	1 U	0.8 U	1 U		0.5 U		
Deep	DW-16	5/13/2008	GW	170	5 UJ	5 UJ	5 UJ	5 UJ	2.3 J	5 UJ	5 UJ	5 UJ	5 UJ		5 UJ		
Deep	DW-16	3/17/2010	GW	46 J	0.8 U	0.8 U	11	1 U	40	0.8 U	1 U	0.8 U	1 U	70 U	0.5 U		
Deep	DW-16	8/30/2011	GW	21	0.8 U	0.8 U	26	1 U	36	0.8 U	1 U	0.8 U	4 J		0.5 U		
Deep	DW-16	12/12/2011	GW		0.8 U	0.8 U	33	1 U	33	0.8 U	1 U	0.8 U	4 J		0.5 U		
Deep	DW-16	5/2/2012	GW		0.8 U	0.8 U	15	1 U	18	0.8 U	1 U	0.8 U	2 J		0.5 U		
Deep	DW-16	11/7/2012	GW		0.8 U	0.8 U	14	1 U	20	0.8 U	1 U	0.8 U	1 J		0.5 U		
Deep	DW-16	5/22/2013	GW	7.6 j	0.8 U	0.8 U	19 j	1 U	15 j	0.8 U	1 U	0.8 U	1 Jj	1.5 j	0.5 U	Retain and Sample	240
Deep	DW-16	11/20/2013	GW	3	0.8 U	0.8 U	17	1 U	18	0.8 U	1 U	0.8 U	1 J	70 U	0.5 U		
Deep	DW-16	5/14/2014	GW		0.5 U	0.5 U	16	0.5 U	16	0.5 U	0.5 U	0.5 U	1		0.5 U	(cont.)	(cont.)
Deep	DW-16	11/11/2014	GW		0.5 U	0.5 U	17	0.5 U	13	0.5 U	0.5 U	0.5 U	1		0.5 U		
Deep	DW-16	5/15/2015	GW	2	0.5 U	0.5 U	18	0.5 U	12	0.5 U	0.5 U	0.5 U	1		0.5 U		
Deep	DW-16	3/30/2016	GW	3.2	0.5 U	0.5 U	18	0.5 U	11	0.5 U	0.5 U	0.5 U	0.9 J		0.5 U		
Deep	DW-16	4/18/2017	GW	0.2 U	0.5 U	0.5 U	11	0.5 U	5	0.5 U	0.5 U	0.5 U	0.5 J		0.5 U		

Table 1 - Deep Groundwater Historical Results and Well Abandonment Rationale
Excluding Wells in Project Cub Area

Aquifer	Location	Date Sampled	Matrix	Perchlorate µg/L	111TCA µg/L	112TCA µg/L	11DCA µg/L	12DCA µg/L	11DCE µg/L	PCE µg/L	TCE µg/L	cis-12DCE µg/L	VC µg/L	14Dioxane µg/L	Benzene µg/L	Rationale*	Sample Depth
Screening Levels (SLs):				15	200	5	140	5	7	5	5	70	2	7.8	5		(ft)
Deep	DW-18	8/21/2002	GW		5 U	5 U	5 U	5 U	5 U	5 U	5 U	5 U	5 U		5 U		
Deep	DW-18	8/21/2002	GW		5 U	5 U	5 U	5 U	5 U	5 U	5 U	5 U	5 U		5 U		
Deep	DW-18	9/18/2002	GW		1 U	1 U	1 U	1 U	1 U	57	18	1 U	1 U				
Deep	DW-18	5/21/2003	GW	2 U	1 U	1 U	1 U	1 U	1 U	1.9	1 U	1 U	1 U				
Deep	DW-18	5/21/2003	GW	4 U													
Deep	DW-18	4/6/2004	GW	97.7	0.8 U	0.8 U	1 U	1 U	3 J	12	1 U	0.8 U	1 U		0.5 U		
Deep	DW-18	4/20/2004	GW											1 U			
Deep	DW-18	2/19/2007	GW	140	0.8 U	0.8 U	1 U	1 U	1 J	0.8 U	2 J	0.8 U	1 U		0.5 U		
Deep	DW-18	8/31/2011	GW	0.2 U	0.8 U	0.8 U	6	1 U	11	0.8 U	18	6	1 U		0.5 U	Retain and Sample	350
Deep	DW-18	12/12/2011	GW	0.2 U													
Deep	DW-18	5/3/2012	GW	0.2 U	0.8 U	0.8 U	11	1 U	19	0.8 U	29	16	1 U		0.5 U		
Deep	DW-18	5/22/2013	GW	1 U	0.8 U	0.8 U	10 j	1 U	17 j	0.8 U	28 j	19 j	1 U	1.4 j	0.5 U		
Deep	DW-18	5/14/2014	GW	1 U	0.5 U	0.5 U	13	0.5 U	25	0.5 U	29	29	0.5 U		0.5 U		
Deep	DW-18	11/11/2014	GW	1 U													
Deep	DW-18	5/15/2015	GW	0.2 U	0.5 U	0.5 U	1	0.5 U	2	0.5 U	4	2	0.5 U		0.5 U		
Deep	DW-18	3/31/2016	GW	0.2 U	0.5 U	0.5 U	11	0.5 U	22	0.5 U	29	24	0.5 U		0.5 U		
Deep	DW-18	4/19/2017	GW	0.2 U	0.5 U	0.5 U	12	0.5 U	20	0.9 J	28	23	0.5 U		0.5 U		
Deep	DW-20	8/22/2002	GW		5 U	5 U	1 E	5 U	9	3 E	5 U	5 U	5 U		5 U		
Deep	DW-20	9/18/2002	GW		1 U	1 U	1 U	1 U	1 U	1 U	1 U	1 U	1 U				
Deep	DW-20	11/14/2002	GW		1 U	1 U	2.6	1 U	12.7	4.3	1 U	1 U	1 U				
Deep	DW-20	11/14/2002	GW		1 U	1 U	1 U	1 U	6.2	3.7	1 U	1 U	1 U				
Deep	DW-20	5/22/2003	GW	211	1 U	1 U	7.8	1 U	15.5	30.3	2.3	3.2	1				
Deep	DW-20	4/22/2004	GW	168	0.8 U	0.8 U	5 J	1 U	11	9	1 J	2 J	1 U	4 J	0.5 U		
Deep	DW-20	5/12/2004	GW	162	0.8 U	0.8 U	5	1 U	12	8	1 J	2 J	1 U		0.5 U		
Deep	DW-20	8/18/2004	GW	21.5	0.9 J	0.8 U	2 J	1 U	5 J	3 J	1 U	0.8 U	1 U		0.5 U		
Deep	DW-20	11/11/2004	GW	14	0.8 U	0.8 U	2 J	1 U	5	7	1 U	0.8 U	1 U		0.5 U		
Deep	DW-20	2/15/2005	GW	42.1	0.8 U	0.8 U	3 J	1 U	6	3 J	1 U	0.9 J	1 U		0.5 U		
Deep	DW-20	2/19/2007	GW	500	0.8 U	0.8 U	8	1 U	15	17	2 J	3 J	1 U		0.5 U		
Deep	DW-20	9/27/2007	GW	570	0.8 U	0.8 U	9	1 U	19	18	2 J	4 J	1 U		0.5 U	Retain and Sample	270/ Artesian
Deep	DW-20	5/14/2008	GW	430	5 UJ	5 UJ	6.5 J	5 UJ	7.6 J	11 J	1.6 J	2.5 J	5 UJ		5 UJ		
Deep	DW-20	8/28/2009	GW	2 UJ	0.8 UJ	0.8 UJ	3 J	1 UJ	13 J	3 J	1 UJ	0.8 UJ	1 UJ	70 UJ	0.5 UJ		
Deep	DW-20	4/1/2010	GW	2 U	0.8 U	0.8 U	3 J	1 U	16	3 J	1 U	0.8 U	1 U	70 U	0.5 U		
Deep	DW-20	8/30/2011	GW	0.2 U	0.8 U	0.8 U	4 J	1 U	14	2 J	1 U	0.8 U	1 U		0.5 U		
Deep	DW-20	5/4/2012	GW		0.8 U	0.8 U	4 J	1 U	13	4 J	1 U	0.8 U	1 U		0.5 U		
Deep	DW-20	5/4/2012	GW		0.8 U	0.8 U	4 J	1 U	13	3 J	1 U	0.8 U	1 U		0.5 U		
Deep	DW-20	5/22/2013	GW	1 U	0.8 U	0.8 U	4 Jj	1 U	13 j	2 Jj	1 U	0.8 U	1 U	0.7 j	0.5 U		
Deep	DW-20	5/18/2014	GW	1 U	0.5 U	0.5 U	5	0.5 U	14	3	0.5 U	0.5 U	0.5 J		0.5 U		
Deep	DW-20	11/11/2015	GW	0.2 U	0.5 U	0.5 U	10	0.5 U	19	2	0.5 U	0.5 U	0.6 J	0.81	0.5 U		
Deep	DW-20	4/1/2016	GW	0.2 U	0.5 U	0.5 U	7	0.5 U	14	2	0.5 U	0.5 U	0.5 J	0.63	0.5 U		
Deep	DW-20	4/18/2017	GW	280	0.5 U	0.5 U	8	0.5 U	6	7	2	2	0.5 U	0.05 U	0.5 U		

Table 1 - Deep Groundwater Historical Results and Well Abandonment Rationale
Excluding Wells in Project Cub Area

Aquifer	Location	Date Sampled	Matrix	Perchlorate µg/L	111TCA µg/L	112TCA µg/L	11DCA µg/L	12DCA µg/L	11DCE µg/L	PCE µg/L	TCE µg/L	cis-12DCE µg/L	VC µg/L	14Dioxane µg/L	Benzene µg/L	Rationale*	Sample Depth
Screening Levels (SLs):				15	200	5	140	5	7	5	5	70	2	7.8	5		(ft)
Deep	DW-23	4/8/2004	GW	172	150	0.8 U	14	1 U	55	8	1 U	0.8 U	1 U		0.5 U	Retain and Sample	195
Deep	DW-23	5/11/2004	GW	250	130	0.8 U	14	1 U	54	7	1 U	0.8 U	1 U		0.5 U		
Deep	DW-23	8/18/2004	GW	471	150	0.8 U	22	1 U	120	8	1 U	0.8 U	1 U		0.5 U		
Deep	DW-23	11/10/2004	GW	3.1 J	89	0.8 U	16	1 U	74	31	1 U	0.8 U	1 U		0.5 U		
Deep	DW-23	2/16/2005	GW	14.8	67	0.8 U	19	1 U	66	6	1 U	0.8 U	1 U		0.5 U		
Deep	DW-23	2/20/2007	GW	32	36	0.8 U	14	1 U	32	5	1 U	0.8 U	1 J		0.5 U		
Deep	DW-23	10/14/2009	GW	35	61	0.8 U	15	1 U	40	3 J	1 U	0.8 U	1 U	70 U	0.5 U		
Deep	DW-23	3/17/2010	GW	27	78	0.8 U	13	1 U	52	4 J	1 U	0.8 U	1 U	70 U	0.5 U		
Deep	DW-23	8/31/2011	GW	23	48	0.8 U	15	1 U	47	4 J	1 U	0.8 U	1 U		0.5 U		
Deep	DW-23	8/31/2011	GW	24	52	0.8 U	15	1 U	47	4 J	1 U	0.8 U	1 U		0.5 U		
Deep	DW-23	5/2/2012	GW	22	54	0.8 U	16	1 U	49	7	1 U	0.8 U	1 U		0.5 U		
Deep	DW-23	5/23/2013	GW	18	65	0.8 U	15	1 U	43	4 J	1 U	0.8 U	1 U	12	0.5 U		
Deep	DW-23	5/14/2014	GW	21	53	0.5 U	16	0.5 U	59	5	0.8 J	0.5 U	0.7 J	9	0.5 U		
Deep	DW-25	11/8/2004	GW	427	9	0.8 U	2 J	1 U	48	81	1 U	0.8 U	1 U		0.5 U	Retain for water levels only; within capture zone of DW-13	185
Deep	DW-25	6/2/2008	GW		5 UJ	5 UJ	5 UJ	5 UJ	7.1 J	3.3 J	5 UJ	5 UJ	5 UJ		5 UJ		
Deep	DW-25	10/15/2009	GW	0.22 J	0.9 J	0.8 U	3 J	1 U	12	2 J	1 U	0.8 U	1 U	70 U	0.5 U		
Deep	DW-25	3/19/2010	GW	48	0.8 U	0.8 U	1 U	1 U	5	4 J	1 U	1 J	1 U	70 U	0.5 U		
Deep	DW-25	9/12/2011	GW	0.66 J	3 J	0.8 U	51	1 U	11	0.8 U	1 U	0.8 U	6		0.5 U		
Deep	DW-25	5/2/2012	GW		3 J	0.8 U	85	1 U	6	0.9 J	1 U	0.8 U	6		0.5 U		
Deep	DW-25	5/23/2013	GW	1 U	0.8 U	0.8 U	75	1 U	2 J	0.8 U	1 U	0.8 U	4 J		0.5 U		
Deep	DW-25	5/23/2013	GW	1 U	0.8 U	0.8 U	75	1 U	1 J	0.8 U	1 U	0.8 U	4 J		0.5 U		
Deep	DW-25	5/13/2014	GW	64	0.5 U	0.5 U	2	0.5 U	2	0.7 J	0.5 U	0.5 U	0.5 U		0.5 U		
Deep	DW-26I	11/9/2004	GW	0.7 U	43	1 J	5	1 U	470	260	1 J	0.8 U	1 U		0.5 U	Retain and Sample	92
Deep	DW-26I	2/17/2005	GW	0.7 U	37	1 J	5 J	1 J	590	340	2 J	0.8 U	1 U		0.5 U		
Deep	DW-26I	6/5/2008	GW		500 UJ	500 UJ	500 UJ	500 UJ	640 J	740 J	500 UJ	500 UJ	500 UJ		500 UJ		
Deep	DW-26I	10/13/2009	GW	280	6	0.8 U	2 J	1 U	290	850	1 U	0.8 U	1 U	70 U	0.5 U		
Deep	DW-26I	4/6/2010	GW	480	2 J	2 U	2 U	2 U	130	1400	2 U	2 U	2 U	140 U	1 U		
Deep	DW-26I	11/11/2010	GW		5 J	0.8 U	4 J	1 U	110	1100	1 J	2 J	1 U	70 U	0.5 U		
Deep	DW-26I	9/8/2011	GW	180	4 J	0.8 U	12	1 U	72	720	1 U	1 J	4 J		0.5 U		
Deep	DW-26I	12/14/2011	GW		3 J	0.8 U	8	1 U	94	800	1 U	1 J	3 J		0.5 U		
Deep	DW-26I	12/14/2011	GW		3 J	0.8 U	8	1 U	92	780	1 U	1 J	3 J		0.5 U		
Deep	DW-26I	5/11/2012	GW	120	2 J	0.8 U	17	1 U	42	420	1 U	1 J	3 J		0.5 U		
Deep	DW-26I	5/23/2013	GW	90	1 J	0.8 U	21	1 U	25	360	1 U	0.8 J	2 J	2.7	0.5 U		
Deep	DW-26I	5/13/2014	GW	220	1	0.5 U	13	0.5 U	94	550	0.8 J	1	1		0.5 U		
Deep	DW-26I	11/11/2014	GW		1	0.5 U	10	0.5 U	35	380	0.6 J	0.6 J	0.8 J		0.5 U		

Table 1 - Deep Groundwater Historical Results and Well Abandonment Rationale
Excluding Wells in Project Cub Area

Aquifer	Location	Date Sampled	Matrix	Perchlorate µg/L	111TCA µg/L	112TCA µg/L	11DCA µg/L	12DCA µg/L	11DCE µg/L	PCE µg/L	TCE µg/L	cis-12DCE µg/L	VC µg/L	14Dioxane µg/L	Benzene µg/L	Rationale*	Sample Depth
Screening Levels (SLs):				15	200	5	140	5	7	5	5	70	2	7.8	5		(ft)
Deep	DW-28I	11/8/2004	GW	52800	4200	8	220	13	3500	9	1 J	0.8 U	1 U		0.5 U	Retain and Sample	105
Deep	DW-28I	2/17/2005	GW	928	4000	8 U	230	10 U	3900	8 U	10 U	8 U	10 U		5 U		
Deep	DW-28I	5/10/2005	GW	1740	4000	4 U	230	8 J	4600	4 U	5 U	4 U	5 U		3 U		
Deep	DW-28I	2/15/2006	GW	630	5300	10	360	16	5000	0.8 U	3 J	0.8 U	1 U		0.5 U		
Deep	DW-28I	5/12/2006	GW	500	3100	5	270	10	3100	0.8 U	1 J	0.8 U	1 U		0.5 U		
Deep	DW-28I	8/16/2006	GW	940	1800	3 J	190	6	2000	0.8 U	1 U	0.8 U	1 U		0.5 U		
Deep	DW-28I	11/16/2006	GW	640	2000	3 J	160	5	2400	0.8 U	1 U	0.8 U	1 U		0.5 U		
Deep	DW-28I	2/16/2007	GW	900	2500	4 J	200	10	2300	2 U	2 U	2 U	2 U		1 U		
Deep	DW-28I	10/1/2007	GW	77000	1600	3 J	120	6	1600	24	1 J	0.8 U	1 U		0.5 U		
Deep	DW-28I	5/15/2008	GW	29000	2900 J	500 UJ	170 J	500 UJ	3200 J	500 UJ	500 UJ	500 UJ	500 UJ		500 UJ		
Deep	DW-28I	6/9/2008	GW	40000	1600 J	500 UJ	110 J	500 UJ	2500 J	500 UJ	500 UJ	500 UJ	500 UJ		500 UJ		
Deep	DW-28I	9/29/2009	GW	54000	360	1 J	49	2 J	710	86	2 J	0.8 U	1 U	70 U	0.5 U		
Deep	DW-28I	3/29/2010	GW	57000	640	0.8 U	63	1 U	1000	79	2 J	0.8 U	1 U	70 U	0.5 U		
Deep	DW-28I	11/11/2010	GW		74	0.8 U	32	1 U	240	31	2 J	0.8 U	10	70 U	0.5 U		
Deep	DW-28I	11/11/2010	GW		73	0.8 U	32	1 U	230	30	2 J	0.8 U	10	70 U	0.5 U		
Deep	DW-28I	9/6/2011	GW	15000	36	0.8 U	39	1 U	130	26	2 J	0.8 U	9	5.6	0.5 U		
Deep	DW-28I	12/14/2011	GW		610	2 U	86	3 J	1100	120	2 U	2 U	4 J		1 U		
Deep	DW-28I	5/11/2012	GW	11000	30	0.8 U	40	1 U	96	16	3 J	0.8 U	5		0.5 U		
Deep	DW-28I	5/23/2013	GW	9800	24	0.8 U	53	1 U	72	18	3 J	0.8 U	4 J	5.3	0.5 U		
Deep	DW-28I	5/14/2014	GW	680	1100	2	160	4	1700	220	0.8 J	0.5 J	0.8 J	27	0.5 U		
Deep	DW-28I	11/12/2014	GW		160	0.5 U	57	0.7 J	180	31	2	0.9 J	3		0.5 U		
Deep	DW-28I	5/15/2015	GW	7700	140	0.5 U	55	0.5 U	250	27	2	1	4	7	0.5 U		
Deep	DW-28I	4/1/2016	GW	8100	140	0.5 U	55	0.8 J	260	37	1	1	3	8.3	0.5 U		
Deep	DW-28I	4/20/2017	GW	4800	120	0.5 U	35	0.5 U	250	52	1	1	2	0.24	0.5 U		
Deep	DW-28D	11/8/2004	GW	7450	180	0.8 U	15	1 U	290	27	1 U	0.8 U	1 U		0.5 U	Retain and Sample: exceeded SLs for perchlorate, PCE, 11DCE, and Vcin 2014; within DW-13 capture zone; provides downgradient monitoring for DW-24 and vertical coverage with DW-28I near the DW-13 extraction well	195
Deep	DW-28D	2/17/2005	GW	10500	180	0.8 U	14	1 U	260	18	1 U	0.8 U	1 U		0.5 U		
Deep	DW-28D	5/10/2005	GW	5090	120	0.8 U	12	1 U	250	21	1 U	0.8 U	1 U		0.5 U		
Deep	DW-28D	2/15/2006	GW	3000	35	0.8 U	9	1 U	140	17	1 J	0.8 U	1 U		0.5 U		
Deep	DW-28D	5/12/2006	GW	4900	32	0.8 U	7	1 U	130	18	1 U	0.8 U	1 U		0.5 U		
Deep	DW-28D	8/16/2006	GW	33000	200	0.8 U	18	1 U	230	18	1 U	0.8 U	1 U		0.5 U		
Deep	DW-28D	11/16/2006	GW	7800	48	0.8 U	8	1 U	170	16	1 U	0.8 U	1 U		0.5 U		
Deep	DW-28D	2/16/2007	GW	120000	860	2 J	69	4 J	810	15	1 U	0.8 U	1 U		0.5 U		
Deep	DW-28D	9/27/2007	GW	3600	25	0.8 U	9	1 U	140	15	1 U	0.8 U	1 U		0.5 U		
Deep	DW-28D	5/12/2008	GW	2900	50 UJ	50 UJ	50 UJ	50 UJ	76 J	50 UJ	50 UJ	50 UJ	50 UJ		50 UJ		
Deep	DW-28D	5/21/2008	GW	2900	50 UJ	50 UJ	50 UJ	50 UJ	64 J	50 UJ	50 UJ	50 UJ	50 UJ		50 UJ		
Deep	DW-28D	9/23/2009	GW	3200	5	0.8 U	5	1 U	86	21	1 J	0.8 U	1 U	70 U	0.5 U		
Deep	DW-28D	3/29/2010	GW	1200	7	0.8 U	14	1 U	97	15	1 J	0.8 U	1 U	70 U	0.5 U		
Deep	DW-28D	9/8/2011	GW	380	10	0.8 U	35	1 U	67	7	1 U	0.8 U	12		0.5 U		
Deep	DW-28D	5/11/2012	GW		5 J	0.8 U	41	1 U	45	6	1 U	0.8 U	7		0.5 U		
Deep	DW-28D	5/23/2013	GW	150	3 J	0.8 U	59	1 U	32	5	1 U	0.8 U	6	3.5	0.5 U		
Deep	DW-28D	5/23/2013	GW	150	3 J	0.8 U	55	1 U	31	5	1 U	0.8 U	5	3.7	0.5 U		
Deep	DW-28D	5/14/2014	GW	13000	28	0.5 U	47	0.5 U	73	18	2	0.6 J	4		0.5 U		

Table 1 - Deep Groundwater Historical Results and Well Abandonment Rationale
Excluding Wells in Project Cub Area

Aquifer	Location	Date Sampled	Matrix	Perchlorate µg/L	111TCA µg/L	112TCA µg/L	11DCA µg/L	12DCA µg/L	11DCE µg/L	PCE µg/L	TCE µg/L	cis-12DCE µg/L	VC µg/L	14Dioxane µg/L	Benzene µg/L	Rationale*	Sample Depth
Screening Levels (SLs):				**15**	**200**	**5**	**140**	**5**	**7**	**5**	**5**	**70**	**2**	**7.8**	**5**		(ft)
Deep	DW-29S	11/9/2004	GW	47800	9	0.8 U	2 J	1 U	21	3 J	1 U	0.8 U	1 U		0.5 U	Retain and Sample	30
Deep	DW-29S	2/17/2005	GW	390000	4 J	0.8 U	2 J	1 U	21	12	1 U	0.8 U	1 U		0.5 U		
Deep	DW-29S	5/11/2005	GW	529000	5 J	0.8 U	2 J	1 U	11	0.8 U	1 U	0.8 U	1 U		0.5 U		
Deep	DW-29S	5/10/2006	GW	1600000	1 J	0.8 U	3 J	1 U	16	0.8 U	1 U	0.8 U	1 U		0.5 U		
Deep	DW-29S	2/16/2007	GW	1500000	5 J	0.8 U	2 J	1 U	13	0.8 U	1 U	0.8 U	1 U		0.5 U		
Deep	DW-29S	10/3/2007	GW	510000													
Deep	DW-29S	5/16/2008	GW	410000	0.86 J	5 UJ	1.7 J	5 UJ	7.4 U	5 UJ	5 UJ	5 UJ	5 UJ		5 UJ		
Deep	DW-29S	9/25/2009	GW	160000	0.8 U	0.8 U	1 U	1 U	7	0.8 U	1 U	0.8 U	1 U	70 U	0.5 U		
Deep	DW-29S	3/31/2010	GW	84000	0.8 U	0.8 U	1 J	1 U	6	0.8 U	1 U	0.8 U	1 U	70 U	0.5 U		
Deep	DW-29S	9/7/2011	GW	67000													
Deep	DW-29S	5/10/2012	GW	75000													
Deep	DW-29S	5/22/2013	GW	170000										4.7			
Deep	DW-29S	5/13/2014	GW	150000													
Deep	DW-29S	5/15/2015	GW	24	0.5 U	0.5 U	5	0.6 J	0.5 U	0.5 U	0.5 U	0.5 U	0.5 U		0.5 U		
Deep	DW-29S	4/1/2016	GW	220000	0.5 J	0.5 U	8	0.5 U	8	0.5 U	0.5 U	0.5 U	0.5 U		0.5 U		
Deep	DW-29S	4/20/2017	GW	120000	0.5 U	0.5 U	4	0.5 U	3	0.5 U	0.5 U	0.5 U	0.5 U		0.5 U		
Deep	DW-29I	11/9/2004	GW	1330	8	0.8 U	2 J	1 U	14	1 J	1 U	0.8 U	1 U		0.5 U	Retain for Water Levels: exceeded for perchlorate only in 2014; VOCs below SLs with decreasing trends; within DW-13 capture zone	145
Deep	DW-29I	2/17/2005	GW	1120	9	0.8 U	2 J	1 U	17	0.8 U	1 U	0.8 U	1 U		0.5 U		
Deep	DW-29I	5/11/2005	GW	1350	9	0.8 U	2 J	1 U	18	0.8 J	1 U	0.8 U	1 U		0.5 U		
Deep	DW-29I	5/10/2006	GW	290	7	0.8 U	2 J	1 U	17	0.8 U	1 U	0.8 U	1 U		0.5 U		
Deep	DW-29I	2/19/2007	GW	720	4 J	0.8 U	3 J	1 U	15	0.8 U	1 U	0.8 U	1 U		0.5 U		
Deep	DW-29I	2/19/2007	GW	690	4 J	0.8 U	3 J	1 U	15	0.8 U	1 U	0.8 U	1 U		0.5 U		
Deep	DW-29I	9/27/2007	GW	0.2 U	3 J	0.8 U	3 J	1 U	14	0.8 U	1 U	0.8 U	1 U		0.5 U		
Deep	DW-29I	5/16/2008	GW	1 U	1.4 J	5 UJ	2.8 J	5 UJ	8.8 J	5 UJ	5 UJ	5 UJ	5 UJ		0.97 J		
Deep	DW-29I	9/25/2009	GW	0.2 U	0.8 U	0.8 U	20	1 U	64	0.8 U	1 U	0.8 U	1 U	70 U	0.5 U		
Deep	DW-29I	11/23/2009	GW	1 U	0.8 U	0.8 U	52	1 U	140	0.8 U	1 U	0.8 U	2 J	70 U	0.5 U		
Deep	DW-29I	2/3/2010	GW	1 U	0.8 U	0.8 U	46	1 U	120	0.8 U	1 U	0.8 U	2 J	70 U	0.5 U		
Deep	DW-29I	4/7/2010	GW	2 U	0.8 U	0.8 U	53	1 U	140	0.8 U	1 U	0.8 U	5 J	70 U	0.5 U		
Deep	DW-29I	6/16/2010	GW	0.2 U	0.8 U	0.8 U	53	1 U	140	0.8 U	1 U	0.8 U	10	70 U	0.5 U		
Deep	DW-29I	8/10/2010	GW	2 U	0.8 U	0.8 U	34	1 U	75	0.8 U	1 U	0.8 U	3 J	70 U	0.5 U		
Deep	DW-29I	10/6/2010	GW	0.2 U	0.8 U	0.8 U	49	1 U	95	0.8 U	1 U	0.8 U	14	70 U	0.5 U		
Deep	DW-29I	12/7/2010	GW	0.2 U	3 J	0.8 U	69	1 U	57	0.8 U	1 U	0.8 U	34	70 U	0.5 U		
Deep	DW-29I	2/3/2011	GW	2 U	2 J	0.8 U	60	1 U	56	0.8 U	1 U	0.8 U	20	70 U	0.5 U		
Deep	DW-29I	6/9/2011	GW	0.2 U	1 J	0.8 U	67	1 U	37	0.8 U	1 U	0.8 U	15	70 U	0.5 U		
Deep	DW-29I	9/15/2011	GW	0.2 U	0.8 U	0.8 U	46	1 U	38	0.8 U	1 U	0.8 U	9		0.5 U		
Deep	DW-29I	12/13/2011	GW	0.2 U	0.8 U	0.8 U	64	1 U	27	0.8 U	1 U	0.8 U	12		0.5 U		
Deep	DW-29I	5/10/2012	GW	0.2 U	0.8 U	0.8 U	74	1 U	19	0.8 U	1 U	0.8 U	9		0.5 U		
Deep	DW-29I	5/28/2013	GW	1 U	0.8 U	0.8 U	57	1 U	2 J	0.8 U	1 U	0.8 U	7		0.5 U		
Deep	DW-29I	11/19/2013	GW	0.2 U	0.8 U	0.8 U	53	1 U	1 J	0.8 U	1 U	0.8 U	3 J	70 U	0.5 U		
Deep	DW-29I	5/13/2014	GW	1 U	0.5 U	0.5 U	51	0.5 U	6	0.5 U	0.5 U	0.5 U	6		0.5 U		
Deep	DW-29I	5/13/2014	GW	1 U	0.5 U	0.5 U	50	0.5 U	6	0.5 U	0.5 U	0.5 U	6		0.5 U		
Deep	DW-29I	11/12/2014	GW	21	0.5 U	0.5 U	7	0.5 U	1	0.5 U	0.5 U	0.5 U	0.5 U		0.5 U		

Table 1 - Deep Groundwater Historical Results and Well Abandonment Rationale
Excluding Wells in Project Cub Area

Aquifer	Location	Date Sampled	Matrix	Perchlorate µg/L	111TCA µg/L	112TCA µg/L	11DCA µg/L	12DCA µg/L	11DCE µg/L	PCE µg/L	TCE µg/L	cis-12DCE µg/L	VC µg/L	14Dioxane µg/L	Benzene µg/L	Rationale*	Sample Depth
Screening Levels (SLs):				15	200	5	140	5	7	5	5	70	2	7.8	5		(ft)
Deep	DW-30S	11/9/2004	GW	937	63	0.8 U	26	1 U	170	4 J	1 U	0.8 U	1 U		0.5 U	Retain and Sample	35
Deep	DW-30S	2/17/2005	GW	680	78	0.8 U	9	1 U	140	7	1 U	0.8 U	1 U		0.5 U		
Deep	DW-30S	5/11/2005	GW	497	37	0.8 U	8	1 U	93	1 J	1 U	0.8 U	1 U		0.5 U		
Deep	DW-30S	5/8/2006	GW	390	21	0.8 U	6	1 U	62	1 J	1 U	0.8 U	1 U		0.5 U		
Deep	DW-30S	5/22/2008	GW		9.4 J	5 UJ	3.1 J	5 UJ	33 J	5 UJ	5 UJ	5 UJ	5 UJ		5 UJ		
Deep	DW-30S	10/16/2009	GW	180	1 J	0.8 U	1 U	1 U	8	0.8 U	1 U	0.8 U	1 U	70 U	0.5 U		
Deep	DW-30S	3/29/2010	GW	140	4 J	0.8 U	1 U	1 U	2 J	0.8 U	1 U	0.8 U	1 U	70 U	0.5 U		
Deep	DW-30S	9/8/2011	GW	170	0.8 J	0.8 U	1 U	1 U	9	0.8 U	1 U	0.8 U	1 U		0.5 U		
Deep	DW-30S	5/29/2013	GW	200	0.8 U	0.8 U	1 U	1 U	6	0.8 U	1 U	0.8 U	1 U	0.14	0.5 U		
Deep	DW-30S	5/14/2015	GW	140	0.5 U	0.5 U	0.5 U	0.5 U	1	0.5 U	0.5 U	1	0.5 U		0.5 U		
Deep	DW-30S	3/31/2016	GW	250	0.5 U	0.5 U	0.6 J	0.5 U	11	0.5 U	0.5 U	0.5 U	0.5 U		0.5 U		
Deep	DW-30S	4/19/2017	GW	210	0.5 U	0.5 U	0.5 U	0.5 U	3	0.5 U	0.5 U	0.5 U	0.5 U		0.5 U		
Deep	DW-32I	11/22/2005	GW	61	360	5 J	150	9	4300 J	2 J	13	1 J	290		4 J	Retain and Sample	40
Deep	DW-32I	5/8/2006	GW	40	370	5	200	11	5900	2 J	14	2 J	120		4 J		
Deep	DW-32I	9/28/2007	GW	0.5 J	250	15	420	22	5700	5 J	20	4 J	320		14		
Deep	DW-32I	6/3/2008	GW	0.35 J	130 J	500 UJ	140 J	500 UJ	2200 J	500 UJ	500 UJ	500 UJ	330 J		500 UJ		
Deep	DW-32I	10/15/2009	GW	0.2 U	88	16	260	20	2600	6	14	2 J	140	400	21		
Deep	DW-32I	3/30/2010	GW	0.25 J	510	61	730	73	9900	16	51	5	240	1500	46		
Deep	DW-32I	3/30/2010	GW	0.32 J	520	60	730	74	11000	16	51	5	240	1600	46		
Deep	DW-32I	9/6/2011	GW		92	8	190	10	2100	2 J	7	1 J	110	270	11		
Deep	DW-32I	12/13/2011	GW		160	27	470	29	5300	8	21	2 J	140		29		
Deep	DW-32I	5/8/2012	GW		40	5 J	130	6	1500	2 J	4 J	0.8 U	96		6		
Deep	DW-32I	5/30/2013	GW	1 U	120	14	300	19	3200	6	14	2 J	110	300	17		
Deep	DW-32I	5/15/2014	GW		200	36	720	43	7400	12	31	3	100	660 j	36		
Deep	DW-32I	11/12/2014	GW		83	11	270	16	2400	4	10	0.5 U	46		15		
Deep	DW-32I	5/14/2015	GW	0.2 U	140	26	630	35	6400	7 J	24	6 J	110	550	24		
Deep	DW-32I	4/1/2016	GW	0.2 U	28	10	250	12	2000	4	8	1 U	33	250	13		
Deep	DW-32I	4/19/2017	GW	0.28 J	3	1	38	2	280	1	1	0.5 U	36	0.055 J	1		

Table 1 - Deep Groundwater Historical Results and Well Abandonment Rationale
Excluding Wells in Project Cub Area

Aquifer	Location	Date Sampled	Matrix	Perchlorate µg/L	111TCA µg/L	112TCA µg/L	11DCA µg/L	12DCA µg/L	11DCE µg/L	PCE µg/L	TCE µg/L	cis-12DCE µg/L	VC µg/L	14Dioxane µg/L	Benzene µg/L	Rationale*	Sample Depth
Screening Levels (SLs):				15	200	5	140	5	7	5	5	70	2	7.8	5		(ft)
Deep	DW-36D	9/28/2009	GW	0.2 U	60	0.8 U	39	1 U	280	0.8 U	1 U	0.8 U	2 J	70 U	0.5 U	Retain for Water Levels	219
Deep	DW-36D	9/28/2009	GW	0.2 U	57	0.8 U	36	1 U	260	0.8 U	1 U	0.8 U	2 J	70 U	0.5 U		
Deep	DW-36D	10/27/2009	GW	0.2 U	26	0.8 U	60	1 U	230	0.8 U	1 U	0.8 U	3 J	70 U	0.5 U		
Deep	DW-36D	11/23/2009	GW	0.2 U	33	0.8 U	60	1 U	260	0.8 U	1 U	0.8 U	4 J	70 U	0.5 U		
Deep	DW-36D	1/5/2010	GW	0.2 U	31	0.8 U	56	1 U	240	0.8 U	1 U	0.8 U	5 J	70 U	0.5 U		
Deep	DW-36D	2/3/2010	GW	2 U	37	0.8 U	57	1 U	240	0.8 U	1 U	0.8 U	6	70 U	0.5 U		
Deep	DW-36D	3/3/2010	GW	0.2 U	15	0.8 U	61	1 U	210	0.8 U	1 U	0.8 U	8	70 U	0.5 U		
Deep	DW-36D	4/7/2010	GW	2 U	25	0.8 U	63	1 U	230 J	0.8 U	1 U	0.8 U	14	70 U	0.5 U		
Deep	DW-36D	6/16/2010	GW	0.2 U	14	0.8 U	69	1 U	81	0.8 U	1 U	0.8 U	66	70 U	0.5 U		
Deep	DW-36D	8/10/2010	GW	2 U	18	0.8 U	68	1 U	23	0.8 U	1 U	0.8 U	40 J	70 U	0.5 U		
Deep	DW-36D	10/6/2010	GW	0.2 U	24	0.8 U	83	1 U	3 J	0.8 U	1 U	0.8 U	30	70 U	0.5 U		
Deep	DW-36D	12/7/2010	GW	0.2 U	10	0.8 U	78	1 U	9	0.8 U	1 U	0.8 U	37	70 U	0.5 U		
Deep	DW-36D	12/7/2010	GW	2 U	10	0.8 U	76	1 U	9	0.8 U	1 U	0.8 U	37	70 U	0.5 U		
Deep	DW-36D	2/3/2011	GW	2 U	7	0.8 U	83	1 U	3 J	0.8 U	1 U	0.8 U	21	70 U	0.5 U		
Deep	DW-36D	2/3/2011	GW	2 U	7	0.8 U	83	1 U	3 J	0.8 U	1 U	0.8 U	21	70 U	0.5 U		
Deep	DW-36D	6/8/2011	GW	0.2 U	2 J	0.8 U	92	1 U	0.8 U	0.8 U	1 U	0.8 U	9	70 U	0.5 U		
Deep	DW-36D	9/14/2011	GW	0.2 U	2 J	0.8 U	78	1 U	2 J	0.8 U	1 U	0.8 U	11		0.5 U		
Deep	DW-36D	12/13/2011	GW	0.2 U	0.8 U	0.8 U	94	1 U	0.8 U	0.8 U	1 U	0.8 U	1 U		0.5 U		
Deep	DW-36D	2/27/2012	GW	0.2 U	2 J	0.8 U	86	1 U	5 J	0.8 U	1 U	0.8 U	24	70 U	0.5 U		
Deep	DW-36D	5/9/2012	GW	0.2 U	1 J	0.8 U	83	1 U	1 J	0.8 U	1 U	0.8 U	7		0.5 U		
Deep	DW-36D	8/16/2012	GW	0.2 U	2 J	0.8 U	82	1 U	1 J	0.8 U	1 U	0.8 U	8		0.5 U		
Deep	DW-36D	11/6/2012	GW	0.2 U	0.8 U	0.8 U	20	1 U	0.8 U	0.8 U	1 U	0.8 U	1 U		0.5 U		
Deep	DW-36D	5/28/2013	GW	1 U	0.8 U	0.8 U	64	1 U	0.8 U	0.8 U	1 U	0.8 U	3 J		0.5 U		
Deep	DW-36D	11/19/2013	GW	0.2 U	0.8 U	0.8 U	11	1 U	0.9 J	0.8 U	1 U	0.8 U	1 U	70 U	0.5 U		
Deep	DW-36D	5/13/2014	GW	1 U	0.5 U	0.5 U	1	0.5 U	0.5 U	0.5 U	0.5 U	0.5 U	0.5 U		0.5 U		
Deep	DW-36D	11/12/2014	GW	1 U	0.5 U	0.5 U	72	0.5 U	4	0.5 U	0.5 U	0.5 U	19		0.5 U		

Table 1 - Deep Groundwater Historical Results and Well Abandonment Rationale
Excluding Wells in Project Cub Area

Aquifer	Location	Date Sampled	Matrix	Perchlorate µg/L	111TCA µg/L	112TCA µg/L	11DCA µg/L	12DCA µg/L	11DCE µg/L	PCE µg/L	TCE µg/L	cis-12DCE µg/L	VC µg/L	14Dioxane µg/L	Benzene µg/L	Rationale*	Sample Depth
Screening Levels (SLs):				15	200	5	140	5	7	5	5	70	2	7.8	5		(ft)
Deep	DW-72B	11/11/2002	GW		155	3.4	164	4.5	1232	2.9	3.2	1	2.2				
Deep	DW-72B	11/11/2002	GW		79.7	1.7	93	2.5	529	2.6	1.7	1 U	1				
Deep	DW-72B	5/13/2004	GW	416	52	0.8 U	7	1 U	260	4 J	1 U	0.8 U	1 U		0.5 U		
Deep	DW-72B	8/20/2008	GW	0.2 U	1 J	0.8 U	30	1 J	81	0.8 U	1 U	0.8 U	22	70 U	2 U		
Deep	DW-72B	8/20/2008	GW	0.2 U	1 J	0.8 U	29	1 J	79	0.8 U	1 U	0.8 U	22	70 U	2 U		
Deep	DW-72B	9/28/2009	GW	0.2 U	4 J	2 J	67 J	3 J	160	4 J	2 J	0.8 U	120	70 U	5		
Deep	DW-72B	11/23/2009	GW	0.2 U	3 J	2 J	75	1 U	130	0.8 U	2 J	0.8 U	120	70 U	5		
Deep	DW-72B	2/3/2010	GW	0.2 U	6	3 J	110	5	180	0.8 U	3 J	0.8 U	160	98 J	8		
Deep	DW-72B	4/7/2010	GW	0.2 U	5 J	3 J	110	5 J	170	0.8 U	3 J	0.8 U	140	120 J	8		
Deep	DW-72B	6/16/2010	GW	0.2 U	9	5 J	200	8	280	1 J	5	1 J	180	140 J	15		
Deep	DW-72B	8/10/2010	GW	0.2 U	8	4 J	180	8	260	1 J	5 J	1 J	280	170 J	14		
Deep	DW-72B	10/7/2010	GW	0.2 U	5 J	2 J	88	4 J	160	0.9 J	2 J	0.8 U	140	76 J	7		
Deep	DW-72B	12/7/2010	GW	0.2 U	5 J	3 J	130	6	210	1 J	3 J	0.8 U	180	170 J	10	Retain and Sample	206
Deep	DW-72B	2/3/2011	GW	2 U	0.8 U	0.8 U	1 J	1 U	1 J	0.8 U	1 U	0.8 U	1 U	70 U	0.5 U		
Deep	DW-72B	6/9/2011	GW	0.2 U	7	3 J	170	8	270	1 J	4 J	0.9 J	210	190 J	12		
Deep	DW-72B	9/15/2011	GW	0.2 U	4 J	2 J	100	5 J	190	0.9 J	3 J	0.8 U	110		8		
Deep	DW-72B	12/14/2011	GW	0.2 U	3 J	2 J	110	4 J	180	0.9 J	3 J	0.8 U	160		8		
Deep	DW-72B	5/10/2012	GW	0.2 U	5	3 J	150	6	340	1 J	4 J	0.9 J	220		11		
Deep	DW-72B	5/28/2013	GW	1 U	2 J	0.9 J	71	3 J	130	0.8 U	2 J	0.8 U	98	89 j	5 J		
Deep	DW-72B	11/20/2013	GW	0.2 U	2 J	1 J	61	3 J	280	0.8 U	2 J	0.8 U	130	73 J	3 J		
Deep	DW-72B	5/13/2014	GW	1 U	0.7 J	0.5 U	39	2	100	0.5 U	1	0.5 U	64		3		
Deep	DW-72B	11/11/2014	GW	1 U	2	2	95	4	270	0.6 J	2	0.6 J	130		7		
Deep	DW-72B	5/15/2015	GW	0.2 U	1	0.7 J	72	3	230	0.5 U	1	0.5 U	94	70	4		
Deep	DW-72B	4/1/2016	GW	0.2 U	2	1 J	100	4	310	0.5 U	3	0.6 J	130	91	7		
Deep	DW-72B	4/19/2017	GW	0.32 J	0.5 U	0.5 U	32	1	36	0.5 U	0.5 U	0.5 U	30	18	2		
Deep	IW-6	10/27/2005	GW	570000	9	0.8 U	3 J	1 U	29	0.8 U	1 U	0.8 U	1 U		0.5 U		
Deep	IW-6	7/16/2009	GW	5500	38	0.8 U	44	1 U	200	0.8 U	27	1 J	3 J	70 UJ	0.5 U		
Deep	IW-6	11/11/2010	GW		10	0.8 U	7	1 U	10	5 J	1 U	0.8 U	4 J	70 U	0.5 U		
Deep	IW-6	9/12/2011	GW	230000	2 J	0.8 U	8	1 U	20	6	1 U	0.8 U	2 J		0.5 U		
Deep	IW-6	12/14/2011	GW		0.8 U	0.8 U	3 J	1 U	3 J	0.8 U	1 U	0.8 U	1 J		0.5 U		
Deep	IW-6	5/11/2012	GW	180000	4 J	0.8 U	17	1 U	22	7	1 U	0.8 U	2 J		0.5 U	Retain and Sample	60
Deep	IW-6	5/30/2013	GW	110000	4 J	0.8 U	31	1 U	21	8	1 U	0.8 U	3 J	5.1	0.5 U		
Deep	IW-6	5/15/2014	GW		2	0.5 U	31	0.5 U	15	5	0.5 U	0.5 U	2		0.5 U		
Deep	IW-6	11/12/2014	GW		1 J	0.5 U	22	0.5 U	7	4	0.5 U	0.5 U	0.8 J		0.5 U		
Deep	IW-6	5/15/2015	GW	100000	1	0.5 U	31	0.5 U	12	5	0.5 U	0.5 U	2		0.5 U		
Deep	IW-6	4/1/2016	GW	4500	0.5 U	0.5 U	10	0.5 U	2	0.9 J	0.5 U	0.5 U	0.5 U		0.5 U		
Deep	IW-6	4/20/2017	GW	290	0.5 U	0.5 U	2	0.5 U	0.5 U	0.5 U	0.5 U	0.5 U	0.5 U		0.5 U		
Deep	IW-8	10/27/2005	GW	24	2 J	0.8 U	1 U	1 U	3 J	0.8 U	1 U	0.8 U	1 U		0.5 U	Retain - Injection Well	191
Deep	IW-7	10/27/2005	GW	24	0.8 U	0.8 U	1 U	1 U	0.8 U	0.8 U	1 U	0.8 U	1 U		0.5 U	Abandonment approved in 2011 - Retain as backup to IW-8 injection point.	60
Deep	DW 52-01	11/4/2008	GW	2 U	0.8 U	0.8 U	1 U	1 U	0.8 U	0.8 U	1 U	0.8 U	1 U	70 U	0.5 U		
Deep	DW 52-01	10/5/2009	GW	2 U	0.8 U	0.8 U	1 U	1 U	0.8 U	0.8 U	1 U	0.8 U	1 U	70 U	0.5 U		
Deep	DW 52-01	3/26/2010	GW	2 U	0.8 U	0.8 U	1 U	1 U	0.8 U	0.8 U	1 U	0.8 U	1 U	70 U	0.5 U	Abandon: below SLs for >3 years	402
Deep	DW 52-01	3/26/2010	GW	2 U	0.8 U	0.8 U	1 U	1 U	0.8 U	0.8 U	1 U	0.8 U	1 U	70 U	0.5 U		
Deep	DW 52-01	5/22/2013	GW	1.5 j	0.8 U	0.8 U	1 U	1 U	0.8 U	0.8 U	1 U	0.8 U	1 U		0.5 U		

Table 1 - Deep Groundwater Historical Results and Well Abandonment Rationale
Excluding Wells in Project Cub Area

Aquifer	Location	Date Sampled	Matrix	Perchlorate µg/L	111TCA µg/L	112TCA µg/L	11DCA µg/L	12DCA µg/L	11DCE µg/L	PCE µg/L	TCE µg/L	cis-12DCE µg/L	VC µg/L	14Dioxane µg/L	Benzene µg/L	Rationale*	Sample Depth
Screening Levels (SLs):				15	200	5	140	5	7	5	5	70	2	7.8	5		(ft)
Deep	DW 68-01	11/4/2008	GW	2 U	0.8 U	0.8 U	1 U	1 U	0.8 U	0.8 U	1 U	0.8 U	1 U	70 U	0.5 U	Abandon: below SLs for >3 years	457
Deep	DW 68-01	10/5/2009	GW	2 U	0.9 J	0.8 U	1 U	1 U	1 J	0.8 U	1 U	0.8 U	1 U	70 U	0.5 U		
Deep	DW 68-01	3/26/2010	GW	2 U	0.8 U	0.8 U	1 U	1 U	0.8 U	0.8 U	1 U	0.8 U	1 U	70 U	0.5 U		
Deep	DW 68-01	5/22/2013	GW	1 U	0.8 U	0.8 U	1 U	1 U	0.8 U	0.8 U	1 U	0.8 U	1 U		0.5 U		
Deep	DW 106-01	6/23/2008	GW	0.24 J	0.8 U	0.8 U	1 U	1 U	0.8 U	2 J	1 U	0.8 U	1 U	70 U	0.5 U	Abandon: below SLs for 3 years (2008-2010)	253
Deep	DW 106-01	10/9/2009	GW	0.2 U	0.8 U	0.8 U	1 U	1 U	0.8 U	1 J	3 J	1 J	1 U	70 U	0.5 U		
Deep	DW 106-01	10/9/2009	GW	0.2 U	0.8 U	0.8 U	1 U	1 U	0.8 U	1 J	3 J	1 J	1 U	70 U	0.5 U		
Deep	DW 106-01	3/23/2010	GW	0.2 U	0.8 U	0.8 U	1 U	1 U	0.8 U	0.8 U	1 J	1 J	1 U	70 U	0.5 U		
Deep	DW-5	5/21/2003	GW	12.7	1 U	1 U	1 U	1 U	1 U	1	1 U	1 U	1 U			Abandon: below SLs for >3 years	185
Deep	DW-5	4/5/2004	GW	5.7 J	0.8 U	0.8 U	1 U	1 U	0.8 U	0.8 U	1 U	0.8 U	1 U		0.5 U		
Deep	DW-5	5/10/2004	GW	8.7	0.8 U	0.8 U	1 U	1 U	0.8 U	0.8 U	1 U	0.8 U	1 U		0.5 U		
Deep	DW-5	8/17/2004	GW	0.7 U	0.8 U	0.8 U	1 U	1 U	0.8 U	0.8 U	1 U	0.8 U	1 U		0.5 U		
Deep	DW-5	11/10/2004	GW	0.7 U	3 J	0.8 U	1 U	1 U	8	6	1 U	0.8 U	1 U		0.5 U		
Deep	DW-5	2/16/2005	GW	0.7 U	0.8 U	0.8 U	1 U	1 U	5 J	17	1 U	0.8 U	1 U		0.5 U		
Deep	DW-5	5/10/2005	GW	0.7 U	0.8 U	0.8 U	1 U	1 U	0.8 U	0.8 U	1 U	0.8 U	1 U		0.5 U		
Deep	DW-5	5/9/2006	GW	0.2 U	0.8 U	0.8 U	1 U	1 U	0.8 U	0.8 U	1 U	0.8 U	1 U		0.5 U		
Deep	DW-5	10/19/2009	GW	0.2 U	0.8 U	0.8 U	1 U	1 U	0.8 U	0.8 U	1 U	0.8 U	1 U	70 U	0.5 U		
Deep	DW-5	3/19/2010	GW	0.2 U	0.8 U	0.8 U	1 U	1 U	0.8 U	0.8 U	1 U	0.8 U	1 U	70 U	0.5 U		
Deep	DW-5	5/23/2013	GW	1 U	0.8 U	0.8 U	6	1 U	1 J	0.8 U	1 U	0.8 U	1 U		0.5 U		
Deep	DW-14	5/16/2002	GW		1 U	1 U	1 U	1 U	1 U	1 U	1 U	1 U	1 U			Abandon: below SLs for >3 years	185
Deep	DW-14	5/21/2003	GW	2 U	1 U	1 U	1 U	1 U	1 U	1 U	1 U	1 U	1 U				
Deep	DW-14	3/25/2004	GW	4.4 J	7	0.8 U	1 J	1 U	10	4 J	1 U	0.8 U	1 U		0.5 U		
Deep	DW-14	5/13/2004	GW	1.3 U	4 J	0.8 U	1 U	1 U	6	2 J	1 U	0.8 U	1 U		0.5 U		
Deep	DW-14	8/18/2004	GW	0.7 U	3 J	0.8 U	1 U	1 U	6	2 J	1 U	0.8 U	1 U		0.5 U		
Deep	DW-14	11/11/2004	GW	0.7 U	1 J	0.8 U	1 U	1 U	3 J	1 J	1 U	0.8 U	1 U		0.5 U		
Deep	DW-14	2/16/2005	GW	0.7 U	0.8 U	0.8 U	1 U	1 U	0.8 U	0.8 U	1 U	0.8 U	1 U		0.5 U		
Deep	DW-14	5/10/2006	GW	7.3 J	0.8 U	0.8 U	1 U	1 U	3 J	1 J	1 U	0.8 U	1 U		0.5 U		
Deep	DW-14	10/22/2009	GW	0.2 U	0.8 U	0.8 U	1 U	1 U	2 J	0.8 U	1 U	0.8 U	1 U	70 U	0.5 U		
Deep	DW-14	3/25/2010	GW	0.2 U	0.8 U	0.8 U	1 U	1 U	2 J	0.8 U	1 U	0.8 U	1 U	70 U	0.5 U		
Deep	DW-14	5/28/2013	GW	1 U	0.8 U	0.8 U	1 U	1 U	1 J	0.8 U	1 U	0.8 U	1 U		0.5 U		
Deep	DW-17	8/19/2002	GW		5 U	5 U	5 U	5 U	5 U	5 U	5 U	5 U	5 U		5 U	Abandon: below SLs for >3 years	220
Deep	DW-17	2/14/2003	GW		1 UJ	1 UJ	1 UJ	1 UJ	1 UJ	1 UJ	1 UJ	1 UJ	1 UJ				
Deep	DW-17	5/20/2003	GW	2 U	1 U	1 U	1 U	1 U	1 U	1 U	1 U	1 U	1 U				
Deep	DW-17	11/22/2003	GW	4 U	1 U	1 U	1 U	1 U	1 U	1 U	1 U	1 U	1 U				
Deep	DW-17	3/25/2004	GW	2.6 U	0.8 U	0.8 U	1 U	1 U	0.8 U	0.8 U	1 U	0.8 U	1 U		0.5 U		
Deep	DW-17	5/10/2005	GW	0.7 U	0.8 U	0.8 U	1 U	1 U	0.8 U	0.8 U	1 U	0.8 U	1 U		0.5 U		
Deep	DW-17	9/28/2007	GW	0.2 U	0.8 U	0.8 U	1 U	1 U	0.8 U	0.8 U	1 U	0.8 U	1 U		0.5 U		
Deep	DW-17	5/28/2008	GW	1 U	5 UJ	5 UJ	5 UJ	5 UJ	5 UJ	5 UJ	5 UJ	5 UJ	5 UJ		5 UJ		
Deep	DW-17	10/22/2009	GW	2 U	0.8 U	0.8 U	1 U	1 U	0.8 U	0.8 U	1 U	0.8 U	1 U	70 U	0.5 U		
Deep	DW-17	3/25/2010	GW	2 U	0.8 U	0.8 U	1 U	1 U	0.8 U	0.8 U	1 U	0.8 U	1 U	70 U	0.5 U		
Deep	DW-17	5/28/2013	GW	1 U	0.8 U	0.8 U	1 U	1 U	0.8 U	0.8 U	1 U	0.8 U	1 U	0.057 J	0.5 U		
Deep	DW-26S	11/9/2004	GW	2.6 J	5 J	0.8 U	1 U	1 U	45	45	1 U	0.8 U	1 U		0.5 U	Abandon: below SLs or non-detect for 3 years	36
Deep	DW-26S	2/17/2005	GW	0.7 U	0.8 U	0.8 U	1 U	1 U	16	25	1 U	0.8 U	1 U		0.5 U		
Deep	DW-26S	6/5/2008	GW		10 UJ	10 UJ	10 UJ	10 UJ	10 UJ	10 UJ	10 UJ	10 UJ	10 UJ		10 UJ		
Deep	DW-26S	10/13/2009	GW	0.83 J	0.8 U	0.8 U	1 U	1 U	2 J	1 J	1 U	0.8 U	1 U	70 U	0.5 U		
Deep	DW-26S	4/7/2010	GW	2 U	0.8 U	0.8 U	1 U	1 U	0.8 U	2 J	1 U	0.8 U	1 U	70 U	0.5 U		
Deep	DW-26S	5/23/2013	GW	1 U													

Table 1 - Deep Groundwater Historical Results and Well Abandonment Rationale
Excluding Wells in Project Cub Area

Aquifer	Location	Date Sampled	Matrix	Perchlorate µg/L	111TCA µg/L	112TCA µg/L	11DCA µg/L	12DCA µg/L	11DCE µg/L	PCE µg/L	TCE µg/L	cis-12DCE µg/L	VC µg/L	14Dioxane µg/L	Benzene µg/L	Rationale*	Sample Depth
Screening Levels (SLs):				15	200	5	140	5	7	5	5	70	2	7.8	5		(ft)
Deep	DW-29D	11/9/2004	GW	627	16	0.8 U	4 J	1 U	54	4 J	1 U	0.8 U	1 U		0.5 U	Abandon: below SLs for >3 years	200
Deep	DW-29D	2/17/2005	GW	244	12	0.8 U	2 J	1 U	34	7	1 U	0.8 U	1 U		0.5 U		
Deep	DW-29D	5/11/2005	GW	131	10	0.8 U	2 J	1 U	28	0.8 U	1 U	0.8 U	1 U		0.5 U		
Deep	DW-29D	5/10/2006	GW	16	0.8 U	0.8 U	4 J	1 U	18	0.8 U	1 U	0.8 U	1 U		0.5 U		
Deep	DW-29D	2/19/2007	GW	100	0.8 U	0.8 U	5 J	1 U	15	0.8 U	1 U	0.8 U	2 J		0.5 U		
Deep	DW-29D	9/27/2007	GW	0.2 U	0.8 U	0.8 U	10	1 U	20	0.8 U	1 U	0.8 U	3 J		0.5 U		
Deep	DW-29D	6/2/2008	GW	1 U	1.2 J	5 UJ	25 J	5 UJ	100 J	5 UJ	5 UJ	5 UJ	2.7 J		5 UJ		
Deep	DW-29D	9/25/2009	GW	0.2 U	13	0.8 U	52	1 U	200	0.8 U	1 U	0.8 U	3 J	70 U	0.5 U		
Deep	DW-29D	11/23/2009	GW	1 U	7	0.8 U	67	1 U	220	0.8 U	1 U	0.8 U	4 J	70 U	0.5 U		
Deep	DW-29D	11/23/2009	GW	1 U	7	0.8 U	67	1 U	220	0.8 U	1 U	0.8 U	4 J	70 U	0.5 U		
Deep	DW-29D	2/3/2010	GW	2 U	14	0.8 U	61	1 U	190	0.8 U	1 U	0.8 U	9	70 U	0.5 U		
Deep	DW-29D	4/7/2010	GW	2 U	7	0.8 U	61	1 U	170	0.8 U	1 U	0.8 U	17	70 U	0.5 U		
Deep	DW-29D	6/16/2010	GW	0.2 U	3 J	0.8 U	65	1 U	120	0.8 U	1 U	0.8 U	44	70 U	0.5 U		
Deep	DW-29D	8/10/2010	GW	0.2 U	4 J	0.8 U	57	1 U	47	0.8 U	1 U	0.8 U	25	70 U	0.5 U		
Deep	DW-29D	10/6/2010	GW	0.2 U	5	0.8 U	75	1 U	37	0.8 U	1 U	0.8 U	30	70 U	0.5 U		
Deep	DW-29D	12/6/2010	GW	0.2 UJ	4 J	0.8 U	74 J	1 U	20	0.8 U	1 U	0.8 U	24	70 U	0.5 U		
Deep	DW-29D	2/3/2011	GW	2 U	3 J	0.8 U	72	1 U	15	0.8 U	1 U	0.8 U	14	70 U	0.5 U		
Deep	DW-29D	6/8/2011	GW	0.2 U	0.9 J	0.8 U	79	1 U	7	0.8 U	1 U	0.8 U	7	70 U	0.5 U		
Deep	DW-29D	9/15/2011	GW	0.2 U	0.8 U	0.8 U	70	1 U	3 J	0.8 U	1 U	0.8 U	4 J		0.5 U		
Deep	DW-29D	9/15/2011	GW	0.2 U	0.8 U	0.8 U	68	1 U	3 J	0.8 U	1 U	0.8 U	4 J		0.5 U		
Deep	DW-29D	12/13/2011	GW	0.2 U	0.8 U	0.8 U	77	1 U	0.9 J	0.8 U	1 U	0.8 U	4 J		0.5 U		
Deep	DW-29D	5/10/2012	GW	0.2 U	0.8 U	0.8 U	74	1 U	2 J	0.8 U	1 U	0.8 U	4 J		0.5 U		
Deep	DW-29D	5/28/2013	GW	1 U	0.8 U	0.8 U	70	1 U	2 J	0.8 U	1 U	0.8 U	3 J		0.5 U		
Deep	DW-29D	11/19/2013	GW	0.2 U	0.8 U	0.8 U	43	1 U	0.8 U	0.8 U	1 U	0.8 U	1 J	70 U	0.5 U		
Deep	DW-29D	5/13/2014	GW	1 U	0.5 U	0.5 U	37	0.5 U	0.9 J	0.5 U	0.5 U	0.5 U	2		0.5 U		
Deep	DW-29D	11/11/2014	GW	7.9	0.5 U	0.5 U	6	0.5 U	0.7 J	0.6 J	0.5 U	0.5 U	0.5 U		0.5 U		
Deep	DW-34	2/15/2006	GW	0.91 J	0.8 U	0.8 U	2 J	1 U	11	3 J	1 U	0.8 U	1 U		0.5 U	Abandon: below SLs for at least 3 years	225
Deep	DW-34	3/6/2006	GW	8.5	2 J	0.8 U	3 J	1 U	14	3 J	1 U	0.8 U	1 U		0.5 U		
Deep	DW-34	4/25/2006	GW	0.2 U	1 J	0.8 U	3 J	1 U	11	3 J	1 U	0.8 U	1 U		0.5 U		
Deep	DW-34	5/12/2006	GW	0.2 U	1 J	0.8 U	3 J	1 U	13	3 J	1 U	0.8 U	1 U		0.5 U		
Deep	DW-34	7/7/2006	GW	2.7	1 J	0.8 U	3 J	1 U	15	3 J	1 U	0.8 U	1 U		0.5 U		
Deep	DW-34	8/16/2006	GW	0.29 J	0.8 U	0.8 U	3 J	1 U	11	2 J	1 U	0.8 U	1 U		0.5 U		
Deep	DW-34	9/21/2006	GW	0.59 J	1 J	0.8 U	3 J	1 U	18	3 J	1 U	0.8 U	1 U		0.5 U		
Deep	DW-34	10/26/2006	GW	5.4	0.9 J	0.8 U	3 J	1 U	13	3 J	1 U	0.8 U	1 U		0.5 U		
Deep	DW-34	11/13/2006	GW	0.4 J	0.8 U	0.8 U	3 J	1 U	13	3 J	1 U	0.8 U	1 U		0.5 U		
Deep	DW-34	2/16/2007	GW	2.3	1 J	0.8 U	3 J	1 U	17	3 J	1 U	0.8 U	1 U		0.5 U		

Table 1 - Deep Groundwater Historical Results and Well Abandonment Rationale
Excluding Wells in Project Cub Area

Aquifer	Location	Date Sampled	Matrix	Perchlorate µg/L	111TCA µg/L	112TCA µg/L	11DCA µg/L	12DCA µg/L	11DCE µg/L	PCE µg/L	TCE µg/L	cis-12DCE µg/L	VC µg/L	14Dioxane µg/L	Benzene µg/L	Rationale*	Sample Depth
Screening Levels (SLs):				15	200	5	140	5	7	5	5	70	2	7.8	5		(ft)
Deep	DW-34	4/20/2007	GW	0.6 J													
Deep	DW-34	5/2/2007	GW	0.2 J													
Deep	DW-34	5/16/2007	GW	5 U													
Deep	DW-34	6/5/2007	GW	3 U													
Deep	DW-34	6/12/2007	GW	5 U													
Deep	DW-34	6/26/2007	GW	0.2 U													
Deep	DW-34	7/13/2007	GW	0.2 U													
Deep	DW-34	7/24/2007	GW	0.2 U													
Deep	DW-34	8/7/2007	GW	0.2 U													
Deep	DW-34	9/5/2007	GW	0.2 UJ													
Deep	DW-34	9/19/2007	GW	0.2 U													
Deep	DW-34	10/4/2007	GW	0.2 U													
Deep	DW-34	10/15/2007	GW	0.2 U													
Deep	DW-34	11/1/2007	GW	2 U													
Deep	DW-34	11/14/2007	GW	2 U													
Deep	DW-34	11/27/2007	GW	2.9 J													
Deep	DW-34	12/11/2007	GW	9.3 J													
Deep	DW-34	12/28/2007	GW	2 U													
Deep	DW-34	1/9/2008	GW	2.1 J													
Deep	DW-34	2/7/2008	GW	2 U													
Deep	DW-34	2/21/2008	GW	2 U													
Deep	DW-34	3/4/2008	GW	2 U													
Deep	DW-34	3/18/2008	GW	2 U												Abandon: below SLs for at least 3 years (cont.)	225 (cont.)
Deep	DW-34	4/17/2008	GW	2 U													
Deep	DW-34	5/1/2008	GW	2 U													
Deep	DW-34	5/15/2008	GW	1 U													
Deep	DW-34	5/28/2008	GW	1 U													
Deep	DW-34	6/11/2008	GW	1 U													
Deep	DW-34	6/26/2008	GW	10													
Deep	DW-34	7/10/2008	GW	0.8 U													
Deep	DW-34	7/24/2008	GW	0.8 U													
Deep	DW-34	8/7/2008	GW	0.2 U													
Deep	DW-34	8/21/2008	GW	0.2 U													
Deep	DW-34	9/4/2008	GW	13													
Deep	DW-34	9/18/2008	GW	2 U													
Deep	DW-34	9/30/2008	GW	18													
Deep	DW-34	10/15/2008	GW	2 U													
Deep	DW-34	10/30/2008	GW	0.2 U													
Deep	DW-34	11/12/2008	GW	0.2 U													
Deep	DW-34	11/25/2008	GW	0.2 U													
Deep	DW-34	12/10/2008	GW	0.2 U													
Deep	DW-34	12/23/2008	GW	2 U													
Deep	DW-34	1/8/2009	GW	2 U													
Deep	DW-34	10/12/2009	GW	0.2 U	0.8 U	0.8 U	2 J	1 U	6	0.8 U	1 U	0.8 U	1 U	70 U	0.5 U		
Deep	DW-34	4/1/2010	GW	2 U	0.8 U	0.8 U	2 J	1 U	4 J	0.8 U	1 U	0.8 U	1 U	70 U	0.5 U		
Deep	DW-34	9/12/2011	GW		0.8 U	0.8 U	1 J	1 U	2 J	0.8 U	1 U	0.8 U	1 U		0.5 U		

Table 1 - Deep Groundwater Historical Results and Well Abandonment Rationale
Excluding Wells in Project Cub Area

Aquifer	Location	Date Sampled	Matrix	Perchlorate µg/L	111TCA µg/L	112TCA µg/L	11DCA µg/L	12DCA µg/L	11DCE µg/L	PCE µg/L	TCE µg/L	cis-12DCE µg/L	VC µg/L	14Dioxane µg/L	Benzene µg/L	Rationale*	Sample Depth
Screening Levels (SLs):				15	200	5	140	5	7	5	5	70	2	7.8	5		(ft)
Deep	DW CM-01	6/24/2008	GW	52 J	0.8 U	0.8 U	1 U	1 U	0.8 U	0.8 U	1 U	0.8 U	1 U	70 U	0.5 U	Abandon: below SL for perchlorate in 2014, but slightly exceeded earlier; below SLs for VOCs in 2008-2010; retaining nearby BW CM-03 (50 ft), with similar perchlorate concentrations	72
Deep	DW CM-01	10/9/2009	GW	46	0.8 U	0.8 U	1 U	1 U	0.8 U	0.8 U	1 U	0.8 U	1 U	70 U	0.5 U		
Deep	DW CM-01	3/24/2010	GW	45	0.8 U	0.8 U	1 U	1 U	0.8 U	0.8 U	1 U	0.8 U	1 U	70 U	0.5 U		
Deep	DW CM-01	9/12/2011	GW	46													
Deep	DW CM-01	4/3/2012	GW	52													
Deep	DW CM-01	5/29/2013	GW	42													
Deep	DW CM-01	5/15/2014	GW	10													
Deep	DW-3	11/8/2004	GW	0.7 U	33	0.8 U	17	1 U	46	58	24	16	1 J		5		
Deep	DW-3	2/16/2005	GW	0.7 U	1 J	0.8 U	18	1 U	12	79	29	21	1 J		6		
Deep	DW-3	5/10/2006	GW	51	0.8 U	0.8 U	20	1 U	13	53	58	26	1 J		7		
Deep	DW-3	8/17/2006	GW	0.2 U	0.8 U	0.8 U	10	1 U	7	46	41		1 U		4 J		
Deep	DW-3	8/17/2006	GW	0.2 U	0.8 U	0.8 U	10	1 U	7	40	36		1 U		4 J		
Deep	DW-3	11/16/2006	GW	1.1	0.8 U	0.8 U	11	1 U	8	49	49		1 U		4 J		
Deep	DW-3	11/16/2006	GW	1.6	0.8 U	0.8 U	11	1 U	7	47	46		1 U		4 J		
Deep	DW-3	2/20/2007	GW	16	0.8 U	0.8 U	17	1 U	10	30	86	30	1 J		6	Abandon: exceeds SLs for PCE and TCE with stable to decreasing concentrations; redundant with ongoing monitoring downgradient at DW-18 (350 ft) with similar COC profile and depth	340
Deep	DW-3	9/27/2007	GW	0.2 U	0.8 U	0.8 U	18	1 U	12	17	31	98	4 J		6		
Deep	DW-3	5/21/2008	GW	1 U	50 UJ	50 UJ	50 UJ	50 UJ	50 UJ	50 UJ	50 UJ	79 J	50 UJ		50 UJ		
Deep	DW-3	10/22/2009	GW	0.2 U	0.8 U	0.8 U	15	1 U	9	9	18	88	3 J	70 U	4 J		
Deep	DW-3	3/31/2010	GW	2 U	0.8 U	0.8 U	14	1 U	9	8	15	88	5	70 U	5 J		
Deep	DW-3	8/31/2011	GW		0.8 U	0.8 U	14	1 U	8	10	18	72	2 J		3 J		
Deep	DW-3	12/12/2011	GW		0.8 U	0.8 U	12	1 U	8	9	16	66	2 J		2 J		
Deep	DW-3	5/4/2012	GW		0.8 U	0.8 U	13	1 U	9	17	26	61	2 J		2 J		
Deep	DW-3	5/23/2013	GW	1 U	0.8 U	0.8 U	14	1 U	7	8	17	78	2 J	3.2	2 J		
Deep	DW-3	5/14/2014	GW		0.5 U	0.5 U	12	0.5 U	8	17	27	53	0.8 J		0.5 U		
Deep	DW-3	11/11/2014	GW		0.5 U	0.5 U	12	0.5 U	6	12	20	45	0.5 U		0.5 U		
Deep	DW-3	5/15/2015	GW	2.3	0.5 U	0.5 U	11	0.5 U	6	9	19	46	0.7 J		0.7 J		
Deep	DW-3	3/31/2016	GW	0.7 J	0.5 U	0.5 U	11	0.5 U	7	8	20	48	0.6 J		0.5 U		
Deep	DW-3	4/19/2017	GW	0.3 J	0.5 U	0.5 U	12	0.5 U	7	11	30	46	0.8 J		4		

Table 1 - Deep Groundwater Historical Results and Well Abandonment Rationale
Excluding Wells in Project Cub Area

Aquifer	Location	Date Sampled	Matrix	Perchlorate µg/L	111TCA µg/L	112TCA µg/L	11DCA µg/L	12DCA µg/L	11DCE µg/L	PCE µg/L	TCE µg/L	cis-12DCE µg/L	VC µg/L	14Dioxane µg/L	Benzene µg/L	Rationale*	Sample Depth
Screening Levels (SLs):				15	200	5	140	5	7	5	5	70	2	7.8	5		(ft)
Deep	DW-24	4/6/2004	GW	1600	24	2 U	2 U	2 U	340	1300	2 U	2 U	2 U		1 U	Abandon: exceeded SLs for perchlorate, PCE, and 11DCE when last sampled in 2014; within capture zone of DW-13; redundant with downgradient well DW-28D (195 ft) with similar depth and lower concentrations, and DW-26I (92 ft) which is shallower, but has similar VOCs, and nearby sidegradient well DW-72B (206 ft) with a similar depth	185
Deep	DW-24	4/20/2004	GW											3 J			
Deep	DW-24	8/20/2004	GW	1300	16	0.8 U	2 J	1 U	250	670	1 U	0.8 U	1 U		0.5 U		
Deep	DW-24	8/20/2004	GW	1340	16	0.8 U	2 J	1 U	240	650	1 U	0.8 U	1 U		0.5 U		
Deep	DW-24	9/1/2004	GW	1200	21 J	4 U	5 U	5 U	340	1700	5 U	4 U	5 U		3 U		
Deep	DW-24	9/1/2004	GW	999													
Deep	DW-24	11/10/2004	GW	41.8	13	0.8 U	2 J	1 U	200	220	1 U	0.8 U	1 U		0.5 U		
Deep	DW-24	2/16/2005	GW	24.6	10	0.8 U	2 J	1 U	200	190	1 U	0.8 U	1 U		0.5 U		
Deep	DW-24	2/16/2005	GW	19.4	10	0.8 U	2 J	1 U	200	190	1 U	0.8 U	1 U		0.5 U		
Deep	DW-24	5/9/2006	GW	75	4 J	0.8 U	1 U	1 U	110	130	1 U	0.8 U	1 U		0.5 U		
Deep	DW-24	2/16/2007	GW	170	10	0.8 U	1 J	1 U	210	500	1 J	5	1 U		0.5 U		
Deep	DW-24	9/29/2009	GW	200	0.8 U	0.8 U	2 J	1 U	36	270	2 J	0.8 U	1 U	70 U	0.5 U		
Deep	DW-24	4/6/2010	GW	310	2 J	2 U	2 U	2 U	82	960	2 U	3 J	2 U	140 U	1 U		
Deep	DW-24	4/6/2010	GW	310	3 J	0.8 U	2 J	1 U	100	980	2 J	4 J	1 U	70 U	0.5 U		
Deep	DW-24	9/9/2011	GW	91	5 UJ	0.8 U	45	1 U	29	190	1 U	0.8 U	9		0.5 U		
Deep	DW-24	9/9/2011	GW	88	5 UJ	0.8 U	45	1 U	30	190	1 U	0.8 U	10		0.5 U		
Deep	DW-24	5/11/2012	GW	62	2 J	0.8 U	54	1 U	18	160	2 J	1 J	5		0.5 U		
Deep	DW-24	5/22/2013	GW	41	0.9 J	0.8 U	54	1 U	11	120	3 J	6	3 J	4	0.5 U		
Deep	DW-24	5/22/2013	GW	40	1 J	0.8 U	54	1 U	11	110	3 J	6	3 J	4.3	0.5 U		
Deep	DW-24	5/13/2014	GW	440	2	0.5 U	9	0.5 U	130	900	3	2	0.5 J		0.5 U		
Deep	DW-26D	11/9/2004	GW	3.9 J	15	0.8 U	1 U	1 U	25	4 J	1 U	0.8 U	1 U		0.5 U	Abandon: exceeded SLs for 11DCE and VC when last sampled in 2014, with decreasing trends; within capture zone of DW-13; redundant with nearby DW-72B (206 ft) with similar COCs; shallower DW-26I (92 ft) is retained with similar COC profile	240
Deep	DW-26D	2/17/2005	GW	0.7 U	0.8 U	0.8 U	1 U	1 U	3 J	0.8 U	1 U	0.8 U	1 U		0.5 U		
Deep	DW-26D	9/28/2007	GW	0.2 U	0.8 U	0.8 U	2 J	1 U	23	7	1 U	0.8 U	1 U		0.5 U		
Deep	DW-26D	5/15/2008	GW	1 U	500 UJ	500 UJ	500 UJ	500 UJ	500 UJ	500 UJ	500 UJ	500 UJ	500 UJ		500 UJ		
Deep	DW-26D	5/15/2008	GW	1 U	500 UJ	500 UJ	500 UJ	500 UJ	500 UJ	500 UJ	500 UJ	500 UJ	500 UJ		500 UJ		
Deep	DW-26D	9/28/2009	GW	0.2 U	0.8 U	0.8 U	1 U	1 U	4 J	2 J	1 U	0.8 U	1 U	70 U	0.5 U		
Deep	DW-26D	4/6/2010	GW	2.5	0.8 U	0.8 U	2 J	1 U	22	38	1 U	0.8 U	1 U	70 U	0.5 U		
Deep	DW-26D	9/8/2011	GW		1 J	0.8 U	36	1 U	34	8	1 U	0.8 U	11		0.5 U		
Deep	DW-26D	5/11/2012	GW		0.8 U	0.8 U	43	1 U	17	13	1 U	0.8 U	7		0.5 U		
Deep	DW-26D	5/23/2013	GW	1 U	0.8 U	0.8 U	59	1 U	10	9	3 J	0.8 J	6		0.5 U		
Deep	DW-26D	5/13/2014	GW		0.5 U	0.5 U	41	0.5 U	10	2	3	56	4		0.5 U		
Deep	DW-28S	11/8/2004	GW	45200	760	3 J	81	4 J	590	7	1 U	0.8 U	1 U		0.5 U	Abandon: exceeded SLs for perchlorate, 11DCE, and 1,4-dioxane, with decreasing trends for perchlorate and 11DCE; within DW-13 capture zone; redundant in DW-28 cluster (retaining DW-28I and DW-28D); redundant with nearby monitoring at IW-6 based on depth (60 ft) and similar COC profile	33
Deep	DW-28S	2/16/2005	GW	43100	780	2 J	73	4 J	540	3 J	1 U	0.8 U	1 U		0.5 U		
Deep	DW-28S	5/10/2005	GW	31900	410	2 J	72	3 J	280	2 J	1 U	0.8 U	1 U		0.5 U		
Deep	DW-28S	2/15/2006	GW	24000	290	2 J	73	2 J	270	2 J	1 U	0.8 U	1 U		0.5 U		
Deep	DW-28S	5/12/2006	GW	13000	250	1 J	69	2 J	210	2 J	1 U	0.8 U	1 U		0.5 U		
Deep	DW-28S	8/16/2006	GW	12000	150	0.9 J	65	1 J	120	0.9 J	1 U	0.8 U	1 U		0.5 U		
Deep	DW-28S	11/16/2006	GW	8400	130	0.8 U	58	1 U	140	1 J	1 U	0.8 U	1 U		0.5 U		
Deep	DW-28S	2/16/2007	GW	4400	100	0.8 U	64	1 U	96	1 J	1 U	0.8 U	1 U		0.5 U		
Deep	DW-28S	9/27/2007	GW	2700	36	0.8 U	48	1 U	59	0.8 U	1 U	0.8 U	1 U		0.5 U		
Deep	DW-28S	6/2/2008	GW	640	9.6 J	5 UJ	36 J	5 UJ	27 J	5 UJ	5 UJ	5 UJ	5 UJ		5 UJ		
Deep	DW-28S	9/23/2009	GW	720	11	0.8 U	40	1 U	42	0.8 U	1 U	0.8 U	1 U	70 U	0.5 U		
Deep	DW-28S	3/30/2010	GW	240	5 J	0.8 U	36	1 U	23	0.8 U	1 U	0.8 U	1 U	70 U	0.5 U		
Deep	DW-28S	9/8/2011	GW	670	10	0.8 U	31	1 U	32	0.8 U	1 U	0.8 U	1 U	9.5 J	0.5 U		
Deep	DW-28S	5/23/2013	GW	530	4 J	0.8 U	25	1 U	14	0.8 U	1 U	0.8 U	1 U	17	0.5 U		

Table 1 - Deep Groundwater Historical Results and Well Abandonment Rationale
Excluding Wells in Project Cub Area

Aquifer	Location	Date Sampled	Matrix	Perchlorate µg/L	111TCA µg/L	112TCA µg/L	11DCA µg/L	12DCA µg/L	11DCE µg/L	PCE µg/L	TCE µg/L	cis-12DCE µg/L	VC µg/L	14Dioxane µg/L	Benzene µg/L	Rationale*	Sample Depth
Screening Levels (SLs):				15	200	5	140	5	7	5	5	70	2	7.8	5		(ft)
Deep	DW-28DD	9/23/2009	GW	3.9	14	0.8 U	27	1 U	140	17	2 J	0.8 U	1 J	70 U	0.5 U	Abandon: exceeded SL for VC, with decreasing trend; within DW-13 capture zone; redundant in DW-28 cluster, with lowest total COC concentrations in this cluster.	293
Deep	DW-28DD	3/29/2010	GW	5.8 J	29	0.8 U	32	1 U	180	9	1 U	0.8 U	2 J	70 U	0.5 U		
Deep	DW-28DD	10/7/2010	GW	4.6	22	0.8 U	54	1 U	73	5	1 U	0.8 U	27	70 U	0.5 U		
Deep	DW-28DD	6/9/2011	GW	1.2	7	0.8 U	70	1 U	17	4 J	1 U	0.8 U	9	70 U	0.5 U		
Deep	DW-28DD	9/13/2011	GW	0.2 U	3 J	0.8 U	64	1 U	11	4 J	1 U	0.8 U	5		0.5 U		
Deep	DW-28DD	12/14/2011	GW	0.27 J	2 J	0.8 U	69	1 U	10	4 J	1 U	0.8 U	7		0.5 U		
Deep	DW-28DD	5/10/2012	GW	0.2 U	1 J	0.8 U	67	1 U	5	2 J	1 U	0.8 U	3 J		0.5 U		
Deep	DW-28DD	5/28/2013	GW	1 U	0.8 U	0.8 U	64	1 U	4 J	1 J	1 J	0.8 U	2 J		0.5 U		
Deep	DW-28DD	5/28/2013	GW	1 U	0.8 U	0.8 U	61	1 U	4 J	1 J	1 J	0.8 U	2 J		0.5 U		
Deep	DW-28DD	11/19/2013	GW	0.2 U	0.9 J	0.8 U	13	1 U	0.9 J	1 J	1 J	0.8 U	9	70 U	0.5 U		
Deep	DW-28DD	5/14/2014	GW	1 U	0.5 U	0.5 U	13	0.5 U	0.9 J	0.5 U	1	0.5 U	6		0.5 U		
Deep	DW-28DD	11/12/2014	GW	1 U	0.6 J	0.5 U	13	0.5 U	2 j	0.5 U	1	0.5 U	3		0.5 U		
Deep	DW-28DD	11/12/2014	GW	1 U	0.5 J	0.5 U	13	0.5 U	1 j	0.5 U	1	0.5 U	3		0.5 U		
Deep	DW-30I	11/9/2004	GW	72.1	54	1 J	68	1 U	300	6	1 J	0.8 U	1 U		0.5 U	Abandon: exceeds SLs for 11DCE, VC, and 1,4-dioxane, with stable to decreasing trends; redundant with downgradient detections and monitoring at DW-23 (195 ft) which has similar COC profile	140
Deep	DW-30I	2/17/2005	GW	2.8 J	66	1 J	100	2 J	340	8	1 J	0.8 U	1 J		0.5 J		
Deep	DW-30I	5/11/2005	GW	0.7 U	14	1 J	94	3 J	340	3 J	2 J	1 J	3 J		2 J		
Deep	DW-30I	5/8/2006	GW	0.21 J	2 J	0.8 U	8	1 U	43	0.8 U	1 U	0.8 U	1 U		0.5 U		
Deep	DW-30I	5/22/2008	GW		100 UJ	100 UJ	72 J	100 UJ	330 J	100 UJ	100 UJ	100 UJ	100 UJ		100 UJ		
Deep	DW-30I	10/16/2009	GW	7.9	4 J	1 J	56	2 J	260	1 J	2 J	0.8 U	37	70 U	3 J		
Deep	DW-30I	10/16/2009	GW	8	5 J	1 J	58	2 J	260	1 J	2 J	0.8 U	37	70 U	3 J		
Deep	DW-30I	3/30/2010	GW	11	5 J	1 J	58	1 U	250	2 J	2 J	0.8 U	38	70 U	2 J		
Deep	DW-30I	9/1/2011	GW		2 J	0.8 U	37	1 J	190	0.8 U	1 U	0.8 U	24		1 J		
Deep	DW-30I	5/1/2012	GW		1 J	0.8 U	34	1 J	170	0.8 U	1 J	0.8 U	20		1 J		
Deep	DW-30I	5/29/2013	GW	2.6	1 J	0.8 U	36	1 U	160	0.8 U	1 U	0.8 U	23	24 j	1 J		
Deep	DW-30I	5/13/2014	GW		0.6 J	0.5 U	30	0.5 U	100	0.6 J	0.7 J	0.5 U	20	18 j	0.8 J		
Deep	DW-30I	5/15/2015	GW	0.34 J	0.5 U	0.5 U	1	0.5 U	7	0.5 U	0.5 U	0.5 U	0.5 U	0.57	0.5 U		
Deep	DW-30I	4/1/2016	GW	2	0.5 U	0.5 U	22	0.5 U	92	0.5 U	0.6 J	0.5 U	13	17	0.6 J		
Deep	DW-30I	4/19/2017	GW	1.3	0.5 U	0.5 U	25	0.5 U	77	0.5 U	0.6 J	0.5 U	15	12	0.5 J		
Deep	DW-30D	11/9/2004	GW	180	55	2 J	80	2 J	410	6	2 J	0.8 U	1 U		0.5 U	Abandon: exceeded SLs for perchlorate, 11DCE, and 1,4-dioxane in 2013 when last sampled; redundant with downgradient detections and monitoring at DW-23 (195 ft) which has similar COC profile	235
Deep	DW-30D	2/17/2005	GW	118	44	2 J	56	2 J	340	2 J	1 J	0.8 U	1 U		0.5 U		
Deep	DW-30D	5/11/2005	GW	115	35	1 J	55	2 J	340	2 J	1 J	0.8 U	1 U		0.5 U		
Deep	DW-30D	5/8/2006	GW	43	34	3 J	85	3 J	510	1 J	2 J	0.8 U	2 J		2 J		
Deep	DW-30D	6/3/2008	GW		6.4 J	5 UJ	25 J	5 UJ	220 J	5 UJ	5 UJ	5 UJ	2 J		5 UJ		
Deep	DW-30D	10/19/2009	GW	22	4 J	0.8 U	20	1 U	170	0.8 U	1 U	0.8 U	1 J	70 U	0.5 U		
Deep	DW-30D	3/30/2010	GW	22	4 J	0.8 U	19	1 U	160	0.8 U	1 U	0.8 U	1 J	70 U	0.5 U		
Deep	DW-30D	9/2/2011	GW	23	2 J	0.8 U	14	1 U	120	0.8 U	1 U	0.8 U	1 U		0.5 U		
Deep	DW-30D	5/24/2013	GW	18	1 J	0.8 U	13	1 U	84	0.8 U	1 U	0.8 U	1 U	11	0.5 U		
Deep	DW-35 Zone 1	9/24/2009	GW	0.2 U	8	0.8 U	26	1 U	68	0.8 U	1 U	0.8 U	1 U	70 U	0.5 U	Abandon: redundant with downgradient monitoring within DW-13 capture zone with remaining wells; requires non-routine sampling; no longer sampled (last sampled in 2012); near injection well IW-8	58
Deep	DW-35 Zone 1	10/27/2009	GW	0.2 U	9	0.8 U	34	1 U	92	0.8 U	1 U	0.8 U	1 J	70 U	0.5 U		
Deep	DW-35 Zone 1	12/3/2009	GW	0.2 U	4 J	0.8 U	40	1 U	95	0.8 U	1 U	0.8 U	3 J	70 U	0.5 U		
Deep	DW-35 Zone 2	9/24/2009	GW	0.2 U	9	0.8 U	25	1 U	72	0.8 U	1 U	0.8 U	1 U	70 U	0.5 U		84
Deep	DW-35 Zone 2	10/27/2009	GW	2 U	22	0.8 U	53	1 U	180	0.8 U	1 U	0.8 U	2 J	70 U	0.5 U		
Deep	DW-35 Zone 2	12/3/2009	GW	0.2 U	7	0.8 U	57	1 U	150	0.8 U	1 U	0.8 U	4 J	70 U	0.5 U		
Deep	DW-35 Zone 3	9/24/2009	GW	2 U	44	0.8 U	22	1 U	140	0.8 U	1 U	0.8 U	1 U	70 U	0.5 U		119
Deep	DW-35 Zone 3	10/27/2009	GW	2 U	22	0.8 U	59	1 U	180	0.8 U	1 U	0.8 U	3 J	70 U	0.5 U		
Deep	DW-35 Zone 3	12/3/2009	GW	0.2 U	11	0.8 U	54	1 U	150	0.8 U	1 U	0.8 U	7	70 U	0.5 U		

Table 1 - Deep Groundwater Historical Results and Well Abandonment Rationale
Excluding Wells in Project Cub Area

Aquifer	Location	Date Sampled	Matrix	Perchlorate µg/L	111TCA µg/L	112TCA µg/L	11DCA µg/L	12DCA µg/L	11DCE µg/L	PCE µg/L	TCE µg/L	cis-12DCE µg/L	VC µg/L	14Dioxane µg/L	Benzene µg/L	Rationale*	Sample Depth
Screening Levels (SLs):				15	200	5	140	5	7	5	5	70	2	7.8	5		(ft)
Deep	DW-35 Zone 4	9/24/2009	GW	0.2 U	41	0.8 U	27	1 U	160	0.8 U	1 U	0.8 U	2 J	70 U	0.5 U	Abandon: redundant with downgradient monitoring within DW-13 capture zone with remaining wells; requires non-routine sampling; no longer sampled (last sampled in 2012); near injection well IW-8; redundant with nearby monitoring at DW-28, DW-29 and DW-36 (cont.)	
Deep	DW-35 Zone 4	10/27/2009	GW	2 U	11	0.8 U	60	1 U	160	0.8 U	1 U	0.8 U	4 J	70 U	0.5 U		
Deep	DW-35 Zone 4	12/3/2009	GW	1 U	38	0.8 U	33	1 U	160	0.8 U	1 U	0.8 U	2 J	70 U	0.5 U		
Deep	DW-35 Zone 4	2/2/2010	GW	0.2 U	41	0.8 U	31	1 U	140	0.8 U	1 U	0.8 U	4 J	70 U	0.5 U		
Deep	DW-35 Zone 4	3/2/2010	GW	2 U	30	0.8 U	40	1 U	150	0.8 U	1 U	0.8 U	7	70 U	0.5 U		
Deep	DW-35 Zone 4	4/8/2010	GW	0.22 J	28	0.8 U	36	1 U	120	0.8 U	1 U	0.8 U	9	70 U	0.5 U		154
Deep	DW-35 Zone 4	6/16/2010	GW	2 U	17	0.8 U	39	1 U	72	0.8 U	1 U	0.8 U	23	70 U	0.5 U		
Deep	DW-35 Zone 4	8/10/2010	GW	2 U	13	0.8 U	55	1 U	16	0.8 U	1 U	0.8 U	28	70 U	0.5 U		
Deep	DW-35 Zone 4	10/5/2010	GW	0.2 U	11	0.8 U	61	1 U	10	0.8 U	1 U	0.8 U	16	70 U	0.5 U		
Deep	DW-35 Zone 4	12/3/2010	GW	2 U	9	0.8 U	64	1 U	11	0.8 U	1 U	0.8 U	16	70 U	0.5 U		
Deep	DW-35 Zone 4	2/2/2011	GW	2 U	4 J	0.8 U	62	1 U	7	0.8 U	1 U	0.8 U	9	70 U	0.5 U		
Deep	DW-35 Zone 5	9/24/2009	GW	16	62	0.8 U	19	1 U	190	0.8 U	1 U	0.8 U	1 U	70 U	0.5 U		
Deep	DW-35 Zone 5	10/27/2009	GW	0.2 U	48	0.8 U	39	1 U	180	0.8 U	1 U	0.8 U	1 J	70 U	0.5 U		
Deep	DW-35 Zone 5	12/3/2009	GW	1 U	17	0.8 U	48	1 U	140	0.8 U	1 U	0.8 U	2 J	70 U	0.5 U		
Deep	DW-35 Zone 5	2/2/2010	GW	2 U	19	0.8 U	46	1 U	130	0.8 U	1 U	0.8 U	3 J	70 U	0.5 U		
Deep	DW-35 Zone 5	3/2/2010	GW	2 U	10	0.8 U	59	1 U	150	0.8 U	1 U	0.8 U	9	70 U	0.5 U		
Deep	DW-35 Zone 5	4/8/2010	GW	2 U	29	0.8 U	45	1 U	150	0.8 U	1 U	0.8 U	5 J	70 U	0.5 U		
Deep	DW-35 Zone 5	6/16/2010	GW	0.2 J	4 J	0.8 U	66	1 U	23	0.8 U	1 U	0.8 U	29	70 U	0.5 U		
Deep	DW-35 Zone 5	8/10/2010	GW	2 U	2 J	0.8 U	66	1 U	5	0.8 U	1 U	0.8 U	14	70 U	0.5 U		182
Deep	DW-35 Zone 5	10/5/2010	GW	0.2 U	0.8 U	0.8 U	69	1 U	3 J	0.8 U	1 U	0.8 U	8	70 U	0.5 U		
Deep	DW-35 Zone 5	12/3/2010	GW	0.2 U	1 J	0.8 U	65	1 U	4 J	0.8 U	1 U	0.8 U	11	70 U	0.5 U		
Deep	DW-35 Zone 5	2/2/2011	GW	2 U	0.8 U	0.8 U	65	1 U	0.8 U	0.8 U	1 U	0.8 U	3 J	70 U	0.5 U		
Deep	DW-35 Zone 5	5/6/2011	GW	0.2 U	0.8 U	0.8 U	67	1 U	0.8 U	0.8 U	1 U	0.8 U	2 J	70 U	0.5 U		
Deep	DW-35 Zone 5	9/7/2011	GW	0.22 J	0.8 U	0.8 U	89	1 U	0.8 U	0.8 U	1 U	0.8 U	2 J		0.5 U		
Deep	DW-35 Zone 5	12/13/2011	GW	0.22 U	0.8 U	0.8 U	70	1 U	0.8 U	0.8 U	1 U	0.8 U	2 J	70 U	0.5 U		
Deep	DW-35 Zone 5	5/8/2012	GW	0.3 J	0.8 U	0.8 U	100	1 U	0.8 U	0.8 U	1 U	0.8 U	5		0.5 U		
Deep	DW-35 Zone 6	9/24/2009	GW	2 U	45	0.8 U	26	1 U	180	0.8 U	1 U	0.8 U	1 U	70 U	0.5 U		
Deep	DW-35 Zone 6	10/27/2009	GW	0.2 U	33	0.8 U	56	1 U	240	0.8 U	1 U	0.8 U	2 J	70 U	0.5 U		203
Deep	DW-35 Zone 6	12/3/2009	GW	1 U	26	0.8 U	45	1 U	170	0.8 U	1 U	0.8 U	1 J	70 U	0.5 U		
Deep	DW-35 Zone 7	9/24/2009	GW	0.2 U	33	0.8 U	32	1 U	180	0.8 U	1 U	0.8 U	1 U	70 U	0.5 U		
Deep	DW-35 Zone 7	10/27/2009	GW	0.2 U	48	0.8 U	36	1 U	180	0.8 U	1 U	0.8 U	1 J	70 U	0.5 U		216
Deep	DW-35 Zone 7	12/3/2009	GW	1 U	43	0.8 U	40	1 U	190	0.8 U	1 U	0.8 U	1 U	70 U	0.5 U		
Deep	DW-35 Zone 8	9/25/2009	GW	850	73	0.8 U	28	1 U	270	0.8 U	1 U	0.8 U	2 J	70 U	0.5 U		
Deep	DW-35 Zone 8	10/28/2009	GW	1500	58	0.8 U	25	1 U	180	0.8 U	1 U	0.8 U	1 J	70 U	0.5 U		
Deep	DW-35 Zone 8	12/3/2009	GW	1100	67	0.8 U	33	1 U	230	0.8 U	1 U	0.8 U	2 J	70 U	0.5 U		
Deep	DW-35 Zone 8	2/2/2010	GW	840	48	0.8 U	25	1 U	140	0.8 U	1 U	0.8 U	2 J	70 U	0.5 U		
Deep	DW-35 Zone 8	3/2/2010	GW	2200	52	0.8 U	32	1 U	180	0.8 U	1 U	0.8 U	2 J	70 U	0.5 U		
Deep	DW-35 Zone 8	4/8/2010	GW	560	65	0.8 U	38	1 U	230	0.8 U	1 U	0.8 U	5 J	70 U	0.5 U		
Deep	DW-35 Zone 8	6/16/2010	GW	560	57	0.8 U	41	1 U	210	0.8 U	1 U	0.8 U	13	70 U	0.5 U		
Deep	DW-35 Zone 8	8/10/2010	GW	530	68	0.8 U	40	1 U	230	0.8 U	1 U	0.8 U	8	70 U	0.5 U		
Deep	DW-35 Zone 8	10/5/2010	GW	290	83	0.8 U	43	1 U	220	0.8 U	1 U	0.8 U	11	70 U	0.5 U		
Deep	DW-35 Zone 8	12/3/2010	GW	1000	50	0.8 U	38	1 U	160	0.8 U	1 U	0.8 U	8	70 U	0.5 U		
Deep	DW-35 Zone 8	2/2/2011	GW	1000	64	0.8 U	39	1 U	170	0.8 U	1 U	0.8 U	7	70 U	0.5 U		
Deep	DW-35 Zone 8	5/6/2011	GW	1100	62	0.8 U	43	1 U	190	0.8 U	1 U	0.8 U	7	70 U	0.5 U		
Deep	DW-35 Zone 8	9/7/2011	GW	840	39	0.8 U	36	1 U	100	0.8 U	1 U	0.8 U	4 J		0.5 U		
Deep	DW-35 Zone 8	12/13/2011	GW	0.57 J	0.8 U	0.8 U	85	1 U	5 J	0.8 U	1 U	0.8 U	11	70 U	0.5 U		
Deep	DW-35 Zone 8	5/8/2012	GW	900	58	0.8 U	52	1 U	150	0.8 U	1 U	0.8 U	5 J		0.5 U		240

Table 1 - Deep Groundwater Historical Results and Well Abandonment Rationale
Excluding Wells in Project Cub Area

Aquifer	Location	Date Sampled	Matrix	Perchlorate µg/L	111TCA µg/L	112TCA µg/L	11DCA µg/L	12DCA µg/L	11DCE µg/L	PCE µg/L	TCE µg/L	cis-12DCE µg/L	VC µg/L	14Dioxane µg/L	Benzene µg/L	Rationale*	Sample Depth
Screening Levels (SLs):				15	200	5	140	5	7	5	5	70	2	7.8	5		(ft)
Deep	DW-36DD	9/28/2009	GW	0.2 U	45	0.8 U	44	1 U	270	0.8 U	1 U	0.8 U	2 J	70 U	0.5 U		
Deep	DW-36DD	10/27/2009	GW	0.2 U	34	0.8 U	48	1 U	230	0.8 U	1 U	0.8 U	2 J	70 U	0.5 U		
Deep	DW-36DD	10/27/2009	GW	0.2 U	33	0.8 U	48	1 U	230	0.8 U	1 U	0.8 U	2 J	70 U	0.5 U		
Deep	DW-36DD	11/23/2009	GW	0.2 U	36	0.8 U	53	1 U	270	0.8 U	1 U	0.8 U	3 J	70 U	0.5 U		
Deep	DW-36DD	1/5/2010	GW	0.2 U	33	0.8 U	49	1 U	240	0.8 U	1 U	0.8 U	3 J	70 U	0.5 U		
Deep	DW-36DD	2/3/2010	GW	2 U	36	0.8 U	52	1 U	240	0.8 U	1 U	0.8 U	3 J	70 U	0.5 U		
Deep	DW-36DD	3/3/2010	GW	2 U	12	0.8 U	57	1 U	220	0.8 U	1 U	0.8 U	5	70 U	0.5 U		
Deep	DW-36DD	4/7/2010	GW	2 U	26	0.8 U	54	1 U	230	0.8 U	1 U	0.8 U	11	70 U	0.5 U		
Deep	DW-36DD	6/16/2010	GW	0.2 U	24	0.8 U	59	1 U	110	0.8 U	1 U	0.8 U	60	70 U	0.5 U		
Deep	DW-36DD	6/16/2010	GW	0.2 U	24	0.8 U	62	1 U	110	0.8 U	1 U	0.8 U	64	70 U	0.5 U		
Deep	DW-36DD	8/10/2010	GW	2 U	51	0.8 U	49	1 U	180	0.8 U	1 U	0.8 U	28	70 U	0.5 U	Abandon: exceeds SLs for 11DCE and VC with stable to decreasing trends; within DW-13 capture zone; redundant with DW-36D (219 ft) which has similar COCs	253
Deep	DW-36DD	10/6/2010	GW	0.2 U	65	0.8 U	57	1 U	170	0.8 U	1 U	0.8 U	39	70 U	0.5 U		
Deep	DW-36DD	12/7/2010	GW	2 U	42	0.8 U	57	1 U	120	0.8 U	1 U	0.8 U	39	70 U	0.5 U		
Deep	DW-36DD	2/3/2011	GW	2 U	40	0.8 U	61	1 U	110	0.8 U	1 U	0.8 U	34	70 U	0.5 U		
Deep	DW-36DD	6/8/2011	GW	30	34	0.8 U	67	1 U	100	0.8 U	1 U	0.8 U	30	70 U	0.5 U		
Deep	DW-36DD	9/14/2011	GW	31	20	0.8 U	57	1 U	59	0.8 U	1 U	0.8 U	19		0.5 U		
Deep	DW-36DD	12/13/2011	GW	310 J	32	0.8 U	69	1 U	93	0.8 U	1 U	0.8 U	12		0.5 U		
Deep	DW-36DD	12/13/2011	GW	150 J	32	0.8 U	67	1 U	92	0.8 U	1 U	0.8 U	11		0.5 U		
Deep	DW-36DD	2/27/2012	GW	39	53	0.8 U	53	1 U	140	0.8 U	1 U	0.8 U	15	70 U	0.5 U		
Deep	DW-36DD	5/9/2012	GW	48	45	0.8 U	54	1 U	150	0.8 U	1 U	0.8 U	10		0.5 U		
Deep	DW-36DD	8/16/2012	GW	0.98 J	27	0.8 U	65	1 U	99	0.8 U	1 U	0.8 U	14		0.5 U		
Deep	DW-36DD	11/6/2012	GW	0.2 U	0.8 U	0.8 U	68	1 U	0.8 U	0.8 U	1 U	0.8 U	1 U		0.5 U		
Deep	DW-36DD	5/28/2013	GW	1 U	4 J	0.8 U	89	1 U	40	1 J	1 U	0.8 U	24		0.5 U		
Deep	DW-36DD	11/19/2013	GW	0.2 U	0.8 U	0.8 U	5 J	1 U	0.8 U	0.8 U	1 U	0.8 U	1 U	70 U	0.5 U		
Deep	DW-36DD	5/13/2014	GW	1 U	0.5 U	0.5 U	26	0.5 U	0.5 U	0.5 U	0.5 U	0.5 U	2		0.5 U		
Deep	DW-36DD	11/11/2014	GW	1 U	0.5 U	0.5 U	39	0.5 U	15	0.5 U	0.5 J	0.5 U	17		0.5 U		
Deep	DW-72A	5/20/2003	GW	805	46.5	1 U	6.4	1 U	196	12.8	1 U	1 U	1 U			Abandon: exceeded SLs for perchlorate, PCE, and 11DCE, 11DCE has decreasing trend; last sampled in 2014; within DW-13 capture zone and with similar COCS as DW-13; redundant with nearby monitoring at DW-23 (195 ft) with similar depth and COCs	171
Deep	DW-72A	4/5/2004	GW	1050	89	0.8 U	13	1 U	330	13	1 U	0.8 U	1 U		0.5 U		
Deep	DW-72A	4/20/2004	GW											5			
Deep	DW-72A	8/19/2004	GW	1420	82	0.8 U	11	1 U	350	29	1 U	0.8 U	1 U		0.5 U		
Deep	DW-72A	11/10/2004	GW	136	50	0.8 U	7	1 U	280	36	1 U	0.8 U	1 U		0.5 U		
Deep	DW-72A	2/16/2005	GW	58.3	61	0.8 U	8	1 U	260	20	1 U	0.8 U	1 U		0.5 U		
Deep	DW-72A	5/10/2005	GW	38.8	40	0.8 U	6	1 U	280	7	1 U	0.8 U	1 U		0.5 U		
Deep	DW-72A	2/15/2006	GW	34	36	0.8 U	7	1 U	260	4 J	2 J	0.8 U	1 U		0.5 U		
Deep	DW-72A	5/16/2006	GW	91	31	0.8 U	7	1 U	230	4 J	1 U	0.8 U	1 U		0.5 U		
Deep	DW-72A	8/16/2006	GW	130	24	0.8 U	7	1 U	210	3 J	1 U	0.8 U	1 U		0.5 U		
Deep	DW-72A	11/16/2006	GW	29	1 J	0.8 U	1 U	1 U	3 J	0.8 U	1 U	0.8 U	1 U		0.5 U		
Deep	DW-72A	2/20/2007	GW	170	21	0.8 U	6	1 U	190	3 J	1 U	0.8 U	1 U		0.5 U		
Deep	DW-72A	5/19/2008	GW		100 UJ	100 UJ	100 UJ	100 UJ	100 J	100 UJ	100 UJ	100 UJ	100 UJ		100 UJ		
Deep	DW-72A	10/21/2009	GW	46	7	0.8 U	5	1 U	150	6	1 J	0.8 U	1 U	70 U	0.5 U		
Deep	DW-72A	3/18/2010	GW	160	6	0.8 U	4 J	1 U	130	8	1 U	0.8 U	1 U	70 U	0.5 U		
Deep	DW-72A	9/1/2011	GW	190	3 J	0.8 U	4 J	1 U	71	24	1 U	0.8 U	1 U		0.5 U		
Deep	DW-72A	5/3/2012	GW	52	3 J	0.8 U	7	1 U	79	44	1 U	0.8 U	2 J		0.5 U		
Deep	DW-72A	5/24/2013	GW	21	3 J	0.8 U	10	1 U	66	45	1 U	0.8 U	2 J		0.5 U		
Deep	DW-72A	5/14/2014	GW	32	0.6 J	0.5 U	2	0.5 U	25	10	0.5 U	0.5 U	0.8 J		0.5 U		

Table 1 - Deep Groundwater Historical Results and Well Abandonment Rationale
Excluding Wells in Project Cub Area

Aquifer	Location	Date Sampled	Matrix	Perchlorate µg/L	111TCA µg/L	112TCA µg/L	11DCA µg/L	12DCA µg/L	11DCE µg/L	PCE µg/L	TCE µg/L	cis-12DCE µg/L	VC µg/L	14Dioxane µg/L	Benzene µg/L	Rationale*	Sample Depth
Screening Levels (SLs):				**15**	**200**	**5**	**140**	**5**	**7**	**5**	**5**	**70**	**2**	**7.8**	**5**		(ft)
Deep	IW-3	4/9/2004	GW	357	0.8 U	0.8 U	1 U	1 U	0.8 U	0.8 U	1 U	0.8 U	1 U		0.5 U	Abandon: exceeded SLs for 11DCE and VC in 2013; redundant with nearby DW-16 (240 ft) and DW-20 (270 ft) based on similar COC profile; last sampled 2013	170
Deep	IW-3	10/21/2009	GW	0.2 U	0.8 U	0.8 U	1 J	1 U	5 J	0.8 U	1 U	0.8 U	1 U	70 U	0.5 U		
Deep	IW-3	10/21/2009	GW	0.2 U	0.8 U	0.8 U	1 J	1 U	5 J	0.8 U	1 U	0.8 U	1 U	70 U	0.5 U		
Deep	IW-3	3/18/2010	GW	0.2 U	0.8 U	0.8 U	1 J	1 U	5 J	0.8 U	1 U	0.8 U	1 U	70 U	0.5 U		
Deep	IW-3	8/30/2011	GW	0.2 U													
Deep	IW-3	5/23/2013	GW	1 U	0.8 U	0.8 U	25	1 U	10	0.8 U	1 U	0.8 U	11		0.5 U		
Deep	DW-8	3/24/1987	GW		U		U		U	U					U	Abandon: ND in 1987	
Deep	DW-9	3/25/1987	GW		U		U		U	U					U	Abandon: ND in 1987 and 1988	
Deep	DW-9	9/8/1988	GW		U		U		U	U	U	U			U		

Notes: All well were evaluated for potential abandonment with respect to the objectives of the approved 2015 Sampling and Analysis Plan, water level needs, if any, the general presence of stable to decreasing concentrations trends across the Site, geographic position, plume position, planned restriction against the use of ground water, planned requirement for vapor barriers as part of redevelopment, USEPA's Vapor Intrusion Screening Level calculator, and redundancy (evaluated by COCs, sample depth, and groundwater flow considerations) in meeting objectives. The evaluation of all wells utilized the most recent sampling data for each well, which is from 2017 for source, performance, and sentinel wells and from the years indicated in the "rationale summary" column for "water level" only wells under the 2015 SAP.

* The rationale for well abandonment may include reference to other wells with an indication of sampling depth in those other wells provided in parentheses.

111TCA = 1,1,1-trichlorethane
112TCA = 1,1,2-trichlorethane
11DCA = 1,1-dichlorethane
12DCA = 1,2-dichlorethane
11DCE = 1,1-dichlorethene
PCE = tetrachloroethene
TCE = trichloroethene
cis-12DCE = cis1,2-dichloroethene
VC = vinyl chloride

Table 2 - Deep and Shallow Groundwater Historical Results and Well Abandonment Rationale
Project Cub Area

Aquifer	Location	Date Sampled	Matrix	Perchlorate µg/L	111TCA µg/L	112TCA µg/L	11DCA µg/L	12DCA µg/L	11DCE µg/L	PCE µg/L	TCE µg/L	cis-12DCE µg/L	VC µg/L	14Dioxane µg/L	Benzene µg/L	Rationale*	Sample Depth
Screening Levels (SLs):				15	200	5	140	5	7	5	5	70	2	7.8	5		(ft)
Shallow	SW 200-02	11/5/2002	GW		1 U	1 U	1 U	1 U	1 U	1 U	1 U	1 U	1 U			Retain and Sample - Sentinel Well	10
Shallow	SW 200-02	5/23/2003	GW	4 U	1 U	1 U	1 U	1 U	1.1	1 U	1.1	1 U	1 U				
Shallow	SW 200-02	5/31/2008	GW	1 U	1.5 J	5 UJ	2 J	5 UJ	3.6 J	5 UJ	5 UJ	5 UJ	5 UJ		5 UJ		
Shallow	SW 200-02	7/30/2009	GW	0.2 U	0.8 J	0.8 U	1 J	1 U	2 J	0.8 U	1 U	0.8 U	1 U	70 U	0.5 U		
Shallow	SW 200-02	3/16/2010	GW	0.2 U	1 J	0.8 U	1 J	1 U	2 J	0.8 U	1 U	0.8 U	1 U	70 U	0.5 U		
Shallow	SW 200-02	9/1/2011	GW	0.2 U	1 J	0.8 U	1 J	1 U	2 J	0.8 U	1 U	0.8 U	1 U	0.53 J	0.5 U		
Shallow	SW 200-02	5/2/2012	GW	0.25 J	3 J	0.8 U	2 J	1 U	3 J	0.8 U	1 U	0.8 U	1 U		0.5 U		
Shallow	SW 200-02	5/22/2013	GW	1 U	3 Jj	0.8 U	2 Jj	1 U	3 Jj	0.8 U	1 U	0.8 U	1 U	0.73 j	0.5 U		
Shallow	SW 200-02	5/22/2013	GW	1 U	2 J	0.8 U	2 J	1 U	2 J	0.8 U	1 U	0.8 U	1 U	0.75	0.5 U		
Shallow	SW 200-02	11/19/2013	GW	0.2 U	2 J	0.8 U	2 J	1 U	3 J	0.8 U	1 U	0.8 U	1 U	70 U	0.5 U		
Shallow	SW 200-02	11/19/2013	GW	0.2 U	2 J	0.8 U	2 J	1 U	3 J	0.8 U	1 U	0.8 U	1 U	70 U	0.5 U		
Shallow	SW 200-02	5/13/2014	GW	1 U	2	0.5 U	1	0.5 U	2	0.5 U	0.5 U	0.5 U	0.5 U	0.36	0.5 U		
Shallow	SW 200-02	5/13/2014	GW	1 U	2	0.5 U	1	0.5 U	2	0.5 U	0.5 J	0.5 U	0.5 U	0.35	0.5 U		
Shallow	SW 200-02	5/12/2015	GW	0.2 U	2	0.5 U	1	0.5 U	2	0.5 U	0.5 U	0.5 U	0.5 U		0.5 U		
Shallow	SW 200-02	5/12/2015	GW	0.2 U	2	0.5 U	1	0.5 U	2	0.5 U	0.5 U	0.5 U	0.5 U		0.5 U		
Shallow	SW 200-02	11/5/2015	GW	0.2 U	2	0.5 U	2	0.5 U	3	0.5 U	0.8 J	0.5 U	0.5 U		0.5 U		
Shallow	SW 200-02	3/29/2016	GW	0.2 U	2	0.5 U	1	0.5 U	2	0.5 U	0.5 U	0.5 U	0.5 U		0.5 U		
Shallow	SW 200-02	3/29/2016	GW	0.26 J	2	0.5 U	1	0.5 U	2	0.5 U	0.5 U	0.5 U	0.5 U		0.5 U		
Shallow	SW 200-02	10/26/2016	GW	0.2 U	2	0.5 U	1	0.5 U	2	0.5 U	0.6 J	0.5 U	0.5 U		0.5 U		
Shallow	SW 200-02	4/17/2017	GW	0.22 U	2	0.5 U	2	0.5 U	3	0.5 U	1	0.5 U	0.5 U		0.5 U		
Shallow	SW 200-02	4/17/2017	GW	0.2 U	2	0.5 U	2	0.5 U	3	0.5 U	1	0.5 U	0.5 U		0.5 U		
Shallow	SW 212-01	4/3/2003	GW		5 U	5 U	5 U	5 U	5 U	5 U	5 U	5 U	5 U		5 U	Retain and Sample - Sentinel Well	9
Shallow	SW 212-01	5/23/2003	GW	4 U	1 U	1 U	1 U	1 U	1 U	1 U	1 U	1 U	1 U				
Shallow	SW 212-01	3/19/2010	GW	2.9	0.8 U	0.8 U	1 U	1 U	0.8 U	0.8 U	1 U	0.8 U	1 U	70 U	0.5 U		
Shallow	SW 212-01	9/13/2011	GW	1.3	4 J	0.8 U	3 J	1 U	0.8 U	0.8 U	1 U	0.8 U	1 U	0.056 UJ	0.5 U		
Shallow	SW 212-01	5/3/2012	GW	0.24 J	0.8 U	0.8 U	1 U	1 U	0.8 U	0.8 U	1 U	0.8 U	1 U		0.5 U		
Shallow	SW 212-01	5/23/2013	GW	1	0.8 U	0.8 U	1 U	1 U	0.8 U	0.8 U	1 U	0.8 U	1 U		0.5 U		
Shallow	SW 212-01	5/13/2014	GW	1 U	0.5 U	0.5 U	0.5 U	0.5 U	0.5 U	0.5 U	0.5 U	0.5 U	0.5 U		0.5 U		
Shallow	SW 212-01	5/12/2015	GW	0.64 J	0.5 U	0.5 U	0.5 U	0.5 U	0.5 U	0.5 U	0.5 U	0.5 U	0.5 U		0.5 U		
Shallow	SW 212-01	11/5/2015	GW	0.2 U	0.5 U	0.5 U	0.5 U	0.5 U	0.5 U	0.5 U	0.5 U	0.5 U	0.5 U		0.5 U		
Shallow	SW 212-01	3/30/2016	GW	0.2 U	0.5 U	0.5 U	0.5 U	0.5 U	0.5 U	0.5 U	0.5 U	0.5 U	0.5 U		0.5 U		
Shallow	SW 212-01	4/18/2017	GW	0.4 J	0.5 U	0.5 U	0.5 U	0.5 U	0.5 U	0.5 U	0.5 U	0.5 U	0.5 U		0.5 U		
Shallow	BW 86-01	8/12/2008	GW	0.2 U	0.8 U	0.8 U	2 J	1 U	4 J	0.8 U	1 U	0.8 U	1 U	70 U	0.5 U	Abandon: below SLs for 3 years (2008-2010)	35
Shallow	BW 86-01	7/30/2009	GW	0.73 J	0.8 U	0.8 U	2 J	1 U	2 J	0.8 U	1 U	0.8 U	1 U	70 U	0.5 U		
Shallow	BW 86-01	7/30/2009	GW	0.93 J	0.8 U	0.8 U	2 J	1 U	2 J	0.8 U	1 U	0.8 U	1 U	70 U	0.5 U		
Shallow	BW 86-01	3/22/2010	GW	0.2 U	0.8 U	0.8 U	2 J	1 U	2 J	0.8 U	1 U	0.8 U	1 U	70 U	0.5 U		
Shallow	BW 93-01	8/13/2008	GW	16	0.8 U	0.8 U	1 U	1 U	0.8 U	0.8 U	1 U	0.8 U	1 U	70 U	0.5 U	Abandon: below SLs for 3 years (2008-2011)	34
Shallow	BW 93-01	8/5/2009	GW	13	0.8 U	0.8 U	1 U	1 U	0.8 U	0.8 U	1 U	0.8 U	1 U	70 U	0.5 U		
Shallow	BW 93-01	3/22/2010	GW	12	0.8 U	0.8 U	1 U	1 U	0.8 U	0.8 U	1 U	0.8 U	1 U	70 U	0.5 U		
Shallow	BW 93-01	8/30/2011	GW	11													
Shallow	BW 200-01	6/25/2008	GW	1 U	1 J	0.8 U	29	1 U	30	0.8 U	26	3 J	1 U	70 U	0.5 U	Abandon: below SLs for >3 years	36
Shallow	BW 200-01	7/29/2009	GW	0.2 U	0.8 U	0.8 U	6	1 U	6	0.8 U	1 J	0.8 U	1 U	70 U	0.5 U		
Shallow	BW 200-01	3/24/2010	GW	0.2 U	0.8 U	0.8 U	5	1 U	4 J	0.8 U	1 U	0.8 U	1 U	70 U	0.5 U		
Shallow	BW 200-01	9/1/2011	GW		0.8 U	0.8 U	4 J	1 U	4 J	0.8 U	1 U	0.8 U	1 U		0.5 U		
Shallow	BW 200-01	5/13/2014	GW		0.5 U	0.5 U	5	0.5 U	4	0.5 U	0.8 J	0.5 U	0.5 U		0.5 U		

Table 2 - Deep and Shallow Groundwater Historical Results and Well Abandonment Rationale
Project Cub Area

Aquifer	Location	Date Sampled	Matrix	Perchlorate µg/L	111TCA µg/L	112TCA µg/L	11DCA µg/L	12DCA µg/L	11DCE µg/L	PCE µg/L	TCE µg/L	cis-12DCE µg/L	VC µg/L	14Dioxane µg/L	Benzene µg/L	Rationale*	Sample Depth
Screening Levels (SLs):				**15**	**200**	**5**	**140**	**5**	**7**	**5**	**5**	**70**	**2**	**7.8**	**5**		(ft)
Shallow	BW 217-01	8/13/2008	GW	3.1	0.8 U	0.8 U	1 U	1 U	0.8 U	0.8 U	1 U	0.8 U	1 U	70 U	0.5 U	Abandon: below SLs for 3 years (2008-2010)	38
Shallow	BW 217-01	7/29/2009	GW	2.5	0.8 U	0.8 U	1 U	1 U	0.8 U	0.8 U	1 U	0.8 U	1 U	70 U	0.5 U		
Shallow	BW 217-01	3/23/2010	GW	1.9	0.8 U	0.8 U	1 U	1 U	0.8 U	0.8 U	1 U	0.8 U	1 U	70 U	0.5 U		
Shallow	BW 237-01D	5/11/2006	GW	15	0.8 U	0.8 U	1 U	1 U	0.8 U	0.8 U	1 U	0.8 U	1 U		0.5 U	Abandon: below SLs for >3 years	25
Shallow	BW 237-01D	8/15/2006	GW	13	0.8 U	0.8 U	1 U	1 U	0.8 U	0.8 U	1 U	0.8 U	1 U		0.5 U		
Shallow	BW 237-01D	11/17/2006	GW	14	0.8 U	0.8 U	1 U	1 U	0.8 U	0.8 U	1 U	0.8 U	1 U		0.5 U		
Shallow	BW 237-01D	10/3/2007	GW	16	0.8 U	0.8 U	1 U	1 U	0.8 U	0.8 U	1 U	0.8 U	1 U		0.5 U		
Shallow	BW 237-01D	5/22/2008	GW	8.7 J	5 UJ	5 UJ	5 UJ	5 UJ	5 UJ	5 UJ	5 UJ	5 UJ	5 UJ		5 UJ		
Shallow	BW 237-01D	9/2/2011	GW	12													
Shallow	BW 237-01D	5/11/2012	GW	7.2													
Shallow	BW 237-01D	5/22/2013	GW	3.4 j	0.8 U	0.8 U	1 U	1 U	0.8 U	0.8 U	1 U	0.8 U	1 U		0.5 U		
Shallow	BW 237-01D	5/14/2014	GW	3.5													
Shallow	BW 237-01D	5/13/2015	GW	4.8	0.5 U	0.5 U	0.5 U	0.5 U	0.5 U	0.5 U	0.5 U	0.5 U	0.5 U		0.5 U		
Shallow	BW 237-01D	3/31/2016	GW	3.2	0.5 U	0.5 U	0.5 U	0.5 U	0.5 U	0.5 U	0.5 U	0.5 U	0.5 U		0.5 U		
Shallow	BW 237-01D	4/18/2017	GW	3	0.5 U	0.5 U	0.5 U	0.5 U	0.5 U	0.5 U	0.5 U	0.5 U	0.5 U		0.5 U		
Shallow	BW NE-01S	5/11/2006	GW	14	0.8 U	0.8 U	1 U	1 U	0.8 U	0.8 U	1 U	0.8 U	1 U		0.5 U	Abandon: below SLs for >3 years	7
Shallow	BW NE-01S	8/15/2006	GW	0.77 J	0.8 U	0.8 U	1 U	1 U	0.8 U	0.8 U	1 U	0.8 U	1 U		0.5 U		
Shallow	BW NE-01S	11/17/2006	GW	3.2													
Shallow	BW NE-01S	9/7/2011	GW	0.3 J	0.8 U	0.8 U	1 U	1 U	0.8 U	0.8 U	1 U	0.8 U	1 U		0.5 U		
Shallow	BW NE-01S	5/14/2014	GW	1 U	0.5 U	0.5 U	0.5 U	0.5 U	0.5 U	0.5 U	0.5 U	0.5 U	0.5 U		0.5 U		
Shallow	DW-31I	11/12/2004	GW	4.9	0.8 U	0.8 U	1 J	1 U	3 J	3 J	1 U	0.8 U	1 U		0.5 U	Abandon: below SLs for >3 years	153
Shallow	DW-31I	2/17/2005	GW	0.7 U	9	0.8 U	1 J	1 U	15	2 J	1 U	0.8 U	1 U		0.5 U		
Shallow	DW-31I	9/28/2007	GW	0.2 U	0.8 U	0.8 U	1 U	1 U	1 J	0.8 U	1 U	0.8 U	1 U		0.5 U		
Shallow	DW-31I	5/21/2008	GW	0.33 U	5 UJ	5 UJ	5 UJ	5 UJ	5 UJ	5 UJ	5 UJ	5 UJ	5 UJ		5 UJ		
Shallow	DW-31I	9/2/2011	GW		0.8 U	0.8 U	1 J	1 U	2 J	0.8 U	1 U	0.8 U	1 U		0.5 U		
Shallow	DW-31I	5/14/2014	GW		0.5 U	0.5 U	0.5 U	0.5 U	0.5 U	0.5 U	0.5 U	0.5 U	0.5 U		0.5 U		
Shallow	SW 204-01	11/5/2002	GW		1 U	1 U	1 U	1 U	1 U	1 U	1	1 U	1 U			Abandon: below SLs for >3 years	10
Shallow	SW 204-01	5/23/2003	GW	4 U	1	1 U	1 U	1 U	1 U	1 U	6.4	1 U	1 U				
Shallow	SW 204-01	5/13/2004	GW	2.4 J	1 J	0.8 U	1 U	1 U	0.8 U	0.8 U	3 J	0.8 U	1 U		0.5 U		
Shallow	SW 204-01	9/1/2011	GW		0.8 U	0.8 U	1 U	1 U	0.8 U	0.8 U	1 U	0.8 U	1 U		0.5 U		
Shallow	SW 204-01	5/8/2012	GW		0.8 U	0.8 U	1 U	1 U	0.8 U	0.8 U	1 U	0.8 U	1 U		0.5 U		
Shallow	SW 204-01	5/23/2013	GW	6.1	0.8 U	0.8 U	1 U	1 U	0.8 U	0.8 U	1 J	0.8 U	1 U		0.5 U		
Shallow	SW 204-01	5/13/2014	GW		0.5 U	0.5 U	0.5 U	0.5 U	0.5 U	0.5 U	1	0.5 U	0.5 U		0.5 U		
Shallow	BW 116-01	8/13/2008	GW	63	0.8 U	0.8 U	1 U	1 U	0.8 U	0.8 U	1 U	0.8 U	1 U	70 U	0.5 U	Abandon: exceeds for perchlorate only, with decreasing trend; redundant with downgradient monitoring	17
Shallow	BW 116-01	8/5/2009	GW	56 J	0.8 U	0.8 U	1 U	1 U	0.8 U	0.8 U	1 U	0.8 U	1 U	70 U	0.5 U		
Shallow	BW 116-01	3/23/2010	GW	33	0.8 U	0.8 U	1 U	1 U	0.8 U	0.8 U	1 U	0.8 U	1 U	70 U	0.5 U		
Shallow	BW 116-01	8/30/2011	GW	43													
Shallow	BW 116-01	5/23/2013	GW	16													
Shallow	BW 212-01	8/19/2008	GW	0.2 U	3 J	0.8 U	16	1 U	23	0.8 U	15	1 J	1 U	70 U	0.5 U	Abandon: below SLs for perchlorate beginning in 2008 and for VOCs in 2014; redundant with Sentinel Well SW 212-01	62
Shallow	BW 212-01	7/28/2009	GW	0.2 U	1 J	0.8 U	9	1 U	11	0.8 U	8	0.8 U	1 U	70 U	0.5 U		
Shallow	BW 212-01	3/22/2010	GW	0.2 U	1 J	0.8 U	13	1 U	17	0.8 U	11	1 J	1 U	70 U	0.5 U		
Shallow	BW 212-01	8/31/2011	GW		0.8 U	0.8 U	10	1 U	14	0.8 U	9	0.9 J	1 U		0.5 U		
Shallow	BW 212-01	5/3/2012	GW		0.8 U	0.8 U	8	1 U	10	0.8 U	7	0.8 U	1 U		0.5 U		
Shallow	BW 212-01	5/22/2013	GW		0.8 U	0.8 U	6	1 U	8	0.8 U	5	0.8 U	1 U		0.5 U		
Shallow	BW 212-01	5/13/2014	GW		0.5 U	0.5 U	0.5 U	0.5 U	0.5 U	0.5 U	0.5 U	0.5 U	0.5 U		0.5 U		

Table 2 - Deep and Shallow Groundwater Historical Results and Well Abandonment Rationale
Project Cub Area

Aquifer	Location	Date Sampled	Matrix	Perchlorate µg/L	111TCA µg/L	112TCA µg/L	11DCA µg/L	12DCA µg/L	11DCE µg/L	PCE µg/L	TCE µg/L	cis-12DCE µg/L	VC µg/L	14Dioxane µg/L	Benzene µg/L	Rationale*	Sample Depth
Screening Levels (SLs):				**15**	**200**	**5**	**140**	**5**	**7**	**5**	**5**	**70**	**2**	**7.8**	**5**		(ft)
Shallow	BW 225-01	6/24/2008	GW	45 J	13	0.8 U	3 J	1 U	30	0.8 U	7	0.8 U	1 U	70 U	0.5 U	Abandon: exceeded SL for perchlorate, when last sampled in 2014, with decreasing trend; VOCs trended below SL by 2013; ongoing downgradient monitoring	29
Shallow	BW 225-01	7/30/2009	GW	93	10	0.8 U	3 J	1 U	26	0.8 U	6	0.8 U	1 U	70 U	0.5 U		
Shallow	BW 225-01	3/22/2010	GW	34	4 J	0.8 U	2 J	1 U	12	0.8 U	2 J	0.8 U	1 U	70 U	0.5 U		
Shallow	BW 225-01	8/31/2011	GW	39	5	0.8 U	3 J	1 U	16	0.8 U	4 J	0.8 U	1 U		0.5 U		
Shallow	BW 225-01	5/3/2012	GW	31	4 J	0.8 U	2 J	1 U	11	0.8 U	3 J	0.8 U	1 U		0.5 U		
Shallow	BW 225-01	5/3/2012	GW	30	4 J	0.8 U	2 J	1 U	5 J	0.8 U	3 J	0.8 U	1 U		0.5 U		
Shallow	BW 225-01	5/23/2013	GW	22	2 J	0.8 U	2 J	1 U	7	0.8 U	2 J	0.8 U	1 U		0.5 U		
Shallow	BW 225-01	5/14/2014	GW	20													
Shallow	SW 115-01S	9/1/2004	GW	40.1												Abandon: below SLs for all COCs when last sampled in 2014; previously exceeded for perchlorate only, with decreasing trend; redundant with downgradient monitoring	9
Shallow	SW 115-01S	11/4/2004	GW	14.1													
Shallow	SW 115-01S	11/22/2005	GW		0.8 U	0.8 U	1 U	1 U	0.8 U	0.8 U	1 U	0.8 U	1 U		0.5 U		
Shallow	SW 115-01S	5/29/2008	GW	190	5 UJ	5 UJ	5 UJ	5 UJ	5 UJ	5 UJ	5 UJ	5 UJ	5 UJ		5 UJ		
Shallow	SW 115-01S	5/29/2008	GW	190	5 UJ	5 UJ	5 UJ	5 UJ	5 UJ	5 UJ	5 UJ	5 UJ	5 UJ		5 UJ		
Shallow	SW 115-01S	9/12/2011	GW	63	0.8 U	0.8 U	1 U	1 U	0.8 U	0.8 U	1 U	0.8 U	1 U		0.5 U		
Shallow	SW 115-01S	12/12/2011	GW	100													
Shallow	SW 115-01S	5/9/2012	GW	17													
Shallow	SW 115-01S	5/24/2013	GW	26	0.8 U	0.8 U	1 U	1 U	0.8 U	0.8 U	1 U	0.8 U	1 U		0.5 U		
Shallow	SW 115-01S	5/16/2014	GW	3.4	0.5 U	0.5 U	0.5 U	0.5 U	0.5 U	0.5 U	0.5 U	0.5 U	0.5 U		0.5 U		
Shallow	SW 115-01S	11/12/2014	GW	15													
Deep	DW 76-01	11/25/2008	GW	2600	41	0.8 U	10	1 U	460	0.9 J	1 U	0.8 U	1 U	70 U	0.5 U	Retain and Sample	47
Deep	DW 76-01	10/13/2009	GW	2200	140	0.8 J	32	2 J	580	2 J	1 J	0.8 U	3 J	70 U	0.5 U		
Deep	DW 76-01	3/26/2010	GW	1400	210	0.8 U	20	1 J	1100	2 J	1 U	0.8 U	2 J	70 U	0.5 U		
Deep	DW 76-01	11/10/2010	GW		88	0.8 U	17	1 U	890	2 J	1 U	0.8 U	1 J	70 U	0.5 U		
Deep	DW 76-01	9/12/2011	GW	1100	74	0.8 U	20	1 J	1000	2 J	1 U	0.8 U	1 J	24 J	0.5 U		
Deep	DW 76-01	5/1/2012	GW		69	0.8 U	17	1 J	1000	2 J	1 U	0.8 U	1 U		0.5 U		
Deep	DW 76-01	5/29/2013	GW	1200	81	0.8 U	16	1 J	900	2 J	1 U	0.8 U	1 U	31 j	0.5 U		
Deep	DW 76-01	5/15/2014	GW	1500	580	0.9 J	29	2	1200	3	1	0.5 U	2	62	0.5 U		
Deep	DW 76-01	5/13/2015	GW	1600	240	1 U	17	1 U	890	1 J	1 U	1 U	1 U	68	1 U		
Deep	DW 76-01	3/31/2016	GW	1400	120	0.5 U	15	1	710	2	0.7 J	0.5 U	0.7 J	40	0.5 U		
Deep	DW 76-01	4/19/2017	GW	1500	640	0.5 U	21	0.8 J	1700	2	1	0.5 U	0.5 U	13	0.5 U		
Deep	DW 200-01	6/23/2008	GW	1 U	0.8 U	0.8 U	1 U		0.8 U	0.8 U	1 U	0.8 U	1 U	70 U	0.5 U	Retain and Sample - Sentinel Well	Artesian
Deep	DW 200-01	10/14/2009	GW	0.2 U	0.8 U	0.8 U	1 U	1 U	0.8 U	0.8 U	1 U	0.8 U	1 U	70 U	0.5 U		
Deep	DW 200-01	3/23/2010	GW	0.2 U	0.8 U	0.8 U	1 U	1 U	0.8 U	0.8 U	1 U	0.8 U	1 U	70 U	0.5 U		
Deep	DW 200-01	9/2/2011	GW	0.2 U	0.8 U	0.8 U	1 U	1 U	0.8 U	0.8 U	1 U	0.8 U	1 U	0.048 UJ	0.5 U		
Deep	DW 200-01	5/3/2012	GW	0.79 J	0.8 U	0.8 U	1 U	1 U	0.8 U	0.8 U	1 U	0.8 U	1 U		0.5 U		
Deep	DW 200-01	5/29/2013	GW	1 U	0.8 U	0.8 U	1 U	1 U	0.8 U	0.8 U	1 U	0.8 U	1 U	0.051 U	0.5 U		
Deep	DW 200-01	11/18/2013	GW	0.2 U	0.8 U	0.8 U	1 U	1 U	0.8 U	0.8 U	1 U	0.8 U	1 U	70 U	0.5 U		
Deep	DW 200-01	5/18/2014	GW	1 U	0.5 U	0.5 U	0.5 U	0.5 U	0.5 U	0.5 U	0.5 U	0.5 U	0.5 U	0.073 J	0.5 U		
Deep	DW 200-01	5/13/2015	GW	0.2 U	0.5 U	0.5 U	1	0.5 U	3	0.5 U	0.5 U	0.5 U	0.5 U		0.5 U		
Deep	DW 200-01	11/5/2015	GW	0.2 U	0.5 U	0.5 U	1	0.5 U	3	0.5 U	0.5 U	0.5 U	0.5 U		0.5 U		
Deep	DW 200-01	3/30/2016	GW	0.2 U	0.5 U	0.5 U	1	0.5 U	5	0.5 U	0.5 U	0.5 U	0.5 U		0.5 U		
Deep	DW 200-01	10/27/2016	GW	0.2 U	0.5 U	0.5 U	1	0.5 U	2	0.5 U	0.5 U	0.5 U	0.5 U		0.5 U		
Deep	DW 200-01	4/18/2017	GW	0.2 U	0.5 U	0.5 U	1	0.5 U	0.8 J	0.5 U	0.5 U	0.5 U	0.5 U		0.5 U		

Table 2 - Deep and Shallow Groundwater Historical Results and Well Abandonment Rationale
Project Cub Area

Aquifer	Location	Date Sampled	Matrix	Perchlorate µg/L	111TCA µg/L	112TCA µg/L	11DCA µg/L	12DCA µg/L	11DCE µg/L	PCE µg/L	TCE µg/L	cis-12DCE µg/L	VC µg/L	14Dioxane µg/L	Benzene µg/L	Rationale*	Sample Depth
Screening Levels (SLs):				**15**	**200**	**5**	**140**	**5**	**7**	**5**	**5**	**70**	**2**	**7.8**	**5**		(ft)
Deep	DW 213-01	8/14/2008	GW	49	0.8 U	0.8 U	1 U	1 U	0.8 U	0.8 U	1 U	0.8 U	1 U	70 U	0.5 U	Retain and Sample	114
Deep	DW 213-01	10/8/2009	GW	58	0.8 U	0.8 U	1 U	1 U	0.8 U	0.8 U	1 U	0.8 U	1 U	70 U	0.5 U		
Deep	DW 213-01	3/23/2010	GW	39	0.8 U	0.8 U	1 U	1 U	0.8 U	0.8 U	1 U	0.8 U	1 U	70 U	0.5 U		
Deep	DW 213-01	9/1/2011	GW	45													
Deep	DW 213-01	5/7/2012	GW	43													
Deep	DW 213-01	5/21/2013	GW	43	0.8 U	0.8 U	1 U	1 U	0.8 U	0.8 U	1 U	0.8 U	1 U		0.5 U		
Deep	DW 213-01	5/15/2014	GW	44													
Deep	DW 213-01	5/14/2015	GW	54	0.5 U	0.5 U	0.5 U	0.5 U	0.5 U	0.5 U	0.5 U	0.5 U	0.5 U		0.5 U		
Deep	DW 213-01	3/29/2016	GW	52	0.5 U	0.5 U	0.5 U	0.5 U	0.5 U	0.5 U	0.5 U	0.5 U	0.5 U		0.5 U		
Deep	DW 213-01	4/18/2017	GW	56	0.5 U	0.5 U	0.5 U	0.5 U	0.5 U	0.5 U	0.5 U	0.5 U	0.5 U		0.5 U		
Deep	BW NE-01D	5/11/2006	GW	6	0.8 U	0.8 U	1 U	1 U	0.8 U	0.8 U	1 U	0.8 U	1 U		0.5 U	Retain for water levels only; below SLs for all COCs for >3 years	20
Deep	BW NE-01D	8/15/2006	GW	1.9	0.8 U	0.8 U	1 U	1 U	0.8 U	0.8 U	1 U	0.8 U	1 U		0.5 U		
Deep	BW NE-01D	11/17/2006	GW	0.7 J													
Deep	BW NE-01D	9/6/2011	GW	0.42 J	0.8 U	0.8 U	1 U	1 U	0.8 U	0.8 U	1 U	0.8 U	1 U		0.5 U		
Deep	BW NE-01D	5/29/2013	GW	1 U	0.8 U	0.8 U	1 U	1 U	0.8 U	0.8 U	1 U	0.8 U	1 U		0.5 U		
Deep	BW NE-01D	5/14/2014	GW	1 U	0.5 U	0.5 U	0.5 U	0.5 U	0.5 U	0.5 U	0.5 U	0.5 U	0.5 U		0.5 U		
Deep	DW SB-02	9/4/2009	GW	2 U	0.8 U	0.8 U	4 J	1 U	11	0.8 J	1 J	0.8 U	1 U	70 U	0.5 U	Retain and Sample - Sentinel Well	Artesian
Deep	DW SB-02	3/23/2010	GW	0.2 U	0.8 U	0.8 U	4 J	1 U	11	0.8 U	1 J	0.8 U	1 U	70 U	0.5 U		
Deep	DW SB-02	4/5/2011	GW		0.8 U	0.8 U	4 J	1 U	10	0.8 U	1 J	0.8 U	1 U	70 U	0.5 U		
Deep	DW SB-02	9/1/2011	GW	0.2 U	0.8 U	0.8 U	4 J	1 U	11	0.8 U	1 U	0.8 U	1 U	0.19 J	0.5 U		
Deep	DW SB-02	12/12/2011	GW		0.8 U	0.8 U	3 J	1 U	10	0.8 U	1 U	0.8 U	1 U		0.5 U		
Deep	DW SB-02	5/1/2012	GW	0.2 U	0.8 U	0.8 U	4 J	1 U	11	0.9 J	1 J	0.8 U	1 U		0.5 U		
Deep	DW SB-02	11/7/2012	GW		0.8 U	0.8 U	4 J	1 U	11	0.8 U	1 J	0.8 U	1 U		0.5 U		
Deep	DW SB-02	5/28/2013	GW	1 U	0.8 U	0.8 U	4 J	1 U	11	0.8 U	1 U	0.8 U	1 U	0.37	0.5 U		
Deep	DW SB-02	11/18/2013	GW	0.2 U	0.8 U	0.8 U	3 J	1 U	8	0.8 U	1 U	0.8 U	1 U	70 U	0.5 U		
Deep	DW SB-02	5/19/2014	GW	1 U	0.5 U	0.5 U	4	0.5 U	10	0.5 J	0.9 J	0.5 U	0.5 U	0.29	0.5 U		
Deep	DW SB-02	11/11/2014	GW		0.5 U	0.5 U	4	0.5 U	9	0.6 J	1 J	0.5 U	0.5 U		0.5 U		
Deep	DW SB-02	5/12/2015	GW	0.2 U	0.5 U	0.5 U	3	0.5 U	8	0.6 J	0.8 J	0.5 U	0.5 U	0.32	0.5 U		
Deep	DW SB-02	5/12/2015	GW	0.2 U	0.5 U	0.5 U	3	0.5 U	8	0.5 J	0.8 J	0.5 U	0.5 U	0.29	0.5 U		
Deep	DW SB-02	11/5/2015	GW	0.2 U	0.5 U	0.5 U	4	0.5 U	11	0.5 U	1	0.5 U	0.5 U		0.5 U		
Deep	DW SB-02	3/29/2016	GW	0.2 U	0.5 U	0.5 U	5	0.5 U	10	0.5 U	1	0.5 U	0.5 U	0.34	0.5 U		
Deep	DW SB-02	3/29/2016	GW	0.2 U	0.5 U	0.5 U	5	0.5 U	11	0.5 U	1	0.5 U	0.5 U	0.35	0.5 U		
Deep	DW SB-02	10/27/2016	GW	0.2 U	0.5 U	0.5 U	5	0.5 U	11	0.5 U	0.7 J	0.5 U	0.5 U		0.5 U		
Deep	DW SB-02	4/18/2017	GW	0.2 U	0.5 U	0.5 U	4	0.5 U	9	0.5 U	0.9 J	0.5 U	0.5 U	2.4 u	0.5 U		
Deep	DW SB-02	4/18/2017	GW	0.2 U	0.5 U	0.5 U	4	0.5 U	9	0.5 U	0.9 J	0.5 U	0.5 U	6.9 u	0.5 U		

Table 2 - Deep and Shallow Groundwater Historical Results and Well Abandonment Rationale
Project Cub Area

Aquifer	Location	Date Sampled	Matrix	Perchlorate µg/L	111TCA µg/L	112TCA µg/L	11DCA µg/L	12DCA µg/L	11DCE µg/L	PCE µg/L	TCE µg/L	cis-12DCE µg/L	VC µg/L	14Dioxane µg/L	Benzene µg/L	Rationale*	Sample Depth
Screening Levels (SLs):				**15**	**200**	**5**	**140**	**5**	**7**	**5**	**5**	**70**	**2**	**7.8**	**5**		(ft)
Deep	BW 90-01	8/12/2008	GW	6.3	0.8 U	0.8 U	1 U	1 U	0.8 U	0.8 U	1 U	0.8 U	1 U	70 U	0.5 U	Abandon: below SLs for 3 years	70
Deep	BW 90-01	7/28/2009	GW	3.5													
Deep	BW 90-01	10/14/2009	GW		0.8 U	0.8 U	1 U	1 U	0.8 U	0.8 U	1 U	0.8 U	1 U	70 U	0.5 U		
Deep	BW 90-01	3/22/2010	GW	0.2 U	0.8 U	0.8 U	1 U	1 U	0.8 U	0.8 U	1 U	0.8 U	1 U	70 U	0.5 U		
Deep	BW 90-01	3/22/2010	GW	0.2 U	0.8 U	0.8 U	1 U	1 U	0.8 U	0.8 U	1 U	0.8 U	1 U	70 U	0.5 U		
Deep	BW 90-01	5/23/2013	GW	1 U													
Deep	DW-2	5/17/2002	GW		-9999 U	1 U	1 U	1 U	1 U	1 U	1 U	1 U	1 U			Abandon: below SLs for >3 years	125
Deep	DW-2	5/21/2003	GW	17.8	1.5	1 U	1.1	1 U	1 U	1 U	1 U	1 U	1 U				
Deep	DW-2	4/23/2004	GW	6.5 J	0.9 J	0.8 U	1 J	1 U	0.8 U	0.8 U	1 U	0.8 U	1 U		0.5 U		
Deep	DW-2	11/16/2006	GW	390	0.8 U	0.8 U	1 J	1 U	4 J	3 J	1 U	0.8 U	1 U		0.5 U		
Deep	DW-2	2/16/2007	GW	0.3 J													
Deep	DW-2	9/27/2007	GW	0.3 J	0.8 U	0.8 U	1 U	1 U	0.8 U	0.8 U	1 U	0.8 U	1 U		0.5 U		
Deep	DW-2	5/15/2008	GW	0.93 J	5 UJ	5 UJ	5 UJ	5 UJ	5 UJ	5 UJ	5 UJ	5 UJ	5 UJ		5 UJ		
Deep	DW-2	10/21/2009	GW	0.2 U	0.8 U	0.8 U	1 U	1 U	0.8 U	0.8 U	1 U	0.8 U	1 U	70 U	0.5 U		
Deep	DW-2	3/18/2010	GW	0.2 U	0.8 U	0.8 U	1 U	1 U	0.8 U	0.8 U	1 U	0.8 U	1 U	70 U	0.5 U		
Deep	DW-2	5/22/2013	GW	1 U	0.8 U	0.8 U	1 U	1 U	0.8 U	0.8 U	1 U	0.8 U	1 U		0.5 U		
Deep	DW-2	5/14/2015	GW	0.2 U	0.5 U	0.5 U	0.5 U	0.5 U	0.5 U	0.5 U	0.5 U	0.8 J	0.5 U		0.5 U		
Deep	DW-2	3/29/2016	GW	0.2 U	0.5 U	0.5 U	0.5 U	0.5 U	0.5 U	0.5 U	0.5 U	0.5 U	0.5 U		0.5 U		
Deep	DW-2	4/17/2017	GW	0.4 J	0.5 U	0.5 U	0.5 U	0.5 U	0.5 U	0.5 U	0.5 U	0.5 U	0.5 U		0.5 U		
Deep	DW-10	4/6/2004	GW	3 J	0.8 U	0.8 U	1 U	1 U	0.8 U	0.8 U	1 U	0.8 U	1 U		0.5 U	Abandon: below SLs for >3 years, when last sampled in 2013	190
Deep	DW-10	8/14/2008	GW	12	0.8 U	0.8 U	1 U	1 U	0.8 U	0.8 U	1 U	0.8 U	1 U	70 U	0.5 U		
Deep	DW-10	8/14/2008	GW	12	0.8 U	0.8 U	1 U	1 U	0.8 U	0.8 U	1 U	0.8 U	1 U	70 U	0.5 U		
Deep	DW-10	10/21/2009	GW	13	0.8 U	0.8 U	1 U	1 U	0.8 U	0.8 U	1 U	0.8 U	1 U	70 U	0.5 U		
Deep	DW-10	3/18/2010	GW	4	0.8 U	0.8 U	1 U	1 U	0.8 U	0.8 U	1 U	0.8 U	1 U	70 U	0.5 U		
Deep	DW-10	5/21/2013	GW	7.3	0.8 U	0.8 U	1 U	1 U	0.8 U	0.8 U	1 U	0.8 U	1 U		0.5 U		
Deep	BW 78-11D	3/3/2005	GW	399												Abandon: exceeds SL for perchlorate only; redundant with nearby wells and ongoing downgradient monitoring	17
Deep	BW 78-11D	3/31/2010	GW	38	0.8 U	0.8 U	1 U	1 U	0.8 U	0.8 U	1 U	0.8 U	1 U	70 U	0.5 U		
Deep	BW 78-11D	9/8/2011	GW	32	0.8 U	0.8 U	1 U	1 U	0.8 U	0.8 U	1 U	0.8 U	1 U		0.5 U		
Deep	BW 78-11D	5/15/2012	GW		0.8 U	0.8 U	1 U	1 U	0.8 U	0.8 U	1 U	0.8 U	1 U		0.5 U		
Deep	BW 78-11D	5/30/2013	GW	35	0.8 U	0.8 U	1 U	1 U	0.8 U	0.8 U	1 U	0.8 U	1 U		0.5 U		
Deep	BW 78-11D	5/15/2014	GW	45	0.5 U	0.5 U	0.5 U	0.5 U	0.5 U	0.5 U	0.5 U	0.5 U	0.5 U		0.5 U		
Deep	DW 85-01	8/14/2008	GW	26	0.8 U	0.8 U	1 U	1 U	0.9 J	0.8 U	1 U	0.8 U	1 U	70 U	0.5 U	Abandon: below SLs for all COCs in 2013 and 2014; also below for all COCs in 2011 except for perchlorate in a duplicate sample	73
Deep	DW 85-01	10/9/2009	GW	21	0.8 U	0.8 U	1 U	1 U	0.8 U	0.8 U	1 U	0.8 U	1 U	70 U	0.5 U		
Deep	DW 85-01	3/22/2010	GW	19	0.8 U	0.8 U	1 U	1 U	0.8 U	0.8 U	1 U	0.8 U	1 U	70 U	0.5 U		
Deep	DW 85-01	8/30/2011	GW	12	0.8 U	0.8 U	1 U	1 U	0.8 U	0.8 U	1 U	0.8 U	1 U		0.5 U		
Deep	DW 85-01	8/30/2011	GW	16	0.8 U	0.8 U	1 U	1 U	0.8 U	0.8 U	1 U	0.8 U	1 U		0.5 U		
Deep	DW 85-01	5/28/2013	GW	7.9	0.8 U	0.8 U	1 U	1 U	0.8 U	0.8 U	1 U	0.8 U	1 U		0.5 U		
Deep	DW 85-01	5/15/2014	GW	4.6													

Table 2 - Deep and Shallow Groundwater Historical Results and Well Abandonment Rationale
Project Cub Area

Aquifer	Location	Date Sampled	Matrix	Perchlorate µg/L	111TCA µg/L	112TCA µg/L	11DCA µg/L	12DCA µg/L	11DCE µg/L	PCE µg/L	TCE µg/L	cis-12DCE µg/L	VC µg/L	14Dioxane µg/L	Benzene µg/L	Rationale*	Sample Depth
Screening Levels (SLs):				**15**	**200**	**5**	**140**	**5**	**7**	**5**	**5**	**70**	**2**	**7.8**	**5**		(ft)
Deep	DW-22	4/7/2004	GW	617	4 J	0.8 U	1 U	1 U	10	0.8 U	1 U	0.8 U	1 U		0.5 U	Abandon: exceeded SL for VC only, when last sampled in 2014; earlier sampling events showed exceedances of perchlorate and 11DCE; located within capture zone of DW-13; redundant with nearby DW 76-01, which has similar COCs at higher concentrations.	184
Deep	DW-22	5/9/2006	GW	1.2	2 J	0.8 U	2 J	1 U	8	6	1 U	0.8 U	1 U		0.5 U		
Deep	DW-22	2/19/2007	GW	0.5 J	0.8 U	0.8 U	5 J	1 U	5 J	2 J	1 U	1 J	3 J		0.5 U		
Deep	DW-22	9/28/2009	GW	0.2 U	12	0.8 U	49	1 U	190	0.8 U	1 U	0.8 U	4 J	70 U	0.5 U		
Deep	DW-22	2/3/2010	GW	2 U	11	0.8 U	61	1 U	190	0.8 U	1 U	0.8 U	17	70 U	0.5 U		
Deep	DW-22	4/6/2010	GW	23	5 J	0.8 U	55	1 U	160	0.8 U	1 U	0.8 U	17	70 U	0.5 U		
Deep	DW-22	6/16/2010	GW	0.2 U	3 J	0.8 U	61	1 U	94	0.8 U	1 U	0.8 U	45	70 U	0.5 U		
Deep	DW-22	8/10/2010	GW	0.2 U	2 J	0.8 U	61	1 U	17	0.8 U	1 U	0.8 U	15	70 U	0.5 U		
Deep	DW-22	8/10/2010	GW	2 U	2 J	0.8 U	62	1 U	18	0.8 U	1 U	0.8 U	15	70 U	0.5 U		
Deep	DW-22	10/6/2010	GW	0.2 U	0.8 U	0.8 U	70	1 U	13	0.8 U	1 U	0.8 U	11	70 U	0.5 U		
Deep	DW-22	12/6/2010	GW	0.2 U	0.8 U	0.8 U	72	1 U	10	0.8 U	1 U	0.8 U	8	70 U	0.5 U		
Deep	DW-22	2/3/2011	GW	2 U	0.8 U	0.8 U	70	1 U	9	0.8 U	1 U	0.8 U	6	70 U	0.5 U		
Deep	DW-22	6/9/2011	GW	0.2 U	0.8 U	0.8 U	74	1 U	7	0.8 U	1 U	0.8 U	5 J	70 U	0.5 U		
Deep	DW-22	6/9/2011	GW	0.2 U	0.8 U	0.8 U	75	1 U	7	0.8 U	1 U	0.8 U	5 J	70 U	0.5 U		
Deep	DW-22	9/13/2011	GW	0.2 U	0.8 U	0.8 U	68	1 U	4 J	0.8 U	1 U	0.8 U	3 J		0.5 U		
Deep	DW-22	12/13/2011	GW	0.2 U	0.8 U	0.8 U	76	1 U	4 J	0.8 U	1 U	0.8 U	5		0.5 U		
Deep	DW-22	5/9/2012	GW	0.2 U	0.8 U	0.8 U	76	1 U	4 J	0.8 U	1 U	0.8 U	3 J		0.5 U		
Deep	DW-22	11/6/2012	GW	0.2 U	0.8 U	0.8 U	74	1 U	2 J	0.8 U	1 U	0.8 U	3 J		0.5 U		
Deep	DW-22	5/28/2013	GW	1 U	0.8 U	0.8 U	70	1 U	3 J	0.8 U	1 U	0.8 U	3 J		0.5 U		
Deep	DW-22	11/19/2013	GW	290	0.8 U	0.8 U	4 J	1 U	4 J	0.8 U	1 U	0.8 U	1 U	70 U	0.5 U		
Deep	DW-22	5/14/2014	GW	170	0.5 U	0.5 U	14	0.5 U	5	0.5 U	0.5 U	0.5 U	0.9 J		0.5 U		
Deep	DW-22	11/11/2014	GW	2.7	0.5 U	0.5 U	39	0.5 U	2	0.5 U	0.5 U	0.5 U	3		0.5 U		
Deep	DW-31D	11/12/2004	GW	0.7 U	1 J	0.8 U	2 J	1 U	6	4 J	1 U	0.8 U	1 U		0.5 U	Abandon: below SLs for all COCs for >3 years, except 11DCE, which has exceeded the SL of 7 by 1 ug/L in 2 of the last 7 years and one other time since 2004; located beyond the general plume area	255
Deep	DW-31D	2/17/2005	GW	0.7 U	3 J	0.8 U	2 J	1 U	21	0.8 U	1 U	0.8 U	1 U		0.5 U		
Deep	DW-31D	6/3/2008	GW		5 UJ	5 UJ	1.2 J	5 UJ	2.4 J	5 UJ	5 UJ	5 UJ	5 UJ		5 UJ		
Deep	DW-31D	9/8/2011	GW	0.2 U	0.8 U	0.8 U	2 J	1 U	5 J	0.8 U	1 U	0.8 U	1 U		0.5 U		
Deep	DW-31D	5/1/2012	GW		0.8 U	0.8 U	3 J	1 U	8	0.8 U	1 U	0.8 U	1 U		0.5 U		
Deep	DW-31D	5/24/2013	GW	1 U	0.8 U	0.8 U	2 J	1 U	5 J	0.8 U	1 U	0.8 U	1 U	0.39	0.5 U		
Deep	DW-31D	5/14/2014	GW	1 U	0.5 U	0.5 U	2	0.5 U	6	0.5 U	0.5 U	0.5 U	0.5 U		0.5 U		
Deep	DW-31D	5/14/2015	GW	0.45 J	0.5 U	0.5 U	2	0.5 U	4	0.5 U	0.5 U	0.5 U	0.5 U		0.5 U		
Deep	DW-31D	3/30/2016	GW	0.2 U	0.5 U	0.5 U	5	0.5 U	8	0.5 U	0.5 U	0.5 U	0.5 U		0.5 U		
Deep	DW-31D	4/18/2017	GW	0.2 U	0.5 U	0.5 U	1	0.5 U	3	0.5 U	0.5 U	0.5 U	0.5 U		0.5 U		

Notes: All well were evaluated for potential abandonment with respect to the objectives of the approved 2015 Sampling and Analysis Plan, water level needs, if any, the general presence of stable to decreasing concentrations trends across the Site, geographic position, plume position, planned restriction against the use of ground water, planned requirement for vapor barriers as part of redevelopment, USEPA's Vapor Intrusion Screening Level calculator, and redundancy (evaluated by COCs, sample depth, and groundwater flow considerations) in meeting objectives. The evaluation of all wells utilized the most recent sampling data for each well, which is from 2017 for source, performance, and sentinel wells and from the years indicated in the "rationale summary" column for "water level" only wells under the 2015 SAP.

* The rationale for well abandonment may include reference to other wells with an indication of sampling depth in those other wells provided in parentheses.

111TCA = 1,1,1-trichlorethane
112TCA = 1,1,2-trichlorethane
11DCA = 1,1-dichlorethane
12DCA = 1,2-dichlorethane
11DCE = 1,1-dichlorethene
PCE = tetrachloroethene
TCE = trichloroethene
cis-12DCE = cis1,2-dichloroethene
VC = vinyl chloride

Table 3 - Shallow Groundwater Historical Results and Well Abandonment Rationale
Excluding Wells in Project Cub Area

Aquifer	Location	Date Sampled	Matrix	Perchlorate µg/L	111TCA µg/L	112TCA µg/L	11DCA µg/L	12DCA µg/L	11DCE µg/L	PCE µg/L	TCE µg/L	cis-12DCE µg/L	VC µg/L	14Dioxane µg/L	Benzene µg/L	Rationale	Sample Depth
Screening Levels (SLs):				**15**	**200**	**5**	**140**	**5**	**7**	**5**	**5**	**70**	**2**	**7.8**	**5**		(ft)
Shallow	BW 14-02S	11/9/2004	GW	4650	19	0.8 U	2 J	1 U	10	82	6	7	1 U		0.5 U		
Shallow	BW 14-02S	3/3/2005	GW	7740	31	0.8 U	5 J	1 U	14	130	11	11	1 U		0.5 U		
Shallow	BW 14-02S	5/9/2006	GW	11000	49	0.8 U	6	1 U	27	270	17	22	1 U		0.5 U		
Shallow	BW 14-02S	7/29/2009	GW	2700	29	0.8 U	3 J	1 U	15	300	37	34	1 U	70 U	0.5 U		
Shallow	BW 14-02S	3/29/2010	GW	2800	34 J	0.8 U	3 J	1 U	14	310 J	35	30	1 U	70 U	0.5 U		
Shallow	BW 14-02S	11/10/2010	GW		27	0.8 U	2 J	1 U	10	230	26	24	1 U	70 U	0.5 U		
Shallow	BW 14-02S	9/14/2011	GW	2800	27	0.8 U	3 J	1 U	11	240	27	25	1 U		0.5 U		
Shallow	BW 14-02S	5/2/2012	GW	2700	34	0.8 U	3 J	1 U	14	290	33	28	1 U		0.5 U	Retain and Sample	16
Shallow	BW 14-02S	5/2/2012	GW	2700	39	0.8 U	3 J	1 U	13	300	33	32	1 U		0.5 U		
Shallow	BW 14-02S	5/30/2013	GW	2500	40	0.8 U	3 J	1 U	16	250	27	24	1 U		0.5 U		
Shallow	BW 14-02S	5/16/2014	GW	2500	24	0.5 U	2	0.5 U	11	260	24	21	0.5 U		0.5 U		
Shallow	BW 14-02S	5/14/2015	GW	2200	26	0.5 U	2	0.5 U	11	300	29	22	0.5 U		0.5 U		
Shallow	BW 14-02S	4/1/2016	GW	1600	17	0.5 U	1	0.5 U	8	290	29	22	0.5 U		0.5 U		
Shallow	BW 14-02S	4/19/2017	GW	1100	13	0.5 U	1	0.5 U	6	240	26	19	0.5 U		0.5 U		
Shallow	BW 21-04D	11/9/2004	GW	27600	0.8 J	0.8 U	5 J	1 U	4 J	9	2 J	7	1 U		0.5 U		
Shallow	BW 21-04D	3/2/2005	GW	356	0.8 U	0.8 U	10	1 U	0.8 U	1 J	1 U	3 J	1 U		0.5 U		
Shallow	BW 21-04D	5/17/2005	GW	451													
Shallow	BW 21-04D	11/22/2005	GW	1800													
Shallow	BW 21-04D	5/9/2006	GW	3400													
Shallow	BW 21-04D	10/2/2007	GW	6700	0.8 U	0.8 U	2 J	1 U	0.8 U	1 J	1 U	0.8 U	1 U		0.5 U		
Shallow	BW 21-04D	9/14/2011	GW	1800	0.8 U	0.8 U	1 U	1 U	0.8 U	1 J	1 U	0.8 U	1 U		0.5 U	Retain and Sample	19
Shallow	BW 21-04D	5/14/2012	GW	1500													
Shallow	BW 21-04D	5/30/2013	GW	420													
Shallow	BW 21-04D	5/16/2014	GW	250	0.5 U	0.5 U	0.5 U	0.5 U	0.5 U	1	0.5 U	0.5 U	0.5 U		0.5 U		
Shallow	BW 21-04D	5/15/2015	GW	200	0.5 U	0.5 U	0.5 U	0.5 U	0.5 U	0.7 J	0.5 U	0.5 U	0.5 U		0.5 U		
Shallow	BW 21-04D	3/31/2016	GW	240	1	0.5 U	0.5 U	0.5 U	0.5 U	1	0.5 U	0.5 U	0.5 U		0.5 U		
Shallow	BW 21-04D	4/19/2017	GW	140	4	0.5 U	0.5 U	0.5 U	0.5 U	0.7 J	0.5 U	0.5 U	0.5 U		0.5 U		
Shallow	BW 28-02S	6/29/2005	GW	3410	22	0.8 U	6	1 U	25	150	52	21	1 U		0.5 U		
Shallow	BW 28-02S	5/9/2006	GW	3300	17	0.8 U	5	1 U	21	130	49	15	1 U		0.5 U		
Shallow	BW 28-02S	7/28/2009	GW	6100 J	13	0.8 U	4 J	1 U	17	140	25	11 J	1 U	92 J	0.5 U		
Shallow	BW 28-02S	3/16/2010	GW	6000	14	0.8 U	4 J	1 U	19	140	22	11	1 U	80 J	0.5 U		
Shallow	BW 28-02S	9/8/2011	GW	5700	16	0.8 U	3 J	1 U	15	150	20	11	1 U	36 J	0.5 U		
Shallow	BW 28-02S	5/9/2012	GW	2800	14	0.8 U	3 J	1 U	17	190	20	13	1 U		0.5 U	Retain and Sample	17
Shallow	BW 28-02S	5/28/2013	GW	3600	13	0.8 U	3 J	1 U	16	200	20	15	1 U	34 j	0.5 U		
Shallow	BW 28-02S	5/17/2014	GW	2900	13	0.5 U	3	0.5 U	12	190	19	14	0.5 U	28	0.5 U		
Shallow	BW 28-02S	5/14/2015	GW	2800	11	0.5 U	2	0.5 U	10	180	16	14	0.5 U	22	0.5 U		
Shallow	BW 28-02S	4/1/2016	GW	3800	12	0.5 U	2	0.5 U	12	160	14	13	0.5 U	18	0.5 U		
Shallow	BW 28-02S	4/20/2017	GW	3100	11	0.5 U	2	0.5 U	11	170	13	13	0.5 U	4.3	0.5 U		
Shallow	BW 28-04D	11/21/2005	GW	620	94	0.8 U	7	1 U	42	50	4 J	21	1 U		0.5 U		
Shallow	BW 28-04D	5/10/2006	GW		100	0.8 U	9	1 U	47	140	15	19	1 U		0.5 U		
Shallow	BW 28-04D	8/12/2009	GW	350	71	0.8 U	7	1 U	42	95	17	8	1 U	70 U	0.5 U		
Shallow	BW 28-04D	3/16/2010	GW	270	52	0.8 U	5	1 U	36	150	16	6	1 U	70 U	0.5 U		
Shallow	BW 28-04D	9/8/2011	GW	420	63	0.8 U	6	1 U	36	65	8	4 J	1 U		0.5 U		
Shallow	BW 28-04D	5/11/2012	GW	270	42	0.8 U	4 J	1 U	35	130	18	6	1 U		0.5 U	Retain and Sample	21
Shallow	BW 28-04D	5/28/2013	GW	530	40	0.8 U	4 J	1 U	38	64	5 J	3 J	1 U		0.5 U		
Shallow	BW 28-04D	5/15/2014	GW		24	0.5 U	3	0.5 U	25	55	5	3	0.5 U		0.5 U		
Shallow	BW 28-04D	5/13/2015	GW	150	11	0.5 U	2	0.5 U	12	42	1	1	0.5 U		0.5 U		
Shallow	BW 28-04D	3/30/2016	GW	320	15	0.5 U	2	0.5 U	14	70	3	2	0.5 U		0.5 U		
Shallow	BW 28-04D	4/18/2017	GW	540	14	0.5 U	2	0.5 U	15	60	3	3	0.5 U		0.5 U		

Table 3 - Shallow Groundwater Historical Results and Well Abandonment Rationale
Excluding Wells in Project Cub Area

Aquifer	Location	Date Sampled	Matrix	Perchlorate µg/L	111TCA µg/L	112TCA µg/L	11DCA µg/L	12DCA µg/L	11DCE µg/L	PCE µg/L	TCE µg/L	cis-12DCE µg/L	VC µg/L	14Dioxane µg/L	Benzene µg/L	Rationale	Sample Depth
Screening Levels (SLs):				**15**	**200**	**5**	**140**	**5**	**7**	**5**	**5**	**70**	**2**	**7.8**	**5**		(ft)
Shallow	BW 45-03S	11/29/2005	GW	0.52 J	0.8 U	0.8 U	42	1 U	17	82	23	17	1 U		0.5 U		
Shallow	BW 45-03S	5/16/2006	GW		2 J	0.8 U	2 J	1 U	1 J	270	120	85	2 J		0.5 U		
Shallow	BW 45-03S	8/12/2009	GW	88	0.8 U	0.8 U	2 J	1 U	1 J	260	33	150	4 J	70 U	0.5 U		
Shallow	BW 45-03S	3/17/2010	GW	33	0.8 U	0.8 U	2 J	1 U	1 J	250	32	130	4 J	70 U	0.5 U		
Shallow	BW 45-03S	9/7/2011	GW	10	0.8 U	0.8 U	2 J	1 U	1 J	210	28	150	5 J		0.5 U		
Shallow	BW 45-03S	5/7/2012	GW	7.6	0.8 U	0.8 U	2 J	1 U	1 J	230	33	120	4 J		0.5 U		
Shallow	BW 45-03S	11/9/2012	GW		0.8 U	0.8 U	2 J	1 U	1 J	220	36	180	2 J		0.5 U	Retain and Sample	6
Shallow	BW 45-03S	5/29/2013	GW	10	0.8 U	0.8 U	2 J	1 U	1 J	270	46	160	4 J		0.5 U		
Shallow	BW 45-03S	11/21/2013	GW	4	0.8 U	0.8 U	2 J	1 U	1 J	260	42	180	4 J	70 U	0.5 U		
Shallow	BW 45-03S	5/18/2014	GW	9.5	0.5 U	0.5 U	2	0.5 U	0.9 J	280	47	160	5		0.5 U		
Shallow	BW 45-03S	5/15/2015	GW	9.2	0.5 U	0.5 U	1	0.5 U	1	240	41	190	5		0.5 U		
Shallow	BW 45-03S	3/30/2016	GW	2.8	0.5 J	0.5 U	1	0.5 U	0.5 U	300	40	160	4		0.5 U		
Shallow	BW 45-03S	4/18/2017	GW	1	0.5 U	0.5 U	1	0.5 U	0.5 U	240	30	130	3		0.5 U		
Shallow	BW 79-02S	11/22/2005	GW	30	300	0.8 U	15	1 U	76	0.8 U	1 U	0.8 U	1 U		0.5 U		
Shallow	BW 79-02S	5/15/2006	GW	28	380	0.8 U	14	1 U	83	0.8 J	1 U	0.8 U	1 U		0.5 U		
Shallow	BW 79-02S	9/7/2011	GW	11	420	0.8 U	22	1 U	120	0.8 U	1 U	0.8 U	1 U	2.6 J	0.5 U		
Shallow	BW 79-02S	5/15/2012	GW		310	0.8 U	18	1 U	110	0.8 U	1 U	0.8 U	1 U		0.5 U		
Shallow	BW 79-02S	11/8/2012	GW		410	0.8 U	23	1 U	120	0.8 U	1 U	0.8 U	1 U		0.5 U		
Shallow	BW 79-02S	5/30/2013	GW	7.4	610	0.8 U	30	1 U	150	0.8 U	1 U	0.8 U	1 U	3.2	0.5 U	Retain and Sample	10
Shallow	BW 79-02S	5/16/2014	GW	6.8	380	0.5 U	23	0.5 U	110	0.5 U	0.5 U	0.5 U	0.5 U		0.5 U		
Shallow	BW 79-02S	5/13/2015	GW	6.5	330	0.5 U	20	0.5 U	110	1	0.5 U	0.5 U	0.5 U		0.5 U		
Shallow	BW 79-02S	3/30/2016	GW	5.9	440	0.5 U	25	0.5 U	110	0.6 J	0.5 U	0.5 U	0.5 U		0.5 U		
Shallow	BW 79-02S	4/19/2017	GW	6.1	480	0.5 U	29	0.5 U	160	1	0.5 U	0.5 U	0.5 U		0.5 U		
Shallow	BW CG-01D	5/11/2006	GW	22000	2 J	0.8 U	42	1 U	4 J	62	1 J	5 J	1 U		0.5 U		
Shallow	BW CG-01D	8/25/2006	GW	43000	2 J	0.8 U	45	1 U	5	39	1 J	6	1 U		0.5 U		
Shallow	BW CG-01D	11/17/2006	GW	38000	380	0.8 U	49	1 U	5	17	4 J	15	1 U		0.5 U		
Shallow	BW CG-01D	10/1/2007	GW	19000	2 J	0.8 U	74	1 U	9	21	1 J	4 J	1 U		1 J		
Shallow	BW CG-01D	5/23/2008	GW	25000	100 UJ	100 UJ	75 J	100 UJ	100 UJ	100 UJ	100 UJ	100 UJ	100 UJ		100 UJ		
Shallow	BW CG-01D	8/11/2009	GW	24000	1 J	0.8 U	100	1 U	10	28	2 J	7	1 U	70 U	2 J		
Shallow	BW CG-01D	3/31/2010	GW	16000	0.8 U	0.8 U	61	1 U	5	49	1 J	5	1 U	70 U	0.9 J		
Shallow	BW CG-01D	9/9/2011	GW	12000	0.8 U	0.8 U	76	1 U	5	13	1 J	4 J	1 U	9.2 J	2 J	Retain and Sample	32
Shallow	BW CG-01D	9/9/2011	GW	11000	0.8 U	0.8 U	75	1 U	5	13	1 U	4 J	1 U	8.8 J	2 J		
Shallow	BW CG-01D	5/10/2012	GW		0.8 U	0.8 U	26	1 U	0.8 U	8	1 U	1 J	1 U		0.6 J		
Shallow	BW CG-01D	5/30/2013	GW	18000	0.8 U	0.8 U	41	1 U	0.8 U	9	1 J	4 J	1 U	6.5 j	1 J		
Shallow	BW CG-01D	5/30/2013	GW	17000	0.8 U	0.8 U	40	1 U	0.8 U	8	1 J	4 J	1 U	6.3	0.9 J		
Shallow	BW CG-01D	5/15/2014	GW	11000	0.5 U	0.5 U	21	0.5 U	2	11	1	3	0.5 U		0.5 J		
Shallow	BW CG-01D	5/15/2015	GW	5100	0.5 U	0.5 U	13	0.5 U	0.5 U	8	1	3	0.5 U		0.5 U		
Shallow	BW CG-01D	4/1/2016	GW	3700	0.5 U	0.5 U	9	0.5 U	3	5	0.8 J	2	0.5 U		0.5 U		
Shallow	BW CG-01D	4/20/2017	GW	2400	0.5 U	0.5 U	5	0.5 U	0.5 U	2	0.5 U	1	0.5 U		0.5 U		

Table 3 - Shallow Groundwater Historical Results and Well Abandonment Rationale
Excluding Wells in Project Cub Area

Aquifer	Location	Date Sampled	Matrix	Perchlorate µg/L	111TCA µg/L	112TCA µg/L	11DCA µg/L	12DCA µg/L	11DCE µg/L	PCE µg/L	TCE µg/L	cis-12DCE µg/L	VC µg/L	14Dioxane µg/L	Benzene µg/L	Rationale	Sample Depth
Screening Levels (SLs):				**15**	**200**	**5**	**140**	**5**	**7**	**5**	**5**	**70**	**2**	**7.8**	**5**		(ft)
Shallow	BW CM-01S	6/30/2005	GW	32700	8	0.8 U	10	1 U	12	96	1 J	12	1 U		0.5 U		
Shallow	BW CM-01S	5/15/2006	GW	11000	29	0.8 U	13	1 U	29	260	4 J	33	1 U		0.5 U		
Shallow	BW CM-01S	5/15/2006	GW		29	0.8 U	13	1 U	29	260	4 J	33	1 U		0.5 U		
Shallow	BW CM-01S	8/15/2006	GW	68000	43	0.8 U	18	1 U	40	290	6	51	1 U		0.5 U		
Shallow	BW CM-01S	11/17/2006	GW	52000													
Shallow	BW CM-01S	10/2/2007	GW	29000	24	0.8 U	11	1 U	19	280	3 J	25	1 U		0.5 U		
Shallow	BW CM-01S	5/23/2008	GW	30000	18 J	50 UJ	50 UJ	50 UJ	19 J	260 J	50 UJ	33 J	50 UJ		50 UJ		
Shallow	BW CM-01S	8/11/2009	GW	42000	20	0.8 U	11	1 U	26	270	5 J	45	1 U	70 U	0.5 U	Retain and Sample	17
Shallow	BW CM-01S	3/31/2010	GW	29000	17	0.8 U	10	1 U	23	230	4 J	38	1 U	70 U	0.5 U		
Shallow	BW CM-01S	9/8/2011	GW	190	0.8 U	0.8 U	1 U	1 U	0.8 U	2 J	1 U	0.8 U	1 U		0.5 U		
Shallow	BW CM-01S	4/3/2012	GW	6900	1 J	0.8 U	3 J	1 U	3 J	44	1 U	5 J	1 U		0.5 U		
Shallow	BW CM-01S	5/31/2013	GW	4800	0.8 U	0.8 U	2 J	1 U	2 J	23	1 U	2 J	1 U		0.5 U		
Shallow	BW CM-01S	5/15/2014	GW	2400	0.5 J	0.5 U	2	0.5 U	2	24	0.5 U	2	0.5 U		0.5 U		
Shallow	BW CM-01S	5/14/2015	GW	5800	0.8 J	0.5 U	2	0.5 U	3	42	0.7 J	4	0.5 U		0.5 U		
Shallow	BW CM-01S	4/1/2016	GW	4200	0.6 J	0.5 U	3	0.5 U	3	35	0.5 U	4	0.5 U		0.5 U		
Shallow	BW CM-01S	4/19/2017	GW	2000	0.5 U	0.5 U	1	0.5 U	0.5 U	12	0.5 U	1	0.5 U		0.5 U		
Shallow	BW TTU-03D	11/29/2005	GW	1000	13	2 U	14	3 U	11 J	2200	1100	2000	19		2 J		
Shallow	BW TTU-03D	5/15/2006	GW	110	9	0.8 U	15	1 U	12	810	860	2200	32		2 J		
Shallow	BW TTU-03D	11/17/2006	GW		170	2 U	12	2 U	11	680	690	1700	26		2 J		
Shallow	BW TTU-03D	5/30/2008	GW	63 J	250 UJ	250 UJ	250 UJ	250 UJ	250 UJ	390 J	350 J	920 J	250 UJ		250 UJ		
Shallow	BW TTU-03D	8/13/2009	GW	200	1 J	0.8 U	4 J	1 U	4 J	610	280	790	31	70 U	0.9 J		
Shallow	BW TTU-03D	8/13/2009	GW	200	1 J	0.8 U	4 J	1 U	4 J	610	270	810	34	70 U	0.9 J		
Shallow	BW TTU-03D	3/31/2010	GW	140	2 J	2 U	4 J	2 U	2 U	1400	500	460	14	140 U	1 U		
Shallow	BW TTU-03D	9/13/2011	GW	270	2 J	0.8 U	4 J	1 U	3 J	620	170	300	11		1 J	Retain and Sample	20
Shallow	BW TTU-03D	4/4/2012	GW	290	2 J	0.8 U	4 J	1 U	3 J	790	160	260	8		1 J		
Shallow	BW TTU-03D	5/28/2013	GW	73	0.8 U	0.8 U	2 J	1 U	1 J	360	100	270	2 J		0.5 U		
Shallow	BW TTU-03D	5/15/2014	GW	800	0.5 U	0.5 U	0.9 J	0.5 U	0.6 J	170	120	130	3		0.5 U		
Shallow	BW TTU-03D	5/14/2015	GW	71	0.5 U	0.5 U	0.7 J	0.5 U	0.5 J	330	94	100	2		0.5 U		
Shallow	BW TTU-03D	4/1/2016	GW	41	0.5 U	0.5 U	0.6 J	0.5 U	0.7 J	290	88	170	3		0.5 U		
Shallow	BW TTU-03D	4/4/2012	GW	300	2 J	0.8 U	4 J	1 U	3 J	750	170	270	8		1 J		
Shallow	BW TTU-03D	4/20/2017	GW	87	2	0.5 U	0.6 J	0.5 U	1	1900	230	130	5		0.5 U		

Table 3 - Shallow Groundwater Historical Results and Well Abandonment Rationale
Excluding Wells in Project Cub Area

Aquifer	Location	Date Sampled	Matrix	Perchlorate µg/L	111TCA µg/L	112TCA µg/L	11DCA µg/L	12DCA µg/L	11DCE µg/L	PCE µg/L	TCE µg/L	cis-12DCE µg/L	VC µg/L	14Dioxane µg/L	Benzene µg/L	Rationale	Sample Depth
Screening Levels (SLs):				**15**	**200**	**5**	**140**	**5**	**7**	**5**	**5**	**70**	**2**	**7.8**	**5**		(ft)
Shallow	SW 5-04	2/4/2004	GW		45833 J	28.1 J	106 J	22.6 J	266 J	34.5 J	35.6 J	2.7 J	1 UJ			Retain and sample	16
Shallow	SW 5-04	5/6/2004	GW	117	140000	80 U	170 J	100 U	530	80 U	110 J	80 U	100 U		50 U		
Shallow	SW 5-04	8/18/2004	GW	329	110000	80 U	160 J	100 U	550	80 U	100 U	80 U	100 U		50 U		
Shallow	SW 5-04	11/2/2004	GW	331	120000	160 U	270 J	200 U	1400	160 U	200 U	160 U	200 U		100 U		
Shallow	SW 5-04	2/23/2005	GW	405	120000	40	240 J	36	1300	32	89	6	1 U		0.5 U		
Shallow	SW 5-04	5/17/2005	GW		44000	80 U	340 J	100 U	360 J	80 U	100 U	80 U	100 U		50 U		
Shallow	SW 5-04	11/22/2005	GW		69000	80 U	120 J	100 U	620	80 U	100 U	80 U	100 U		50 U		
Shallow	SW 5-04	5/15/2006	GW		800000	400 U	600 J	500 U	2100 J	400 U	500 U	400 U	500 U		250 U		
Shallow	SW 5-04	11/16/2006	GW		81000	30 J	370	25 U	580	60 J	66 J	20 U	25 U		13 U		
Shallow	SW 5-04	4/23/2008	GW											6			
Shallow	SW 5-04	8/3/2009	GW		170000	160 U	630 J	200 U	2600	160 U	200 U	160 U	200 U	14000 U	100 U		
Shallow	SW 5-04	8/4/2009	GW	800													
Shallow	SW 5-04	3/29/2010	GW	570	16000	16 U	46 J	20 U	160	130	27 J	16 U	20 U	1400 U	10 U		
Shallow	SW 5-04	11/11/2010	GW	370													
Shallow	SW 5-04	9/9/2011	GW	360	370000	160 U	2100	200 U	5300	160 U	240 J	160 U	200 U	2.4 J	100 U		
Shallow	SW 5-04	9/9/2011	GW	420	310000	80 U	2100	100 U	5900	210 J	240 J	80 U	100 U	2.3 J	50 U		
Shallow	SW 5-04	12/12/2011	GW	770													
Shallow	SW 5-04	4/4/2012	GW	410	21000	4 J	300	1 U	220	120	33	10	1 U		0.5 U		
Shallow	SW 5-04	11/9/2012	GW	480	32000	40 U	720	50 U	540	98 J	50 U	40 U	50 U		25 U		
Shallow	SW 5-04	5/31/2013	GW	450	200000	80 U	1600	100 U	3000	80 U	140 J	80 U	100 U	3	50 U		
Shallow	SW 5-04	11/20/2013	GW	400	60000	40 U	180 J	50 U	580	88 J	55 J	40 U	50 U	3500 U	25 U		
Shallow	SW 5-04	5/19/2014	GW	460	10000	10 U	33	10 U	210	98	22	10 U	10 U		10 U		
Shallow	SW 5-04	11/11/2014	GW	410													
Shallow	SW 5-04	5/15/2015	GW	420	7600	3 U	9	3 U	82	110	23	8	3 U		3 U		
Shallow	SW 5-04	3/30/2016	GW	350	12000	5 U	51	5 U	180	90	23	5 J	5 U		5 U		
Shallow	SW 5-04	4/18/2017	GW	310	15000	5 U	110	5 U	1700	190	41	12	5 U		5 U		
Shallow	SW 28-41	5/19/2002	GW		52.2	1 U	6.4	1 U	16.3	75	11.4	7.8	1 U			Retain and Sample	8
Shallow	SW 28-41	9/5/2002	GW		72	5 U	8	5 U	20	65	12	9	5 U		5 U		
Shallow	SW 28-41	9/25/2002	GW		68	5 U	7	5 U	21	70	13	10	5 U		5 U		
Shallow	SW 28-41	10/10/2002	GW		67	5 U	8	5 U	22	120	11	9	5 U		5 U		
Shallow	SW 28-41	10/23/2002	GW		47	5 U	5	5 U	14	59	10	8	5 U		5 U		
Shallow	SW 28-41	11/7/2002	GW		63.3	1 U	7.3	1 U	19.7	65.6	12	7.2	1 U		5 UE		
Shallow	SW 28-41	11/7/2002	GW		51	5 U	6	5 U	14	55	10	7	5 U				
Shallow	SW 28-41	11/20/2002	GW		60.7	1 U	7.7	1 U	18.6	69.1	11.6	7.6	1 U				
Shallow	SW 28-41	12/2/2002	GW		48	1 U	6.6	1 U	15.7	61.5	10.2	6.9	1 U				
Shallow	SW 28-41	3/5/2003	GW		41.1		6.9	1 U	14.9	55	11	5.5	1 U				
Shallow	SW 28-41	5/21/2003	GW	207	27.8	1 U	5	1 U	8.9	49.6	10.5	3.6	1 U				
Shallow	SW 28-41	6/10/2003	GW	158													
Shallow	SW 28-41	9/29/2003	GW		14.7	1 U	3.3	1 U	8.6	24.2	6	1.9	1 U				
Shallow	SW 28-41	1/22/2004	GW		10.9	1 U	3	1 U	5.6	21.9	7.1	1.8	1 U				
Shallow	SW 28-41	5/11/2004	GW	1.9 J	10	0.8 U	4 J	1 U	5 J	21	7	3 J	1 U		0.5 U		
Shallow	SW 28-41	8/24/2004	GW	16.5	18	0.8 U	3 J	1 U	12	9	6	2 J	1 U		0.5 U		
Shallow	SW 28-41	11/3/2004	GW	9.7	25	0.8 U	3 J	1 U	10	21	7	3 J	1 U		0.5 U		
Shallow	SW 28-41	3/4/2005	GW	0.7 U	5 J	0.8 U	3 J	1 U	4 J	11	6	2 J	1 U		0.5 U		
Shallow	SW 28-41	5/18/2005	GW	5.7	8	0.8 U	4 J	1 U	4 J	13	6	3 J	1 U		0.5 U		
Shallow	SW 28-41	8/16/2005	GW	47	14	0.8 U	2 J	1 U	8	13	11	4 J	1 U		0.5 U		
Shallow	SW 28-41	11/28/2005	GW	8.8	8	0.8 U	2 J	1 U	5 J	10	5 J	2 J	1 U		0.5 U		
Shallow	SW 28-41	5/12/2006	GW	59	4 J	0.8 U	2 J	1 U	3 J	14	4 J	2 J	1 U		0.5 U		
Shallow	SW 28-41	11/16/2006	GW	0.2 U	6	0.8 U	1 J	1 U	2 J	7	4 J	2 J	1 U		0.5 U		

Table 3 - Shallow Groundwater Historical Results and Well Abandonment Rationale
Excluding Wells in Project Cub Area

Aquifer	Location	Date Sampled	Matrix	Perchlorate µg/L	111TCA µg/L	112TCA µg/L	11DCA µg/L	12DCA µg/L	11DCE µg/L	PCE µg/L	TCE µg/L	cis-12DCE µg/L	VC µg/L	14Dioxane µg/L	Benzene µg/L	Rationale	Sample Depth
Screening Levels (SLs):				**15**	**200**	**5**	**140**	**5**	**7**	**5**	**5**	**70**	**2**	**7.8**	**5**		(ft)
Shallow	SW 28-41	10/3/2007	GW	1.5	1 J	0.8 U	1 J	1 U	1 J	4 J	4 J	5	1 U		0.5 U		
Shallow	SW 28-41	5/20/2008	GW	43	2.6 U	5 UJ	1.3 J	5 UJ	1.8 U	4.8 U	4.1 U	3.6 J	5 UJ		5 UJ		
Shallow	SW 28-41	8/4/2009	GW	560	8	0.8 U	1 J	1 U	3 J	19	4 J	4 J	1 U	70 U	0.5 U		
Shallow	SW 28-41	3/29/2010	GW	930	13	0.8 U	2 J	1 U	5 J	27	4 J	6	1 U	70 U	0.5 U		
Shallow	SW 28-41	9/9/2011	GW	1100	16 U	0.8 U	2 UJ	1 U	4 J	30	4 J	5 J	1 U		0.5 U	Retain and Sample	8
Shallow	SW 28-41	9/9/2011	GW	1100	17 U	0.8 U	2 UJ	1 U	5 J	32	4 J	5 J	1 U		0.5 U		
Shallow	SW 28-41	5/8/2012	GW	760												(cont.)	(cont.)
Shallow	SW 28-41	5/30/2013	GW	570	13	0.8 U	1 J	1 U	3 J	39	4 J	5	1 U		0.5 U		
Shallow	SW 28-41	5/14/2015	GW	430	7	0.5 U	1	0.5 U	2	35	4	8	0.5 U		0.5 U		
Shallow	SW 28-41	3/30/2016	GW	130	4	0.5 U	0.6 J	0.5 U	0.6 J	12	2	2	0.5 U		0.5 U		
Shallow	SW 28-41	4/18/2017	GW	440	8	0.5 U	1	0.5 U	2	24	2	3	0.5 U		0.5 U		
Shallow	SW 40-07A	9/29/2003	GW		2.3	1 U	1.1	1 U	4.1	6167	75.1	569	2.6				
Shallow	SW 40-07A	9/29/2003	GW	752	2.3	1 U	1.1	1 U	4	6205	76.2	578	2.6				
Shallow	SW 40-07A	1/22/2004	GW		1 U	1 U	1 U	1 U	2 J	7861	61	469	3.1 J				
Shallow	SW 40-07A	5/4/2004	GW	373 J	4 U	4 U	5 U	5 U	4 U	5300 J	53 J	590 J	5 U		3 U		
Shallow	SW 40-07A	5/4/2004	GW	135 J	8 U	8 U	10 U	10 U	8 U	7600 J	87 J	920 J	10 U		5 U		
Shallow	SW 40-07A	8/31/2004	GW	569	2 J	0.8 U	1 J	1 U	3 J	1000	13	140	1 U		0.5 U		
Shallow	SW 40-07A	11/10/2004	GW	369	2 U	2 U	3 U	3 U	3 J	1800	49	560	3 J		1 U		
Shallow	SW 40-07A	3/4/2005	GW	1870	4 J	0.8 U	2 J	1 U	7	890	13	210	1 U		0.5 U		
Shallow	SW 40-07A	5/12/2005	GW	1060	2 J	2 U	2 U	2 U	4 J	1600	21	290	2 U		1 U		
Shallow	SW 40-07A	8/16/2005	GW	880	2 J	0.8 U	1 J	1 U	4 J	990	32	270	1 J		0.5 U		
Shallow	SW 40-07A	11/22/2005	GW	860	4 U	4 U	5 U	5 U	7 J	3200	100	1000	13 J		3 U		
Shallow	SW 40-07A	5/16/2006	GW	480	3 J	0.8 U	2 J	1 U	9	730	310	540	2 J		0.5 U		
Shallow	SW 40-07A	11/16/2006	GW	190	4 J	0.8 U	2 J	1 U	10	140	38	3100	300		0.5 U		
Shallow	SW 40-07A	2/14/2007	GW	610	3 J	2 U	2 J	2 U	10 J	560	200	1200	54		1 U	Retain and Sample	11
Shallow	SW 40-07A	10/2/2007	GW	640	2 J	0.8 U	2 J	1 U	6	240	44	1000	230		0.5 U		
Shallow	SW 40-07A	5/16/2008	GW	620	100 UJ	100 UJ	100 UJ	100 UJ	100 UJ	100 UJ	550 J	100 UJ	150 J		100 UJ		
Shallow	SW 40-07A	7/31/2009	GW	620	1 J	0.8 U	1 J	1 U	4 J	500	74	290	14	70 U	0.5 U		
Shallow	SW 40-07A	3/29/2010	GW	310	0.8 U	0.8 U	1 U	1 U	2 J	630	56	260	8	70 U	0.5 U		
Shallow	SW 40-07A	3/29/2010	GW	320	0.8 U	0.8 U	1 U	1 U	3 J	690	59	280	8	70 U	0.5 U		
Shallow	SW 40-07A	9/9/2011	GW	94	8 U	8 U	10 U	10 U	8 U	4900	660	1800	220		5 U		
Shallow	SW 40-07A	9/9/2011	GW	100	10 UJ	4 U	5 U	5 U	5 J	5100	680	1900	220		3 U		
Shallow	SW 40-07A	5/9/2012	GW	700	0.8 U	0.8 U	1 U	1 U	2 J	260	18	100	3 J		0.5 U		
Shallow	SW 40-07A	5/28/2013	GW	560	0.8 J	0.8 U	1 U	1 U	2 J	920	60	310	10		0.5 U		
Shallow	SW 40-07A	5/14/2014	GW	320	0.5 U	0.5 U	0.5 U	0.5 U	0.9 J	510	20	130	5		0.5 U		
Shallow	SW 40-07A	5/13/2015	GW	320	0.5 U	0.5 U	0.5 U	0.5 U	1	1600	44	260	21		0.5 U		
Shallow	SW 40-07A	3/30/2016	GW	290	0.5 U	0.5 U	0.5 U	0.5 U	0.5 U	290	11	110	4		0.5 U		
Shallow	SW 40-07A	4/18/2017	GW	1300	1	0.5 U	0.5 U	0.5 U	1	51	2	16	0.5 U		0.5 U		
Shallow	SW 40-57	11/28/2005	GW	14	3 J	2 U	3 U	3 U	8 J	2400	390	550	46		1 U		
Shallow	SW 40-57	5/16/2006	GW	36	4 J	0.8 U	2 J	1 U	6	980	170	330	40		0.5 U		
Shallow	SW 40-57	8/15/2006	GW	47	3 J	0.8 U	2 J	1 U	7	1500	290	470	64		0.5 U		
Shallow	SW 40-57	11/16/2006	GW	100	4 J	0.8 U	2 J	1 U	7	2300	290	560	71		0.5 U		
Shallow	SW 40-57	10/3/2007	GW	86	3 J	0.8 U	1 J	1 U	5	2000	210	370	71		0.5 U		
Shallow	SW 40-57	5/27/2008	GW	52 J	500 UJ	500 UJ	500 UJ	500 UJ	500 UJ	1500 J	500 UJ	300 J	500 UJ		500 UJ		
Shallow	SW 40-57	8/18/2009	GW	20	2 U	2 U	3 U	3 U	4 J	2600	170	860	62	180 U	1 U		
Shallow	SW 40-57	4/1/2010	GW	19	1 J	0.8 U	1 U	1 U	3 J	1200	110	330	34	70 U	0.5 U	Retain and Sample	12
Shallow	SW 40-57	9/14/2011	GW	23	4 U	4 U	5 U	5 U	4 U	2100	120	390	19 J		3 U		
Shallow	SW 40-57	5/8/2012	GW	18	0.8 U	0.8 U	1 U	1 U	3 J	960	91	240	17		0.5 U		
Shallow	SW 40-57	5/29/2013	GW	33	2 J	0.8 U	1 U	1 U	4 J	1400	120	360	17		0.5 U		
Shallow	SW 40-57	5/18/2014	GW	26	1	0.5 U	0.8 J	0.5 U	3	960	90	320	17		0.5 U		
Shallow	SW 40-57	5/13/2015	GW	18	0.5 J	0.5 U	0.8 J	0.5 U	3	670	51	260	11		0.5 U		
Shallow	SW 40-57	3/31/2016	GW	7.9	0.5 U	0.5 U	0.9 J	0.5 U	2	540	35	170	6		0.5 U		
Shallow	SW 40-57	4/19/2017	GW	8.4	0.5 U	0.5 U	1	0.5 U	2	600	54	240	8		0.5 U		

Table 3 - Shallow Groundwater Historical Results and Well Abandonment Rationale
Excluding Wells in Project Cub Area

Aquifer	Location	Date Sampled	Matrix	Perchlorate µg/L	111TCA µg/L	112TCA µg/L	11DCA µg/L	12DCA µg/L	11DCE µg/L	PCE µg/L	TCE µg/L	cis-12DCE µg/L	VC µg/L	14Dioxane µg/L	Benzene µg/L	Rationale	Sample Depth
Screening Levels (SLs):				**15**	**200**	**5**	**140**	**5**	**7**	**5**	**5**	**70**	**2**	**7.8**	**5**		(ft)
Shallow	SW 42-02	11/6/2002	GW		2.7	1 U	1 U	1 U	8.2	5.4	1 U	1 U	1 U				
Shallow	SW 42-02	5/20/2003	GW	7010	4.6	1 U	1 U	1 U	14.5	16.7	1 U	1 U	1 U				
Shallow	SW 42-02	5/20/2003	GW	6650													
Shallow	SW 42-02	2/3/2004	GW		4	1 U	1.4	1 U	11.4	28	1 U	1.4	1 U				
Shallow	SW 42-02	5/7/2004	GW	3850	4 J	0.8 U	1 J	1 U	9	25	1 U	2 J	1 U		0.5 U		
Shallow	SW 42-02	8/17/2004	GW	2980	3 J	0.8 U	1 U	1 U	6	19	1 U	1 J	1 U		0.5 U		
Shallow	SW 42-02	8/17/2004	GW	3090	3 J	0.8 U	1 J	1 U	6	19	1 U	1 J	1 U		0.5 U		
Shallow	SW 42-02	11/2/2004	GW	2640	3 J	0.8 U	1 U	1 U	4 J	23 J	1 U	1 J	1 U		0.5 U		
Shallow	SW 42-02	11/2/2004	GW	2620	2 J	0.8 U	1 U	1 U	5 J	6 J	1 U	0.8 J	1 U		0.5 U		
Shallow	SW 42-02	2/23/2005	GW	2250												Retain and Sample	7
Shallow	SW 42-02	5/18/2005	GW	1690													
Shallow	SW 42-02	5/17/2006	GW	1200													
Shallow	SW 42-02	9/13/2011	GW	710	0.8 U	0.8 U	1 U	1 U	3 J	3 J	1 U	0.8 U	1 U		0.5 U		
Shallow	SW 42-02	5/16/2012	GW		0.8 J	0.8 U	1 U	1 U	4 J	3 J	1 U	1 J	1 U		0.5 U		
Shallow	SW 42-02	5/31/2013	GW	940	0.8 U	0.8 U	1 U	1 U	4 J	3 J	1 U	0.8 U	1 U		0.5 U		
Shallow	SW 42-02	5/14/2014	GW		0.7 J	0.5 U	0.5 U	0.5 U	4	4	0.5 U	0.6 J	0.5 U		0.5 U		
Shallow	SW 42-02	5/13/2015	GW	520	0.5 U	0.5 U	0.5 U	0.5 U	2	4	0.7 J	3	0.8 J		0.5 U		
Shallow	SW 42-02	4/1/2016	GW	490	0.5 U	0.5 U	0.5 U	0.5 U	0.9 J	2	0.7 J	1	0.5 U		0.5 U		
Shallow	SW 42-02	4/19/2017	GW	1100	0.5 U	0.5 U	0.5 U	0.5 U	1	5	0.5 U	1	0.5 U		0.5 U		
Shallow	SW 47-02	5/4/2004	GW	1220	6	0.8 U	3 J	1 U	9	42	9	8	1 U		0.5 U		
Shallow	SW 47-02	3/4/2005	GW	1410	4 J	0.8 U	2 J	1 U	5	27	4 J	4 J	1 U		0.5 U		
Shallow	SW 47-02	5/18/2005	GW	1390													
Shallow	SW 47-02	5/17/2006	GW	1200													
Shallow	SW 47-02	8/13/2009	GW	970	2 J	0.8 U	2 J	1 U	4 J	25	9	5 J	1 U	70 U	0.5 U		
Shallow	SW 47-02	3/29/2010	GW	730	2 J	0.8 U	1 U	1 U	3 J	19	5	3 J	1 U	70 U	0.5 U		
Shallow	SW 47-02	9/15/2011	GW	43	0.8 U	0.8 U	1 U	1 U	0.8 U	2 J	1 U	0.8 U	1 U		0.5 U		
Shallow	SW 47-02	5/16/2012	GW		0.8 J	0.8 U	1 U	1 U	1 J	8	5 J	2 J	1 U		0.5 U	Retain and Sample	4
Shallow	SW 47-02	5/31/2013	GW	460	1 J	0.8 U	1 U	1 U	2 J	11	6	3 J	1 U		0.5 U		
Shallow	SW 47-02	5/31/2013	GW	460	2 J	0.8 U	1 J	1 U	2 J	14	6	4 J	1 U		0.5 U		
Shallow	SW 47-02	5/14/2014	GW		3	0.5 U	1	0.5 U	4	30	6	5	0.5 U		0.5 U		
Shallow	SW 47-02	5/14/2015	GW	740	3	0.5 U	1	0.5 U	3	36	7	6	0.5 U		0.5 U		
Shallow	SW 47-02	3/30/2016	GW	320	1	0.5 U	0.7 J	0.5 U	2	18	4	3	0.5 U		0.5 U		
Shallow	SW 47-02	4/18/2017	GW	710	2	0.5 U	1	0.5 U	2	21	6	6	0.5 U		0.5 U		

Table 3 - Shallow Groundwater Historical Results and Well Abandonment Rationale
Excluding Wells in Project Cub Area

Aquifer	Location	Date Sampled	Matrix	Perchlorate µg/L	111TCA µg/L	112TCA µg/L	11DCA µg/L	12DCA µg/L	11DCE µg/L	PCE µg/L	TCE µg/L	cis-12DCE µg/L	VC µg/L	14Dioxane µg/L	Benzene µg/L	Rationale	Sample Depth
Screening Levels (SLs):				**15**	**200**	**5**	**140**	**5**	**7**	**5**	**5**	**70**	**2**	**7.8**	**5**		(ft)
Shallow	SW 74-07	8/30/2004	GW	246	0.8 U	0.8 U	1 U	1 U	0.8 U	340	120	520	1 U		0.5 U		
Shallow	SW 74-07	11/4/2004	GW	45.3	0.8 U	0.8 U	1 U	1 U	0.8 U	140	190	600	5 J		0.5 U		
Shallow	SW 74-07	3/4/2005	GW	86.6	0.8 U	0.8 U	1 U	1 U	0.8 U	89	87	230	2 J		0.5 U		
Shallow	SW 74-07	5/17/2005	GW		5 J	0.8 U	1 U	1 U	0.8 U	360	54	51	1 U		0.5 U		
Shallow	SW 74-07	5/17/2006	GW		0.8 U	0.8 U	1 U	1 U	0.8 U	600	34	50	2 J		0.5 U		
Shallow	SW 74-07	10/3/2007	GW	1300	0.8 U	0.8 U	1 U	1 U	0.8 U	230	59	320	17		0.5 U		
Shallow	SW 74-07	5/19/2008	GW	2200	250 UJ	250 UJ	250 UJ	250 UJ	250 UJ	910 J	250 UJ	250 UJ	250 UJ		250 UJ		
Shallow	SW 74-07	8/17/2009	GW	520	0.8 U	0.8 U	1 U	1 U	0.8 U	710	75	150	4 J	70 U	0.5 U		
Shallow	SW 74-07	3/18/2010	GW	1000	0.8 U	0.8 U	1 U	1 U	0.8 U	800	21	26	1 U	70 U	0.5 U		
Shallow	SW 74-07	3/18/2010	GW	950	0.8 U	0.8 U	1 U	1 U	0.8 U	960	22	27	1 J	70 U	0.5 U		
Shallow	SW 74-07	11/10/2010	GW		0.8 U	0.8 U	1 U	1 U	0.8 U	330	35	110	2 J	70 U	0.5 U		
Shallow	SW 74-07	9/14/2011	GW	50	0.8 U	0.8 U	1 U	1 U	0.8 U	290	38	290	4 J		0.5 U		
Shallow	SW 74-07	5/14/2012	GW	130	0.8 U	0.8 U	1 U	1 U	0.8 U	640	26	53	1 U		0.5 U	Retain and Sample	7
Shallow	SW 74-07	5/14/2012	GW	130	0.8 U	0.8 U	1 U	1 U	0.8 U	610	26	52	1 U		0.5 U		
Shallow	SW 74-07	5/31/2013	GW	150 j	0.8 U	0.8 U	1 U	1 U	0.8 U	620	28	65	1 U	0.051 U	0.5 U		
Shallow	SW 74-07	5/31/2013	GW	210	0.8 U	0.8 U	1 U	1 U	0.8 U	660	28	65	1 U	0.055 U	0.5 U		
Shallow	SW 74-07	5/18/2014	GW	210	0.5 U	0.5 U	0.5 U	0.5 U	0.5 U	890	23	17	0.5 U		0.5 U		
Shallow	SW 74-07	5/18/2014	GW	160	0.5 U	0.5 U	0.5 U	0.5 U	0.5 U	770	24	25	0.6 J		0.5 U		
Shallow	SW 74-07	5/14/2015	GW	73	0.5 U	0.5 U	0.5 U	0.5 U	0.5 U	500	19	22	0.5 U		0.5 U		
Shallow	SW 74-07	5/14/2015	GW	74	0.5 U	0.5 U	0.5 U	0.5 U	0.5 U	520	18	22	0.5 U		0.5 U		
Shallow	SW 74-07	3/31/2016	GW	22	0.5 U	0.5 U	0.5 U	0.5 U	0.5 U	440	32	69	0.5 U		0.5 U		
Shallow	SW 74-07	3/31/2016	GW	22	0.5 U	0.5 U	0.5 U	0.5 U	0.5 U	440	32	67	0.5 U		0.5 U		
Shallow	SW 74-07	4/19/2017	GW	95	0.5 U	0.5 U	0.5 U	0.5 U	0.5 U	790	46	91	0.8 J		0.5 U		
Shallow	SW 74-07	4/19/2017	GW	97	0.5 U	0.5 U	0.5 U	0.5 U	0.5 U	800	46	90	0.6 J		0.5 U		
Shallow	SW 222-02	4/3/2003	GW		5 U	5 U	12	5 U	27	5 U	14	2 J	5 U		5 U		
Shallow	SW 222-02	5/23/2003	GW	7.8	1 U	1 U	1 U	1 U	1 U	1 U	1 U	1 U	1 U				
Shallow	SW 222-02	5/30/2008	GW	12	3 J	5 UJ	5 UJ	5 UJ	3.3 J	5 UJ	5 UJ	5 UJ	5 UJ		5 UJ		
Shallow	SW 222-02	3/16/2010	GW	1.8	0.8 U	0.8 U	1 U	1 U	0.8 U	0.8 U	1 U	0.8 U	1 U	70 U	0.5 U		
Shallow	SW 222-02	9/1/2011	GW	13	3 J	0.8 U	1 U	1 U	3 J	0.8 U	1 J	0.8 U	1 U	4.4 J	0.5 U		
Shallow	SW 222-02	5/7/2012	GW	8.6	3 J	0.8 U	1 U	1 U	4 J	0.8 U	1 J	0.8 U	1 U		0.5 U		
Shallow	SW 222-02	5/22/2013	GW	4.6 j	1 Jj	0.8 U	1 U	1 U	2 Jj	0.8 U	1 U	0.8 U	1 U	2.6 j	0.5 U	Retain and Sample - Sentinel Well	5
Shallow	SW 222-02	11/19/2013	GW	5	1 J	0.8 U	1 U	1 U	3 J	0.8 U	1 J	0.8 U	1 U	70 U	0.5 U		
Shallow	SW 222-02	5/13/2014	GW	1 U	0.5 U	0.5 U	0.5 U	0.5 U	0.5 U	0.5 U	0.5 U	0.5 U	0.5 U	0.12	0.5 U		
Shallow	SW 222-02	5/12/2015	GW	0.2 U	0.5 U	0.5 U	0.5 U	0.5 U	0.5 U	0.5 U	0.5 U	0.5 U	0.5 U	0.05 U	0.5 U		
Shallow	SW 222-02	11/6/2015	GW	2.6	0.5 U	0.5 U	0.6 J	0.5 U	2	0.5 U	0.5 J	0.5 U	0.5 U		0.5 U		
Shallow	SW 222-02	3/29/2016	GW	0.32 J	0.5 U	0.5 U	0.5 U	0.5 U	0.5 U	0.5 U	0.5 U	0.5 U	0.5 U	0.05 U	0.5 U		
Shallow	SW 222-02	10/26/2016	GW	0.92 J	0.8 J	0.5 U	0.7 J	0.5 U	2	0.5 U	0.6 J	0.5 U	0.5 U		0.5 U		
Shallow	SW 222-02	4/18/2017	GW	0.36 J	0.5 U	0.5 U	0.5 U	0.5 U	0.5 U	0.5 U	0.5 U	0.5 U	0.5 U	0.05 U	0.5 U		
Shallow	SW SB-03	8/18/2009	GW	2 U	0.8 U	0.8 U	1 J	1 U	2 J	0.9 J	1 U	0.8 U	1 U	70 U	0.5 U		
Shallow	SW SB-03	3/24/2010	GW	2 U	0.8 U	0.8 U	1 U	1 U	0.8 U	0.8 U	1 U	0.8 U	1 U	70 U	0.5 U		
Shallow	SW SB-03	9/1/2011	GW	8.5	0.8 U	0.8 U	1 J	1 U	2 J	0.8 U	1 U	2 J	1 U	1.8 J	0.5 U		
Shallow	SW SB-03	5/3/2012	GW	0.27 J	0.8 U	0.8 U	1 U	1 U	1 J	0.8 U	1 U	0.8 J	1 U		0.5 U		
Shallow	SW SB-03	5/22/2013	GW	1 U	0.8 U	0.8 U	1 U	1 U	0.8 U	0.8 U	1 U	0.8 U	1 U		0.5 U		
Shallow	SW SB-03	11/20/2013	GW	0.53 J	0.8 U	0.8 U	1 J	1 U	2 J	0.8 U	1 U	1 J	1 U	70 U	0.5 U		
Shallow	SW SB-03	5/13/2014	GW	4.7	0.5 U	0.5 U	0.5 U	0.5 U	0.5 U	0.5 U	0.5 U	1	0.5 U		0.5 U	Retain and Sample - Sentinel Well	11
Shallow	SW SB-03	5/12/2015	GW	0.2 U	0.5 U	0.5 U	0.6 J	0.5 U	0.5 U	0.5 U	0.5 U	2	0.5 U	2.9	0.5 U		
Shallow	SW SB-03	11/6/2015	GW	1.4	0.5 U	0.5 U	2	0.5 U	2	0.5 J	0.9 J	3	0.5 U		0.5 U		
Shallow	SW SB-03	3/30/2016	GW	0.38 J	0.5 U	0.5 U	0.5 J	0.5 U	0.5 U	0.5 U	0.5 U	2	0.5 U	3.7	0.5 U		
Shallow	SW SB-03	10/26/2016	GW	0.81 J	0.5 U	0.5 U	0.5 U	0.5 U	0.5 U	0.5 U	0.5 U	0.9 J	0.5 U		0.5 U		
Shallow	SW SB-03	11/6/2015	GW	1.6	0.5 U	0.5 U	2	0.5 U	2	0.5 U	0.8 J	3	0.5 U		0.5 U		
Shallow	SW SB-03	4/18/2017	GW	3.7	0.5 U	0.5 U	0.6 J	0.5 U	0.5 U	0.5 U	0.8 J	2	0.5 U	2.9	0.5 U		

Table 3 - Shallow Groundwater Historical Results and Well Abandonment Rationale
Excluding Wells in Project Cub Area

Aquifer	Location	Date Sampled	Matrix	Perchlorate µg/L	111TCA µg/L	112TCA µg/L	11DCA µg/L	12DCA µg/L	11DCE µg/L	PCE µg/L	TCE µg/L	cis-12DCE µg/L	VC µg/L	14Dioxane µg/L	Benzene µg/L	Rationale	Sample Depth
Screening Levels (SLs):				**15**	**200**	**5**	**140**	**5**	**7**	**5**	**5**	**70**	**2**	**7.8**	**5**		(ft)
Shallow	SW TTU-03	6/11/2008	GW	980	5 UJ	5 UJ	5 UJ	5 UJ	5 UJ	5 UJ	5 UJ	5 UJ	5 UJ		5 UJ		
Shallow	SW TTU-03	3/31/2010	GW	1100	0.8 U	0.8 U	1 U	1 U	0.8 U	0.8 U	1 U	0.8 U	1 U	70 U	0.5 U		
Shallow	SW TTU-03	11/10/2010	GW	1200	0.8 U	0.8 U	1 U	1 U	0.8 U	0.8 U	1 U	0.8 U	1 U	70 U	0.5 U		
Shallow	SW TTU-03	6/15/2011	GW	48	0.8 U	0.8 U	1 U	1 U	0.8 U	0.8 U	1 U	0.8 U	1 U	70 U	0.5 U	Retain and Sample - Part of TTU Monitoring that was transferred from VA DEQ to USEPA in 2012; decreasing trend for perchlorate since 2012; BSL for VOCs since before TTU remediation in 2011	
Shallow	SW TTU-03	12/14/2011	GW	36	0.8 U	0.8 U	1 U	1 U	0.8 U	0.8 U	1 U	0.8 U	1 U		0.5 U		
Shallow	SW TTU-03	5/10/2012	GW	980	0.8 U	0.8 U	1 U	1 U	0.8 U	0.8 U	1 U	0.8 U	1 U		0.5 U		
Shallow	SW TTU-03	11/9/2012	GW	4200	0.8 U	0.8 U	1 U	1 U	0.8 U	0.8 U	1 U	0.8 U	1 U		0.5 U		
Shallow	SW TTU-03	5/29/2013	GW	26000	0.8 U	0.8 U	1 U	1 U	0.8 U	0.8 U	1 U	0.8 U	1 U		0.5 U		
Shallow	SW TTU-03	11/20/2013	GW	3800	0.8 U	0.8 U	1 U	1 U	0.8 U	0.8 U	1 U	0.8 U	1 U	70 U	0.5 U		3
Shallow	SW TTU-03	5/15/2014	GW	2700													
Shallow	SW TTU-03	11/12/2014	GW	1300	0.5 U	0.5 U	0.5 U	0.5 U	0.5 U	0.5 U	0.5 U	0.5 U	0.5 U		0.5 U		
Shallow	SW TTU-03	5/14/2015	GW	1600	0.5 U	0.5 U	0.5 U	0.5 U	0.5 U	0.5 U	0.5 U	0.5 U	0.5 U		0.5 U		
Shallow	SW TTU-03	4/1/2016	GW	460	0.5 U	0.5 U	0.5 U	0.5 U	0.5 U	0.5 U	0.5 U	0.5 U	0.5 U		0.5 U		
Shallow	SW TTU-03	4/20/2017	GW	770	0.5 U	0.5 U	0.5 U	0.5 U	0.5 U	0.5 U	0.5 U	0.5 U	0.5 U		0.5 U		
Shallow	BW 46-02	8/20/2008	GW	0.2 U	0.8 U	0.8 U	1 U	1 U	0.8 U	4 J	2 J	2 J	1 U	70 U	0.5 U	Abandon: below SLs 3 years (2008-2010)	60
Shallow	BW 46-02	7/31/2009	GW	0.2 U	0.8 U	0.8 U	1 U	1 U	0.8 U	0.8 U	1 J	3 J	1 U	70 U	0.5 U		
Shallow	BW 46-02	3/25/2010	GW	0.2 U	0.8 U	0.8 U	1 U	1 U	0.8 U	0.8 U	1 U	2 J	1 U	70 U	0.5 U		
Shallow	BW 68-01	11/5/2008	GW	0.2 U	0.8 U	0.8 U	1 U	1 U	0.8 U	0.8 U	1 U	0.8 U	1 U	70 U	0.5 U	Abandon: below SLs for 3 years (2008-2010)	30
Shallow	BW 68-01	8/6/2009	GW	0.2 U	0.8 U	0.8 U	1 U	1 U	0.8 U	0.8 U	1 U	0.8 U	1 U	70 U	0.5 U		
Shallow	BW 68-01	3/26/2010	GW	0.39 J	0.8 U	0.8 U	1 U	1 U	0.8 U	0.8 U	1 U	0.8 U	1 U	70 U	0.5 U		
Shallow	BW 73-01S	6/30/2005	GW	31.6	0.8 U	0.8 U	2 J	1 U	2 J	0.8 U	1 U	0.8 U	1 U		0.5 U		
Shallow	BW 73-01S	8/12/2009	GW		0.8 U	0.8 U	1 U	1 U	0.8 U	0.8 U	1 U	0.8 U	1 U	70 U	0.5 U		
Shallow	BW 73-01S	3/18/2010	GW		0.8 U	0.8 U	1 U	1 U	0.8 U	0.8 U	1 U	0.8 U	1 U	70 U	0.5 U		
Shallow	BW 73-01S	9/14/2011	GW	8.2												Abandon: below SLs for >3 years	9
Shallow	BW 73-01S	5/14/2012	GW	5.4													
Shallow	BW 73-01S	5/30/2013	GW	1.5 j	0.8 U	0.8 U	1 U	1 U	0.8 U	0.8 U	1 U	0.8 U	1 U		0.5 U		
Shallow	BW 73-01S	5/30/2013	GW	2.8	0.8 U	0.8 U	1 U	1 U	0.8 U	0.8 U	1 U	0.8 U	1 U		0.5 U		
Shallow	BW 73-01S	5/17/2014	GW	1 U													
Shallow	BW 100-02S	5/18/2005	GW	2 J	29	0.8 U	7	1 U	0.8 U	0.8 U	1 U	0.8 U	1 U		0.5 U		
Shallow	BW 100-02S	9/14/2011	GW	0.2 U	0.8 U	0.8 U	1 U	1 U	0.8 U	0.8 U	1 U	0.8 U	1 U		0.5 U	Abandon: Below SLs for >3 years	6
Shallow	BW 100-02S	5/4/2012	GW	0.31 J	0.8 U	0.8 U	1 U	1 U	0.8 U	0.8 U	1 U	0.8 U	1 U		0.5 U		
Shallow	BW 100-02S	5/24/2013	GW	1 U	0.8 U	0.8 U	1 U	1 U	0.8 U	0.8 U	1 U	0.8 U	1 U		0.5 U		
Shallow	BW 100-02S	5/17/2014	GW	1 U	0.5 U	0.5 U	0.5 U	0.5 U	0.5 U	0.5 U	0.5 U	0.5 U	0.5 U		0.5 U		
Shallow	SW 35-01S	5/5/2004	GW	309	0.8 U	0.8 U	1 U	1 U	0.8 U	9 J	1 U	0.8 U	1 U		0.5 U		
Shallow	SW 35-01S	3/1/2005	GW	0.7 U	0.8 U	0.8 U	1 U	1 U	0.8 U	0.8 U	1 U	0.8 U	1 U		0.5 U	Abandon: below SLs for >3 years	6
Shallow	SW 35-01S	9/15/2011	GW	0.28 J	0.8 U	0.8 U	1 U	1 U	0.8 U	0.8 U	1 U	0.8 U	1 U		0.5 U		
Shallow	SW 35-01S	5/28/2013	GW	1 U	0.8 U	0.8 U	1 U	1 U	0.8 U	0.8 U	1 U	0.8 U	1 U		0.5 U		
Shallow	SW 40-06	5/19/2002	GW		1 U	1 U	1 U	1 U	1.2	191	6.6	8.2	1 U				
Shallow	SW 40-06	11/5/2002	GW		1 U	1 U	1 U	1 U	1 U	53.8	2.4	3.2	1 U				
Shallow	SW 40-06	5/20/2003	GW	9.4	1 U	1 U	1 U	1 U	1 U	138	13	16.7	1 U				
Shallow	SW 40-06	5/4/2004	GW	2.6 J	0.8 U	0.8 U	1 U	1 U	0.8 U	76	19	14	1 U		0.5 U		
Shallow	SW 40-06	5/4/2004	GW	6.2	0.8 U	0.8 U	1 U	1 U	0.8 U	83	15	13	1 U		0.5 U		
Shallow	SW 40-06	8/31/2004	GW	53.4	0.8 U	0.8 U	1 U	1 U	0.8 J	290	16	22	1 U		0.5 U		
Shallow	SW 40-06	11/3/2004	GW	9.2	11	0.8 U	1 U	1 U	0.8 U	120	15	13	1 J		0.5 U		
Shallow	SW 40-06	3/4/2005	GW	2.1 J	0.8 U	0.8 U	1 U	1 U	0.8 U	3 J	1 J	0.8 U	1 U		0.5 U	Abandon: below SLs for 3 years	7
Shallow	SW 40-06	5/17/2006	GW	1.6	5 J	0.8 U	1 U	1 U	0.8 U	5	1 U	0.8 U	1 U		0.5 U		
Shallow	SW 40-06	2/15/2007	GW	21	0.8 U	0.8 U	1 U	1 U	0.8 U	23	2 J	2 J	1 U		0.5 U		
Shallow	SW 40-06	2/15/2007	GW	24	0.8 U	0.8 U	1 U	1 U	0.8 U	47	3 J	4 J	1 U		0.5 U		
Shallow	SW 40-06	8/4/2009	GW	0.64 J	0.8 U	0.8 U	1 U	1 U	0.8 U	6	1 U	0.8 U	1 U	70 U	0.5 U		
Shallow	SW 40-06	3/29/2010	GW	4.9	0.8 U	0.8 U	1 U	1 U	1 J	6	1 J	1 J	1 U	70 U	0.5 U		
Shallow	SW 40-06	9/9/2011	GW	1.8	0.8 U	0.8 U	1 U	1 U	0.8 U	3 J	1 U	0.8 U	1 U		0.5 U		
Shallow	SW 40-06	5/30/2013	GW	1.6	0.8 U	0.8 U	1 U	1 U	0.8 U	3 J	1 U	0.8 U	1 U		0.5 U		
Shallow	SW 40-06	5/15/2014	GW		0.5 U	0.5 U	0.5 U	0.5 U	0.5 U	2	1	2	0.5 U		0.5 U		

Table 3 - Shallow Groundwater Historical Results and Well Abandonment Rationale
Excluding Wells in Project Cub Area

Aquifer	Location	Date Sampled	Matrix	Perchlorate µg/L	111TCA µg/L	112TCA µg/L	11DCA µg/L	12DCA µg/L	11DCE µg/L	PCE µg/L	TCE µg/L	cis-12DCE µg/L	VC µg/L	14Dioxane µg/L	Benzene µg/L	Rationale	Sample Depth
Screening Levels (SLs):				**15**	**200**	**5**	**140**	**5**	**7**	**5**	**5**	**70**	**2**	**7.8**	**5**		(ft)
Shallow	SW 40-51	5/19/2002	GW		12.7	1 U	2.2	1 U	50.4	23.5	1.9	3.1	1 U			Abandon: below SLs for >3 years	7
Shallow	SW 40-51	11/6/2002	GW		1 U	1 U	1 U	1 U	1 U	1 U	1 U	1 U	1 U				
Shallow	SW 40-51	5/20/2003	GW	175	1 U	1 U	1 U	1 U	1 U	1 U	1 U	1 U	1 U				
Shallow	SW 40-51	5/20/2003	GW		1 U	1 U	1 U	1 U	1.4	1.2	1 U	1 U	1 U				
Shallow	SW 40-51	1/22/2004	GW		1 U	1 U	1.1	1 U	2.2	1.7	1 U	1 U	1 U				
Shallow	SW 40-51	5/11/2004	GW	4410	11	0.8 U	3 J	1 U	40	36	2 J	5	1 U		0.5 U		
Shallow	SW 40-51	8/24/2004	GW	3980	8	0.8 U	3 J	1 U	30	36	5 J	5	1 U		0.5 U		
Shallow	SW 40-51	11/10/2004	GW	3390	7	0.8 U	3 J	1 U	29	34	5 J	4 J	1 U		0.5 U		
Shallow	SW 40-51	3/4/2005	GW	13.9	0.8 U	0.8 U	1 U	1 U	0.8 U	1 J	1 U	0.8 U	1 U		0.5 U		
Shallow	SW 40-51	5/12/2005	GW	3010	6	0.8 U	2 J	1 U	22	29	2 J	3 J	1 U		0.5 U		
Shallow	SW 40-51	8/16/2005	GW	2500	6	0.8 U	3 J	1 U	26	28	4 J	3 J	1 U		0.5 U		
Shallow	SW 40-51	11/28/2005	GW	170	0.8 U	0.8 U	1 U	1 U	2 J	3 J	1 U	0.8 U	1 U		0.5 U		
Shallow	SW 40-51	5/17/2006	GW	2300	8	0.8 U	2 J	1 U	28	29	2 J	3 J	1 U		0.5 U		
Shallow	SW 40-51	2/14/2007	GW	1000	5 J	0.8 U	1 U	1 U	16	13	1 U	1 J	1 U		0.5 U	Abandon: below SLs for >3 years (cont.)	7 (cont.)
Shallow	SW 40-51	10/2/2007	GW	570	3 J	0.8 U	2 J	1 U	17	9	7	2 J	1 U		0.5 U		
Shallow	SW 40-51	5/29/2008	GW	89 J	5 UJ	5 UJ	5 UJ	5 UJ	1.4 J	1.5 J	5 UJ	5 UJ	5 UJ		5 UJ		
Shallow	SW 40-51	8/4/2009	GW	15	0.8 U	0.8 U	1 J	1 U	8	1 J	6	0.8 U	1 U	70 U	0.5 U		
Shallow	SW 40-51	3/17/2010	GW	3.8	0.8 U	0.8 U	1 U	1 U	0.8 U	0.8 U	1 U	0.8 U	1 U	70 U	0.5 U		
Shallow	SW 40-51	9/14/2011	GW	0.2 U	0.8 U	0.8 U	1 U	1 U	0.8 U	0.8 U	1 U	0.8 U	1 U		0.5 U		
Shallow	SW 40-51	5/16/2012	GW		0.8 U	0.8 U	1 U	1 U	5 J	4 J	3 J	0.8 U	1 U		0.5 U		
Shallow	SW 40-51	5/31/2013	GW	6	0.8 U	0.8 U	1 U	1 U	0.8 U	0.8 U	1 U	0.8 U	1 U		0.5 U		
Shallow	SW 40-51	5/19/2014	GW		10 U	10 U	10 U	10 U	10 U	10 U	10 U	10 U	10 U		10 U		
Shallow	SW 47-05	11/28/2005	GW	0.97 J	2 J	0.8 U	1 U	1 U	0.8 U	3 J	2 J	0.8 U	1 U		0.5 U	Abandon: below SLs for >3 years	5
Shallow	SW 47-05	10/2/2007	GW	0.2 U	0.8 U	0.8 U	1 U	1 U	0.8 U	0.8 U	1 U	0.8 U	1 U		0.5 U		
Shallow	SW 47-05	6/6/2008	GW	1 U	5 UJ	5 UJ	5 UJ	5 UJ	5 UJ	5 UJ	5 UJ	5 UJ	5 UJ		5 UJ		
Shallow	SW 47-05	8/13/2009	GW	0.2 U	0.8 U	0.8 U	1 U	1 U	0.8 U	0.8 U	1 U	0.8 U	1 U	70 U	0.5 U		
Shallow	SW 47-05	4/1/2010	GW	2 U	0.8 U	0.8 U	1 U	1 U	0.8 U	0.8 U	1 U	0.8 U	1 U	70 U	0.5 U		
Shallow	SW 47-05	5/31/2013	GW	1 U	0.8 U	0.8 U	2 J	1 U	0.8 U	0.8 U	3 J	0.8 U	1 U		0.5 U		
Shallow	SW 152-01	5/20/2003	GW	10.1	1 U	1 U	1 U	1 U	1 U	1 U	1 U	1 U	1 U			Abandon: below SLs for >3 years	6
Shallow	SW 152-01	5/20/2003	GW	8.65													
Shallow	SW 152-01	5/13/2004	GW	4.8	0.8 U	0.8 U	1 U	1 U	0.8 U	0.8 U	1 U	0.8 U	1 U		0.5 U		
Shallow	SW 152-01	10/2/2007	GW	0.6 J	0.8 U	0.8 U	1 U	1 U	0.8 U	0.8 U	1 U	0.8 U	1 U		0.5 U		
Shallow	SW 152-01	8/13/2009	GW	2 U	0.8 U	0.8 U	1 U	1 U	0.8 U	0.8 U	1 U	0.8 U	1 U	70 U	0.5 U		
Shallow	SW 152-01	3/19/2010	GW	0.2 U	0.8 U	0.8 U	1 U	1 U	0.8 U	0.8 U	1 U	0.8 U	1 U	70 U	0.5 U		
Shallow	SW CM-05	2/3/2004	GW		1 U	1 U	1 U	1 U	1 U	1 U	1 U	1 U	1 U			Abandon: below SLs for >3 years	6
Shallow	SW CM-05	5/5/2004	GW	2.6 J													
Shallow	SW CM-05	9/13/2011	GW	0.3 J	0.8 U	0.8 U	1 U	1 U	0.8 U	0.8 U	1 U	0.8 U	1 U		0.5 U		
Shallow	SW CM-05	4/4/2012	GW		1 J	0.8 U	1 U	1 U	0.8 U	0.8 U	1 U	0.8 U	1 U		0.5 U		
Shallow	SW CM-05	5/15/2014	GW	1 U	0.5 U	0.5 U	0.5 U	0.5 U	0.5 U	0.5 U	0.5 U	0.5 U	0.5 U		0.5 U		
Shallow	SW PBS-01	11/4/2002	GW		1 U	1 U	1 U	1 U	1 U	1 U	1 U	1.9	1 U			Abandon: below SLs (ND) for >3 years; not sampled since 2014	5
Shallow	SW PBS-01	11/4/2002	GW		1 U	1 U	1 U	1 U	1 U	1 U	1 U	1.7	1 U				
Shallow	SW PBS-01	5/20/2003	GW	2 U	1 U	1 U	1 U	1 U	1 U	1 U	1 U	1 U	1 U				
Shallow	SW PBS-01	5/20/2003	GW	6.04													
Shallow	SW PBS-01	5/11/2004	GW	2.6 U	0.8 U	0.8 U	1 U	1 U	0.8 U	0.8 U	1 U	0.8 U	1 U		0.5 U		
Shallow	SW PBS-01	8/13/2009	GW	0.2 U	0.8 U	0.8 U	1 U	1 U	0.8 U	0.8 U	1 U	0.8 U	1 U	70 U	0.5 U		
Shallow	SW PBS-01	3/16/2010	GW	0.2 U	0.8 U	0.8 U	1 U	1 U	0.8 U	0.8 U	1 U	0.8 U	1 U	70 U	0.5 U		
Shallow	SW PBS-01	8/31/2011	GW	0.2 U	0.8 U	0.8 U	1 U	1 U	0.8 U	0.8 U	1 U	0.8 U	1 U	0.26 J	0.5 U		
Shallow	SW PBS-01	8/31/2011	GW	0.2 U	0.8 U	0.8 U	1 U	1 U	0.8 U	0.8 U	1 U	0.8 U	1 U		0.5 U		
Shallow	SW PBS-01	5/2/2012	GW	0.2 U	0.8 U	0.8 U	1 U	1 U	0.8 U	0.8 U	1 U	0.8 U	1 U		0.5 U		
Shallow	SW PBS-01	5/21/2013	GW	1 U	0.8 U	0.8 U	1 U	1 U	0.8 U	0.8 U	1 U	0.8 U	1 U		0.5 U		
Shallow	SW PBS-01	11/19/2013	GW	0.2 U	0.8 U	0.8 U	1 U	1 U	0.8 U	0.8 U	1 U	0.8 U	1 U	70 U	0.5 U		
Shallow	SW PBS-01	5/13/2014	GW	1 U	0.5 U	0.5 U	0.5 U	0.5 U	0.5 U	0.5 U	0.5 U	0.5 U	0.5 U		0.5 U		

Table 3 - Shallow Groundwater Historical Results and Well Abandonment Rationale
Excluding Wells in Project Cub Area

Aquifer	Location	Date Sampled	Matrix	Perchlorate µg/L	111TCA µg/L	112TCA µg/L	11DCA µg/L	12DCA µg/L	11DCE µg/L	PCE µg/L	TCE µg/L	cis-12DCE µg/L	VC µg/L	14Dioxane µg/L	Benzene µg/L	Rationale	Sample Depth
Screening Levels (SLs):				**15**	**200**	**5**	**140**	**5**	**7**	**5**	**5**	**70**	**2**	**7.8**	**5**		(ft)
Shallow	SW SB-01	8/12/2009	GW	2 U	0.8 U	0.8 U	1 U	1 U	0.8 U	0.8 U	1 U	0.8 U	1 U	70 U	0.5 U		
Shallow	SW SB-01	3/24/2010	GW	0.2 U	0.8 U	0.8 U	1 U	1 U	0.8 U	0.8 U	1 U	0.8 U	1 U	70 U	0.5 U		
Shallow	SW SB-01	8/31/2011	GW	0.2 U	0.8 U	0.8 U	1 U	1 U	0.8 U	0.8 U	1 U	0.8 U	1 U	0.049 UJ	0.5 U		
Shallow	SW SB-01	5/7/2012	GW	0.2 U	0.8 U	0.8 U	1 U	1 U	0.8 U	0.8 U	1 U	0.8 U	1 U		0.5 U		
Shallow	SW SB-01	5/21/2013	GW	1 U	0.8 U	0.8 U	1 U	1 U	0.8 U	0.8 U	1 U	0.8 U	1 U		0.5 U		
Shallow	SW SB-01	11/19/2013	GW	0.2 U	0.8 U	0.8 U	1 U	1 U	0.8 U	0.8 U	1 U	0.8 U	1 U	70 U	0.5 U	Abandon: below SLs (ND) for >3 years; appears to be west of migration pathway	11
Shallow	SW SB-01	5/13/2014	GW	1 U	0.5 U	0.5 U	0.5 U	0.5 U	0.5 U	0.5 U	0.5 U	0.5 U	0.5 U		0.5 U		
Shallow	SW SB-01	5/13/2015	GW	0.2 U	0.5 U	0.5 U	0.5 U	0.5 U	0.5 U	0.5 U	0.5 U	0.5 U	0.5 U		0.5 U		
Shallow	SW SB-01	11/6/2015	GW	0.2 U	0.5 U	0.5 U	0.5 U	0.5 U	0.5 U	0.5 U	0.5 U	0.5 U	0.5 U		0.5 U		
Shallow	SW SB-01	3/30/2016	GW	0.2 U	0.5 U	0.5 U	0.5 U	0.5 U	0.5 U	0.5 U	0.5 U	0.5 U	0.5 U		0.5 U		
Shallow	SW SB-01	10/26/2016	GW	0.2 U	0.5 U	0.5 U	0.5 U	0.5 U	0.5 U	0.5 U	0.5 U	0.5 U	0.5 U		0.5 U		
Shallow	SW SB-01	4/18/2017	GW	0.2 U	0.5 U	0.5 U	0.5 U	0.5 U	0.5 U	0.5 U	0.5 U	0.5 U	0.5 U		0.5 U		
Shallow	SW SB-02	8/12/2009	GW	2 U	0.8 U	0.8 U	1 U	1 U	0.8 U	0.8 U	1 U	0.8 U	1 U	70 U	0.5 U		
Shallow	SW SB-02	3/24/2010	GW	0.71 J	0.8 U	0.8 U	1 U	1 U	0.8 U	0.8 U	1 U	0.8 U	1 U	70 U	0.5 U		
Shallow	SW SB-02	9/1/2011	GW	0.58 J	0.8 U	0.8 U	1 U	1 U	0.8 U	0.8 U	1 U	0.8 U	1 U	0.05 UJ	0.5 U		
Shallow	SW SB-02	5/2/2012	GW	0.73 J	0.8 U	0.8 U	1 U	1 U	0.8 U	0.8 U	1 U	0.8 U	1 U		0.5 U		
Shallow	SW SB-02	5/21/2013	GW	1 U	0.8 U	0.8 U	1 U	1 U	0.8 U	0.8 U	1 U	0.8 U	1 U	0.053 U	0.5 U		
Shallow	SW SB-02	11/20/2013	GW	0.45 J	0.8 U	0.8 U	1 U	1 U	0.8 U	0.8 U	1 U	0.8 U	1 U	70 U	0.5 U	Abandon: below SLs for >3 years; appears to be west of migration pathway	11
Shallow	SW SB-02	5/13/2014	GW	1 U	0.5 U	0.5 U	0.5 U	0.5 U	0.5 U	0.5 U	0.5 U	0.5 U	0.5 U		0.5 U		
Shallow	SW SB-02	5/13/2015	GW	0.2 U	0.5 U	0.5 U	0.5 U	0.5 U	0.5 U	0.5 U	0.5 U	0.5 U	0.5 U		0.5 U		
Shallow	SW SB-02	11/6/2015	GW	0.36 J	0.5 U	0.5 U	0.5 U	0.5 U	0.5 U	0.5 U	0.5 U	0.5 U	0.5 U		0.5 U		
Shallow	SW SB-02	3/29/2016	GW	0.29 J	0.5 U	0.5 U	0.5 U	0.5 U	0.5 U	0.5 U	0.5 U	0.5 U	0.5 U		0.5 U		
Shallow	SW SB-02	10/26/2016	GW	0.47 J	0.5 U	0.5 U	0.5 U	0.5 U	0.5 U	0.5 U	0.5 U	0.5 U	0.5 U		0.5 U		
Shallow	SW SB-02	4/18/2017	GW	0.37 J	0.5 U	0.5 U	0.5 U	0.5 U	0.5 U	0.5 U	0.5 U	0.5 U	0.5 U		0.5 U		
Shallow	SW TTU-05	8/17/2006	GW	2.5	110	0.8 U	4 J	1 U	37	84	10		1 U		0.5 U		
Shallow	SW TTU-05	11/16/2006	GW	0.7 J	63	0.8 U	3 J	1 U	24	47	8		1 U		0.5 U		
Shallow	SW TTU-05	5/14/2008	GW	0.98 J	28 J	5 UJ	5 UJ	5 UJ	9.6 J	24 J	2.6 J	2.3 J	5 UJ		5 UJ		
Shallow	SW TTU-05	8/11/2008	GW	1.4	44	0.8 U	2 J	1 U	16	38	5 J	4 J	1 U	70 U	0.5 U		
Shallow	SW TTU-05	3/31/2010	GW	0.29 J	6	0.8 U	1 U	1 U	3 J	5 J	1 U	0.8 U	1 U	70 U	0.5 U		
Shallow	SW TTU-05	11/9/2010	GW	0.2 U	0.8 U	0.8 U	1 U	1 U	0.8 U	0.8 U	1 U	0.8 U	1 U	70 U	0.5 U		
Shallow	SW TTU-05	6/14/2011	GW	1.2	71	0.8 U	5 J	1 U	40	81	7	6	1 U	70 U	0.5 U	Abandon: Part of TTU monitoring that was transferred from VA DEQ to USEPA in 2012; below SLs for >3 years	7
Shallow	SW TTU-05	10/4/2011	GW	0.2 U													
Shallow	SW TTU-05	12/14/2011	GW	0.22 J	0.8 U	0.8 U	1 U	1 U	1 J	0.8 U	1 U	0.8 U	1 U		0.5 U		
Shallow	SW TTU-05	5/10/2012	GW	1.1	0.8 U	0.8 U	1 U	1 U	0.8 U	0.8 U	1 U	0.8 U	1 U		0.5 U		
Shallow	SW TTU-05	11/8/2012	GW	1.5	0.8 U	0.8 U	1 U	1 U	0.8 U	0.8 U	1 U	0.8 U	1 U		0.5 U		
Shallow	SW TTU-05	5/28/2013	GW	2.1	0.8 U	0.8 U	1 U	1 U	0.8 U	0.8 U	1 U	0.8 U	1 U		0.5 U		
Shallow	SW TTU-05	5/15/2014	GW	1 U													
Shallow	SW TTU-05	11/12/2014	GW	1 U	0.5 U	0.5 U	0.5 U	0.5 U	0.5 U	0.5 U	0.5 U	0.5 U	0.5 U		0.5 U		

Table 3 - Shallow Groundwater Historical Results and Well Abandonment Rationale
Excluding Wells in Project Cub Area

Aquifer	Location	Date Sampled	Matrix	Perchlorate µg/L	111TCA µg/L	112TCA µg/L	11DCA µg/L	12DCA µg/L	11DCE µg/L	PCE µg/L	TCE µg/L	cis-12DCE µg/L	VC µg/L	14Dioxane µg/L	Benzene µg/L	Rationale	Sample Depth
Screening Levels (SLs):				**15**	**200**	**5**	**140**	**5**	**7**	**5**	**5**	**70**	**2**	**7.8**	**5**		(ft)
Shallow	BW 5-05S	11/8/2004	GW	355	9300	8 U	41 J	10 U	220	29 J	10 U	8 U	10 U		5 U	Abandon: exceeded SLs for perchlorate, PCE, TCE, 111TCA, and 11DCE when last sampled; redundant with nearby SW 5-04 (16 ft) and downgradient monitoring of perchlorate and VOC detections of same COCs at BW 28-02S (17 ft) and BW 28-04D (21 ft)	10
Shallow	BW 5-05S	12/21/2004	GW	379													
Shallow	BW 5-05S	2/24/2005	GW	531	6900	3 J	65	1 U	270	23	12	1 J	1 U		0.5 U		
Shallow	BW 5-05S	5/8/2006	GW		5200	2 J	51	1 J	82	60	12	6	1 U		0.5 U		
Shallow	BW 5-05S	11/16/2006	GW		3500	2 J	34	1 J	95	65	11	6	1 U		0.5 U		
Shallow	BW 5-05S	10/2/2007	GW	2200	5500	2 J	30	2 J	130	130	13	7	1 U		0.5 U		
Shallow	BW 5-05S	5/22/2008	GW	520	5600 J	1000 UJ	1000 UJ	1000 UJ	1000 UJ	1000 UJ	1000 UJ	1000 UJ	1000 UJ		1000 UJ		
Shallow	BW 5-05S	8/3/2009	GW	740	2300	1 J	39	1 U	94 J	140	17	12	1 U	70 U	0.5 U		
Shallow	BW 5-05S	8/3/2009	GW	750	1800	2 U	32	3 U	65 J	110	13	10 J	3 U	180 U	1 U		
Shallow	BW 5-05S	3/29/2010	GW	520	2900	1 J	63	1 J	110	150	20	12	1 U	70 U	0.5 U		
Shallow	BW 5-05S	11/11/2010	GW		2800	1 J	28	1 U	100	120	16	11	1 U	70 U	0.5 U		
Shallow	BW 5-05S	9/7/2011	GW	250	1 J	0.8 U	1 U	1 U	1 J	170	21	15	1 U	2 J	0.5 U		
Shallow	BW 5-05S	12/12/2011	GW		2600	4 U	22 J	5 U	78	94	12 J	7 J	5 U		3 U		
Shallow	BW 5-05S	4/2/2012	GW	18	90	0.8 U	36	1 U	39	0.9 J	1 U	0.8 U	1 U		0.5 U		
Shallow	BW 5-05S	11/8/2012	GW		140	0.8 U	69	1 U	100	2 J	1 U	0.8 U	1 U		0.5 U		
Shallow	BW 5-05S	5/29/2013	GW	310	2 J	0.8 U	1 U	1 U	1 J	190	24	14	1 U	2.2	0.5 U		
Shallow	BW 5-05S	11/20/2013	GW	25	140	0.8 U	88	1 U	49	3 J	1 U	0.8 U	1 U	70 U	0.5 U		
Shallow	BW 5-05S	5/17/2014	GW		0.5 U	0.5 U	0.6 J	0.5 U	0.9 J	160	21	12	0.5 U		0.5 U		
Shallow	BW 5-05S	5/17/2014	GW		1	0.5 U	0.5 J	0.5 U	0.9 J	160	21	12	0.5 U		0.5 U		
Shallow	BW 5-05S	11/11/2014	GW		6900	3 U	33	3 U	290	91	18	8	3 U		3 U		
Shallow	BW 5-06D	11/8/2004	GW	495	2 J	0.8 U	1 U	1 U	1 J	15	1 J	1 J	1 U		0.5 U	Abandon: exceeded SLs for perchlorate, PCE, and TCE, when last sampled in 2014; redundant with nearby SW 5-04 (16 ft) and downgradient perchlorate and VOC detections at BW 28-02S (17 ft), BW 28-04D (21 ft)	16
Shallow	BW 5-06D	12/21/2004	GW	619													
Shallow	BW 5-06D	2/24/2005	GW	1470	5	0.8 U	1 U	1 U	1 J	35	5 J	4 J	1 U		0.5 U		
Shallow	BW 5-06D	5/8/2006	GW	2700													
Shallow	BW 5-06D	11/11/2010	GW		3 J	0.8 U	1 U	1 U	1 J	110	14	11	1 U	70 U	0.5 U		
Shallow	BW 5-06D	9/7/2011	GW	500	2 J	0.8 U	1 U	1 U	1 J	100	12	9	1 U		0.5 U		
Shallow	BW 5-06D	12/12/2011	GW	520	3 U	0.8 U	1 U	1 U	2 J	130	14	10	1 U		0.5 U		
Shallow	BW 5-06D	4/2/2012	GW	300	1 J	0.8 U	1 U	1 U	2 J	69	7	5	1 U		0.5 U		
Shallow	BW 5-06D	11/8/2012	GW		5	0.8 U	1 U	1 U	2 J	150	16	11	1 U		0.5 U		
Shallow	BW 5-06D	5/29/2013	GW	470	4 J	0.8 U	1 U	1 U	1 J	150	15	10	1 U	2.6	0.5 U		
Shallow	BW 5-06D	11/20/2013	GW	410	4 J	0.8 U	1 U	1 U	2 J	140	14	8	1 U	70 U	0.5 U		
Shallow	BW 5-06D	5/17/2014	GW	440	2	0.5 U	0.5 J	0.5 U	2	130	16	10	0.5 U	2.8	0.5 U		
Shallow	BW 5-06D	11/11/2014	GW	440	2	0.5 U	0.5 U	0.5 U	1	120	15	9	0.5 U		0.5 U		
Shallow	BW 16-04D	11/9/2004	GW	4450	26	0.8 U	5	1 U	21	100	14	11	1 U		0.5 U	Abandon: exceeds SLs for perchlorate, PCE, TCE, and 11DCE, ; redundant with downgradient perchlorate, PCE, TCE, and 11DCE detections at BW 28-02S (17 ft), BW 28-04D (21 ft), SW 40-07A (11 ft), and SW 40-57 (12 ft)	18
Shallow	BW 16-04D	3/3/2005	GW	5130	27	0.8 U	4 J	1 U	16	100	13	10	1 U		0.5 U		
Shallow	BW 16-04D	5/17/2005	GW	5270	21	0.8 U	4 J	1 U	13	90	11	9	1 U		0.5 U		
Shallow	BW 16-04D	5/9/2006	GW	6900	19	0.8 U	3 J	1 U	14	110	10	9	1 U		0.5 U		
Shallow	BW 16-04D	7/29/2009	GW	5900	23	0.8 U	4 J	1 U	19	190	13	14	1 U	70 U	0.5 U		
Shallow	BW 16-04D	3/19/2010	GW	8900	22	0.8 U	4 J	1 U	18	180	12	13	1 U	70 U	0.5 U		
Shallow	BW 16-04D	11/10/2010	GW	5200													
Shallow	BW 16-04D	9/12/2011	GW	14000	20	0.8 U	3 J	1 U	13	200	17	16	1 U		0.5 U		
Shallow	BW 16-04D	5/4/2012	GW	4300	24	0.8 U	3 J	1 U	13	230	17	18	1 U		0.5 U		
Shallow	BW 16-04D	11/8/2012	GW	4400	21	0.8 U	3 J	1 U	13	220	16	17	1 U		0.5 U		
Shallow	BW 16-04D	11/8/2012	GW	4000	22	0.8 U	3 J	1 U	13	220	16	17	1 U		0.5 U		
Shallow	BW 16-04D	5/30/2013	GW	3100	26	0.8 U	3 J	1 U	13	220	16	16	1 U		0.5 U		
Shallow	BW 16-04D	11/21/2013	GW	4000	19	0.8 U	3 J	1 U	11	190	12	13	1 U	70 U	0.5 U		
Shallow	BW 16-04D	11/21/2013	GW	3500	18	0.8 U	3 J	1 U	11	190	12	13	1 U	70 U	0.5 U		
Shallow	BW 16-04D	5/17/2014	GW	3000	18	0.5 U	3	0.5 U	12	180	14	17	0.5 U		0.5 U		
Shallow	BW 16-04D	5/14/2015	GW	3500	19	0.5 U	3	0.5 U	12	180	13	16	0.5 U		0.5 U		
Shallow	BW 16-04D	3/31/2016	GW	3300	15	0.5 U	2	0.5 U	11	170	12	14	0.5 U		0.5 U		
Shallow	BW 16-04D	4/19/2017	GW	3100	13	0.5 U	2	0.5 U	8	150	12	12	0.5 U		0.5 U		

Table 3 - Shallow Groundwater Historical Results and Well Abandonment Rationale
Excluding Wells in Project Cub Area

Aquifer	Location	Date Sampled	Matrix	Perchlorate µg/L	111TCA µg/L	112TCA µg/L	11DCA µg/L	12DCA µg/L	11DCE µg/L	PCE µg/L	TCE µg/L	cis-12DCE µg/L	VC µg/L	14Dioxane µg/L	Benzene µg/L	Rationale	Sample Depth
Screening Levels (SLs):				**15**	**200**	**5**	**140**	**5**	**7**	**5**	**5**	**70**	**2**	**7.8**	**5**		(ft)
Shallow	BW 31-01S	11/21/2005	GW	350	1 J	0.8 U	1 J	1 U	1 J	160	33	42	1 U		0.5 U	Abandon: exceeds SLs for PCE and TCE, with decreasing trends; located at periphery of plume; bounded by stream and surface water to west; higher VOC concentrations to south-southeast in downflow direction	5
Shallow	BW 31-01S	5/10/2006	GW	210	0.8 U	0.8 U	1 U	1 U	0.9 J	100	31	38	1 U		0.5 U		
Shallow	BW 31-01S	9/6/2011	GW	15	0.8 U	0.8 U	1 J	1 U	0.8 U	110	47	33	1 U		0.5 U		
Shallow	BW 31-01S	5/1/2012	GW		0.8 U	0.8 U	1 J	1 U	0.8 U	120	48	31	1 U		0.5 U		
Shallow	BW 31-01S	5/30/2013	GW	20	0.8 U	0.8 U	1 U	1 U	0.8 U	140	47	23	1 U	0.7	0.5 U		
Shallow	BW 31-01S	5/17/2014	GW		0.5 U	0.5 U	0.6 J	0.5 U	0.5 U	110	43	17	0.5 U		0.5 U		
Shallow	BW 31-01S	5/13/2015	GW	3.1	0.5 U	0.5 U	0.5 U	0.5 U	0.5 U	76	28	13	0.5 U		0.5 U		
Shallow	BW 31-01S	3/30/2016	GW	1.8	0.5 U	0.5 U	0.5 U	0.5 U	0.5 U	69	28	11	0.5 U		0.5 U		
Shallow	BW 31-01S	4/19/2017	GW	1.4	0.5 U	0.5 U	0.5 U	0.5 U	0.5 U	22	8	5	0.5 U		0.5 U		
Shallow	BW 34-01	8/19/2008	GW	8900	0.8 U	0.8 U	6	1 U	0.8 U	14	1 U	1 J	1 U	70 U	0.5 U	Abandon: exceeds SL for perchlorate only, which has decreasing trend, and is significantly lower since soil IMs in 2011; located at periphery of plume area; redundant with other TTU monitoring for perchlorate and VOCs within higher concentration areas to east	40
Shallow	BW 34-01	8/5/2009	GW	3300	2 J	0.8 U	5	1 U	0.8 U	13	1 U	0.9 J	1 U	70 U	0.5 U		
Shallow	BW 34-01	8/5/2009	GW	3500	2 J	0.8 U	5	1 U	0.8 U	13	1 U	0.8 J	1 U	70 U	0.5 U		
Shallow	BW 34-01	3/25/2010	GW	3200	0.8 U	0.8 U	4 J	1 U	0.8 U	7	1 U	0.8 U	1 U	70 U	0.5 U		
Shallow	BW 34-01	9/12/2011	GW	6400 J	0.8 U	0.8 U	4 J	1 U	0.8 U	9	1 U	0.8 U	1 U		0.5 U		
Shallow	BW 34-01	5/1/2012	GW	2100	0.8 U	0.8 U	5 J	1 U	0.8 U	12	1 U	0.8 U	1 U		0.5 U		
Shallow	BW 34-01	5/30/2013	GW	990	0.8 U	0.8 U	4 J	1 U	0.8 U	8	1 U	0.8 J	1 U		0.5 U		
Shallow	BW 34-01	5/13/2015	GW	110	0.5 U	0.5 U	1	0.5 U	0.5 U	4	2	0.9 J	0.5 U		0.5 U		
Shallow	BW 34-01	3/31/2016	GW	77	0.5 U	0.5 U	1 J	0.5 U	0.5 U	4	2	1	0.5 U		0.5 U		
Shallow	BW 34-01	4/19/2017	GW	66	0.5 U	0.5 U	0.6 J	0.5 U	0.5 U	4	1	0.7 J	0.5 U		0.5 U		
Shallow	BW 40-04	8/19/2008	GW	1100	1 J	0.8 U	2 J	1 U	5	410	250	63	1 U	70 U	0.5 U	Abandon: below SLs in 2014; decreased below SLs for perchlorate in 2009, for PCE and TCE in 2013, and for cis12DCE in 2014; nearby SW 40-07A (11 ft) has generally similar decreasing trends for these COCs	40
Shallow	BW 40-04	7/31/2009	GW		0.8 U	0.8 U	2 J	1 U	7	490	260	77	1 U	70 U	0.5 U		
Shallow	BW 40-04	8/4/2009	GW	0.24 J													
Shallow	BW 40-04	3/25/2010	GW	0.2 U	3 J	0.8 U	2 J	1 U	3 J	92	43	130	1 U	70 U	0.5 U		
Shallow	BW 40-04	9/7/2011	GW	0.95 J	0.8 U	0.8 U	1 J	1 U	1 J	0.8 U	1 U	120	1 U		0.5 U		
Shallow	BW 40-04	12/13/2011	GW		0.8 U	0.8 U	1 J	1 U	2 J	28	2 J	110	1 U		0.5 U		
Shallow	BW 40-04	5/9/2012	GW		0.8 U	0.8 U	1 U	1 U	2 J	31	6	78	1 U		0.5 U		
Shallow	BW 40-04	5/28/2013	GW	1 U	0.8 U	0.8 U	1 U	1 U	3 J	0.8 U	1 U	230	1 U		0.5 U		
Shallow	BW 40-04	5/16/2014	GW		0.5 U	0.5 U	0.5 U	0.5 U	0.9 J	0.5 U	0.5 U	80	0.9 J		0.5 U		
Shallow	BW 40-04	11/12/2014	GW		0.5 Uuj	0.5 U	0.5 U	0.5 U	0.9 J	0.5 Uuj	0.5 U	47	1		0.5 U		
Shallow	BW 119-01	8/13/2008	GW	1100	0.8 U	0.8 U	1 U	1 U	0.8 U	0.8 U	1 U	0.8 U	1 U	70 U	0.5 U	Abandon: exceeds for perchlorate only, with decreasing trend; redundant with downgradient perchlorate detections at SW 40-57 (12 ft), SW 28-41 (8 ft), and sentinel wells	18
Shallow	BW 119-01	7/30/2009	GW	1700	0.8 U	0.8 U	1 U	1 U	1 J	0.8 U	1 U	0.8 U	1 U	70 U	0.5 U		
Shallow	BW 119-01	3/23/2010	GW	410	0.8 U	0.8 U	1 U	1 U	2 J	0.8 U	1 U	0.8 U	1 U	70 U	0.5 U		
Shallow	BW 119-01	8/30/2011	GW	930													
Shallow	BW 119-01	5/4/2012	GW	260													
Shallow	BW 119-01	5/23/2013	GW	140													
Shallow	BW 119-01	5/15/2014	GW	100													
Shallow	BW 119-01	5/13/2015	GW	160	0.5 U	0.5 U	5	0.5 U	1	0.5 U	0.5 U	0.5 U	0.7 J		0.5 U		
Shallow	BW 119-01	3/31/2016	GW	200	0.5 U	0.5 U	3	0.5 U	0.5 J	0.5 U	0.5 U	0.5 U	0.5 U		0.5 U		
Shallow	BW 119-01	4/19/2017	GW	22	0.5 U	0.5 U	0.5 U	0.5 U	0.5 U	0.5 U	0.5 U	0.5 U	0.5 U		0.5 U		

Table 3 - Shallow Groundwater Historical Results and Well Abandonment Rationale
Excluding Wells in Project Cub Area

Aquifer	Location	Date Sampled	Matrix	Perchlorate µg/L	111TCA µg/L	112TCA µg/L	11DCA µg/L	12DCA µg/L	11DCE µg/L	PCE µg/L	TCE µg/L	cis-12DCE µg/L	VC µg/L	14Dioxane µg/L	Benzene µg/L	Rationale	Sample Depth
Screening Levels (SLs):				**15**	**200**	**5**	**140**	**5**	**7**	**5**	**5**	**70**	**2**	**7.8**	**5**		(ft)
Shallow	BW TTU-05	5/8/2008	GW	2100	1.7 J	5 UJ	5 UJ	5 UJ	5 UJ	2.3 J	5 UJ	5 UJ	5 UJ		5 UJ	Abandon: Part of TTU monitoring that was transferred from VA DEQ to USEPA in 2012; BSL for perchlorate in 2017, with decreasing trend since 2012; BSL for VOCs since before TTU remediation in 2011; redundant with BW CG-01D which is downgradient with higher concentrations	23
Shallow	BW TTU-05	5/8/2008	GW	2200	1.7 J	5 UJ	5 UJ	5 UJ	5 UJ	2.2 J	5 UJ	5 UJ	5 UJ		5 UJ		
Shallow	BW TTU-05	8/8/2008	GW	3700 J	0.8 U	0.8 U	1 U	1 U	0.8 U	0.8 J	1 U	0.8 U	1 U	70 U	0.5 U		
Shallow	BW TTU-05	8/8/2008	GW	2100 J	0.8 U	0.8 U	1 U	1 U	0.8 U	0.8 J	1 U	0.8 U	1 U	70 U	0.5 U		
Shallow	BW TTU-05	3/31/2010	GW	2400	0.8 U	0.8 U	1 U	1 U	0.8 U	0.8 U	1 U	0.8 U	1 U	70 U	0.5 U		
Shallow	BW TTU-05	11/9/2010	GW	1800	0.8 U	0.8 U	1 U	1 U	0.8 U	0.8 U	1 U	0.8 U	1 U	70 U	0.5 U		
Shallow	BW TTU-05	11/9/2010	GW	1500	0.8 U	0.8 U	1 U	1 U	0.8 U	0.8 U	1 U	0.8 U	1 U	70 U	0.5 U		
Shallow	BW TTU-05	6/14/2011	GW	4700 J	0.8 U	0.8 U	1 U	1 U	0.8 U	0.8 U	1 U	0.8 U	1 U	70 U	0.5 U		
Shallow	BW TTU-05	6/14/2011	GW	2700 J	0.8 U	0.8 U	1 U	1 U	0.8 U	0.8 U	1 U	0.8 U	1 U	70 U	0.5 U		
Shallow	BW TTU-05	10/4/2011	GW	1200													
Shallow	BW TTU-05	12/14/2011	GW	460	0.8 U	0.8 U	1 U	1 U	0.8 U	0.8 U	1 U	0.8 U	1 U		0.5 U		
Shallow	BW TTU-05	12/14/2011	GW	490	0.8 U	0.8 U	1 U	1 U	0.8 U	0.8 U	1 U	0.8 U	1 U		0.5 U		
Shallow	BW TTU-05	5/7/2012	GW	4600	3 J	0.8 U	1 U	1 U	2 J	5 J	1 U	0.8 U	1 U		0.5 U		
Shallow	BW TTU-05	5/10/2012	GW	4700	3 J	0.8 U	1 U	1 U	2 J	5 J	1 U	0.8 U	1 U		0.5 U		
Shallow	BW TTU-05	11/8/2012	GW	8000	0.8 U	0.8 U	1 U	1 U	0.8 U	1 J	1 U	0.8 U	1 U		0.5 U		
Shallow	BW TTU-05	5/28/2013	GW	1500	0.8 U	0.8 U	1 U	1 U	0.8 U	0.9 J	1 U	0.8 U	1 U		0.5 U		
Shallow	BW TTU-05	5/28/2013	GW	1400	0.8 U	0.8 U	1 U	1 U	0.8 U	0.9 J	1 U	0.8 U	1 U		0.5 U		
Shallow	BW TTU-05	5/15/2014	GW	240													
Shallow	BW TTU-05	11/12/2014	GW	120	0.5 U	0.5 U	0.5 U	0.5 U	0.5 U	0.5 U	0.5 U	0.5 U	0.5 U		0.5 U		
Shallow	BW TTU-05	11/12/2014	GW	170	0.5 U	0.5 U	0.5 U	0.5 U	0.5 U	0.5 U	0.5 U	0.5 U	0.5 U		0.5 U		
Shallow	BW TTU-05	5/15/2015	GW	130	0.5 U	0.5 U	0.5 U	0.5 U	0.5 U	0.5 U	0.5 U	0.5 U	0.5 U		0.5 U		
Shallow	BW TTU-05	4/1/2016	GW	31	0.5 U	0.5 U	0.5 U	0.5 U	0.5 U	0.5 U	0.5 U	0.5 U	0.5 U		0.5 U		
Shallow	BW TTU-05	4/20/2017	GW	13	0.5 U	0.5 U	0.5 U	0.5 U	0.5 U	0.5 U	0.5 U	0.5 U	0.5 U		0.5 U		
Shallow	SW 15-02	2/5/2004	GW		2432	1 U	24.9	1 U	91.2	39.5	4.1 J	1.2 J	1 U			Abandon: exceeds SLs for perchlorate, 111TCA, 11DCE, PCE, TCE, and 1,4-dioxane; redundant with upgradient detections at SW 5-04 (16 ft), and downgradient detections of same COCs at BW28-02S (17 ft) and BW 28-04D (21 ft)	13
Shallow	SW 15-02	5/6/2004	GW	154	2200	2 U	29	3 U	90	33	4 J	2 U	3 U		1 U		
Shallow	SW 15-02	8/18/2004	GW	114	2500	2 U	30	3 U	92	25	4 J	2 U	3 U		1 U		
Shallow	SW 15-02	11/2/2004	GW	86.3	2000	2 U	39	2 U	120	32	4 J	2 U	2 U		1 U		
Shallow	SW 15-02	2/24/2005	GW	171	2400	0.9 J	51	1 U	230	30	6	1 J	1 U		0.5 U		
Shallow	SW 15-02	5/17/2005	GW		3000	0.8 J	48	1 J	100	28	6	2 J	1 U		0.5 U		
Shallow	SW 15-02	11/28/2005	GW		3000	4 U	47	5 U	130	28	6 J	4 U	5 U		3 U		
Shallow	SW 15-02	5/16/2006	GW		2600	2 U	38	3 U	110	30	6 J	2 J	3 U		1 U		
Shallow	SW 15-02	11/16/2006	GW		2600	0.9 J	56	1 J	170	37	7	4 J	1 U		0.5 U		
Shallow	SW 15-02	8/17/2009	GW	470	1600	2 U	25	2 U	74	54	7 J	4 J	2 U	140 U	1 U		
Shallow	SW 15-02	8/17/2009	GW	470	1600	2 U	25	2 U	75	57	7 J	4 J	2 U	140 U	1 U		
Shallow	SW 15-02	3/29/2010	GW	290	2100	4 U	28	5 U	87	52	8 J	4 U	5 U	350 U	3 U		
Shallow	SW 15-02	9/8/2011	GW	210	1500	0.8 U	24	1 U	93	60	9	4 J	1 U	20 J	0.5 U		
Shallow	SW 15-02	12/13/2011	GW		1400	2 U	28	3 U	110	42	7 J	3 J	3 U		1 U		
Shallow	SW 15-02	5/11/2012	GW	200	1700	2 U	21	2 U	120	55	8 J	4 J	2 U		1 U		
Shallow	SW 15-02	5/24/2013	GW	110	4500	1 J	110	2 J	400	63	14	5 J	1 U	18 j	0.5 U		
Shallow	SW 15-02	5/24/2013	GW	96	4400	4 U	97	5 U	370	51	12 J	4 U	5 U	0.05 U	3 U		
Shallow	SW 15-02	5/14/2014	GW	56	2400	3 U	57	3 U	150	39	7	3 U	3 U	14	3 U		
Shallow	SW 15-02	11/12/2014	GW		2200 j	0.5 U	54	0.7 J	170	50 j	10	4	0.5 U		0.5 U		
Shallow	SW 15-02	5/13/2015	GW	67	1500	1 U	44	1 J	81	36	8	3	1 U	17	1 U		
Shallow	SW 15-02	3/31/2016	GW	46	1600	1 U	36	1 U	98	38	7	3	1 U	13	1 U		
Shallow	SW 15-02	4/19/2017	GW	56	2300	1 U	65	1 U	410	41	9	3	1 U	7.3	1 U		

Table 3 - Shallow Groundwater Historical Results and Well Abandonment Rationale
Excluding Wells in Project Cub Area

Aquifer	Location	Date Sampled	Matrix	Perchlorate µg/L	111TCA µg/L	112TCA µg/L	11DCA µg/L	12DCA µg/L	11DCE µg/L	PCE µg/L	TCE µg/L	cis-12DCE µg/L	VC µg/L	14Dioxane µg/L	Benzene µg/L	Rationale	Sample Depth
Screening Levels (SLs):				**15**	**200**	**5**	**140**	**5**	**7**	**5**	**5**	**70**	**2**	**7.8**	**5**		(ft)
Shallow	SW 46-01	5/19/2002	GW		7.8	1 U	4	1 U	15.1	664	24.1	28	1 U				
Shallow	SW 46-01	9/5/2002	GW		5 U	5 U	4 J	5 U	14	690	23	30	5 U		5 U		
Shallow	SW 46-01	9/25/2002	GW		5 U	5 U	4 J	5 U	16	580 J	18	25	5 U		5 U		
Shallow	SW 46-01	10/10/2002	GW		5 U	5 U	4 J	5 U	14	670 J	16	22	5 U		5 U		
Shallow	SW 46-01	10/23/2002	GW		5 U	5 U	5 U	5 U	12	500 J	17	22	5 U		5 U		
Shallow	SW 46-01	11/5/2002	GW		5	1 U	3.1	1 U	9.9	1 U	16.6	17.6	1 U				
Shallow	SW 46-01	11/7/2002	GW		5 U	5 U	3 J	5 U	9	450	17	22	5 U		5 U		
Shallow	SW 46-01	11/20/2002	GW		4.2	1 U	2.7	1 U	9.5	448	18.2	1 U	1 U				
Shallow	SW 46-01	12/2/2002	GW		4.5	1 U	3	1 U	10.5	417	18.7	20.3	1 U				
Shallow	SW 46-01	3/5/2003	GW		3.8		2.3	1 U	10.9	437	14.6	19	1 U				
Shallow	SW 46-01	5/20/2003	GW	990	3.3	1 U	2	1 U	9.1	381	12.3	17.7	1 U				
Shallow	SW 46-01	6/10/2003	GW	980													
Shallow	SW 46-01	9/29/2003	GW		2.9	1 U	2	1 U	7.6	624	46.1	74.6	1 U				
Shallow	SW 46-01	9/29/2003	GW	1236													
Shallow	SW 46-01	1/22/2004	GW		2.2 J	1 U	1.5 J	1 U	5.8	483	26	55	1 U			Abandon: exceeds SLs for perchlorate, PCE and TCE, with stable to decreasing concentrations; redundant with upgradient monitoring at SW 40-57 (12 ft) and downgradient detections and monitoring at SW 47-02 (4 ft) and SW 28-41 (8 ft)	11
Shallow	SW 46-01	5/10/2004	GW	1420	4 J	0.8 U	2 J	1 U	9	620	27	66	1 U		0.5 U		
Shallow	SW 46-01	5/10/2004	GW	1280	4 J	0.8 U	2 J	1 U	9	650	27	65	1 U		0.5 U		
Shallow	SW 46-01	8/24/2004	GW	1610	4 J	0.8 U	3 J	1 U	7	520	34	50	1 U		0.5 U		
Shallow	SW 46-01	11/10/2004	GW	1750	3 J	0.8 U	3 J	1 U	8	280	25	43	1 U		0.5 U		
Shallow	SW 46-01	3/4/2005	GW	1790	3 J	0.8 U	3 J	1 U	6	300	29	43	1 U		0.5 U		
Shallow	SW 46-01	5/12/2005	GW	1370	3 J	0.8 U	2 J	1 U	6	300	24	33	1 U		0.5 U		
Shallow	SW 46-01	5/12/2006	GW	1600	3 J	0.8 U	3 J	1 U	7	530	40	53	1 U		0.5 U		
Shallow	SW 46-01	11/16/2006	GW	1200	6	0.8 U	2 J	1 U	5 J	400	50	44	1 U		0.5 U		
Shallow	SW 46-01	2/15/2007	GW	990	3 J	0.8 U	2 J	1 U	5 J	460	50	41	1 U		0.5 U		
Shallow	SW 46-01	10/2/2007	GW	1000	2 J	0.8 U	2 J	1 U	4 J	260	43	58	1 U		0.5 U		
Shallow	SW 46-01	5/20/2008	GW	710	50 UJ	50 UJ	50 UJ	50 UJ	50 UJ	290 J	50 UJ	99 J	50 UJ		50 UJ		
Shallow	SW 46-01	7/31/2009	GW		0.8 UJ	0.8 U	1 U	1 U	2 J	340	41	81	1 U	70 U	0.5 U		
Shallow	SW 46-01	8/4/2009	GW	660													
Shallow	SW 46-01	3/29/2010	GW	560	1 J	0.8 U	1 U	1 U	2 J	270	24	38	1 U	70 U	0.5 U		
Shallow	SW 46-01	9/13/2011	GW	860	0.8 U	0.8 U	1 U	1 U	1 J	300	21	31	1 U		0.5 U		
Shallow	SW 46-01	12/13/2011	GW		0.8 U	0.8 U	1 U	1 U	2 J	240	24	44	1 U		0.5 U		
Shallow	SW 46-01	5/16/2012	GW		1 J	0.8 U	1 U	1 U	2 J	380	26	37	1 U		0.5 U		
Shallow	SW 46-01	5/30/2013	GW	820	1 J	0.8 U	1 U	1 U	2 J	400	21	35	1 U		0.5 U		
Shallow	SW 46-01	5/14/2014	GW		0.7 J	0.5 U	0.5 U	0.5 U	1	320	14	23	0.5 U		0.5 U		
Shallow	SW 46-01	11/11/2014	GW		1 j	0.5 U	0.6 J	0.5 U	1	380 Ej	30	51	0.5 U		0.5 U		
Shallow	SW 46-01	5/13/2015	GW	540	0.7 J	0.5 U	0.5 U	0.5 U	1	260	14	21	0.5 U		0.5 U		
Shallow	SW 46-01	3/30/2016	GW	480	1	0.5 U	0.5 U	0.5 U	0.9 J	300	14	23	0.5 U		0.5 U		
Shallow	SW 46-01	4/18/2017	GW	690	0.9 J	0.5 U	0.5 U	0.5 U	0.8 J	300	13	20	0.5 U		0.5 U		
Shallow	SW 70-01	2/3/2004	GW		6.9	1 U	3.1	1 U	1 U	1 U	1 U	1 U	1 U				
Shallow	SW 70-01	5/11/2004	GW	2290													
Shallow	SW 70-01	8/19/2004	GW	2970													
Shallow	SW 70-01	11/4/2004	GW	2400												Abandon: exceeded SL for perchlorate only when last sampled in 2014, with decreasing trend; redundant with downgradient detections and perchlorate monitoring at SW 74-07 (7 ft)	16
Shallow	SW 70-01	3/3/2005	GW	6110													
Shallow	SW 70-01	5/17/2005	GW	3590													
Shallow	SW 70-01	5/11/2006	GW	870													
Shallow	SW 70-01	8/4/2009	GW	150													
Shallow	SW 70-01	3/17/2010	GW	90													
Shallow	SW 70-01	9/13/2011	GW	110	3 J	0.8 U	3 J	1 U	0.8 U	0.8 U	1 U	0.8 U	1 U		0.5 U		
Shallow	SW 70-01	5/15/2012	GW		3 J	0.8 U	3 J	1 U	0.8 U	0.8 U	1 U	0.8 U	1 U		0.5 U		
Shallow	SW 70-01	5/24/2013	GW	65	2 J	0.8 U	1 J	1 U	0.8 U	0.8 U	1 U	0.8 U	1 U		0.5 U		
Shallow	SW 70-01	5/15/2014	GW	82	1	0.5 U	0.8 J	0.5 U	0.5 U	0.5 U	0.5 U	0.5 U	0.5 U		0.5 U		

Table 3 - Shallow Groundwater Historical Results and Well Abandonment Rationale
Excluding Wells in Project Cub Area

Aquifer	Location	Date Sampled	Matrix	Perchlorate µg/L	111TCA µg/L	112TCA µg/L	11DCA µg/L	12DCA µg/L	11DCE µg/L	PCE µg/L	TCE µg/L	cis-12DCE µg/L	VC µg/L	14Dioxane µg/L	Benzene µg/L	Rationale	Sample Depth
Screening Levels (SLs):				**15**	**200**	**5**	**140**	**5**	**7**	**5**	**5**	**70**	**2**	**7.8**	**5**		(ft)
Shallow	SW 74-02	11/4/2002	GW		1 U	1 U	1 U	1 U	1 U	1218	12.4	20.5	1 U			Abandon: exceeded SLs for perchlorate and PCE, when last sampled in 2014, with decreasing trends; redundant with downgradient monitoring and similar wells in general area (retain nearby SW 74-07)	7
Shallow	SW 74-02	5/21/2003	GW	17100	1 U	1 U	1 U	1 U	1 U	7.6	1.3	1 U	1 U				
Shallow	SW 74-02	2/2/2004	GW		1 U	1 U	1 U	1 U	1 U	1935	30.2	37.5	1 U				
Shallow	SW 74-02	8/30/2004	GW	10300	4 U	4 U	5 U	5 U	4 U	1700	25	42	5 U		3 U		
Shallow	SW 74-02	11/4/2004	GW	403	6	0.8 U	1 U	1 U	0.8 U	0.8 U	1 U	5 J	1 U		0.5 U		
Shallow	SW 74-02	3/4/2005	GW	3.3 J	0.8 U	0.8 U	2 J	1 U	0.8 U	0.8 U	1 U	0.8 U	1 U		0.5 U		
Shallow	SW 74-02	8/19/2009	GW	720	0.8 U	0.8 U	1 U	1 U	0.8 U	480	10	16	1 U	70 U	0.5 U		
Shallow	SW 74-02	3/18/2010	GW	390	0.8 U	0.8 U	1 U	1 U	0.8 U	280	5	8	1 U	70 U	0.5 U		
Shallow	SW 74-02	9/14/2011	GW	190	2 J	0.8 U	1 J	1 U	0.8 U	28	1 J	0.9 J	1 U		0.5 U		
Shallow	SW 74-02	5/15/2012	GW		0.8 U	0.8 U	1 U	1 U	0.8 U	280	8	11	1 U		0.5 U		
Shallow	SW 74-02	5/15/2012	GW		0.8 U	0.8 U	1 U	1 U	0.8 U	280	8	10	1 U		0.5 U		
Shallow	SW 74-02	5/31/2013	GW	160	0.8 U	0.8 U	1 U	1 U	0.8 U	59	4 J	4 J	1 U		0.5 U		
Shallow	SW 74-02	5/17/2014	GW	110	0.5 U	0.5 U	0.5 U	0.5 U	0.5 U	22	2	1	0.5 U		0.5 U		
Shallow	SW 74-06	5/12/2004	GW	221	12	0.8 U	10	1 U	7	280	62	49	7		0.5 U	Abandon: exceeded SLs for perchlorate, PCE, and TCE, when last sampled in 2014, with stable to decreasing trends; redundant with nearby monitoring at SW 74-07 (7 ft)	7
Shallow	SW 74-06	8/20/2004	GW	132	16	0.8 U	10	1 U	6	230	38	60	6		0.5 U		
Shallow	SW 74-06	11/11/2004	GW	150	9	0.8 U	12	1 U	7	240	32	50	7		0.5 U		
Shallow	SW 74-06	3/4/2005	GW	60.1	7	0.8 U	10	1 U	7	250	33	48	5 J		0.5 U		
Shallow	SW 74-06	5/17/2005	GW		12	0.8 U	10	1 U	7	260	23	42	5 J		0.5 U		
Shallow	SW 74-06	5/17/2006	GW		4 J	0.8 U	9	1 U	7	180	24	29	4 J		0.5 U		
Shallow	SW 74-06	8/18/2009	GW	72	3 J	0.8 U	12	1 U	5	260	49	46	6	70 U	0.5 U		
Shallow	SW 74-06	3/18/2010	GW	80	3 J	0.8 U	11	1 U	0.8 U	260	47	39	5	70 U	0.5 U		
Shallow	SW 74-06	9/14/2011	GW	140	2 J	0.8 U	9	1 U	2 J	180	44	32	1 J		0.5 U		
Shallow	SW 74-06	5/14/2012	GW	110	2 J	0.8 U	7	1 U	2 J	180	44	32	1 J		0.5 U		
Shallow	SW 74-06	5/31/2013	GW	85	2 J	0.8 U	7	1 U	2 J	140	45	31	1 U		0.5 U		
Shallow	SW 74-06	5/17/2014	GW	53	1	0.5 U	6	0.5 U	2	120	43	32	1		0.5 U		
Shallow	SW 105-01	11/5/2002	GW		2.7	1 U	1 U	1 U	1.8	2.8	1 U	1 U	1 U			Abandon: below SLs in 3 of last 4 years; exceeded SL for perchlorate only in 2016; perchlorate concentrations are significantly lower since soil IMs in 2011; redundant with other TTU monitoring for perchlorate and VOCs in the vicinity, and downgradient detections of same COCs at BW 14-02S (16 ft)	7
Shallow	SW 105-01	5/19/2003	GW	932	2.7	1 U	1 U	1 U	2.8	5.4	1 U	1 U	1 U				
Shallow	SW 105-01	5/19/2003	GW	938													
Shallow	SW 105-01	5/6/2004	GW	19000													
Shallow	SW 105-01	8/19/2004	GW	16100													
Shallow	SW 105-01	11/2/2004	GW	11700													
Shallow	SW 105-01	3/4/2005	GW	6510													
Shallow	SW 105-01	5/18/2005	GW	2570													
Shallow	SW 105-01	5/11/2006	GW	8100													
Shallow	SW 105-01	5/30/2008	GW	0.43 J	5 UJ	5 UJ	5 UJ	5 UJ	5 UJ	5 UJ	5 UJ	5 UJ	5 UJ		5 UJ		
Shallow	SW 105-01	9/9/2011	GW	700	0.8 U	0.8 U	1 U	1 U	0.8 U	5 J	1 U	0.8 U	1 U		0.5 U		
Shallow	SW 105-01	5/9/2012	GW	8700	2 J	0.8 U	1 J	1 U	2 J	34	1 U	4 J	1 U		0.5 U		
Shallow	SW 105-01	5/30/2013	GW	46	0.8 U	0.8 U	1 U	1 U	0.8 U	0.8 U	1 U	0.8 U	1 U		0.5 U		
Shallow	SW 105-01	5/14/2014	GW	1 U													
Shallow	SW 105-01	5/13/2015	GW	0.2 U	0.5 U	0.5 U	0.5 U	0.5 U	0.5 U	0.5 U	0.5 U	0.5 U	0.5 U		0.5 U		
Shallow	SW 105-01	3/31/2016	GW	550	0.5 U	0.5 U	0.5 U	0.5 U	0.5 U	0.8 J	0.5 U	0.5 U	0.5 U		0.5 U		
Shallow	SW 105-01	4/19/2017	GW	0.8 J	0.5 U	0.5 U	0.5 U	0.5 U	0.5 U	0.5 U	0.5 U	0.5 U	0.5 U		0.5 U		

Table 3 - Shallow Groundwater Historical Results and Well Abandonment Rationale
Excluding Wells in Project Cub Area

Aquifer	Location	Date Sampled	Matrix	Perchlorate µg/L	111TCA µg/L	112TCA µg/L	11DCA µg/L	12DCA µg/L	11DCE µg/L	PCE µg/L	TCE µg/L	cis-12DCE µg/L	VC µg/L	14Dioxane µg/L	Benzene µg/L	Rationale	Sample Depth
Screening Levels (SLs):				**15**	**200**	**5**	**140**	**5**	**7**	**5**	**5**	**70**	**2**	**7.8**	**5**		(ft)
Shallow	SW 105-03D	5/4/2004	GW	7910	6	0.8 U	1 J	1 U	16	26	1 U	2 J	1 U		0.5 U		
Shallow	SW 105-03D	8/19/2004	GW	6240													
Shallow	SW 105-03D	11/4/2004	GW	7390													
Shallow	SW 105-03D	3/2/2005	GW	6660													
Shallow	SW 105-03D	5/18/2005	GW	9100													
Shallow	SW 105-03D	5/18/2006	GW	14000													
Shallow	SW 105-03D	10/4/2007	GW	20000	6	0.8 U	3 J	1 U	5	68	1 J	6	1 U		0.5 U		
Shallow	SW 105-03D	5/31/2008	GW	12000	2.4 J	5 UJ	1.3 J	5 UJ	2.8 J	29 J	5 UJ	3.6 J	5 UJ		5 UJ		
Shallow	SW 105-03D	8/12/2009	GW	19000	4 J	0.8 U	2 J	1 U	11	46	1 U	5	1 U	70 U	0.5 U		
Shallow	SW 105-03D	3/29/2010	GW	3400	1 J	0.8 U	1 U	1 U	2 J	19	1 U	2 J	1 U	70 U	0.5 U		
Shallow	SW 105-03D	9/12/2011	GW	28000	2 J	0.8 U	2 J	1 U	3 J	33	1 J	6	1 U		0.5 U		
Shallow	SW 105-03D	4/3/2012	GW	8100	2 J	0.8 U	1 J	1 U	3 J	42	1 U	6	1 U		0.5 U		
Shallow	SW 105-03D	5/24/2013	GW	2300	2 J	0.8 U	1 J	1 U	2 J	35	1 U	4 J	1 U		0.5 U		
Shallow	SW 105-03D	5/16/2014	GW	1300	0.5 U	0.5 U	0.5 U	0.5 U	0.6 J	14	0.5 U	1	0.5 U		0.5 U		
Shallow	SW 105-03D	5/15/2015	GW	3200	0.9 J	0.5 U	0.6 J	0.5 U	1	19	0.5 U	2	0.5 U		0.5 U		
Shallow	SW 105-03D	3/30/2016	GW	3200	1	0.5 U	0.5 J	0.5 U	0.5 U	14	0.5 U	1	0.5 U		0.5 U		
Shallow	SW 105-03D	4/18/2017	GW	1300	0.8 J	0.5 U	0.7 J	0.5 U	0.5 U	8	0.5 U	2	0.5 U		0.5 U		

Abandon: exceeds SLs for perchlorate and PCE, which have decreasing trends, and are significantly lower since soil IMs in 2011; redundant with other TTU monitoring for perchlorate and VOCs in the vicinity, and downgradient detections of same COCs at BW 14-02S (16 ft)

18

Notes: All well were evaluated for potential abandonment with respect to the objectives of the approved 2015 Sampling and Analysis Plan, water level needs, if any, the general presence of stable to decreasing concentrations trends across the Site, geographic position, plume position, planned restriction against the use of ground water, planned requirement for vapor barriers as part of redevelopment, USEPA's Vapor Intrusion Screening Level calculator, and redundancy (evaluated by COCs, sample depth, and groundwater flow considerations) in meeting objectives. The evaluation of all wells utilized the most recent sampling data for each well, which is from 2017 for source, performance, and sentinel wells and from the years indicated in the "rationale summary" column for "water level" only wells under the 2015 SAP.

* The rationale for well abandonment may include reference to other wells with an indication of sampling depth in those other wells provided in parentheses.

1 Regulatory oversight of TTU monitoring was transferred from VA DEQ to USEPA on March 21, 2012 as part of VA DEQ's approval of the closure of Thermal Treatment Facility soils in the northwestern part of the Site. Five wells were transferred in the monitoring program (BW TTU-02S, BW TTU-02D, BW TTU-05, SW TTU-03, and SW TTU-05.) BW TTU-02S and BW TTU-02D were previously abandoned on March 29, 2012.

111TCA = 1,1,1-trichlorethane
112TCA = 1,1,2-trichlorethane
11DCA = 1,1-dichlorethane
12DCA = 1,2-dichlorethane
11DCE = 1,1-dichlorethene
PCE = tetrachloroethene
TCE = trichloroethene
cis-12DCE = cis1,2-dichloroethene
VC = vinyl chloride

Aquifer	Location	Date Sampled	Matrix	Perchlorate µg/L	111TCA µg/L	112TCA µg/L	11DCA µg/L	12DCA µg/L	11DCE µg/L	PCE µg/L	TCE µg/L	cis-12DCE µg/L	VC µg/L	14Dioxane µg/L	Benzene µg/L	Rationale
Screening Levels (SLs):				**15**	**200**	**5**	**140**	**5**	**7**	**5**	**5**	**70**	**2**	**7.8**	**5**	
Surface	STR 02	2/18/2002	SW		1 U	1 U	1.9	1 U	1.3	1 U	2.9	1.1	1 U			Surface Water Location - dry and not sampled since 2012; remove from sampling program
Surface	STR 02	5/18/2002	SW		1 U	1 U	1 U	1 U	1 U	1 U	1 U	1 U	1 U			
Surface	STR 02	11/5/2002	SW		1 U	1 U	1 U	1 U	1 U	1 U	1.4	1 U	1 U			
Surface	STR 02	2/13/2003	SW		1 UJ	1 UJ	1 UJ	1 UJ	1 UJ	1 UJ	1.2 J	1 UJ	1 UJ			
Surface	STR 02	5/23/2003	SW	4 U	1 U	1 U	1 U	1 U	1 U	1 U	1 U	1 U	1 U			
Surface	STR 02	8/7/2003	SW	2 U	1 U		2.7	1 U	1.9	1 U	3.5	1 U	1 U			
Surface	STR 02	8/7/2003	SW	4 U												
Surface	STR 02	11/22/2003	SW	4 U	1 U	1 U	1 U	1 U	1 U	1 U	1 U	1 U	1 U			
Surface	STR 02	2/12/2004	SW		1.9	1 U	1 U	1 U	1 U	1 U	1 U	1 U	1 U			
Surface	STR 02	3/9/2004	SW	5.7	1 U	1 U	2.3	1 U	2.1 U	1 U	2.9	1 U	1 U			
Surface	STR 02	3/9/2004	SW	4.3 J												
Surface	STR 02	11/23/2005	SW	8.1	0.8 U	0.8 U	1 U	1 U	0.8 U	0.8 U	1 U	0.8 U	1 U		0.5 U	
Surface	STR 02	2/16/2006	SW	0.91 J	0.8 U	0.8 U	1 U	1 U	0.8 U	0.8 U	1 U	0.8 U	1 U		0.5 U	
Surface	STR 02	5/18/2006	SW	0.2 U	0.8 U	0.8 U	5	1 U	4 J	0.8 U	6	0.8 U	1 U		0.5 U	
Surface	STR 02	2/21/2007	SW	0.5 J	0.8 U	0.8 U	1 U	1 U	0.8 U	0.8 U	1 U	0.8 U	1 U		0.5 U	
Surface	STR 02	3/26/2010	SW	0.2 U	0.8 U	0.8 U	1 U	1 U	0.8 U	0.8 U	1 U	0.8 U	1 U	70 U	0.5 U	
Surface	STR 02	11/11/2010	SW	0.2 U	0.8 U	0.8 U	1 J	1 U	1 J	0.8 U	2 J	0.8 U	1 U	70 U	0.5 U	
Surface	STR 02	9/8/2011	GW	1.8	0.8 U	0.8 U	1 U	1 U	0.8 U	0.8 U	1 U	0.8 U	1 U		0.5 U	
Surface	STR 02	5/17/2012	SW	0.2 U	0.8 U	0.8 U	2 J	1 U	2 J	0.8 U	3 J	0.8 U	1 U		0.5 U	
Surface	STR 04	2/18/2002	SW		2.9	1 U	1 U	1 U	1.1	9.5	1.5	1.6	1 U			Surface Water Location - Retain and Sample
Surface	STR 04	4/29/2002	SW		6 J		U	5 J	U	13	3 J					
Surface	STR 04	5/18/2002	SW		1 U	1 U	1 U	1 U	1 U	4.2	1 U	1 U	1 U			
Surface	STR 04	8/7/2002	SW		1.1	1 U	1 U	1 U	1 U	1.7	1.7	1 U	1 U			
Surface	STR 04	11/5/2002	SW		1 U	1 U	1 U	1 U	1 U	7.5	1.1	1.6	1 U			
Surface	STR 04	2/13/2003	SW		1 UJ	1 UJ	1 UJ	1 UJ	1 UJ	9.2 J	1.4 J	2.4 J	1 UJ			
Surface	STR 04	5/23/2003	SW	32.1	1 U	1 U	1 U	1 U	1 U	2.2	1 U	1 U	1 U			
Surface	STR 04	8/7/2003	SW	7.7	1 U		1 U	1 U	1 U	1 U	1 U	1 U	1 U			
Surface	STR 04	8/7/2003	SW	6.9												
Surface	STR 04	11/22/2003	SW	28	1 U	1 U	1 U	1 U	1 U	4.5	1 U	1.4	1 U			
Surface	STR 04	2/12/2004	SW		1 U	1 U	1 U	1 U	1 U	3.6	1 U	1.1	1 U			
Surface	STR 04	3/9/2004	SW	68.4	1 U	1 U	1 U	1 U	1 U	4.2	1 U	1.3	1 U			
Surface	STR 04	3/9/2004	SW	61.1												
Surface	STR 04	5/17/2004	SW	10.6	0.8 U	0.8 U	1 U	1 U	0.8 U	0.8 U	1 U	0.8 U	1 U		0.5 U	
Surface	STR 04	5/17/2004	SW	8.6												
Surface	STR 04	8/26/2004	SW	0.7 U	0.8 U	0.8 U	1 U	1 U	0.8 U	0.8 U	1 U	0.8 U	1 U		0.5 U	
Surface	STR 04	8/26/2004	SW	0.7 U	0.8 U	0.8 U	1 U	1 U	0.8 U	0.8 U	1 U	0.8 U	1 U		0.5 U	
Surface	STR 04	11/8/2004	SW	28.1	0.8 U	0.8 U	1 U	1 U	0.8 U	3 J	1 U	1 J	1 U		0.5 U	
Surface	STR 04	11/8/2004	SW	28.4	0.8 U	0.8 U	1 U	1 U	0.8 U	3 J	1 U	1 J	1 U		0.5 U	
Surface	STR 04	3/3/2005	SW	74	0.8 U	0.8 U	1 U	1 U	0.8 U	4 J	1 U	2 J	1 U		0.5 U	
Surface	STR 04	3/3/2005	SW	74.5	0.8 U	0.8 U	1 U	1 U	0.8 U	3 J	1 U	1 J	1 U		0.5 U	
Surface	STR 04	5/19/2005	SW	24.6	0.8 U	0.8 U	1 U	1 U	0.8 U	2 J	1 U	1 J	1 U		0.5 U	
Surface	STR 04	5/19/2005	SW	26	0.8 U	0.8 U	1 U	1 U	0.8 U	2 J	1 U	0.9 J	1 U		0.5 U	

Aquifer	Location	Date Sampled	Matrix	Perchlorate µg/L	111TCA µg/L	112TCA µg/L	11DCA µg/L	12DCA µg/L	11DCE µg/L	PCE µg/L	TCE µg/L	cis-12DCE µg/L	VC µg/L	14Dioxane µg/L	Benzene µg/L	Rationale
Screening Levels (SLs):				**15**	**200**	**5**	**140**	**5**	**7**	**5**	**5**	**70**	**2**	**7.8**	**5**	
Surface	STR 04	8/17/2005	SW	2	0.8 U	0.8 U	1 U	1 U	0.8 U	0.8 U	1 U	0.8 U	1 U		0.5 U	
Surface	STR 04	8/17/2005	SW	2.3	0.8 U	0.8 U	1 U	1 U	0.8 U	0.8 U	1 U	0.8 U	1 U		0.5 U	
Surface	STR 04	11/23/2005	SW	23	0.8 U	0.8 U	1 U	1 U	0.8 U	2 J	1 U	0.9 J	1 U		0.5 U	
Surface	STR 04	11/23/2005	SW	27	0.8 U	0.8 U	1 U	1 U	0.8 U	2 J	1 U	0.9 J	1 U		0.5 U	
Surface	STR 04	2/16/2006	SW	20	0.8 U	0.8 U	1 U	1 U	0.8 U	2 J	1 U	1 J	1 U		0.5 U	
Surface	STR 04	2/16/2006	SW	22	0.8 U	0.8 U	1 U	1 U	0.8 U	2 J	1 U	1 J	1 U		0.5 U	
Surface	STR 04	5/18/2006	SW	13	0.8 U	0.8 U	1 U	1 U	0.8 U	2 J	1 U	1 J	1 U		0.5 U	
Surface	STR 04	5/18/2006	SW	14	0.8 U	0.8 U	1 U	1 U	0.8 U	2 J	1 U	1 J	1 U		0.5 U	
Surface	STR 04	8/15/2006	SW	1.5	3 J	0.8 U	3 J	1 U	3 J	0.8 U	1 U	0.8 U	1 U		0.5 U	
Surface	STR 04	8/15/2006	SW	1.5	3 J	0.8 U	3 J	1 U	2 J	0.8 U	1 U	0.8 U	1 U		0.5 U	
Surface	STR 04	11/17/2006	SW	11	0.8 U	0.8 U	1 U	1 U	0.8 U	1 J	1 U	0.8 U	1 U		0.5 U	
Surface	STR 04	2/13/2007	SW	42	0.8 U	0.8 U	1 U	1 U	0.8 U	8	2 J	4 J	1 U		0.5 U	
Surface	STR 04	9/25/2007	SW	0.2 J	0.8 U	0.8 U	1 U	1 U	0.8 U	0.8 U	1 U	0.8 U	1 U		0.5 U	
Surface	STR 04	8/19/2009	SW	60	2 J	0.8 U	3 J	1 U	2 J	3 J	3 J	2 J	1 U	70 U	0.5 U	
Surface	STR 04	3/26/2010	SW	35	0.8 U	0.8 U	1 U	1 U	0.8 U	1 J	1 U	0.8 U	1 U	70 U	0.5 U	
Surface	STR 04	11/11/2010	SW	13	0.8 U	0.8 U	1 U	1 U	0.8 U	6	1 U	4 J	1 U	70 U	0.5 U	
Surface	STR 04	9/1/2011	SW	34	0.8 U	0.8 U	1 U	1 U	0.8 U	1 J	1 U	0.8 U	1 U	1.1 J	0.5 U	
Surface	STR 04	9/1/2011	SW	31	0.8 U	0.8 U	1 U	1 U	0.8 U	2 J	1 U	0.8 U	1 U	1.2 J	0.5 U	
Surface	STR 04	5/17/2012	SW	9.5	0.8 U	0.8 U	1 U	1 U	0.8 U	2 J	1 U	2 J	1 U		0.5 U	
Surface	STR 04	5/29/2013	SW	14	0.8 U	0.8 U	1 U	1 U	0.8 U	1 J	1 U	0.8 U	1 U	0.55	0.5 U	Surface Water Location - Retain and Sample
Surface	STR 04	11/19/2013	SW	21	0.8 U	0.8 U	1 U	1 U	0.8 U	3 J	1 U	0.9 J	1 U	70 U	0.5 U	
Surface	STR 04	5/17/2014	SW	7.6	0.5 U	0.5 U	0.5 U	0.5 U	0.5 U	1	0.5 U	0.7 J	0.5 U		0.5 U	
Surface	STR 04	5/12/2015	SW	16	0.5 U	0.5 U	0.5 U	0.5 U	0.5 U	2	0.5 U	0.9 J	0.5 U		0.5 U	
Surface	STR 04	11/5/2015	SW	9.8	0.5 U	0.5 U	0.5 U	0.5 U	0.5 U	3	0.5 U	2	0.5 U		0.5 U	
Surface	STR 04	3/29/2016	SW	20	0.5 U	0.5 U	0.5 U	0.5 U	0.5 U	1	0.5 U	0.8 J	0.5 U		0.5 U	
Surface	STR 04	10/26/2016	SW	9.1	0.5 U	0.5 U	0.5 U	0.5 U	0.5 U	2	0.5 U	0.8 J	0.5 U		0.5 U	
Surface	STR 04	4/18/2017	SW	12	0.5 U	0.5 U	0.5 U	0.5 U	0.5 U	2	0.5 U	1	0.5 U		0.5 U	
Surface	STR 40-15	5/18/2004	SW	40.9												
Surface	STR 40-15	5/19/2005	SW	67.9	0.8 U	0.8 U	1 U	1 U	0.8 U	0.8 U	1 U	0.8 U	1 U		0.5 U	
Surface	STR 40-15	5/18/2006	SW	23	0.8 U	0.8 U	1 U	1 U	0.8 U	4 J	2 J	8	1 U		0.5 U	
Surface	STR 40-15	11/17/2006	SW	24												
Surface	STR 40-15	8/19/2009	SW	7.3	0.8 U	0.8 U	1 U	1 U	0.8 J	140	34	230	8	70 U	0.5 U	
Surface	STR 40-15	3/26/2010	SW	5.6	0.8 U	0.8 U	1 U	1 U	0.8 U	3 J	1 U	7	1 U	70 U	0.5 U	
Surface	STR 40-15	9/1/2011	GW	0.27 J	0.8 U	0.8 U	1 U	1 U	0.8 U	0.8 U	1 U	2 J	1 U		0.5 U	
Surface	STR 40-15	5/17/2012	SW		0.8 U	0.8 U	1 U	1 U	0.8 U	0.8 U	1 U	1 J	1 U		0.5 U	
Surface	STR 40-15	5/29/2013	SW	15	0.8 U	0.8 U	1 U	1 U	0.8 U	34	8	65	2 J		0.5 U	
Surface	STR 40-15	5/17/2014	SW		0.5 U	0.5 U	0.5 U	0.5 U	0.5 U	0.5 U	0.5 U	3	0.5 U		0.5 U	
Surface	STR 40-15	5/12/2015	SW	4.3	0.5 U	0.5 U	0.5 U	0.5 U	0.5 U	0.5 U	0.5 U	1	0.5 U		0.5 U	
Surface	STR 40-15	3/29/2016	SW	6.6	0.5 U	0.5 U	0.5 U	0.5 U	0.5 U	6	1	10	0.5 U		0.5 U	
Surface	STR 40-15	4/18/2017	SW	3.4	0.5 U	0.5 U	0.5 U	0.5 U	0.5 U	0.5 U	0.5 U	1	0.5 U		0.5 U	

Aquifer	Location	Date Sampled	Matrix	Perchlorate µg/L	111TCA µg/L	112TCA µg/L	11DCA µg/L	12DCA µg/L	11DCE µg/L	PCE µg/L	TCE µg/L	cis-12DCE µg/L	VC µg/L	14Dioxane µg/L	Benzene µg/L	Rationale
Screening Levels (SLs):				**15**	**200**	**5**	**140**	**5**	**7**	**5**	**5**	**70**	**2**	**7.8**	**5**	
Surface	West 01	2/4/2009	SW	1400	0.8 U	0.8 U	9	1 U	0.8 U	0.8 U	1 U	0.8 U	1 U	70 U	0.5 U	Surface Water Location - Retain and Sample
Surface	West 01	3/26/2010	SW	230	0.8 U	0.8 U	1 J	1 U	0.8 U	0.8 U	1 U	0.8 U	1 U	70 U	0.5 U	
Surface	West 01	3/26/2010	SW	240	0.8 U	0.8 U	1 J	1 U	0.8 U	0.8 U	1 U	0.8 U	1 U	70 U	0.5 U	
Surface	West 01	9/8/2011	GW	88	0.8 U	0.8 U	1 U	1 U	0.8 U	0.8 U	1 U	0.8 U	1 U		0.5 U	
Surface	West 01	5/30/2013	SW	1800	0.8 U	0.8 U	3 J	1 U	0.8 U	0.8 U	1 U	0.8 U	1 U		0.5 U	
Surface	West 01	5/18/2014	SW	1200	0.5 U	0.5 U	2	0.5 U	0.5 U	0.5 U	0.5 U	0.5 U	0.5 U		0.5 U	
Surface	West 01	5/12/2015	SW	1100	0.5 U	0.5 U	0.5 U	0.5 U	0.5 U	1	0.5 U	0.5 U	0.5 U		0.5 U	
Surface	West 01	3/29/2016	SW	500	0.5 U	0.5 U	0.5 U	0.5 U	0.5 U	2	0.5 U	1 J	0.5 U		0.5 U	
Surface	WEST 01	4/18/2017	SW	210	0.5 U	0.5 U	0.5 U	0.5 U	0.5 U	2	0.5 U	0.5 U	0.5 U		0.5 U	

Notes: All well were evaluated for potential abandonment with respect to the objectives of the approved 2015 Sampling and Analysis Plan, water level needs, if any, the general presence of stable to decreasing concentrations trends across the Site, geographic position, plume position, planned restriction against the use of ground water, planned requirement for vapor barriers as part of redevelopment, USEPA's Vapor Intrusion Screening Level calculator, and redundancy (evaluated by COCs, sample depth, and groundwater flow considerations) in meeting objectives. The evaluation of all wells utilized the most recent sampling data for each well, which is from 2017 for source, performance, and sentinel wells and from the years indicated in the "rationale summary" column for "water level" only wells under the 2015 SAP.

* The rationale for well abandonment may include reference to other wells with an indication of sampling depth in those other wells provided in parentheses.

111TCA = 1,1,1-trichlorethane
112TCA = 1,1,2-trichlorethane
11DCA = 1,1-dichlorethane
12DCA = 1,2-dichlorethane
11DCE = 1,1-dichlorethene
PCE = tetrachloroethene
TCE = trichloroethene
cis-12DCE = cis1,2-dichloroethene
VC = vinyl chloride

TABLE 5
Revised Sampling Plan
Atlantic Research Corporation, Gainesville, Virginia

Location	Aquifer Designation	Purpose	Water Levels Annually	Perchlorate	VOCs	1,4-Dioxane
BW 14-02S	Shallow	Performance	✓	✓	✓	
BW 21-04D	Shallow	Performance	✓	✓	✓	
BW 28-02S	Shallow	Performance	✓	✓	✓	✓
BW 28-04D	Shallow	Performance	✓	✓	✓	
BW 45-03S	Shallow	Performance	✓	✓	✓	
BW 79-02S	Shallow	Source	✓	✓	✓	✓
BW CM-01S	Shallow	Source	✓	✓	✓	
BW CG-01D	Shallow	Source	✓	✓	✓	
BW TTU-03D	Shallow	Performance	✓	✓	✓	
SW 5-04	Shallow	Source	✓	✓	✓	✓
SW 28-41	Shallow	Performance	✓	✓	✓	
SW 40-07A	Shallow	Source	✓	✓	✓	
SW 40-57	Shallow	Performance	✓	✓	✓	
SW 42-02	Shallow	Performance	✓	✓	✓	
SW 47-02	Shallow	Performance	✓	✓	✓	
SW 74-07	Shallow	Performance	✓	✓	✓	
SW 200-02	Shallow	Sentinel	✓	✓	✓	
SW 212-01	Shallow	Sentinel	✓	✓	✓	
SW 222-02	Shallow	Sentinel	✓	✓	✓	
SW SB-03	Shallow	Sentinel	✓	✓	✓	✓
SW TTU-03	Shallow	Performance	✓	✓	✓	
BW 78-12D	Deep	Source	✓	✓		
BW CM-03	Deep	Water Level	✓			
BW NE-01D	Deep	Water Level	✓			
DW 76-01	Deep	Source	✓	✓	✓	✓
DW 200-01	Deep	Sentinel	✓	✓	✓	
DW 213-01	Deep	Performance	✓	✓		
DW SB-01	Deep	Sentinel	✓	✓	✓	
DW SB-02	Deep	Sentinel	✓	✓	✓	✓
DW-6	Deep	Water Level	✓			
DW-12	Deep	Sentinel	✓	✓	✓	✓
DW-13	Deep	Capture	✓	✓	✓	✓
DW-13 MID	Deep	Port Sampling			✓	
DW-15	Deep	Performance	✓		✓	
DW-16	Deep	Performance	✓		✓	
DW-18	Deep	Performance	✓		✓	
DW-20	Deep	Performance	✓	✓	✓	
DW-23	Deep	Performance	✓	✓	✓	✓
DW-25	Deep	Water Level	✓			
DW-26I	Deep	Source	✓	✓	✓	
DW-28I	Deep	Source	✓	✓	✓	✓
DW-28D	Deep	Source	✓	✓	✓	
DW-29S	Deep	Source	✓	✓	✓	
DW-29I	Deep	Water Level	✓			
DW-30S	Deep	Performance	✓	✓	✓	
DW-32I	Deep	Source	✓		✓	✓

TABLE 5
Revised Sampling Plan
Atlantic Research Corporation, Gainesville, Virginia

Location	Aquifer Designation	Purpose	Water Levels Annually	Perchlorate	VOCs	1,4-Dioxane
DW-36D	Deep	Water Level	✓			
DW-72B	Deep	Source	✓		✓	✓
IW-6	Deep	Source	✓	✓	✓	
IW-7	Deep	Backup Injection				
IW-8	Deep	Injection				
STR 04	Surface water	Sentinel		✓	✓	
STR 40-15	Surface water	Performance		✓	✓	
West 01	Surface water	Source		✓	✓	

Notes:

All locations will be sampled annually during the Spring. Sentinel locations and DW-13 will also be sampled semi-annually.
DW-13 and DW-13 MID are sampled within the NDTS system treatment building.
Field parameter will be collected each time a well is sampled.
Field parameters include temperature, pH, ORP, DO, conductivity, and water levels.
DW-13 may also be sampled for other constituents not listed to support operation and evaluation of the northern deep groundwater treatment system (NDTS)
VOCs - volatile organic compounds

APPENDIX A

WELL ABANDONMENT STATEMENT OF WORK

DATE: May 10, 2017

SUBJECT: Atlantic Research Corporation Facility
Gainesville, Virginia,
Sequa Corporation

PROJECT NO.: 229931.0000
Statement of Work
Well Abandonment

1.0 OBJECTIVES

TRC Environmental (TRC) has been retained by the Atlantic Research Corporation (ARC) for ongoing investigation and remediation of the ARC facility located in Gainesville, Virginia (Site). This Statement of Work (SOW) is for the completion of well abandonment of wells no longer needed at the Site. The proper abandonment of unneeded wells is a best management practice and is particularly warranted in consideration of the planned redevelopment of the Site.

Approximately 93 wells were proposed for supplemental abandonment in the Sampling and Well Reduction Plan by TRC (2017 Plan), dated May 9, 2017. The abandonment program is summarized in Table 1 (Proposed Well Abandonment Summary [to be created when approved]). Site activities will be performed in accordance with TRC's Health and Safety Plan (HASP) for the Site and Standard Operating Procedures (SOPs).

2.0 WELL ABANDONMENT METHODOLOGY

The following methodology will be implemented with the objective of achieving abandonment of all wells/well points identified in Table 1 and not inadvertently abandoning other wells to be retained.

The methodology will consist of the following primary field and quality assurance elements:

- TRC personnel will coordinate and facilitate well abandonment by the Driller and ensure that documentation of abandonment is recorded and reported.
- In preparation for abandonment, TRC will identify, locate, and mark wells planned for abandonment. It is recommended that wells be flagged and marked for easier future reference during the abandonment event. Wells may be located using handheld GPS and Site maps. It is imperative that any well to be abandoned is confirmed as the correct well by cross referencing figures, total depth, identifying markers and/or other well specific information so as to not damage a well that is planned for future sampling.
- TRC will communicate with the Driller regarding the location of each well to be abandoned and they will jointly identify access requirements (e.g., clearing requirements), if any, to facilitate abandonment.
- Prior to actual abandonment of a well by the Driller, measurements of the static water level and total depth will be made by TRC and recorded on field forms or in the logbook. Total depth will be checked against Table 1 as further confirmation of the well identification. Total depth and depth to water will be communicated to the Driller to facilitate field implementation of the well abandonment.
- Eichelbergers, Inc. (Eichelbergers) will provide Driller services for well abandonment at the Site. Eichelbergers has provided well abandonment and installation services at the Site and is familiar with

Site conditions. In accordance with its quote of February 27, 2017, Eichelbergers will provide a crew, trucks, grouting equipment, and supplies to achieve abandonment.
- A Field Form documenting abandonment is required for each well. The Field Form will be supplied by the Driller and submitted to the applicable regulatory agency following completion.

3.0 WELL ABANDONMENT PROCEDURES

The general abandonment procedures for all wells are as follows. Abandonment procedures will be in accordance with the Virginia Administrative Code (VAC) at 12 VAC § 5-630-450. The specific well abandonment procedures will be determined on a well by well basis in consultation with the selected drilling abandonment contractor:

- Well screens and inner and outer casings will not be removed as the wells will be grouted in place;
- Wells will be backfilled with grout using a tremie pipe and grouting from the bottom up, to a depth approximately five feet below ground surface;
- Open-borehole wells will be backfilled with grout using tremie pipe and grouting from the bottom up to a depth approximately five feet below ground surface, or in some cases, depending on the depth to groundwater and the specifics of the rock formation, may include filling part of the borehole within the bedrock with clean sand or gravel. In the latter case, grouting with a tremie pipe from bottom up will occur within the bedrock portion of the borehole for at least the upper five feet of the bedrock;
- The top five feet of the casing will be removed, and any annular space found around the remaining casing will be tremie grouted to the maximum depth possible;
- A grout or clay slurry will then be installed to completely fill the borehole void from five feet below ground surface to ground surface, and
- If a well that is recommended for abandonment is nested in the same completion/borehole as a well that is to be maintained as part of the monitoring network, then that well will be temporarily abandoned by installing a water tight sealing well cap. Once the monitoring activities for the nested well are complete and the nested well is deemed appropriate to abandon, all wells in the nest will be abandoned following the procedure summarized above.
- If artesian wells are encountered discuss with the driller and project team prior to proceeding.

4.0 Project TEAM

Project Manager – Geoffrey S. King
Field Coordinator/Quality Assurance Officer – John Lair
Field Team Leader – John Lair
Field Personnel – To Be Determined

Attachments:

- Health and Safety Plan (HASP)
- Table 1 (Groundwater Monitoring and Proposed Well Abandonment Summary; from Work Plan)

APPENDIX V

INSTITUTIONAL CONTROL PLAN

INSTITUTIONAL CONTROL PLAN

SUBMITTED TO USEPA REGION III

By:

Atlantic Research Corporation
5945 Wellington Road
Gainesville, Virginia 20155

October 3, 2018

Prepared By:

TRC Environmental Corporation
11231 Cornell Park Drive
Cincinnati, Ohio 45242
T: 513-489-2255

TABLE OF CONTENTS

1.0 INTRODUCTION 1
1.1 Description of Final Remedy 1
1.2 Purpose of Institutional Control Plan 2

2.0 GROUNDWATER USE RESTRICTION AND IMPLEMENTATION 2

3.0 REQUIREMENT FOR SOIL MANAGEMENT 3

4.0 REQUIREMENT FOR VAPOR INTRUSION CONTROL 4

5.0 COMPLIANCE WITH CONTROLS 4
5.1 Groundwater Use Restriction 5
5.2 Requirements for Soil Management and Vapor Intrusion Control 5
5.3 Compliance with the Approved Operation, Maintenance, and Monitoring Plans 5
5.4 Termination of Controls 6

6.0 REFERENCES 6

List of Figures

1: Site Location Map
2: Defined Polygons That May Require Soil Management at the Site
3: Defined Area That May Require Vapor Intrusion Mitigation at the Site

ACRONYMS

ARC	Atlantic Research Corporation
CMI Order	Corrective Measures Implementation Order
CMI Plan	Corrective Measures Implementation Plan
COCs	Constituents of Concern
HHRA	Human Health Risk Assessment
IC	Institutional Control
Integral	Integral Consulting Inc.
LLC	Limited Liability Company
MCL	Maximum Contaminant Level
O&M	Operations and Maintenance
RCRA	Resource Conservation and Recovery Act
SM Plan	Soil Management Plan
TRC	TRC Environmental Corporation
USEPA	United States Environmental Protection Agency
VOCs	Volatile Organic Compounds

1.0 INTRODUCTION

On October 20, 1992, Atlantic Research Corporation ("ARC") signed a Final Administrative Order on Consent for Corrective Measures Implementation ("CMI Order") at ARC's facility leased from Gainesville Associates[1], located at 5945 Wellington Road, Gainesville, Virginia 20155 ("Facility" or "Site"). The CMI Order requires that corrective measures at the Facility follow a Corrective Measures Implementation Plan ("CMI Plan"). Since 1992, ARC has implemented the CMI Plan in various phases, and has documented the results in reports including work plans, supplemental site investigation, risk assessment, and interim measure reports, and other documents that have been reviewed and approved by the United States Environmental Protection Agency ("USEPA"). The implementation of the CMI Plan has resulted in the remediation of hazardous substances on the Site including perchlorate, volatile organic compounds ("VOCs"), semi-volatile organic compounds, metals, energetic compounds, and polychlorinated biphenyls present in soil and groundwater.

In its June 14, 2018 letter, USEPA notified ARC that it has satisfactorily completed Interim Measures as set forth in the December 20, 2013 USEPA-approved IM Report to address perchlorate and other constituents of concern in soils at the Facility. Previously, USEPA approved ARC's Human Health Risk Assessment ("HHRA") in October 2016 that defined specific areas of the Site (Polygons) that continued to exceed risk management levels for residential use. Given that contaminants remain in soil at the Facility above residential risk management levels, and at concentrations above risk-based standards in groundwater beneath the Facility, USEPA also requested that ARC update the CMI Plan to include an Institutional Control Plan for USEPA review and approval.

1.1 Description of Final Remedy

The final remedy for the Site consists of ongoing groundwater remediation and monitoring, an institutional control restricting the use of groundwater at the Site by the owners of the Site in the form of a proposed deed restriction, requirements for USEPA-approved soil management in the event of future residential redevelopment of defined areas of the Site (Polygons; see **Figure 2**), and requirements for USEPA-approved vapor mitigation in the event of new building construction at defined areas of the Site (see **Figure 3**). Site soils have been remediated to non-residential (commercial/industrial) standards through various USEPA-approved interim actions and require no further action for commercial or industrial uses, for which the Site is zoned.

The groundwater remediation system on the Site has been in place since 1987 and has been updated periodically to enhance its effectiveness (i.e., most recently in 2009). Operation of this system has prevented the off-site migration of constituents of concern ("COCs") above maximum contaminant levels ("MCLs") and risk-based concentrations and will continue under the approved and updated Sampling and

[1] Gainesville Associates started its ownership interest in the Property as a Virginia General Partnership, but then converted in 2005 to Gainesville Associates, LLC, a Virginia Limited Liability Company (hereafter "Gainesville Associates").

Analysis Plan (TRC, 2015) and Groundwater Monitoring and Well Reduction Plan (TRC 2017), which governs monitoring groundwater and surface water at the Site.

Gainesville Associates has indicated its intention to eliminate any soils-related residential risks on the Gainesville Parcel it has retained, and has indicated that it has already eliminated such soils on the Sharpless Parcel it recently sold.[2] As such, the redevelopment of both the Sharpless Parcel (currently undergoing redevelopment) and the remainder Gainesville Parcel will eliminate any ecological risk at the Site.

1.2 Purpose of Institutional Control Plan

The Institutional Control Plan ("IC Plan") establishes the schedule and document the methods that will be used to record, implement and monitor compliance with the following use restrictions and requirements and ensure that they run with the land as appropriate:

1. Groundwater at the Facility shall not be used for any purpose, including, but not limited to, use as a potable water source, other than to conduct the maintenance and monitoring activities required by the Order.
2. The areas of the Facility defined by the Polygons may not be used for residential purposes unless it is demonstrated to USEPA that residential use does not pose a threat to human health and USEPA provides prior written approval that residential use is unrestricted.
3. Earth moving activities, including excavation, drilling and construction activities, shall be conducted in compliance with Facility-specific health and safety protocols;
4. A vapor intrusion control system, the design of which has been approved by USEPA, shall be installed in each new structure constructed above the shallow contaminated groundwater plume or within 100-feet around the perimeter of the contaminated groundwater plume, unless it is demonstrated to USEPA that vapor intrusion does not pose a threat to human health and USEPA provides prior written approval that no vapor intrusion control system is needed.
5. Compliance with the approved O&M, groundwater monitoring, and the associated Site-specific health and safety plans.

2.0 GROUNDWATER USE RESTRICTION AND IMPLEMENTATION

To prevent exposure to impacted groundwater at the Site that exceeds MCLs or risk-based concentrations (i.e., in the absence of updated MCLs), ARC will request Gainesville Associates as the owner of the Gainesville Parcel and Sharpless Exterprises, LLC as the owner of the Sharpless Parcel to record a Deed of Restrictive Covenants with the land records housed in the Office of the Clerk of the Circuit Court of

[2] Please note that Gainesville Associates reported to USEPA in September 2018 that it excavated and removed all soils from the Sharpless Parcel that did not meet residential risk standards, thus rendering the parcel suitable for unrestricted land use (SCS Engineers, 2018). Prior to this work, USEPA approved the ARC report concluding that it had achieved commercial/industrial standards at the Site in 2013 (Environ, 2013).

Prince William County that prohibits the use of groundwater at the Site for any purpose. Groundwater at the Facility shall not be used for any purpose, including, but not limited to, use as a potable water source, other than to conduct the maintenance and monitoring activities required by the CMI Order.

The groundwater use restriction for the Site will be implemented in cooperation with the property owners, Prince William County, and USEPA upon approval of the updated CMI Plan, of which this Institutional Control Plan is a part.

3.0 REQUIREMENT FOR SOIL MANAGEMENT

The supplemental HHRA prepared by ARC during the CMI and approved by the USEPA in October 2016 concluded that the CMI process has resulted in the safe use of the Site for commercial/industrial purposes with controls to mitigate exposure to contaminated groundwater, and to vapors beneath the property that may migrate at discrete locations on the Site into buildings that may be constructed in those areas of the property in the future. As such, soils at the Site meet the commercial/industrial standards and may be used for such purposes. The Site is currently zoned for heavy industrial use.

The areas of the Facility defined by the Polygons developed in the HHRA may not be used for residential purposes unless it is demonstrated to USEPA that residential use does not pose a threat to human health, and USEPA provides prior written approval that residential use is unrestricted. Polygons specifying land use areas that are not unrestricted as of the most-recent evaluation in 2016 are provided in **Figure 2**. The following approaches may be used to enable residential use of the Polygons:

- Since many of these Polygons are restricted because of the presence of perchlorate, which has been demonstrated to be attenuating to lower concentrations over time (Integral, 2016), demonstration through sampling that perchlorate concentrations have attenuated below residential risk management limits would satisfy USEPA (with its concurrence) as to future unrestricted use of the demonstrated area.
- Alternatively, unrestricted land use in the defined Polygons may be achieved by removing impacted soils from the Polygon and using the soil elsewhere (i.e., in demarcated commercial/industrial areas of the Site or disposing the soil off Site).

A Soil Management Plan ("SM Plan") has been prepared and is provided in **Appendix VI** of the CMI Plan. The purpose of the SM Plan is to present the process for the relocation of soils from defined Polygons at the Site to designated restricted areas so that residential development can occur in those defined Polygons at some undetermined time in the future. If Gainesville Associates chooses to remove all soils on the Gainesville Parcel (as reported to have been done on the Sharpless Parcel; SCS Engineers, 2018) by excavating and disposing all soils off-site that do not meet a residential risk standard, then the SM Plan is not necessary. However, if Gainesville Associates chooses to enable defined Polygons of the Gainesville Parcel to be used for residential development, then the SM Plan presents the process to meet this objective with USEPA approval.

Earth moving activities, including excavation, drilling and construction activities, shall be conducted in compliance with Facility-specific health and safety protocols. TRC's Health and Safety Plan for TRC activities at the ARC Site is provided in **Appendix VII** of the CMI Plan. Updated Health and Safety Plans would also be needed by TRC and others that address specific potential exposure pathways associated with planned work at the Site.

In the event that soils that exceed residential standards are excavated from defined Polygons and re-used elsewhere on Site, the excavated soil shall be re-used only where such use does not exceed potential exposure pathways at the new location. Appropriate records shall document the removal and relocation to support approval by USEPA.

4.0 REQUIREMENT FOR VAPOR INTRUSION CONTROL

Figure 3 identifies the area of the Site that exceeds one or more Vapor Intrusion Screening Levels for VOCs in groundwater and a 100-foot buffer around the area, based on sampling data from April 2018. This area includes groundwater in the shallow unconsolidated materials (i.e., saprolite and diabase bedrock) and groundwater in metasedimentary bedrock near the surface (i.e., north-central area of the Site), where the groundwater remedy is implemented.

A vapor intrusion control system, the design of which has been approved by USEPA, shall be installed in each new structure constructed above the shallow contaminated groundwater plume or within 100-feet around the perimeter of the contaminated groundwater plume, unless it is demonstrated to USEPA that vapor intrusion does not pose a threat to human health, and USEPA provides prior written approval that no vapor intrusion control system is needed. The following approaches may be used for new building construction:

- ARC will assure that each new structure (capable of containing contaminant vapors from the subsurface) in the defined area will be provided a vapor intrusion control system (e.g., vapor barrier, sub-slab depressurization system, or other suitable engineering control), with concurrence of the design by USEPA. USEPA acknowledges that this work is required in property that is not owned or under control of ARC, therefore ARC shall use its best efforts to complete this work in accordance with Section IX.B of the Administrative Order, U.S. EPA Docket RCRA-III-056-CA.
- Alternatively, since the volatile COCs are being treated in situ and/or are attenuating in place (depending on the location within the defined area), ARC may demonstrate to USEPA that a vapor intrusion control is not necessary at the planned location of the new building.

5.0 COMPLIANCE WITH CONTROLS

The final remedy at the Site relies upon ongoing groundwater remediation and monitoring conducted by ARC, an institutional control restricting the use of groundwater at the Site recorded with the deeds for the properties, requirements for USEPA-approved soil management in the event of future residential redevelopment of certain areas of the Site, and requirements for USEPA-approved vapor mitigation in the

event of new building construction at certain areas of the Site. Redevelopment of the Site on behalf of the property owners may be expected and necessitates that the final remedy be monitored for compliance.

5.1 Groundwater Use Restriction

ARC will monitor compliance with the groundwater use restriction at the Site:

- ARC will complete inspections at the Site during periodic monitoring events to observe whether any unauthorized uses of groundwater may be occurring. Authorized uses are restricted to those associated with operation, maintenance, and monitoring activities required by the CMI Order.
- ARC will interview the property owners annually to confirm that no unauthorized uses of groundwater are occurring at the Site.
- ARC will report its findings in the annual report for the Site.
- If ARC observes any evidence of noncompliance with the groundwater use restriction at the Site, ARC will bring this to the attention of the appropriate governmental agency or agencies, and request that action be taken.

5.2 Requirements for Soil Management and Vapor Intrusion Control

ARC will monitor compliance with the requirements for soil management and vapor intrusion control at the Site:

- ARC will complete inspections at the Site during periodic monitoring events to observe whether any soil management or vapor intrusion control requirements may have been implemented since the preceding inspection.
- ARC will interview the property owners annually to confirm that requirements for soil management and vapor intrusion control at the Site are being met.
- ARC will report its findings in the annual report for the Site.
- If ARC observes any evidence of noncompliance with requirements for soil management and vapor intrusion control at the Site, ARC will bring this to the attention of USEPA, and request that action be taken.

5.3 Compliance with the Approved Operation, Maintenance, and Monitoring Plans

ARC will monitor compliance with the approved operation, maintenance, and monitoring plans at the Site:

- ARC will summarize operation, maintenance, and monitoring activities at the Site during the calendar year.
- ARC will report its findings in the annual report for the Site, along with any recommendations for revision of the approved plan or update of the ongoing groundwater remediation system.

5.4 Termination of Controls

The groundwater use restriction and requirements for soil management and vapor intrusion control at the Site are intended to remain in place as long as required by USEPA pursuant to the CMI Order. There are currently no provisions in the CMI Order to terminate these controls at this time. However, if conditions change in the future that would eliminate the need for such controls, the property owner(s) and/or ARC will request that USEPA determine whether one or more controls can be terminated or modified.

6.0 REFERENCES

ENVIRON International Corporation. 2013. *RCRA Facility Investigation Soil Interim Measures Project Completion Report*. Atlantic Research Corporation Facility, Gainesville, Virginia. July 26, 2013.

Integral Consulting Inc., 2016. *Human Health Risk Assessment Addendum – Newly Collected Perchlorate Soil Data Analysis and Overall HHRA Findings*. Atlantic Research Corporation RCRA Corrective Action Site, Gainesville, Virginia. July 29, 2016.

SCS Engineers, 2018. *Soil Management Status Report*, Former ARC Facility, Gainesville, Virginia. September 6, 2018.

TRC Environmental Corporation. 2015. *Sampling and Analysis Plan*. Atlantic Research Corporation RCRA Corrective Action Site, Gainesville, Virginia. July 9, 2015.

TRC Environmental Corporation. 2017. *Groundwater Monitoring and Well Reduction Plan*. Atlantic Research Corporation RCRA Corrective Action Site, 5945 Wellington Road, Gainesville, Virginia 20155. July 18, 2017.

United States Environmental Protection Agency. 2016. *Approval of Human Health Risk Assessment*. Letter from Erich Weissbart to Brian Buniva. October 20, 2016.

FIGURES

Gainesville Parcel

Sharpless Parcel

Location Overview

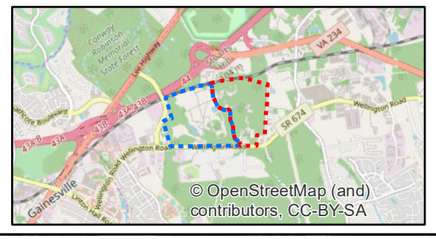

Site Features

- Gainesville Parcel
- Sharpless Parcel

500 250 0 500 Feet

N

Site Location Map

Atlantic Research Corporation, Gainesville, Virginia

TRC Environmental Inc.
11231 Cornell Park Drive
Cincinnati, Ohio 45242

Figure 1

Project: 229931.0000.0000 | 10/2/2018

G:\GIS_Projects\GIS_EEQUA\Gainesville\MXD\CMP\CMP-F01-20180227b.mxd

N

Location Overview

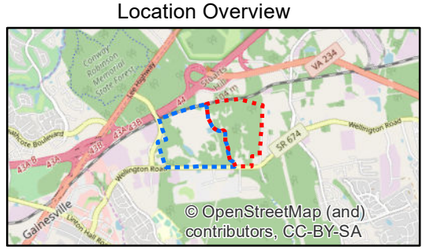

Legend

- Residential Perchlorate Polygons
- Residential Direct Contact Polygons
- Sharpless Parcel
- Gainesville Parcel

500 250 0 500 Feet

Notes:

Gainesville Associates excavated soil polygons on the Sharpless Parcel (SCS Engineers, 2018) [not shown].
Map based on Integral draft from 11/2/2017, which noted that residential direct contact soil management areas are derived from Figure 4-1E of the Baseline Human Health Risk Assessment for the Site (Environ 2012), and polygon shapefile provided by Integral (12/12/2018).
TRC grouped polygons and clarified some boundaries previously hidden by roads, buildings, and water.
Shapefile for the defined polygons will be submitted to USEPA separately.

Defined Polygons That May Require Soil Management at The Site

Atlantic Research Corporation, Gainesville, Virginia

TRC Environmental Inc.
11231 Cornell Park Drive
Cincinnati, Ohio 45242

Project: 229931.0000 | **12/13/2018**

Figure 2

G:\GIS_Projects\GIS_SEQUA\Gainesville\MXD\20181129 Polygons\Soil Polygons_20181212a.mxd

Location Overview

N

DW-32I
DW-29 S
DW-72B
DW-26 I
IW-6
DW-76-01
DW-28 I/D
BW TTU-03D
DW-13
(NDTS Ext Well)
SW 74-07
DW-15
BW 45-03 S
BW 14-02S
DW-18
SW 5-04
SW 40-07A
SW 40-57
BW 28-02S
BW-28-04 D
SW 47-02

Legend

VISL Vapor Intrusion Screening Level

- Exceedance of Groundwater VISL
- Vapor Mitigation Requirement Area
- Sharpless Parcel
- Gainesville Parcel

Notes: Vapor Intrusion Screening Level Calculator, Based on USEPA Residential Vapor Intrusion Screening Levels (May 2018) and EPA's Vapor Intrusion Screening Level (VISL) Calculator User's Guide for Chemical Contaminants (May 2018). The VISL values are the lower of the screening levels calculated at either a target cancer risk of 1E-5 or a target hazard quotient of 1. VISL screening analysis and screening values include:

PCE - 57.6 ug/L	12DCA - 22.4 ug/L	Benzene - 15.9 ug/L
TCE - 5.18 ug/L	11DCE - 195 ug/L	
11DCA - 76.4 ug/L	Vinyl Chloride - 1.47 ug/L	

Locations based on analysis of monitoring well sample depth and historical concentrations. Includes approximate 100 feet buffer around locations.
Labels indicate current sampling locations per the 2017 Groundwater Monitoring and Well Reduction Plan.
Shapefile for the defined area will be submitted to USEPA separately.

500 250 0 500
Feet

Defined Area That May Require Vapor Intrusion Mitigation at the Site
Atlantic Research Corporation, Gainesville, Virginia

TRC Environmental Inc.
11231 Cornell Park Drive
Cincinnati, Ohio 45242

Figure 3

Project: 229931.0000 | **12/13/2018**

G:\GIS Projects\GIS_SEQUA\Gainesville\MXD\CMP-F03_VISL_20181212A.mxd

APPENDIX VI

SOIL MANAGEMENT PLAN (CONTINGENT)

SOIL MANAGEMENT PLAN

SUBMITTED TO USEPA REGION III

By

Atlantic Research Corporation
5945 Wellington Road
Gainesville, Virginia 20155

October 3, 2018

Prepared By:

TRC Environmental Corporation
11231 Cornell Park Drive
Cincinnati, Ohio 45242
T: 513-489-2255

TABLE OF CONTENTS

EXECUTIVE SUMMARY 1

1.0 INTRODUCTION 2
1.1 Description of Final Remedy 2
1.2 Purpose of Soil Management Plan 3

2.0 BASIS FOR SOIL MANAGEMENT PLAN 3
2.1 Current and Potential Future Land Use 4
2.2 Human Health Risk Assessment 5

3.0 POLYGON SOIL MANAGEMENT AREAS 6

4.0 SOIL MANAGEMENT PLAN 6
4.1 Worker Health and Safety 7
4.2 Soil Management Options 8
4.2.1 Option 1: Redevelopment Design for Exposure Control 9
4.2.1.1 Avoiding Direct Contact Pathway in Polygons 9
4.2.1.2 Avoiding Homegrown Produce Ingestion Pathway in Polygons 9
4.2.2 Option 2: Soil Sampling and Reassessment 9
4.2.3 Option 3: Soil Management and Control Measures 10
4.2.3.1 Soil Excavation 10
4.2.3.2 Soil Stockpiling 10
4.2.3.3 Dust Control 11
4.2.3.4 Interim Grading 11
4.2.3.5 Backfill 11
4.2.3.6 Restoration 11
4.2.3.7 Soil Re-Use 11
4.2.3.8 Off-Site Soil Transportation and Disposal 12

5.0 DOCUMENTATION OF SOIL MANAGEMENT PLAN ACTIVITIES 12

6.0 REFERENCES 12

Table of Contents (cont.)

List of Figures

1: Site Location Map
2: Defined Polygons That May Require Soil Management at the Site

ACRONYMS

ARC	Atlantic Research Corporation
CMI	Corrective Measures Implementation
CMI Order	Corrective Measures Implementation Order
CMI Plan	Corrective Measures Implementation Plan
COC	Constituent of Concern
HAS Plan	Health and Safety Plan
HAZWOPER	Hazardous Waste Operations and Emergency Response
HHRA	Human Health Risk Assessment
IC	Institutional Control
IM	Interim Measure
OSHA	Occupational Safety and Health Administration
R&D	Research and Development
RCRA	Resource Conservation and Recovery Act
SM Plan	Soil Management Plan
SRFI	Supplemental RCRA Facility Investigation
TRC	TRC Environmental Corporation
TTF	Thermal Treatment Facility
USEPA	United States Environmental Protection Agency
VDEQ	Virginia Department of Environmental Quality
VESCH	Virginia Erosion and Sediment Control Handbook

EXECUTIVE SUMMARY

This Soil Management Plan ("SM Plan") is part of the Corrective Measures Implementation Plan ("CMI Plan") for the former Atlantic Research Corporation ("ARC") Facility located at 5945 Wellington Road, Gainesville, Virginia 20155 ("Site" or "Facility"). ARC signed a Final Administrative Order on Consent with the United States Environmental Protection Agency ("USEPA") in 1992 for Resource Conservation and Recovery Act ("RCRA") Corrective Measures Implementation ("CMI Order") at the now-former ARC facility, which is leased from Gainesville Associates, LLC. **Figure 1** shows the Site location and boundaries.

The SM Plan provides the process to manage defined areas of soil at the Site in the limited instance of actual residential redevelopment on discrete portions of the Site. The Site meets commercial/ industrial standards for soil and is zoned for industrial use, and therefore does not require a soil management plan for the existing zoned use. If soil management is required at the Site, this SM Plan provides the framework for limiting the amount of soil that would be required to be managed and beneficially reusing it on Site.

Gainesville Associates owned the entire 416-acre Site until it conveyed the eastern, approximately 181-acre portion in 2017 to Sharpless Enterprises, LLC ("Sharpless Parcel") for commercial redevelopment. The western approximately 235-acre parcel ("Gainesville Parcel") remains zoned for industrial use, unless and until Gainesville Associates achieves a change in zoning from Prince William County incorporating residential use. Such a zoning change and actual redevelopment of portions of the Gainesville Parcel for residential use would require the need for soil management of those discrete areas of the Gainesville Parcel that need to be managed for a potential residential exposure pathway. A total of approximately 13 acres of the Gainesville Parcel may require implementation of this SM Plan at discrete areas.

Gainesville Associates has indicated that for its own purposes, it wants to return the Site to unrestricted use regarding soils. According to Gainesville Associates, it has already eliminated all soils posing a risk to residential use on the Sharpless Parcel, thus rendering the parcel available for unrestricted use. The approach of cleaning up the Site to unrestricted use is not required under the RCRA Corrective Action.

1.0 INTRODUCTION

On October 20, 1992, Atlantic Research Corporation ("ARC") signed a Final Administrative Order on Consent for Corrective Measures Implementation ("CMI Order") at the now-former ARC facility leased from Gainesville Associates, LLC[1], located at 5945 Wellington Road, Gainesville, Virginia 20155 ("Facility" or "Site"). The CMI Order requires that corrective measures at the Facility follow a Corrective Measures Implementation Plan ("CMI Plan"). Since 1992, ARC has implemented the CMI Plan in various phases, and has documented the results in various reports including work plans, supplemental site investigation, risk assessment, and interim measure reports, and other documents that have been reviewed and approved by the United States Environmental Protection Agency ("USEPA"). The implementation of the CMI Plan has resulted in the remediation of hazardous substances on the Site to commercial/industrial standards for soil including perchlorate, volatile organic compounds, semi-volatile organic compounds, metals, energetic compounds, and polychlorinated biphenyls present in soil and groundwater.

In its June 14, 2018 letter, USEPA notified ARC that it has satisfactorily completed Interim Measures ("IMs") as set forth in the December 20, 2013 USEPA-approved IM Report to address perchlorate and other constituents of concern in soils at the Facility. Previously, USEPA approved ARC's Human Health Risk Assessment ("HHRA") in October 2016 that identified and defined specific areas of the Site (i.e., defined Polygons) that continued to exceed risk management levels for residential use. Given that contaminants remain in soil at the Facility above residential risk management levels, and at concentrations above risk-based standards in groundwater beneath the Facility, USEPA also requested that ARC update the CMI Plan to include a Soil Management Plan ("SM Plan") for USEPA review and approval. This SM Plan is part of the CMI Plan and, in conjunction with the Institutional Control Plan ("IC Plan"), provides the means to address potential residential exposure pathways at defined Polygons of the Site in the event that redevelopment occurs for residential purposes. The Site is zoned for industrial use and meets the applicable commercial/industrial standards for soil.

1.1 Description of Final Remedy

The final remedy for the Site consists of ongoing groundwater remediation and monitoring, an institutional control restricting the use of groundwater at the Site, requirements for USEPA-approved soil management in the event of future residential redevelopment of discrete areas of the Site, and requirements for USEPA-approved vapor mitigation in the event of new building construction at certain areas of the Site. Site soils have been remediated to commercial/industrial standards through various USEPA-approved interim actions and require no further action for the zoned industrial use.

[1] Gainesville Associates was started as a Virginia General Partnership, but then converted in 2005 to Gainesville Associates, LLC, a Virginia Limited Liability Company (hereafter "Gainesville Associates"). Gainesville Associates owned the entire 416-acre Site until it conveyed the eastern, approximately 181-acre portion in 2017 to Sharpless Enterprises, LLC ("Sharpless Parcel") for commercial redevelopment. The western approximately 235-acre parcel ("Gainesville Parcel") remains zoned for industrial use.

The groundwater remediation system has been in place since 1987 and has been updated periodically to enhance its effectiveness (i.e., most recently in 2009). Operation of this system has prevented the off-site migration of constituents of concern ("COCs") above maximum contaminant levels and risk-based concentrations and will continue under the approved and updated Sampling and Analysis Plan (TRC, 2015), and Groundwater Monitoring and Well Reduction Plan (TRC 2017), which governs monitoring groundwater and surface water at the Site.

Gainesville Associates has indicated its intention to eliminate any soils-related residential risks on the Gainesville Parcel it has retained and has indicated that it has already eliminated such soils on the Sharpless Parcel it recently sold. As such, the redevelopment of both the Sharpless Parcel (currently undergoing redevelopment) and the remainder Gainesville Parcel will eliminate ecological risk at the Site.

1.2 Purpose of Soil Management Plan

The SM Plan, in conjunction with the IC Plan, will ensure that:

1. The areas of the Facility defined by the Polygons (i.e., developed in the HHRA) may not be used for residential purposes unless it is demonstrated to USEPA that residential use does not pose a threat to human health and USEPA provides prior written approval that residential use is unrestricted; and
2. Earth moving activities, including excavation, drilling and construction activities, shall be conducted in compliance with Facility-specific health and safety protocols.

This SM Plan was prepared based upon the understanding that Gainesville Associates has expressed its intention to redevelop the Site for unrestricted residential use in certain undetermined locations at the Site. Gainesville Associates has stated that it intends to redevelop the Site as a mixed-use commercial and potential residential development; or to make the Site, or certain portions of the Site, suitable for unrestricted use. ARC is not responsible for the redevelopment of the Site to an unrestricted residential use; however, it has taken into account this desire by Gainesville Associates in its development of this CMI Plan, IC Plan, and SM Plan. The entire Site is currently zoned for industrial use, including the approximately 181-acre Sharpless Parcel, and has been so zoned since the initiation of the Prince William County Zoning Ordinance.

2.0 BASIS FOR SOIL MANAGEMENT PLAN

Site soils have been remediated to commercial/industrial standards through various USEPA-approved interim actions and require no further action for commercial or industrial uses, for which the Site is zoned.

This SM Plan presents the plan for relocating soils from the defined Polygons (**Figure 2**) for reuse in other defined areas on site so that residential development can occur in the defined Polygons in the future, if necessary. If Gainesville Associates chooses to remove all soils on the remaining Gainesville Parcel (as reported to have been done on the Sharpless Parcel; SCS Engineers, 2018) by excavating and disposing

all soils off site that do not meet a residential risk standard, then this SM Plan is not necessary. If, however, Gainesville Associates chooses to convert the defined Polygons of the Gainesville Parcel to compliance with a residential risk standard, then this SM Plan presents a process in which Gainesville Associates may accomplish its goal at its sole cost with USEPA approval.

2.1 Current and Potential Future Land Use

The Site is an approximately 416 acre parcel (separated into two parcels – approximately 181-acre Sharpless Parcel to the east and approximately 235-acre Gainesville Parcel to the west) located at 6201 Wellington Road and 5945 Wellington Road in Gainesville, Virginia, respectively. The Sharpless Parcel of the Site was conveyed by Gainesville Associates to Sharpless Enterprises, LLC in 2017 for redevelopment. The Site is bordered: on the north by Norfolk Southern Railroad right-of-way and Interstate 66; to the south by Wellington Road (Virginia Road 674), an outdoor amphitheater, and light industry; to the west by an asphalt and concrete manufacturing plant; and to the east by light industry.

The Site is currently inactive; the Facility was decommissioned by ARC in 2005-2006. No part of the Site is currently in use for any operational, research and development ("R&D"), storage, or manufacturing functions. Portions of the Site contain buildings, ultimately planned for demolition, which were formerly used by ARC for administrative/office functions, rocket testing, solid rocket propellant motor production, and R&D. The Facility also maintained a RCRA interim-permitted thermal treatment facility ("TTF") for energetic waste treatment on the northwest portion of the Site. The TTF was clean-closed and approval of closure of the TTF was granted by the Virginia Department of Environmental Quality ("VDEQ") Waste Permitting and Compliance Program on March 21, 2012.

An operating groundwater extraction and treatment system is located in the north-central portion of the property, on the eastern part of the Gainesville Parcel. The extraction system will likely be operating for the next several years.

Gainesville Associates filed a rezoning and special use application with Prince William County in June 2014 to rezone the Site from M-1 Heavy Industrial use to a Planned Mixed Residential District and Planned Mixed Development District in order to accommodate the proposed redevelopment of the Site into a mixed commercial/residential, transit-oriented community. This rezoning application was filed prior to the sale of the Sharpless Parcel. It is assumed that the pending application will need to be amended or withdrawn and refiled to address the Gainesville Parcel only.

Plans for redevelopment of the Gainesville Parcel may evolve in response to market conditions, public comment, and government approvals. As of the preparation of the SM Plan, redevelopment plans should be regarded as preliminary in terms of land uses in specific portions of the Site. Regardless of the ultimate redevelopment of the Gainesville Parcel, this SM Plan is designed to present the plan for the management of soils, which do not currently meet USEPA residential risk standards, for areas where residential uses may ultimately be located in the future.

2.2 Human Health Risk Assessment

The baseline risk assessment (Environ, 2012), which was prepared as part of the Supplemental RCRA Facility Investigation (Geosyntec, 2009, 2012) for the Site, evaluated the following on-site populations for potential exposure to soil under current and reasonably expected future land uses:

- Routine Workers;
- Maintenance Workers;
- Construction Workers;
- Trespassers;
- Recreators; and
- Residents.

The Risk Assessment Addendum – Analysis and Evaluation of Perchlorate Reduction in Soil and Recalculation of Homegrown Produce Risks (Integral, 2016a) and the Human Health Risk Assessment Addendum – Newly Collected Perchlorate Soil Data Analysis and Overall HHRA Findings (Integral, 2016b) further evaluated the risks presented for potential future resident exposure due to the presence of perchlorate in soils, and considered the likelihood for perchlorate concentrations to diminish over time.

The results of the baseline risk assessment and HRRA Addendum considered in the development of this SM Plan are summarized below:

- There are no known areas of the Site where soil concentrations pose hypothetical risks above USEPA's risk management limits when considering potential future routine worker, maintenance worker, construction worker, trespasser, or recreator exposure to soil.
- There are isolated areas scattered on the Site with soil or shallow groundwater concentrations, which could result in hypothetical risk levels above USEPA's risk management limits when considering potential future resident exposure to soil, for the following pathways:
    - Soil contact (in discrete areas of the Sharpless and Gainesville Parcels);
    - Soil vapor intrusion (in discrete areas of the Gainesville Parcel); and
    - Homegrown produce ingestion of perchlorate (in discrete areas of the Sharpless and Gainesville Parcels). Note that Gainesville Associates reported to the USEPA in September 2018 that they excavated and disposed off-site all soils from the Sharpless Parcel that did not meet residential risk standards, thus rendering the parcel suitable for unrestricted use.

The remaining areas of the Site with soil concentrations, which could result in hypothetical risk levels above USEPA's risk management limits when considering potential future resident exposure to soil, are used to identify the limits of the defined Polygons (**Figure 2**). Integral calculated that a perchlorate soil concentration of 3.7 μg/kg is needed to achieve an acceptable level of risk for future residents, if any, consuming homegrown produce. Most, if not all areas of the Site are expected to have concentrations of

perchlorate below this residential risk-based concentration in the next 10 years through natural attenuation.

3.0 POLYGON SOIL MANAGEMENT AREAS

Polygons identify areas of the Site where concentrations of COCs in soil may pose human health risks under residential land use conditions that exceed USEPA acceptable risk management limits, as determined in the HHRA. As agreed with USEPA and shown on **Figure 2**, the limits of each Polygon were defined as the area of a Thiessen polygon surrounding each of the soil sampling locations above the risk-based concentration. The Thiessen polygon is defined as being half the distance to the next nearest sample locations and is used to estimate the area associated with each Polygon. This methodology is considered a conservative approach as soils in the entire area of the Polygon are unlikely to exceed the risk-based concentration and can be refined through additional assessment. Each Polygon may be addressed by options presented in Section 4.

According to the most recent redevelopment plan, the Gainesville Parcel may be used for mixed commercial and residential development, which might include single family homes. The currently-planned use of the Sharpless Parcel is for non-residential redevelopment, and does not require implementation of this SM Plan to meet non-residential standards. In any event, Gainesville Associates verbally indicated that it has removed and disposed off-site all soils from the Sharpless Parcel necessary to meet an unrestricted residential standard.

4.0 SOIL MANAGEMENT PLAN

This SM Plan has been prepared with the understanding that redevelopment of the Site will be conducted, but specific plans for redevelopment have not been finalized for all areas and would require a zoning change for residential use as well as "prior written approval that residential use is unrestricted" from USEPA (USEPA, 2018). The intent of this SM Plan is to provide a framework that is flexible for the purpose of redevelopment while incorporating worker health and safety needs and options for soil management.

Work under this SM Plan will be implemented by Gainesville Associates or its designated contractor within the defined Polygons prior to or during redevelopment for residential land use (i.e., as indicated in Section 1.0, interim measures were previously completed to allow for continued use of the entire Site for commercial/industrial purposes). SM Plan-related work activities will likely include earth moving performed to support Site redevelopment (e.g., grading, excavating, trenching, stockpiling, removal of below grade slabs/structures, cut and fill activities, etc.); hauling of soils on the Site to stockpiling or redistribution areas; and the possible construction of landscaping or other beneficial soil reuse features (e.g., berms, backfilling, re-grading, barriers, etc.).

Gainesville Associates' implementation will be conducted by an earth moving and building demolition contractor under the oversight of a qualified environmental professional with knowledge of and

experience with local, state, and federal laws and regulations that may apply to Site redevelopment activities including environmental and construction management regulations (e.g., storm water and erosion and sediment control management), and general health and safety procedures. Based on known environmental conditions at the Site, the use of personnel trained and certified pursuant to OSHA 29 CFR 1910.120, HAZWOPER Training requirements (OSHA-certified) is recommended for work within the defined Polygons.

Based on completed investigations and remediation:

- There are no known hazardous wastes remaining at the Site;
- Perchlorate-affected soil is not a hazardous waste;
- There are no known materials potentially presenting an explosive hazard remaining at the Site (Environ, 2013);
- Former hazardous waste treatment and storage units have been closed and approved; and
- Known debris and highly-contaminated soil have been removed and disposed offsite as part of approved IMs.

4.1 Worker Health and Safety

A site-specific Health and Safety Plan (HAS Plan) shall be prepared to ensure that SM Plan activities are performed in a manner protective of the health and safety of site construction workers and of interim site users. An updated Site-specific HAS Plan for TRC is included as Appendix VII of the CMI Plan. Defined Polygons will be marked to identify those areas where soils need to be managed following the SM Plan and HAS Plan. These areas could be further refined, and some are likely to be reduced in size by additional soil sampling and characterization to be conducted prior to soil grading and excavation activities. As noted above, defined Polygons may ultimately include soils beneath existing buildings and subsurface utilities that will be tested after the buildings are demolished.

The HAS Plan will inform workers involved in the redevelopment of the Site of the health and safety procedures and protocols that need to be followed when managing soils that are removed from defined Polygons. The HAS Plan will also address contingency procedures and protocols to follow if unknown or unexpected soil conditions are encountered. Such conditions may be noted by visual or olfactory differences, or differences in physical composition from surrounding soils.

Elements of the HAS Plan will include:

- Designation of health and safety responsibilities among contractor staff;
- Health and safety training requirements;
- Medical monitoring requirements;
- Site characterization and hazard identification;
- Tailgate health and safety meetings;

- Air monitoring requirements, as warranted;
- Personal protective equipment, as warranted;
- Site control procedures; and
- Site emergency procedures.

4.2 Soil Management Options

As described in the Final Soil Interim Measures (IM) Report (Environ, 2013), ARC completed soil corrective measures necessary to allow commercial/industrial uses of the Site. The completion of these activities was approved by USEPA in a letter dated December 20, 2013, in which USEPA agreed that ARC had removed soils at the Site that were above risk-based concentrations of concern for commercial and industrial land uses. Soil management would only be necessary at portions of the Site with COCs above risk-based concentrations for residential land uses, where such uses are actually developed. The specific residential homegrown produce concentration for perchlorate was calculated to be 3.7 ug/kg by Integral (2016a).

As of the preparation of the SM Plan, redevelopment plans should be regarded as preliminary in terms of land uses in specific portions of the Site. This SM Plan provides for three options to mitigate potentially unacceptable exposures to soil associated with residential land use prior to redevelopment.

1. Design the redevelopment plan to provide control over the Polygons (**Figure 2**) to prevent exposures via the pathways of concern identified in the HHRA (e.g., siting of commercial use areas, positioning of parking lots, dedicated open spaces, etc.).
2. Resample the Polygons in the future when redevelopment plans are better understood to assess whether COC concentrations remain at levels of potential concern for unrestricted use (i.e., given potential fate and transport attenuation) and to verify the extent of the Polygon boundaries.
3. Excavate the soils from the Polygons (i.e., with or without reassessment under Option 2), and beneficially re-use on Site as fill or berms, or dispose off site at a licensed disposal facility, based on appropriate characterization.

Based on the establishment of the Polygons, which as previously discussed in Section 3.0 is conservative in nature, there is no requirement to conduct confirmatory sampling at Polygons under Option 1, or under Option 3 if the entire Polygon is excavated to the potential exposure depth and replaced with backfill meeting residential standards. Option 2 incorporates sampling to refine areas of potential concern and may be used in conjunction with Option 3.

In its preference to remove potential residential risk pathways in soil from the Sharpless Parcel, Gainesville Associates elected to use an approach that appears to be consistent with Option 3 herein. According to SCS Engineers (environmental professional for Gainesville Associates), Polygons on the Sharpless Parcel were excavated to bedrock, three feet, or to the extent of known soil impact, whichever was deeper (SCS Engineers, 2018). Some of this excavated soil was removed and disposed off-site at the

Lorton Landfill. Some of the soil was stockpiled (68 separate stockpiles) and characterized through composite sampling (i.e., initially stockpile quadrant compositing followed by incremental sampling) to determine whether unrestricted or potentially-restricted soil re-use would be available. Potentially-restricted soil was removed to the Gainesville Parcel for potential additional characterization and future use. Excavated soil that was characterized and confirmed as unrestricted was used to establish positive grades in disturbed areas of the Sharpless Parcel as part of the grading plan approved by Prince William County. Polygon locations and excavation area details were surveyed as part of the documentation process. SCS Engineers submitted its report to USEPA for approval.

4.2.1 Option 1: Redevelopment Design for Exposure Control

Under Option 1, the redevelopment plan will be designed, to the extent possible, to provide control over the Polygons (e.g., siting of commercial areas, positioning of parking lots, dedicated open spaces, etc.) to prevent or avoid potential exposures via the pathways of concern identified in the HHRA (i.e., direct contact, vapor intrusion and homegrown produce ingestion), as discussed in the following subsections.

4.2.1.1 Avoiding Direct Contact Pathway in Polygons

To prevent residential exposure via soil contact in Polygons, controls would include the placement of future residential properties outside of these areas. This alternative would apply to redevelopment in the Polygons shown as having potential residential direct contact risks on **Figure 2**.

4.2.1.2 Avoiding Homegrown Produce Ingestion Pathway in Polygons

To prevent residential exposure via homegrown produce ingestion, controls could include the placement of single-family residences outside of these areas, restrictions on the location of vegetable gardens, and/or requiring the use of elevated bed gardens following guidance developed by USEPA to address the concern of contaminant uptake into homegrown produce. This alternative would apply to buildings constructed in the Polygons having potential homegrown produce ingestion risks as shown on **Figure 2.**

4.2.2 Option 2: Soil Sampling and Reassessment

Under Option 2, relevant Polygons would be reassessed at the time of residential redevelopment to confirm the need for the measures specified in this SM Plan. Resampling of the Polygons would be completed prior to excavation to:

- Assess whether COC concentrations remain at levels of potential concern;
- Refine the lateral and vertical excavation boundaries of these areas, as warranted; and
- Document whether action may be, or is not warranted to address the potential exposure pathway resulting from planned redevelopment.

As part of the sampling program, a sample grid would be established to collect soil data to refine the lateral and vertical extent of potential excavation at distances ranging from 10 to 30 feet apart depending

on prior data and the size of the Polygon. Samples would be analyzed for the COCs that contribute most significantly to the residential land use risk estimates (i.e., primarily perchlorates). To assess whether the COC concentrations remain at levels of potential concern and/or to determine the refined extent of the Polygons, these data would be evaluated for residential soil direct contact or compared to a site-specific standard of 3.7 ug/kg of perchlorate relative to homegrown produce ingestion.

4.2.3 Option 3: Soil Management and Control Measures

Under Option 3, soil would be excavated to remove potential residential exposures to COCs within a Polygon as a result of planned redevelopment. Excavated soil would either be beneficially re-used on Site (e.g., engineered fill, landscape or boundary berms, etc.) and/or disposed off site at a licensed disposal facility, depending upon which method is deemed most economical. These activities will be completed in accordance with all applicable local, state, and federal requirements.

4.2.3.1 Soil Excavation

Soil excavation would be performed using standard construction techniques and equipment. The following steps will be completed prior to excavation activities:

- All applicable permits will be obtained in accordance with VDEQ and the Virginia Soil and Water Conservation Law related to Stormwater Management (4 VAC 50-60), and Erosion and Sediment Control (4 VAC 50-30) and Prince William County requirements;
- Decontamination facilities and silt and erosion control measures will be constructed, and roads stabilized as necessary;
- Underground utilities will be identified; and
- Excavation extents will be surveyed and flagged; and,
- A site-specific HAS Plan will be prepared for the planned activities.

4.2.3.2 Soil Stockpiling

Excavated soil can be directly transported to the designated Site re-use area, off-site disposal facility, or can be temporarily stockpiled before being transported to its final destination. It is anticipated that some excavated soils will be stockpiled in the Gainesville Parcel for further classification and potential re-use on Site (e.g., in a permanent berm area, as fill in commercial/industrial use areas; as unrestricted fill upon appropriate characterization).

Stockpiles will be constructed and operated in accordance with applicable local requirements for dust, storm water, and erosion and sediment control. The stockpiled soil cannot be located immediately adjacent to storm sewers or watercourses such that any runoff from the stockpile may end up the storm sewers or watercourses.

4.2.3.3 Dust Control

Although there is no identified risk to human health or the environment due to potential inhalation of chemicals from soils at the Site, reasonable efforts should be made to prevent or control the generation of nuisance dust during construction activities, and such dust management should be in accordance with Local, State and Federal laws and standards.

4.2.3.4 Interim Grading

Excavated Polygons may be backfilled with available on-Site soils and graded and stabilized in accordance with grading plans approved by Prince William County. Positive grades will be obtained such that excavated Polygons do not accumulate water.

4.2.3.5 Backfill

Once the Polygon excavation has been completed, the excavation will be backfilled or graded to minimize storm water control issues. Excavations may be backfilled with soil obtained from on-site borrow areas or from cut and fill operations to the extent practicable. The backfill will be placed in excavations in 1.5-ft, loose lifts and compacted by driving over the area with heavy equipment (e.g., bull-dozer, loaded off-road or over-the-road dump truck) until a firm and unyielding surface is achieved. Based on Site redevelopment requirements, more conservative engineering methods of lifts and grading may also be implemented. The disturbed area will be regraded to restore positive drainage that promotes sheet flow across the area.

4.2.3.6 Restoration

If restoration is necessary based on redevelopment plans, the upper six inches of fill will be tracked in using a dozer or other tracked piece of equipment so as to not excessively compact the material. Compaction using a roller or other compaction equipment will not be required. These areas will be permanently stabilized with grass seed and mulch immediately after final grading. The seed mix will vary depending upon the planting season in accordance with Chapter 3, Section 3.32 of the Virginia Erosion and Sediment Control Handbook (VESCH; VDEQ, 1992). Following seeding, mulch will be applied to seeded areas in accordance with Chapter 3, Section 3.35 of the VESCH, to help with permanent stabilization and prevent erosion.

4.2.3.7 Soil Re-Use

Soils excavated from Polygons may be re-used on Site as general fill in portions of the Gainesville Parcel that are developed for commercial and industrial purposes, and may also be incorporated into landscape berms (e.g., along the northern property boundary to provide a buffer between the redeveloped land and the existing active railroad) or beneath hardscape or structures in other portions of the Gainesville Parcel.

Based on additional sampling and analysis (e.g., incremental sampling, or other approved composite sampling approach), excavated and stockpiled soils may be reused without restriction in the Gainesville

Parcel. For example, if representative samples of stockpiled soils are found not to contain COCs above USEPA's risk management limits when considering potential future resident exposure to soil, that portion of soils may be used on the Gainesville Parcel without the application of institutional controls. Soils with perchlorate concentrations at or below 3.7 ug/kg may be re-used without restriction provided no other COCs above risk-based criteria are present.

4.2.3.8 Off-Site Soil Transportation and Disposal

Any soil that is transported off-site for disposal will be characterized, managed and disposed of in accordance with all applicable Federal and State regulations.

5.0 DOCUMENTATION OF SOIL MANAGEMENT PLAN ACTIVITIES

The movements and consolidation of soils from Polygons to soil stockpiles or to offsite disposal locations will be documented in a report that will be submitted to USEPA. The following will be documented in the report:

- Polygon location identification (e.g., original soil boring location ID);
- Sampling results used to refine the limits of the Polygon;
- Date of excavation;
- Dimensions of soil excavation;
- Disposition of excavated soil (e.g., soil stockpile, ultimate location of soil reuse or offsite disposal); and
- Record of any suspect hazardous debris identified and removed from the site, including documentation of disposal.

Implementation of this SM Plan is expected to take place in stages.

6.0 REFERENCES

Environ, 2012, *RCRA Facility Investigation, Baseline Risk Assessment,* Atlantic Research Corporation Facility, Gainesville, Virginia, November 2, 2012.

Environ, 2013, *RCRA Facility Investigation, Soil Interim Measures Project Completion Report*, Atlantic Research Corporation Facility, Gainesville, Virginia, July 26, 2013.

Geosyntec, 2009, *Final Supplemental RCRA Facility Investigation Report,* Atlantic Research Corporation Facility, Gainesville, Virginia, November 30, 2009.

Geosyntec, 2012, *Addendum to the Final SRFI Report,* Atlantic Research Corporation Facility, Gainesville, Virginia, October 10, 2012.

Integral Consulting, Inc. 2016a. *Risk Assessment Addendum – Analysis and Evaluation of Perchlorate Reduction in Soil and Recalculation of Homegrown Produce Risks*, Atlantic Research Corporation RCRA Corrective Action Site, Gainesville, Virginia, June 9, 2016.

Integral Consulting, Inc. 2016b. *Human Health Risk Assessment Addendum – Newly Collected Perchlorate Soil Data Analysis and Overall HHRA Findings*, July 2016.

SCS Engineers, 2018. *Soil Management Status Report*, Former ARC Facility, Gainesville, Virginia. September 6, 2018.

TRC Environmental Corporation. 2015. *Sampling and Analysis Plan*. Atlantic Research Corporation RCRA Corrective Action Site, Gainesville, Virginia. July 9, 2015.

TRC Environmental Corporation. 2017. *Groundwater Monitoring and Well Reduction Plan*. Atlantic Research Corporation RCRA Corrective Action Site, 5945 Wellington Road, Gainesville, Virginia 20155. July 18, 2017.

United States Environmental Protection Agency. 2018. *Remedy Implementation Letter, from Erich Weissbart (USEPA) to Brian Buniva (ARC)*. June 14, 2018.

Virginia Department of Environmental Quality (VDEQ). 1992. *Virginia Erosion and Sediment Control Handbook*. Third Edition.

Virginia Department of Environmental Quality (VDEQ). 2012. Solid Waste Guidance Memorandum. Division of Land Protection & Revitalization State-Wide Guidance Memo No. LPR-SW-04-2012. *Management and Reuse of Contaminated Media*. From Jeffery Steers, Director, Division of Land Protection and Revitalization to Regional Land Protection & Revitalization Managers, July 17, 2012.

FIGURES

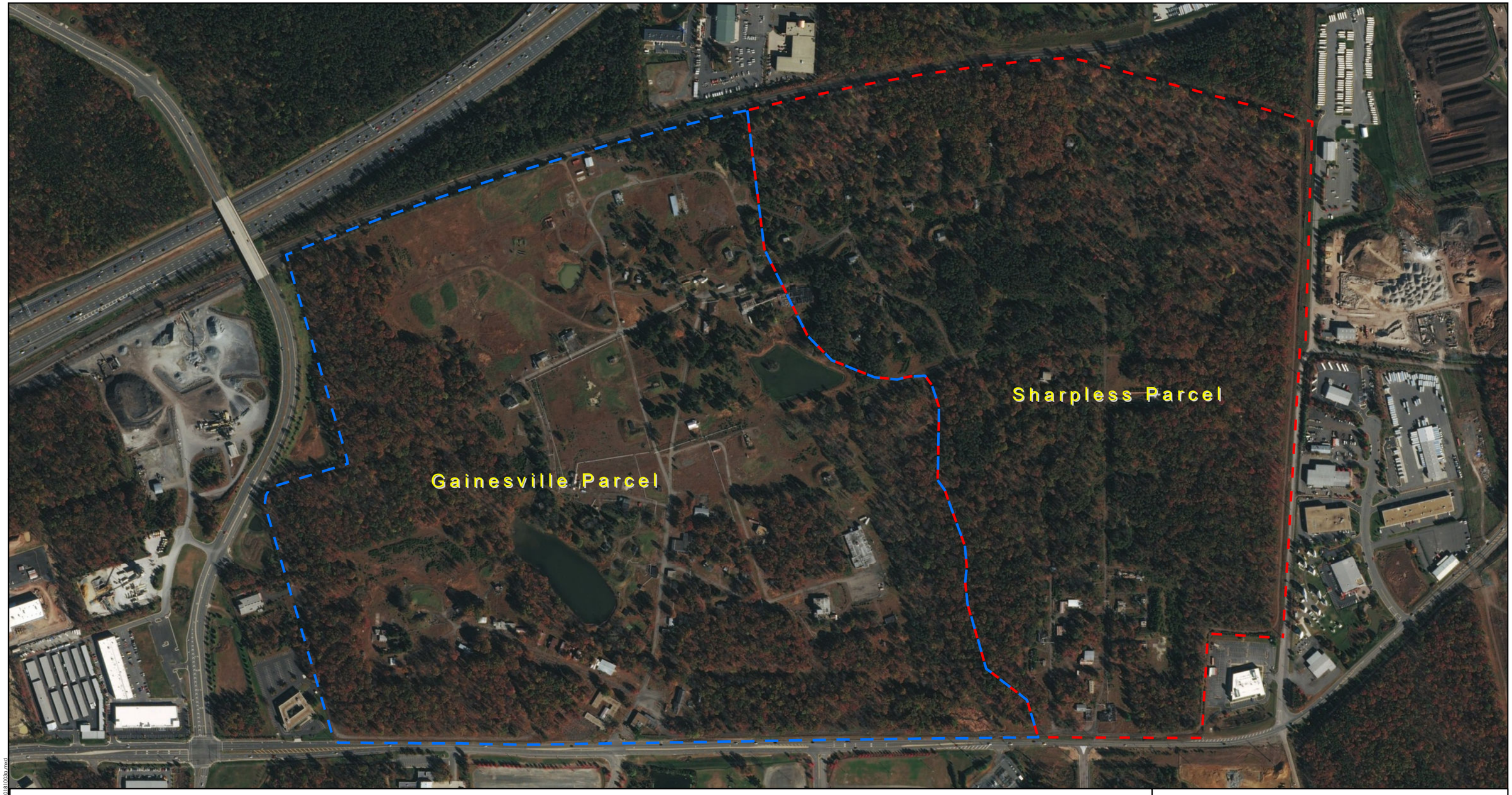

Location Overview

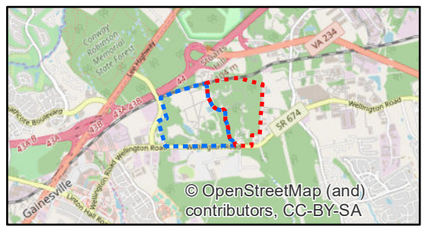

Site Features

- Gainesville Parcel
- Sharpless Parcel

500 250 0 500 Feet

N

Site Location Map

Atlantic Research Corporation, Gainesville, Virginia

TRC Environmental Inc.
11231 Cornell Park Drive
Cincinnati, Ohio 45242

Project: 229931.0000.0000

10/3/2018

Figure 1

G:\GIS_Projects\GIS_EEQUA\Gainesville\MXD\SMP\SMP-FIG-20180003o.mxd

N

Location Overview

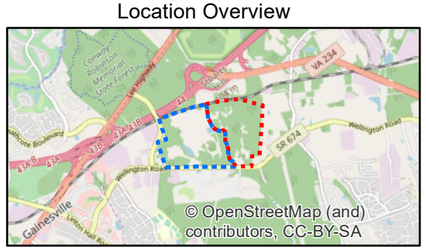

Legend

- Residential Perchlorate Polygons
- Residential Direct Contact Polygons
- Sharpless Parcel
- Gainesville Parcel

500 250 0 500 Feet

Notes:

Gainesville Associates excavated soil polygons on the Sharpless Parcel (SCS Engineers, 2018) [not shown].
Map based on Integral draft from 11/2/2017, which noted that residential direct contact soil management areas are derived from Figure 4-1E of the Baseline Human Health Risk Assessment for the Site (Environ 2012), and polygon shapefile provided by Integral (12/12/2018).
TRC grouped polygons and clarified some boundaries previously hidden by roads, buildings, and water.
Shapefile for the defined polygons will be submitted to USEPA separately.

Defined Polygons That May Require Soil Management at The Site

Atlantic Research Corporation, Gainesville, Virginia

TRC Environmental Inc.
11231 Cornell Park Drive
Cincinnati, Ohio 45242

Project: 229931.0000 | **12/13/2018**

Figure 2

G:\GIS_Projects\GIS_SEQUA\Gainesville\MXD\20181129 Polygons\Soil Polygons_20181212a.mxd

APPENDIX VII

HEALTH AND SAFETY PLAN

HEALTH AND SAFETY PLAN

SUBMITTED TO USEPA REGION III

For

Atlantic Research Corporation
5945 Wellington Road
Gainesville, Virginia 20155

October 3, 2018

Prepared By:

TRC Environmental Corporation
11231 Cornell Park Drive
Cincinnati, Ohio 45242
T: 513-489-2255

TABLE OF CONTENTS

DIRECTIONS TO HOSPITAL **1**

PART 1 – HAZARD EVALUATION

1.0 INTRODUCTION AND APPLICABILITY **3**

2.0 SITE BACKGROUND **3**

3.0 EMERGENCY CONTACT INFORMATION **5**

4.0 SITE CHARACTERIZATION **6**

5.0 HAZARD EVALUATION **7**
5.1 Constituents of Concern 7
5.2 Historical Chemical Hazards 7
5.3 Physical Hazards 8
5.4 Biological Hazards 18

PART 2 – HEALTH AND SAFETY PLAN

6.0 GENERAL INFORMATION **22**

7.0 CONSTRUCTION TASKS **23**

8.0 APPLICABLE SAFETY STANDARDS OR REGULATIONS: **24**

9.0 TRAINING REQUIRED **25**

10.0 MEDICAL SURVEILLANCE **26**

11.0 PERSONAL PROTECTIVE EQUIPMENT (PPE) **27**

12.0 AIR MONITORING **28**

Table of Contents (cont.)

PART 2 – HEALTH AND SAFETY PLAN (cont.)

13.0 SITE CONTROLS AND WORK ZONES 29

14.0 DECONTAMINATION PROCEDURES 30

15.0 DISPOSAL OF INVESTIGATION-DERIVED MATERIAL 30

16.0 WORK LIMITATIONS 30

17.0 RADIATION SAFETY 31

18.0 ACKNOWLEDGMENT STATEMENT 31

19.0 FIELD OBSERVATION DOCUMENTATION 32

List of Figures

1: Site Location
2A: Directions to Hospital
2B: Directions to Urgent Care

List of Appendices

I: Forms

ACRONYMS

ARC	Atlantic Research Corporation
HAS	Health and Safety
RCRA	Resource Conservation and Recovery Act
SHSO	Site Health and Safety Officer
TRC	TRC Environmental Corporation
USEPA	United States Environmental Protection Agency

DIRECTIONS TO HOSPITAL

Hospital: **PRINCE WILLIAM HOSPITAL**
(703) 369-8000
8700 Sudley Road
Manassas, VA
(see attached map)

ROUTE TO HOSPITAL

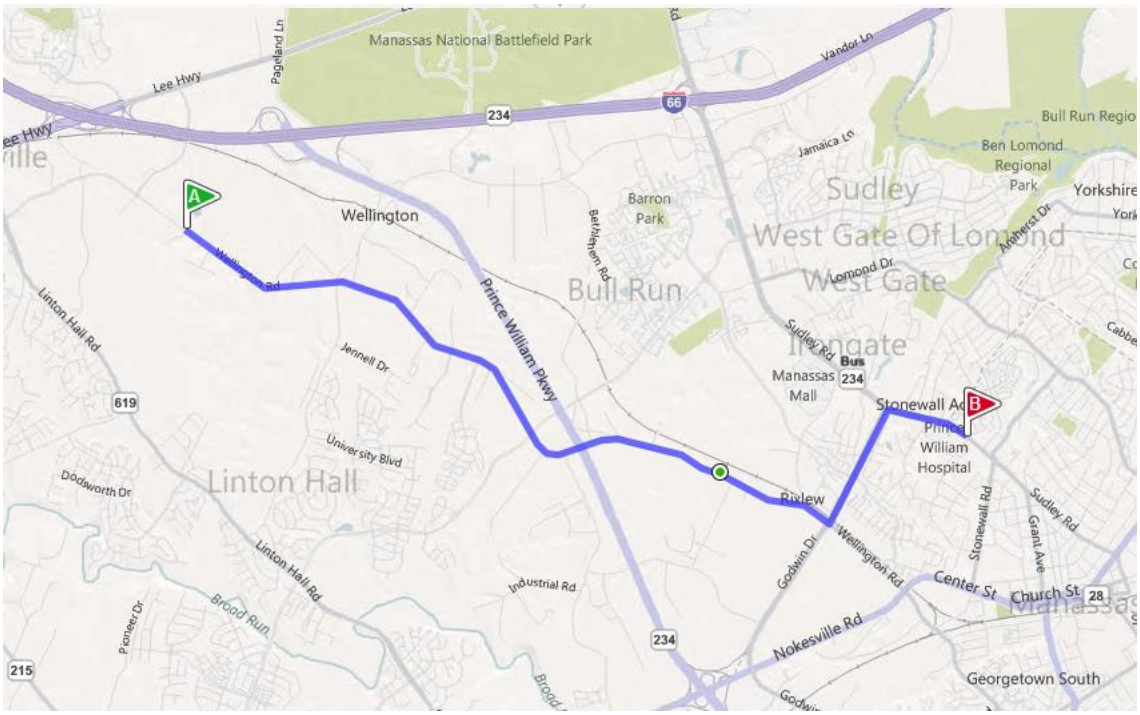

Written Directions to Hospital from Site:

Turn left out of the site onto Wellington Road (5.3 mi.). Turn left onto Godwin Drive (0.9 mi). Turn right onto SR-234 Bus South / Sudley Road (0.6 mi.).

Total Distance: 6.8 miles **Estimated Travel Time: 18 min.**

ROUTE TO URGENT CARE FACILITY

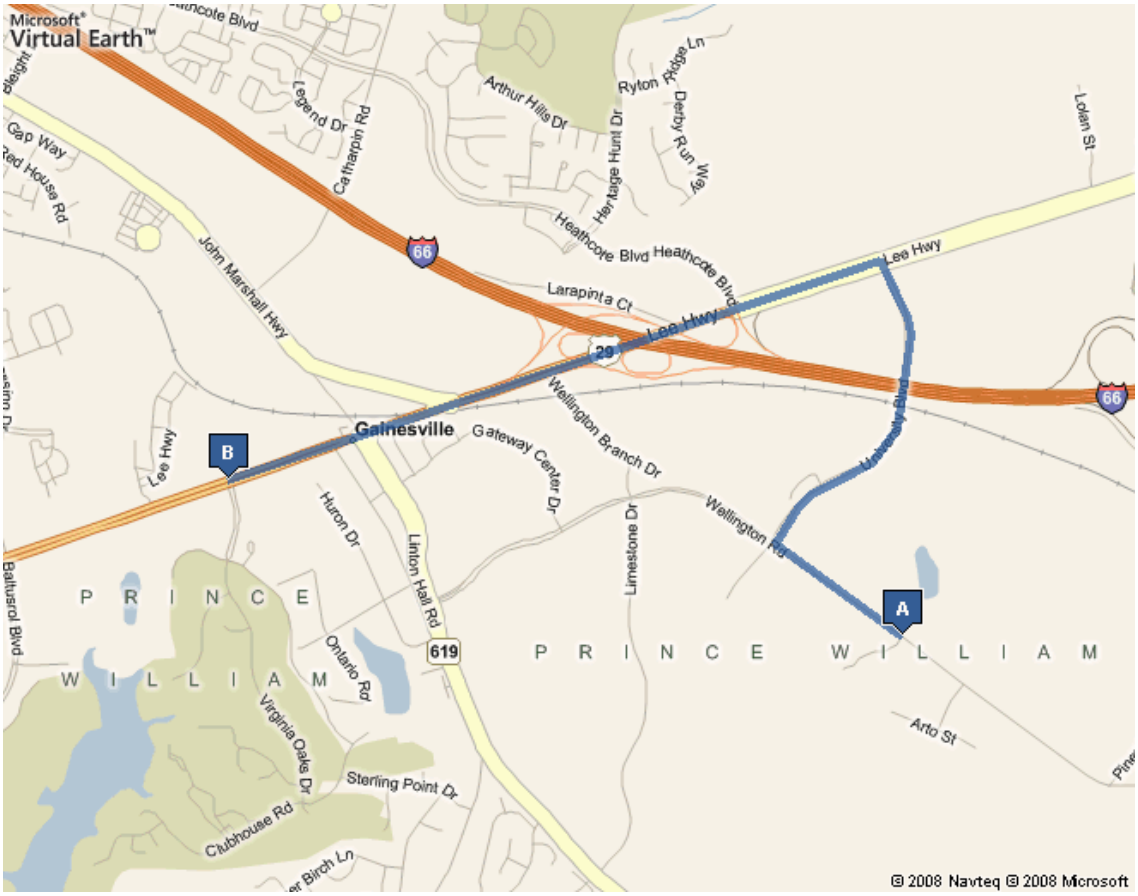

GAINESVILLE URGENT MEDICAL CARE

(703) 753-7797
7588 Gardner Park Drive
Gainesville, Virginia 20155

Written Directions to Urgent Care Facility from Site:

Turn right out of the site onto Wellington Road (0.4 miles). Turn right onto University Boulevard (0.9 miles). Turn left onto US-29 South / Lee Highway (1.9 miles). Turn right on Gardner Park Drive (0.1 miles).

Total Distance: 3.3 miles **Estimated Travel Time: 5 min.**

1.0 INTRODUCTION AND APPLICABILITY

This Health and Safety Plan ("HAS Plan") has been prepared by TRC Corporation ("TRC") for the former Atlantic Research Corporation ("ARC") facility located at 5945 Wellington Road, Gainesville, Virginia 20155 ("Facility" or "Site").

The Site is approximately 416 acres in area and is zoned for heavy industrial use. The property on which the former ARC Facility was located has been owned by Gainesville Associates since 1976. In 2017, approximately 181 acres of the original parcel was acquired from Gainesville Associates by Sharpless Enterprises, LLC for commercial/industrial use (referred to as the Sharpless Parcel; the remainder of the original parcel is referred to as the Gainesville Parcel).

The Site is currently vacant, secured by fencing with a gated and locked entrance, and undergoing redevelopment. Groundwater remediation is being conducted in the north central part of the Site on the Gainesville Parcel. Periodic groundwater monitoring is conducted on the Site. Redevelopment is being conducted by Gainesville Associates on the Sharpless Parcel with the intent to also redevelop the Gainesville Parcel.

This HAS Plan will be kept onsite during field activities and will be reviewed as necessary. The HAS Plan will be revised as project activities or conditions change or when supplemental information becomes available. All personnel working on hazardous operations or in the area of hazardous operations shall read and be familiar with this HAS Plan before doing any work. All project personnel shall sign the certification page acknowledging that they have read and understand this HAS Plan. Changes in the scope of the project or introduction of new hazards to the project shall require revision of the HAS Plan and approval by the Project Manager.

This HAS Plan defines the procedures and requirements for the health and safety of TRC staff and ARC visitors when they are physically on the Site.

In addition, Subcontractors and tiered subcontractors shall follow any of their company HAS programs.

This HAS Plan does not apply to the third-party contractors, their workers, their subcontractors, their visitors, or any other persons not under the direct control or custody of TRC. Information provided in this HAS Plan may be used by others in the development of their own HAS Plans.

2.0 SITE BACKGROUND

The Facility has undergone RCRA[1] Corrective Action to address soil and groundwater impacts from the historic management of certain hazardous substances including perchlorate, volatile organic compounds, semi-volatile organic compounds, metals, energetic compounds, and polychlorinated biphenyls on the

[1] RCRA = Resource Conservation and Recovery Act

Site. ARC and predecessors operated the Facility as a solid fuel rocket propellant and rocket motor production Facility primarily under contracts with the United States Department of Defense ("DOD") from 1951 to 2005, when the Facility was decommissioned.

Investigative activities and significant soil and groundwater remediation has been accomplished through completed soil and groundwater corrective and interim actions beginning in the 1980s. Groundwater remediation remains ongoing at the north-central portion of the Site (on the Gainesville Parcel) with performance monitoring on Site at downgradient locations. Constituents of concern meet risk-based cleanup standards in groundwater at the downgradient property boundary and there has been no off-site groundwater or surface water contamination migration detected. Soil interim actions achieved commercial/industrial standards at the Site as approved by USEPA[2] in 2013. The Human Health Risk Assessment was approved by USEPA in 2016.

There are no unacceptable health risks from current exposures to any environmental media at or around the Site. Remaining potential future exposure pathways (depending upon future use) are:

- Groundwater at portions of the Site may pose future worker risk if contacted during excavation activities.
- There are isolated areas of the Site with soil concentrations, which could result in hypothetical risk levels above USEPA's risk management limits for residential use for the following pathways:
    - Soil contact (in discrete areas of the Gainesville and Sharpless Parcels); however, the 181-acre Sharpless Parcel is being put to commercial/industrial use. Nevertheless, Gainesville Associates undertook soil removal measures to remove any such current or future risks to the Sharpless Parcel during 2018.
    - Homegrown produce ingestion of perchlorate (in discrete areas of the Gainesville and Sharpless Parcels); however, the 181-acre Sharpless Parcel is being put to commercial/industrial use making any residential uses and ingestion of produce from gardens unlikely. Nevertheless Gainesville Associates undertook soil removal measures to remove any such current or future risks to the Sharpless Parcel during 2018.
    - Soil vapor intrusion (in discrete areas of the Gainesville Parcel).

[2] USEPA = United States Environmental Protection Agency

3.0 EMERGENCY CONTACT INFORMATION

Emergency Contacts*	
TRC Program Manager	Dan Weed 513.489.2255 (office)
TRC Project Manager (PM)	Geoff King 513.489.2255 (office)
TRC Field Contact	John Lair 513.489.2255 (office)
TRC Operation and Maintenance Contact	Jim Kirlin 864.281.0030 (office)
TRC Technical Contact	Mike Woodruff 513.489.2255 (office)
TRC Health & Safety Coordinator (HSC): – Excavation Permits – Hot Work Permits – Lockout/Tagout Permits – Traffic Control Plan Approval – Lighting Plan Approval	Curt Kugler 513.489.2255 (office)
TRC National Safety Director: – Confined Space Permits – Air Monitoring Plans – Scaffolding Permits – Demolition Plan Approval	Mike Glenn [upon request]
TRC Health and Safety Leader	David Sullivan [upon request]
Radiation Safety Officer (RSO)	John Hanson [upon request]
Contractor Contact	N/A
Client Contact	Sequa Corporation [upon request]
TRC Legal Contact	Andy Johnson [upon request]

*Office contact information provided; additional contact info to be provided upon request. A field task specific HAS Plan would include detailed contact information for the above personnel.

TRC personnel are responsible for completing tasks safely, and reporting any unsafe acts or conditions to their supervisor. No person may work in a manner that conflicts with these procedures. Prior to initiating site activities, all TRC and subcontractor personnel will receive training in accordance with applicable regulations, and be familiar with the requirements and standards referenced in this HAS Plan. In addition, all personnel will attend daily safety meetings (tailgate meetings) to discuss site-specific hazards prior to beginning each day's work. Every TRC employee, subcontractor, and client representative at the Site has the responsibility to stop the work of a coworker or subcontractor if the working conditions or behaviors are considered unsafe.

The Project Manager is responsible for verifying that project activities are completed in accordance with the requirements of this HAS Plan.

The Site Health and Safety Officer ("SHSO") is the TRC field leader and has overall responsibility for implementation of HAS Plan at the Site.

4.0 SITE CHARACTERIZATION

Client Requirement(s)[1]:	☒ None	☐ Site Orientation	☐ H&S Orientation
	☐ Permits or Other Requirements (specify and attach, if available):		
Site Information:	☒ Map/Diagram (attach)	☐ Map/Diagram Unavailable	
	☒ Inactive Site	☐ Active Site (specify below)	
General Environmental Concerns:	☒ Contaminated Water	☐ Wastewater	☐ Dust
	☒ Contaminated Soil	☐ Solid Waste	☐ Noise
	☐ Contaminated Air	☐ Waterways	☐ Other
Site Security/Access Control:	☐ None	☒ On Site	
	☐ Other (explain)		
Amenities Available for Work:	☐ None	☒ Waste Storage	☒ Restrooms
	☒ Tools/Equipment Storage	☒ Office/Trailer Space	☒ Supplies Storage
Utilities Available For Work:	☐ None	☒ As Listed: Water, electric	
Medical Services Available:	☒ None On Site	☐ As Listed:	
Facility Alarms/Signals:	☒ None	☐ As Listed:	
Traffic/Parking/Railway Issues:	☐ None	☒ As Listed (On-Site/Off-Site): On-site	
☐ Permits Required (specify)[2]:	☐ TRC	☐ Local	☐ State
	☐ Federal	☐ Other	☒ N/A
☐ Utility Locate Service(s):	☐ On Site	☐ Client	☐ Other
	☐ Off Site	☐ Diggers Hotline	☐ One Call
		☐ Julie, Inc.	☒ N/A

[1] If relying on the client for any specific hazard identification and control, implemented control and effectiveness should be documented prior to beginning any work activities. This is recommended for all field projects.

[2] Permit examples: Utilities (electrical, water, gas, etc.); Excavations; Explosives; Cranes; Burning; Fuel storage; Traffic control; Hoists; Cutting; Welding; Demolition; Confined space; Restricted access areas; etc.

5.0 HAZARD EVALUATION

5.1 Constituents of Concern

The primary COCs that may be encountered during the annual and semi-annual groundwater and surface water sampling events are perchlorate and specific volatile organic compounds as shown below.

- Perchlorate
- 1,1,1-Trichloroethane
- 1,1,2-Trichloroethane
- 1,1-Dichloroethane
- 1,1-Dichloroethene
- 1,2,3-Trichloropropane
- 1,2-Dichloroethane
- Benzene
- Carbon Tetrachloride
- Chloroethane
- cis-1,2-Dichloroethene
- Methylene Chloride
- Tetrachloroethene
- Trichloroethene
- Vinyl Chloride
- 1,4-Dioxane

PCBs were previously sampled at the Site and represent a risk in soil at a localized area.

5.2 Historical Chemical Hazards

Previous remediation activities at the Site addressed other potential Contaminants of Concern. Although these contaminants were removed from the locations in which they were found, they are listed here as historical COCs. The previously remediated contaminants include the following:

- Explosive or energetic materials
- Beryllium
- Incapacitating Agent BZ
- Nerve Gas Agents GB and VX
- Tear Gas Agent CS
- Various Lab Wastes
- Tetranitromethane
- Tetrafluorohydrazine

- Cobalt-60
- Fuel Oil

It is not expected that workers will be exposed to radiological hazard so radiological screening will not be performed unless radiological material is encountered on site.

General safe practices related to chemical hazards include standing up-wind of contaminated areas whenever possible, avoiding walking through discolored areas or puddles, not leaning on drums, and avoiding contact with anything that is likely to be contaminated. The SHSO or his designee and the Site Representative should be contacted immediately in the event of encountering any unknown material, particularly if buried and even if it appears to be innocuous (e.g., garbage bag).

5.3 Physical Hazards

Periodic Groundwater Monitoring

Groundwater sampling, surface water sampling, and water level measurements are conducted by TRC personnel at monitoring wells and surface water sampling locations across the Site on a semi-annual basis in the Fall and Spring of each year. Sampling vehicles and generators are utilized to access and sample locations where natural biological hazards may be present. (See common physical hazards and biological hazards below.)

Sampling activities may encounter primary COCs in water that may represent a direct contact risk. Level D personal protective equipment is warranted.

Operation and Maintenance

Operation and maintenance of the groundwater remediation system is conducted weekly by a subcontractor (Environmental Systems Service, Ltd) to TRC. Activities are performed at the extraction well, remediation building, amendment addition area, and injection well locations. Activities involve monitoring and upkeep of equipment including energized components. A maintenance vehicle and a forklift are utilized to facilitate activities where natural biological hazards may be present. (See common physical hazards and biological hazards below.)

The following requirements should be followed when conditions warrant.

- Lock Out/Tag Out Procedures when opening electrical panels and pumps
- Confined Space Entry – absolutely no confined space entry (permitted confirmed space or non-permitted) without prior written authorization from project management
- Electrical work – no electrical work shall be performed without written authorization from project management. Panels shall be de-energized prior to opening unless otherwise authorized by project management

- Fall Protection – safety harnesses, approved scaffolding, secured ladders, etc. must be utilized if work above four feet above local floor or near open pits or trenches is performed
- Respiratory Protection – areas shall not be accessed if respiratory protection is required without written prior authorization from project management
- Insect Repellent – insect repellent shall be worn at all times onsite during months where insect activity (e.g. ticks, mosquitoes, etc.)
- PPE – proper PPE must be worn for the tasks being performed (e.g. face shield / safety glasses when changing filter bags; long pants, sleeves, and face shield when using the weed string trimmer, safety glasses and cut resistant gloves at all times, etc.)
- Hazard Communication – no new chemicals are allowed onsite without written authorization, have SDSs available for all site materials, understand where SDSs are maintained
- Project Communication – the site is remote, having communication with others is important, establish procedures for routine check-ins and what to do if a check-in is missed

Operation and maintenance activities may encounter primary COCs in water that may represent a direct contact risk. Level D personal protective equipment is warranted.

Well Abandonment

Well abandonment is conducted by TRC personnel in conjunction with a drilling subcontractor at monitoring well locations at the Site on an as-needed basis. Field vehicles and a drilling rig are utilized to abandon wells at locations where natural biological hazards may be present. TRC activities involve observation at locations utilizing a drilling rig and support vehicles. (See common physical hazards and biological hazards below.)

Abandonment activities may encounter primary COCs in water that may represent a direct contact risk. Level D personal protective equipment is warranted.

Excavation

General excavation activities that may be completed on-Site are related to redevelopment of the Site and are not expected to include on-Site activities by TRC Staff. However, due to the on-going construction activities that may be occurring on-Site, TRC Staff should be aware of open excavations and trenching during other Site field work. TRC staff should be cautious of their surrounding and should not enter areas where construction activities are occurring or have recently occurred. (See common physical hazards below.)

Excavation activities may encounter primary COCs in soil and groundwater that may represent a direct contact risk. Level D personal protective equipment is warranted.

Common Physical Hazards (modify as needed, but include with all project hazard assessments)

☒	Physical Hazard	General Control Measure
☐	Aboveground Storage Tanks (AST)	Be aware of any above ground storage tanks and the type of material being stored in them. Be aware of the potential of spills, fires, explosions, etc., while working near the tanks. Stay clear of tanks whenever possible, and be aware of any equipment operators near the tank(s).
☒	Animals (dogs, etc.)	Be aware of any animals on site or adjacent to the site. Appropriate care should be taken if any feral (wild) animals are encountered.
☐	Blasting/Explosives	TRC personnel shall not handle any explosive devices or materials. TRC personnel should understand the blasting procedures being used by the subcontractor, and all of the associated health & safety precautions. The subcontractor shall handle, store, and use the explosives in accordance with 29 CFR 1926.900, Subpart H and U.
☐	Boat or Barge	A boat or barge should be used that is adequately stable for the type of activity conducted. The boat or barge should have all of the appropriate and current licensing and registrations required by the applicable regulatory agencies. All applicable laws and regulations will be followed when launching the boat or barge, and when navigating to and from the work site. Personal floatation devices should always be worn while navigating the boat or barge. The boat must be equipped with the following approved United States Coast Guard (USCG) safety equipment: − A Type I, II, or III personal flotation device (PFD) for every person aboard (should be worn while navigating) The following equipment is recommended: − A Type IV throwable PFD − Audible distress signal device (air horn, whistle) − Fire extinguisher (if engine-propelled) − Auxiliary propulsion (spare paddles, trolling motor) − Bow and stern lines − Anchor and anchor line − First aid kit − Visual distress signal device(s) (flares, dyes) − Additional PFDs − Be familiar with local weather and tidal characteristics. Do not conduct sampling from a boat/barge when threatening weather is imminent, or poor visibility exists. − Sampling from a boat is prohibited in water containing substances likely to cause injury upon short-term or prolonged contact. − Sampling from a boat is prohibited when the temperature of the water is high or low enough to cause injury upon short-term or prolonged exposure. − Avoid sampling from a boat when unsafe water turbulence (waves) exists. − Avoid standing in a boat. − Always use the buddy system when sampling from a boat or barge; on person should be on shore with visual contact of the barge and should be able to summon emergency assistance if needed − Be familiar with local weather and tidal characteristics. Work on a boat or barge will not be performed when threatening or severe weather is impending or present.

☒	Physical Hazard	General Control Measure
☒	Briars or Thistles	Be aware of any briars or thistles on site. Wear appropriate clothing and gloves. Avoid contact with briars or thistles whenever possible.
☐	Business Traffic	Be aware of traffic patterns associated with local businesses near the work site. Allow traffic to enter and exit the businesses in such a manner to avoid creating traffic hazards, back-ups, delays, or potential accident situations.
☐	Cement Dust	Stay clear of mixing operations and avoid contact with, or breathing of the dust.
☐	Chain Saws	Stay clear of any chain saw operations. Subcontractor is responsible for the safe use of chain saws on site.
☒	Cleaning Agents	Use caution of applying cleaning agent to equipment. Use gloves, safety glasses, splash shields, and protective clothing as needed.
☒	Client Activities	Be aware of client activities at or adjacent to the site. Work activities should be coordinated with other site activities to avoid conflicts.
☒	Cold Stress	Work schedules may be modified when temperatures are below 20° F as measured by the wind chill factor. Take frequent breaks to warm up. Drink plenty of fluids. Wear appropriate clothing, and monitor for cold stress symptoms (frostbite, hypothermia, etc.).
☐	Compressed Air or Gas Cylinders	Compressed air or gas cylinders should be clearly marked, and they should be stored, transported, and secured in an approved manner.
☐	Compressed Air/Gas or Pressurized Liquids Hoses, Lines & Fittings	Compressed air or gas, or pressurized liquid lines or hoses should be inspected at least daily, or in the event a leak develops, or if a line or hose is run over or crimped.
☒	Concrete/Masonry/ Foundations	No construction loads shall be placed on a concrete structure or portion of a concrete structure unless a person who is qualified in structural design has determined that the structure or portion of the structure is capable of supporting the loads. All protruding reinforcing steel, onto and into which employees could fall, shall be guarded to eliminate the hazard of impalement. No employee shall be permitted to work under concrete buckets while buckets are being elevated or lowered into position. To the extent practical, elevated concrete buckets shall be routed so that no employee, or the fewest number of employees, are exposed to the hazards associated with falling concrete buckets. A limited access zone shall be established whenever a masonry wall is being constructed. All masonry walls over eight feet in height shall be adequately braced to prevent overturning and to prevent collapse unless the wall is adequately supported so that it will not overturn or collapse. The bracing shall remain in place until permanent supporting elements of the structure are in place.
☐	Confined Spaces (tanks, vaults, vessels, trenches, manholes, some excavations, etc.)	The scope of this project does not entail entry into confined spaces. Confined spaces will not be entered unless a confined space entry permit has been completed, signed, and approved, and all participating personnel are trained in confined space entry procedures, including safety, and rescue procedures. Real and potential hazards of confined space are not addressed by this hazard assessment, and health and safety plan.
☒	Cutting Tools	Stay clear of contractors' cutting tools, especially saws and torches. Be aware that cutting operations could create other hazards, such as falling objects, or shifting materials, etc. Safety glasses should be worn while using cutting tools. Spark-proof tools should be used when working in areas of potential explosive or flammable conditions.
☒	Demolition Activities	Stay clear of walls, ceilings, roofs, etc., as they are being demolished.
☒	Demolition Debris	Demolition material should only be handled by appropriate equipment because of sharp points, edges, etc. Demolition material may also pose a trip hazard, fall, or puncture hazard, so avoid walking or climbing on debris piles, etc.

☒	Physical Hazard	General Control Measure
☐	Drums	If drums are used on-site, they should be clearly labeled with the name of the contents. Drums should only be handled with the appropriate equipment. Drums discovered during excavations, etc., shall not be opened or moved until appropriate identification can be performed. At a minimum, Level B protection is required for sampling any unlabeled drums discovered during remediation procedures.
☒	Dust/Particulates (PNOR)(Particulates Not Otherwise Regulated) (OSHA PEL = 15 mg./m^3, total) (OSHA PEL = 5 mg./m^3, respirable)	For general dust, work should be performed up-wind if possible. If conditions warrant it, monitoring should be done with a PM-10. Monitoring should occur at least 3 times per day, and every time re-entering the site. Readings should be taken downwind from the work area or inside the equipment as indicated by the conditions on site. If the OSHA PEL is exceeded, or is likely to be exceeded, engineering or administrative controls should be used, or a dust respirator must be worn. For hazardous dusts, a detailed air monitoring plan and a respiratory protection plan should be developed for the site activities.
☐	Elevated Work	For any construction work activities elevated 6 feet or more, or other non-construction activities elevated 4 feet or more, fall protection must be provided. Caution should be taken on catwalks and ladders because of potential slippery conditions, or the potential for footwear to catch on the surfaces.
☒	Energized Sources (electrical equipment or hookups, lines, etc.,) (Lockout/Tagout)	Contractors for all electrical activities, and any facility equipment with moving parts should follow proper lock-out/tag-out procedures, and only properly trained employees will perform the work. Employees will not perform any lock-out/tag-out activities unless personnel are properly trained in lockout/tagout procedures. Heed any caution signs or labels.
☒	Equipment Exhaust	Equipment exhaust should be ventilated away from the work area while drilling inside structures. Industrial fans can be used to move exhaust out of the area.
☒	Ergonomic Issues (job hazard analysis)	Ergonomic hazards will be addressed on a site-specific basis once mobilization to the field has occurred. Workstations will be evaluated on an individual basis.
☒	Evening Work	If work is performed during the evening hours, work shall be limited by the availability and the quality of artificial lighting. Care should also be taken to avoid slip, trip, and fall hazards that are not as easy to identify during low light conditions.
☒	Excavations	Stay clear of excavation walls. TRC personnel will not enter an excavation, in accordance with 1926 Sub Part P. Subcontractor must provide a competent person on site, if one is required by the planned activities. Side cuts should conform to 1926 Subpart P requirements, or shoring should be used. All open excavations should be secured using traffic cones, barrier tape, or barricade signs stating "Do Not Enter Excavations", especially if left open overnight.
☐	Explosives	Be aware of potential explosive materials and how to identify them. No smoking is allowed on-site or near where potential explosive materials may be present.
☐	Facility Conveyors (product or waste lines)	Stay clear of facility conveyors, product process lines, and waste disposal lines. Be aware of any client specific health and safety requirements to work in these areas.
☐	Facility Equipment/ Machinery	Be aware of active and moving client equipment on site.
☒	Facility Piping – above ground	Stay clear of above ground pipes. Client is responsible to identify all applicable aboveground facility pipes prior to any work activities in the area. Pipes can be overhead hazards, or trip hazards. Pipes can be hazardous because of the material flowing through them, such as steam, natural gas, toxic chemicals, etc. Some pipes are also coated with hazardous material such as asbestos.
☐	Facility Piping – below ground	Client is responsible to identify all applicable underground facility pipe locations prior to any subsurface activities.

☒	Physical Hazard	General Control Measure
☐	Fall Hazard	Proper tie-off, harnesses, railings, etc. should be used when performing work on ladders, scaffolding, man-lifts, or on the roof of buildings, etc. Stay clear of the edges of pits, trenches, quarries, etc.
☐	Falling Objects	Be aware of any potential falling objects or materials on site. Stay clear of any areas identified as potential falling object areas.
☒	Fences	Be aware of fences in disrepair that may be trip hazards, or may have materials that could cause punctures or cuts. Use caution when crossing over or under fences.
☒	Field Equipment	If field equipment is heavy or awkward to carry, get assistance or use carts to help move around the site.
☒	Field Vehicle	TRC personnel shall follow all applicable state and federal traffic laws while traveling to and from the site, and while working on the site. In particular the following laws should be followed: speed limits, parking restrictions, use of wipers and lights during precipitation events, limiting cell phone use, etc. It is the responsibility of the driver to verify that all safety equipment on the vehicle is working properly before they drive the vehicle. In particular the following items should be checked: tire pressure, tire tread, windshield wipers, windshield washer, headlights, tail lights, brake lights, spare tire, fire extinguisher, first aid kit, etc.
☐	Fire Hazards	Eliminate sources of ignition in work areas that have ignitable materials. Provide an ABC fire extinguisher in close proximity to the support zone.
☒	Flooded Areas	Do not drive through flooded areas or standing water. Do not wade into moving water, or water deeper than 2 feet without adequate assistance.
☐	Flying Debris/ Eye Injuries	Be aware of any flying debris on site and wear protective eyewear when necessary.
☒	Fork Lifts	Be aware of forklift patterns, and stay clear of those routes.
☒	Hand Tools	Use only the appropriate tool for the task at hand. Use the tool(s) as designed, described, and intended by the manufacturer.
☒	Heat Stress	The work schedule may be modified if the ambient temperature is more than 80° F. Take breaks as necessary, and drink plenty of fluids. If necessary, wear sunscreen and sunglasses on bright days. Monitor site personnel for signs of heat stress symptoms (heat rash, heat cramps, heat exhaustion, or heat stroke).
☒	Heavy Equipment.	Contractor is responsible for safe operation of equipment. All mobile heavy equipment must have a functioning backup alarm, and operators must comply with equipment manufacturer's instructions. Maintain proper distance and remain in line of sight of operator and out of reach of equipment. Isolate equipment swings, if possible. Make eye contact with the equipment operator before approaching the equipment. Understand and review hand signals, and wear orange safety vest, if necessary.
☒	Heavy Lifting	Use proper lifting procedures and equipment when handling heavy objects such as drums, manhole covers, tank covers, etc.
☐	High Pressure Gas Lines, etc.	Be aware of high pressure gas lines, and follow approved safety precautions when working with or around the lines.
☐	Highway Traffic	Traffic control within the right-of-way will be in accordance with the WDOT "Work Zone Safety – Guidelines for Construction, Maintenance, and Utility Operations" procedures. Work may be restricted within specific lanes during peak traffic times. Verify peak traffic times, and review planned activities with the WDOT, so that appropriate lane closures can be coordinated.
☒	Housekeeping	All field vehicles, job trailers, and field offices will be properly cleaned and organized to prevent cluttered work and storage areas.

☒	Physical Hazard	General Control Measure
☒	Hunters/Firing Range, etc.	Be aware of surrounding activities that may involve hunting, firearms, etc. that may not be in your immediate area, but could be create an unsafe work environment.
☐	Ice (thin)	When project activities include either crossing ice or working directly on the ice, a detailed plan should be developed that will be used to continually evaluate the ice conditions, and to determine when work should be terminated due to unsafe conditions. All staff working on the ice will wear an appropriate and approved personal floatation device. Other emergency equipment such as ropes, a throwable floatation device, a means to warm a wet and cold worker, etc. must be available. A buddy system should also be used for this type of work, such that one person is always on shore or at least on previously determined safe ice.
☒	Insects (ticks, bees, spiders, etc.)	Site workers with known allergies to insect bites should carry their own medication. In case of emergencies, inform fellow workers of any severe allergies. Use insect repellant as necessary, and as specifically allowed on site. If possible, wear long-sleeved shirts and pants. If appropriate, check for ticks at the end of each day. Have other appropriate first aid supplies handy for bites.
☐	Irate Neighbors	Be aware of the potential for irate neighbors or outsiders that may interfere with work activities, or that may potentially damage equipment or on-site materials, etc.
☐	Ladders	Ladders should only be used if they are in good condition, conform to OSHA requirements, and if they will be used in an appropriate manner. Be especially cautious of slipping on ladders when the ladder or footwear is wet or dirty.
☐	Landfill Gas (Methane, CO2, Hydrogen Sulfide)	Avoid breathing gas, especially in low oxygen areas (simple asphyxiant). Potentially flammable and explosive, so keep ignition sources away from gas. Explosive conditions of LEL >5% in a work area should be ventilated as soon as possible, or the area should be evacuated.
☐	Leachate (Municipal Solid Waste - MSW)	MSW leachate may contain hazardous biological substances, so avoid physical contact with leachate and, if possible, stay up-wind. If contact is made with leachate, wash affected areas thoroughly with soap and water. If boots contact leachate they should be thoroughly washed with soap and water also.
☐	Lead	Wear gloves when in contact with lead contaminated soil, etc. Thoroughly wash hands and arms when daily work is completed.
☒	Long Hours/Fatigue	Long work hours can lead to fatigue, and fatigue can lead to the physical inability to perform the work in a safe manner, or travel to, or from, a work site in a safe manner. If long work hours are scheduled, or if the scheduled work takes longer than planned, field staff should determine if fatigue is, or will be, an issue. Field staff should evaluate whether they are able to complete the work in a safe manner, or whether they are able to travel in a safe manner. If fatigue is an issue, appropriate breaks should be planned or taken, including overnight stays when necessary.
☒	Material Handling	Move containers and heavy material only with the proper equipment, and secure them to prevent dropping, falling, or loss of control during transport. Stay clear of material handling operations, especially near slopes. Do not stand down the slope from equipment, supplies or materials being moved above on the slope, or being deployed onto the slope.
☐	Material Storage	Stored material may be a falling hazard, or a crush hazard. Do not stand adjacent to materials stacked up, such as pipes, geosynthetic rolls, etc., or in the area of deployment.
☐	Methane Gas (Landfill Gas)	Explosive conditions (5% LEL) will be ventilated, if encountered, prior to working in an area. Methane is a simple asphyxiant.

☒	Physical Hazard	General Control Measure
☐	Mine or Quarry	No work shall be performed within 15 feet (or other designated client setback, whichever is greatest) of the mine or quarry walls. Be aware of the potential for falling rocks or slope failures.
☐	Municipal Solid Waste (MSW)	MSW may contain hazardous biological substances, so avoid physical contact, and if possible stay up-wind. Wear appropriate PPE, such as gloves, safety shoes, and safety glasses. Wash hands, arms, and face after working near MSW. Reusable PPE and equipment should be thoroughly decontaminated after exposure to MSW. MSW may also contain sharp objects with the potential to puncture PPE.
☐	Natural Gas	Natural gas is flammable and explosive. Keep ignition sources away from gas sources. Use spark proof tools when working with gas lines, etc.
☐	Noise	Hearing protection must be worn when noise levels exceed 85 dBA in the work area. If you need to raise your voice to be heard at the work site, then hearing protection should be worn. Hearing protection will be worn near drill rigs.
☐	Overhead Hazards	Pay attention to overhead equipment, piping, and structures. A hard hat must be worn at all times when overhead hazards are present on site.
☐	Pedestrian Traffic (public, client, workers)	Be aware of pedestrian traffic patterns and, route traffic around the exclusion zone(s), as necessary, to avoid distractions and the potential for exposures or accidents. Use appropriate barricades and caution tape to mark work areas.
☒	Poisonous Plants	Be able to identify any local poisonous plants and avoid them if possible, or wear protective clothing as necessary. When removing potentially exposed clothing or PPE, the clothing or PPE should be carefully and thoroughly washed or decontaminated.
☐	Portable Heaters	Be aware of portable heater locations and stay a safe distance from them.
☐	Power Washing Equipment	Stay clear of the power washing nozzles and equipment.
☐	Propane Tanks	Be aware of propane tank locations, and any gas lines leading to or from the tanks.
☐	Radiation (ionizing)	Exposure to ionizing radiation can be controlled by one of three methods. Time, distance, or shielding. Limit your time near the radioactive source. Keep your distance from the radioactive source. Shield yourself from the radioactive source with appropriate shielding material. If the radioactive source(s) are from TRC equipment, the TRC employee using the equipment needs required training to use the equipment, and must be monitored using a dosimeter badge.
☐	Rock Blasting	Contractor is responsible for following safe blasting protocol. Heed all contractor warnings at time of blasting and stay well clear until safe to return to area, as indicated by the contractor.
☒	Sample Preservative Chemicals:	Wear safety glasses and nitrile gloves when adding preservative chemicals to sample bottles or vials. Have clean wash water nearby.
☐	Scaffolding	Stay clear of scaffolding. Be aware of the OSHA safety requirements for using constructing and scaffolding.
☒	Severe Weather	Work may be suspended if dangerous weather conditions (lightening, tornadoes, high winds, heavy rain, freezing rain, etc.) occur. Be aware of changing weather conditions, and be prepared to take shelter as necessary. Potential shelters should be identified prior to beginning work.
☒	Sharp Objects	Wear appropriate gloves when handling sharp objects, or use appropriate equipment to move objects.
☒	Slippery Ground/Surfaces	Exercise caution, especially on slopes, field trailer floors and stairs, after a precipitation event. Use slip resistant boots, or implement surface preparations to eliminate the slippery nature of the surface prior to accessing the area. Spill control measures and general housekeeping should be utilized to help prevent slipping on wet floors, wet pavement, and general work areas.

☒	Physical Hazard	General Control Measure
☒	Slips, Trips, and Falls:	Maintain clear walkways for work areas.
☒	Snakes	Be aware of the potential for snakes in the area and wear snake boots, snake chaps, gaiters, or leggings as needed.
☐	Steam Cleaning Equipment	Stay clear of the steam cleaning nozzles and equipment.
☐	Steel Erection	All materials, equipment, and tools, which are not in use while aloft, shall be secured against accidental displacement. The controlling contractor shall bar other construction processes below steel erection unless overhead protection for the employees below is provided. Employees engaged in steel erection activities on a walking/working surfaces with an unprotected side or edge more than 15 feet above a lower level shall be protected from fall hazards by guardrail systems, safety net systems, personal fall arrest systems, positioning device systems or fall restraint systems.
☒	Steep Slopes or Banks	Pay attention to footing and walking. Stay a safe distance from unstable or extremely steep slopes. Wear appropriate footwear. Be aware of potential slope or bank failures. Heavy equipment should not be operated on or near unstable slopes or banks.
☐	Strong Nuisance Odors	Strong odors should be ventilated before entering a work area, or a respirator shall be worn as needed.
☒	Sunburn	For extended periods of time outdoors on sunny days, sunglasses, long-sleeved shirts and long pants should be worn to help prevent sunburn and eye problems. Wear sunscreen as appropriate for the project.
☒	Surface Water	Working next to or on, bodies of water shall be done using the buddy system. Staff shall wear USCG-approved personal floatation devices when on or adjacent to bodies of water.
☒	Terrain	Uneven or steep terrain can cause hazardous conditions for walking and transporting equipment around the site. Site personnel should use caution when working on uneven surfaces, and they should avoid working down-slope from heavy equipment, or materials being moved or stored.
☐	Traffic (client, contractors, public, semi-trucks, forklifts, etc.)	Obey all posted speed limits. Park in designated areas only. Be aware of traffic patterns on site, and during access to the site. Use orange traffic cones and barrier warning tape, as needed, or if within 25 feet of the right-of-way. TRC personnel must wear orange safety vests when working in or near traffic areas.
☐	Trains/Railroad Tracks	Be aware of any train activities on the site, entering or leaving the site, or immediately adjacent to the site. Do not walk between the rails or on the railroad ties. When driving, stop at all railroad crossings, even if they are unmarked, and look in both directions before proceeding across the tracks.
☐	Transporting Hazardous Materials	TRC personnel who transport hazardous materials shall have the required DOT training prior to transporting materials, and will comply with all applicable DOT regulations and requirements for labeling, packaging, etc.
☐	Tree Cutting	Stay clear of tree cutting activities.
☒	Trenching	TRC personnel will not enter trenches not in accordance with 1926 Sub Part P. Be aware that some trenching conditions may result in a confined space condition.
☒	Trip Hazards (wires, cords, hoses, debris, corn stubble, uneven surfaces, etc.)	Temporary wires, cords, hoses, etc., should be properly located, marked, and protected to help prevent tripping and disruption to work activities. Trip hazards are particularly a problem early in the morning, late in the day, or under other poor lighting conditions.
☐	Under Ground Storage Tanks (USTs) (Septic Tanks)	If any unknown UST's are encountered, drilling or excavations will be terminated in that location until a new scope of work, Risk Assessment and Health & Safety Plan can be developed.

☒	Physical Hazard	General Control Measure
☒	Uneven Surfaces	Be aware of uneven walking or driving surfaces and exercise caution when moving around the site.
☒	Utilities – Overhead (electrical, telephone, cable TV, etc.)	A subcontractor, the client, or TRC will locate and identify all overhead utilities. The owner or client will be responsible for identifying all applicable overhead utilities, product lines, pipes, and aboveground tanks. A minimum clearance of 20 feet must be maintained between equipment and overhead utility lines.
☐	Utilities – Underground (electric, gas, telephone, water, storm sewer, sanitary sewer, cable TV, etc.).	A subcontractor, the client, or TRC will call Digger's Hotline to locate all underground utilities. The owner or client will be responsible for marking all applicable on-site underground utilities, product lines, pipes, and tanks.
☒	Waterways	Exercise caution near, around, or in waterways. Harnesses should be worn when working in, or within 4 feet of, the waterway, especially when attempting to sample from shore or a boat or barge. All applicable laws and regulations will be followed when navigating a boat or barge to and from a work site.
☐	Welding Tools	Stay clear of welding operations, and do not look directly at the welding process without appropriate eyewear and shield.
☐	Virginia Department of Transportation (VADOT) Work	Follow the appropriate VADOT guidelines regarding: − Work Zone Safety – Guidelines for Construction, Maintenance, and Utility Operations − Safety Directives Applicable to Subcontractor's Activities − Foot Protection − Eye Protection − Protective Headgear – Hard Hats − Confined Spaces – IHLR 32.61 − Safety Vest − Personal Safety Equipment Requirements on Railroad Property
☐	VADOT Traffic Control	**Traffic Control**: Traffic control within the right-of-way will be in accordance with the VADOT "Work Zone Safety – Guidelines for Construction, Maintenance, and Utility Operations" procedures. Work may be restricted within specific lanes during peak traffic times. Verify peak traffic times, and review planned activities with the VADOT, so that appropriate lane closures can be coordinated.

Physical hazards due to the tasks to be performed (e.g., groundwater sampling.) and due to the site setting and condition (e.g., slips, trips, or falls due to rocky terrain, etc.) were analyzed.

Other than periodic groundwater monitoring, no subsurface penetrations or disturbances are permitted by TRC personnel without an amendment to this Plan.

All project vehicles are to remain on roads or areas designated for vehicle parking.

Solar Radiation

Solar radiation may be a hazard during field work at the site. During days with direct sun exposure, especially where shaded area is not readily available, workers at the site must wear covering clothing or sunblock to minimize harmful effects of solar radiation on skin.

5.4 Biological Hazards

Biological hazards (e.g., allergic reactions to poisonous plants or insects indigenous to the area, etc.) associated with tasks to be performed were analyzed. Hazard mitigators for each biological hazard identified below.

Insects and Spiders

The primary insect and spider hazards for field work at the site are bees (including wasps and yellow jackets), mosquitoes, ticks, chiggers, and spiders. Spiders, in particular, like the warm, wet environments provided by protective well casings and vault enclosures.

Before initial assignment, personnel with known allergic responses to insect stings or bites must identify themselves to the SHSO or his designee. In all cases, a victim suspected of being bitten by a poisonous stinging insect or spider shall receive immediate medical attention. If an employee is bitten, an ice pack should be applied to reduce swelling. If possible, the spider should be killed for field identification, or taken to the hospital if it is either a black widow or brown recluse spider.

Spiders

The only two venomous spiders found in Virginia are the Black Widow and, more rarely, the Brown Recluse. Black Widow spiders are recognizable by their shiny black body. Females have a red hourglass-shaped spot on their backs, and males have light streaks on their abdomens. The Brown Recluse is about one-half inch in size overall and has long, skinny legs with a characteristic dark violin-shaped marking on its head. Bites from both of these spiders can cause swelling, weakness, pain, and fever. Bites from the spiders are seldom fatal if quick medical attention is applied. Proper removal of webs, wood piles and unnecessary boxes can reduce the chances of encountering one of these spiders.

Black Widow

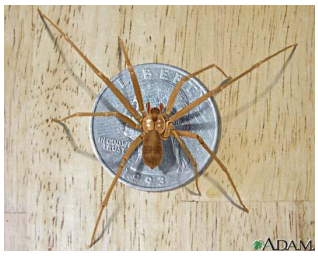

Brown Recluse

During the initial well inspection, the field crew will look for stinging insects and evidence thereof (i.e., spider webs, wasp nests) prior to placing their hands into the enclosure. The field crew will be wearing appropriate PPE (e.g., nitrile gloves), to provide additional protection from insect bites and/or stings.

Mosquitos

Mosquito-borne diseases found in Virginia include West Nile Virus, Eastern equine encephalitis, La Crosse encephalitis, and St. Louis encephalitis. The best protection from mosquito-borne diseases is to avoid a bite. Suggestions for avoiding mosquito bites include:

- Wear long, loose, and light-colored clothing;
- If possible, stay indoors when mosquitoes are biting;
- Use insect repellant on skin and clothing;
- Turn over or remove containers where water collects (e.g., old tires, buckets); and
- Eliminate standing water (e.g., on tarps).

Ticks

Tick-borne diseases found in Virginia include ehrlichiosis, Lyme disease, Bartonella, and Rocky Mountain Spotted Fever. The best protection from tick-borne diseases is to avoid a bite. Suggestions for avoiding tick bites include:

- Wear long pants and a long-sleeved shirt buttoned at the wrist;
- Tuck and/or tape the legs of pants inside your socks or boots;
- Tuck and/or tape shirt into pants;
- Wear light colored clothing so ticks can be seen easily and removed promptly;
- Use insect repellant on skin and clothing;
- Avoid walking unprotected in overgrown grassy areas or dense woods;
- Remove ticks from your clothing before going indoors or into a vehicle; and
- Perform a thorough tick check midway through the day and immediately after returning from being outdoors. Inspect all parts of your body carefully including armpits, scalp, and groin.

Lightweight breathable coveralls will be provided on-site to assist in providing a protective barrier against insects. High grass around working areas should be trimmed to minimize exposure.

The length of time a tick is attached to skin is a key factor in avoiding disease. An infected deer tick has to be attached for at least 4 hours before it can transmit Lyme disease, and the infected dog tick only needs to be attached for 4-6 hours to cause Rocky Mountain Spotted Fever. As such, ticks should be removed from skin immediately upon discovery. Removed ticks should be taped to a card or piece of paper, dated, and stored in case of future illness. Ticks should be provided to medical personnel for analysis upon seeking treatment if tick-borne illness is suspected.

The proper way to remove a tick is by grasping it with tweezers as close to the skin as possible and gently but firmly pulling straight out. Tick removing tools will be made available to all field personnel. If tweezers are not available, do not touch the tick with bare fingers; instead, use a paper towel, gloves, or a tissue. The disease-causing bacteria can enter the bloodstream through any break in the skin. After

removing the tick, hands and bite location should be washed with soap and warm water. Using nail polish, petroleum jelly, alcohol, or a hot match are not safe removal methods.

Lyme disease is caused by the bacterium *Borrelia burgdorferi* and is transmitted to humans by the bite of infected blacklegged ticks (or deer ticks), which are found in the northeastern and north-central United States. When a young tick feeds on an infected animal, the tick takes the bacterium into its body along with the blood meal. The bacterium then lives in the gut of the tick. If the tick feeds again, it can transmit the bacterium to its new host. Extra precaution should be taken in May, June, and July, since most cases of human illness occur in the late spring and summer when the ticks are most active.

Typical early symptoms include fever, headache, fatigue and muscle weakness/ twitching, neck stiffness, back pain, and a characteristic skin rash called erythema migraines. This rash often takes a bull's eye appearance and is observed in about 50 to 80% of Lyme disease patients. If left untreated, infection can spread to joints, the heart, and the nervous system, and may cause death. Later stage symptoms include joint pain and stiffness, fatigue, chest pain and difficulties breathing, heart arrhythmia, generalized lymph node swelling, muscle weakness and twitching/spasms, fever, meningitis, encephalitis, tinnitus, mental dysfunction (difficulties concentrating, slurring of speech, dizziness), facial palsy, anxiety, and hallucinations. Lyme disease is diagnosed based on symptoms, physical findings (e.g., rash), and the possibility of exposure to infected ticks. If treated early, most cases of Lyme disease can be treated successfully with four weeks of antibiotics. Later stage disease may require months of treatment with antibiotics. Further information on diagnosis and treatment of tick-borne illnesses may be found at www.ilads.org (International Lyme and Associated Diseases Society).

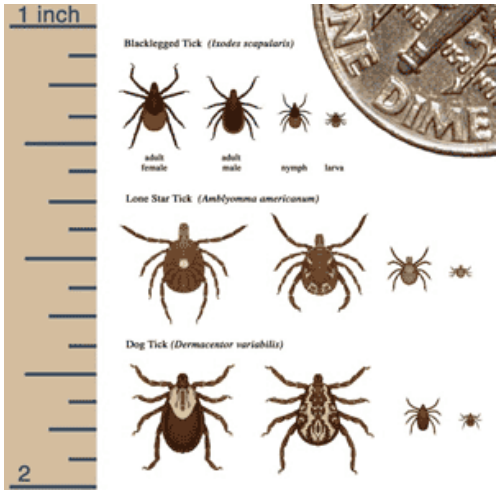

Image showing appearance and relative sizes of adult male and female, nymph and larval ticks including deer ticks (*Ixodes scapularis*), Lone star ticks (*Amblyomma americanum*), and dog ticks (*Dermacentor variabilis*). Of those pictured, only the *Ixodes scapularis* ticks are known to transmit Lyme disease.

Multiple Erythema Migrans

Single Erythema Migrans

Single Erythema Migrans

Any field personnel suspecting that they may have the symptoms of Lyme disease should seek medical consultation and should contact the SHSO and Project Manager immediately, who will initiate any appropriate incident reporting protocols.

Poisonous Snakes

The venomous snakes of the Northern Virginia include the Northern Copperhead and the Timber Rattlesnake. The Northern Copperhead is common to North American deciduous forests and mixed woodlands and is recognizable by its distinctive light and dark brown banding. Bites from the copperhead, which are venomous but rarely fatal, can produce pain, throbbing, swelling and nausea. It can be damaging to muscle and bone tissue. The Timber Rattlesnake is distinguished by the rattle at the end of its tail and dark, wavy crossbands across its body. During the summer months, some females can be found on open, rock ledges, while males and other females will prefer cooler, denser woodlands. While not generally lethal, the bite of a timber rattlesnake can cause swelling and tissue damage. Field personnel suspected of being bitten by a poisonous snake shall receive immediate medical attention.

Northern Copperhead

Timber Rattlesnake

To prevent encounters with snakes, personnel shall check small hiding places such as niches in rocks and woodpiles and look over and within fallen logs before stepping over. Additionally, by wearing heavy work boots on site, personnel will produce vibrations that will cause the snake to escape before personnel encounter it and provide a thick barrier against a bite.

6.0 GENERAL INFORMATION

Client Name: Atlantic Research Corporation
Project #: 229931.0000 Phase #: 3
Project Name: HAS Plan - Groundwater Sampling; Observation of O&M
Project Manager: Geoff King
Prepared By: John Lair
Date: Fall 2018

Approved By: _____ (PM) *Approved By:* _____ (HSC)
Geoff King Curt Kugler

Date: _____ *Date:* _____

On-Site Project Team Member	On-Site Project Responsibilities
John Lair	TRC Site Health and Safety Representative (Supervisor)
N/A	Project Engineer
Geoff King	Project Manager
Geoff King/John Lair	Project Technical Coordinator
John Lair	Project Scientist
John Lair	Observation and Documentation
John Lair	Groundwater Sampling
N/A	Surveying

(1) Field projects will be audited for H&S compliance if they meet the requirements of the audit program.

Any required construction/demolition activities: ☒ No ☐ Yes If Yes, complete Section 2

No subsurface penetrations or disturbances are permitted without an amendment to this Plan.

All project vehicles are to remain on roads or areas designated for vehicle parking.

7.0 CONSTRUCTION TASKS

[work tasks to be performed by TRC staff or TRC subcontractors]

Civil		**Mechanical**
☐ Sewer (utility)	☐ Steel (erection)	☐ Insulation
☐ Water (utility)	☐ Pre-Cast (erection)	☐ Millwright
☐ Electric (utility)	☐ Concrete (erection)	☐ Fire Protection
☐ Communications (utility)	☐ Re-Bar	☐ Boiler
☐ Siding	☐ Elevator	☐ Industrial Ventilation
☐ Roofing	☐ Fireproofing	☐ Steel Fabrication/Erection
☐ Drywall	☐ Windows	**Other**
☐ Flooring	☐ Landscaping	☐ Electrical
☐ Ceilings	☐ Painting	☐ Demolition (attach a detailed "**Demolition Plan**")
☐ Casework	☐ Insulation	
☐ Masonry	☐ Doors	
☐ Escalator	☐ Finish Concrete	

☐ Others	
☐ Others	
☐ Others	

Estimated Direct-Hire TRC Employees:

Home Office:	☐ Not Applicable ☐ Specify:		
Craft Labor:	☐ Not Applicable ☐ Specify:		
Craft		Quantity	
Craft		Quantity	

8.0 APPLICABLE SAFETY STANDARDS OR REGULATIONS:

☒ Federal OSHA	☒ State OSHA	☒ Owner/Client

Specific Standards:	29 CFR 1910 (OSHA)	29 CFR 1926 Other Regulations)
☒ Medical Services and First Aid	1910.151	1926.50
☐ Hazard Communication (HAZCOM)	1910.1200	1926.59
☐ Lead Exposure	1910.1025	1926.62
☒ HAZWOPER	1910.120	1926.65
☒ Personal Protective Equipment (PPE)	1910.132-138	1926.95-107
☐ Respiratory Protection	1910.134	1926.103
☐ Ventilation	1910.94	1926.57
☐ Noise Exposure	1910.95	1926.52
☐ Illumination	N/A	1926.56
☐ Fire Protection	1910.157	1926.24 and 150-155
☐ Sanitation	1910.141	1926.51
☐ Materials Handling (rigging, etc.)	1910.176	1926.250-251
☐ Welding/Cutting	1910.251-255	1926.350-354
☐ Lockout/Tagout	1910.147	1926.417
☐ Electrical (flexible cords, etc.)	1910.305	1926.400-449
☐ Scaffolding	1910.28-29	1926.450-454
☐ Fall Protection (elevated work)	1910.23-29, 1910.66-68	1926.104-107; 500-503
☐ Ladders/Stairways	1910.25-27	1926.1050 and 1060
☐ Cranes, Derricks, Hoists, Elevators, etc.	1910.179-181	1926.550-555
☐ Aerial Lifts	1910.66-68	1926.556
☐ Earth Moving Equipment	N/A	1926.602
☐ Powered Industrial Trucks (forklifts)	1910.178	1926.602
☐ Excavations and Trenching	N/A	1926.650-652
☐ Concrete and Masonry	N/A	1926.700-706
☐ Steel Erection	N/A	1926.750-761
☐ Demolition	N/A	1926.850-860
☐ Asbestos	1910.1001	1926.1101
☐ Confined Space Entry	1910.146	1926.21
☐ Commercial Diving	1910.401-441	1926.1071-1092
☐ Compressed Gases	1910.101-105	N/A
☐ Ionizing Radiation	1910.1096	1926.53
☐ Benzene	1910.1028	1926.1128
☐ Cadmium	1910.1027	1926.1127
☒ Tools – Hand and Power	N/A	1926.300-307
☐ Blasting and Using Explosives	N/A	1926.900-914

9.0 TRAINING REQUIRED

(* required for all "Type 3" sites; but minimum recommended)

Check "A" if training required for everyone, and check "T" if training required for specific task.

A	T	SUBJECT	REFERENCE	
			29 CFR 1910	29 CFR 1926 or Other
☒	☐	HAZWOPER 40 hour*	1910.120	1926.65
☐	☐	3-Day HAZWOPER Supervised On-Site*	1910.120	1926.65
☒	☐	8-Hour HAZWOPER Refresher*	1910.120	1926.65
☐	☐	8-Hour Supervisor HAZWOPER*	1910.120	1926.65
☒	☐	First Aid, CPR*	1910.151	1926.23,.50
☐	☐	Respiratory Protection	1910.134	1926.103
☐	☐	Confined Space ☐ Permit Attached	1910.146	1926.21
☐	☐	Mine Safety (MSHA)	N/A	30 CFR 48.8
☐	☐	Lockout/Tagout ☐ Permit Attached	1910.147	1926.417
☐	☐	Bloodborne Pathogens	1910.1030	N/A
☐	☐	Noise Exposure	1910.95	1926.52
☐	☐	Competent Person	N/A	1926.32,.450,.650
☐	☐	Construction Health and Safety OSHA 10-Hour	N/A	1926.21
☐	☐	Demolition	N/A	1926.850
☐	☐	Excavations ☐ Permit Attached	N/A	1926.650-652
☐	☐	Electrical Work	1910.332	1926.400-.449
☐	☐	Ladders/Stairways	N/A	1926.1050-1060
☐	☐	Scaffolding	1910.28	1926.450-454
☐	☐	Fall Protection	1910.23-29; 1910.66-68	1926.104,.501
☐	☐	Commercial Diving	1910.410	1926.1071-1092
☐	☐	Hot Work ☐ Permit Attached	1910.251-255	1926.350
☐	☐	Lead Awareness	1910.1025	1926.62
☐	☐	Asbestos Awareness	1910.1001	1926.1101
☐	☐	Cadmium	1910.1027	1926.1127
☐	☐	Benzene	1910.1028	1926.1128
☐	☐	Ionizing Radiation	1910.1096	1926.53; 10 CFR 19.12
☐	☐	Troxler or NITON Gauge User	1910.1096	10 CFR 19.12
☐	☐	Radiation Safety Program	1910.1096	10 CFR 20.1101
☐	☐	Hazard Communication (HAZCOM)	1910.1200	1926.59
☐	☐	DOT Hazardous Materials Shipping	1910.1201	49 CFR 172.704

Client-Specific Training: ☒ Not Applicable ☐ Specify
Site-Specific Orientation: ☒ Not Applicable ☐ Specify
Competent Person: ☒ Not Applicable ☐ Specify
Direct-Hire Employee Training/Certification: ☒ Not Applicable ☐ Specify

10.0 MEDICAL SURVEILLANCE

Surveillance Required: * Required for all "Type 3" sites; baseline is minimum recommended
** Specify frequency below

	29 CFR 1910	29 CFR 1926 or Other
☒ HAZWOPER Physical – Baseline*	1910.120	1926.65
☒ HAZWOPER Physical – Annual	1910.120	1926.65
☐ HAZWOPER Physical – Biennial*	1910.120	1926.65
☐ OSHA Respiratory Protection Questionnaire	1910.134	1926.103
☐ Respiratory Certification Exam	1910.134	1926.103
☐ Arsenic (urine) **	1910.1018	N/A
☐ Asbestos **	1910.1001	1926.1101
☐ Cadmium (blood) **	1910.1027	1926.1127
☐ Lead/ZPP (blood) **	1910.1025	1926.62
☐ Mercury (blood) **	N/A	N/A
☐ PCB **	N/A	N/A
☐ Vinyl Chloride **	1910.1017	1926.117
☐ Hepatitis B Vaccine (series) **	1910.1030	N/A
☐ Tetanus/Diphtheria	N/A	Stay Current
☐ Stress Test	N/A	Only as requested
☐ Visual Acuity Test	N/A	Only as requested
☐ Hearing Test (Audiometry)	N/A	Only as requested
☐ Pulmonary Function	N/A	Only as requested

Client-specific drug testing[1]: ☒ Not Applicable ☐ Specify
Client-specific medical monitoring[1]: ☒ Not Applicable ☐ Specify
Site-specific medical monitoring: ☒ Not Applicable ☐ Specify
**Frequency of medical monitoring: ☒ Not Applicable ☐ Specify

Note: TRC has a "Drug and Alcohol-Free Workplace" policy (#TRC Academy Course #900013753). TRC may require employees or subcontractors to be tested upon reasonable suspicion, following accidents or incidents during work activities, or during travel to or from a project site. Client policies may be more strict in regard to procedures following an accident. Project managers must be aware of these and inform employees and subcontractors of any additional requirements.

11.0 PERSONAL PROTECTIVE EQUIPMENT (PPE)

Based on evaluation of potential hazards, the following levels of personal protection have been designated for the applicable work tasks:

Specific TRC Job Task or Function	Minimum Level of Protection			
TRC Site Visitors – Must be escorted	☒ D			
Decontamination	☒ D	☐ C	Decontamination	☒ D
Level D: Safety glasses (ANSI); Safety Shoes (ANSI); Nitrile gloves; High-visibility safety vest: Kevlar gloves				
Groundwater Sampling	☒ D	☐ C	☐ B	☐ A
Level D: Safety glasses (ANSI); Safety Shoes (ANSI); Nitrile gloves; High-visibility safety vest: Kevlar gloves				

Criteria for changing protection levels are as follows:

Evacuation[2] or Protection Level Change[3] Criteria	Approvals Required[1]		
	HSR	HSC	CHSM
Site Evacuation Plan: ☐ Not Applicable ☒ Specify or Attach Plan:			
Change to Level D when: ☒ Not Applicable ☐ Specify	☒		
Change to Level C when: ☒ Not Applicable ☐ Specify	☒	☒	☒
Change to Level B when: ☒ Not Applicable ☐ Specify	☒	☒	☒
Change to Level A when: ☒ Not Applicable ☐ Specify	☒	☒	☒

(1) HSR: Health & Safety Supervisor On Site
HSC: Health & Safety Coordinator
CHSM: Corporate Health & Safety Manager

(2) General Recommendations: Evacuate the area when LEL readings are >10% LEL in the atmosphere, or when PID readings are greater than the PEL in the breathing zone.

(3) General Recommendation: To Level C when PID readings are greater than the PEL in the breathing zone. To Level B or A only after detailed evaluation and planning.

Note: Changes to the level of protection shall be made only after the required approvals are obtained. All changes shall be recorded in the field log and reported to the Project Manager as soon as possible. TRC's H&S goal is to avoid using respiratory protection unless it is absolutely necessary or required. Administrative controls or engineering controls should always be considered as a means to reduce potential exposures, before PPE is required or considered.

12.0 AIR MONITORING

The following monitoring instruments shall be used on site to measure airborne contaminant concentrations in Either the breathing zone, or as part of an overall site Air Monitoring Plan if required. No air monitoring is anticipated under the activities described for this HAS Plan. If additional activities or air monitoring are required a separate site-specific HAS Plan should be developed for those activities.

Monitoring Equipment		Location of Monitoring	Frequency of Monitoring	Action Levels
☐ Combustible Gas Indicator		☒ N/A ☐ Monitoring Plan Attached ☐ Confined Space ☐ Specify	☐ Continuously when potential combustible gases or lack of oxygen are suspected. ☐ Specify	5-10% LEL: continue with caution > 10 % LEL: evacuate the area ☐ Specify
☐ O2 Monitor ☐ CO Monitor ☐ H_2S Monitor		☒ N/A ☐ Confined Space ☐ Specify	☐ Continuously when excess oxygen (>22.5%) or lack of oxygen (<19.5%) are suspected. ☐ Specify	< 19.5% Oxygen: evacuate the area; supplied air may be needed > 22.5% Oxygen: evacuate the area; potential fire hazard ☐ Specify
☐ Colorimetric Tubes		☒ N/A ☐ Specify	☐ Periodically during sampling for analytical purposes only	☐ Specify
Type:		☐ Sample Container	☐ Whenever noticeable odor is present	
Type:		☐ Confined Space	☐ Specify	
Type:		☐ Specify		
☐ PID		☒ N/A	☐ Periodically during sampling for analytical purposes only	☐ Specify
		☐ Sample Container		
Lamp Needed:	☐ 9.8 eV ☐ 10.6 eV ☐ 11.7 eV	☐ Confined Space	☐ Specify	
		☐ Specify		
Calibration Gas:	Isobutylene		☐ Specify	
Correction Factor:			☐ Specify	
☐ FID		☒ N/A ☐ Specify	☐ Specify	☐ Specify
☐ Mini-RAM		☒ N/A ☐ Specify	☐ Specify	☐ Specify
☐ Other:		☐ Specify	☐ Specify	☐ Specify
☐ Laboratory Supported		☒ N/A ☐ Specify	☐ Specify	☐ Specify

[1] Whenever air monitoring is required to be performed, a detailed Air-Monitoring Plan should be developed and attached to the HSP. The plan should include Monitoring Locations, Frequency of Readings, and any Action Levels being used to control the work site.

13.0 SITE CONTROLS AND WORK ZONES

Facility Alarms or Signals:	☒ Not Applicable	☐ Specify
Work Permits Required:	☒ Not Applicable	☐ Specify
Work Traffic Issues:	☒ Not Applicable	☐ Specify
Parking Issues:	☒ Not Applicable	☐ Specify
Railway Traffic Issues:	☒ Not Applicable	☐ Specify

Support Zone(s):

☒ TRC Field Vehicle	☐ Job Trailer On Site	☒ Other: Storage Room

Contamination Reduction Zone(s):

☒ Field vehicle	☒ Facility restroom/utility room	☐ Other:

Exclusion Zone(s):

☐ Area immediately surrounding work area	☐ Other:

Site Entry Procedures:

☒ **Notify Site H&S Representative.**	
☒ **Read H&S Plan and sign Acknowledgment Statement**	
☒ Check in with the facility contact person	☐ Specify
☒ Check in with facility security guard	☐ Specify
☒ **Wear proper personal protective equipment.**	
☐ Attend facility orientation	☐ Specify
☒ **Conduct daily safety meeting (document).**	
☐ Other:	☐ Specify

14.0 DECONTAMINATION PROCEDURES

Personnel: (specify) TRC

Example: If severe contamination is expected, or the work was performed in Level A, Level B, or Level C, a specific and detailed decontamination procedure should be written to address the appropriate contamination. If work was performed in Level D or Modified Level D, and minimal contamination is expected, follow standard decontamination procedures, and good personal hygiene. Disposable PPE should be removed, contained, and disposed in an appropriate manner. Prior arrangements should be made if disposal is planned for at the project site. Site workers should plan and stage for wash water and soap at the site, prior to beginning the work. Site workers should wash hands and any exposed skin extremely well with soap and water, prior to leaving the contamination reduction zone, eating, drinking, driving, or leaving the site. Any soiled or contaminated clothing should be removed and handled appropriately, by either washing as soon as possible, or if necessary, disposing. Soiled or contaminated clothing should be carefully bagged prior to disposal or washing, to reduce potential exposure.

Equipment: (specify) Groundwater Sampling Equipment

If severe contamination is expected, a specific and detailed decontamination procedure should be written to address the appropriate contamination. Site workers should plan and stage for the appropriate decontamination method at the site, prior to beginning the work. Any contaminated single-use disposable equipment or PPE should be appropriately containerized and disposed as soon as possible in an appropriate manner. Prior arrangements should be made if disposal is planned for at the project site. Contaminated equipment or PPE that will be re-used should be handled and cleaned while wearing the appropriate PPE. Typically, equipment is decontaminated using Alconox soap and de-ionized water.

15.0 DISPOSAL OF INVESTIGATION-DERIVED MATERIAL

☒ Leave on site for disposal. ☐ Other:

Follow TRC container and marking protocols.

16.0 WORK LIMITATIONS

☒ Buddy system required for some tasks: Specify For very deep wells
☒ Work will be performed during daylight hours only
☐ Work will be performed using artificial light
Describe or attach a lighting plan:
☒ No eating, drinking, or smoking in contamination reduction zone(s) or exclusion zone(s)
☒ When temperatures are either above 80°F or below 20°F, work schedules may be modified
☒ Other site-specific limitations: Do not drive off roads

17.0 RADIATION SAFETY

- ☒ Radiation information is not applicable to this project. However, prior investigations identified radioactive materials on the site (Cobalt-60). These materials were removed from the site. The monitoring wells to be sampled and areas to be assessed relative to the Plan are not in the area previously identified as having radioactive materials.
- ☐ Notify RSO.
- ☐ Wear dosimeter badge when handling gauge.
- ☐ Post applicable radiation signs and documents.
- ☐ Post emergency numbers.
- ☐ Provide at least two lock systems for overnight storage.
- ☐ Maintain storage at least 15 feet from full-time workstations.
- ☐ Block, brace, and securely lock the gauge during "all" transportation.
- ☐ Limit "public" exposure to gauge while in use.
- ☐ Provide sketch of gauge storage to RSO.

18.0 ACKNOWLEDGMENT STATEMENT

As an employee of TRC, I have reviewed the Health and Safety Plan (HAS Plan). I hereby acknowledge that I have received the **required level of training and medical surveillance**, that I am knowledgeable about the contents of this HAS Plan, and that I will use personal protective equipment (PPE) and follow procedures specified in the HAS Plan.

Signatures of TRC Site Personnel:

_____	Date:	_____
_____	Date:	_____
_____	Date:	_____
_____	Date:	_____
_____	Date:	_____
_____	Date:	_____
_____	Date:	_____
_____	Date:	_____
_____	Date:	_____

19.0 FIELD OBSERVATION DOCUMENTATION

If this project has been selected as a field observation candidate, the observer will review a copy of this HAS Plan and make comments, edits, additions, or deletions on the copy. The observation copy of this document will then be forwarded to the office HSC for review. After review, the HSC will then forward the copy to the Project Manager for review and filing.

_____ (observer) Date: _____

FIGURES

Main Entrance on
Wellington Road

Location Overview

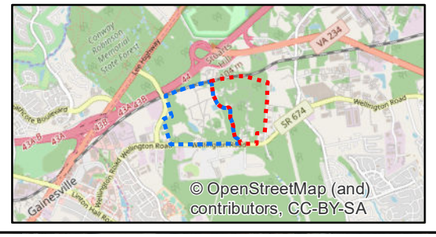

Site Features

- Gainesville Parcel
- Sharpless Parcel

500 250 0 500
Feet

N

Site Location

Atlantic Research Corporation, Gainesville, Virginia

TRC Environmental Inc.
11231 Cornell Park Drive
Cincinnati, Ohio 45242

Figure 1

Project: 229931.0000.0000

9/28/2018

G:\GIS_Projects\GIS_SEQUA\Gainesville\MXD\2018_Vor\MP-F01_20180924o.mxd

FIGURE 2A

PRINCE WILLIAM HOSPITAL
8700 Sudley Road
Manassas, VA
(703) 369-8000

ROUTE TO HOSPITAL

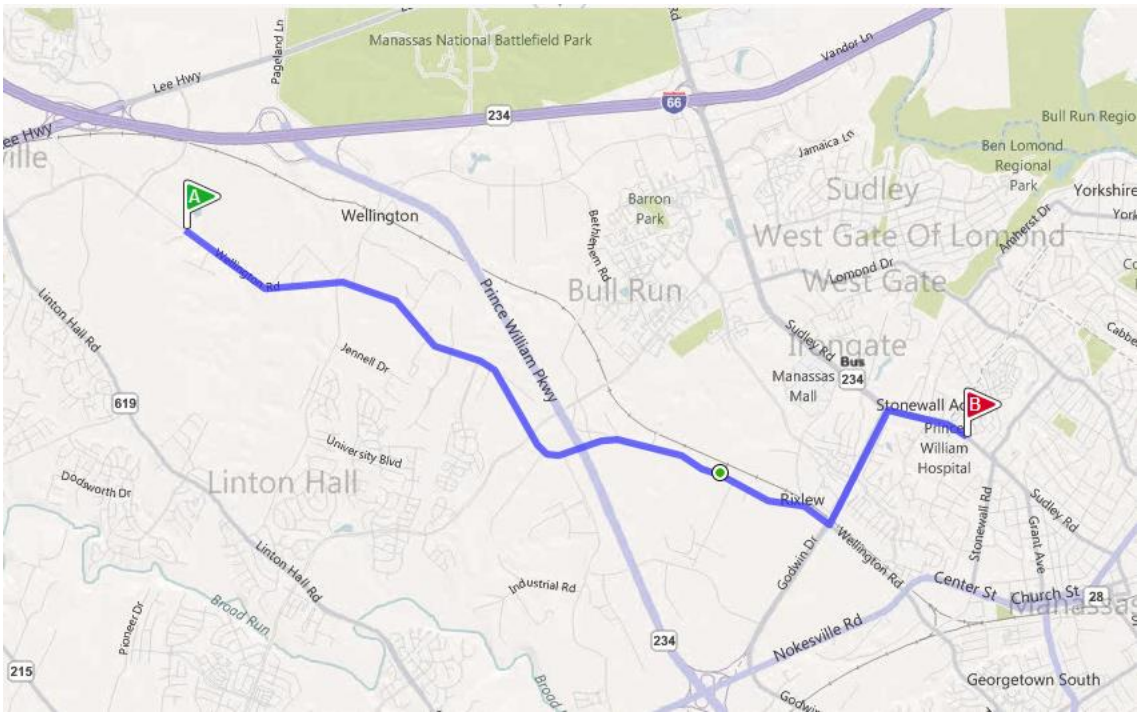

Written Directions to Hospital from Site:

Turn left out of the site onto Wellington Road (5.3 mi.). Turn left onto Godwin Drive (0.9 mi). Turn right onto SR-234 Bus South / Sudley Road (0.6 mi.).

Total Distance: 6.8 miles **Estimated Travel Time: 18 min.**

FIGURE 2B

GAINESVILLE URGENT MEDICAL CARE
(703) 753-7797
7588 Gardner Park Drive
Gainesville, Virginia 20155
(see attached map)

ROUTE TO URGENT CARE FACILITY

Written Directions to Urgent Care Facility from Site:

Turn right out of the site onto Wellington Road (0.4 miles). Turn right onto University Boulevard (0.9 miles). Turn left onto US-29 South / Lee Highway (1.9 miles). Turn right on Gardner Park Drive (0.1 miles).

Total Distance: 3.3 miles **Estimated Travel Time: 5 min.**

APPENDIX I

FORMS

PROJECT/FIELD SAFETY OBSERVATION FORM

Project Name: _____ Office Location: _____

Project Number: _____ Date of Audit: _____

	General	Yes	No	N/A	Corrective Action Notes
1	For TRC projects with temporary offices, are OSHA and job-site warning posters posted and are job-site injury records kept?				
2	Are all TRC personnel current on training requirements (i.e., 40-Hour HAZWOPER, 8-Hour Refresher)?				
3	Is training documentation for TRC employees available on-site?				
4	Are appropriate TRC personnel current with medical surveillance protocol?				
5	Is at least one TRC employee on-site currently trained in CPR and First Aid?				
6	Is there a stocked first aid kit located near/in job trailers?				
7	Are all containers labeled to clearly identify their contents?				
8	Are hot work zones established for hazardous waste operation and enforced?				
9	Are compressed gas cylinders being used on-site properly secured?				
10	Are daily, pre-work safety meetings being held?				
TRC Subcontractors					
11	Were subcontractors qualified for the project by using TRC's subcontractor H&S Qualification form?				
12	Are subcontractors using appropriate personal protective equipment to protect their employees?				
13	Have all non-TRC employees on-site been informed as to possible hazards?				
14	Does the subcontractor have a stocked first aid kit in their job trailer?				
TRC H&S Plan					
15	Has the H&S plan been reviewed and signed by all on-site TRC personnel?				
16	Are H&S procedures listed in the TRC H&S plan being followed by TRC personnel?				
17	Does the TRC H&S plan address all apparent hazards at this site?				
18	Is the TRC H&S plan specific to the Project operations/TRC project responsibilities?				
19	Is appropriate PPE identified on the TRC H&S plan?				
20	Is the PPE being utilized by TRC personnel as directed in the H&S plan?				
21	Are medical facilities identified on the TRC H&S plan?				

Check Yes, No or N/A for each item

For all non-compliant responses, enter description and corrective action(s) on notes page

PROJECT/FIELD SAFETY OBSERVATION FORM

Project Name: _____ Office Location: _____

Project Number: _____ Date of Audit: _____

	Hazard Communication	Yes	No	N/A	Corrective Action Notes
22	Are MSDSs for TRC-supplied materials available?				
23	Are MSDS for subcontractor-supplied materials available?				
24	Have employees received hazard communication training?				
25	Are hazardous substances clearly marked?				
26	Is there an Emergency Response Plan in place in case of unintentional release (i.e., spill kit)?				
	Fire Protection/Prevention				
27	Is fire-fighting equipment available and in proper working condition?				
28	Have TRC personnel been trained in use of fire-fighting equipment?				
29	Are "no smoking" signs posted in appropriate locations?				
	Electrical/Power Tools				
30	Are electrical dangers posted?				
31	Are ground fault circuit interrupters used?				
32	Are terminal/discount/breaker dead front boxes equipped with covers?				
33	Have known underground/overhead utilities been identified and clearly marked?				
34	Are power tools properly grounded or double insulated?				
35	Are mechanical ties and guards in use with power tools?				
36	Is there an appropriate Lockout/Tagout (LOTO) procedure in place?				
	Ladders				
37	Are ladders inspected and properly maintained (e.g., not painted)?				
38	Are ladders properly secured to prevent slipping, sliding, or falling?				
39	Do side rails extend 36 inches above the top of the landing?				
40	Are stepladders fully open when in use?				
41	Are metal ladders being used around electrical equipment?				

Check Yes, No or N/A for each item

For all non-compliant responses, enter description and corrective action(s) on notes page

PROJECT/FIELD SAFETY OBSERVATION FORM

Project Name: _____ Office Location: _____

Project Number: _____ Date of Audit: _____

	Scaffolding	Yes	No	N/A	Corrective Action Notes
42	Have employees received training in proper scaffold use?				
43	Is there a competent person on-site?				
44	Are all connections secure and scaffold equipment in good working order?				
45	Is scaffold tied into structure when it exceeds 4 times the base width of the scaffold?				
46	Are working areas free of debris, snow, grease, ice?				
47	Are workers protected from falling objects?				
48	Is the scaffold plumb and square with cross-bracing?				
49	Are guard rails, intermediate rails, toe-boards, and end rails in place for scaffolds over 10 ft.?				
	Manholes and Permit-Required Confined Space Entry				
50	Has access and egress been provided?				
51	Has an entry permit been obtained?				
52	Have hazards been properly identified?				
53	Is air monitoring equipment on-site, appropriate, calibrated, and in use?				
54	Are areas being ventilated before entry and during occupation?				
55	Have entrant, attendant, and rescue personnel been identified?				
56	Is proper rescue equipment on-site? Inspected?				
57	Is appropriate lighting provided?				
	Motorized Vehicles				
58	Have operators received training?				
59	Are brakes, lights, horn, seat belts, backup lights or warning signals intact and functioning?				
60	Are personnel carried in a safe manner?				
61	Are fire extinguishers carried, if appropriate?				

Check Yes, No or N/A for each item

For all non-compliant responses, enter description and corrective action(s) on notes page

PROJECT/FIELD SAFETY OBSERVATION FORM

Project Name: _____ Office Location: _____

Project Number: _____ Date of Audit: _____

	Excavations	Yes	No	N/A	Corrective Action Notes
62	Are excavations inspected daily?				
63	Is there any excavation entry by TRC staff?				
64	Is the competent person overseeing the trenching excavation work on-site?				
65	Is shoring, sloping or benching appropriate?				
66	Is access and egress provided for employees working in excavations of 4 feet or greater in depth?				
67	Are materials stored within 2 feet of the excavation?				
68	Is the excavation barricaded?				
69	Have soils been classified (if sloping and benching is used as the protective system for employees)?				
	Water Safety				
70	Are watercraft inspected before use for leaks, damage, etc.?				
71	Is necessary emergency gear (life jackets or rings, fire extinguishers, flares, etc.) available?				
72	Are employees trained on proper safety protocols involving wading and walking in water?				
73	Are employees using the "buddy system" when taking samples in water?				
	Other Items				
74					
75					
76					
77					
78					
80					

HSC Signature: _____ **Date:** _____ **PM Signature:** _____ **Date:** _____

Check Yes, No or N/A for each item

For all non-compliant responses, enter description and corrective action(s) on notes page

PROJECT/FIELD SAFETY OBSERVATION FORM

Notes Page

Item #	Comments and Corrective Actions	Deadline for Correction(s)	Date Complete	Initials

HSC Signature:	**Date:**
PM Signature:	**Date:**

HEALTH & SAFETY
DIRECT READING INSTRUMENT LOG

Daily Hazard Review Topic:

Acknowledgment Statement:

I hereby acknowledge that I have reviewed the contents of this site-specific HSP and the daily safety meeting topic, and that I will use the applicable personal protective equipment (PPE) and follow the procedures specified in the HSP.

Signatures of all on-site personnel, including sub-contractors and direct-hires (Required):

_____	Date:	_____
_____	Date:	_____
_____	Date:	_____
_____	Date:	_____
_____	Date:	_____
_____	Date:	_____
_____	Date:	_____
_____	Date:	_____
_____	Date:	_____
_____	Date:	_____
_____	Date:	_____