Exemptions on this page are pursuant to 5 U.S.C. § 552 (b)(4)

APPENDIX F

U.S. ATTORNEY'S OFFICE BUILDING
GSA SFO NO. 16260
SPRINGFIELD, ILLINOIS
PRELIMINARY & TENATIVE SCHEDULE
JONES-BLYTHE CONSTRUCTION CO. DATED 10/2/01

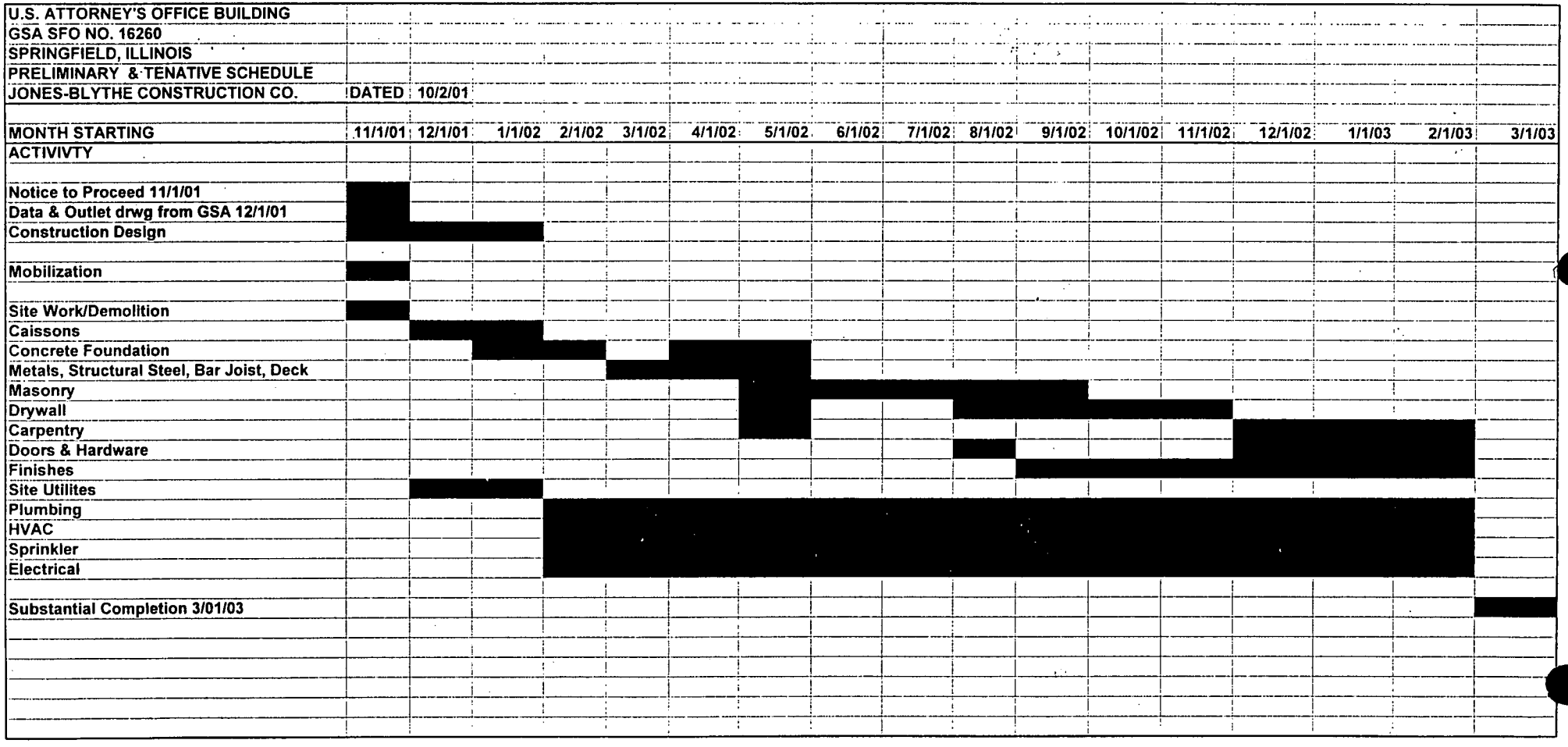

LESSOR: _____

GOV'T: _____

E

STANDARD FORM 2 FEBRUARY 1965 EDITION GENERAL SERVICES ADMINISTRATION FPR (41 CFR) 1-16.601	**U.S. GOVERNMENT LEASE FOR REAL PROPERTY**	
DATE OF LEASE	NOV 13 2001	LEASE NO. GS-05B-16260

THIS LEASE, made and entered into this date by and between

St. Andrew's Building Corporation
whose address is 831 East Monroe Street
Springfield, Illinois 62701

and whose interest in the property hereinafter described is that of owner, hereinafter called the Lessor, and the UNITED STATES OF AMERICA, hereinafter called the Government:

WITNESSETH: The parties hereto for the consideration hereinafter mentioned, covenant and agree as follows:

1. The Lessor hereby leases to the Government the following described premises:

   Approximately 43,600 rentable square feet of office and support space in a newly constructed single tenant three-story office building to be located on the northeast corner of 6th & Capital Streets, Springfield, Illinois. The rentable space shall yield a minimum of 30,000 to a maximum of approximately 32,000 occupiable square feet of space. The Government's space will be located on the first, second, and third floors as depicted in Appendixes A, B, and C. The Government also shall have approximately 22 on-site inside building parking spaces for its exclusive use. Space is to be used for such purposes as determined by the General Services Administration according to its lease agreement.

   The outside parking portion of the premises is cross hatched on the site survey plan depicted in Appendix D. Parking is subject to the reservation set forth in Item No. 18 of Attachment A. How MANY

2. The Government shall have and hold said premises with their appurtenances for the term commencing upon substantial completion on March 1, 2003 and ending on February 28, 2018, subject to termination and renewal rights as may be herein set forth. The commencement date of March 1, 2003 is the estimated effective date of the lease for purposes of payment of rent. If the actual effective date is different from March 1, 2003, the revised actual date will be established by a subsequent Supplemental Lease Agreement to the Lease and be in effect for fifteen (15) years thereafter, computed from the actual effective date. The actual effective date will be the date of substantial completion of the space in accordance with the terms of the lease.

3. The Government shall pay the Lessor annual rent of $1,199,000.00 at the rate of $99,916.66 per month in arrears. Rent for a lesser period shall be prorated. Rent checks shall be made payable to:

   St. Andrew's Building Corporation
   831 East Monroe Street
   Springfield, Illinois 62701

INITIALS: _____ & _____
LESSOR GOV

E

4. The Government may terminate this lease at any time effective on or after February 28, 2018 by giving at least 120 days' prior written notice to the Lessor and no rental shall accrue after the effective date of termination. Said 120 days shall be computed commencing with the day after the date of mailing of the notice.

5. The Lessor shall furnish to the Government, as part of the rental consideration, those services, utilities, maintenance of systems, space improvements, with the exception of janitorial services and electricity and gas utilities, as noted below and as specified in Solicitation for Offers No. GS-05B-16260.

   The Lessor shall furnish separate and adequate metering facilities (without cost to the Government) to permit the Government to make separate payments for electricity and gas utilities for the operation of the facility. The Lessor shall furnish the Contracting Officer, prior to occupancy by the Government, written verification of the meter numbers and certification that these meters only measure the Government's usage. Upon Government's acceptance of the single tenant three-story office building, the electric and gas utilities will be placed in the name of the Government for payment.

6. The following are attached and made a part hereof:

   (a) Attachment A to Standard Form 2, Lease No. GS-05B-16260, consisting of Paragraph Nos. 7 through 29 (6 pages); the block plans known as Appendixes A, B & C; Site Survey Plan known as Appendix D; Site Deed known as Appendix E; Solicitation for Offers No. GS-05B-16206 (38 pages); Overall Special Requirements (57 pages); Special Requirements (49 pages); Amendment No 1. (5 pages); Amendment No. 2 (7 pages); Amendment No. 3 (19 pages); Amendment No. 4 (1 page); GSA Form 3517, General Clauses, Revised 9/94 (25 pages); GSA Form 3518, Certifications and Representations, Revised 6/93-WP (6 pages); GSA Form 1217, Lessor's Annual Cost Statement; Preliminary & Tentative Schedule, Jones-Blythe Construction Co., dated 10/2/2001, & Attachment II known as Appendix F; Safety and Environmental Management Memorandum, dated 7/2/99, know as Appendix G; and Certificate of Procurement Integrity (1 page). .....Continence of Standard Form 2, on Attachment A

IN WITNESS WHEREOF, the parties hereto have hereunto subscribed their names as of the date first above written.

LESSOR St. Andrew's Building Corporation

(b) (6) [redacted]

TREASURER

(Signature) (Title) (Signature) (Title)

WILLIAM R. ENLOW HARVEY M. STEPHENS

IN PRESENCE (b) (6) [redacted]

831 E. MONROE ST. SPRINGFIELD IL 62701

(b) (6) [redacted] (Address)

UNITED [redacted] ES ADMINISTRATION

BY [redacted] CLAIR JONES Contracting Officer

(Signature) (Official title)

INITIALS: LESSOR & GOV

E

STANDARD FORM 2

ATTACHMENT A
LEASE NO. GS-05B-16260
PAGE 1 of 6

(b) Amendment No. 1, dated December 5, 2001 to General Clauses, GSA Form 3517, Solicitation for Offers No. GS-05B-16260, consisting of 5 pages; with amendments to Paragraph Nos. 1 (f), 2, 10, 11, 16 (a)(2) and (b), 19, 20 (c), 25(b) and 33 (a); and with paragraph No. 12 deleted in its entirety.

(c) Amendment No. 2, dated December 5, 2001, to Solicitation for Offers No. GS-5B-16260, consisting of 5 pages; with amendments to Paragraph Nos. 1.1(a), 1.3 (b), 1.4, 1.6 , 3.1, 3.5, 3.6 (a) & (d), 3.11, 3.13, 4.1, 6.13(b), 7.4, and 8.10; and with paragraph Nos. 1.5, and 1.7 (b)(6) are deleted in their entirety.

(d) Amendment No. 3, dated 12/05/01, to Solicitation for Offers No. GS-05B-16260 - Pertaining to Executive Orders 13123 & 13102 consisting of 19 pages; with amendments to Paragraph Nos. 4.1, 5.10, 5.2, 5.3, 6.2, 6.3, 6.6, 6.7, 6.16, 7.9, 8.6, and 8.8; and with new paragraph Nos. 4.12, 4.13, 4.14, 5.17, 5.18, 5.19, 5.20, 5.21, 6.19, and 7.12 added.

(e) Amendment No. 4, dated 8/6/01, to Solicitation for Offers No. GS-05B-16260 Government Satellite Dish Antenna, consisting of 1 page.

(f) The additional statement added to Paragraph No. 4.1, at Item No. 14 of Amendment No. 2 shall not be deleted pursuant to the provisions of Item No 1. of Amendment No.3.

7. The following changes were made to the lease prior to its execution: GSA Form 3517, for Solicitation for Offers No. GS-05B-16260, 1.1(c), 1.5, 1.7, 1.9, 1.10, and 1.11 all deleted.

8. (a) It is mutually agreed that the Lessor will provide the space in conformance with the Government's revised June 7, 1999 space layout drawings and subsequent final revisions.

(b) The total rentable square feet indicated in Paragraph No. 1, 43,600 rentable square feet, is subject to adjustment either downward or upward with the actual rentable square foot number determined by actual field measurements. However, the upward adjustment shall not exceed 43,600 rentable square feet. If the actual rentable square footage is different than the amount stated in Paragraph No. 1, a Supplemental Lease Agreement will be issued showing an adjustment of the actual amount of space.

(c) It is mutually understood and agreed that the Government shall have exclusive use of the entire building and all inside parking spaces, and that any such usage is reflected in the Government's annual rent. Therefore, the Lessor's total rentable square feet will include the building's entire interior parking area which shall be available for the Government's exclusive use.

If there is any adjustment in the actual amount of rentable space delivered, the annual rent stated in paragraph No. 1 herein will be adjusted at the rate of $27.50 per rentable square foot.

INITIALS: _____ & _____
LESSOR GOV

E

9. The Government shall provide the Lessor the Government's final revised space layout drawings, including electrical and data outlets, by December 1, 2001. The Lessor will deliver the space to GSA within 450 calendar days after the receipt of the Government's final revised layout drawings. The space buildout will be completed in accordance with the space layout drawings, the requirements of the SFO, as well as the terms, conditions, and provisions of this lease.

10. It is mutually understood that the building's name and the placement of any sign identifying the building's name, as well as the placing of any attribution and recognition plaque in or about the building must be agreed upon by both the Lessor and the Government. See attached Amendment No. 2, dated 8/6/01, to Solicitation for Offers No. GS-05B-16260, item No. 14.

11. In accordance with Paragraph No. 3.4 of Solicitation for Offers No. GS-05B-16260 titled "Tax Adjustment" for real estate tax escalation purposes, the Government occupies 100% of the building's total rentable square feet. The Lessor's annual rent does not reflect real estate taxes. The Government's percentage of occupancy is subject to downward adjustment, based upon actual percentage of the Government's occupation of the rentable space. Lessor's Taxpayer Identification No. (TIN): (b) (4) [redacted]

12. In accordance with paragraph 3.6 of the Solicitation for Offers, No. GS-05B-16260, the base for operating costs is (b) (4) per rentable square foot, plus annual escalations.

13. (a) In accordance with paragraph No. 1.15 entitled "Labor Standards," the Lessor shall comply with the current prevailing wage rates for building construction projects in Sangamon County, Illinois. See Appendix F.

(b) Lessor must acquire a Performance Bond for the construction of the single tenant three-story office building to be located on the northeast corner of 6th & Capital Streets, Springfield, Illinois to meet the terms and requirements of the Government's lease agreement. The Lessor will issue a copy of the Performance Bond to the Contracting Officer.

HVAC OT NOTE

14. There will be no additional costs for the Government's use of its space beyond the Government's normal working hours specified in Paragraph 7.1 of Solicitation for Offers No. GS-05B-16260.

15. It has been established that the Lessor's Contract Establishment Code Number (DUNS) (b) (4) [redacted] The General Services Administration Building No. is IL2448.

16. (a) Building and routine systems maintenance shall take place during normal business hours, unless otherwise agreed upon by the Government's tenant and GSA's Contracting Officer or the designated Contracting Officer Representative. This schedule shall be provided to the Contracting Officer or his designated representative within 30-60 days after occupancy by the Government, in accordance with the lease agreement.

(b) Lessor shall ensure that the lighting levels conform to the SFO requirements upon the Government's actual occupancy and placement of furniture and equipment.

INITIALS: LESSOR & GOV

E

(c) The parking area shall be striped, graded as needed for proper drainage, lighted to commercial standards and properly maintained.

17. In accordance with paragraph 7.6 of the Solicitation for Offers, the Lessor will be responsible for all Flag Displays.

18. The outside parking portion of the premises east of the single tenant three-story office building shown crossed on Appendix D is legally described as follows:

The East 26.25 feet of the West 140 feet of Lots 7, 10 and 11 of the South Half of Block 1 of E. Iles Addition Springfield, Illinois.

Said outside parking portion of the premises is reserved by Lessor for the use and occupancy of the First Presbyterian Church of Springfield, Illinois, its members, pastors, employees, invitees, licensees, Church visitors, successors and assigns, for the primary purpose of access to the rear of the First Presbyterian Church of Springfield, Illinois, and its Church Properties and a Parking lot or other use associated with the adjoining Church property of the owner to the East. Lessor will be solely responsible for the real estate taxes attributable to the reserved space. Lessor agrees that it will cause no improvements to be erected on the reserved space which would unreasonably interfere with the Lessee's use and enjoyment of the office building occupied by Lessee. Lessee, at its option, may at any time during the lease term place fences along Capital Avenue on the South and the Alley on the North and install gates to restrict access to the reserved space to members of the First Presbyterian Church of Springfield, Illinois, its Pastors, employees, agents, invitees, licensees, Church visitors, successors and assigns. If the Lessee places fences or gates on the reserved space, the same must be complimentary to and enhance the Church architecture and appearance and to be at the cost of Lessee. Any devices for entry to the reserved space will be made available only to the Church its members, pastors, employees, agents, invitees and licensees and the Lessee's security personnel.

19. In accordance with Paragraph No. 3.1 titled "Unit Cost For Adjustments" of the Solicitation for Offers No. GS-05B-16260 as amended, the following are unit costs to enable an equitable settlement if the Government layout departs from final revisions to the revised June 7, 1999 space layout drawings:

Telephone Outlet, Wall-Mounted
Telephone Outlet, Floor-Mounted

Data Outlet, Wall-Mounted
Data Outlet, Floor-Mounted

Dedicated Electrical Outlet, Wall-Mounted
Dedicated Electrical Outlet, Floor-Mounted

(b) (4) [redacted]

INITIALS: _____ & _____
LESSOR GOV

E

Dedicated Electrical Outlet, Wall- Mounted (20 AMP)
Dedicated Electrical Outlet, Floor-Mounted

Fourplex Electrical Outlet, Wall-Mounted
Fourplex Electrical Outlet, Floor-Mounted

Dedicated Electrical Clean Computer Outlet

Chair Rail
(Provide, install and finish)

Ceiling-High Partitions w/STC of 40
(Taped, sanded, painted and/or finished)
Ceiling-High Partitions w/STC of 45
(Taped, sanded, painted and/or finished)

Slab-to-slab Partitions
(Taped, sanded, painted and/or finished)

Vinyl wall covering, not less than 13 oz.

Interior Doors w/ lockset
(Includes hardware, frame and finishing)

Interior Doors w/Door Lite
(Includes hardware, frame and finishing)

Interior Doors w/minimum throw of 1 " lock
(Includes hardware, frame and finishing keyway)

Deadbolt - Mortise type, cylinder operated w/ a minimum 1" throw

The cost per square foot of security mesh

(b) (4) [redacted]

* Items denoted NIC in Amendment No. 2 refer to "Not In Contract."

20. (a) It is mutually agreed between the parties that the amounts of outlets and partitioning, stated in the lease will be based upon the Government's final revisions to the revised June 7, 1999 space layout drawings. If the Government deviates from the approved final revised space plans, and it results in the Lessor incurring additional costs, the Government will use the unit costs listed in the preceding paragraph to make lump sum payment(s) to the Lessor.

Note to Theben

INITIALS: _____ & _____
LESSOR GOV

E

(b) It is mutually understood that the Government's required space alterations changes such as those listed below, as well as any subsequent alterations or space changes, will be accomplished as a change order and/or amendment to the lease. All costs incurred by the Lessor will be mutually agreed upon and paid by lump sum payment(s) to the Lessor.

1. Special Requirements, dated June 3,1997, to Solicitation for Offers No. GS-05B-16260, page No. 50 of 57, paragraph entitled "Room: ADP Room Size: 200" is hereby amended to read "Room: ADP Room, Size: 400" of the lease. The preceding space change will result in the Government incurring an additional cost of [redacted] for operating equipment. The Government must approve all required additional equipment.

2. The U.S. Attorneys' "Locking Hardware Specification EOUSA/SPS," dated October 19, 2001, shall supersede the applicable security hardware standards outlined in the Special Requirements, dated June 3, 1997, of the lease agreement 's Solicitation for Offers No. GS-05B-16260.

3. The Lessor will disconnect, relocate and reinstall the U.S. Attorneys' sound system, cameras, and special media lights from its present space in Conference Room 4B in the Paul Findley U.S. Courthouse, located at 600 East Monroe Street, Springfield, Illinois, to its designated room(s) in the new single-tenant office building. All equipment must be fully operational upon relocation.

21. The Phase I and II environmental audits have been conducted. The Phase II consultant has completed field work and soil cores have been analyzed. The Phase II consultant estimated the cost of environmental remediation at the site at approximately $10,000.00. If prior to February 1, 2002, it is determined by the EPA, Lessor, or its contractor that environmental remediation will exceed the cost identified in Phase II by more than $10,000.00, or substantial delays in construction will result from such remediation, closure or other government regulation, then Lessor will immediately notify the Government of such determination, and the parties will thereupon attempt to reach a mutually agreeable change in the awarded lease. If such agreement cannot be reached by March 1, 2002 and Lessor is then unwilling to proceed with the project in light of such additional cost or delay, then either party may terminate the lease. Such termination will not preclude the right of the Government, owner or Lessor to seek remedies available under the law for such contamination and remediation or the Government/Lessor/Contractor expenses associated with the lease.

22. It is mutually agreed that a review session will be held with the Lessor's representative and its builder in accordance with the Government's letter of October 18, 2001 concerning the following items:

- The architectural rhythm and flow of the building façade with respect to the last bay of windows.
- Due to the proximity of the building's first floor windows to the surface of the sidewalk, the appropriate use of strengthened glass.

Any issue(s) concerning the preceding will be mutually agreed upon by the Lessor and the Contracting Officer.

INITIALS: _____ & _____
LESSOR GOV

E

Any issue(s) concerning the preceding will be mutually agreed upon by the Lessor and the Contracting Officer.

23. It is mutually understood and agreed that no "stained-glass church windows" will be incorporated into the construction of the single-tenant office building to be built to meet the terms and requirements of the Government's lease agreement.

24. It is agreed by the parties hereto that all terms and conditions of this lease as expressly contained herein represent the total obligations of the Lessor and the Government. This agreement may be amended where required by law, federal regulation or executive order, or otherwise only in accordance with the terms of any of documents that are a part of this lease agreement, by written instrument executed by the Government.

25. (a) The Government will be given at least 90 days' prior written notice if the Lessor is to sell or transfer ownership of the single tenant three-story office building.

(b) If the single tenant three-story office building is sold or transferred, the following information is required before the Government can acknowledge the Successor in interest and change the Payee for rent or other payments"

1. Evidence of the transfer of title including a certified copy of the deed.
2. A letter from the Successor-Lessor (Transferee) " assuming, approving, and adopting the Lease and agreeing to be bound by its terms."
3. A letter from the Lessor (Transferor) waiving all rights under the Lease as against the United States of America, except unpaid rent through a specified date, usually the date of the ownership transfer.
4. The IRS Tax Identification Number for the new owner.

26. The Contracting Officer represents the General Services Administration as an agent with the authority to enter into the lease on behalf of the Government and who will execute his document in his or her official capacity only, and not as an individual.

27. The names of the officers of the St. Andrew's Building Corporation authorized to bind the corporation are as follows: William R. Enlow, President & Director; Mike Orr, Secretary & Director; Harvey M. Stephens, Treasure & Director; Duane Slater, Director; and Gordon McLean, Director

Any two of the above members are authorized and approved to bind the St. Andrew's Building Corporation.

28. To the conflicts extent this Standard Form 2, U. S. Government Lease For Real Property, and Attachment A, with the terms of the lease documents (excluding Attachment A) referenced in Item No. 6 of this lease, said lease documents will control.

29. It is mutually agreed that the Lessor will comply with the Government's Safety and Environmental Management Memorandum dated July 2, 1999, attached as Appendix G.

INITIALS: _____ & _____
LESSOR GOV

(b) (6), (b) (5)

(b) (5)

(b) (5)

PLAT OF SURVEY

APPENDIX D

PARCEL 1 THE WEST 113.75 FEET OF LOTS 7, 10, AND 11 OF THE SOUTH HALF OF BLOCK 1 OF E. ILES ADDITION, SPRINGFIELD, ILLINOIS, CONTAINING 0.41 ARCES, MORE OR LESS.

PARCEL 2 THE EAST 26.25 FEET OF THE WEST 140.00 FEET OF LOTS 7, 10, AND 11 OF THE SOUTH HALF OF BLOCK 1 OF E. ILES ADDITION, SPRINGFIELD, ILLINOIS, CONTAINING 0.09 ARCES, MORE OR LESS.

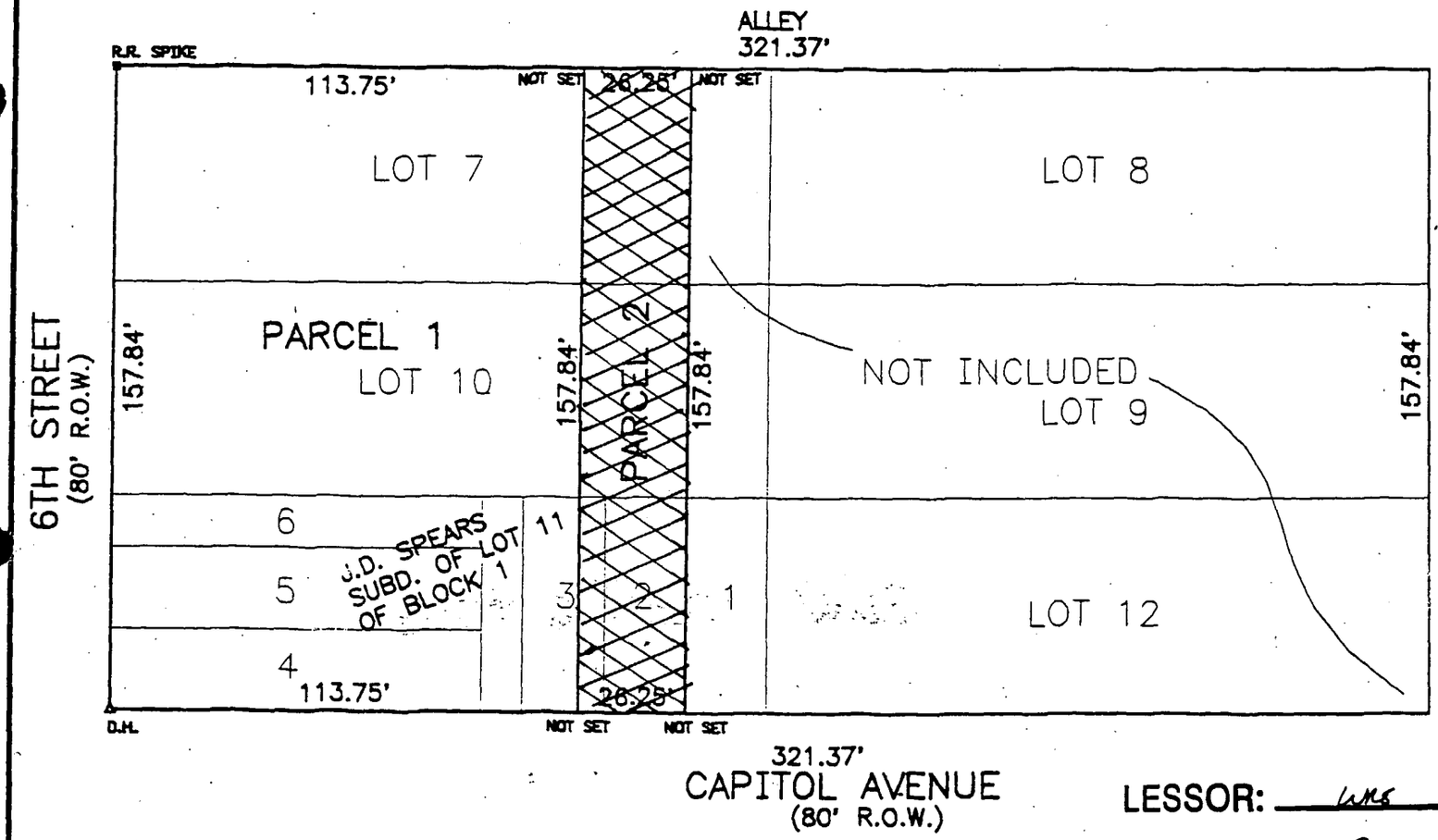

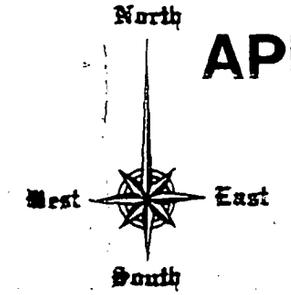

DRILL HOLE

R.R. SPIKE

SCALE 1" = 40'-0"

0 40' 80' 120'

DECEMBER, 2000

SURVEYOR HAS MADE NO INVESTIGATION OR INDEPENDENT SEARCH FOR EASEMENTS OF RECORD, ENCUMBRANCES, RESTRICTIVE COVENANTS, OWNERSHIP, TITLE EVIDENCE, OR ANY OTHER FACTS, WHICH AN ACCURATE AND CURRENT TITLE SEARCH MAY DISCLOSE.

I DO HEREBY CERTIFY THAT IN THE MONTH OF Dec 2000, A SURVEY WAS MADE UNDER MY DIRECTION OF THE ABOVE DESCRIBED PROPERTY AND THE FOREGOING PLAT CORRECTLY REPRESENTS THE RESULTS OF SAID SURVEY.

JOHN L. RAYNOLDS
35-2254
SURVEYOR
STATE OF ILLINOIS
SPRINGFIELD, ILL.

JOHN L. RAYNOLDS
PROFESSIONAL LAND SURVEYOR
#2254

LESSOR: WMS

GOV'T: G

JOHN L. RAYNOLDS, INC.
LAND SURVEYING, PLANNING & ENGINEERING
5201 S. Sixth St., Springfield, IL 62703-5143
(217)-241-3500

JOB NO.: 2000-199

J:\B\Blythe\plat3.dwg, 10/16/01 11:00:00

SPECIAL WARRANTY DEED

APPENDIX E

THIS SPECIAL WARRANTY DEED, made as of this 1st day of November, 2001, between THE FIRST PRESBYTERIAN CHURCH, a religious corporation, of the City of Springfield, County of Sangamon and State of Illinois, party of the first part, and ST. ANDREW'S BUILDING CORPORATION, an Illinois not-for-profit corporation, of the City of Springfield, County of Sangamon and State of Illinois, party of the second part, WITNESSETH: that the party of the first part, for and in consideration of the sum of TEN DOLLARS ($10.00) in hand paid by the party of the second part, the receipt whereof is hereby acknowledged, by these presents does REMISE, RELEASE, ALIEN AND CONVEY unto the party of the second part, and to its successors and assigns, FOREVER, all of the following described real estate, situated in the County of Sangamon and State of Illinois, known and described as follows, to-wit:

PARCEL 1: The West 113.75 feet of Lots 7, 10, and 11 of the South Half of Block 1 of E. Iles addition, Springfield, Illinois, containing 0.41 acres, more or less.

PARCEL 2: The East 26.25 feet of the West 140.00 feet of Lots 7, 10 and 11 of the South Half of Block 1 of E. Iles addition, Springfield, Illinois, containing 0.09 acres, more or less.

SUBJECT TO:

1. Easements of record or in place;
2. Mineral exceptions and reservations of record, if any;
3. The liens of the taxes for 2000 and subsequent years, which the Grantee assumes and agrees to pay.

RECORDING INFORMATION ONLY

Together with all and singular the hereditaments and appurtenances thereunto belonging, or in any wise appertaining, and the reversion and reversions, remainder and remainders, rents, issues and profits thereof, and all the estate, right, title, interest, claim or demand whatsoever, of the party of the first part, either in law or equity, of, in and to the above described premises, with the hereditaments and appurtenances: TO HAVE AND TO HOLD the said premises as above described, with the appurtenances, unto the party of the second part, its successors and assigns forever.

IN WITNESS WHEREOF, said party of the first part has caused its name to be signed to these presents as of the day and year first above written.

THE FIRST PRESBYTERIAN CHURCH

(b) (6) [redacted]

By [redacted]

LESSOR: _____

GOV'T: _____

CORPORATE ACKNOWLEDGEMENT

STATE OF ILLINOIS)
) SS.
COUNTY OF SANGAMON)

I, Peggi L. Weymouth, a Notary Public in and for the said County, in the State aforesaid, DO HEREBY CERTIFY that HARVEY M. STEPHENS, personally known to me to be the CLERK of SESSION of THE FIRST PRESBYTERIAN CHURCH, a religious corporation, and personally known to me to be the same person whose name is subscribed to the foregoing instrument, appeared before me this day in person, and acknowledged that as such CLERK of SESSION, he signed and delivered the said instrument pursuant to authority given by the Board of Directors of said corporation as their free and voluntary act, and as the free and voluntary act and deed of said corporation, for the uses and purposes therein set forth.

Given under my hand and official seal this 31st day of OCTOBER, 2001 ~~1999~~.

(b) (6) [redacted]

Notary Public

My Commission Expires 7-29-05

OFFICIAL SEAL
PEGGI L. WEYMOUTH
NOTARY PUBLIC, STATE OF ILLINOIS
MY COMMISSION EXPIRES 7-29-2005

Permanent Real Estate Numbers: _____

This Instrument Prepared By:
Barber, Segatto, Hoffee & Hines
P.O. Box 79
Springfield, IL 62705-0079

Return To:
St. Andrew's Building Corporation

Springfield, IL

82108

LESSOR: _____

GOV'T: _____

U.S. GENERAL SERVICES ADMINISTRATION
Great Lakes Region

APPENDIX G

JULY 2, 1999

MEMORANDUM FOR KEELIE MUELLER WITZEL
SPACE DESIGN AND DEVELOPMENT - 5PEP

(b) (6) [redacted]

FROM: MARY SAUSEDA [redacted]
SAFETY AND ENVIRONMENTAL MANAGEMENT
SECTION - 5PMFS

SUBJECT: REVIEW OF SPACE/BLOCK PLAN DRAWINGS
FOR: U.S. Attorney's Office, Springfield, IL
1st, 2nd and 3rd Floors (New Construction)

As requested, we have reviewed the subject submittals for the above location from a fire and life safety standpoint. The submittals included the following:

- Blocking Plans (3rd Revision), SP-1.1, SP-1.2 and SP1.3, dated June 07, 1999

The following comments were submitted in our last review dated 3/30/99:

1. Drawing SP-1.1 - The parking garage shall comply with the requirements of NFPA Standard No. 101, Life Safety Code, latest edition, NFPA 88A, Standard for Parking Structures, latest edition and Building Officials & Code Administrators (BOCA) Building Code, latest edition.

2. Drawing SP-1.1: Provide an exit sign at the north end of the garage in accordance with the requirements of NFPA Standard No. 101.

3. This building (as it is more than two stories tall) requires a manual fire alarm system that must be designed and installed in accordance with NFPA 72, the National Fire Alarm Code, latest edition. We hope this requirement is contained within the lease solicitation and agreement documents.

As of this review, the following comments are provided:

4. Drawing SP-1.3: The highlighted doors to the main conference room shall be recessed and reswung to swing in the direction of egress as it is capable of serving more than 50 persons.

LESSOR: _____

GOV'T: _____

5. The space planning layouts for the 2nd and 3rd floors are considered acceptable.

If you have any questions, please contact me at 6-7574.

LESSOR: WKr

GOV'T:

Amendment No. 1 dated 8/6/01, to General Clauses, GSA FORM 3517, for Solicitation For Offers No. GS-05B-1620, consisting of 5 Pages

GENERAL CLAUSES

1. **Clause No. 1**, entitled **DEFINITIONS**, paragraph (f), "Excusable Delays," is deleted in its entirety from page 3 of Form 3517 and replaced with the following:

   "(f) "Excusable Delays" means delays arising without the fault or negligence of the Lessor and Lessor's subcontractors and suppliers at any tier, and shall include, without limitation, (1) acts of God or of the public enemy, (2) acts or failure to act of the United States of America in either its sovereign or contractual capacity, (3) acts of another contractor in the performance of a contract with the Government, (4) fires, (5) floods, (6) epidemics, (7) quarantine restrictions, (8) strikes, (8) freight embargoes, (10) unusually severe weather, or (11) delays of subcontractors or suppliers at any tier arising from unforeseeable causes beyond the control and without the fault or negligence of both the Lessor and any such subcontractor or supplier."

2. **Clause No. 2**, entitled **SUBLETTING AND ASSIGNMENT** is deleted in its entirety and replaced with the following:

   "SUBLETTING AND ASSIGNMENT

   The Government may sublet any part of the premises but shall not be relieved from any obligations under this lease by reason of such subletting. The Government may at any time assign this lease, and be relieved from all obligations to Lessor under this lease excepting only unpaid rent and other liabilities, if any, that have accrued to the date of said assignment. Any assignment shall be subject to prior written consent of Lessor, which shall not be unreasonably withheld. Lessor has the option to acquire the premises fee simple or by means of a long term ground lease from the legal owner thereof, subject to applicable Federal laws and regulations."

3. **Clause No. 10**, entitled **DELIVERY AND CONDITION**, is deleted in its entirety from page 5 of Form 3517 and replaced with the following:

   "DELIVERY AND CONDITION

   (a) The space must be delivered ready for occupancy as a complete unit. The Government reserves the right to determine when the space is substantially complete. The Government represents that it intends to retain an independent contractor to oversee the construction and relocation to the building of the tenant, to meet regularly

INITIALS: _____ & _____
LESSOR GOVERNMENT

with Lessor's building contractor during the course of construction, and to give its written recommendation to the Contracting Officer, with a copy of same to Lessor, on when the building is substantially complete.

(b) If the premises do not substantially comply with the provisions of this lease, the Contracting Officer may, after notice and reasonable time for Lessor to cure, as determined by the Contracting Officer, in accordance with the Failure in Performance clause of this lease, elect to reduce the rent payment until substantial compliance. The Government shall not be unreasonable in its determination."

4. **Clause No. 11**, entitled **DEFAULT IN DELIVERY**, is deleted in its entirety from pages 5 and 6 of Form 3517 and replaced with the following:

"DEFAULT IN DELIVERY - TIME EXTENSIONS (SEP 1999) (VARIATION)

(a) With respect to Lessor's obligation to deliver the premises substantially complete by the delivery date (as such date may be modified pursuant to this lease), time is of the essence. If the Lessor fails to prosecute the work with the diligence that will ensure its substantial completion by the delivery date or fails to substantially complete the work by such date, the Government may by notice to the Lessor terminate this lease, which termination shall be effective when received by Lessor. The Lessor and the Lessor's sureties, if any, shall be jointly and severally liable for any damages to the Government resulting from such termination, as provided in this clause. The Government shall be entitled to the following damages, except the extent attributable to the Government:

(1) The Government's aggregate rent and estimated real estate tax and operating cost adjustments for the firm term and all option terms of its replacement lease or leases, in excess of the aggregate rent and estimated real estate tax and operating cost adjustments for the term; provided, if the Government procures replacement premises for a term (including all option terms) in excess of the term, the Lessor shall not be liable for excess Government rent or adjustments during such excess part of such term;

(2) All administrative and other costs borne by the Government in procuring a replacement lease or leases;

(3) Such other, additional relief as may be provided for in this lease, at law or in equity.

(4) Damages to which the Government may be entitled under this clause shall be due and payable thirty (30) days next following the date Lessor receives

notice of the findings and decision specifying such damages which have been determined pursuant to the Government's internal disputes procedure.

(b) Delivery by Lessor of less than the minimum ANSI/BOMA usable square footage required by this lease shall in no event be construed as substantial completion, except as permitted by the Contracting Officer.

(c) Notwithstanding paragraph (a) of this clause, this lease shall not be terminated under this clause nor the Lessor charged with damages under this clause, if (1) the delay in substantially completing the work arises from excusable delays and (2) the Lessor, within 10 days of actual notice of any such delay, except to the extent attributable to the Government (unless extended in writing by the Contracting Officer) provides notice to the Contracting Officer of the causes of delay.

The Contracting Officer shall ascertain the facts and the extent of delay. If the facts warrant such action, the delivery date shall be extended, by the Contracting Officer acting in a reasonable manner, to the extent of such delay at no additional costs to the Government. A time extension is the sole remedy of the Lessor."

5. **Clause No. 12**, entitled **PROGRESSIVE OCCUPANCY**, is deleted in its entirety from page 5 of Form 3517.

6. Subparagraphs (a)(2) and (b) from **Clause No. 16**, entitled **DEFAULT BY LESSOR DURING THE TERM**, page 6 of Form 3517 are deleted in their entirety and replaced with the following:

"(a) Each of the following shall constitute a default by Lessor under this lease:

. . . (2) Repeated and unexcused failure by Lessor to comply with one or more requirements of this lease, after the Government's issuance of a written notice to Lessor and Lessor is provided reasonable cure period to correct such requirements, which failures the Government in good faith determines have been unreasonable, shall constitute a default notwithstanding that one or all such failures shall have been timely cured pursuant to this clause.

(b) If a substantial default occurs after notice to Lessor, and provided Lessor is given a reasonable time to cure the default, as determined by the Government, the Government may, by notice to Lessor, terminate this lease for default and if so terminated, the Government shall be entitled to the damages specified in the Default in Delivery-Time Extensions clause. The Government shall not be unreasonable in its determination."

INITIALS: _____ & _____
LESSOR GOVERNMENT

7. **Clause No. 19**, entitled **ALTERATIONS**, is deleted in its entirety from page 7 of Form 3517 and replaced with the following:

"**ALTERATIONS**

The Government shall have the right during the existence of this lease to make alterations, attach fixtures, and erect structures or signs consistent with the Government's mission in or upon the premises hereby leased, which fixtures, additions, structures and signs so placed in, or upon the premises shall be and remain the property of the Government and may be removed or otherwise disposed of by the Government. If the lease contemplates that the Government is the sole occupant of the building for purposes of these clauses, the leased premises include the land on which the building is sited and the building itself. Otherwise, the Government shall have the right to tie into or make any physical connection with any structure located on the property as is reasonably necessary for appropriate utilization of the leased space.

It is understood the Government will not make any significant exterior, structural or mechanical alterations or improvements in or to the leased premises without the prior written consent of the Lessor. The Lessor's consent will not be unreasonably withheld. If Lessor does not respond within twenty one (21) days of the date of written request for consent, consent will be deemed given by Lessor. All alterations will be made at the Government's cost unless otherwise agreed upon by the Lessor and Lessee."

8. The following new paragraph is added to the end of **Clause No. 20** entitled **ACCEPTANCE OF SPACE**, page 7 of Form 3517:

"(c) Lessee shall coordinate with Lessor's contractor on installation of any systems or services Lessee is providing so that no delay in completion of the building will occur. Lessee agrees that determination of "substantially complete" and "substantial completion" as defined in the General Clauses, paragraph No. 1(K), shall be made without respect to any systems or services Lessee is providing."

9. Paragraph (b) of **Clause No. 25** entitled **ASSIGNMENT OF CLAIMS**, is deleted in its entirety and replaced with the following:

"(b) An assignment or reassignment authorized under the Act and this clause shall cover all unpaid amounts payable under this contract, and shall not be made to more than one party at a time, except that an assignment or reassignment may be made to one party as agent or trustee for two or more parties participating in the financing of this contract."

10. Paragraph (a) of **Clause No. 33** entitled **CHANGES**, is deleted in its entirety from page 14 of Form 3517 and replaced with the following:

"(a) The Contracting Officer may at any time, by written order, make changes within the general scope of this lease, to the extent that any increased cost, including but not limited to indirect costs such as the builder's or Lessor's additional delay, financing, and interest costs, shall be first agreed upon by Lessor and Lessee, in any one or more of the following:

(1) Specifications (including drawings and designs);
(2) Work or services;
(3) Facilities or space layout; or
(4) Amount of space (with the consent of the Lessor)."

11. The following sentence is added to the end of paragraph (b) of **Clause No. 33** entitled **CHANGES**, on page 14 of Form 3517:

"The Government acknowledges that the time, conditions, material and labor conditions at the time the Government directs the change to be made will be factors in determining if the cost of the change is reasonable."

73274

INITIALS: _____ & _____
LESSOR GOVERNMENT

Amendment No. 2, dated 8/6/01, to Solicitation For Offers (SFO) No. GS-05B-16260 & Attachment 1 consisting of 7 Pages

SOLICITATION FOR OFFERS

1. **Paragraph 1.1** entitled **AMOUNT AND TYPE OF SPACE**, Section (a) is deleted in its entirety from the Solicitation for Offers and replaced with the following:

   "AMOUNT AND TYPE OF SPACE

   (a) The General Services Administration (GSA) is interested in leasing approximately 43,600 square feet of rentable space. The rentable space must yield a minimum of 30,000 occupiable square feet to a maximum of 32,000 occupiable square feet, available for use by the Government for personnel, furnishings and equipment. Secured heated inside parking spaces shall be provided, as mutually agreed. Outside parking spaces are not required.

   The Government's final space layouts shall be mutually agreed upon by Lessor and Lessee and incorporated in the Lease document."

2. **Paragraph 1.3** entitled **LOCATION: CITY CENTER**, Section (b) "Parking and Transportation" is deleted in its entirety from the Solicitation for Offers and replaced with the following:

   "LOCATION: CITY CENTER

   . . . (b) PARKING AND TRANSPORTATION:
   Lessor will provide a minimum of 22 secured indoor parking spaces subject to the special handicapped accessibility requirements of the Government."

3. **Paragraph 1.4** entitled **LEASE TERM** is deleted in its entirety from the Solicitation for Offers and replaced with the following:

   "LEASE TERM

   The lease term will be for fifteen (15) years firm."

INITIALS: _____ & _____
LESSOR GOVERNMENT

4. **Paragraph 1.5** entitled **OFFER DUE DATE** is deleted in its entirety from the Solicitation for Offers and replaced with the following:

"OFFER DUE DATE

Offers are due by August 15, 2001, and must remain open until September 30, 2001."

5. **Paragraph 1.6** entitled **OCCUPANCY DATE** is deleted in its entirety from the Solicitation for Offers and replaced with the following:

"OCCUPANCY DATE

The premises must be available for occupancy within 480 calendar days after award.

6. **Paragraph 1.7** entitled **HOW TO OFFER**, Section (b)(6), is deleted in its entirety and replaced with the following:

(6) Offers contingent upon Offeror acquiring zoning changes and other governmental permits or authorization necessary to construct lease facility is not acceptable, excepting any permit or authorization as may be required for the Government's satellite dish antenna installation referenced in Amendment No. 4.

7. **Paragraph 3.1** entitled **UNIT COSTS FOR ADJUSTMENTS** is deleted in its entirety and replaced with the following:

"UNIT COSTS FOR ADJUSTMENTS

Several paragraphs in this SFO specify means for determining quantities of materials. These are Government projections to assist the Offeror in cost estimating. Actual quantities may not be determined until after the lease is awarded and the space layout completed. To enable an equitable settlement if the Government layout departs from the projections, the Offeror must list a unit cost for each of these materials. GSA will use each unit cost to make a lump sum payment or rental increase if the amount of material required by the layout is more than specified or take credit from the rental if the amount is less than specified. Offerors are required to state in the offer or in an attachment: See Attachment I titled "Revised Unit Costs For Adjustments."

8. **Paragraph 3.5** entitled **PERCENTAGE OF OCCUPANCY** is deleted in its entirety and replaced with the following:

"PERCENTAGE OF OCCUPANCY

The Government will occupy 100% of the rentable square feet in the building, and shall be responsible for 100% of the real estate taxes.

9. **Paragraph 3.6** entitled **OPERATING COSTS**, sections (a) and (d) are deleted in their entirety from the Solicitation for Offers and replaced with the following:

"(a) Beginning with the second year of the lease and each year thereafter, the Government shall pay adjusted rent for changes in costs for supplies, materials, maintenance, snow removal, landscaping, sewer and water charges and certain administrative expenses attributed to occupancy. Applicable costs listed on GSA Form 1217 (Lessor's Annual Cost Statement), Section I, titled "Estimated Annual Cost of Services and Utilities Furnished by Lessor as Part of Rental Consideration" will be used will be used to determine the base rate for the operating costs adjustments. Annual operating escalation applies only to the determined "annual operating costs."

. . .

(d) In the event of decreases in the Cost of Living Index occurring during the term of occupancy under the lease, the annual rental rate operating cost will not be reduced below the previous year's operating costs."

10. The following Section (f) is added to **Paragraph 3.6** of the Solicitation for Offers entitled **OPERATING COSTS** :

(f) It is understood that the Government will be directly billed and pay for gas and electric utilities, trash and waste removal, security and telecommunications systems and services, and janitorial and recycling services, except as outlined in paragraph No. 7.9 entitled "Janitorial Services" of the SFO."

11. **Paragraph 3.11** entitled **APPURTENANT AREAS** is deleted in its entirety from the Solicitation for Offers and replaced with the following:

"APPURTENANT AREAS

The right to use appurtenant areas and facilities is included, except for outside parking lot facilities. The Government reserves the right to post Government rules and regulations where the Government leases space."

12. **Paragraph 3.12** entitled **ADJUSTMENT FOR VACANT PREMISES**, Section (a), is deleted in its entirety from the Solicitation for Offers and replaced with the following:

"(a) If the Government fails to occupy any portion of the leased premises or vacates the premises in whole or in part prior to the expiration of the firm term of the lease, the

annual rental rate will be reduced for actual operating costs saved due to the Government's vacancy, as mutually determined by the Lessor and Contracting Officer."

13. The following new section is added to **Paragraph 3.13** entitled **EVIDENCE OF CAPABILITY TO PERFORM** of the Solicitation for Offers:

"EVIDENCE OF CAPABILITY TO PERFORM

(c) The Government requires that the Lessee provide a performance and payment bond for any new construction pertaining to Government's space. It is understood the costs of the bonds will be included in the annual rental rate, as well as all development fees, attorney fees and accounting fees."

14. The following new section is added to **Paragraph 4.1** entitled **QUALITY AND APPEARANCE OF BUILDING EXTERIOR** of the Solicitation for Offers:

"QUALITY AND APPEARANCE OF BUILDING EXTERIOR

The name of the building and the right to place a sign identifying the building's name, as well as the right to place an attribution or recognition plaque and any inscriptions on such attribution or plaque in the building shall be agreed upon by the Lessor and Lessee. Any inscriptions on the cornerstone, attribution or recognition plaque also shall be in compliance with all applicable laws."

15. **Paragraph 6.13** entitled **TELEPHONE: DISTRIBUTION AND EQUIPMENT**, Section (b) is deleted in its entirety and replaced with the following:

"(b) The Government shall provide its own telecommunication (voice) service, inside wiring, cabling and equipment in the space to be leased. The Government may contract with another party to have inside wiring and telephone equipment installed. Telecommunication switchrooms, wire closets, and related spaces shall be enclosed. The enclosure shall not be used for storage or other purposes and shall have door(s) fitted with an automatic deadlocking latch bolt with a minimum throw of ½ inch."

16. **Paragraph 7.4** entitled **UTILITIES** is deleted in its entirety from the Solicitation for Offers and replaced with the following:

"UTILITIES

Lessor shall ensure that utilities necessary for operation are provided and all associated costs are included as a part of the established rental rate, except for the costs of utilities paid

directly by the Government. The Government will be directly billed for electric and gas utilities only. Sewage and water services will not be placed in the Government's name."

17. **Paragraph 8.10** entitled **RECYCLING** is deleted in its entirety from the Solicitation for Offers and replaced with the following:

"RECYCLING

The government shall have the right to use the building and premises for recycling and other environmental programs at the Government's cost."

73273

ATTACHMENT I

Solicitation for Offers No. GS-05-16260

Unit Cost For Adjustments

Telephone Outlet, Wall-Mounted
Telephone Outlet, Floor-Mounted

Data Outlet, Wall-Mounted
Data Outlet, Floor-Mounted

Electrical Outlet, Wall-Mounted
Electrical Outlet, Floor Mounted

Electrical Outlet, Wall-Mounted (20 AMP)
Electrical Outlet, Floor Mounted

Dedicated Electrical Outlet, Wall-Mounted
Dedicated Electrical Outlet, Floor-Mounted

Fourplex Electrical Outlet, Wall-Mounted
Fourplex Electrical Outlet, Floor-Mounted

Dedicated Electrical Clean Computer Outlet

Chair Rail

Ceiling-High Partitions w/STC of 40 or more
(Taped, sanded, painted and/or as specified)

Ceiling-High Partitions w/STC of 45 or more
(Taped, sanded, painted and/or as specified)

Slab-to-slab Partitions w/STC of 45 or more
(Taped, sanded, painted and/or finished)

Vinyl wall covering not less than 13 oz.

(b) (4) [redacted]

INITIALS: LESSOR & GOVERNMENT

Unit Costs For Adjustments
Page 2 of 2

(b) (4)

[redacted]

The cost per base feed-telephone/data for Systems Furniture

Dedicated Electrical Clean Computer Outlet

Ceiling-High Partitions w/STC of 40
(Taped, sanded, painted and/or finished)

Interior Door w/lockset
(Includes hardware, frame and finishing)

Interior Door w/lockset w/sidelite
(Includes hardware, frame and finishing)

Interior Doors w/minimum throw of 1" lock
(Includes hardware, frame and finishing)

Deadbolt – Mortise type, cylinder operated w/minimum 1" throw

The cost per square foot of security mesh*

INITIALS: LPR & OJ
LESSOR GOVERNMENT

Amendment No. 3, dated 12/05/00, to Solicitation For Offers "SFO" No. GS-05B-16260 - Pertaining to Executive Orders 13123 & 13102 consisting of 19 Pages

Section 4.0, General Architectural

1. **Paragraph 4.1 entitled QUALITY AND APPEARANCE OF BUILDING EXTERIOR, in Section 4.0, General Architectural,** is deleted in its entirety from the Solicitation for Offers and replaced with the following:

> **"QUALITY AND APPEARANCE OF BUILDING EXTERIOR (JUL 2000) [Modified paragraph]**
>
> The space offered should be located in a modern office building with facade of stone, marble, brick, stainless steel, aluminum or other permanent materials in good condition acceptable to the Contracting Officer. If not in a new office building, the space offered should be in a building that has undergone, or will complete by occupancy, first class restoration or adaptive reuse for office space with modern conveniences. If the restoration work is underway or proposed, then architectural plans acceptable to the Contracting Officer must be submitted as part of the offer. The building should be compatible with its surroundings. Overall the building should project a professional and aesthetically pleasing appearance including an attractive front entrance way. The building should have energy efficient windows or glass areas consistent with the structural integrity of the building, unless not appropriate for intended use. The facade, downspouts, roof trim and window casing are to be clean and in good condition."

2. The following new paragraphs are added to **Section 4.0 General Architectural entitled CONSTRUCTION WASTE MANAGEMENT** of the Solicitation for Offers:

> **"4.12 CONSTRUCTION WASTE MANAGEMENT (JUL 2000) [New paragraph]**
>
> (a) Recycling construction waste means providing all services necessary to furnish construction materials or wastes to organizations which will employ these materials or wastes in the production of new materials. Recycling includes required labor and equipment necessary to separate individual materials from the assemblies of which they form a part.
>
> (b) The Offeror shall submit to the Government their proposal to dispose of or recycle construction waste. Where the small quantity of material, the extraordinarily complex nature of the waste disposal method, or prohibitive

expense for recycling would represent a genuine hardship, the Government may permit alternative means of disposal. This requirement shall also apply to subsequent alternations under the lease.

(c) The Lessor will recycle the following items during both the demolition and construction phases of the project, subject to economic evaluation and feasibility:

(1) Ceiling grid and tile,
(2) Light fixtures, including proper disposal of any transformers, ballasts and fluorescent light bulbs,
(3) Duct work and HVAC equipment;
(4) Wiring and electrical equipment,
(5) Aluminum and/or steel doors and frames,
(6) Hardware,
(7) Drywall,
(8) Steel studs,
(9) Carpet, carpet backing, and carpet padding,
(10) Wood,
(11) Insulation,
(12) Cardboard packaging,
(13) Pallets,
(14) Windows and glazing materials,
(15) All miscellaneous metals (as in steel support frames for filing equipment), and
(16) All other finish and construction materials.

(d) If any waste materials encountered during the demolition or construction phase are found to contain lead, asbestos, PCBs (such as fluorescent lamp ballasts), or other harmful substances, they are to be handled and removed in accordance with State and Federal laws and requirements concerning hazardous waste.

(e) In addition to providing "one-time" removal and recycling of large-scale demolition items such as carpeting or drywall, the Lessor will provide continuous facilities for the recycling of incidental construction waste during initial construction.

(f) Construction materials recycling records shall be maintained and accessible to the Contracting Officer. Records shall include materials recycles or landfilled, quantity, date, and identification of hazardous wastes."

3. The following new paragraphs are added to **Section 4.0 General Architectural entitled EXISTING FIT-OUT, SALVAGED, OR RE-USED BUILDING MATERIAL** of the Solicitation for Offers:

"4.13 EXISTING FIT-OUT, SALVAGED, OR RE-USED BUILDING MATERIAL (JUL 2000) [New paragraph]

(a) Items and material existing in the offered space or to be removed from the offered space during the demolition phase are eligible for reuse in the construction phase f the project. The reuse of items and materials is preferable to recycling them; however, items considered for reuse must be in refurbishable condition, and must meet the quality standards set forth by the Government in this SFO. In the absence of definitive quality standards, the Lessor is to ensure that the quality of the item(s) in question will meet or exceed accepted industry or trade standards for first quality commercial grade applications.

(b) Lessor shall submit a reuse plan to the Contracting Officer. The Government will not pay for existing fixtures and other Tenant Improvements accepted in place. However, the Government will reimburse the Lessor, as part of the Tenant Improvement allowance, the costs to repair or improve such fixtures or improvements identified on the reuse plan and approved by the Contracting Officer."

4. The following paragraphs are added to **Section 4.0 General Architectural entitled INDOOR AIR QUALITY DURING CONSTRUCTION** of the Solicitation for Offers:

"4.14 INDOOR AIR QUALITY DURING CONSTRUCTION (JUL 2000) [New paragraph]

(a) The Lessor shall provide to the Government Materials Safety Data Sheets (MSDS) upon request for the following products prior to their installation or use: adhesives, caulking, sealants, insulating materials, fireproofing or firestopping materials, paints, carpets, floor and wall patching or leveling materials, lubricants, clear finish for wood surfaces and janitorial cleaning products.

(b) The Contracting Officer may eliminate from consideration products with significant quantities of toxic, flammable, corrosive or carcinogenic material and products with potential for harmful chemical emissions. Materials used often or in large quantities will receive the greatest amount of review.

(c) All MSDSs must comply with OSHA requirements. The Lessor and its agents must comply with all recommended measures in the MSDSs to protect the health and safety of personnel.

(d) To the greatest extend possible, Lessor shall sequence the installation of finish materials so that materials that will be high emitters of VOCs are insallted and allowed to cure before installing interior finish materials, especially soft materials that are woven, fibrous, or porous in nature, that may absorb contaminants and release them over time.

(e) Where demolition or construction work occurs adjacent to occupied space, Lessor shall erect appropriate barriers (noise, dust, odor, etc.) and take necessary steps to minimize interference with the occupants. This includes maintaining acceptable temperature, humidity and ventilation in the occupied areas during window removal, window replacement, or similar types of work.

(f) A final flush-out period of 48 to 72 hours should be provided before occupancy. Lessor shall ventilate with 1000 percent outside air at the recommended air change rate (ASHRAE Standard 62) during installation of materials and finishes. If outside air would cause unacceptable inside temperature levels, humidity levels, and/or air quality, an alternate ventilation plan may be submitted to the Contracting Officer for approval."

Section 5, Architectural Finishes

5. The following new paragraphs are added to **Section 5.0 Architectural Finishes entitled RECYCLED CONTENT PRODUCTS (COMPREHENSIVE PROCUREMENT GUIDELINES)** of the Solicitation for Offers:

"5.17 RECYCLED CONTENT PRODUCTS (COMPREHENSIVE PROCUREMENT GUIDELINES) (JUL 2000) [New paragraph]

(a) The Lessor shall comply to the extent feasible with the Resource Conservation and Recovery Act (RCRA), Section 6002, 1976. The Lessor must use recycled content products as indicated in this SFO and as designated by the U.S. Environmental Protection Agency in the Comprehensive Procurement Guidelines (CPG), 40 CFR Part 247, and its accompanying Recovered Material Advisory Notice (RMAN). The CPG lists the designated recycled content products. EPA also provides recommended levels of recycled content for these products. The list of designated products, EPA's recommendations, and lists of manufacturers and suppliers of the products can be found at *www.epa.gov/cpg/products.htm.*

(b) The Offeror, if unable to comply with the CPG and RMAN list, shall submit a request for waiver for each material to the Contracting Officer with initial offers. The request for waiver shall be based on the following criteria:

(1) The cost of the recommended product is unreasonable.
(2) Inadequate competition exists.
(3) Items are not available within a reasonable period of time.
(4) Items do not meet the solicitation's performance standards."

6. The following new paragraphs are added to **Section 5.0 Architectural Finishes entitled ENVIRONMENTALLY PREFERABLE BUILDING PRODUCTS AND MATERIALS (JUL 2000)** of the Solicitation for Offers:

"5.18 ENVIRONMENTALLY PREFERABLE BUILDING PRODUCTS AND MATERIALS (JUL 2000) [New paragraph]

(a) The Lessor shall use environmentally preferable products and materials where economically feasible. Environmentally preferable products have a lesser or reduced effect on human health and the environment when compared to other products and services that serve the same purpose.

(b) Refer to EPA's environmentally preferable products web site, *www.epa.gov/opptintr/epp.* In general, environmentally preferable products and materials do one or more of the following:

(1) Contain recycled material, are biobased, or have other positive enviornmental attributes;
(2) Minimize the consumption of resources, energy, or water;
(3) Prevent the creation of solid waste, air pollution, or water pollution;
(4) Promote the use of non-toxic substances and avoid toxic materials or processes."

7. **PARAGRAPH 5.10 entitled FLOOR COVERING AND PERIMETERS, in Section 5.0 Architectural Finishes,** is deleted in its entirety from the Solicitation for Offers and replaced with the following:

"5.10 FLOOR COVERING AND PERIMETERS (JUL 2000) [Modified paragraph]

(a) Floor covering shall be either resilient flooring or carpet, except as otherwise specified in this solicitation. Floor perimeters at partitions must be

wood, rubber, vinyl, or carpet base. Exceptions must be approved by the Contracting Officer.

(b) OFFICE AREAS:
Prior to occupancy, carpet or carpet tiles, must cover all office areas partitioned or unpartitioned, including interior hallways and conference rooms. The use of existing carpet may be approved by the Contracting Officer; however, existing carpet must be shampooed before occupancy and must meet the static buildup requirement for new carpet.

(c) SPECIALTY AREAS:
Resilient flooring is to be used in reproduction rooms, storage, file and other speciality rooms. The Offeror shall provide Government with a minimum of 7 different color samples. The sample and color must be approved by GSA prior to installation. No substitutes may be made by the Offeror after sample selection.

(d) TOILET AND SERVICE AREAS:
Terrazzo, unglazed ceramic tile, recycled glass tile, and/or quarry tile shall be used in all toilet and service areas unless another covering is approved by the Contracting Officer.

(e) CARPET - SAMPLES:
When carpet must be newly installed or changed, the Offeror shall provide the Government with a minimum of 7 different color samples. The sample and color must be approved by GSA prior to installation. No substitutes may be made by the Offeror after sample selection.

(f) CARPET - INSTALLATION:
Carpet must be installed in accordance with manufacturing instructions to lay smoothly and evenly.

(g) CARPET - REPLACEMENT:
Carpet shall be replaced at least every 6 years during Government occupancy or any time during the lease when:

(1) Backing or underlayment is exposed.

(2) There are noticeable variations in surface color or texture.

Replacement includes moving and return of furniture.

(h) RESILIENT FLOORING - REPLACEMENT:
The flooring shall be replaced by the Lessor at no cost to the Government prior to or during Government occupancy when it has curls, upturned edges, or other noticeable variations in texture."

(i) REIMBURSEMENT:
The requirements of carpet replacement under 5.10 are subject to the Government agreeing in writing in advance of replacement to reimbursing the actual cost of materials and labor therefor, plus interest fixed at 300 basis points over the 10 year U.S. Treasury Note rate quoted at the time of work commencement, amortized over 36 months and payable to Lessor in equal monthly payments of principal and interest in addition to and at the time the monthly rent is due. Notwithstanding the provisions of 5.10(g), the Government may elect to defer carpet replacement beyond the time schedule stated therein.

8. The following new paragraphs are added to **Section 5.0 Architectural Finishes entitled WOOD PRODUCTS (JUL 2000)** of the Solicitation for Offers:

"5.19 WOOD PRODUCTS (JUL 2000) [New paragraph]

(a) For all new installations of wood products, the lessor is encouraged to use independently certified forest products. For information on certification and certified wood products, see web sites for the Forest Stewardship Council or the Certified Forest Products Council at *www.fscus.org/ and www.certifiedwood.org/.*

(b) New installations of wood products used under this contract should not contain wood from endangered wood species, as listed by the Convention on International Trade and Endangered Species (CITES). The list of species can be found at *www.certifiedwood.org/Resources/CITES/CITESContent.html.*

(c) Particle board, strawboard and plywood materials shall comply with HUD Standards for VOC emissions (particleboard: 0.2 ppm of formaldehyde, plywood: 0.3 pp. for formaldehyde)."

9. The following new paragraph is added to **Section 5.0 Architectural Finishes entitled ADHESIVES AND SEALANTS (JUL 2000)** of the Solicitation for Offers:

"5.20 ADHESIVES AND SEALANTS (JUL 2000) [New paragraph]

All adhesives employed on this project (including, but not limited to, adhesives for carpet, carpet tile, plastic laminate, wallcoverings, wood adhesive, or sealants) shall be those with the lowest possible Volatile Organic Compound (VOC)

content below 20 g/L. and which meet the requirements of the manufacturer of the products adhered or involved. The Lessor shall use adhesives and sealants with no formaldehyde or heavy metals."

10. The following new paragraphs are added to **Section 5.0 Architectural Finishes entitled INSULATION - THERMAL, ACOUSTIC, AND HVAC (JUL 2000)** of the Solicitation Offers:

"5.21 INSULATION - THERMAL, ACOUSTIC, AND HVAC (JUL 2000) [New paragraph]

(a) All insulation products shall contain recovered materials as required by EPA's Comprehensive Procurement Guideline and related recycled content recommendations.

(b) No insulation installed with this project shall be material manufactured using chlorofluorocarbons (CFSs), nor shall CFCs be used in the installation of the product.

(c) All insulation containing fibrous materials exposed to air flow must be rated for that exposure or encapsulated.

(d) Insulating properties for all materials must meet or exceed applicable industry standards. Polystyrene products shall meet ASTM C578-91."

11. **PARAGRAPH 5.2 entitled CEILINGS AND INTERIOR FINISHES, in Section 5.0 Architectural Finishes,** is deleted in its entirety from the Solicitation for Offers and replaced with the following:

"5.2 CEILINGS (JUL 2000) [Modified paragraph]

(a) Ceilings must be at least 8 feet and no more than 12 feet measured from floor to the lowest obstruction. Areas with raised flooring must maintain these ceiling height limitations above the finished raised flooring. Bulkheads and hanging or surface mounted light fixtures which impede traffic ways shall be avoided.

(b) Ceilings must have a minimum noise reduction coefficient (NRC) of 0.60 and a minimum Sound Transmission Class (STC) of 40 throughout the Government occupied space.

(c) Ceilings must be a flat plane in each room and suspended with ample light

fixtures and finishes as follows unless an alternate finish is approved by the Contracting Officer:

(1) Restrooms: plaster or pointed and taped gypsum board.

(2) Offices and Conference Rooms: mineral and acoustical tile or lay in panels with textured or patterned surface and tegular edges or equivalent quality to be approved by the Contracting Officer. Tiles or panels must contain recycled content.

(3) Corridors and Eating/Galley Areas: plaster or pointed and taped gypsum board or mineral acoustical tile.:

12. **PARAGRAPH 5.3 entitled WALL COVERINGS, in Section 5.0 Architectural Finishes,** in deleted in its entirety from the Solicitation for Offers and replaced with the following:

"5.3 WALL COVERINGS (JUL 2000) [Modified paragraph]

(a) PHYSICAL REQUIREMENTS:

(1) Prior to occupancy, partitioned offices and open office areas shall be covered with vinyl or polyolefin commercial wall covering weighing not less than 13 ounces per square yard as specified in FS CCC-W-408C or equivalent. The quality of finish shall be approved by the Contracting Officer.

(2) Selected offices and conference rooms as specified below are to be covered with wood paneling or textile covering to be approved by the Contracting Officer.
See Special Requirements dated July 3, 1997 attached to SFO.

(3) Prior to occupancy all restrooms offered to comply with the restroom fixture schedule this solicitation must have ceramic tile in splash areas and vinyl wall covering not less than 13 ounces per square yard as specified in FS CCC-W-408C on remaining wall areas or equivalent quality as approved by the Contracting Officer, unless an alternate finish is approved by the Contracting Officer.

(4) Prior to occupancy all elevator areas which access the Government's leased space, hallways within or accessing the Government's leased space and eating/galley areas within the

Government's leased space are to be covered with vinyl wall coverings not less than 22 ounces per square yard as specified in FS CCC-W-408C, or equivalent quality as approved by the Contracting Officer, unless an alternate finish is approved by the Contracting Officer.

(b) REPLACEMENT:
All wall covering is to be maintained in "like new" condition for the life of the lease. Wall covering must be replaced or repaired at the Lessor's expense, including moving and replacing furnishings, (except where wall covering has been damaged due to the negligence of the Government), anytime during the occupancy by the Government if it is torn, peeling or permanently stained; the ceramic tile in the restrooms must be replaced or repaired if it is loose, chipped, broken or permanently discolored. All repair and replacement work is to be done after working hours.

(c) SAMPLES:
The Lessor is to provide at least 5 samples of each type of wall covering to be installed for selection by the Contracting Officer.

(d) PAINTING:
(1) Prior to occupancy all surfaces designated by GSA for painting must be newly painted in colors acceptable to GSA. All painted surfaces, including any partitioning installed by the Government or the Lessor after Government occupancy, must be repainted after working hours at Lessor expense at least ever 5 years. This includes moving and return of furniture. Public areas must be painted at least every 3 years.

(2) Where feasible, reprocessed or consolidated latex paint with low VOC should be used in accordance with EPA's Comprehensive Procurement Guideline. The type of paint shall be acceptable to the Contracting Officer. Lessor shall follow manufacturer's recommendations for the application and maintenance of all paint products."

(e) REIMBURSEMENT:
The requirements of repainting under 5.3 are subject to the Government agreeing in writing in advance of repainting to reimbursing the actual cost of materials and labor therefor, plus interest fixed at 300 basis points over the 10 year U.S. Treasury Note rate quoted at the time of work commencement, amortized over 36 months and payable to Lessor in equal monthly payments of principal and interest in addition to and at the time the monthly rent is due. Notwithstanding the provisions of 5.3(d), the Government may elect to defer repainting beyond the time schedule stated therein.

Section 6.0 Mechanical, Electrical, Plumbing

13. The following paragraphs are added to **Section 6.0 Mechanical, Electrical, Plumbing entitled ENERGY COST SAVINGS (JUL 2000)** of the Solicitation for Offers:

"6.19 ENERGY COST SAVINGS (JUL 2000) [New paragraph]

(a) All offerors are encouraged to use Energy Savings Performance Contracts (ESPC) or utility agreements to achieve, maintain and/or exceed the ENERGY STAR Benchmark Score of 75, and are encouraged to include shared savings in their offer as a result of energy upgrades where applicable. The ENERGY STAR Online Benchmark Tool can be found at *www.epa.gov/energystar.*

(b) All new construction shall achieve an ENERGY STAR Building Label within one year after reaching 95 percent occupancy and continue to maintain the level of performance.

(c) Offerors may obtain a list of energy service companies qualified under the Energy Policy Act to perform ESPCs, as well as additional information on cost effective energy efficiency, renewables, and water conservation is available at *www.eren.doe.gov/femp* or by calling the FEMP Help Desk at 1-800-566-2877 for the ESPC qualified list."

14. **PARAGRAPH 6.2 entitled DRINKING FOUNTAIN, in Section 6.0 Mechanical, Electrical, Plumbing**, is deleted in its entirety from the Solicitation for Offers and replaced with the following:

"6.2 DRINKING FOUNTAINS (JUL 2000) [Modified paragraph]

(a) The Lessor shall provide, on each floor of office space, a minimum of one chilled drinking fountain within every 150 feet of travel distance.

(b) Solder and flux in joining potable water supply piping shall not contain more than 0.22 percent lead and domestic water pipe or pipe fittings shall not contain more than 8 percent lead. In addition, the Lessor is to meet standards set forth in EPA's "Lead in Drinking Water Standards for Schools, and Non-Residential Buildings," EPA Publication 812-B-94-002, April 1994."

15. **PARAGRAPH 6.3 entitled TOILET ROOMS, in Section 6.0 Mechanical, Electrical, Plumbing,** is deleted in its entirety from the Solicitation for Offers and replaced with the

following:

"6.3 TOILET ROOMS (JUL 2000) [Modified paragraph]

(a) Separate toilet facilities for men and women shall be provided on each floor occupied by the Government in the building. The facilities must be located so that employees will not be required to travel more than 200 feet on one floor to reach the toilets. Each toilet room shall have sufficient water closets enclosed with modern stall partitions and doors, urinals (in men's room) and hot (set in accordance with applicable building codes) and cold water. Water closets and urinals shall not be visible when the exterior door is open.

(b) Each main toilet room shall contain the following equipment:

(1) A mirror above the lavatory.

(2) A toilet paper dispenser in each water closet stall that will hold at least two rolls and allow easy, unrestricted dispensing.

(3) A coat hook on inside face of door to each water closet stall and on several wall locations by lavatories.

(4) At least one modern paper towel dispenser, soap dispenser and waste receptacle for every two lavatories.

(5) A coin operated sanitary napkin dispenser in women's toilet rooms with waste receptacle for each water closet stall.

(6) Ceramic tile, recycled glass tile or comparable wainscot from the floor to a minimum height of 4 feet 6 inches.

(7) A disposable toilet seat cover dispenser.

(8) A counter area of at least 2 feet in length, exclusive of the lavatories (however, it may be attached to the lavatories) with a mirror above and a ground fault interrupt type convenience outlet located adjacent to the counter area.

(c) If newly installed, toilet partitions shall be made from recovered materials as listed in EPA's Comprehensive Procurement Guidelines."

16. **Paragraph 6.6 entitled HEATING AND AIR CONDITIONING, in Section 6.0 Mechanical, Electrical, Plumbing**, is deleted in its entirety from the Solicitation for Offers and

replaced with the following:

"6.6 HEATING AND AIR CONDITIONING (JUNE 2000) [Modified paragraph]

(a) Temperatures shall conform to local commercial equivalent temperature levels and operating practices in order to maximize tenant satisfaction. These temperatures must be maintained throughout the leased premises and service areas, regardless of outside temperatures, during the hours of operation specified in the lease.

(b) During non-working hours, heating temperatures shall be set no higher than 55°F and air conditioning will not be provided except as necessary to return space temperatures to a suitable level for the beginning of working hours. Thermostats shall be secured from manual operation by key or locked cage. A key shall be provided to the GSA Field Office Manager.

(c) Simultaneous heating and cooling are not permitted.

(d) Areas having excessive heat gain or heat loss or affected by solar radiation at different times of the day shall be independently controlled.

(e) Zone Control. Individual thermostat control shall be provided for office space with control areas not to exceed 2000 BOMA Usable Square Feet. Areas which routinely have extended hours of operation shall be environmentally controlled through dedicated heating and air-conditioning equipment. Special purpose areas (such as photocopy centers, large conference rooms, computer rooms, etc.) with an internal cooling load in excess of 5 tons shall be independently controlled. Concealed package air-conditioning equipment shall be provided to meet localized spot cooling of tenant special equipment. Portable space heaters are prohibited from use.

(f) Equipment Performance. Temperature control for office spaces shall be assured by concealed central heating and air-conditioning equipment. The equipment shall maintain space temperature control over a range of internal load fluctuations of plus 0.5 Watt/sq.ft. to minus 1.5 Watts/sq.ft. from initial design requirements of the tenant.

(g) HVAC use During Construction. The permanent HVAC System may be used to move both supply and return air during the construction process only if the following conditions are met:

(1) A complete air filtration system with 60 percent efficiency filters is installed and properly maintained,
(2) No permanent diffusers are used,
(3) No plenum-type return air system is employed,

(4) The HVAC duct system is adequately sealed to prevent the spread of airborne particles and other contaminants,

(5) Following the building "flush-out," all duct systems are vacuumed with portable HEPA vacuums and documented clean in accordance with the National Air Duct Cleaners Association Specifications.

(h) Ductwork Re-use and Cleansing. Any ductwork to be reused and/or to remain in place shall be cleaned and tested and demonstrated to be clean in accordance with the standards set forth by the National Air Duct Cleaners Association. Cleaning is to occur immediately prior to Government occupancy to avoid contamination from construction dust and other airborne particles.

(i) Insulation. All insulation must contain recovered materials as required by EPA's Comprehensive Procurement Guidelines and related recycled content recommendations.

(j) The Lessor shall conduct HVAC system balancing after any HVAC system alterations during the term of the lease and make a reasonable attempt to schedule major construction outside of office hours.

17. **Paragraph 6.7 entitled VENTILATION, in Section 6.0 Mechanical, Electrical, Plumbing**, is deleted in its entirety from the Solicitation for Offers and replaced with the following:

"6.7 VENTILATION (JUL 2000) [Modified paragraph]

(a) During working hours in periods of heating and cooling, ventilation shall be provided in accordance with ASHRAE Standard 62, Ventilation for Acceptable Indoor Air Quality.

(b) Conference rooms of approximately 500 BOMA Usable Square Feet or greater shall be provided with a dedicated source of ventilation or be fitted with air handling equipment with smoke/odor removing filters.

(c) Air filtration shall be provided and maintained with filters having a minimum efficiency rating as determined by ASHRAE Standard 52. Pre-filters shall be 30 percent to 35 percent efficient. Final filters should be 80 percent to 85 percent efficient for particles at 3 microns.

(d) The Lessor shall conduct HVAC system balancing after HVAC system alterations and make a reasonable attempt to schedule major construction outside of office hours.

(e) Where the Lessor proposes that the Government should pay utilities:

(1) An automatic air or water economizer cycle must be provided to all air handling equipment.

(2) The building shall have a fully functional building automation system (BAS) capable of control, regulation and monitoring of all environmental conditioning equipment. The BAS shall be fully supported by a service and maintenance contract."

18. **Paragraph 6.16 entitled LIGHTING: INTERIOR, in Section 6.0 Mechanical, Electrical, Plumbing**, is deleted in its entirety from the Solicitation for Offers and replaced with the following:

"6.16 LIGHTING: INTERIOR AND PARKING (JUL 2000) [Modified paragraph]

(If high resolution exterior security cameras are necessary for a particular lease, insert higher foot-candle requirements after the second sentence of (b) in either optional paragraph. Do not use te higher requirements for all leases, because there will be an increase in cost without a corresponding increase in value.)

(a) Modern, diffused fluorescent fixtures using no more than 2.0 watts per ANSI/BOMA usable square foot shall be provided. Such fixtures shall be capable of producing a light level of 50 average maintained foot-candles at working surface height throughout the space. Tubes shall then be removed to provide 30 foot-candles in portions of work areas other than work surfaces and 1-10 foot-candles or minimum levels sufficient to ensure safety in non-working areas. Exceptions may be granted by the GSA's Buildings Manager. when the space is not in use by the Government, interior and exterior lighting, except that essential for safety and security purposes, shall be turned off.

(b) Exterior parking areas, vehicle driveways, pedestrian walkways and building perimeter shall have a minimum of 1 foot-candle of illumination and be designed based on Illumination Engineering Society standards. Exterior lighting and indoor parking shall be sufficient to accommodate security monitoring (i.e. closed circuit television camera). Indoor parking shall have a minimum of 10 foot-candles and be designed based on Illumination Engineering Society standards.

(c) The Lessor shall provide occupancy sensors and/or scheduling controls through building automation to reduce the hours the lights are on when the space is unoccupied. Daylight dimming controls shall be used in atriums or other space where daylight can contribute to energy savings.

(d) Lighting shall be controlled by occupancy sensors arranged to control open areas, individual offices, conference rooms, toilet rooms within the Government demised area

and all other programmed spaces or rooms within the lease space. The control system shall provide an optimal mix of infrared and ultrasonic sensors suitable for the configuration and type of space. Occupancy sensors shall be located so that they have a clear view of the room or area they are monitoring. No more than 1,000 BOMA Usable Square Feet of open space shall be controlled by occupancy sensor. All occupancy sensors shall have manual switches to override the light control. Such switches shall be located by door openings in accordance with the Americans With Disabilities Act Accessibility Guidelines and the Uniform Federal Accessibility Standards. If light switches are to be used instead of occupancy sensors or in combination with occupancy sensors, the Offeror must notify the Government during the negotiation process."

Section 7.0 Services, Utilities, Maintenance

19. **Paragraph 7.9 entitled JANITORIAL SERVICES, in Section 7.0 Services, Utilities, Maintenance**, is deleted in its entirety from the Solicitation for Offers and replaced with the following:

"**7.9 JANITORIAL SERVICES (JUL 2000)** **[Modified paragraph]**

The Lessor shall maintain outside areas of the leased premises in a clean condition and shall provide the necessary supplies and equipment to perform such work, except that the Lessor shall not be responsible for washing or cleaning windows. The following schedule describes the level of services intended. Performance will be based on the Contracting Officer's evaluation of results, not the frequency or method of performance.

(a) The Lessor shall maintain and clean the building's mechanical and electrical support spaces, outside public areas, entrance ways and all other outside common areas.

(b) Selection of Cleaning Products. The Lessor shall make careful selection of maintenance and cleaning products and equipment to:

(1) Use products that are packaged ecologically,
(2) Use products and equipment considered environmentally beneficial and/or recycled products that are phosphate free, non-corrosive, non-flammable and fully biodegradable and
(3) Minimize the use of harsh chemicals and the release of irritating fumes.

Examples of acceptable products may be found at *http://pub.fss.gsa.gov/environ/clean-prod-catalog.html.*

(c) Selection of Paper Products. The Lessor shall select paper and paper products

with recycled content conforming to the EPA's Comprehensive Procurement Guidelines.

AS REQUIRED

Properly maintain plants and lawns, remove snow and ice from entrances, exterior walks and parking lots of the building. Supply, install and replace all light bulbs, tubes, ballasts and starters as required. Replace floor coverings (this includes the moving and return of furniture) as specified in paragraph No. 5.10 entitled "Floor Covering and Perimeters." Clean ledges, courts, areaways and flat roofs.

20. The following new paragraphs are added to **Section 7.0 Services, Utilities, Maintenance entitled LANDSCAPING (JUL 2000)** of the Solicitation for Offers:

"7.12 LANDSCAPING (JUL 2000) [New paragraph]

(a) Where conditions permit, the site shall be landscaped for low maintenance and water conservation with plants that are either native or well-adapted to local growing conditions.

(b) Landscape management practices shall prevent pollution by:

(1) Employing practices which avoid or minimize the need for fertilizers and pesticides,
(2) Prohibiting the use of 2,4-D and organophosphates, and
(3) Composting/recycling all yard waste.

(c) Lessor shall use landscaping products with recycled content as required by EPA's Comprehensive Procurement Guidelines for landscaping products (www.epa.gov/cpg).

(d) The Contracting Officer shall approve the landscaping to be provided."

Section 8.0 Safety and Environment

21. **Paragraph 8.6 entitled INDOOR AIR QUALITY in Section 8.0 Safety and Environment Management**, is deleted in its entirety from the Solicitation for Offers and replaced with the following:

"8.6 INDOOR AIR QUALITY (JUL 2000) [Modified paragraph]

(a) The Lessor shall control contaminants at the source and/or operate the space in such a manner that the GSA indicator levels for carbon monoxide (CO), carbon dioxide

(CO2) and formaldehyde (HCHO) are not exceeded. The indicator levels for office areas shall be: CO - 9 parts per million (ppm) time0weighted average (TWA - 8-hour sample); CO2 - 1000 ppm (TWA); formaldehyde - 0.1 ppm (TWA).

(b) The Lessor shall make a reasonable attempt to apply insecticides, paints, glues, adhesives and heating, ventilating and air conditioning (HVAC) system cleaning compounds with highly volatile or irritating organic compounds outside of working hours. The Lessor shall provide at least 72 hours advance notice to the Government before applying noxious chemicals in occupied spaces and adequately ventilate those spaces during and after application.

(c) The Lessor shall promptly investigate indoor air quality (IAQ) complaints and shall implement the necessary controls to address the complaint.

(d) The Government reserves the right to conduct independent IAQ assessments and detailed studies in space it occupies, as well as in space serving the Government-leased space (e.g. common use areas, mechanical rooms, HFAC systems, etc.). The Lessor shall assist the Government in its assessments and detailed studies by making available information on building operations and Lessor activities, and providing access to space for assessment and testing, if required, and implement corrective measures required by the Contracting Officer.

(e) The Lessor shall provide to the Government Materials Safety Data Sheets (MSDS) upon request for the following products prior to their use during the term of the lease: adhesives, caulking, sealants, insulating materials, fireproofing or firestopping materials, paints, carpets, floor and wall patching or leveling materials, lubricants, clear finish for wood surfaces, janitorial cleaning products, pesticides, rodenticides and herbicides. The Government reserves the right to review such products used by the Lessor within the Government's leased space, common building areas and ventilation systems and zones serving the leased space, and the area above suspended ceilings and engineering space in the same ventilation zone as the leased space."

23. **Paragraph 8.8 entitled RADON IN WATER in Section 8.0 Safety and Environment Management**, is deleted in its entirety from the Solicitation for Offers and replaced with the following:

"8.8 RADON IN WATER (JUL 2000) **[Modified paragraph]**

(a) The Lessor shall demonstrate that water provided in leased space is in compliance with EPA requirements and shall submit certification to the Contracting Officer prior to the Government occupying the space.

(b) If the EPA action level is reached or exceeded, the Lessor shall institute appropriate abatement methods which reduce the radon levels to below this action level."

80093

Amendment No. 4, dated 12/05/00, to Solicitation for Offers, No. GS-05B-1620, consisting of one page

Government Satellite Dish Antenna

The Government reserves the right to install, operate and maintain a satellite dish antenna(s) on the roof of the demised premises. The Government and its contractor shall prepare the plans and specifications, and perform all work necessary for installation of the Government's satellite dish antenna. The Government and Lessor will mutually agree upon the antenna's location prior to the Government's commencement of work. The area and/or space for the antenna will be provided to the Government at no additional costs or annual rent to the Lessor.

The installation, operations and maintenance of the satellite dish antenna will be performed by a Government contractor who will supply the Lessor with certifications of insurance showing that the contractor is covered by Workmen's Compensation Insurance and insurance covering bodily injury and property damages. The Government and/or its contractor will be permitted access to attach all cabling from the demised premises to the antenna.

In the event re-roofing or maintenance becomes necessary, the Lessor will use reasonable efforts to perform re-roofing in such a manner that will not require relocation of the Government's antenna(s). However, if such work cannot be reasonably performed without relocation of the antenna, the Government will be responsible for all costs associated with such relocation.

The Government will be responsible for all damage caused by the installation, maintenance and/or use of the antenna and for any damage caused by the negligence of its employees in accord with the provisions of the Federal Tort Claims Act 28 U.S.C. 2671, *et seq.*

Upon expiration of the Government's lease, the Government will be responsible for removing the antenna(s) and for the repair of any damages caused by said removal.

The Government and Lessor will cooperate with each other to execute any necessary documents, to obtain any permits, approvals or zoning for installation of the Government's satellite dish antenna.

80094

INITIALS: _____ & _____
LESSOR GOVERNMENT

SOLICITATION FOR OFFERS

THE GENERAL SERVICES ADMINISTRATION

UNITED STATES DEPARTMENT OF JUSTICE
EXECUTIVE OFFICE FOR THE UNITED STATES ATTORNEY
35,000 - 40,000 RENTABLE SQUARE FEET

SPRINGFIELD, ILLINOIS

(b) (6) [redacted]

NAME: ANGELA Y. SANDERS

TITLE: CONTRACTING OFFICER

The information collection requirements contained in this Solicitation/Contract, that are not required by the regulation, have been approved by the Office of Management and Budget pursuant to the Paperwork Reduction Act and assigned the OMB Control No. 3090-0163.

INITIALS: _____ & _____
LESSOR GOVT

TABLE OF CONTENTS

1.0 SUMMARY 4
1.1. AMOUNT AND TYPE OF SPACE (JUN 1994) 4
1.2. AREA OF CONSIDERATION 4
1.3. LOCATION: CITY CENTER (JUN 1994) 4
1.4. LEASE TERM 4
1.5. OFFER DUE DATE 4
1.6. OCCUPANCY DATE 4
1.7. HOW TO OFFER (JUN 1994) 5
1.8. PLANS WITH OFFER (JUN 1994) 5
1.9. NEGOTIATIONS 5
1.10. PRICE EVALUATION (PRESENT VALUE) (JUN 1994) 5
1.11. AWARD 6
1.12. OCCUPATIONAL PROTECTION, HEALTH AND ENVIRONMENTAL SAFETY (OCT 1996) 6
1.13. HANDICAP ACCESSIBILITY FOR NEW CONSTRUCTION (JUL 1994) 7
1.14. SEISMIC SAFETY FOR NEW CONSTRUCTION (DEC 1993) 7
1.15. LABOR STANDARDS (AUG 1994) 7

2.0 AWARD FACTORS 8
2.1. AWARD FACTORS: GENERAL 8
2.2. HANDICAPPED AND SEISMIC SAFETY (JUL 1994) 8
2.3. AWARD BASED ON PRICE (JUN 1993) 9

3.0 MISCELLANEOUS 10
3.1. UNIT COSTS FOR ADJUSTMENTS 10
3.2. ALTERATIONS $25,000 OR LESS 10
3.3. ALTERNATE PROPOSALS 10
3.4. TAX ADJUSTMENT, GSAR 552.270-24 (AUG 1992) 11
3.5. PERCENTAGE OF OCCUPANCY 11
3.6. OPERATING COSTS, GSAR 552.270-23 (JUN 1985) 11
3.7. OPERATING COSTS BASE (JUN 1994) 11
3.8. RENTABLE SPACE (JUN 1994) 12
3.9. OCCUPIABLE SPACE (JUN 1994) 12
3.10. COMMON AREA FACTOR (JUN 1994) 12
3.11. APPURTENANT AREAS 12
3.12. ADJUSTMENT FOR VACANT PREMISES, GSAR 552.270-25 (JUN 1994) 12
3.13. EVIDENCE OF CAPABILITY TO PERFORM 12
3.14. CONSTRUCTION SCHEDULE 13
3.15. PROGRESS REPORTS 13
3.16. CONSTRUCTION INSPECTIONS 13
3.17. MISCELLANEOUS LABOR CLAUSES (AUG 1994) 13

4.0 GENERAL ARCHITECTURAL 18
4.1. QUALITY AND APPEARANCE OF BUILDING EXTERIOR 18
4.2. WORK PERFORMANCE 18
4.3. BUILDING SYSTEMS CERTIFICATION 18
4.4. SPACE EFFICIENCY 18
4.5. FLOOR PLANS AFTER OCCUPANCY 18
4.6. CAD FLOOR PLANS (SEP 1991) 18
4.7. FLOORS AND FLOOR LOAD (JUN 1994) 18
4.8. EXITS AND ACCESS (SEP 1991) 18
4.9. WINDOWS (SEP 1991) 18
4.10. HANDICAPPED ACCESSIBILITY (JUL 1994) 19
4.11. LANDSCAPING (OCT 1996) 23

5.0 ARCHITECTURAL FINISHES 24
5.1. LAYOUT AND FINISHES 24
5.2. CEILINGS AND INTERIOR FINISHES (SEP 1991) 24
5.3. WALL COVERINGS (SEP 1991) 24
5.4. DOORS: EXTERIOR (DEC 1992) 24
5.5. DOORS: INTERIOR (SEP 1991) 24
5.6. DOORS: HARDWARE (DEC 1992) 25
5.7. DOORS: IDENTIFICATION 25
5.8. PARTITIONS: PERMANENT (SEP 1991) 25
5.9. PARTITIONS: SUBDIVIDING (JUN 1994) 25
5.10. FLOOR COVERING AND PERIMETERS (DEC 1991) 25

5.11. CARPET TILE (SEP 1991) 26
5.12. RESILIENT FLOORING (SEP 1991) 26
5.13. ACOUSTICAL REQUIREMENTS 26
5.14. WINDOW COVERINGS (SEP 1991) 26
5.15. BUILDING DIRECTORY 27
5.16. FLAG POLE 27

6.0 MECHANICAL, ELECTRICAL, PLUMBING 28
6.1. MECHANICAL, ELECTRICAL, PLUMBING: GENERAL 28
6.2. DRINKING FOUNTAINS 28
6.3. TOILET ROOMS (JUL 1994) 28
6.4. TOILET ROOMS: FIXTURE SCHEDULE (OCT 1996) 28
6.5. JANITOR CLOSETS 29
6.6. HEATING AND AIR CONDITIONING (JUL 1994) 29
6.7. VENTILATION (OCT 1996) 30
6.8. VENTILATION: TOILET ROOMS (DEC 1993) 30
6.9. ELECTRICAL: GENERAL (SEP 1991) 30
6.10. ELECTRICAL: DISTRIBUTION (JUN 1994) 30
6.11. ELECTRICAL: DISTRIBUTION COMBINATION (JUN 1994) 30
6.12. ELECTRICAL: ADDITIONAL DISTRIBUTION SPECIFICATIONS 31
6.13. TELEPHONE: DISTRIBUTION AND EQUIPMENT (JUN 1994) 31
6.14. DATA DISTRIBUTION (JUN 1994) 31
6.15. ELECTRICAL, TELEPHONE, DATA FOR SYSTEMS FURNITURE (JUN 1994) 31
6.16. LIGHTING: INTERIOR. (JUN 1994) 31
6.17. SWITCHES (JUN 1994) 32
6.18. ELEVATORS (OCT 1996) 32

7.0 SERVICES, UTILITIES, MAINTENANCE 33
7.1. SERVICES, UTILITIES, MAINTENANCE: GENERAL 33
7.2. NORMAL HOURS 33
7.3. OVERTIME USAGE (JUN 1993) 33
7.4. UTILITIES 33
7.5. MAINTENANCE AND TESTING OF SYSTEMS (OCT 1996) 33
7.6. FLAG DISPLAY 33
7.7. SECURITY 33
7.8. SECURITY: ADDITIONAL REQUIREMENTS 33
7.9. JANITORIAL SERVICES 34
7.10. SCHEDULE OF PERIODIC SERVICES 35
7.11. LANDSCAPE MAINTENANCE 35

8.0 SAFETY AND ENVIRONMENTAL MANAGEMENT 36
8.1. OCCUPANCY PERMIT (OCT 1996) 36
8.2. FIRE AND LIFE SAFETY (OCT 1996) 36
8.3. MANUAL FIRE ALARM SYSTEMS (OCT 1996) 36
8.4. OSHA REQUIREMENTS (OCT 1996) 36
8.5. ASBESTOS (OCT 1996) 36
8.6. INDOOR AIR QUALITY (OCT 1996) 36
8.7. RADON IN AIR (OCT 1996) 36
8.8. RADON IN WATER (SEP 1991) 37
8.9. HAZARDOUS MATERIALS (OCT 1996) 37
8.10. RECYCLING (OCT 1996) 37

9.0 SPECIAL REQUIREMENTS 38

1.0 SUMMARY

1.1. AMOUNT AND TYPE OF SPACE (JUN 1994)

(a) ~~The General Services Administration (GSA) is interested in leasing approximately 40,000 square feet of rentable space. The rentable space must yield a minimum of 35,000 occupiable square feet to a maximum of 38,000 occupiable square feet, available for use by Tenant for personnel, furnishings, and equipment.~~

(b) Offers must be for space located in a quality building of sound and substantial construction as described in this solicitation for offers, have a potential for efficient layout. For purposes of this solicitation, the definition of occupiable square feet is in the paragraph entitled "Occupiable Space" in the Miscellaneous section of this solicitation.

(c) ~~To demonstrate potential for efficient layout, offerors may be requested to provide test fit layouts when the space offered contains certain features like:~~

- ~~narrow column spacing~~
- ~~atriums, light wells or other areas interrupting contiguous spaces~~
- ~~extremely long, narrow runs of space~~
- ~~irregular space configurations, or~~
- ~~other unusual building features.~~

~~The Government will advise the offeror if the test fit layout demonstrates that the Government's requirement cannot be accommodated within the space offered. The offeror will have the option of increasing the occupiable space offered provided that it does not exceed the maximum occupiable square footage in the solicitation. If the offeror is already providing the maximum occupiable square footage and cannot house the Government's space requirements, then the Government will advise the offeror that his offer is unacceptable.~~

(d) Unless otherwise noted, all references in this solicitation to square feet shall mean occupiable square feet.

1.2. AREA OF CONSIDERATION

The space offered must be within 4 (four) city blocks of the Paul J. Findley Federal Building in Springfield, Illinois.

1.3. LOCATION: CITY CENTER (JUN 1994)

(a) NEIGHBORHOOD:
Space must be located in a prime commercial office district with attractive, prestigious, professional surroundings with a prevalence of modern design and/or tasteful rehabilitation in modern use. Streets and public sidewalks should be well maintained.

(b) PARKING AND TRANSPORTATION:
The parking to square foot ratio available on-site must at least meet current local code requirements or in the absence of a local code requirement, on-site parking must be available at a ratio of 1 space for every 1,000 rentable square feet of Government leased space.

(c) LOCATION AMENITIES:
A variety of inexpensive and moderately priced fast food and/or eat-in restaurants must be located within 2 city blocks and other employee services such as retail shops, cleaners, banks, etc., should be located within 3 city blocks.

1.4. LEASE TERM

~~The lease term will be for 15 (fifteen) years, 10 (ten) years firm.~~

1.5. OFFER DUE DATE

~~Offers are due by March 1, 1999, and must remain open until November 1, 1999.~~

1.6. OCCUPANCY DATE

~~Occupancy is desired within one year after award, or no later than October 1, 2000.~~

INITIALS: _____ & _____
LESSOR GOVT

1.7. HOW TO OFFER (JUN 1994)

(a) ~~Offers are to be submitted to the Contracting Officer at:~~
~~General Services Administration, Great Lakes Region~~
~~Property Acquisition and Realty Services - 5PES-I~~
~~Chicago, Illinois 60604~~
~~Attn: Angela Sanders~~

(b) ~~No later than the close of business on the offer due date the following documents, properly executed, must be submitted~~:

(1) ~~GSA Form 1364, Proposal to Lease Space (enclosed) or similar form.~~

(2) ~~GSA Form 1217, Lessor's Annual Cost Statement (enclosed).~~

(3) ~~GSA Form 3518, Representations and Certifications (enclosed).~~

(4) ~~One-eighth inch (preferred) or larger scale first generation blue line plans of the space offered.~~

(i) ~~Photostatic copies are not acceptable. All architectural features of the space must be accurately shown. If conversion or renovation of the building is planned, alterations to meet this solicitation must be indicated. If requested, more informative plans must be provided within 10 days.~~

(ii) ~~Plans shall reflect corridors in place or the proposed corridor pattern for both a typical full (single tenant) floor and/or partial (multi-tenant) floor. The corridors in place or proposed corridors should meet local code requirements for issuance of occupancy permits.~~

(iii) ~~GSA will review the corridors in place and/or proposed corridor pattern to make sure that these achieve an acceptable level of safety as well as to ensure that these corridors provide public access to all essential building elements. The offeror will be advised of any adjustments that are required to the corridors for the purpose of determining the occupiable space. The required corridors may or may not be defined by ceiling high partitions. Actual corridors in the approved layout for the successful offeror's space may differ from the corridors used in determining the occupiable square footage for the lease award.~~

(5) ~~A list of unit costs for adjustments (see paragraph entitled "Alterations Costing $25,000 or Less").~~

(6) ~~An hourly overtime rate for overtime use of heating and cooling (see paragraph entitled "Overtime Usage").~~

(c) ~~The Offeror should also include as part of the offer, information which addresses any award factors which are listed in the solicitation paragraph entitled "Other Factors."~~

(d) ~~See GSA Form 3516, Solicitation Provisions, for additional instructions. If additional information is needed, the Contracting Officer should be contacted.~~

(e) ~~There will be no public opening of offers and all offers will be confidential until the lease has been awarded; however, the Government may release proposals outside the Government to a Government support contractor to assist in the evaluation of offers. Such Government contractors shall be required to protect the data from unauthorized disclosure. Offerors who desire to maximize protection of information in their offers may apply the restriction notice to their offers as prescribed in the provision entitled "52.215-12, Restriction on Disclosure and Use of Data" (see GSA Form 3516).~~

1.8. PLANS WITH OFFER (JUN 1994)

All plans submitted for consideration must have been generated by a Computer-Aided Design (CAD) program which is compatible with AutoCAD Release 12. The preferred file extension is .DWG, but .DWG or >IGES file extensions are acceptable. All clean and purged files are to be submitted on 3-½ inch or 5-¼ inch high density diskettes. All disks must be accompanied with a written matrix indicating the layering standard used to ensure all information is recoverable. Plans shall include a proposed corridor pattern for typical floors and/or partial floors. All architectural features of the space must be accurately shown.

1.9. NEGOTIATIONS

~~Negotiations will be conducted on behalf of the Government by the GSA Contracting Officer or other authorized representative. The GSA Contracting Officer is named on the cover of this solicitation. GSA will negotiate rental price for the initial term, any renewal periods, and any other aspect of the offer as deemed necessary.~~

1.10. PRICE EVALUATION (PRESENT VALUE) (JUN 1994)

(a) ~~If annual CPI adjustments in operating expenses are included, Offerors are required to submit their offers with the total "gross" annual price per rentable square foot and a breakout of the "base" price per rentable square foot for services and utilities (operating expenses) to be provided by the Lessor. The "gross" price shall include the "base" price.~~

INITIALS: _____ & _____
LESSOR GOVT

(b) ~~Offerors are required to submit plans and any other information to demonstrate that the rentable space yields occupiable space within the required occupiable range. The Government will verify the amount of occupiable square footage and convert the rentable prices offered to occupiable prices, which will subsequently be used in the price evaluation.~~

(c) ~~If the offer includes annual adjustments in operating expenses, the base price per occupiable square foot from which adjustments are made will be the base price for the term of the lease, including any option periods.~~

(d) ~~Evaluation of offers will be on the basis of the annual price per occupiable square foot, including any option periods. The Government will perform present value price evaluation by reducing the prices per occupiable square foot to a composite annual occupiable square foot price, as follows:~~

(1) ~~Parking and wareyard areas will be excluded from the total square footage, but not from the price. For different types of space, the gross annual per square foot price will be determined by dividing the total annual rental by the total square footage minus these areas.~~

(2) ~~If annual adjustments in operating expenses will not be made, the gross annual per square foot price will be discounted annually at 8 percent to yield a gross present value cost (PVC) per square foot.~~

(3) ~~If annual adjustments in operating expenses will be made, the annual per square foot price, minus the base cost of operating expenses, will be discounted annually at 8 percent to yield a net PVC per square foot. The operating expenses will be both escalated at 4 percent compounded annually and discounted annually at 8 percent, then added to the net PVC to yield the gross PVC.~~

(4) ~~To the gross PVC will be added:~~

- ~~The cost of Government provided services not included in the rental escalated at 4 percent compounded annually and discounted annually at 8 percent.~~

- ~~The annualized (over the full term) per occupiable square foot cost of any items which are to be reimbursed in a lump sum payment. (The cost of these items is present value; therefore, it will not be discounted.)~~

(5) ~~The sum of either (2) and (4) or (3) and (4), above, will be the per occupiable square foot present value of the offer for price evaluation purposes.~~

1.11. AWARD

~~After conclusion of negotiations, the Contracting Officer will require the Offeror selected for award to execute the proposed lease prepared by GSA which reflects the proposed agreement of the parties.~~

~~The proposed lease shall consist of:~~

~~(a) Standard Form 2, U.S. Government Lease for Real Property,~~

(b) ~~GSA Form 3517, General Clauses,~~

(c) ~~GSA Form 3518, Representations and Certifications,~~

(d) ~~The pertinent provisions of the offer, and~~

(e) ~~The pertinent provisions of the SFO.~~

~~The acceptance of the offer and award of the lease by the Government occurs upon notification of unconditional acceptance of the offer or execution of the lease by the GSA Contracting Officer and mailing or otherwise furnishing written notification or the executed lease to the successful Offeror.~~

1.12. OCCUPATIONAL PROTECTION, HEALTH AND ENVIRONMENTAL SAFETY (OCT 1996)

The leased space shall not expose the occupant to undue safety and environmental risks.

1.13. HANDICAP ACCESSIBILITY FOR NEW CONSTRUCTION (JUL 1994)

To be considered for award, buildings to be constructed must fully meet the new construction requirements of the Uniform Federal Accessibility Standards (UFAS) (Federal Register vol. 49, No. 153, August 7, 1984, reissued as FED. STD. 795, dated April 1, 1988, and amended by Federal Property Management Regulations Amendment D-88, 54 FR 12627, March 28, 1989). Copies of UFAS and the amendment are available from the Contracting Officer upon request.

1.14. SEISMIC SAFETY FOR NEW CONSTRUCTION (DEC 1993)

(a) If an Offeror proposes to satisfy the requirements of this solicitation through the construction of a new building or the construction of an addition to an existing building, then such new building or addition shall fully meet seismic safety standards, as described below.

(b) For those buildings or additions to buildings described in "a" above, the Offeror shall provide a written certification from a licensed structural engineer that the building(s) conforms to the seismic standards for new construction of the current (as of the date of this solicitation) edition of either the ICBO Uniform Building Code or the BOCA National Building Code.

(c) All design and engineering documents, including structural engineering calculations, must be made available for review by the Government during design development to ensure compliance with seismic safety standards.

1.15. LABOR STANDARDS (AUG 1994)

If an offeror proposes to satisfy the requirements of this Solicitation for Offers through the construction of a new building or the complete rehabilitation or reconstruction of an existing building, and where the Government will be the sole or predominant tenant such that any other use of the building will be functionally or quantitatively incidental to the Government's use and occupancy, the following Federal Acquisition Regulation clauses shall apply to work performed in preparation for occupancy and use of the building by the United States:

52.222-4 Contract Work Hours and Safety Standards Act - Overtime Compensation

52.222-6 Davis-Bacon Act

52.222-7 Withholding of Funds

52.222-8 Payrolls and Basic Records

52.222-9 Apprentices and Trainees

52.222-10 Compliance with Copeland Act Requirements

52.222-11 Subcontracts (Labor Standards)

52.222-12 Contract Termination-Debarment

52.222-13 Compliance with Davis-Bacon and Related Act Regulations

52.222-14 Disputes Concerning Labor Standards

52.222-15 Certification of Eligibility

2.0 AWARD FACTORS

2.1. AWARD FACTORS: GENERAL

The Contracting Officer will conduct oral or written negotiations with all Offerors that are within the competitive range. The competitive range will be established by the Contracting Officer on the basis of cost or price and other factors (if any) that are stated in this solicitation and will include all offers that have a reasonable chance of being selected for award. The Offerors will be provided a reasonable opportunity to submit any cost or price, technical, or other revisions to their offers that may result from the negotiations. Negotiations will be closed with submission of "Best and Final" offers.

2.2. HANDICAPPED AND SEISMIC SAFETY (JUL 1994)

All offerors received in response to the request for "Best and Final" offers will be initially evaluated to determine whether the offers fully meet the seismic safety requirements of the Uniform Building Code (UBC) and the handicapped accessibility requirements for new construction of the Uniform Federal Accessibility Standards (UFAS) (Federal Register vol. 49, No. 153, August 7, 1984, reissued as FED. STD. 795, dated April 1, 1988, and amended by Federal Property Management Regulations Amendment D-88, 54 FR 12627, March 28, 1989). All technical requirements for handicapped accessibility in this solicitation are the same as those in Section 4.1.2 Accessible Buildings, New Construction, of UFAS. When clarification is required, UFAS shall be consulted. If any offers are received which fully meet handicapped requirements of new construction, then other offers which do not fully meet these requirements will not be considered.

FULL COMPLIANCE:
"Fully meets" as used herein with respect to the handicapped requirements means the offer fully complies with the requirements stated in the following subparagraphs of "Handicapped Accessibility":

Parking and Loading Zones, Route, Entrance and Egress, Ramps, Stairs, Handrails, Doors, Elevators, Telephones, Controls, Signage, Alarms, Drinking Fountains, Storage Facilities, Seating and Work Stations, Assembly Areas, and Toilet Rooms.

"Fully meets" with regard to seismic safety means the offer contains a certification by a registered structural engineer that the building conforms to seismic requirements for new construction of the current (as of the date of this solicitation) edition of the UBC or the 1970 edition if the lateral load resisting system is of steel construction or the 1976 edition if the lateral load resisting system is of concrete or masonry construction.

SUBSTANTIAL COMPLIANCE:
In accordance with UFAS, if no offer is received which fully meets handicapped accessibility requirements for new construction, but an offer(s) is received which substantially meets these requirements, then other offers which do not substantially meet these requirements will not be considered. "Substantially meets" as used herein with respect to the handicapped requirements means the offer fully complies with the requirements stated in the following subparagraphs of "Handicapped Accessibility":

Parking and Loading Zones, Route, Ramps, Entrance and Egress, Stairs, Doors, Drinking Fountains, Toilet Rooms and at least one elevator where necessary for route.

"Substantially meets" with regard to seismic safety means the Offeror has provided an analysis by a registered structural engineer that specifically describes all exceptions to full UBC compliance and a statement that the building has adequate strength to resist the maximum credible earthquake without collapse. Structural calculations may be required.

LESS THAN SUBSTANTIAL COMPLIANCE:
In accordance with UFAS, if no offer is received which either fully or substantially meets the handicapped accessibility requirements of new construction, consideration will be given only to offers which meet the following minimum requirements:

(a) At least one accessible route shall be provided from an accessible entrance to the leased space and all required accessible areas. At least one elevator shall be provided where necessary for accessible route. Other handicapped paragraphs shall apply as necessary, including but not limited to Controls and Signage.

(b) If parking is provided, then accessible spaces shall be provided in conformance with the table in the handicapped "Parking and Loading Zones" specifications.

(c) Accessible toilet rooms shall be provided as follows:

(1) Where more than one toilet room for each sex is provided on a floor on which the Government leases space, at least one toilet room for each sex on that floor shall be accessible.

(2) Where only one toilet room for each sex is provided on a floor on which the Government leases space, either one unisex toilet room or one toilet room for each sex on that floor shall be accessible.

(3) Where only one toilet room is provided in a building where the Government leases space, one unisex toilet room shall be accessible.

(4) In a qualified historic building where the Advisory Council on Historic Preservation determines that providing the above minimum accessible toilet facilities would threaten or destroy the historic integrity of the space, at least one unisex toilet room in the building shall be accessible.

If no offer is received which meets the minimum requirements described above, offers will not be considered unless a waiver of handicapped requirements is requested by the Contracting Officer and granted by the GSA Administrator.

If no offer meets the modified seismic safety requirements described above, the Contracting Officer will make an award consistent with the other requirements of the solicitation.

2.3. AWARD BASED ON PRICE (JUN 1993)

After review of "Best and Final" offers is complete, the lease will be awarded to the responsible Offeror whose offer conforms to the requirements of this solicitation and is the lowest priced offer submitted (see the SFO paragraph entitled "Price Evaluation (Present Value)").

3.0 MISCELLANEOUS

3.1. UNIT COSTS FOR ADJUSTMENTS

~~Several paragraphs in this SFO specify means for determining quantities of materials. These are Government projections to assist the Offeror in cost estimating. Actual quantities may not be determined until after the lease is awarded and the space layout completed. To enable an equitable settlement if the Government layout departs from the projection, the Offeror must list a unit cost for each of these materials. GSA will use each unit cost to make a lump sum payment or rental increase if the amount of material required by the layout is more than specified or take credit from rental if the amount is less than specified. Offerors are required to state in the offer or in an attachment:~~

- The cost per linear foot of office subdividing ceiling-high partitioning.
- The cost per floor mounted duplex electrical outlet.
- The cost per wall mounted duplex electrical outlet.
- The cost per floor mounted fourplex (double duplex) electrical outlet.
- The cost per wall mounted fourplex (double duplex) electrical outlet.
- The cost per dedicated clean electrical computer receptacle.
- The cost per floor mounted telephone outlet.
- The cost per wall mounted telephone outlet.
- The cost per interior door.
- The cost per linear foot of slab to slab office partitioning with a Sound Transmission Class of 45.
- The cost per square foot of security mesh.
- The cost per wall mounted duplex 110V,20A electrical outlet.

3.2. ALTERATIONS $25,000 OR LESS

(a) The unit prices which the Offeror is required to list will be used, upon acceptance by GSA, during the first year of the lease to price alterations costing $25,000 or less. These prices may be indexed or renegotiated to apply to subsequent years of the lease upon mutual agreement of the Lessor and Government.

(b) Where unit prices for alterations are not available, the Lessor may be requested to provide a price proposal for the alterations. Orders will be placed by issuance of a GSA Form 276, Supplemental Lease Agreement, a GSA Form 300, Order for Supplies or Services, or a tenant agency approved form. The clauses entitled "GSAR 552.232-71 Prompt Payment (APR 1989)" and "GSAR 552.232-72 Invoice Requirements (Variation) (APR 1989)" apply to orders for alterations (see GSA Form 3517). All orders are subject to the terms and conditions of this lease.

(c) Orders may be placed by the Contracting Officer, the GSA buildings manager or tenant agency officials when specifically authorized to do so by the Contracting Officer. The Contracting Officer will provide the Lessor with a list of agency officials authorized to place orders and will specify any limitations on the authority delegated to tenant agency officials. The tenant agency officials are not authorized to deal with the Lessor on any other matters.

(d) Payments for alterations ordered by tenant agencies will be made directly by the agency placing the order.

3.3. ALTERNATE PROPOSALS

This solicitation may specify certain items for which alternate proposals are required. For evaluation and negotiation, the offer shall state:

- Itemized costs for lump sum payment not to be included in the rental rate, and
- A rental rate which includes the costs of these items.

The Offeror must provide costs for both methods of evaluation on the lease proposal form in order to be considered for award. GSA may elect the option it deems most favorable.

3.4. TAX ADJUSTMENT, GSAR 552.270-24 (AUG 1992)

(a) The Government shall make a lump sum payment to cover its share of real estate taxes over taxes for the calendar year in which its lease commences (base year). The amount of payment shall be based upon the submission of proper invoice, including paid tax receipts/statements/bills, from the Lessor to the Contracting Officer. The due date for making payment shall be the 30th day after receipt of the invoice by the Contracting Officer or the 30th day after the anniversary date of the lease, whichever is later. If the invoice submitted does not meet the requirements of a proper invoice, it will be returned to the Lessor within 7 days of receipt. The Government will be responsible for payment only if the receipts are submitted within 60 calendar days of the date the payment is due. If no full tax assessment is made during the calendar year in which the Government lease commences, the base year will be the first year of a full assessment.

(b) The Government's share of the tax increase will be based on the ratio of the rentable square feet occupied by the Government to the total rentable square feet in the building. If the Government's lease terminates before the end of a calendar year, payment will be based on the percentage of the year in which the Government occupied space. The payment will not include penalties for non-payment or delay in payment. If there is any variance between the assessed value of the Government's space other space in the building, the Government may adjust the basis for determining its share of the tax increase.

(c) The Government may contest the tax assessment by initiating legal proceedings on behalf of the Government and the Lessor or the Government alone. If the Government is precluded from taking legal action, the Lessor shall contest the assessment upon reasonable notice by the Government. The Government shall reimburse the Lessor for all costs and shall execute all documents required for the legal proceedings. The Lessor shall agree with the accuracy of the documents. The Government shall receive its share of any tax refund. If the Government elects to contest the tax assessment, payment under paragraph (a) of this clause shall become due on the first workday of the second month following conclusion of the appeal proceedings.

(d) In the event of any decreases in real estate taxes occurring during the term of occupancy under the lease to a rate below the base year, payment for taxes will be reduced accordingly. The amount of any such reductions will be determined in the same manner as increases provided under paragraph (a) of this clause.

3.5. PERCENTAGE OF OCCUPANCY

~~The percent of the building occupied by the Government, for purposes of tax adjustments, will be established during negotiations.~~

3.6. OPERATING COSTS, GSAR 552.270-23 (JUN 1985)

(a) ~~Beginning with the second year of the lease and each year after, the Government shall pay adjusted rent for changes in costs for cleaning services, supplies, materials, maintenance, trash removal, landscaping, water, sewer charges, heating, electricity, and certain administrative expenses attributable to occupancy. Applicable costs listed on GSA Form 1217, Lessor's Annual Cost Statement, when negotiated and agreed upon, will be used to determine the base rate for operating costs adjustment.~~

(b) The amount of adjustment will be determined by multiplying the base rate by the percent of change in the Cost of Living Index. The percent change will be computed by comparing the index figure published for the month prior to the lease commencement date with the index figure published for the month which begins each successive 12-month period. For example, a lease which commences in June of 1985 would use the index published for May of 1985 and that figure would be compared with the index published for May of 1986, May of 1987, and so on, to determine the percent change. The Cost of Living Index will be measured by the U.S. Department of Labor revised Consumer Price Index for wage earners and clerical workers, U.S. City average, all items figure, (1982-84 = 100) published by the Bureau of Labor Statistics. Payment will be made with the monthly installment of fixed rent. Rental adjustments will be effective on the anniversary date of the lease. Payment of the adjusted rental rate will become due on the first workday of the second month following the publication of the Cost of Living Index for the month prior to the lease commencement date.

(c) If the Government exercises an option to extend the lease term at the same rate as that of the original term, the option price will be based on the adjustment during the original term. Annual adjustments will continue.

(d) ~~In the event of any decreases in the Cost of Living Index occurring during the term of the occupancy under the lease, the rental amount will be reduced accordingly. The amount of such reductions will be determined in the same manner as increases in rent provided under this clause.~~

(e) The offer must clearly state whether the rental is firm throughout the term of the lease or if it is subject to annual adjustment of operating costs as indicated above. If operating costs will be subject to adjustment, it should be specified on the GSA Form 1364, Proposal to Lease Space, contained elsewhere in this solicitation.

3.7. OPERATING COSTS BASE (JUN 1994)

The base for the operating costs adjustment will be established during negotiations based upon occupiable square feet.

3.8. RENTABLE SPACE (JUN 1994)

Rentable space is the area for which a tenant is charged rent. It is determined by the building owner and may vary by city or by building within the same city. The rentable space may include a share of building support/common areas such as elevator lobbies, building corridors, and floor service areas. Floor service areas typically include restrooms, janitor rooms, telephone closets, electrical closets, and mechanical rooms. The rentable space generally does not include vertical building penetrations and their enclosing walls, such as stairs, elevator shafts and vertical ducts.

3.9. OCCUPIABLE SPACE (JUN 1994)

(a) Occupiable Space is that portion of rentable space that is available for a tenant's personnel, equipment, and furnishings and is the method of measurement for the area for which the Government will evaluate offers.

(b) Occupiable Space is determined as follows:

(1) If the space is on a single tenancy floor, compute the inside gross area by measuring between the inside finish of the permanent exterior building walls or from the face of the convectors (pipes or other wall-hung fixtures) if the convector occupies at least 50 percent of the length of exterior walls.

(2) If the space is on a multiple tenancy floor, measure from the exterior building walls as above and to the room side finish of the fixed corridor and shaft walls and/or the center of tenant-separating partitions.

(3) In all measurements, make no deductions for columns and projections enclosing the structural elements of the building and deduct the following from the gross area including their enclosing walls:

(i) toilets and lounges,
(ii) stairwells,
(iii) elevators and escalator shafts,
(iv) building equipment and service areas,
(v) entrance and elevator lobbies,
(vi) stacks and shafts, and
(vii) corridors in place or required by local codes and ordinances and/or required by GSA to provide an acceptable level of safety and/or to provide access to all essential building elements. (Corridors deducted to determine occupiable space may or may not be separated by ceiling high partitions).

(c) Unless otherwise noted, all references in this solicitation to square feet shall mean occupiable square feet.

3.10. COMMON AREA FACTOR (JUN 1994)

The Common Area Factor is a conversion factor(s) determined by the building owner and often applied by the owner to the usable area to determine the rentable square feet for the building.

3.11. APPURTENANT AREAS

~~The right to use appurtenant areas and facilities is included. The Government reserves the right to post Government rules and regulations where the Government leases space.~~

3.12. ADJUSTMENT FOR VACANT PREMISES, GSAR 552.270-25 (JUN 1994)

(a) ~~If the Government fails to occupy any portion of the leased premises or vacates the premises in whole or in part prior to expiration of the firm term of the lease, the rental rate will be reduced.~~

(b) The rate will be reduced by that portion of the costs per occupiable square foot of operating expenses not required to maintain the space. Said reduction must occur after the Government gives 30 calendar days prior notice to the Lessor, and must continue in effect until the Government occupies the premises or the lease expires or is terminated.

3.13. EVIDENCE OF CAPABILITY TO PERFORM

(a) AT THE TIME OF SUBMISSION OF OFFERS, OFFERORS SHALL SUBMIT TO THE CONTRACTING OFFICER:

(1) Satisfactory evidence of at least a conditional commitment of funds in an amount necessary to prepare the space. Such commitments must be signed by an authorized bank officer and at a minimum must state: amount of loan; term in years; annual percentage rate; length of loan commitment.

(2) The name of the proposed construction contractor, as well as evidence of his experience, competency, and performance capabilities with construction similar in scope to that which is required herein.

(3) The license or certification of the individual(s) and/or firm(s), providing architectural and engineering design services, to practice in the state where the facility is located.

(4) Compliance with local zoning laws or evidence of variances, if any, approved by the proper local authority.

(5) Evidence of ownership or control of site.

(b) AFTER AWARD:
Within 30 days after award, the successful Offeror/Lessor shall provide to the Contracting Officer evidence of:

(1) A firm commitment of funds in an amount sufficient to perform the work.

(2) Award of a construction contract with a firm completion date.

(3) Issuance of a building permit covering construction of the improvements.

3.14. CONSTRUCTION SCHEDULE

(a) Within 14 days after award of the lease contract, the successful Offeror shall submit to the Contracting Officer a tentative construction schedule giving the dates on which the various phases of construction will be completed to coincide with the Government's required occupancy date (see paragraph entitled "Occupancy Date"). The finalized schedule is to be submitted no later than 60 days after award.

(b) The schedule is to include timing for completion of design and construction milestones, including but not limited to, (1) submittal of preliminary plans and specifications, (2) submittal of other working drawings, (3) issuance of a building permit, (4) completed construction documents, (5) start of construction, (6) completion of principal categories of work, (7) phased completion, and availability for occupancy of each portion of the Government space (by floor, block, or other appropriate category), and (8) final construction completion.

3.15. PROGRESS REPORTS

After start of construction, the successful Offeror shall submit to the Contracting Officer, written progress reports at intervals of 30 days. The report shall include information as to percentage of the work completed by phase and trade, a statement as to expected completion and occupancy date, changes introduced into the work, and general remarks on such items as material shortages, strikes, weather, etc.

3.16. CONSTRUCTION INSPECTIONS

(a) Construction inspections will be made periodically by the Contracting Officer and/or designated technical representatives to review compliance with the solicitation requirements and the final working drawings.

(b) Periodic reviews, tests, and inspections by the Government are not to be interpreted as resulting in any approval of the Lessor's apparent progress toward meeting the Government's objectives, but are intended to discover any information which the Contracting Officer may be able to call to the Lessor's attention to prevent costly misdirection of effort. The Lessor will remain completely responsible for designing, constructing, operating, and maintaining the building in full accordance with the requirements of this solicitation.

3.17. MISCELLANEOUS LABOR CLAUSES (AUG 1994)

1. 52.222-4 CONTRACT WORK HOURS AND SAFETY STANDARDS ACT—OVERTIME COMPENSATION (MAR 1986)

(a) *Overtime requirements.* No Contractor or subcontractor contracting for any part of the contract work which may require or involve the employment of laborers or mechanics (see Federal Acquisition Regulation (FAR) 22.300) shall require or permit any such laborers or mechanics in any workweek in which the individual is employed on such work to work in excess of 40 hours in such workweek unless such laborer or mechanic receives compensation at a rate not less than 1 ½ times the basic rate of pay for all hours worked in excess of 40 hours in such workweek.

(b) *Violation; liability for unpaid wages; liquidated damages.* In the event of any violation of the provisions set forth in paragraph (a) of this clause, the Contractor and any subcontractor responsible therefor shall be liable for the unpaid wages. In addition, such Contractor and subcontractor shall be liable to the United States (in the case of work done under contract for the District of Columbia or a territory, to such District or to such territory), for liquidated damages. Such liquidated damages shall be computed with respect to each individual laborer or mechanic employed in violation of the provisions set forth in paragraph (a) of this clause in the sum of $10 for each calendar day on which such individual was required or permitted to work in excess of the standard workweek of 40 hours without payment of the overtime wages required by provisions set forth in paragraph (a) of this clause.

(c) *Withholding for unpaid wages and liquidated damages.* The Contracting Officer shall upon his or her own action or upon written request of an authorized representative of the Department of Labor withhold or cause to be withheld, from any moneys payable on account of work performed by the Contractor or subcontractor under any such contract or any other Federal contract with the same Prime Contractor, or any other Federally-assisted contract subject to the Contract Work Hours and Safety Standards Act which is held by the same Prime Contractor, such sums as may be determined to be necessary to satisfy any liabilities of such Contractor or subcontractor for unpaid wages and liquidated damages as provided in the provisions set forth in paragraph (b) of this clause.

(d) *Payrolls and basic records.*

(1) The Contractor or subcontractor shall maintain payrolls and basic payroll records during the course of contract work and shall preserve them for a period of 3 years from the completion of the contract for all laborers and mechanics working on the contract. Such records shall contain the name and address of each such employee, social security number, correct classifications, hourly rates of wages paid, daily and weekly number of hours worked, deductions made, and actual wages paid. Nothing in this paragraph shall require the duplication of records required to be maintained for construction work by Department of Labor regulations at 29 CFR 5.5(a)(3) implementing the Davis-Bacon Act.

(2) The records to be maintained under paragraph (d)(1) of this clause shall be made available by the Contractor or subcontractor for inspection, copying, or transcription by authorized representatives of the Contracting Officer or the Department of Labor. The Contractor or subcontractor shall permit such representatives to interview employees during working hours on the job.

(e) *Subcontracts.* The Contractor or subcontractor shall insert in any subcontracts the provisions set forth in paragraphs (a) through (e) of this clause and also a clause requiring the subcontractors to include these provisions in any lower tier subcontracts. The Prime Contractor shall be responsible for compliance by any subcontractor or lower tier subcontractor with the provisions set forth in paragraphs (a) through (e) of this clause.

2. 52.222-6 DAVIS-BACON ACT (NOV 1992)

(a) All laborers and mechanics employed or working upon the site of the work will be paid unconditionally and not less often than once a week, and without subsequent deduction or rebate on any account (except such payroll deductions as are permitted by regulations issued by the Secretary of Labor under the Copeland Act (29 CFR Part 3)), the full amount of wages and bona fide fringe benefits (or cash equivalents thereof) due at time of payment computed at rates not less than those contained in the wage determination of the Secretary of Labor which is attached hereto and made a part hereof, regardless of any contractual relationship which may be alleged to exist between the Contractor and such laborers and mechanics. Contributions made or costs reasonably anticipated for bona fide fringe benefits under section 1(b)(2) of the Davis-Bacon Act on behalf of laborers or mechanics are considered wages paid to such laborers or mechanics, subject to the provisions of paragraph (d) of this clause; also, regular contributions made or costs incurred for more than a weekly period (but not less often than quarterly) under plans, funds, or programs which cover the particular weekly period, are deemed to be constructively made or incurred during such period. Such laborers and mechanics shall be paid not less than the appropriate wage rate and fringe benefits in the wage determination for the classification of work actually performed, without regard to skill, except as provided in the clause entitled Apprentices and Trainees. Laborers or mechanics performing work in more than one classification may be compensated at the rate specified for each classification for the time actually worked therein; provided, that the employer's payroll records accurately set forth the time spent in each classification in which work is performed. The wage determination (including any additional classifications and wage rates conformed under paragraph (b) of this clause) and the Davis-Bacon poster (WH-1321) shall be posted at all times by the Contractor and its subcontractors at the site of the work in a prominent and accessible place where it can be easily seen by the workers.

(b) (1) The Contracting Officer shall require that any class of laborers or mechanics, including helpers, which is not listed in the wage determination and which is to be employed under the contract shall be classified in conformance with the wage determination. The Contracting Officer shall approve an additional classification and wage rate and fringe benefits therefor only when all the following criteria have been met:

(i) Except with respect to helpers, as defined in Section 22.401 of the Federal Acquisition Regulation, the work to be performed by the classification requested is not performed by a classification in the wage determination.

(ii) The classification is utilized in the area by the construction industry.

(iii) The proposed wage rate, including any bona fide fringe benefits, bears a reasonable relationship to the wage rates contained in the wage determination.

(iv) With respect to helpers, such a classification prevails in the area in which the work is performed.

(2) If the Contractor and the laborers and mechanics to be employed in the classification (if known), or their representatives, and the Contracting Officer agree on the classification and wage rate (including the amount designated for fringe benefits, where appropriate), a report of the action taken shall be sent by the Contracting Officer to the Administrator of the Wage and Hour Division, Employment Standards Administration, U.S. Department of Labor, Washington, DC 20210. The Administrator or an authorized representative will approve, modify, or disapprove every additional classification action within 30 days of receipt and so advise the Contracting Officer or will notify the Contracting Officer within the 30-day period that additional time is necessary.

(3) In the event the Contractor, the laborers or mechanics to be employed in the classification, or their representatives, and the Contracting Officer do not agree on the proposed classification and wage rate (including the amount designated for fringe benefits, where appropriate), the Contracting Officer shall refer the questions, including the views of all interested parties and the recommendation of the Contracting Officer, to the Administrator of the Wage and Hour Division for determination. The Administrator, or an authorized representative, will issue a determination

within 30 days of receipt and so advise the Contracting Officer or will notify the Contracting Officer within the 30-day period that additional time is necessary.

(4) The wage rate (including fringe benefits, where appropriate) determined pursuant to subparagraphs (b)(2) and (b)(3) of this clause shall be paid to all workers performing work in the classification under this contract from the first day on which work is performed in the classification.

(c) Whenever the minimum wage rate prescribed in the contract for a class of laborers or mechanics includes a fringe benefit which is not expressed as an hourly rate, the Contractor shall either pay the benefit as stated in the wage determination or shall pay another bona fide fringe benefit or an hourly cash equivalent thereof.

(d) If the Contractor does not make payments to a trustee or other third person, the Contractor may consider as part of the wages of any laborer or mechanic the amount of any costs reasonably anticipated in providing bona fide fringe benefits under a plan or program; *provided*, that the Secretary of Labor has found, upon the written request of the Contractor, that the applicable standards of the Davis-Bacon Act have been met. The Secretary of Labor may require the Contractor to set aside in a separate account assets for the meeting of obligations under the plan or program.

3. 52.222-7 WITHHOLDING OF FUNDS (FEB 1988)
The Contracting Officer shall, upon his or her own action or upon written request of an authorized representative of the Department of Labor, withhold or cause to be withheld from the Contractor under this contract or any other Federal contract with the same Prime Contractor, or any other Federally assisted contract subject to Davis-Bacon prevailing wage requirements, which is held by the same Prime Contractor, so much of the accrued payments or advances as may be considered necessary to pay laborers and mechanics, including apprentices, trainees, and helpers, employed by the Contractor or any subcontractor the full amount of wages required by the contract. In the event of failure to pay any laborer or mechanic, including any apprentice, trainee, or helper, employed or working on the site of the work, all or part of the wages required by the contract, the Contracting Officer may, after written notice to the Contractor, take such action as may be necessary to cause the suspension of any further payment, advance, or guarantee of funds until such violations have ceased.

4. 52.222-8 PAYROLLS AND BASIC RECORDS (FEB 1988)

(a) Payrolls and basic records relating thereto shall be maintained by the Contractor during the course of the work and preserved for a period of 3 years thereafter for all laborers and mechanics working at the site of the work. Such records shall contain the name, address, and social security number of each such worker, his or her correct classification, hourly rates of wages paid (including rates of contributions or costs anticipated for bona fide fringe benefits or cash equivalents thereof of the types described in section 1(b)(2)(B) of the Davis-Bacon Act), daily and weekly number of hours worked, deductions made, and actual wages paid. Whenever the Secretary of Labor has found, under paragraph (d) of the clause entitled Davis-Bacon Act, that the wages of any laborer or mechanic include the amount of any costs reasonably anticipated in providing benefits under a plan or program described in section 1(b)(2)(B) of the Davis-Bacon Act, the Contractor shall maintain records which show that the commitment to provide such benefits is enforceable, that the plan or program is financially responsible, and that the plan or program has been communicated in writing to the laborers or mechanics affected, and records which show the costs anticipated or the actual cost incurred in providing such benefits. Contractors employing apprentices or trainees under approved programs shall maintain written evidence of the registration of apprenticeship programs and certification of trainee programs, the registration of the apprentices and trainees, and the ratios and wage rates prescribed in the applicable programs.

(b) (1) The Contractor shall submit weekly for each week in which any contract work is performed a copy of all payrolls to the Contracting Officer. The payrolls submitted shall set out accurately and completely all of the information required to be maintained under paragraph (a) of this clause. This information may be submitted in any form desired. Optional Form WH-347 (Federal Stock Number 029-005-00014-1) is available for this purpose and may be purchased from the Superintendent of Documents, U.S. Government Printing Office, Washington, DC 20402. The Prime Contractor is responsible for the submission of copies of payrolls by all subcontractors.

(2) Each payroll submitted shall be accompanied by a "Statement of Compliance," signed by the Contractor or subcontractor or his or her agent who pays or supervises the payment of the persons employed under the contract and shall certify—

(i) That the payroll for the payroll period contains the information required to be maintained under paragraph (a) of this clause and that such information is correct and complete;

(ii) That each laborer or mechanic (including each helper, apprentice, and trainee) employed on the contract during the payroll period has been paid the full weekly wages earned, without rebate, either directly or indirectly, and that no deductions have been made either directly or indirectly from the full wages earned, other than permissible deductions as set forth in the Regulations, 29 CFR Part 3; and

(iii) That each laborer or mechanic has been paid not less than the applicable wage rates and fringe benefits or cash equivalents for the classification of work performed, as specified in the applicable wage determination incorporated into the contract.

(3) The weekly submission of a properly executed certification set forth on the reverse side of Optional Form WH-347 shall satisfy the requirement for submission of the "Statement of Compliance" required by subparagraph (b)(2) of this clause.

(4) The falsification of any of the certifications in this clause may subject the Contractor or subcontractor to civil or criminal prosecution under Section 1001 of Title 18 and Section 3729 of Title 31 of the United States Code.

(c) The Contractor or subcontractor shall make the records required under paragraph (a) of this clause available for inspection, copying, or transcription by the Contracting Officer or authorized representatives of the Contracting Officer or the Department of Labor. The Contractor or subcontractor shall permit the Contracting Officer or representatives of the Contracting Officer or the Department of Labor to interview employees during working hours on the job. If the Contractor or subcontractor fails to submit required records or to make them available, the Contracting Officer may, after written notice to the Contractor, take such action as may be necessary to cause the suspension of any further payment. Furthermore, failure to submit the required records upon request or to make such records available may be grounds for debarment action pursuant to 29 CFR 5.12.

5. 52.222-9 APPRENTICES AND TRAINEES (FEB 1988)

(a) *Apprentices.* Apprentices will be permitted to work at less than the predetermined rate for the work they performed when they are employed pursuant to and individually registered in a bona fide apprenticeship program registered with the U.S. Department of Labor, Employment and Training Administration, Bureau of Apprenticeship and Training, or with a State Apprenticeship Agency recognized by the Bureau, or if a person is employed in his or her first 90 days of probationary employment as an apprentice in such an apprenticeship program, who is not individually registered in the program, but who has been certified by the Bureau of Apprenticeship and Training or a State Apprenticeship Agency (where appropriate) to be eligible for probationary employment as an apprentice. The allowable ratio of apprentices to journeymen on the job site in any craft classification shall not be greater than the ratio permitted to the Contractor as to the entire work force under the registered program. Any worker listed on a payroll at an apprentice wage rate, who is not registered or otherwise employed as stated in this paragraph, shall be paid not less than the applicable wage determination for the classification of work actually performed. In addition, any apprentice performing work on the job site in excess of the ratio permitted under the registered program shall be paid not less than the applicable wage rate on the wage determination for the work actually performed. Where a contractor is performing construction on a project in a locality other than that in which its program is registered, the ratios and wage rates (expressed in percentages of the journeyman's hourly rate) specified in the Contractor's or subcontractor's registered program shall be observed. Every apprentice must be paid at not less than the rate specified in the registered program for the apprentice's level of progress, expressed as a percentage of the journeyman hourly rate specified in the applicable wage determination. Apprentices shall be paid fringe benefits in accordance with the provisions of the apprenticeship program. If the apprenticeship program does not specify fringe benefits, apprentices must be paid the full amount of fringe benefits listed on the wage determination for the applicable classification. If the Administrator determines that a different practice prevails for the applicable apprentice classification, fringes shall be paid in accordance with that determination. In the event the Bureau of Apprenticeship and Training, or a State Apprenticeship Agency recognized by the Bureau, withdraws approval of an apprenticeship program, the Contractor will no longer be permitted to utilize apprentices at less than the applicable predetermined rate for the work performed until an acceptable program is approved.

(b) *Trainees.* Except as provided in 29 CFR 5.16, trainees will not be permitted to work at less than the predetermined rate for the work performed unless they are employed pursuant to and individually registered in a program which has received prior approval, evidenced by formal certification by the U.S. Department of Labor, Employment and Training Administration. The ratio of trainees to journeymen on the job site shall not be greater than permitted under the plan approved by the Employment and Training Administration. Every trainee must be paid at not less than the rate specified in the approved program for the trainee's level of progress, expressed as a percentage of the journeyman hourly rate specified in the applicable wage determination. Trainees shall be paid fringe benefits in accordance with the provisions of the trainee program. If the trainee program does not mention fringe benefits, trainees shall be paid the full amount of fringe benefits listed in the wage determination unless the Administrator of the Wage and Hour Division determines that there is an apprenticeship program associated with the corresponding journeyman wage rate in the wage determination which provides for less than full fringe benefits for apprentices. Any employee listed on the payroll at a trainee rate who is not registered and participating in a training plan approved by the Employment and Training Administration shall be paid not less than the applicable wage rate in the wage determination for the classification of work actually performed. In addition, any trainee performing work on the job site in excess of the ratio permitted under the registered program shall be paid not less than the applicable wage rate in the wage determination for the work actually performed. In the event the Employment and Training Administration withdraws approval of a training program, the Contractor will no longer be permitted to utilize trainees at less than the applicable predetermined rate for the work performed until an acceptable program is approved.

(c) *Equal employment opportunity.* The utilization of apprentices, trainees, and journeymen under this clause shall be in conformity with the equal employment opportunity requirements of Executive Order 11246, as amended, and 29 CFR Part 30.

6. 52.222-10 COMPLIANCE WITH COPELAND ACT REQUIREMENTS (FEB 1988)
The Contractor shall comply with the requirements of 29 CFR Part 3, which are hereby incorporated by reference in this contract.

7. 52.222-11 SUBCONTRACTS (LABOR STANDARDS) (FEB 1988)

(a) The Contractor or subcontractor shall insert in any subcontracts the clauses entitled *Davis-Bacon Act, Contract Work Hours and Safety Standards Act—Overtime Compensation, Apprentices and Trainees, Payrolls and Basic Records, Compliance with Copeland Act Requirements, Withholding of Funds, Subcontracts (Labor Standards), Contract Termination—Debarment, Disputes Concerning Labor Standards, Compliance with Davis-Bacon and Related Act Regulations, and Certification of Eligibility*, and such other clauses as the Contracting Officer may, by appropriate instructions, require, and also a clause requiring subcontractors to include these clauses in any lower tier subcontracts. The Prime Contractor shall be responsible for compliance by any subcontractor or lower tier subcontractor with all the contract clauses cited in this paragraph.

(b) (1) Within 14 days after award of the contract, the Contractor shall deliver to the Contracting Officer a completed Statement and Acknowledgment Form (SF 1413) for each subcontract, including the subcontractor's signed and dated acknowledgment that the clauses set forth in paragraph (a) of this clause have been included in the subcontract.

(2) Within 14 days after the award of any subsequently awarded subcontract the Contractor shall deliver to the Contracting Officer an updated completed SF 1413 for such additional subcontract.

8. 52.222-12 CONTRACT TERMINATION—DEBARMENT (FEB 1988)
A breach of the contract clauses entitled *Davis-Bacon Act, Contract Work Hours and Safety Standards Act—Overtime Compensation, Apprentices and Trainees, Payrolls and Basic Records, Compliance with Copeland Act Requirements, Subcontracts (Labor Standards), Compliance with Davis-Bacon and Related Act Regulations, or Certification of Eligibility* may be grounds for termination of the contract, and for debarment as a Contractor and subcontractor as provided in 29 CFR 5.12.

9. 52.222-13 COMPLIANCE WITH DAVIS-BACON AND RELATED ACT REGULATIONS (FEB 1988)
All rulings and interpretations of the Davis-Bacon and Related Acts contained in 29 CFR Parts 1, 3, and 5 are hereby incorporated by reference in this contract.

10. 52.222-14 DISPUTES CONCERNING LABOR STANDARDS (FEB 1988)
The United States Department of Labor has set forth in 29 CFR Parts 5, 6, and 7 procedures for resolving disputes concerning labor standards requirements. Such disputes shall be resolved in accordance with those procedures and not the disputes clause of this contract. Disputes within the meaning of this clause include disputes between the Contractor (or any of its subcontractors) and the contracting agency, the U.S. Department of Labor, or the employees or their representatives.

11. 52.222-15 CERTIFICATION OF ELIGIBILITY (FEB 1988)
(a) By entering into this contract, the Contractor certifies that neither it (nor he or she) nor any person or firm who has an interest in the Contractor's firm is a person or firm ineligible to be awarded Government contracts by virtue of section 3(a) of the Davis-Bacon Act or 29 CFR 5.12(a)(1).

(b) No part of this contract shall be subcontracted to any person or firm ineligible for award of a Government contract by virtue of section 3(a) of the Davis-Bacon Act or 29 CFR 5.12(a)(1).

(c) The penalty for making false statements is prescribed in the U.S. Criminal Code, 18 U.S.C. 1001.

4.0 GENERAL ARCHITECTURAL

4.1. QUALITY AND APPEARANCE OF BUILDING EXTERIOR

The space offered should be located in a new or modern office building with facade of stone, marble, brick, stainless steel, aluminum or other permanent materials in good condition acceptable to the Contracting Officer. The building should be compatible with its surroundings. Overall the building should project a professional and aesthetically pleasing appearance including an attractive front and entrance way. The building should have energy efficient windows or glass areas consistent with the structural integrity of the building, unless not appropriate for intended use. The facade, downspouts, roof trim and window casing are to be clean and in good condition. If not in a new or modern office building, the space offered should be in a building that has undergone, or will complete by occupancy, first class restoration or adaptive reuse for office space with modern conveniences. If the restoration work is underway or proposed, then architectural plans acceptable to the Contracting Officer must be submitted as part of the offer.

4.2. WORK PERFORMANCE

All work in performance of this lease must be done by skilled workers or mechanics and be acceptable to the Contracting Officer.

4.3. BUILDING SYSTEMS CERTIFICATION

Whenever requested, the Lessor shall furnish at no cost to GSA a certification by a registered professional engineer(s) that the building and its systems as designed and constructed will satisfy the requirements of this lease.

4.4. SPACE EFFICIENCY

The design of the space offered must be conducive to efficient layout and good utilization.

4.5. FLOOR PLANS AFTER OCCUPANCY

Within 30 days after occupancy, 1/8-inch as-built mylar reproducible full floor plans showing the space under lease as well as corridors, stairways, and core areas must be provided to the Contracting Officer.

4.6. CAD FLOOR PLANS (SEP 1991)

A computer-aided design diskette(s), with files of as-built floor plans showing the space under lease, as well as corridors, stairways, and core areas, must be provided to the Contracting Officer along with the mylar drawings required above. The diskette shall be formatted in the latest release of AutoCAD. It shall be labeled with building name, address, list of drawing(s), date of the drawing(s), and Lessor's architect and phone number. The digital data shall be delivered on 3½ inch or 5¼ inch, double sided, double or high density diskette. A demonstration of the diskette may be requested by the Contracting Officer on GSA equipment using the Lessor's operator.

4.7. FLOORS AND FLOOR LOAD (JUN 1994)

All adjoining floor areas must be of a common level, non-slip, and acceptable to the Contracting Officer. Underfloor surfaces must be smooth and level. Office areas shall have a minimum live load capacity of 50 pounds per occupiable square foot plus 20 pounds per occupiable square foot for moveable partitions. Storage areas shall have a minimum live load capacity of 100 pounds per occupiable square foot including moveable partitions. Written certification of the floor load capacity, at no cost to the Government, by a registered professional engineer may be required. Calculations and structural drawings may also be required.

4.8. EXITS AND ACCESS (SEP 1991)

Vestibules shall be provided at public entrances and exits wherever weather conditions and heat loss are important factors for consideration. In the event of negative air pressure conditions, provisions shall be made for equalizing air pressure.

4.9. WINDOWS (SEP 1991)

Office space must have windows in each exterior bay unless waived by the Contracting Officer.

All windows shall be weathertight. Opening windows must be equipped with locks. Off-street, ground level windows and those accessible from fire escapes, adjacent roofs, and other structures that can be opened shall be fitted with a sturdy locking device.

4.10. HANDICAPPED ACCESSIBILITY (JUL 1994)

(a) PARKING AND LOADING ZONES:

(1) If parking is provided for employees or visitors or both, then level accessible spaces shall be provided and designated in the parking area(s) nearest an accessible entrance on an accessible route in conformance with the following table:

TOTAL SPACE IN LOT(S)	MINIMUM NUMBER OF ACCESSIBLE SPACES
1 - 25	1
26 - 50	2
51 - 76	3
76 - 100	4
101 - 151	5
151 - 200	6
201 - 300	7
301 - 400	8
401 - 500	9
501 - 1000	2% of total
> 1000	20 plus 1 for each 100 over 1000

(2) Accessible spaces shall be at least 8 feet wide with a 5-foot-wide access aisle to walks and ramps. Two spaces may share a common aisle. These spaces should be designed so the disabled are not compelled to wheel or walk behind parked cars. Where passenger loading zones exist, an access aisle at least 5 feet wide and 20 feet long adjacent and parallel to the vehicle pull-up space shall be provided on an accessible route. Accessible spaces shall be designated as reserved for the disabled by a sign with the symbol of accessibility. Such sign shall not be obscured by a vehicle parked in the space.

(b) ROUTE:

(1) At least one accessible route having no steps or abrupt changes in level shall connect with all accessible elements, spaces, buildings, and courses of passage. The minimum clear width of an accessible route shall be 36 inches. If an accessible route is less than 60 inches in width then it shall have level passing zones, spaced at no more than 200 feet apart, measuring a minimum of 60 inches by 60 inches.

(2) Floor surfaces and carpet shall be stable, secure, firm and slip resistant. Changes in level up to ¼ inch may be vertical and without edge treatment. Level changes between ¼ inch and ½ inch shall be beveled with a slope no greater than 1:2. Changes exceeding ½ inch shall be treated as a ramp. Gratings in a route surface shall have spaces no wider than ½ inch in one direction and shall be placed so that the long dimension of openings is perpendicular to the dominant direction of travel.

(3) Objects projecting from walls with their leading edges between 27 and 80 inches above the finished floor shall protrude no more than 4 inches into an accessible route. Freestanding objects mounted on posts or pylons may overhang 12 inches maximum from 27 to 80 inches above the ground or the finished floor. Objects mounted with their leading edges at or below 27 inches above the finished floor may protrude any distance. However, no protruding objects shall reduce the clear width of an accessible route or maneuvering space. If vertical clearance of an area adjoining an accessible route is reduced to less than 80 inches, a barrier to warn blind or visually impaired persons shall be provided.

(4) Mechanical rooms and spaces which are not normally frequented by the public or occupants and are not part of an accessible or emergency route are excepted and need not be accessible.

(c) ENTRANCE AND EGRESS:

At least one principal entrance at each grade floor level shall be accessible. When existing entrances normally serve any of the following functions, then at least one of the entrances serving each function shall be accessible: transportation facilities, passenger loading zones, accessible parking facilities, taxi stands, public streets and sidewalks or accessible interior vertical access. An accessible entrance shall be part of an accessible route and shall include an accessible door. A service entrance shall not be the sole accessible entrance unless it is the only entrance. Accessible entrances shall be identified by the international symbol of accessibility. The signs shall be located so that handicapped individuals approaching the building will be directed to the accessible entrance. All applicable specifications for entrance shall apply to egress.

(d) RAMPS:
Any part of an accessible route with a slope greater than 1 foot rise in 20 feet shall be consi[illegible]d a ramp. Where ramps are necessary, they shall have a non-slip surface with a slope no greater than 1 foot rise in 12 feet. Ramps must have a minimum clear width of 3 feet with level landings at the top and bottom of each ramp run. Each landing shall be at least 5 feet in length and as wide as any ramp run leading into it. The maximum rise for any run shall be 30 inches. Intermediate landings for turning ramps shall measure a minimum of 5 feet by 5 feet. Handrails complying with "Handrails" shall be provided on both sides of all ramps with a vertical rise greater than 6 inches. Ramps with drop-offs shall have curbs (minimum 2 inches high), walls, railings or projecting surfaces. Curb ramps shall be provided wherever an accessible route crosses a curb. Curb ramps shall not interfere with walks or vehicular traffic. The maximum slope of a curb ramp shall be a 1 inch rise per 12-inch run. The maximum length of a curb ramp shall be 6 feet with a minimum width of 36 inches, exclusive of flared sides. If no other alternative is feasible, accessible platform lifts may be used in lieu of a ramp or elevator. Lifts shall have accessible controls and clearances, shall comply with applicable safety regulations, and should facilitate unassisted entry and exit.

(e) STAIRS:
(1) If floors are serviced by an accessible elevator, then stairs connecting these floors need not meet the accessibility requirements in "Stairs" and "Handrails."

(2) All steps on a single flight of stairs shall have uniform riser heights and uniform tread widths. Open riser stairs are not permitted. Risers shall be sloped or the underside of the nosing shall have an angle of not less than 60 degrees from the horizontal.

(3) Stair treads shall not have abrupt nosings and shall be no less than 11 inches wide, measured from riser to riser. The radius of curvature at the leading edge of the tread shall be no greater than ½ inch. The maximum nosing projection shall be no greater than 1½ inch.

(4) Tactile warning indicators shall not be used to identify exit stairs.

(f) HANDRAILS:
Handrails shall be provided on both sides of stairs and ramps. Handrails shall be continuous and extend a minimum of 12 inches beyond the top riser and 12 inches plus the width of one tread beyond the bottom riser. At the top, the 12-inch extension shall be parallel with the floor. At the bottom, the handrail shall continue to slope for a distance of one tread width from the bottom riser with the 12-inch remainder being horizontal and parallel with the floor. The inside handrail on switchback, dogleg stairs or ramps shall always be continuous. Handrails shall not present a hazard and shall be either rounded or returned smoothly to the floor, wall, or post. All handrails and adjacent surfaces shall be free of any sharp or abrasive elements. Clear space between handrails and the wall shall be 1½ inches. Gripping surfaces shall be uninterrupted and mounted between 30 and 34 inches above stair nosings. The diameter or width of the gripping surfaces of a handrail shall be 1¼ inches to 1½ inches, or the shape shall provide an equivalent gripping surface. Handrails shall not rotate within their fittings.

(g) DOORS:
(1) At least one accessible door or opening shall serve each accessible entrance, space, route, egress, and emergency place of refuge. Revolving doors or turnstiles shall not be the only means of passage along an accessible route. Gates shall meet all applicable specifications for doors.

(2) Doorways shall have a minimum clear opening of 32 inches with the door open 90 degrees, unless a wider clearance is specified within "Architectural Finishes." If doorways have two independently operated door leaves, then at least one leaf shall provide a minimum clear opening of 32 inches. Doors not requiring full user passage, such as shallow closets, may have a minimum clear opening of 20 inches. Doors in a series shall swing either in the same direction or away from the space between the doors. The minimum space between hinged or pivoted doors in a series shall be 48 inches plus the width of any door swinging into the space.

(3) Raised thresholds at doors shall be beveled with a slope no greater than 1:2 and shall not exceed ¾ inch in height for exterior sliding doors or ½ inch for other doors. Operating hardware on accessible doors shall be mounted no higher than 48 inches above the finished floor and shall have a grip and operation which facilitates use with one hand without tight grasping, tight pinching, or twisting of the wrist. Doors leading to areas which are potentially dangerous for blind individuals shall have textured warning handles or handle covers. If a door has an automatic closer, then the sweep period shall be adjusted so that from an open position of 70 degrees, the door will take at least 3 seconds to move to a point 3 inches from the latch. Fire doors shall have the minimum opening force allowable by the appropriate administrative authority. All other interior doors shall have a maximum opening force of 5 foot-pounds. If power-operated doors are provided, they shall comply with ANSI A156.10-1979.

(4) Clearances shall be provided at doors that are not automatic or power assisted and shall comply as required below.

SWING DOOR MANEUVERING CLEARANCES:
(i) Where the approach faces the door, the maneuvering clearance shall extend a minimum of 5 feet from the swing side of the door, 4 feet from the opposite side and a minimum of 1½ feet past the latch side (pull side) and, for doors with automatic closers, a minimum of 1 foot past the latch side (push side) of the door.
(ii) Where the approach is from the hinge side of the door, the maneuvering clearance shall extend a minimum of 5 feet from the swing side of the door when the clearance past the latch (pull side) extends to a minimum of 3 feet, 4½ feet

from the swing side of the door, then the clearance past the latch (pull side) extends a minimum of 3½ feet, 4 feet from the opposite side and a minimum of 2 feet past the hinged side (push side).

(iii) Where the approach is from the latch side of the door, the maneuvering clearance shall extend a minimum of 4½ feet from the swing side of the door, 4 feet from the opposite side and a minimum of 2 feet past the latch side (push and pull sides).

(iv) where automatic door closers are not used and the approach is from the side, the above minimum maneuvering clearances are reduced by ½ foot from either face of the door except on the pull side on a latch side approach.

SLIDING AND FOLDING DOOR MANEUVERING CLEARANCES:

(i) Where the approach faces the door, the maneuvering clearance shall extend a minimum of 4 feet from the face of the door and have width at least as wide as the door.

(ii) Where the approach is from the slide side of the door, the maneuvering clearance shall extend a minimum of 3½ feet from the face of the door and 4½ feet from the latch.

(iii) Where the approach is from the latch side of the door, the maneuvering clearance shall extend a minimum of 3½ feet from the face of the door and 2 feet from the latch.

(h) ELEVATORS:
One accessible passenger elevator complying with American National Standards Institute Handbook (ANSI A117.1-1986) and Section 4.10 Of UFAS, entitled "Elevators," shall serve each level in all multistory buildings and facilities. If more than one passenger elevator is provided, then each elevator shall be equally accessible. All elevator control buttons shall be at least ¾ inch in their smallest dimension and shall be raised or flush. Additional specifications for elevators are located in the "Elevators" paragraph of the "Mechanical, Electrical, Plumbing" section of this solicitation and in the "Controls" paragraph below.

(i) TELEPHONES:
If public telephones are provided, then at least one unit per floor and at least one unit per bank of adjacent units shall provide accessible operation and comply with "Controls." Accessible telephones shall have push-button controls where available. The handset on an accessible telephone shall be equipped with a cord at least 29 inches long and a receiver that generates a magnetic field in the area of the receiver cap. At least one accessible public telephone shall be equipped with a volume control and clearly identified as such. Telephone books shall also be accessible.

(j) CONTROLS:

(1) Accessible controls and operating mechanisms are required in accessible spaces, along accessible routes, or as parts of accessible elements. Accessible controls shall have clear approach areas at least 30 inches wide by 48 inches long that allow either forward or parallel approach by a wheelchair. Accessible controls shall be between 15 inches and 48 inches in height for a forward approach or between 9 inches and 54 inches for a parallel approach. Accessible controls and operating mechanisms shall be operable with one hand and shall not require tight grasping, pinching, or twisting of the wrist. The force required to activate controls shall be no greater than 5 foot-pounds.

(2) Standard wall-mounted electrical and communications system outlets shall be at least 15 inches above the floor.

(3) Elevator hall and lobby call buttons shall be centered at 42 inches above the floor and interior buttons shall comply with the above height restrictions. The highest part of a two-way communication system inside an elevator cab cannot exceed 48 inches from the floor.

(k) SIGNAGE:

(1) The following elements and spaces of facilities which are accessible to handicapped persons shall be identified with the international symbol of accessibility:

(i) parking spaces designated as reserved for physically handicapped people;

(ii) passenger loading zones;

(iii) accessible entrances, and

(iv) accessible toilet and bathing facilities.

(2) Permanent signage for elements, spaces and rooms of accessible facilities shall also comply with the following:

(i) Letters and numbers shall have a width-to-height ratio between 3:5 and 1:1 and a stroke width-to-height ratio between 1:5 and 1:10. They shall also be raised 1/32 inch minimum and shall be sans serif characters.

(ii) Raised characters and symbols shall contrast with their background and shall be between 5/8 inch and 2 inches high, and shall have a stroke width of at least ¼ inch. Symbols or pictographs shall be raised 1/32 inch minimum.

(iii) Interior signs shall be mounted on the latch side of doors at a height of 54 to 66 inches.

(l) ALARMS:
In all new construction, and in existing buildings where the fire alarm system is being replaced or installed, the fire alarm system is required to have the following:

(1) (Noncoded) audible and visible alarm devices in accordance with the National Fire Protection Association (NFPA) Standard No. 72G

or

(2) (Noncoded) audible and visible alarm devices in accordance with association (NFPA) Standard No. 72G and an equivalent specialized warning system for the hearing impaired. When utilizing visible alarm devices, the indirect primary signaling method is recommended to be used. Also, notification characteristics of the audible and visual alarm devices shall be in accordance with NFPA 72G.

(m) DRINKING FOUNTAINS:
The Lessor shall provide a minimum of one chilled drinking fountain within every 150 feet of travel distance on each floor of office space. Approximately 50 percent or at least 1 (whichever is greater) of the water fountains on each floor must be accessible to the handicapped. Accessible fountains shall have spouts and hand-operated controls which are front-mounted and no higher than 36 inches above the finished floor. The spout shall provide water flowing at least 4 inches high in a trajectory parallel or nearly parallel to the front of the unit. Accessible fountains shall meet the "Handicapped Accessibility" subparagraph entitled "Controls." Accessible wall and post mounted units shall have a clear knee space between the bottom of the apron and the floor at least 27 inches high, 30 inches wide, and 17 to 19 inches deep. Units shall have a minimum clear space of 30 inches by 48 inches to allow forward wheelchair approach. Units not having free space under them shall have a clear floor space of 30 inches by 48 inches to allow a side approach from a person in a wheelchair.

(n) STORAGE FACILITIES:
If storage facilities such as cabinets, shelves, or closets are provided in accessible spaces, at least one of each type shall have the following specifications. A clear floor space at least 30 inches by 48 inches shall be provided that allows either a forward or parallel approach by a person in a wheel chair. Hardware shall be installed in accordance with the controls paragraph. Accessible storage spaces shall have a reach range no lower than 9 inches from the floor and no higher than 54 inches from the floor.

(o) ASSEMBLY AREAS:
(1) If places of assembly are provided in accessible areas, they shall comply with the following table:

CAPACITY OF SEATING AND ASSEMBLY AREAS	NUMBER OF REQUIRED WHEELCHAIR LOCATIONS
< than 50	1
50 - 75	3
76 - 100	4
101 - 150	5
151 - 200	6
201 - 300	7
301 - 400	8
401 - 500	9
501 - 1000	2% of total
> 1000	20 plus 1 for each 100 over 1000

(2) Assembly areas with audio amplification equipment shall have a listening system for a reasonable number of people, but no fewer than two, with a severe hearing loss. A clear, level floor space of 60 inches by 66 inches for side access seating or 48 inches by 66 inches for forward/rear access seating shall be provided.

(p) SEATING AND WORK SURFACES:
If built in seating or work surfaces are provided in accessible areas, then 5 percent or at least one of each type shall be made accessible. Tops of work surfaces shall be 28 inches to 34 inches from the floor. Knee spaces shall be at least 27 inches high, 30 inches wide, and 19 inches deep.

(q) TOILET ROOMS:

(1) Accessible toilet rooms shall be on accessible routes, have accessible doors, have unobstructed maneuvering clearances at least 5 feet in diameter which may overlap the clear space required by other accessible features. At least one standard accessible toilet stall with the following features and clearances shall be provided in each accessible toilet room:

(i) Accessible toilet rooms shall be identified with the international symbol of accessibility, located on the latch side of the door at a height of 55 inches minimum and 66 inches maximum.

(ii) A stall shall have a clear floor area with dimensions at least 60 inches wide and 56 inches deep for wall mounted closets or 59 inches deep for floor mounted closets.

(iii) A stall door shall be located in the corner opposite the toilet and shall not swing over the stall's minimum clear floor area.

(iv) The top center of the toilet seat shall be located 17 to 19 inches above the floor and 18 inches from a side stall wall. Seats shall not be sprung to return to a lifted position.

(v) Two sturdy grab bars with a minimum diameter of 1¼ to 1½ inches shall be mounted 1½ inches from the wall and parallel to the floor at a height of 33 to 36 inches. One bar shall be at least 3 feet long, run above the toilet, and begin at a maximum of 6 inches from the corner adjacent to the toilet. The second bar shall begin at a maximum of 12 inches from the corner adjacent to the toilet and run to a point at least 54 inches from the rear wall. Bars shall be unobstructed and free of sharp or abrasive edges.

(vi) Toilet paper dispensers having an unrestricted paper flow shall be located within reach and at least 19 inches above the floor.

(vii) Flush controls shall be automatic or hand operated and mounted on the wide side of toilet areas no more than 44 inches above the floor.

(2) In instances of initial alterations work where provisions for a standard accessible stall are structurally impracticable or where plumbing code requirements prevent combining existing stalls to provide space, an alternate stall may be provided. Alternate stalls shall have the following minimum substitute features and clearances:

(i) A clear floor area shall have dimensions at least 36 inches wide and 66 inches deep for wall mounted closets or 69 inches deep for floor mounted closets. Bars shall be mounted on each side, begin at a maximum of 12 inches from the rear wall, and run to a point at least 54 inches from the rear wall.

or

(ii) A clear floor area shall have dimensions at least 48 inches wide and 66 inches deep for wall mounted closets or 69 inches deep for floor mounted closets. One bar shall be at least 3 feet long, run above the toilet, and begin at a maximum of 6 inches from the corner adjacent to the toilet. The second bar shall begin at a maximum of 12 inches from the corner adjacent to the toilet and run to a point at least 54 inches from the rear wall.

(3) Where urinals are provided, at least one shall be accessible. Accessible urinals shall be stall-type or wall-hung with an elongated rim at a maximum of 17 inches above the floor, shall have automatic or hand operated flush controls no more than 44 inches above the floor, and shall have a clear floor space 30 inches by 48 inches for forward approach. Privacy shields that do not extend beyond the front edge of the urinal rim may be provided with 29 inches clearance between them.

(4) Where lavatories, mirrors, controls, dispensers, receptacles, or other equipment is provided, at least one of each shall be accessible to the handicapped. Accessible mirrors shall be mounted with the bottom edge of the reflecting surface no higher than 40 inches from the floor. Accessible lavatories shall be mounted with the rim or counter surface no higher than 34 inches and the lower front edge at least 29 above the finished floor. Accessible lavatories shall have a knee clearance at least 8 inches deep and 27 inches high, a toe clearance at least 9 inches high, and a clear forward approach at least 30 inches wide and 48 inches deep which extends 17 to 19 inches underneath the lavatory. Accessible lavatories shall have accessible faucet controls. Self-closing faucet valves must remain open at least 10 seconds. In the area beneath all lavatories, there shall be no sharp or abrasive surfaces. Hot water and drain pipes shall be insulated or covered and protrude no more than 6 inches from the wall.

4.11. LANDSCAPING (OCT 1996)

Where topographical conditions permit, the site shall be landscaped for low maintenance and water conservation with plants that are either native or well-adapted to local growing conditions. The Contracting Officer shall approve the landscaping to be provided.

5.0 ARCHITECTURAL FINISHES

5.1. LAYOUT AND FINISHES

All required finish selection samples must be provided within 21 days of the request for such by the Contracting Officer. GSA shall deliver layout drawings and necessary finish selections to the Lessor within 65 days after award or after receipt of plans and samples, whichever is later.

5.2. CEILINGS AND INTERIOR FINISHES (SEP 1991)

~~Ceilings must be at least 8 feet and no more than 11 feet measured from floor to the lowest obstruction. Areas with raised flooring must maintain these ceiling height limitations above the finished raised flooring. The ceiling must have a minimum noise reduction coefficient (NRC) of 0.60 and a minimum Sound Transmission Class (STC) of 40 throughout the Government occupied space. Bulkheads and hanging or surface mounted light fixtures which impede traffic ways shall be avoided.~~

~~Ceilings must be a flat plane in each room and suspended with fluorescent recessed fixtures and finished as follows unless an alternate finish is approved by the Contracting Officer.~~

- ~~Restrooms: plaster or painted and taped gypsum board.~~
- ~~Offices and Conference Rooms: mineral and acoustical tile or lay in panels with textured or patterned surface and tegular edges or equivalent quality to be approved by the Contracting Officer.~~
- ~~Corridors and Eating/Galley Areas: plaster or painted and taped gypsum board or mineral acoustical tile.~~

5.3. WALL COVERINGS (SEP 1991)

~~PHYSICAL REQUIREMENTS:~~

~~Prior to occupancy, partitioned offices and open office areas shall be covered with vinyl or polyolefin commercial wall covering weighing not less that 13 ounces per square yard as specified in FS CCC W-108C or equivalent. The quality of finish shall be approved by the Contracting Officer.~~

~~Prior to occupancy all restrooms offered to comply with the restroom fixture schedule of this solicitation must have ceramic tile in splash areas and vinyl wall covering not less than 13 ounces per square yard as specified in FS CCC W-108C on remaining wall areas or equivalent quality as approved by the Contracting Officer, unless an alternate finish is approved by the Contracting Officer.~~

~~Prior to occupancy all elevator areas which access the Government's leased space, hallways within or accessing the Government's leased space and eating/galley areas within the Government's leased space are to be covered with vinyl wall coverings not less than 22 ounces per square yard as specified in FS CCC W-108C, or equivalent quality as approved by the Contracting Officer, unless an alternate finish is approved by the Contracting Officer.~~

~~REPLACEMENT:~~

~~All wall covering is to be maintained in "like new" condition for the life of the lease. Wall covering must be replaced or repaired at the Lessor's expense, including moving and replacing furnishings, (except where wall covering has been damaged due to the negligence of the Government), anytime during the occupancy by the Government if it is torn, peeling or permanently stained; the ceramic tile in the restrooms must be replaced or repaired if it is loose, chipped, broken or permanently discolored. All repair and replacement work is to be done after working hours.~~

~~SAMPLES:~~

~~The Lessor is to provide at least 5 samples of each type of wall covering to be installed for selection by the Contracting Officer.~~

~~PAINTING:~~

~~Prior to occupancy all surfaces designated by GSA for painting must be newly painted in colors acceptable to GSA. All painted surfaces, including any partitioning installed by the Government or the Lessor after Government occupancy, must be repainted after working hours at Lessor expense at least every 5 years. This includes moving and return of furniture. Public areas must be painted at least every 3 years.~~

5.4. DOORS: EXTERIOR (DEC 1992)

Exterior doors must be heavy duty, full flush, hollow steel construction, solid core wood, or insulated tempered glass. Wood doors shall be at least 1¾ inches thick. Exterior doors shall be weather-tight and open outward. Hinges, pivots, and pins shall be installed in a manner which prevents removal when the door is closed and locked.

5.5. DOORS: INTERIOR (SEP 1991)

Doors must have a minimum clear opening of 32 inches by 80 inches. Hollow core wood doors are not acceptable. They must be flush, solid-core natural wood, veneer faced or equivalent finish with no windows or vents. Any substitutions must be approved by the Contracting Officer.

5.6. DOORS: HARDWARE (DEC 1992)

Doors shall have door handles or door pulls with heavy weight hinges. All doors shall have corresponding door stops (wall or floor mounted). All public use doors and toilet room doors shall be equipped with kick plates. All door entrances from public corridors and exterior doors shall have automatic door closers. All door entrances from public corridors, exterior doors and other doors designated by the Government shall be equipped with 5-pin, tumbler cylinder locks and strike plates. All locks shall be master keyed. The Government shall be furnished with at least two master keys for each lock.

5.7. DOORS: IDENTIFICATION

Door identification shall be installed in approved locations adjacent to office entrances. The form of door identification must be approved by the Contracting Officer.

5.8. PARTITIONS: PERMANENT (SEP 1991)

Permanent partitions must be provided as necessary to surround stairs, corridors, elevator shafts, toilet rooms, janitor closets, and the Government-occupied premises from other tenants on the floor.

5.9. PARTITIONS: SUBDIVIDING (JUN 1994)

(a) Office subdividing partitions shall comply with local requirements. Partitioning must be designed to provide a Sound Transmission Class (STC) of 40. Partitioning shall be installed by the Lessor at locations to be determined by the Government. The partitioning shall extend from the finished floor to the finished ceiling. Any demolition of existing improvements which is necessary to satisfy the Government's layout shall be done at the Lessor's expense. Partitioning shall be provided as shown on the Government approved floor plan. Partitioning over interior office doors is included in the measurement. Permanent partitioning and partitioning which surrounds exterior walls will not be included in unit cost adjustments but should be included as part of the annual rental rate.

(b) Partitions may be prefinished or taped and painted. HVAC must be rebalanced and lighting repositioned, as appropriate, after installation of partitions.

5.10. FLOOR COVERING AND PERIMETERS (DEC 1991)

~~Floor covering shall be either resilient flooring or carpet, except as otherwise specified in this solicitation. Floor perimeters at partitions must have wood, rubber, vinyl, or carpet base. Exceptions must be approved by the Contracting Officer.~~

~~OFFICE AREAS:~~
~~Prior to occupancy, carpet or carpet tiles must cover all office areas partitioned or unpartitioned, including interior hallways and conference rooms. The use of existing carpet may be approved by the Contracting Officer; however, existing carpet must be shampooed before occupancy and must meet the static buildup requirement for new carpet.~~

~~SPECIALTY AREAS:~~
~~Resilient flooring is to be used in reproduction rooms, storage, file and other specialty rooms. The Offeror shall provide the Government with a minimum of 7 different color samples. The sample and color must be approved by GSA prior to installation. No substitutes may be made by the Offeror after sample selection.~~

~~TOILET AND SERVICE AREAS:~~
~~Terrazzo, unglazed ceramic tile, and/or quarry tile shall be used in all toilet and service areas unless another covering is approved by the Contracting Officer.~~

~~CARPET - SAMPLES:~~
~~When carpet must be newly installed or changed, the Offeror shall provide the Government with a minimum of 7 different color samples. The sample and color must be approved by GSA prior to installation. No substitutes may be made by the Offeror after sample selection.~~

~~CARPET - INSTALLATION:~~
~~Carpet must be installed in accordance with manufacturing instructions to lay smoothly and evenly.~~

~~CARPET - REPLACEMENT:~~
~~Carpet shall be replaced at least every 6 years during Government occupancy or any time during the lease when:~~

- ~~Backing or underlayment is exposed.~~
- ~~There are noticeable variations in surface color or texture.~~

~~Replacement includes moving and return of furniture, all done at the Lessors' expense.~~

RESILIENT FLOORING - REPLACEMENT

The flooring shall be replaced by the Lessor at no cost to the Government prior to or during Government occupancy when it has:

- Curls, upturned edges, or other noticeable variations in texture.

5.11. CARPET TILE (SEP 1991)

Approximately 75 percent of the space shall be carpeted with carpet tile.

Any carpet to be newly installed must meet the following specifications:

- Please refer to the carpet and padding specifications in the Special Requirements section of this Solicitation.

5.12. RESILIENT FLOORING (SEP 1991)

In addition to reproduction, file, and storage rooms, resilient flooring shall be used in the specialty rooms listed below:

Telephone Closet and Break room

5.13. ACOUSTICAL REQUIREMENTS

REVERBERATION CONTROL:

Ceilings in carpeted space shall have a Noise Reduction Coefficient (NRC) of not less than 0.55 in accordance with ASTM C-423. Ceilings in offices, conference rooms, and corridors having resilient flooring shall have an NRC of not less than 0.65.

AMBIENT NOISE CONTROL:

Ambient noise from mechanical equipment shall not exceed Noise Criteria curve (NC) 35 in accordance with the ASHRAE Handbook in offices and conference rooms; NC 40 in corridors, cafeterias, lobbies, and toilets; NC 50 in other spaces.

NOISE ISOLATION:

Rooms separated from adjacent spaces by ceiling-high partitions (not including doors) shall not be less than the following Noise Isolation Class (NIC) Standards when tested in accordance with ASTM E-336:

conference rooms:	NIC-40
offices:	NIC-35

CERTIFICATION:

The Contracting Officer may require at no cost to the Government, a certification attesting that acoustical requirements have been met. Certification must be accompanied by test reports by a qualified acoustical consultant verifying requirements for control of ambient noise and noise isolation.

The requirements of this Acoustical Requirements paragraph shall take precedence over any additional specifications in this solicitation if there is a conflict.

5.14. WINDOW COVERINGS (SEP 1991)

WINDOW BLINDS:

All exterior windows shall be equipped with window blinds. The blinds may be aluminum or plastic vertical blinds or horizontal blinds with aluminum slats of 1 inch width or less. The use of any other material must be approved by the Contracting Officer. The window blinds must have non-corroding mechanisms and synthetic tapes. Color selection will be made by the Contracting Officer.

DRAPERIES:

Draperies will be provided in all conference rooms and in the following office areas:

U.S. Attorney (Headquarters), Secretary to U.S. Attorney, Chief Assistant to the U.S. Attorney, Secretary to the Chief Assistant to the U.S. Attorney, Special Litigation Counsel, Supervisory Assistant U.S. Attorney (Civil), Supervisory Assistant U.S. Attorney (Criminal), Supervisory Assistant U.S. Attorney (Appellate),Supervisory Assistant U.S. Attorney(Task Force), and Executive Administration Officer. Please refer to the Special Requirements for more information.

Fabrics shall be lined with either white or off-white plain lining fabric suited to the drapery fabric weight. Draperies shall be either floor-, apron-, or sill-length, as specified by the Government, and shall be wide enough to cover window and trim. Draperies shall be hung with drapery hooks on well-anchored heavy duty traverse rods. Traverse rods shall draw from either the center, right or left side.

CONSTRUCTION:

Any draperies to be newly installed, must be made as follows:

- 100 percent fullness, including overlap, side hems, and necessary returns.
- 4-inch double headings turned over a 4-inch permanently finished stiffener.
- 1½-inch doubled side hems; 4-inch doubled and blind stitched bottom hems.

- Three-fold pinch pleats.
- Safety stitched intermediate seams.
- Matched patterns.
- Tacked corners.
- No raw edges or exposed seams.

Use of existing draperies must be approved by the Contracting Officer.

SAMPLES:
A minimum of 7 patterns and colors shall be made available to the Government for selection; shading of sample fabric shall not vary markedly from that of the final product.

5.15. BUILDING DIRECTORY
A tamper proof directory with lock shall be provided in the building lobby listing all Government agencies. It must be acceptable to the Contracting Officer.

5.16. FLAG POLE
If the Government is the sole occupant of the building, a flagpole shall be provided at a location to be approved by the Contracting Officer. The flag will be provided by the Government. This requirement may be waived if determined inappropriate by GSA.

6.0 MECHANICAL, ELECTRICAL, PLUMBING

6.1. MECHANICAL, ELECTRICAL, PLUMBING: GENERAL

The Lessor shall provide and operate all building equipment and systems in accordance with applicable technical publications, manuals, and standard procedures. Mains, lines, and meters for utilities shall be provided by the Lessor. Exposed ducts, piping, and conduits are not permitted in office space.

6.2. DRINKING FOUNTAINS

~~The Lessor shall provide, on each floor of office space, a minimum of one chilled drinking fountain within every 150 feet of travel distance.~~

6.3. TOILET ROOMS (JUL 1994)

(a) ~~Separate toilet facilities for men and women shall be provided on each floor occupied by the Government in the building. The facilities must be located so that employees will not be required to travel more than 200 feet on one floor to reach the toilets. Each toilet room shall have sufficient water closets enclosed with modern stall partitions and doors, urinals (in men's room), and hot (set at 105°F, if practical) and cold water. Water closets and urinals shall not be visible when the exterior door is open.~~

(b) ~~Each main toilet room shall contain the following equipment:~~

(1) ~~A mirror above the lavatory.~~

(2) ~~A toilet paper dispenser in each water closet stall, that will hold at least two rolls and allow easy, unrestricted dispensing.~~

(3) ~~A coat hook on inside face of door to each water closet stall and on several wall locations by lavatories.~~

(4) ~~At least one modern paper towel dispenser, soap dispenser and waste receptacle for every two lavatories.~~

(5) ~~A coin operated sanitary napkin dispenser in women's toilet rooms with waste receptacle for each water closet stall.~~

(6) ~~Ceramic tile or comparable wainscot from the floor to a minimum height of 4 feet 6 inches.~~

(7) ~~A disposable toilet seat cover dispenser.~~

(8) ~~A counter area of at least 2 feet in length, exclusive of the lavatories (however, it may be attached to the lavatories) with a mirror above and a ground fault interrupt type convenience outlet located adjacent to the counter area.~~

(c) ~~See subparagraph (g), titled Toilet Rooms of the Handicapped Accessibility paragraph in Section 4, titled General Architectural.~~

6.4. TOILET ROOMS: FIXTURE SCHEDULE (OCT 1996)

(a) The toilet fixture schedules specified below shall be applied to each full floor based on one person for each 135 BOMA Usable square feet of office space in a ratio of 40 percent men and 60 percent women:

(b) Refer to the schedule separately for each sex.

NUMBER OF MEN*/WOMEN	WATER CLOSETS	LAVATORIES
1 - 15	1	1
16 - 35	2	2
36 - 55	3	3
56 - 60	4	3
61 - 80	4	4
81 - 90	5	4
91 - 110	5	5
111 - 125	6	5
126 - 150	6	**
> 150	***	

* In men's facilities, urinals may be substituted for 1/3 of the water closets specified.

** Add one lavatory for each 45 additional employees over 125.

*** Add one water closet for each 40 additional employees over 150.

(c) For new installations:

(1) Water closets shall not use more than 1.6 gallons per flush.

(2) Urinals shall not use more than 1.0 gallons per flush.

(3) Faucets shall not use more than 2.5 gallons per minute at a flowing water pressure of 80 psi.

6.5. JANITOR CLOSETS

Janitor closets with service sink, hot and cold water, and ample storage for cleaning equipment, materials, and supplies shall be provided on all floors. Janitor closets shall have door(s) fitted with an automatic deadlocking latch bolt with a minimum throw of ½ inch.

6.6. HEATING AND AIR CONDITIONING (JUL 1994)

(a) ~~Temperatures shall conform to local commercial equivalent temperature levels and operating practices in order to maximize tenant satisfaction. These temperatures must be maintained throughout the leased premises and service areas, regardless of outside temperatures, during the hours of operation specified in the lease.~~

(b) ~~During non-working hours, heating temperatures shall be set no higher than 55°F and air conditioning will not be provided except as necessary to return space temperatures to a suitable level for the beginning of working hours. Thermostats shall be secured from manual operation by key or locked cage. A key shall be provided to the GSA Field Office Manager.~~

(c) ~~Simultaneous heating and cooling are not permitted.~~

(d) ~~Areas having excessive heat gain or heat loss, or affected by solar radiation at different times of the day, shall be independently controlled.~~

(e) ~~ZONE CONTROL~~:
~~Individual thermostat control shall be provided for office space with control areas not to exceed 2000 occupiable square feet. Areas which routinely have extended hours of operation shall be environmentally controlled through dedicated heating and air conditioning equipment. Special purpose areas (such as photocopy centers, large conference rooms, computer rooms, etc.) with an internal cooling load in excess of 5 tons shall be independently controlled. Concealed package air-conditioning equipment shall be provided to meet localized spot cooling of tenant special equipment. Portable space heaters are prohibited from use.~~

(f) ~~EQUIPMENT PERFORMANCE~~:
~~Temperature control for office spaces shall be assured by concealed central heating and air-conditioning equipment. The equipment shall maintain space temperature control over a range of internal load fluctuations of plus 0.5 Watt/sq.ft. to minus 1.5 Watts/sq.ft. from initial design requirements of the tenant.~~

6.7. VENTILATION (OCT 1996)

(a) ~~During working hours in periods of heating and cooling, ventilation shall be provided in accordance with ASHRAE Standard 62, Ventilation for Acceptable Indoor Air Quality.~~

(b) ~~Conference rooms of 500 BOMA Usable square feet or greater shall be provided with a dedicated source of ventilation or be fitted with air handling equipment with smoke/odor removing filters.~~

(c) ~~Where the Lessor proposes that the Government should pay utilities:~~

(1) ~~An automatic air or water economizer cycle must be provided to all air handling equipment, where practicable.~~

(2) ~~The building shall have a fully functional building automation system (BAS) capable of control, regulation, and monitoring of all environmental conditioning equipment. The BAS shall be fully supported by a service and maintenance contract.~~

6.8. VENTILATION: TOILET ROOMS (DEC 1993)

Toilet rooms shall be properly exhausted, with a minimum of 10 air changes per hour.

6.9. ELECTRICAL: GENERAL (SEP 1991)

The Lessor shall be responsible for meeting the applicable requirements of local codes and ordinances. When codes conflict, the more stringent standard shall apply. Main service facilities will be enclosed. The enclosure may not be used for storage or other purposes and shall have door(s) fitted with an automatic deadlocking latch bolt with a minimum throw of ½ inch. Distribution panels must be circuit breaker type with 10 percent spare power load and circuits.

6.10. ELECTRICAL: DISTRIBUTION (JUN 1994)

(a) Duplex floor or wall outlets shall be provided as indicated on the Government approved floor plan. Convenience outlets shall be installed on the basis of a maximum of 8 outlets per 20-amp circuit.

(b) Each workstation shall contain at least 1 orange-bodied or other specially designed receptacle with isolated-ground capability. Such receptacles shall not exceed in number 4 per 20-amp. circuit, and shall be installed in accordance with the September 21, 1983 edition of Federal Information Processing Standards pub. 94.

(c) The Lessor shall ensure that electrical outlets and associated wiring are concealed by a method acceptable to the Contracting Officer. Raceways and outlets shall be concealed except when surface-mounting is approved by the Contracting Officer.

(d) At the discretion of the Contracting Officer, stand-alone power poles (or, in the case of systems furniture, systems-furniture power poles) may be used to provide electrical service to work stations.

(e) All floors shall have 120/208-volt, 3-phase, 4-wire with bond, 60-hertz electrical service available. Duplex outlets shall be circuited separately from the lighting. All branch-circuit wiring shall consist of copper conductors. Conductors for branch circuits shall be sized to prevent voltage drop exceeding 3 percent at the farthest receptacle.

6.11. ELECTRICAL: DISTRIBUTION COMBINATION (JUN 1994)

(a) Duplex floor or wall outlets shall be provided as indicated on the Government approved floor plan.

(b) Fourplex (double duplex) floor or wall outlets shall be provided as indicated on the Government approved floor plan.

(c) Convenience outlets shall be installed on the basis of a maximum of 8 outlets per 20-amp. circuit.

(d) Each work station shall contain at least 1 orange-bodied or other similarly designed receptacle with isolated-ground capability. Said receptacles shall not exceed in number 4 per 20-amp. circuit, and shall be installed in accordance with the September 21, 1983, edition of Federal Information Processing Standards pub. 94.

(e) Dedicated special electrical receptacles shall be provided on the basis of 1 per 10,000 occupiable square feet. Duplex outlets corresponding to said receptacles shall be colored differently from the standard duplex and fourplex outlets, and shall be used only for office copiers and special equipment. One dedicated or special electrical outlet shall be provided in space of less than 10,000 occupiable square feet. The Lessor shall ensure that the outlets and associated wiring designated to workstations will be concealed in a manner acceptable to the Contracting Officer. Cable shall not be exposed on the finished floor surface.

(f) All floors shall have 120/208-volt, 3-phase, 4-wire with bond, 60-hertz electric service available. Duplex outlets shall be circuited separately from the lighting. All branch-circuit wiring shall consist of copper conductors. Conductors for branch circuits shall be sized to prevent voltage drop exceeding 3 percent at the farthest receptacle.

(g) At the discretion of the Contracting Officer, stand-alone power poles (or, in the case of systems furniture, systems-furniture power poles) may be offered in lieu of electrical and telephone floor outlets. Where power poles are substituted for floor outlets, each power pole shall consist of two duplex electric outlets and two telephone outlets. For the purposes of determining unit costs for

adjustment, Offerors are required to [illegible]te, either in their offer or in an attachment, the c[illegible] wiring and installation for each power pole, both as a stand-alone and as furnished by others with systems furniture.

6.12. ELECTRICAL: ADDITIONAL DISTRIBUTION SPECIFICATIONS

If the Offeror proposes that building maintenance will be the responsibility of the Government, the Lessor shall provide duplex utility outlets in toilets, corridors, and dispensing areas for maintenance purposes at no cost to the Government. Fuses and circuit breakers shall be plainly marked or labeled to identify circuits or equipment supplied through them.

6.13. TELEPHONE: DISTRIBUTION AND EQUIPMENT (JUN 1994)

(a) Telephone floor or wall outlets shall be provided as indicated on the Government approved floor plan. The Lessor shall ensure that all outlets and associated wiring used to transmit telecommunication (voice) service to the workstation will be safely concealed in floor ducts, walls, or columns. Wall outlets shall be provided with rings and pull strings to facilitate the installation of cable.

(b) The Government reserves the right to provide its own telecommunication (voice) service in the space to be leased. The Government may contract with another party to have inside wiring and telephone equipment installed. Telecommunication switchrooms, wire closets, and related spaces shall be enclosed. The enclosure shall not be used for storage or other purposes and shall have door(s) fitted with an automatic deadlocking latch bolt with a minimum throw of ½ inch.

6.14. DATA DISTRIBUTION (JUN 1994)

Floor or wall outlets shall be provided as indicated on the Government approved floor plant. The Lessor shall ensure that data outlets and the associated wiring used to transmit data to workstations will be safely concealed in floor ducts, walls, columns, or below access flooring. Wall-mounted outlets shall be provided with rings and pull strings to facilitate the installation of the data cable. The Government shall at its expense be responsible for purchasing and installing said cable. When cable consists of multiple runs, the Lessor shall provide cable trays to insure that Government-provided cable does not come into contact with suspended ceilings. Cable trays shall be ladder-type, and shall form a loop around the perimeter of the Government-occupied space such that the horizontal distance between individual drops does not exceed 30 feet.

6.15. ELECTRICAL, TELEPHONE, DATA FOR SYSTEMS FURNITURE (JUN 1994)

(a) The Lessor shall provide separate data, telephone, and electric junction boxes for the base feed connections to Government-provided modular or systems furniture, when such feeds are supplied via wall outlets or floor penetrations. When overhead feeds are used, junction boxes shall be installed for electrical connections. Raceways will be provided throughout the furniture panels to distribute the electrical, telephone, and data cable. The Lessor shall provide all electrical service wiring and connections to the furniture at designated junction points. Cluster groups at floor or wall locations shall be provided as shown on the Government approved floor plan. A set consisting of 1 data junction box, 1 telephone junction box, and 1 electrical junction box shall comprise a cluster group. Each electrical junction shall contain an 8-wire feed consisting of 3 general-purpose 120-volt circuits with 1 neutral and 1 ground wire, and a 120-volt isolated-ground circuit with 1 neutral and 1 isolated-ground wire. A 20-amp. circuit shall have no more than 8 general-purpose receptacles or 4 isolated-ground "computer" receptacles. The isolated-ground "computer" circuits shall be installed in accordance with the September 21, 1983 edition of Federal Information Processing Standards pub. 94.

(b) The Government shall be responsible for providing data and telecommunications cable. Said cable shall be installed and connected to systems furniture by the Lessor/contractor with the assistance and/or advice of the Government or computer vendor. The Lessor shall provide wall-mounted data and telephone junction boxes, which shall include rings and pull strings designed to facilitate the installation of cable. The Lessor shall provide a means of distributing the cable via a system of ladder-type cable trays which shall form a loop around the perimeter of the Government-occupied space. Said ladder trays shall provide access to both telecommunications data closets and telephone closets, and shall be located such that they are within a 30-foot horizontal distance of any single drop.

6.16. LIGHTING: INTERIOR. (JUN 1994)

(a) ~~Modern low brightness, parabolic type 2' x 4' or 2' x 2' fluorescent fixtures using no more than 2.0 watts/occupiable square foot shall be provided. Such fixtures shall be capable of producing and maintaining a uniform lighting level of 50 foot-candles at working surface height throughout the space. A lighting level of at least 20 foot-candles at foot level should be maintained in corridors providing ingress and egress to the Government leased space. One to 10 foot-candles or minimum levels sufficient to ensure safety should be maintained in other non-working areas. When the space is not in use by the Government, interior and exterior lighting, except that essential for safety and security purposes, shall be turned off.~~

(b) ~~Building entrances and parking areas must be lighted. Ballasts are to be rapid start, thermally protected, voltage regulating type, UL listed and ETL approved.~~

(c) ~~Outdoor parking areas shall have a minimum of 1 foot-candle of illumination. Indoor parking areas shall have a minimum of 10 foot-candles level illumination.~~

6.17. SWITCHES (JUN 1994)

Switches shall be located on columns or [illegible] by door openings in accordance with the "Cont[illegible] subparagraph of the paragraph entitled "Handicapped Accessibility" in the "General Architectural" section of this solicitation. [illegible]o more than 1000 occupiable square feet of open space shall be controlled by one light switch.

6.18. ELEVATORS (OCT 1996)

(a) The Lessor shall provide suitable passenger and freight elevator service to all GSA-leased space not having ground level access. Service shall be available during the hours specified in the paragraph entitled "Normal Hours" in the "Services, Utilities, Maintenance" section of this solicitation.

(b) CODE:
Elevators shall conform to the current editions of the American National Standard A17.1, Safety Code for Elevators and Escalators, except that elevator cabs are not required to have a visual or audible signal to notify passengers during automatic recall. The elevator shall be inspected and maintained in accordance with the current requirements of the American National Standard A17.2, Inspector's Manual for Elevators.

7.0 SERVICES, UTILITIES, MAINTENANCE

7.1. SERVICES, UTILITIES, MAINTENANCE: GENERAL

The Lessor must have a building superintendent or a locally designated representative available to promptly correct deficiencies.

7.2. NORMAL HOURS

Services, utilities, and maintenance will be provided daily, extending 7:00 a.m. through 6:00 p.m. except Saturdays, Sundays, and Federal holidays.

7.3. OVERTIME USAGE (JUN 1993)

(a) The Government shall have access to the leased space at all times, including the use of elevators, toilets, lights, and small business machines without additional payment.

(b) If heating or cooling is required on an overtime basis, such services will be ordered orally or in writing by the Contracting Officer or Buildings Manager. When ordered, services shall be provided at the hourly rate negotiated prior to award. Costs for personal services shall only be included as authorized by the Government.

(c) When the cost of service is $2,000 or less, the service may be ordered orally. An invoice shall be submitted to the official placing the order for certification and payment. Orders for services costing more than $2,000 will be placed using a Form 300, Order for Supplies or Services. The clauses entitled "GSAR 552.232-71 Prompt Payment (APR 1989)" and "GSAR 552.232-72 Invoice Requirements (Variation) (APR 1989)" on the GSA Form 3517, General Clauses, apply to all orders for overtime services.

(d) All orders are subject to the terms and conditions of this lease. In the event of a conflict between an order and this lease, the lease shall control.

7.4. UTILITIES

~~The Lessor shall ensure that utilities necessary for operation are provided and all associated costs are included as a part of the established rental rate.~~

7.5. MAINTENANCE AND TESTING OF SYSTEMS (OCT 1996)

(a) The Lessor is responsible for the total maintenance and repair of the leased premises. Such maintenance and repairs include site and private access roads. All equipment and systems shall be maintained to provide reliable, energy efficient service without unusual interruption, disturbing noises, exposure to fire or safety hazards, uncomfortable drafts, excessive air velocities, or unusual emissions of dirt. The Lessor's maintenance responsibility includes initial supply and replacement of all supplies, materials, and equipment necessary for such maintenance. Maintenance, testing, and inspection of appropriate equipment and systems must be done in accordance with applicable codes, and inspection certificates must be displayed as appropriate. Copies of all records in this regard shall be forwarded to the Field Office Manager or a designated representative.

(b) Without any additional charge, the Government reserves the right to require documentation of proper operations or testing prior to occupancy of such systems as fire alarm, sprinkler, emergency generator, etc. to ensure proper operation. These tests shall be witnessed by a representative of the Contracting Officer.

7.6. FLAG DISPLAY

The Lessor shall be responsible for flag display on all workdays and federal holidays. The Government will provide instructions when flags must be flown at half-staff.

7.7. SECURITY

The Lessor shall provide a level of security which reasonably deters unauthorized entry to the space leased during non-duty hours and deters loitering or disruptive acts in and around the space leased during duty hours.

7.8. SECURITY: ADDITIONAL REQUIREMENTS

The Government reserves the right to require the Lessor to submit completed fingerprint charts and personal history statements for each employee of the Lessor as well as employees of the Lessor's contractor's or subcontractors who will provide building operating services of a continuing nature for the property in which the leased space is located. The Government may also require this information for employees of the Lessor, his contractors, or subcontractors who will be engaged to perform alterations or emergency repairs for the property.

If required, the Contracting Officer will furnish the Lessor with form FD-258, "Fingerprint Chart" and Form 176, "Statement of Personal History" to be completed for each employee and returned by the Lessor to the Contracting Officer or his designated representative within 10 working days from the date of the written request to do so. Based on the information furnished, the Government will conduct security checks of the employees. The Contracting Officer will advise the Lessor in writing if an employee is found to be unsuitable or

unfit for his assigned duties. Effective immediately, such an employee cannot work or be assigned to work on the property in which the leased space is located. The Lessor will be required to provide the same data within 10 working days from the addition of new employee(s) to the work force. In the event the Lessor's contractor/subcontractor is subsequently replaced, the new contractor/subcontractor is not required to submit another set of these forms for employees who were cleared through this process while employed by the former contractor/subcontractor. The Contracting Officer may require the Lessor to submit Form FD-258 and Form 176 for every employee covered by this clause on a 3-year basis.

7.9. JANITORIAL SERVICES

~~Cleaning is to be performed during daytime working hours~~.

~~The Lessor shall maintain the leased premises, including outside areas in a clean condition and shall provide supplies and equipment. The following schedule describes the level of services intended. Performance will be based on the Contracting Officer's evaluation of results, not the frequency or method of performance.~~

~~DAILY~~:
~~Empty trash receptacles and clean ashtrays. Sweep entrances, lobbies and corridors. Spot sweep floors and spot vacuum carpets. Clean drinking fountains. Sweep and damp mop or scrub toilet rooms. Clean all toilet fixtures and replenish toilet supplies. Dispose of all trash and garbage generated in or about the building. Wash inside and out or steam clean cans used for collection of food remnants from snack bars and vending machines. Dust horizontal surfaces that are readily available and visibly require dusting. Spray buff resilient floors in main corridors, entrances and lobbies, clean elevators and escalators, remove carpet stains. Police sidewalks, parking areas and driveways. Sweep loading dock areas and platforms.~~

~~THREE TIMES A WEEK~~:
~~Sweep or vacuum stairs.~~

~~WEEKLY~~:
~~Damp mop and spray buff all resilient floors in toilets and health units. Sweep sidewalks, parking areas and driveways (weather permitting).~~

~~EVERY TWO WEEKS~~:
~~Spray buff resilient floors in secondary corridors, entrance and lobbies. Damp mop and spray buff hard and resilient floors in office space.~~

MONTHLY:
~~Thoroughly dust furniture. Completely sweep and/or vacuum carpets. Sweep storage space. Spot clean all wall surfaces within 70 inches of the floor.~~

~~EVERY TWO MONTHS~~:
~~Damp wipe toilet wastepaper receptacles, stall partitions, doors, window sills and frames. Shampoo entrance and elevator carpets.~~

~~THREE TIMES A YEAR~~:
~~Dust wall surfaces within 70 inches of the floor, vertical surfaces and under surfaces. Clean metal and marble surfaces in lobbies. Wet mop or scrub garages.~~

~~TWICE A YEAR~~:
~~Wash all interior and exterior windows and other glass surfaces. Strip and apply four coats of finish to resilient floors in toilets. Strip and refinish main corridors and other heavy traffic areas.~~

~~ANNUALLY~~:
~~Wash all venetian blinds and dust 6 months from washing. Vacuum or dust all surfaces in the building of 70 inches from the floor, including light fixtures. Vacuum all drapes in place. Strip and refinish floors in offices and secondary lobbies and corridors. Shampoo carpets in corridors and lobbies. Clean balconies, ledges, courts, areaways and flat roofs.~~

~~EVERY TWO YEARS~~:
~~Shampoo carpets in all offices and other non-public areas.~~

~~EVERY FIVE YEARS~~:
~~Dry clean or wash (as appropriate) all drapes.~~

~~AS REQUIRED~~:
~~Properly maintain plants and lawns, remove snow and ice from entrances, exterior walks and parking lots of the building. Provide initial supply, installation and replacement of light bulbs, tubes, ballasts and starters. Replace worn floor coverings (this includes moving and return of furniture). Exterminate pests.~~

7.10. SCHEDULE OF PERIODIC SERVICES

Within 60 days after occupancy by the Government, the Lessor shall provide the Contracting Officer with a detailed written schedule of all periodic services and maintenance to be performed other than daily, weekly or monthly.

7.11. LANDSCAPE MAINTENANCE

Performance will be based on the Contracting Officer's evaluation of results and not the frequency or the method of performance. Landscape maintenance is to be performed during the growing season on a weekly cycle and will consist of watering, mowing, and policing area to keep it free of debris. Pruning and fertilization are to be done on an as needed basis. In addition, dead or dying plants are to be replaced.

8.0 SAFETY AND ENVIRONMENTAL MANAGEMENT

8.1. OCCUPANCY PERMIT (OCT 1996)

The Lessor shall provide a valid Occupancy Permit for the intended use of the Government and shall maintain and operate the building in conformance with current local codes and ordinances. If the local jurisdiction does not issue occupancy permits, Offerors should consult the contracting officer to determine if other documentation may be needed.

8.2. FIRE AND LIFE SAFETY (OCT 1996)

(a) Below-grade space to be occupied by Government and all areas in a building referred to as "hazardous areas" in National Fire Protection Association Standard 101, known as the "Life Safety Code," or any successor standard thereto, must be protected by an automatic sprinkler system or an equivalent level of safety.

(b) If offered space is 3 stories or more above grade, the Lessor shall provide written documentation that the building meets egress and fire alarm requirements as established by NFPA Standard No. 101 or equivalent. However, if 1) offered space is 5 stories or less above grade, 2) the total Government leased space in the building (all leases combined) will be less than 35,000 square feet, and 3) the building is sprinklered, this documentation is not required.

(c) If offered space is 6 stories or more above grade, additional fire and life safety requirements may apply. Therefore, the offeror must advise GSA in its offer whether or not the offered space, or any part thereof, is on or above the sixth floor of the offered building.

8.3. MANUAL FIRE ALARM SYSTEMS (OCT 1996)

Manual fire alarm systems shall be provided in accordance with NFPA Standard 101 (current as of the date of this solicitation). Systems shall be maintained and tested by the Lessor in accordance with NFPA Standard 72. The fire alarm system wiring and equipment must be electrically supervised and automatically notify the local fire department (NFPA Standard No. 72) or approved central station. Emergency power must be provided in accordance with NFPA Standards No. 70 and 72.

8.4. OSHA REQUIREMENTS (OCT 1996)

The Lessor shall maintain buildings and space in a safe and healthful condition according to the Occupational Safety and Health Administration (OSHA) standards.

8.5. ASBESTOS (OCT 1996)

The leased space shall be free of all asbestos containing materials, except undamaged asbestos flooring in the space or undamaged boiler or pipe insulation outside the space, in which case an asbestos management program conforming to Environmental Protection Agency guidance shall be implemented.

8.6. INDOOR AIR QUALITY (OCT 1996)

~~(a) The Lessor shall control contaminants at the source and/or operate the space in such a manner that the GSA indicator levels for carbon monoxide (CO), carbon dioxide (CO_2), and formaldehyde (HCHO) are not exceeded. The indicator levels for office areas shall be: CO - 9 parts per million (ppm) time-weighted average (TWA - 8 hour sample); CO_2 - 1000 ppm (TWA); formaldehyde - 0.1 ppm (TWA).~~

(b) ~~The Lessor shall make a reasonable attempt to apply insecticides (except traps), paints, glues, adhesives, and heating, ventilating and air conditioning (HVAC) system cleaning compounds with highly volatile or irritating organic compounds, outside of working hours. The Lessor shall provide advance notice to the tenant before applying noxious chemicals in occupied spaces, and adequate ventilation in those spaces during working hours during and after application.~~

(c) ~~The Lessor shall, at all times, supply adequate ventilation to the leased premises with air having contaminants below OSHA or EPA action levels and permissible exposure limits, and without noxious odors or dusts. The Lessor shall conduct HVAC system balancing after all HVAC system alterations; and make a reasonable attempt to schedule major construction outside of office hours.~~

(d) ~~The Lessor shall promptly investigate indoor air quality (IAQ) complaints and shall implement controls, including alteration of building operating procedures (e.g., adjusting air intakes, adjusting air distribution, cleaning and maintaining HVAC systems, etc.), to address such complaints.~~

(e) ~~The Government reserves the right to conduct independent IAQ assessments and detailed studies in space it occupies, as well as in space serving the Government-leased space (e.g., common use areas, mechanical rooms, HVAC systems, etc.). The Lessor shall assist the Government in its assessments and detailed studies by making available information on building operations and Lessor activities, and providing access to space for assessment and testing, if required, and implement corrective measures required by the Contracting Officer.~~

8.7. RADON IN AIR (OCT 1996)

If space planned for occupancy by the Government is on the second floor above grade or lower, the Lessor shall, prior to occupancy, test the leased space for 2-3 days using charcoal cannisters or Electret Ion Chambers to ensure radon in air levels are below the

Environmental Protection Agency's action concentration of 4 picoCuries/liter. After the initial testing, a followup test for a minimum of 90 days using Alpha Track Detectors or Electret Ion Chambers must be completed.

8.8. RADON IN WATER (SEP 1991)

(a) ~~Two water samples constituting a sampling pair shall be taken from the same location for quality control. They shall be obtained inside the building and as near the non-public water source as is practical, in accordance with EPA's "Radon In Water Sampling Program Manual." Analysis of water samples for radon must be performed by a laboratory that uses the analytical procedures as described in EPA's "Two Test Procedures For Radon In Drinking Water."~~

(b) ~~The Lessor shall perform the necessary radon testing and submit a certification to the Contracting Officer before the Government occupies the space.~~

(c) ~~If the EPA action level is reached or exceeded, the Lessor shall institute abatement methods, such as aeration, which reduce the radon to below the EPA action level prior to occupancy by the Government, and are promptly revised when building conditions which would or do affect the program change.~~

8.9. HAZARDOUS MATERIALS (OCT 1996)

The leased space shall be free of hazardous materials according to applicable Federal, State, and local environmental regulations.

8.10. RECYCLING (OCT 1996)

Where State and/or local law, code or ordinance require recycling programs for the space to be provided pursuant to this solicitation, the successful offeror shall comply with such State and/or local law, code or ordinance in accordance with the paragraph of the General Clauses entitled "Compliance with Applicable Law." In all other cases, the successful offeror shall establish a recycling program in the leased space where local markets for recovered materials exist. The Lessor agrees, upon request, to provide the Government with additional information concerning recycling programs maintained in the building and the leased space.

9.0 SPECIAL REQUIREMENTS

Please refer to the following 57 pages.

(b) (5)

(b) (5)

(b) (5)

(b) (5)

(b) (5)

(b) (5)

(b) (5)

(b) (5)

(b) (5)

(b) (5)

(b) (5)

(b) (5)

(b) (5)

(b) (5)

(b) (5)

(b) (5)

(b) (5)

(b) (5)

(b) (5)

(b) (5)

(b) (5)

(b) (5)

(b) (5)

(b) (5)

(b) (5)

(b) (5)

(b) (5)

(b) (5)

(b) (5)

(b) (5)

(b) (5)

(b) (5)

(b) (5)

(b) (5)

(b) (5)

(b) (5)

(b) (5)

(b) (5)

(b) (5)

(b) (5)

(b) (5)

(b) (5)

(b) (5)

(b) (5)

(b) (5)

(b) (5)

(b) (5)

(b) (5)

(b) (5)

(b) (5)

(b) (5)

(b) (5)

(b) (5)

(b) (5)

(b) (5)

(b) (5)

(b) (5)

(b) (5)

(b) (5)

(b) (5)

(b) (5)

(b) (5)

(b) (5)

(b) (5)

(b) (5)

(b) (5)

(b) (5)

(b) (5)

(b) (5)

(b) (5)

(b) (5)

(b) (5)

(b) (5)

(b) (5)

(b) (5)

(b) (5)

(b) (5)

(b) (5)

(b) (5)

(b) (5)

(b) (5)

(b) (5)

(b) (5)

(b) (5)

(b) (5)

(b) (5)

(b) (5)

(b) (5)

(b) (5)

(b) (5)

(b) (5)

(b) (5)

(b) (5)

(b) (5)

(b) (5)

(b) (5)

(b) (5)

(b) (5)

(b) (5)

(b) (5)

(b) (5)

(b) (5)

(b) (5)

(b) (5)

(b) (5)

(b) (5)

(b) (5)

GENERAL CLAUSES
(Acquisition of Leasehold Interests in Real Property)

CATEGORY	Clause No.	48 CFR Ref.	Clause Title
DEFINITIONS GENERAL	1	552.270-10	Definitions
	2	552.270-11	Subletting and Assignment
	3	552.270-18	Successors Bound
	4	552.270-34	Subordination, Nondisturbance and Attornment
	5	552.270-35	Statement of Lease
	6	552.270-36	Substitution of Tenant Agency
	7	552.270-37	No Waiver
	8	552.270-38	Integrated Agreement
	9	552.270-39	Mutuality of Obligation
PERFORMANCE	10	552.270-27	Delivery and Condition
	11	552.270-28	Default in Delivery - Time Extensions
	12	552.270-30	Progressive Occupancy
	13	552.270-32	Effect of Acceptance and Occupancy
	14	552.270-12	Maintenance of Building and Premises-Right of Entry
	15	552.270-17	Failure in Performance
	16	552.270-33	Default by Lessor During the Term
	17	552.270-13	Fire and Casualty Damage
	18	552.270-15	Compliance with Applicable Law
	19	552.270-19	Alterations
	20	552.270-41	Acceptance of Space
INSPECTION	21	552.270-16	Inspection-Right of Entry
PAYMENT	22	552.232-71	Prompt Payment
	23	552.232-73	Electronic Funds Transfer Payment
	24	552.232-72	Invoice Requirements
	25	52.232-23	Assignment of Claims
	26	552.270-31	Payment
STANDARDS OF CONDUCT	27	552.203-5	Covenant Against Contingent Fees
	28	52.203-7	Anti-Kickback Procedures
	29	52.203-9	Requirement for Certificate of Procurement Integrity-Modification
ADJUSTMENTS	30	552.203-73	Price Adjustment for Illegal or Improper Activity
	31	52.215-22	Price Reduction for Defective Cost or Pricing Data
	32	552.270-20	Proposals for Adjustment
	33	552.270-21	Changes
AUDITS	34	552.215-70	Examination of Records
DISPUTES	35	52.233-1	Disputes
ENVIRONMENTAL PROTECTION	36	552.270-40	Asbestos and Hazardous Waste Management

INITIALS: _____ & _____
LESSOR GOVERNMENT

LABOR STANDARDS	37	52.222-26	Equal Opportunity
	38	52.222-35	Affirmative Action for Special Disabled and Vietnam Era Veterans
	39	52.222-36	Affirmative Action for Handicapped Workers
	40	52.222-37	Employment Reports on Special Disabled Veterans and Veterans of the Vietnam Era
SUBCONTRACTING	41	52.209-6	Protecting the Government's Interest When Subcontracting With Contractors Debarred, Suspended, or Proposed for Debarment
	42	52.215-24	Subcontractor Cost or Pricing Data
	43	52.219-8	Utilization of Small, Small Disadvantaged and Women-Owned Small Business Concerns
	44	52.219-9	Small, Small Disadvantaged and Women-Owned Small Business Subcontracting Plan
	45	52.219-16	Liquidated Damages- Subcontracting Plan

GENERAL CLAUSES
(Acquisition of Leasehold Interests in Real Property)

1. 552.270-10 - DEFINITIONS (AUG 1992)

The following terms and phrases (except as otherwise expressly provided or unless the context otherwise requires) for all purposes of this lease shall have the respective meanings hereinafter specified:

(a) "Commencement Date" means the first day of the term.

(b) "Contract" and "Contractor" means "Lease" and "Lessor," respectively.

(c) "Contracting Officer" means a person with the authority to enter into, administer, and/or terminate contracts and make related determinations and findings. The term includes certain authorized representatives of the Contracting Officer acting within the limits of their authority as delegated by the Contracting Officer.

(d) "Delivery Date" means the date specified in or determined pursuant to the provisions of this lease for delivery of the premises to the Government, improved in accordance with the provisions of this lease and substantially complete, as such date may be modified in accordance with the provisions of this lease.

(e) "Delivery Time" means the number of days provided by this lease for delivery of the premises to the Government, as such number may be modified in accordance with the provisions of this lease.

(f) "Excusable Delays" mean delays arising without the fault or negligence of Lessor and Lessor's subcontractors and suppliers at any tier, and shall include, without limitation, (1) acts of God or of the public enemy, (2) acts of the United States of America in either its sovereign or contractual capacity, (3) acts of another contractor in the performance of a contract with the Government, (4) fires, (5) floods, (6) epidemics, (7) quarantine restrictions, (8) strikes, (9) freight embargoes, (10) unusually severe weather, or (11) delays of subcontractors or suppliers at any tier arising from unforeseeable causes beyond the control and without the fault or negligence of both the Lessor and any such subcontractor or supplier.

(g) "Lessor" means the sub-lessor if this lease is a sublease.

(h) "Lessor shall provide" means the Lessor shall furnish and install at Lessor's expense.

(i) "Notice" means written notice sent by certified or registered mail, Express Mail or comparable service, or delivered by hand. Notice shall be effective on the date delivery is accepted or refused.

(j) "Premises" means the space described on the Standard Form 2, U.S. Government Lease for Real Property, of this lease.

(k) "Substantially complete" and "substantial completion" means that the work, the common and other areas of the building, and all other things necessary for the Government's access to the premises and occupancy, possession, use and enjoyment thereof, as provided in this lease, have been completed or obtained, excepting only such minor matters as do not interfere with or materially diminish such access, occupancy, possession, use or enjoyment.

(l) "Work" means all alterations, improvements, modifications, and other things required for the preparation or continued occupancy of the premises by the Government as specified in this lease.

2. 552.270-11 - SUBLETTING AND ASSIGNMENT (AUG 1992)

The Government may sublet any part of the premises but shall not be relieved from any obligations under this lease by reason of any such subletting. The Government may at any time assign this lease, and be relieved from all obligations to Lessor under this lease excepting only unpaid rent and other liabilities, if any, that have accrued to the date of said assignment. Any assignment shall be subject to prior written consent of Lessor, which shall not be unreasonably withheld.

3. 552.270-18 - SUCCESSORS BOUND (AUG 1992)

This lease shall bind, and inure to the benefit of, the parties and their respective heirs, executors, administrators, successors, and assigns.

4. 552.270-34 - SUBORDINATION, NONDISTURBANCE AND ATTORNMENT (AUG 1992)

(a) Lessor warrants that it holds such title to or other interest in the premises and other property as is necessary to the Government's access to the premises and full use and enjoyment thereof in accordance with the provisions of this lease. Government agrees, in consideration of the warranties and conditions set forth in this clause, that this lease is subject and subordinate to any and all recorded mortgages, deeds of trust and other liens now or hereafter existing or imposed upon the premises, and to any renewal, modification or extension thereof. It is the intention of the parties that this provision shall be self-operative and that no further instrument shall be required to effect the present or subsequent subordination of this lease. Government agrees, however, within twenty (20) business days next following the Contracting Officer's receipt of a written demand, to execute such instruments as Lessor may reasonably request to evidence further the subordination of this lease to any existing or future mortgage, deed of trust or other security interest pertaining to the premises, and to any water, sewer or access easement necessary or desirable to serve the premises or adjoining property owned in whole or in part by Lessor if such easement does not interfere with the full enjoyment of any right granted the Government under this lease.

(b) No such subordination, to either existing or future mortgages, deeds of trust or other lien or security instrument shall operate to affect adversely any right of the Government under this lease so long as the Government is not in default under this lease. Lessor will include in any future mortgage, deed of trust or other security instrument to which this lease becomes subordinate, or in a separate nondisturbance agreement, a provision to the foregoing effect. Lessor warrants that the holders of all notes or other obligations secured by existing mortgages, deeds of trust or other security instruments have consented to the provisions of this clause, and agrees to provide true copies of all such consents to the Contracting Officer promptly upon demand.

(c) In the event of any sale of the premises or any portion thereof by foreclosure of the lien of any such mortgage, deed of trust or other security instrument, or the giving of a deed in lieu of foreclosure, the Government will be deemed to have attorned to any purchaser, purchasers, transferee or transferees of the premises or any portion thereof and its or their successors and assigns, and any such purchasers and transferees will be deemed to have assumed all obligations of the Lessor under this lease, so as to establish direct privity of estate and contract between Government and such purchasers or transferees, with the same force, effect and relative priority in time and right as if the lease had initially been entered into between such purchasers or transferees and the Government; provided, further, that the Contracting Officer and such purchasers or transferees shall, with reasonable promptness following any such sale or deed delivery in lieu of foreclosure, execute all such revisions to this lease, or other writings, as shall be necessary to document the foregoing relationship.

(d) None of the foregoing provisions may be deemed or construed to imply a waiver of the Government's rights as a sovereign.

5. 552.270-35 - STATEMENT OF LEASE (AUG 1992)

(a) The Contracting Officer will, within thirty (30) days next following the Contracting Officer's receipt of a joint written request from Lessor and a prospective lender or purchaser of the building, execute and deliver to Lessor a letter stating that the same is issued subject to the conditions stated in this clause and, if such is the case, that (1) the lease is in full force and effect; (2) the date to which the rent and other charges have been paid in advance, if any; and (3) whether any notice of default has been issued.

(b) Letters issued pursuant to this clause are subject to the following conditions:

(1) That they are based solely upon a reasonably diligent review of the Contracting Officer's lease file as of the date of issuance;
(2) That the Government shall not be held liable because of any defect in or condition of the premises or building;
(3) That the Contracting Officer does not warrant or represent that the premises or building comply with applicable Federal, State and local law; and
(4) That the Lessor, and each prospective lender and purchaser are deemed to have constructive notice of such facts as would be ascertainable by reasonable prepurchase and precommitment inspection of the Premises and Building and by inquiry to appropriate Federal, State and local Government officials.

6. 552.270-36 - SUBSTITUTION OF TENANT AGENCY (AUG 1992)

The Government may, at any time and from time to time, substitute any Government agency or agencies for the Government agency or agencies, if any, named in the lease.

7. 552.270-37 - NO WAIVER (AUG 1992)

No failure by either party to insist upon the strict performance of any provision of this lease or to exercise any right or remedy consequent upon a breach thereof, and no acceptance of full or partial rent or other performance by either party during the continuance of any such breach shall constitute a waiver of any such breach of such provision.

8. 552.270-38 - INTEGRATED AGREEMENT (AUG 1992)

This Lease, upon execution, contains the entire agreement of the parties and no prior written or oral agreement, express or implied, shall be admissible to contradict the provisions of the Lease.

9. 552.270-39 - MUTUALITY OF OBLIGATION (AUG 1992)

The obligations and covenants of the Lessor, and the Government's obligation to pay rent and other Government obligations and covenants, arising under or related to this Lease, are interdependent. The Government may, upon issuance of and delivery to Lessor of a final decision asserting a claim against Lessor, set off such claim, in whole or in part, as against any payment or payments then or thereafter due the Lessor under this lease. No setoff pursuant to this clause shall constitute a breach by the Government of this lease.

10. 552.270-27 - DELIVERY AND CONDITION (AUG 1992)

~~(a) Unless the Government elects to have the space occupied in increments, the space must be delivered ready for occupancy as a complete unit. The Government reserves the right to determine when the space is substantially complete.~~

~~(b) If the premises do not in every respect comply with the provisions of this lease the Contracting Officer may, in accordance with the Failure in Performance clause of this lease, elect to reduce the rent payments.~~

11. 552.270-28 - DEFAULT IN DELIVERY - TIME EXTENSIONS (JUNE 1994)

(a) ~~With respect to Lessor's obligation to deliver the premises substantially complete by the delivery date (as such date may be modified pursuant to this lease), time is of the essence. If the Lessor fails to prosecute the work with the diligence that will insure its substantial completion by the delivery date or fails to substantially complete the work by such date, the Government may by notice to the Lessor terminate this lease, which termination shall be effective when received by Lessor. The Lessor and the Lessor's sureties, if any, shall be jointly and severally liable for any damages to the Government resulting from such termination, as provided in this clause. The Government shall be entitled to the following damages:~~

(1) ~~The Government's aggregate rent and estimated real estate tax and operating cost adjustments for the firm term and all option terms of its replacement lease or leases, in excess of the aggregate rent and estimated real estate tax and operating cost adjustments for the term; provided, if the Government procures replacement premises for a term (including all option terms) in excess of the term, the Lessor shall not be liable for excess Government rent or adjustments during such excess part of such term;~~

(2) ~~All administrative and other costs borne by the Government in procuring a replacement lease or leases;~~

(3) ~~Such other, additional relief as may be provided for in this lease, at law or in equity.~~

(4) ~~Damages to which the Government may be entitled under this clause shall be due and payable thirty (30) days next following the date Lessor receives notice from the Contracting Officer specifying such damages.~~

(b) ~~Delivery by Lessor of less than the minimum occupiable square footage required by this lease shall in no event be construed as substantial completion, except as permitted by the Contracting Officer.~~

(c) ~~Notwithstanding paragraph (a) of this clause, this lease shall not be terminated under this clause nor the Lessor charged with damages under this clause, if (1) the delay in substantially completing the work arises from excusable delays and (2) the Lessor within 10 days from the beginning of any such delay (unless extended in writing by the Contracting~~

~~Officer) provides notice to the Contracting Officer of the causes of delay. The Contracting Officer shall ascertain the facts and the extent of delay. If the facts warrant such action, the delivery date shall be extended, by the Contracting Officer, to the extent of such delay at no additional costs to the Government. A time extension is the sole remedy of the Lessor~~.

12. ~~552.270-30 - PROGRESSIVE OCCUPANCY (AUG 1992)~~

~~The Government shall have the right to elect to occupy the space in partial increments prior to the substantial completion of the entire leased premises, and the Lessor agrees to schedule its work so as to deliver the space incrementally as elected by the Government. The Government shall pay rent commencing with the first business day following substantial completion of the entire leased premise unless the Government has elected to occupy the leased premises incrementally. In case of incremental occupancy, the Government shall pay rent pro rata upon the first business day following substantial completion of each incremental unit. Rental payments shall become due on the first workday of the month following the month in which an increment of space is substantially complete, except that should an increment of space be substantially completed after the fifteenth day of the month, the payment due date will be the first workday of the second month following the month in which it was substantially complete. The commencement date of the firm lease term will be a composite determined from all rent commencement dates~~.

13. 552.270-32 - EFFECT OF ACCEPTANCE AND OCCUPANCY (AUG 1992)

Neither the Government's acceptance of the premises for occupancy, nor the Government's occupancy thereof, shall be construed as a waiver of any requirement of or right of the Government under this Lease, or as otherwise prejudicing the Government with respect to any such requirement or right.

14. 552.270-12 - MAINTENANCE OF BUILDING AND PREMISES - RIGHT OF ENTRY (AUG 1992)

Except in case of damage arising out of the willful act or negligence of a Government employee, Lessor shall maintain the premises, including the building and all equipment, fixtures, and appurtenances furnished by the lessor under this lease, in good repair and condition so that they are suitable in appearance and capable of supplying such heat, air conditioning, light, ventilation, access and other things to the premises, without reasonably preventable or recurring disruption, as is required for the Government's access to, occupancy, possession, use and enjoyment of the premises as provided in this lease. For the purpose of so maintaining the premises, the Lessor may at reasonable times enter the premises with the approval of the authorized Government representative in charge.

15. 552.270-17 - FAILURE IN PERFORMANCE (AUG 1992)

The covenant to pay rent and the covenant to provide any service, utility, maintenance, or repair required under this lease are interdependent. In the event of any failure by the Lessor to provide any service, utility, maintenance, repair or replacement required under this lease the Government may, by contract or otherwise, perform the requirement and deduct from any payment or payments under this lease, then or thereafter due, the resulting cost to the Government, including all administrative costs. If the Government elects to perform any such requirement, the Government and each of its contractors shall be entitled to access to any and all areas of the building, access to which is necessary to perform any such requirement, and the Lessor shall afford and facilitate such access. Alternatively, the Government may deduct from any payments under this lease, then or thereafter due, an amount which reflects the reduced value of the contract requirement not performed. No deduction from rent pursuant to this clause shall constitute a default by the Government under this lease. These remedies are not exclusive and are in addition to any other remedies which may be available under this lease or at law.

16. 552.270-33 - DEFAULT BY LESSOR DURING THE TERM (AUG 1992)

(a) Each of the following shall constitute a default by Lessor under this lease:

(1) Failure to maintain, repair, operate or service the premises as and when specified in this lease, or failure to perform any other requirement of this lease as and when required provided any such failure shall remain uncured for a period of thirty (30) days next following Lessor's receipt of notice thereof from the Contracting Officer or an authorized representative.

(2) ~~Repeated and unexcused failure by Lessor to comply with one or more requirements of this lease shall constitute a default notwithstanding that one or all such failures shall have been timely cured pursuant to this clause~~.

(b) ~~If a default occurs, the Government may, by notice to Lessor, terminate this lease for default and if so terminated, the Government shall be entitled to the damages specified in the Default in Delivery Time Extensions clause~~.

INITIALS: _____ & _____
LESSOR GOVERNMENT

17. 552.270-13 - FIRE AND CASUALTY DAMAGE (AUG 1992)

If the entire premises are destroyed by fire or other casualty, this lease will immediately terminate. In case of partial destruction or damage, so as to render the premises untenantable, as determined by the Government, the Government may terminate the lease by giving written notice to the Lessor within 15 calendar days of the fire or other casualty; if so terminated, no rent will accrue to the Lessor after such partial destruction or damage; and if not so terminated, the rent will be reduced proportionately by supplemental agreement hereto effective from the date of such partial destruction or damage. Nothing in this lease shall be construed as relieving Lessor from liability for damage to or destruction of property of the United States of America caused by the willful or negligent act or omission of Lessor.

18. 552.270-15 - COMPLIANCE WITH APPLICABLE LAW (AUG 1992)

Lessor shall comply with all Federal, state and local laws applicable to the Lessor as owner or lessor, or both, of the building or premises, including, without limitation, laws applicable to the construction, ownership, alteration or operation of both or either thereof, and will obtain all necessary permits, licenses and similar items at Lessor's expense. The Government will comply with all Federal state and local laws applicable to and enforceable against it as a tenant under this lease; provided that nothing in this lease shall be construed as a waiver of any sovereign immunity of the Government. This lease shall be governed by Federal law.

19. 552.270-19 - ALTERATIONS (JUNE 1985)

~~The Government shall have the right during the existence of this lease to make alterations, attach fixtures, and erect structures or signs in or upon the premises hereby leased, which fixtures, additions or structures so placed in, on, upon, or attached to the said premises shall be and remain the property of the Government and may be removed or otherwise disposed of by the Government. If the lease contemplates that the Government is the sole occupant of the building, for purposes of this clause, the leased premises include the land on which the building is sited and the building itself. Otherwise, the Government shall have the right to tie into or make any physical connection with any structure located on the property as is reasonably necessary for appropriate utilization of the leased space.~~

20. ACCEPTANCE OF SPACE (JUNE 1994)

(a) When the Lessor has completed all alterations, improvements, and repairs necessary to meet the requirements of the lease, the Lessor shall notify the Contracting Officer. The Contracting Officer or designated representative shall promptly inspect the space.

(b) The Government will accept the space and the lease term will begin after determining that the space is substantially complete and contains the required occupiable square footage as indicated in the paragraph of this solicitation entitled "Amount and Type of Space."

21. 552.270-16 - INSPECTION - RIGHT OF ENTRY (AUG 1992)

(a) At any time and from time to time after receipt of an offer (until the same has been duly withdrawn or rejected), after acceptance thereof and during the term, the agents, employees and contractors of the Government may, upon reasonable prior notice to Offeror or Lessor, enter upon the offered premises or the premises, and all other areas of the building access to which is necessary to accomplish the purposes of entry, to determine the potential or actual compliance by the Offeror or Lessor with the requirements of the solicitation or this lease, which purposes shall include, but not be limited to: (1) inspecting, sampling and analyzing of suspected asbestos-containing materials and air monitoring for asbestos fibers; (2) inspecting the heating, ventilation and air conditioning system, maintenance records, and mechanical rooms for the offered premises or the premises; (3) inspecting for any leaks, spills, or other potentially hazardous conditions which may involve tenant exposure to hazardous or toxic substances; and (4) inspecting for any current or past hazardous waste operations, to ensure that appropriate mitigative actions were taken to alleviate any environmentally unsound activities in accordance with Federal, State and local law.

(b) Nothing in this clause shall be construed to create a Government duty to inspect for toxic materials or to impose a higher standard of care on the Government than on other lessees. The purpose of this clause is to promote the ease with which the Government may inspect the building. Nothing in this clause shall act to relieve the Lessor of any duty to inspect or liability which might arise as a result of Lessor's failure to inspect for or correct a hazardous condition.

22. 552.232-71 - PROMPT PAYMENT (APR 1989)

The Government will make payments under the terms and conditions specified in this clause. Payment shall be considered as being made on the day a check is dated or an electronic funds transfer is made. All days referred to in this clause are calendar days, unless otherwise specified.

(a) Payment due date.

(1) Rental payments. Rent shall be paid monthly in arrears and will be due on the first workday of each month, and only as provided for by the lease.
(i) When the date for commencement of rent falls on the 15th day of the month or earlier, the initial monthly rental payment under this contract shall become due on the first workday of the month following the month in which the commencement of the rent is effective.
(ii) When the date for commencement of rent falls after the 15th day of the month, the initial monthly rental payment under this contract shall become due on the first workday of the second month following the month in which the commencement of the rent is effective.

(2) Other payments. The due date for making payments other than rent shall be the later of the following two events:
(i) The 30th day after the designated billing office has received a proper invoice from the Contractor.
(ii) The 30th day after Government acceptance of the work or service. However, if the designated billing office fails to annotate the invoice with the actual date of receipt, the invoice payment due date shall be deemed to be the 30th day after the Contractor's invoice is dated, provided a proper invoice is received and there is no disagreement over quantity, quality, or Contractor compliance with contract requirements.

(b) Invoice and inspection requirements for payments other than rent.

(1) The Contractor shall prepare and submit an invoice to the designated billing office after completion of the work. A proper invoice shall include the following items:
(i) Name and address of the Contractor.
(ii) Invoice date.
(iii) Lease number.
(iv) Government's order number or other authorization.
(v) Description, price, and quantity of work or services delivered.
(vi) Name and address of Contractor official to whom payment is to be sent (must be the same as that in the remittance address in the lease or the order.)
(vii) Name (where practicable), title, phone number, and mailing address of person to be notified in the event of a defective invoice.

(2) The Government will inspect and determine the acceptability of the work performed or services delivered within 7 days after the receipt of a proper invoice or notification of completion of the work or services unless a different period is specified at the time the order is placed. If actual acceptance occurs later, for the purpose of determining the payment due date and calculation of interest, acceptance will be deemed to occur on the last day of the 7-day inspection period. If the work or service is rejected for failure to conform to the technical requirements of the contract, the 7 days will be counted beginning with receipt of a new invoice or notification. In either case, the Contractor is not entitled to any payment or interest unless actual acceptance by the Government occurs.

(c) Interest Penalty.

(1) An interest penalty shall be paid automatically by the Government, without request from the Contractor, if payment is not made by the due date.

(2) The interest penalty shall be at the rate established by the Secretary of the Treasury under Section 12 of the Contract Disputes Act of 1978 (41 U.S.C. 611) that is in effect on the day after the due date. This rate is referred to as the "Renegotiation Board Interest Rate," and it is published in the Federal Register semiannually on or about January 1 and July 1. The interest penalty shall accrue daily on the payment amount approved by the Government and be compounded in 30-day increments inclusive from the first day after the due date through the payment date.

(3) Interest penalties will not continue to accrue after the filing of a claim for such penalties under the clause at 52.233-1, Disputes, or for more than 1 year. Interest penalties of less than $1.00 need not be paid.

(4) Interest penalties are not required on payment delays due to disagreement between the Government and Contractor over the payment amount or other issues involving contract compliance or on amounts temporarily withheld or retained in accordance with

the terms of the contract. Claims involving disputes, and any interest that may be payable, will be resolved in accordance with the clause at 52.233-1, Disputes.

23. 552.232-73 - ELECTRONIC FUNDS TRANSFER PAYMENT (AUG 1992)

(Applies to leases which exceed $100,000 average net annual rental, including option periods.)

(a) Payments under this lease will be made by the Government either by check or electronic funds transfer (EFT). If the Lessor elects to receive payment by EFT, after award, but no later than 30 days before the first payment, the Lessor shall designate a financial institution for receipt of EFT payments, and shall submit this designation to the Contracting Officer or other Government official, as directed.

(b) For payment by EFT, the Lessor shall provide the following information:

(1) The American Bankers Association 9-digit identifying number for wire transfers of the financing institution receiving payment if the institution has access to the Federal Reserve Communications System.
(2) Number of account to which funds are to be deposited.
(3) Type of depositor account ("C" for checking, "S" for savings).
(4) If the Lessor is a new enrollee to the EFT system, a "Payment Information Form," SF 3881, must be completed before payment can be processed.

(c) In the event the Lessor, during the performance of this contract, elects to designate a different financial institution for the receipt of any payment made using EFT procedures, notification of such change and the required information specified above must be received by the appropriate Government official no later than 30 days prior to the date such change is to become effective.

(d) The documents furnishing the information required in this clause must be dated and contain the signature, title, and telephone number of the Lessor or an authorized representative designated by the Lessor, as well as the Lessor's name and lease number.

(e) Lessor failure to properly designate a financial institution or to provide appropriate payee bank account information may delay payments of amounts otherwise properly due.

24. 552.232-72 - INVOICE REQUIREMENTS (VARIATION) (APR 1989)

(This clause applies to payments other than rent.)

(a) Invoices shall be submitted in an original only, unless otherwise specified, to the designated billing office specified in this contract or purchase/delivery order.

(b) Invoices must include the Accounting Control Transaction (ACT) number provided below or on the purchase/delivery order.

ACT Number (to be supplied on individual orders)

(c) If information or documentation in addition to that required by the Prompt Payment clause of this contract is required in connection with an invoice for a particular order, the order will indicate what information or documentation must be submitted.

25. 52.232-23 - ASSIGNMENT OF CLAIMS (JAN 1986)

(a) The Contractor, under the Assignment of Claims Act, as amended, 31 USC 3727, 41 USC 15 (hereafter referred to as the "the Act"), may assign its rights to be paid amounts due or to become due as a result of the performance of this contract to a bank, trust company, or other financing institution, including any Federal lending agency. The assignee under such an assignment may thereafter further assign or reassign its right under the original assignment to any type of financing institution described in the preceding sentence.

(b) ~~Any assignment or reassignment authorized under the Act and this clause shall cover all unpaid amounts payable under this contract, and shall not be made to more than one party, except that an assignment or reassignment may be made to one party as agent or trustee for two or more parties participating in the financing of this contract~~.

(c) The Contractor shall not furnish or disclose to any assignee under this contract any classified document (including this contract) or information related to work under this contract until the Contracting Officer authorizes such action in writing.

INITIALS: CeRE & CJ
LESSOR GOVERNMENT

26. 552.270-31 - PAYMENT (AUG 1994)

(a) When space is offered and accepted, the occupiable square footage delivered will be confirmed by:

(1) the Government's measurement of plans submitted by the successful Offeror as approved by the Government, and an inspection of the space to verify that the delivered space is in conformance with such plans or

(2) a mutual on-site measurement of the space, if the Contracting Officer determines that it is necessary.

(b) Payment will not be made for space which is in excess of the amount of occupiable square footage stated in the lease.

(c) If it is determined that the amount of occupiable square footage actually delivered is less than the amount agreed to in the lease, the lease will be modified to reflect the amount of occupiable space delivered and the annual rental will be adjusted as follows:

Occupiable square feet not delivered multiplied by the occupiable square foot (OSF) rate equals the reduction in annual rent. The rate per occupiable square foot is determined by dividing the total annual rental by the occupiable square footage set forth in the lease.

OSF Not Delivered X Rate per OSF = Reduction in Annual Rent.

27. 552.203-5 - COVENANT AGAINST CONTINGENT FEES (FEB 1990)

(a) The Contractor warrants that no person or agency has been employed or retained to solicit or obtain this contract upon an agreement or understanding for a contingent fee, except a bona fide employee or agency. For breach or violation of this warranty, the Government shall have the right to annul this contract without liability or, in its discretion, to deduct from the contract price or consideration, or otherwise recover the full amount of the contingent fee.

(b) "Bona fide agency," as used in this clause, means an established commercial or selling agency (including licensed real estate agents or brokers), maintained by a Contractor for the purpose of securing business, that neither exerts nor proposes to exert improper influence to solicit or obtain Government contracts nor holds itself out as being able to obtain any Government contract or contracts through improper influence.

"Bona fide employee," as used in this clause, means a person, employed by a Contractor and subject to the Contractor's supervision and control as to time, place, and manner of performance, who neither exerts nor proposes to exert improper influence to solicit or obtain Government contracts nor holds out as being able to obtain any Government contract or contracts through improper influence.

"Contingent fee," as used in this clause, means any commission, percentage, brokerage, or other fee that is contingent upon the success that a person or concern has in securing a Government contract.

"Improper influence," as used in this clause, means any influence that induces or tends to induce a Government employee or officer to give consideration or to act regarding a Government contract on any basis other than the merits of the matter.

28. 52.203-7 - ANTI-KICKBACK PROCEDURES (OCT 1988)

(Applies to leases which exceed $100,000 average net annual rental, including option periods.)

(a) Definitions.

"Kickback," as used in this clause, means any money, fee, commission, credit, gift, gratuity, thing of value, or compensation of any kind which is provided, directly or indirectly, to any prime Contractor, prime Contractor employee, subcontractor, or subcontractor employee for the purpose of improperly obtaining or rewarding favorable treatment in connection with a prime contract or in connection with a subcontract relating to a prime contract.

"Person," as used in this clause, means a corporation, partnership, business association of any kind, trust, joint-stock company, or individual.

"Prime contract," as used in this clause, means a contract or contractual action entered into by the United States for the purpose of obtaining supplies, materials, equipment, or services of any kind.

"Prime Contractor," as used in this clause, means a person who has entered into a prime contract with the United States.

"Prime Contractor employee," as used in this clause, means any officer, partner, employee, or agent of a prime Contractor.

"Subcontract," as used in this clause, means a contract or contractual action entered into by a prime Contractor or subcontractor for the purpose of obtaining supplies, materials, equipment, or services of any kind under a prime contract.

"Subcontractor," as used in this clause, (1) means any person, other than the prime Contractor, who offers to furnish or furnishes any supplies, materials, equipment, or services of any kind under a prime contract or a subcontract entered into in connection with such prime contract, and (2) includes any person who offers to furnish or furnishes general supplies to the prime Contractor or a higher tier subcontractor.

"Subcontractor employee," as used in this clause, means any officer, partner, employee, or agent of a subcontractor.

(b) The Anti-Kickback Act of 1986 (41 U.S.C. 51-58) (the Act), prohibits any person from--

(1) Providing or attempting to provide or offering to provide any kickback;
(2) Soliciting, accepting, or attempting to accept any kickback; or
(3) Including, directly or indirectly, the amount of any kickback in the contract price charged by a prime Contractor to the United States or in the contract price charged by a subcontractor to a prime Contractor or higher tier subcontractor.

(c) (1) The Contractor shall have in place and follow reasonable procedures designed to prevent and detect possible violations described in paragraph (b) of this clause in its own operations and direct business relationships.

(2) When the Contractor has reasonable grounds to believe that a violation described in paragraph (b) of this clause may have occurred, the Contractor shall promptly report in writing the possible violation. Such reports shall be made to the inspector general of the contracting agency, the head of the contracting agency if the agency does not have an inspector general, or the Department of Justice.

(3) The Contractor shall cooperate fully with any Federal agency investigating a possible violation described in paragraph (b) of this clause.

(4) The Contracting Officer may (i) offset the amount of the kickback against any monies owed by the United States under the prime contract and/or (ii) direct that the Prime Contractor withhold from sums owed a subcontractor under the prime contract, the amount of the kickback. The Contracting Officer may order that monies withheld under subdivision (c)(4)(ii) of this clause be paid over to the Government unless the Government has already offset those monies under subdivision (c)(4)(i) of this clause. In the either case, the Prime Contractor shall notify the Contracting Officer when the monies are withheld.

(5) The Contractor agrees to incorporate the substance of this clause, including subparagraph (c)(5) but excepting subparagraph (c)(1), in all subcontracts under this contract.

29. 52.203-9 - REQUIREMENT FOR CERTIFICATE OF PROCUREMENT INTEGRITY MODIFICATION (NOV 1990)

(Applies to leases which exceed $100,000.)

(a) Definitions. The definitions set forth in FAR 3.104-4 are hereby incorporated in this clause.

(b) The contractor agrees that it will execute the certification set forth in paragraph (c) of this clause, when requested by the Contracting Officer in connection with the execution of any modification of this contract.

(c) Certification. As required in paragraph (b) of this clause, the officer or employee responsible for the modification proposal shall execute the following certification:

CERTIFICATE OF PROCUREMENT INTEGRITY - MODIFICATION (NOV 1990)

(1) I, [Name of certifier], am the officer or employee responsible for the preparation of this modification proposal and hereby certify that, to the best of my knowledge and belief, with the exception of any information described in this certification, I have no information concerning a violation or possible violation of subsections 27(a), (b), (d), or (f) of the Office of Federal Procurement Policy Act, as amended* (41 U.S.C. 423) (hereinafter referred to as "the Act"), as implemented in the FAR, occurring during the

conduct of this procurement (contract and modification number).

(2) As required by subsection 27(e)(1)(B) of the Act, I further certify that, to the best of my knowledge and belief each officer, employee, agent, representative, and consultant of [Name of Offeror] who has participated personally and substantially in the preparation or submission of this proposal has certified that he or she is familiar with, and will comply with, the requirements of subsection 27(a) of the Act, as implemented in the FAR, and will report immediately to me any information concerning a violation or possible violation of subsections 27(a), (b), (d), or (f) of the Act, as implemented in the FAR, pertaining to this procurement.

(3) Violations or possible violations: (Continue on plain bond paper if necessary and label Certificate of Procurement Integrity-Modification (Continuation Sheet), ENTER "NONE" IF NONE EXISTS)

_____

_____

(SAMPLE - DO NOT COMPLETE OR SIGN THIS CERTIFICATE. THE CONTRACTING OFFICER WILL SPECIFICALLY REQUEST IT WHEN NEEDED.)

_____

[signature of the officer or employee responsible for the modification proposal and date]

[typed name of the officer or employee responsible for the modification proposal]

*Subsections 27(a), (b), and (d) are effective on December 1, 1990. Subsection 27(f) is effective on June 1, 1991.

THIS CERTIFICATION CONCERNS A MATTER WITHIN THE JURISDICTION OF AN AGENCY OF THE UNITED STATES AND THE MAKING OF A FALSE, FICTITIOUS, OR FRAUDULENT CERTIFICATION MAY RENDER THE MAKER SUBJECT TO PROSECUTION UNDER TITLE 18, UNITED STATES CODE, SECTION 1001.

(End of certification)

(d) In making the certification in paragraph (2) of the certificate, the officer or employee of the competing Contractor responsible for the offer or bid, may rely upon a one-time certification from each individual required to submit a certification to the competing Contractor, supplemented by periodic training. These certifications shall be obtained at the earliest possible date after an individual required to certify begins employment or association with the Contractor. If a Contractor decides to rely on a certification executed prior to the suspension of section 27 (i.e., prior to December 1, 1989), the Contractor shall ensure that an individual who has so certified is notified that section 27 has been reinstated. These certifications shall be maintained by the Contractor for a period of 6 years from the date a certifying employee's employment with the company ends or, for an agency, representative, or consultant, 6 years from the date such individual ceases to act on behalf of the contractor.

(e) The certification required by paragraph (c) of this clause is a material representation of fact upon which reliance will be placed in executing this modification.

30. 552.203-73 - PRICE ADJUSTMENT FOR ILLEGAL OR IMPROPER ACTIVITY (SEP 1990)

(Applies to leases which exceed $100,000.)

(a) If the head of the contracting activity (HCA) or his or her designee determines that there was a violation of subsection 27(a) of the Office of Federal Procurement Policy Act, as amended (41 U.S.C. 423), as implemented in the Federal Acquisition Regulation, the Government, at its election, may--

(1) Reduce the monthly rental under this lease by 5 percent of the amount of the rental for each month of the remaining term of the lease, including any option periods, and recover 5 percent of the rental already paid;
(2) Reduce payments for alterations not included in monthly rental payments by 5 percent of the amount of the alterations agreement; or
(3) Reduce the payments for violations by a Lessor's subcontractor by an amount not to exceed the amount of profit or fee reflected in the subcontract at the time the subcontract was placed.

(b) Prior to making a determination as set forth above, the HCA or designee shall provide to the Lessor a written notice of the action being considered and the basis therefor. The Lessor shall have a period determined by the agency head or designee, but not less than 30 calendar days after receipt of such notice, to submit in person, in writing, or through a representative, information and argument in opposition to the proposed reduction. The agency head or designee may, upon good cause shown, determine to deduct less than the above amounts from payments.

(c) The rights and remedies of the Government specified herein are not exclusive, and are in addition to any other rights and remedies provided by law or under this lease.

31. 52.215-22 - PRICE REDUCTION FOR DEFECTIVE COST OR PRICING DATA (OCT 1995)

(Applies when cost or pricing data is required for work or service exceeding $500,000.)

(a) If any price, including profit or fee, negotiated in connection with this contract, or any cost reimbursable under this contract, was increased by any significant amount because (1) the Contractor or a subcontractor furnished cost or pricing data that were not complete, accurate, and current as certified in its Certificate of Current Cost or Pricing Data, (2) a subcontractor or prospective subcontractor furnished the Contractor cost or pricing data that were not complete, accurate, and current as certified in the Contractor's Certificate of Current Cost or Pricing Data, or (3) any of these parties furnished data of any description that were not accurate, the price or cost shall be reduced accordingly and the contract shall be modified to reflect the reduction.

(b) Any reduction in the contract price under paragraph (a) of this clause due to defective data from a prospective subcontractor that was not subsequently awarded the subcontract shall be limited to the amount, plus applicable overhead and profit markup, by which (1) the actual subcontract or (2) the actual cost to the Contractor, if there was no subcontract, was less than the prospective subcontract cost estimate submitted by the Contractor; *provided*, that the actual subcontract price was not itself affected by defective cost pricing data.

(c) (1) If the Contracting Officer determines under paragraph (a) of this clause that a price or cost reduction should be made, the Contractor agrees not to raise the following matters as a defense:

(i) The Contractor or subcontractor was a sole source supplier or otherwise was in a superior bargaining position and thus the price of the contract would not have been modified even if accurate, complete, and current cost or pricing data had been submitted.

(ii) The Contracting Officer should have known that the cost or pricing data in issue were defective even though the Contractor or subcontractor took no affirmative action to bring the character of the data to the attention of the Contracting Officer.

(iii) The contract was based on an agreement about the total cost of the contract and there was no agreement about the cost of each item procured under the contract.

(iv) The Contractor or subcontractor did not submit a Certificate of Current Cost or Pricing Data.

(2) (i) Except as prohibited by subdivision (c)(2)(ii) of this clause, an offset in an amount determined appropriate by the Contracting Officer based upon the facts shall be allowed against the amount of a contract price reduction if--

(A) The Contractor certifies to the Contracting Officer that, to the best of the Contractor's knowledge and belief, the Contractor is entitled to the offset in the amount requested; and

(B) The Contractor proves that the cost or pricing data were available before the date of agreement on the price of the contract (or price of the modification) and that the data were not submitted before such date.

(ii) An offset shall not be allowed if--

(A) The understated data was known by the Contractor to be understated when the Certificate or Current Cost or Pricing Data was signed; or

(B) The Government proves that the facts demonstrate that the contract price would not have increased in the amount to be offset even if the available data had been submitted before the date of agreement on price.

(d) If any reduction in the contract price under this clause reduces the price of items for which payment was made prior to the date of the modification reflecting the price reduction, the Contractor shall be liable to and shall pay the United States at the time such overpayment is repaid--

(1) Simple interest on the amount of such overpayment to be computed from the date(s) of overpayment to the Contractor to the date the Government is repaid by the Contractor at the applicable underpayment rate effective for each quarter prescribed by the Secretary of the Treasury under 26 U.S.C. 6621(a)(2); and

(2) A penalty equal to the amount of the overpayment, if the Contractor or subcontractor knowingly submitted cost or pricing data which were incomplete, inaccdurate, or noncurrent.

32. 552.270-20 - PROPOSALS FOR ADJUSTMENT (APR 1996)

(a) The Contracting Officer may, from time to time during the term of this lease, require changes to be made in the work or services to be performed and in the terms or conditions of this lease. Such changes will be required under the Changes clause.

(b) If the Contracting Officer makes a change within the general scope of the lease, the Lessor shall submit, in a timely manner, an itemized cost proposal for the work to be accomplished or services to be performed when the cost exceeds $25,000. The proposal, including all subcontractor work, will contain at least the following details--

(1) Material quantities and unit costs;
(2) Labor costs (identified with specific item or material to be placed or operation to be performed;
(3) Equipment costs;
(4) Worker's compensation and public liability insurance;
(5) Overhead;
(6) Profit; and
(7) Employment taxes under FICA and FUTA.

(c) The following Federal Acquisition Regulation (FAR) provisions also apply to all proposals exceeding the threshold for submission of cost or pricing data at FAR 15.804-2(a)(1)--

(1) The Lessor shall provide cost or pricing data including subcontractor cost or pricing data (48 CFR 15.804-2);
(2) The Lessor's representative, all contractors, and subcontractors whose portion of the work exceeds the threshold for submission of cost or pricing data must sign and return the "Certificate of Current Cost or Pricing Data" (48 CFR 15.804-4); and
(3) The agreement for "Price Reduction for Defective Cost or Pricing Data" must be signed and returned (48 CFR 15.804-8).

(d) Lessors shall also refer to 48 CFR Part 31, Contract Cost Principles, for information on which costs are allowable, reasonable, and allocable in Government work.

33. 552.270-21 - CHANGES (JUL 1995)

(a) ~~The Contracting Officer may at any time, by written order, make changes within the general scope of this lease in any one or more of the following:~~

(1) ~~Specifications (including drawings and designs)~~;
(2) ~~Work or services~~;
(3) ~~Facilities or space layout; or~~
(4) ~~Amount of space (with the consent of the lessor).~~

(b) If any such change causes an increase or decrease in Lessor's cost of or the time required for performance under this lease, whether or not changed by the order, the Contracting Officer shall modify this lease to provide for one or more of the following:

(1) A modification of the delivery date;
(2) An equitable adjustment in the rental rate;
(3) A lump sum equitable adjustment; or
(4) An equitable adjustment of the annual operating costs per occupiable square foot specified in this lease.

(c) The Lessor shall assert its right to an adjustment under this clause within 30 days from the date of receipt of the change order and shall submit a proposal for adjustment. Failure to agree to any adjustment shall be a dispute under the Disputes clause. However, nothing in this clause shall excuse the lessor from proceeding with the change as directed.

(d) Absent such written change order, the Government shall not be liable to Lessor under this clause.

34. 552.215-70 - EXAMINATION OF RECORDS BY GSA (FEB 1996)

The Contractor agrees that the Administrator of General Services, or any duly authorized representative shall, until the expiration of 3 years after final payment under this contract, or of the time periods for the particular records specified in Subpart 4.7 of the Federal Acquisition Regulation (48 CFR 4.7), whichever expires earlier, have access to and the right to examine any books, documents, papers, and records of the Contractor involving transactions related to this contract or compliance with any clauses thereunder. The Contractor further agrees to include in all its subcontracts hereunder a provision to the effect that the subcontractor agrees that the Administrator of General Services, or any duly authorized representatives shall, until the expiration of 3 years after final payment under the subcontract, or of the time periods for the particular records specified in Subpart 4.7 of the Federal Acquisition Regulation (48 CFR 4.7), whichever expires earlier, have access to and the right to examine any books, documents, papers, and records of such subcontractor, involving transactions related to the subcontract or compliance with any clauses thereunder. The term "subcontract" as used in this clause excludes (a) purchase orders not exceeding $100,000 and (b) subcontracts or purchase orders for public utility services at rates established for uniform applicability to the general public.

35. 52.233-1 - DISPUTES (OCT 1995)

(a) This contract is subject to the Contract Disputes Act of 1978, as amended (41 U.S.C. 601-613).

(b) Except as provided in the Act, all disputes arising under or relating to this contract shall be resolved under this clause.

(c) "Claim," as used in this clause, means a written demand or written assertion by one of the contracting parties seeking, as a matter of right, the payment of money in a sum certain, the adjustment or interpretation of contract terms, or other relief arising under or relating to this contract. A claim arising under a contract, unlike a claim relating to that contract, is a claim that can be resolved under a contract clause that provides for the relief sought by the claimant. However, a written demand or written assertion by the Contractor seeking the payment of money exceeding $100,000 is not a claim under the Act until certified as required by subparagraph (d)(2) of this clause. A voucher, invoice, or other routine request for payment that is not in dispute when submitted is not a claim under the Act. The submission may be converted to a claim under the Act, by complying with the submission and certification requirements of this clause, if it is disputed either as to liability or amount or is not acted upon in a reasonable time.

(d) (1) A claim by the Contractor shall be made in writing and, unless otherwise stated in this contract, submitted within 6 years after accrual of the claim to the Contracting Officer for a written decision. A claim by the Government against the Contractor shall be subject to a written decision by the Contracting Officer.

(2) (i) Contractors shall provide the certification specified in subparagraph (d)(2)(iii) of this clause when submitting any claim--

(A) Exceeding $100,000; or

(B) Regardless of the amount claimed, when using--

(1) Arbitration conducted pursuant to 5 U.S.C. 575-580; or

(2) Any other alternative means of dispute resolution (ADR) technique that the agency elects to handle in accordance with the Administrative Dispute Resolution Act (ADRA).

(ii) The certification requirement does not apply to issues in controversy that have not been submitted as all or part of a claim.

(iii) The certification shall state as follows: "I certify that the claim is made in good faith; that the supporting data are accurate and complete to the best of my knowledge and belief; that the amount requested accurately reflects the contract adjustment for which the Contractor believes the Government is liable; and that I am duly authorized to certify the claim on behalf of the Contractor."

(3) The certification may be executed by any person duly authorized to bind the Contractor with respect to the claim.

(e) For Contractor claims of $100,000 or less, the Contracting Officer must, if requested in writing by the Contractor, render a decision within 60 days of the request. For Contractor-certified claims over $100,000, the Contracting Officer must, within 60 days, decide the claim or notify the Contractor of the date by which the decision will be made.

(f) The Contracting Officer's decision shall be final unless the Contractor appeals or files a suit as provided in the Act.

(g) If the claim by the Contractor is submitted to the Contracting Officer or a claim by the Government is presented to the Contractor, the parties, by mutual consent, may agree to use

ADR. If the Contractor refuses an offer for alternative disputes resolution, the Contractor shall inform the Contracting Officer, in writing, of the Contractor's specific reasons for rejecting the request. When using arbitration conducted pursuant to 5 U.S.C. 575-580, or when using any other ADR technique that the agency elects to handle in accordance with the ADRA, any claim, regardless of amount, shall be accompanied by the certification described in subparagraph (d)(2)(iii) of this clause, and executed in accordance with subparagraph (d)(3) of this clause.

(h) The Government shall pay interest on the amount found due and unpaid from (1) the date that the Contracting Officer receives the claim (certified if required); or (2) the date that payment otherwise would be due, if that date is later, until the date of payment. With regard to claims having defective certifications, as defined in FAR 33.201, interest shall be paid from the date that the Contracting Officer initially receives the claim. Simple interest on claims shall be paid at the rate, fixed by the Secretary of the Treasury as provided in the Act, which is applicable to the period during which the Contracting Officer receives the claim and then at the rate applicable for each 6-month period as fixed by the Treasury Secretary during the pendency of the claim.

(i) The Contractor shall proceed diligently with performance of this contract, pending final resolution of any request for relief, claim, appeal, or action arising under the contract, and comply with any decision of the Contracting Officer.

36. 552.270-40 - ASBESTOS AND HAZARDOUS WASTE MANAGEMENT (AUG 1992)

The certifications made by the Offeror regarding asbestos and hazardous waste management contained in the representation and certification provisions of this lease are material representations of fact upon which the Government relies when making award. If it is later determined that the presence or management of asbestos and/or hazardous waste has been misrepresented, the Government reserves the right to require the Lessor, at no cost to the Government, to abate (remove, encapsulate, enclose, or repair) such asbestos and/or mitigate hazardous waste conditions, with such work performed in accordance with Federal (e.g., EPA, OSHA, and DOT), State, and local regulations and guidance, or, alternatively, the Government may terminate the lease. This is in addition to other remedies available to the Government.

37. 52.222-26 - EQUAL OPPORTUNITY (APR 1984)

(a) If, during any 12-month period (including the 12 months preceding the award of this contract), the Contractor has been or is awarded nonexempt Federal contracts and/or subcontracts that have an aggregate value in excess of $10,000, the Contractor shall comply with subparagraphs (b)(1) through (11) below. Upon request, the Contractor shall provide information necessary to determine the applicability of this clause.

(b) During performing this contract, the Contractor agrees as follows:

(1) The Contractor shall not discriminate against any employee or applicant for employment because of race, color, religion, sex, or national origin.

(2) The Contractor shall take affirmative action to ensure the applicants are employed, and that employees are treated during employment, without regard to their race, color, religion, sex, or national origin. This shall include, but not be limited to, (i) employment, (ii) upgrading, (iii) demotion, (iv) transfer, (v) recruitment or recruitment advertising, (vi) layoff or termination, (vii) rates of pay or other forms of compensation, and (viii) selection for training, including apprenticeship.

(3) The Contractor shall post in conspicuous places available to employees and applicants for employment the notices to be provided by the Contracting Officer that explain this clause.

(4) The Contractor shall, in all solicitations or advertisements for employees placed by or on behalf of the Contractor, state that all qualified applicants will receive consideration for employment without regard to race, color, religion, sex, or national origin.

(5) The Contractor shall send, to each labor union or representative of workers with which it has a collective bargaining agreement or other contract or understanding, the notice to be provided by the Contracting Officer advising the labor union or workers' representative of the Contractor's commitments under this clause, and post copies of the notice in conspicuous places available to employees and applicants for employment.

(6) The Contractor shall comply with Executive Order 11246, as amended, and the rules, regulations, and orders of the Secretary of Labor.

(7) The Contractor shall furnish to the contracting agency all information required by Executive Order 11246, as amended, and by the rules, regulations, and orders of the Secretary of Labor. Standard Form 100 (EEO-1), or any successor form, is the prescribed form to be filed within 30 days following the award, unless filed within 12 months preceding the date of award.

(8) The Contractor shall permit access to its books, records, and accounts by the contracting agency or the Office of Federal Contract Compliance Programs (OFCCP) for the purpose of investigation to ascertain the Contractor's compliance with the applicable rules, regulations, and orders.

(9) If the OFCCP determines that the Contractor is not in compliance with this clause or any rule, regulation, or order of the Secretary of Labor, this contract may be canceled, terminated, or suspended in whole or in part and the Contractor may be declared ineligible for further Government contracts, under the procedures authorized in Executive Order 11246, as amended. In addition, sanctions may be imposed and remedies invoked against the Contractor as provided in Executive Order 11246, as amended, the rules, regulations, and orders of the Secretary of Labor, or as otherwise provided by law.

(10) The Contractor shall include the terms and conditions of subparagraph (b)(1) through (11) of this clause in every subcontract or purchase order that is not exempted by the rules, regulations, or orders of the Secretary of Labor issued under Executive Order 11246, as amended, so that these terms and conditions will be binding upon each subcontractor or vendor.

(11) The Contractor shall take such action with respect to any subcontract or purchase order as the contracting agency may direct as a means of enforcing these terms and conditions, including sanctions for noncompliance; provided, that if the Contractor becomes involved in, or is threatened with, litigation with a subcontractor or vendor as a result of any direction, the Contractor may request the United States to enter into the litigation to protect the interests of the United States.

(c) Notwithstanding any other clause in this contract, disputes relative to this clause will be governed by the procedures in 41 CFR 60-1.1.

38. 52.222-35 - AFFIRMATIVE ACTION FOR SPECIAL DISABLED AND VIETNAM ERA VETERANS (APR 1984) (DEVIATION)

(a) Definitions.

"Appropriate office of the State employment service system," as used in this clause, means the local office of the Federal-State national system of public employment offices with assigned responsibility for serving the area where the employment opening is to be filled, including the District of Columbia, Guam, Puerto Rico, and the Virgin Islands.

"Positions that will be filled from within the Contractor's organization," as used in this clause, means employment openings for which no consideration will be given to persons outside the Contractor's organization (including any affiliates, subsidiaries, and the parent companies) and includes any openings that the Contractor proposes to fill from regularly establish "recall" lists.

"Employment openings," as used in this clause, includes full-time employment, temporary employment of over 3 days, and part-time employment, but does not include (1) executive and top management positions, (2) positions that will be filled from within the Contractor's organization or under a customary and traditional employer-union hiring arrangement, or (3) openings in an educational institution that are restricted to students of that institution.

(b) General.

(1) Regarding any position for which the employee or applicant for employment is qualified, the Contractor shall not discriminate against the individual because the individual is a special disabled or Vietnam era veteran. The Contractor agrees to take affirmative action to employ, advance in employment, and otherwise treat qualified special disabled and Vietnam era veterans without discrimination based upon their disability or veterans' status in all employment practices such as--

(i) Employment;
(ii) Upgrading;
(iii) Demotion or transfer;
(iv) Recruitment;
(v) Advertising;
(vi) Layoff or termination;
(vii) Rates of pay or other forms of compensation; and
(viii) Selection for training, including apprenticeship.

(2) The Contractor agrees to comply with the rules, regulations, and relevant orders of the Secretary of Labor (Secretary) issued under the Vietnam Era Veterans' Readjustment Assistance Act of 1972 (the Act), as amended.

(c) Listing openings.

(1) The Contractor agrees to list all employment openings existing at contract award or occurring during contract performance, at an appropriate office of the State employment service system in the locality where the opening occurs. These openings include those occurring at any contractor facility, including one not connected with performing this contract. An independent corporate affiliate is exempt from this requirement.

(2) State and local government agencies holding Federal contracts of $10,000 or more shall also list all their openings with the appropriate office of the State employment service.

(3) The listing of employment openings with the State employment service system is required at least concurrently with using any other recruitment source or effort and involves the obligations of placing a bona fide job order, including accepting referrals of veterans and nonveterans. This listing does not require hiring any particular job applicant or hiring from any particular group of job applicants and is not intended to relieve the Contractor from any requirements of Executive orders or regulations concerning nondiscrimination in employment.

(4) Whenever the Contractor becomes contractually bound to the listing terms of this clause, it shall advise the State employment service system, in each State where it has establishments, of the name and location of each hiring location in the State. As long as the Contractor is contractually bound to these terms and has so advised the State system, it need not advise the State system of subsequent contracts. The Contractor may advise the State system when it is no longer bound by this contract clause.

(5) Under the most compelling circumstances, an employment opening may not be suitable for listing, including situations when (i) the Government's needs cannot reasonably be supplied, (ii) listing would be contrary to National security, or (iii) the requirement of listing would not be in the Government's interest.

(d) Applicability.

(1) This clause does not apply to the listing of employment openings which occur and are filled outside the 50 states, the District of Columbia, the Commonwealth of Puerto Rico, Guam, and the Virgin Islands.

(2) The terms of paragraph (c) above of this clause do not apply to openings that the Contractor proposes to fill from within its own organization or under a customary and traditional employer-union hiring arrangement. This exclusion does not apply to a particular opening once an employer decides to consider applicants outside of its own organization or employer-union arrangement for that opening.

(e) Postings.

(1) The Contractor agrees to post employment notices stating (i) the Contractor's obligation under the law to take affirmative action to employ and advance in employment qualified special disabled veterans and veterans of the Vietnam era, and (ii) the rights of applicants and employees.

(2) These notices shall be posted in conspicuous places that are available to employees and applicants for employment. They shall be in a form prescribed by the Director, Office of Federal Contract Compliance Programs, Department of Labor (Director), and provided by or through the Contracting Officer.

(3) The Contractor shall notify each labor union or representative of workers with which it has a collective bargaining agreement or other contract understanding, that the Contractor is bound by the terms of the Act, and is committed to take affirmative action to employ, and advance in employment, qualified special disabled and Vietnam era veterans.

(f) Noncompliance. If the Contractor does not comply with the requirements of this clause, appropriate actions may be taken under the rules, regulations, and relevant orders of the Secretary issued pursuant to the Act.

(g) Subcontracts. The Contractor shall include the terms of this clause in every subcontract or purchase order of $10,000 or more unless exempted by rules, regulations, or orders of the Secretary. The Contractor shall act as specified by the Director to enforce the terms, including action for noncompliance.

39. 52.222-36 - AFFIRMATIVE ACTION FOR HANDICAPPED WORKERS (APR 1984)

(a) General.

(1) Regarding any position for which the employee or applicant for employment is qualified, the Contractor shall not discriminate against any employee or applicant because of physical or mental handicap. The Contractor agrees to take affirmative

action to employ, advance in employment and otherwise treat qualified handicapped individuals without discrimination based upon their physical or mental handicap in all employment practices such as--

(i) Employment;
(ii) Upgrading;
(iii) Demotion or transfer;
(iv) Recruitment;
(v) Advertising;
(vi) Layoff or termination;
(vii) Rates of pay or other forms of compensation; and
(viii) Selection for training, including apprenticeship.

(2) The Contractor agrees to comply with the rules, regulations, and relevant orders of the Secretary of Labor (Secretary) issued under the Rehabilitation Act of 1973 (29 USC 793) (the Act), as amended.

(b) Postings.

(1) The Contractor agrees to post employment notices stating (i) the Contractor's obligation under the law to take affirmative action to employ and advance in employment qualified handicapped individuals and (ii) the rights of applicants and employees.

(2) These notices shall be posted in conspicuous places that are available to employees and applicants for employment. They shall be in a form prescribed by the Director, Office of Federal Contract Compliance Programs, Department of Labor (Director), and provided by or through the Contracting Officer.

(3) The Contractor shall notify each labor union or representative of workers with which it has a collective bargaining agreement or other contract understanding, that the Contractor is bound by the terms of Section 503 of the Act and is committed to take affirmative action to employ, and advance in employment, qualified physically and mentally handicapped individuals.

(c) Noncompliance. If the Contractor does not comply with the requirements of this clause, appropriate actions may be taken under the rules, regulations, and relevant orders of the Secretary issued pursuant to the Act.

(d) Subcontracts. The Contractor shall include the terms of this clause in every subcontract or purchase order in excess of $2,500 unless exempted by rules, regulations, or orders of the Secretary. The Contractor shall act as specified by the Director to enforce the terms, including action for noncompliance.

40. 52.222-37 - EMPLOYMENT REPORTS ON SPECIAL DISABLED VETERANS AND VETERANS OF THE VIETNAM ERA (JAN 1988)

(a) The Contractor shall report at least annually, as required by the Secretary of Labor, on:

(1) The number of special disabled veterans and the number of veterans of the Vietnam era in the workforce of the contractor by job category and hiring location; and

(2) The total number of new employees hired during the period covered by the report, and of that total, the number of special disabled veterans, and the number of veterans of the Vietnam era.

(b) The above items shall be reported by completing the form entitled "Federal Contractor Veterans' Employment Report VETS-100."

(c) Reports shall be submitted no later than March 31 of each year beginning March 31, 1988.

(d) The employment activity report required by paragraph (a)(2) of this clause shall reflect total hires during the most recent 12-month period as of the ending date selected for the employment profile report required by paragraph (a)(1) of this clause. Contractors may select an ending date: (1) As of the end of any pay period during the period January through March 1 of the year the report is due, or (2) as of December 31, if the Contractor has previous written approval from the Equal Employment Opportunity Commission to do so for purposes of submitting the Employer Information Report EEO-1 (Standard Form 100).

(e) The count of veterans reported according to paragraph (a) of this clause shall be based on voluntary disclosure. Each Contractor subject to the reporting requirements at 38 U.S.C. 2012(d) shall invite all special disabled veterans and veterans of the Vietnam era who wish to benefit under the affirmative action program at 38 U.S.C. 2012 to identify themselves to the Contractor. The invitation shall state that the information is voluntarily provided, that the information will be kept confidential, that disclosure or refusal to provide the information will

not subject the applicant or employee to any adverse treatment, and that the information will be used only in accordance with the regulations promulgated under 38 U.S.C. 2012.

(f) Subcontracts. The Contractor shall include the terms of this clause in every subcontract or purchase order of $10,000 or more unless exempted by rules, regulations, or orders of the Secretary.

41. 52.209-6 - PROTECTING THE GOVERNMENT'S INTEREST WHEN SUBCONTRACTING WITH CONTRACTORS DEBARRED, SUSPENDED, OR PROPOSED FOR DEBARMENT (AUG 1995)

(a) The Government suspends or debars Contractors to protect the Government's interests. Contractors shall not enter into any subcontract in excess of the small purchase limitation at FAR 13.000 with a Contractor that has been debarred, suspended, or proposed for debarment unless there is a compelling reason to do so.

(b) The Contractor shall require each proposed first-tier subcontractor, whose subcontract will exceed the small purchase limitation at FAR 13.000, to disclose to the Contractor, in writing, whether as of the time of award of the subcontract, the subcontractor, or its principals, is or is not debarred, suspended, or proposed for debarment by the Federal Government.

(c) A corporate officer or designee of the Contractor shall notify the Contracting Officer, in writing, before entering into a subcontract with a party that is debarred, suspended or proposed for debarment (See FAR 9.404 for information on the List of Parties Excluded from Federal Procurement and Nonprocurement Programs). The notice must include the following:

(1) The name of the subcontractor,
(2) The Contractor's knowledge of the reasons for the subcontractor being on the List of Parties Excluded from Federal Procurement and Nonprocurement Programs;
(3) The compelling reason(s) for doing business with the subcontractor notwithstanding its inclusion on the List of Parties Excluded from Federal Procurement and Nonprocurement Programs;
(4) The systems and procedures the Contractor has established to ensure that it is fully protecting the Government's interests when dealing with such subcontractor in view of the specific basis for the party's debarment, suspension, or proposed debarment.

42. 52.215-24 - SUBCONTRACTOR COST OR PRICING DATA (OCT 1995)

(Applies when the clause 52.215-22 is applicable.)

(a) Before awarding any subcontract expected to exceed the threshold for submission of cost or pricing data at FAR 15.804-2(a)(1), on the date of agreement on price or the date of award, which ever is later; or before pricing any subcontract modification involving a pricing adjustment expected to exceed the threshold for submission of cost or pricing data at FAR 15.804-2(a)(1), the Contractor shall require the subcontractor to submit cost or pricing data (actually or by specific identification in writing), unless an exception under FAR 15.804-1 applies.

(b) The Contractor shall require the subcontractor to certify in substantially the form prescribed in subsection 15.804-4 of the Federal Acquisition Regulation (FAR) that, to the best of its knowledge and belief, the data submitted under paragraph (a) of this clause were accurate, complete, and current as of the date of agreement on the negotiated price of the subcontract or subcontract modification.

(c) In each subcontract that exceeds the threshold for submission of cost or pricing data at FAR 15.804-2(a)(1), when entered into, the Contractor shall insert either--

(1) The substance of this clause, including this paragraph (c), if paragraph (a) of this clause requires submission of cost or pricing data for the subcontract; or
(2) The substance of the clause at FAR 52.215-25, Subcontractor Cost or Pricing Data--Modifications.

43. 52.219-8 - UTILIZATION OF SMALL, SMALL DISADVANTAGED AND WOMEN-OWNED SMALL BUSINESS CONCERNS (OCT 1995)

(Applies to leases which exceed $100,000 average net annual rental, including option periods.)

(a) It is the policy of the United States that small business concerns, small business concerns owned and controlled by socially and economically disadvantaged individuals and small business concerns owned and controlled by women shall have the maximum practicable opportunity to participate in performing contracts let by any Federal agency, including

contracts and subcontracts for subsystems, assemblies, components, and related services for major systems. It is further the policy of the United States that its prime contractors establish procedures to ensure the timely payment of amounts due pursuant to the terms of their subcontracts with small business concerns, small business concerns owned and controlled by socially and economically disadvantaged individuals and small business concerns owned and controlled by women.

(b) The Contractor hereby agrees to carry out this policy in the awarding of subcontracts to the fullest extent consistent with efficient contract performance. The Contractor further agrees to cooperate in any studies or surveys as may be conducted by the United States Small Business Administration or the awarding agency of the United States as may be necessary to determine the extent of the Contractor's compliance with this clause.

(c) As used in this contract, the term "small business concern" shall mean a small business as defined pursuant to section 3 of the Small Business Act and relevant regulations promulgated pursuant thereto. The term "small business concern owned and controlled by socially and economically disadvantaged individuals" shall mean a small business concern (1) which is at least 51 percent unconditionally owned by one or more socially and economically disadvantaged individuals; or, in the case of any publicly owned business, at least 51 per centum of the stock of which is unconditionally owned by one or more socially and economically disadvantaged individuals; and (2) whose management and daily business operations are controlled by one or more of such individuals. This term also means a small business concern that is at least 51 percent unconditionally owned by an economically disadvantaged Indian tribe or Native Hawaiian Organization, or a publicly owned business having at least 51 percent of its stock unconditionally owned by one of these entities which has its management and daily business controlled by members of an economically disadvantaged Indian tribe or Native Hawaiian Organization, and which meets the requirements of 13 CFR 124. The Contractor shall presume that socially and economically disadvantaged individuals include Black Americans, Hispanic Americans, Native Americans, Asian-Pacific Americans, Subcontinent Asian Americans, and other minorities, or any other individual found to be disadvantaged by the Administration pursuant to section 8(a) of the Small Business Act. The Contractor shall presume that socially and economically disadvantaged entities also include Indian Tribes and Native Hawaiian Organizations.

(d) The term "small business concerns owned and controlled by women" shall mean a small business concern (i) which is at least 51 percent owned by one or more women, or, in the case of any publicly owned business, at lease 51 percent of the stock of which is owned by one or more women, and (ii) whose management and daily business operations are controlled by one or more women; and

(e) Contractors acting in good faith may rely on written representations by their subcontractors regarding their status as a small business concern, a small business concern owned and controlled by socially and economically disadvantaged individuals or a small business concern owned and controlled by women.

44. 52.219-9 SMALL, SMALL DISADVANTAGED AND WOMEN-OWNED SMALL BUSINESS SUBCONTRACTING PLAN (OCT 1995)

(Applies to leases which exceed $500,000.)

a) This clause does not apply to small business concerns.

b) "Commercial product," as used in this clause, means a product in regular production that is sold in substantial quantities to the general public and/or industry at established catalog or market prices. It also means a product which, in the opinion of the Contracting Officer, differs only insignificantly from the Contractor's commercial product.

"Subcontract," as used in this clause, means any agreement (other than one involving an employer-employee relationship) entered into by a Federal Government prime Contractor or subcontractor calling for supplies or services required for performance of the contract or subcontract.

(c) The offeror, upon request by the Contracting Officer, shall submit and negotiate a subcontracting plan, where applicable, which separately addresses subcontracting with small business concerns, with small disadvantaged business concerns and with women-owned small business concerns. If the offeror is submitting an individual contract plan, the plan must separately address subcontracting with small business concerns, small disadvantaged business concerns, and women-owned small business concerns with a separate part for the basic contract and separate parts for each option (if any)

(d) The offeror's subcontracting plan shall include the following:

(1) Goals, expressed in terms of percentages of total planned subcontracting dollars, for the use of small business concerns, small disadvantaged business concerns and women-owned small business concerns as subcontractors. The offeror shall include all subcontracts that contribute to contract performance, and may include a proportionate share of products and services that are normally allocated as indirect costs.

(2) A statement of--
- (i) Total dollars planned to be subcontracted;
- (ii) Total dollars planned to be subcontracted to small business concerns;
- (iii) Total dollars planned to be subcontracted to small disadvantaged business concerns; and
- (iv) Total dollars planned to be subcontracted to women-owned small business concerns.

(3) A description of the principal types of supplies and services to be subcontracted, and an identification of the types planned for subcontracting to (i) small business concerns, (ii) small disadvantaged business concerns and (iii) women-owned small business concerns.

(4) A description of the method used to develop the subcontracting goals in paragraph (d)(1) of this clause.

(5) A description of the method used to identify potential sources for solicitation purposes (e.g., existing company source lists, the Procurement Automated Source System (PASS) of the Small Business Administration, the National Minority Purchasing Council Vendor Information Service, the Research and Information Division of the Minority Business Development Agency in the Department of Commerce, or small, small disadvantaged and women-owned small business concerns trade associations). A firm may rely on the information contained in PASS as an accurate representation of a concern's size and ownership characteristics for purposes of maintaining a small business source list. A firm may rely on PASS as a small business source list. Use of the PASS as its source list does not relieve a firm of its responsibilities (e.g., outreach, assistance, counseling, publicizing subcontracting opportunities) in this clause.

(6) A statement as to whether or not the offeror included indirect costs in establishing subcontracting goals, and a description of the method used to determine the proportionate share of indirect costs to be incurred with (i) small business concerns, (ii) small disadvantaged business concerns, and (iii) women-owned small business concerns.

(7) The name of the individual employed by the offeror who will administer the offeror's subcontracting program, and a description of the duties of the individual.

(8) A description of the efforts the offeror will make to assure that small, small disadvantaged and women-owned small business concerns have an equitable opportunity to compete for subcontracts.

(9) Assurances that the offeror will include the clause in this contract entitled "Utilization of Small, Small Disadvantaged and Women-Owned Small Business Concerns" in all subcontracts that offer further subcontracting opportunities, and that the offeror will require all subcontractors (except small business concerns) who receive subcontracts in excess of $500,000 ($1,000,000 for construction of any public facility) to adopt a plan similar to the plan agreed to by the offeror.

(10) Assurances that the offeror will (i) cooperate in any studies or surveys as may be required, (ii) submit periodic reports in order to allow the Government to determine the extent of compliance by the offeror with the subcontracting plan, (iii) submit Standard Form (SF) 294, Subcontracting Report for Individual Contracts, and/or SF 295, Summary Subcontract Report, in accordance with the instructions on the forms, and (iv) ensure that its subcontractors agree to submit Standard Forms 294 and 295.

(11) A recitation of the types of records the offeror will maintain to demonstrate procedures that have been adopted to comply with the requirements and goals in the plan, including establishing source lists; and a description of its efforts to locate small, small disadvantaged and women-owned small business concerns and award subcontracts to them. The records shall include at least the following (on a plant-wide or company-wide basis, unless otherwise indicated):
- (i) Source lists (e.g., PASS), guides, and other data that identify small, small disadvantaged and women-owned small business concerns.
- (ii) Organizations contacted in an attempt to locate sources that are small, small disadvantaged or women-owned small business concerns.
- (iii) Records on each subcontract solicitation resulting in an award of more than $100,000, indicating (A) whether small business concerns were solicited and if not, why not, (B) whether small disadvantaged business concerns were solicited and if not, why not, (C) whether women-owned small business concerns were solicited and if not, why not, and (D) if applicable, the reason award was not made to a small business concern.
- (iv) Records of any outreach efforts to contact (A) trade associations, (B) business development organizations, and (C) conferences and trade fairs to locate small, small disadvantaged and women-owned small business sources.

(v) Records of internal guidance and encouragement provided to buyers through (A) workshops, seminars, training, etc., and (B) monitoring performance to evaluate compliance with the program's requirements.

(vi) On a contract-by-contract basis, records to support award data submitted by the offeror to the Government, including the name, address, and business size of each subcontractor. Contractors having company or division-wide annual plans need not comply with this requirement.

(e) In order to effectively implement this plan to the extent consistent with efficient contract performance, the Contractor shall perform the following functions:

(1) Assist small, small disadvantaged and women-owned small business concerns by arranging solicitations, time for the preparation of bids, quantities, specifications, and delivery schedules so as to facilitate the participation by such concerns. Where the Contractor's lists of potential small, small disadvantaged and women-owned small business subcontractors are excessively long, reasonable efforts shall be made to give all such small business concerns an opportunity to compete over a period of time.

(2) Provide adequate and timely consideration of the potentialities of small, small disadvantaged and women-owned small business concerns in all "make-or-buy" decisions.

(3) Counsel and discuss subcontracting opportunities with representatives of small, small disadvantaged and women-owned small business firms.

(4) Provide notice to subcontractors concerning penalties and remedies for misrepresentations of business status as small, small disadvantaged or women-owned small business for the purpose of obtaining a subcontract that is to be included as part or all of a goal contained in the Contractor's subcontracting plan.

(f) A master subcontracting plan on a plant or division-wide basis which contains all the elements required by (d) above, except goals, may be incorporated by reference as a part of the subcontracting plan required of the offeror by this clause; provided, (1) the master plan has been approved, (2) the offeror provides copies of the approved master plan and evidence of its approval to the Contracting Officer, and (3) goals and any deviations from the master plan deemed necessary by the Contracting Officer to satisfy the requirements of this contract are set forth in the individual subcontracting plan.

(g) (1) If a commercial product is offered, the subcontracting plan required by this clause may relate to the offeror's production generally, for both commercial and noncommercial products, rather than solely to the Government contract. In these cases, the offeror shall, with the concurrence of the Contracting Officer, submit one company-wide or division-wide annual plan.

(2) The annual plan shall be reviewed for approval by the agency awarding the offeror its first prime contract requiring a subcontracting plan during the fiscal year, or by an agency satisfactory to the Contracting Officer.

(3) The approved plan shall remain in effect during the offeror's fiscal year for all of the offeror's commercial products.

(h) Prior compliance of the offeror with other such subcontracting plans under previous contracts will be considered by the Contracting Officer in determining the responsibility of the offeror for award of the contract.

(i) The failure of the Contractor or subcontractor to comply in good faith with (1) the clause of this contract entitled "Utilization of Small, Small Disadvantaged and Women-Owned Small Business Concerns," or (2) an approved plan required by this clause, shall be a material breach of the contract.

45. 52.219-16 LIQUIDATED DAMAGES--SUBCONTRACTING PLAN (OCT 1995)

(a) *Failure to make a good faith effort to comply with the subcontracting plan*, as used in this clause, means a willful or intentional failure to perform in accordance with the requirements of the subcontracting plan approved under the clause in this contract entitled "Small, Small Disadvantaged and Women-Owned Small Business Subcontracting Plan," or willful or intentional action to frustrate the plan.

(b) If, at contract completion, or in the case of a commercial products plan, at the close of the fiscal year for which the plan is applicable, the Contractor has failed to meet its subcontracting goals and the Contracting Officer decides in accordance with paragraph (c) of this clause that the Contractor failed to make a good faith effort to comply with its subcontracting plan, established in accordance with the clause in this contract entitled "Small, Small Disadvantage and Women-Owned Small Business Subcontracting Plan," the Contractor shall pay the Government liquidated damages in an amount stated. The amount of probable damages attributable to the Contractor's failure to comply, shall be an amount equal to the actual dollar amount by which

the Contractor failed to achieve each subcontract goal or, in the case of a commercial products plan, that portion of the dollar amount allocable to Government contracts by which the Contractor failed to achieve each subcontract goal.

(c) Before the Contracting Officer makes a final decision that the Contractor has failed to make such good faith effort, the Contracting Officer shall give the Contractor written notice specifying the failure and permitting the Contractor to demonstrate what good faith efforts have been made. Failure to respond to the notice may be taken as an admission that no valid explanation exists. If, after consideration of all the pertinent data, the Contracting Officer finds that the Contractor failed to make a good faith effort to comply with the subcontracting plan, the Contracting Officer shall issue a final decision to that effect and require that the Contractor pay the Government liquidated damages as provided in paragraph (b) of this clause.

(d) With respect to commercial products plans; i.e., company-wide or division-wide subcontracting plans approved under paragraph (g) of the clause in this contract entitled "Small, Small Disadvantaged and Women-Owned Small Business Subcontracting Plan," the Contracting Officer of the agency that originally approved the plan will exercise the functions of the Contracting Officer under this clause on behalf of all agencies that awarded contracts covered by that commercial products plan.

(e) The Contractor shall have the right of appeal, under the clause in this contract entitled Disputes, from any final decision of the Contracting Officer.

(f) Liquidated damages shall be in addition to any other remedies that the Government may have.

REPRESENTATIONS AND CERTIFICATIONS (Acquisition of Leasehold Interests in Real Property)	Solicitation Number GS-05B- 16260	Dated NOV 13 2001

Complete appropriate boxes, sign the form, and attach to offer.

The Offeror makes the following Representations and Certifications. NOTE: The "Offeror," as used on this form, is the owner of the property offered, not an individual or agent representing the owner.

1. 52.219-1 - SMALL BUSINESS PROGRAM REPRESENTATIONS (OCT 1995) (VARIATION)

(a) (1) The standard industrial classification (SIC) code for this acquisition is 6515.

(2) The small business size standard applicable to this acquisition is average annual gross revenues of $15 million or less for the preceding three fiscal years.

(b) *Representations.*

(1) The Offeror represents and certifies as part of its offer that it [ ] is, [X] is not a small business concern.

(2) (Complete only if offeror represented itself as a small business concern in block (b)(1) of this section.) The Offeror represents as part of its offer that it [ ] is, [ ] is not a small disadvantaged business concern.

(3) (Complete only if offeror represented itself as a small business concern in block (b)(1) of this section.) The Offeror represents as part of its offer that it [ ] is, [ ] is not a women-owned small business concern.

(c) *Definitions. Small business concern*, as use in this provision, means a concern, including its affiliates, that is independently owned and operated, not dominant in the field of operation in which it is bidding on Government contracts, and qualified as a small business under the criteria in 13 CFR Part 121 and the size standard in paragraph (a) of this provision.

Small disadvantaged business concern, as use in this provision, means a small business concern that (1) is at least 51 percent unconditionally owned by one or more individuals who are both socially and economically disadvantaged, or a publicly owned business having at least 51 percent of its stock unconditionally owned by an economically disadvantaged individuals, and (2) has its management and daily business controlled by one or more such individuals. This term also means a small business concern that is at least 51 percent unconditionally owned by an economically disadvantaged Indian tribe or Native Hawaiian Organization, or a publicly owned business having at least 51 percent of its stock unconditionally owned by one or more of these entities, which has its management and daily business controlled by members of an economically disadvantaged Indian tribe or Native Hawaiian Organization, and which meets the requirements of 13 CFR Part 124.

Women-owned small business concern, as use in this provision, means a small business concern--

(1) Which is at least 51 percent owned by one or more women or, in the case of any publicly owned business, at least 51 percent of the stock of which is owned by one ore more women; and

(2) Whose management and daily business operations are controlled by one or more women.

(d) *Notice.*

(1) If this solicitation is for supplies and has been set aside, in whole or in part, for small business concerns, then the clause in this solicitation providing notice of the set-aside contains restrictions on the source of the end items to be furnished.

(2) Under 15 U.S.C. 645(d), any person who misrepresents a firm's status as a small or small disadvantaged business concern in order to obtain a contract to be awarded under the preference programs established pursuant to sections 8(a), 8(d), 9, or 15 of the Small Business Act or any other provision of Federal law that specifically references section 8(d) for a definition of program eligibility, shall--

(i) Be punished by imposition of fine, imprisonment, or both;

(ii) Be subject to administrative remedies, including suspension and debarment; and

(iii) Be ineligible for participation in programs conducted under the authority of the Act.

2. 52.204-5 - WOMEN-OWNED BUSINESS (OCT 1995)

(a) *Representation.* The Offeror represents that it [ ] is, [X] is not a women-owned business concern.

(b) *Definition.* "Women-owned business concern," as used in this provision, means a concern which is at least 51 percent owned by one or more; or in the case of any publicly owned business, at least 51 percent of the stock of which is owned by one or more women; and whose management and daily business operations are controlled by one or more women.

INITIALS: _____ & _____
LESSOR GOVERNMENT

3. 52.222-22 - PREVIOUS CONTRACTS AND COMPLIANCE REPORTS (APR 1984)

The Offeror represents that --

(a) It [ ] has, [X] has not participated in a previous contract or subcontract subject either to the Equal Opportunity clause of this solicitation, the clause originally contained in Section 310 of Executive Order No. 10925, or the clause contained in Section 201 of Executive Order No. 11114;

(b) It [ ] has, [X] has not filed all required compliance reports; and

(c) Representations indicating submission of required compliance reports, signed by proposed subcontractors, will be obtained before subcontract awards. (Approved by OMB under Control Number 1215-0072.)

4. 52.222-25 - AFFIRMATIVE ACTION COMPLIANCE (APR 1984)

The Offeror represents that --

(a) It [ ] has developed and has on file, [X] has not developed and does not have on file, at each establishment affirmative action programs required by the rules and regulations of the Secretary of Labor (41 CFR 60-1 and 60-2), or

(b) It [X] has not previously had contracts subject to the written affirmative action programs requirement of the rules and regulations of the Secretary of Labor. (Approved by OMB under Control Number 1215-0072.)

5. 52.222-21 - CERTIFICATION OF NONSEGREGATED FACILITIES (APR 1984)

(a) "Segregated facilities," as used in this provision, means any waiting rooms, work areas, rest rooms and wash rooms, restaurants and other eating areas, time clocks, locker rooms and other storage or dressing areas, parking lots, drinking fountains, recreation or entertainment areas, transportation, and housing facilities provided for employees, that are segregated by explicit directive or are in fact segregated on the basis of race, color, religion, or national origin because of habit, local custom, or otherwise.

(b) By the submission of this offer, the Offeror certifies that it does not and will not maintain or provide for its employees any segregated facilities at any of its establishments, and that it does not and will not permit its employees to perform their services at any location under its control where segregated facilities are maintained. The Offeror agrees that a breach of this certification is a violation of the Equal Opportunity clause in the contract.

(c) The Offeror further agrees that (except where it has obtained identical certifications from proposed subcontractors for specific time periods) it will--

(1) Obtain identical certifications from proposed subcontractors before the award of subcontracts under which the subcontractor will be subject to the Equal Opportunity clause;
(2) Retain the certifications in the files; and
(3) Forward the following notice to the proposed subcontractors (except if the proposed subcontractors have submitted identical certifications for specific time periods).

NOTICE TO PROSPECTIVE SUBCONTRACTORS OF REQUIREMENT FOR CERTIFICATIONS OF NONSEGREGATED FACILITIES.

Certification of Nonsegregated Facilities must be submitted before the award of a subcontract under which the subcontractor will be subject to the Equal Opportunity clause. The certification may be submitted either for each subcontract or for all subcontracts during a period (i.e., quarterly, semiannually, or annually).

NOTE: The penalty for making false statements in offers is prescribed in 18 U.S.C. 1001.
(Approved by OMB under Control Number 1215-0072.)

6. 552.203-4 - CONTINGENT FEE REPRESENTATION AND AGREEMENT (MAY 1989)

(Applies to leases which exceed $100,000 average net annual rental, including option periods.)

(a) Representation. The Offeror represents that, except for full-time bona fide employees working solely for the Offeror or bona fide established real estate agents or brokers maintained by the Offeror for the purpose of securing business, the Offeror --

[Note: The Offeror must check the appropriate boxes. For interpretation of the term "bona fide employee or agency," see paragraph (b) of the Covenant Against Contingent Fees clause.]

(1) [ ] Has, [X] has not, employed or retained any company or persons to solicit or obtain this lease; and
(2) [ ] Has, [X] has not, paid or agreed to pay to any person or company employed or retained to solicit or obtain this contract any commission, percentage, brokerage, or other fee contingent upon or resulting from the award of this contract.

(b) Agreement. The Offeror agrees to provide information relating to the above Representation as requested by the Contracting Officer and, when subparagraph (a)(1) or (a)(2) is answered affirmatively, to promptly submit to the Contracting Officer.--

(1) A completed Standard Form 119, Statement of Contingent or Other Fees, (SF 119); or

INITIALS: LE & CJ
LESSOR GOVERNMENT

(2) A signed statement indicating that the SF 119 was previously submitted to the same contracting office, including the date and applicable solicitation or contract number, and representing that the prior SF 119 applies to this offer or quotation.

7. 52.203-02 - CERTIFICATE OF INDEPENDENT PRICE DETERMINATION (APR 1985)

(Applies to leases which exceed $100,000 average net annual rental, including option periods.)

(a) The Offeror certifies that--

(1) The prices in this offer have been arrived at independently, without, for the purpose of restricting competition, any consultation, communication, or agreement with any other Offeror or competitor relating to (i) those prices, (ii) the intention to submit an offer, or (iii) the methods or factors used to calculate the prices offered;

(2) The prices in this offer have not been and will not be knowingly disclosed by the Offeror, directly or indirectly, to any other Offeror or competitor before bid opening (in the case of a sealed bid solicitation) or contract award (in the case of a negotiated solicitation) unless otherwise required by law; and

(3) No attempt has been made or will be made by the Offeror to induce any other concern to submit or not to submit an offer for the purpose of restricting competition.

(b) Each signature on the offer is considered to be a certification by the signatory that the signatory--

(1) Is the person in the Offeror's organization responsible for determining the prices being offered in this bid or proposal, and that the signatory has not participated and will not participate in any action contrary to subparagraphs (a)(1) through (a)(3) above; or

(2) (i) Has been authorized, in writing, to act as agent for the following principals in certifying that those principals have not participated, and will not participate in any action contrary to subparagraphs (a)(1) through (a)(3) above WILLIAM R. ENLOW, PRESIDENT [insert full name of person(s) in the Offeror's organization responsible for determining the prices offered in this bid or proposal, and the title of his or her position in the Offeror's organization];

(ii) As an authorized agent, does certify that the principals named in subdivision (b)(2)(i) above have not participated, and will not participate, in any action contrary to subparagraphs (a)(1) through (a)(3) above; and

(iii) As an agent, has not personally participated, and will not participate, in action contrary to subparagraphs (a)(1) through (a)(3) above.

(c) If the Offeror deletes or modifies subparagraph (a)(2) above, the Offeror must furnish with its offer a signed statement setting forth in detail the circumstances of the disclosure.

8. 52.203-11 - CERTIFICATION AND DISCLOSURE REGARDING PAYMENTS TO INFLUENCE CERTAIN FEDERAL TRANSACTIONS (APR 1991) (DEVIATION)

(Applies to leases which exceed $100,000.)

(a) The definitions and prohibitions contained in the clause, at FAR 52.203-12, Limitation on Payments to Influence Certain Federal Transactions, are hereby incorporated by reference in paragraph (b) of this certification.

(b) The offeror, by signing its offer, hereby certifies to the best of his or her knowledge and belief that on or after December 23, 1989,--

(1) No Federal appropriated funds have been paid or will be paid to any person for influencing or attempting to influence an officer or employee of any agency, a Member of Congress, an officer or employee of Congress, or an employee of a Member of Congress on his or her behalf in connection with the awarding of a contract resulting from this solicitation.

(2) If any funds other than Federal appropriated funds (including profit or fee received under a covered Federal transaction) have been paid, or will be paid, to any person for influencing or attempting to influence an officer or employee of any agency, a Member of Congress, an officer or employee of Congress, or an employee of a Member of Congress on his or her behalf in connection with this solicitation, the offeror shall complete and submit, with its offer, OMB standard form LLL, Disclosure of Lobbying Activities, to the Contracting Officer; and

(3) He or she will include the language of this certification in all subcontract awards at any tier and require that all recipients of subcontract awards in excess of $100,000 shall certify and disclose accordingly.

(c) Submission of this certification and disclosure is a prerequisite for making or entering into this contract imposed by section 1352, title 31, United States Code. Any person who makes an expenditure prohibited under this provision or who fails to file or amend the disclosure form to be filed or amended by this provision, shall be subject to a civil penalty of not less than $10,000, and not more than $100,000, for each such failure.

9. 52.209-5 - CERTIFICATION REGARDING DEBARMENT, SUSPENSION, PROPOSED DEBARMENT, AND OTHER RESPONSIBILITY MATTERS (MAR 1996)

(Applies to leases which exceed $100,000 average net annual rental, including option periods.)

(a) (1) The Offeror certifies, to the best of its knowledge and belief, that--

(i) The Offeror and/or any of its Principals--

(A) Are [ ] are not [X] presently debarred, suspended, proposed for debarment, or declared ineligible for the award of contracts by any Federal agency;

(B) Have [ ] have [X] not [X], within a three-year period preceding this offer, been convicted of or had a civil judgment rendered against them for: commission of fraud or a criminal offense in connection with obtaining, attempting to obtain, or performing a public (Federal, State, or local) contract or subcontract; violation of Federal or State antitrust statutes relating to the submission of offers; or commission of embezzlement, theft, forgery, bribery, falsification or destruction of records, making false statements, tax evasion, or receiving stolen property; and

(C) Are [ ] are not [X] presently indicted for, or otherwise criminally or civilly charged by a governmental entity with, commission of any of the offenses enumerated in subdivision (a)(1)(i)(B) of this provision.

(ii) The Offeror has [ ] has not [X], within a three-year period preceding this offer, had one or more contracts terminated for default by any Federal agency.

(2) "Principals," for the purposes of this certification, means officers; directors; owners; partners; and, persons having primary management or supervisory responsibilities within a business entity (e.g., general manager; plant manager; head of a subsidiary, division, or business segment, and similar positions).

THIS CERTIFICATION CONCERNS A MATTER WITHIN THE JURISDICTION OF AN AGENCY OF THE UNITED STATES AND THE MAKING OF A FALSE, FICTITIOUS, OR FRAUDULENT CERTIFICATION MAY RENDER THE MAKER SUBJECT TO PROSECUTION UNDER SECTION 1001, TITLE 18, UNITED STATES CODE.

(b) The Offeror shall provide immediate written notice to the Contracting Officer if, at any time prior to contract award, the Offeror learns that its certification was erroneous when submitted or has become erroneous by reason of changed circumstances.

(c) A certification that any of the items in paragraph (a) of this provision exists will not necessarily result in withholding of an award under this solicitation. However, the certification will be considered in connection with a determination of the Offeror's responsibility. Failure of the Offeror to furnish a certification or provide such additional information as requested by the Contracting Officer may render the Offeror nonresponsible.

(d) Nothing contained in the foregoing shall be construed to require establishment of a system of records in order to render, in good faith, the certification required by paragraph (a) of this provision. The knowledge and information of an Offeror is not required to exceed that which is normally possessed by a prudent person in the ordinary course of business dealings.

(e) The certification in paragraph (a) of this provision is a material representation of fact upon which reliance was placed when making award. If it is later determined that the Offeror knowingly rendered an erroneous certification, in addition to other remedies available to the Government, the Contracting Officer may terminate the contract resulting from this solicitation for default.

10. ASBESTOS REPRESENTATION (APR 1996)

The Offeror represents and certifies as part of its offer that the space offered for lease, common building areas, ventilation systems and zones serving the space offered, and the area above suspended ceilings and engineering space in the same ventilation zones as the space offered –

(a) [ ] Does, [X] does not include asbestos-containing materials (ACM). ACM as used in this provision is defined as any materials with a concentration of greater than 1 percent by dry weight of asbestos.

(b) If any of the above areas include ACM, please indicate whether the materials are

(1)	friable	[ ] Yes	[ ] No
(2)	non-friable, in good condition, and located in a place where they are not likely to be disturbed during the term of any ensuing lease contract	[ ] Yes	[ ] No
(3)	in a solid matrix, already in place, and in good condition	[ ] Yes	[ ] No

11. CERTIFICATION FOR PAST OR PRESENT HAZARDOUS WASTE OPERATIONS (NOV 1987)

To the best of his or her knowledge, the Offeror represents and certifies, as part of the offer that the site upon which space is offered for lease to the Government –

(a) [ ] Was, [X] was not a site used for any of the operations listed in item b below.

(b) Was a site used for any or all of the following operations:

(1)	generation of hazardous waste	[ ] Yes	[X] No
(2)	treatment, temporary/permanent storage, or disposal of solid or hazardous waste	[ ] Yes	[X] No
(3)	storage of hazardous substances or petroleum products	[ ] Yes	[X] No
(4)	used/waste oil storage or reclamation units	[ ] Yes	[X] No
(5)	laboratory or rifle range	[ ] Yes	[X] No
(6)	chemical manufacturing/storage	[ ] Yes	[X] No
(7)	military or intelligence weapons or ammunition training or testing	[ ] Yes	[X] No
(8)	ordnance and/or weapons production, storage, or handling	[ ] Yes	[X] No

INITIALS: _____ & _____
LESSOR GOVERNMENT

(c) If any of the above operations [redacted] occurred at the site, the Offeror certifies th[redacted] appropriate cleanup or other action [ ] was, [ ] was not performed in [redacted]ccordance with the local, state and Federal lav[redacted]

12. 52.223-5 - CERTIFICATION REGARDING A DRUG-FREE WORKPLACE (JUL 1990)

(Applies to leases which exceed $100,000 average net annual rental, including option periods.)

(a) Definitions. As used in this provision, "Controlled substance" means a controlled substance in schedules I through V of section 202 of the Controlled Substances Act (21 U.S.C. 812) and as further defined in regulation at 21 CFR 1308.11-1308.15.

"Conviction" means a finding of guilt (including a plea of nolo contendere) or imposition of sentence, or both, by any judicial body charged with the responsibility to determine violations of the Federal or State criminal drug statutes.

"Criminal drug statutes" means a Federal or non-Federal criminal statute involving the manufacture, distribution, dispensing, possession or use of any controlled substance.

"Drug-free workplace" means the site(s) for the performance of work done by the Contractor in connection with a specific contract at which employees of the Contractor are prohibited from engaging in the unlawful manufacture, distribution, dispensing, possession, or use of a controlled substance.

"Employee" means an employee of a Contractor directly engaged in the performance of work under a Government contract. Directly engaged is defined to include all direct cost employees and any other Contractor employee who has other than a minimal impact or involvement in contract performance.

"Individual" means an Offeror/contractor that has no more than one employee including the Offeror/contractor.

(b) By submission of its offer, the Offeror, if other than an individual, who is making an offer that equals or exceeds $25,000, certifies and agrees that, with respect to all employees of the Offeror to be employed under a contract resulting from this solicitation, that, no later than 30 calendar days after contract award (unless a longer period is agreed to in writing), for contracts of 30 calendar days or more performance duration, or as soon as possible, for contracts of less than 30 calendar days performance duration, but in any case, by a date prior to when performance is expected to be completed, it will -

(1) Publish a statement notifying its employees that the unlawful manufacture, distribution, dispensing, possession, or use of a controlled substance is prohibited in the contractor's workplace and specifying the actions that will be taken against employees for violations of such prohibition;

(2) Establish an ongoing drug-free awareness program to inform such employees about -
   (i) The dangers of drug abuse in the workplace;
   (ii) The contractor's policy of maintaining drug-free workplace;
   (iii) Any available drug counseling, rehabilitation, and employee assistance programs; and
   (iv) The penalties that may be imposed upon employees for drug abuse violations occurring in the workplace.

(3) Provide all employees engaged in performance of the contract with a copy of a statement required by subparagraph (b)(1) of this clause;

(4) Notify such employees in writing in the statement required by subparagraph (b)(1) of this provision that, as a condition of continued employment on the contract resulting from this solicitation, the employee will -
   (i) Abide by the terms of the statement; and
   (ii) Notify the employer in writing of the employee's conviction under a criminal drug statute for a violation occurring in the workplace no later than 5 calendar days after such conviction;

(5) Notify the contracting officer in writing within 10 calendar days after receiving notice under subdivision (b)(4)(ii) of this provision, from an employee or otherwise receiving actual notice of such conviction. The notice shall include the position and title of the employee; and

(6) Within 30 calendar days after receiving notice under subdivision (b)(4)(ii) of this provision of a conviction, take one of the following actions with respect to any employee who is convicted of a drug abuse violation occurring in the workplace:
   (i) Taking appropriate personnel action against such employee, up to and including termination; or
   (ii) Require such employee to satisfactorily participate in a drug abuse assistance or rehabilitation program approved for such purposes by a Federal, State, or local health law enforcement, or other appropriate agency.

(7) Make a good faith effort to maintain a drug-free workplace through implementation of subparagraph (b)(1) through (b)(6) of this clause.

(c) By submission of its offer, the Offeror, if an individual who is making an offer of any dollar value, certifies and agrees that the Offeror will not engage in the unlawful manufacture, distribution, dispensing, possession, or use of a controlled substance in the performance of this contract resulting from this solicitation.

(d) Failure of the Offeror to provide the certification required by paragraph (b) or (c) of this provision, renders the Offeror unqualified and ineligible for award. (See FAR 9.104-1(g) and 19.602-1(a)(2)(i).)

(e) In addition to other remedies available to the Government, the certification in paragraphs (b) or (c) of this provision concerns a matter within the jurisdiction of an agency of the United States and the making of a false, fictitious, or fraudulent certification may render the maker subject to prosecution under Title 18, United States Code, Section 1001.

INITIALS: _____ & _____
LESSOR GOVERNMENT

13. 52.204-3 - TAXPAYER IDENTIFICATIO[illegible]EP 1989) (VARIATION)

(a) The Offeror is required to submit taxpayer identification information in order to comply with reporting requirements of 26 U.S.C. 6041, 6041A, and 6050M and implementing regulations issued by the Internal Revenue Service (IRS). Failure or refusal by the Offeror to furnish the information may result in a 20 percent reduction of payments otherwise due under the contract. Taxpayer information on the payee, if different from the offeror, is also required; however, it may be provided at the time of award.

(b) Offeror's Taxpayer Identification Number (TIN).

[x] TIN: (b) (4) [redacted]. [ ] TIN has been applied for. [ ] TIN is not required.

(c) Corporate Status.

[X] Corporation; [ ] Not a corporate entity; [ ] Sole proprietorship [ ] Partnership

(d) Common Parent.

"Common parent," as used in this solicitation provision, means that corporate entity that owns or controls an affiliated group of corporations that files its Federal income tax returns on a consolidated basis, and of which the Offeror is a member.

[X] Offeror is not owned or controlled by a common parent.
[ ] Name and TIN of common parent: Name _____ TIN _

(e) Payee's Taxpayer Identification Number.

[ ] TIN: _____. [ ] TIN has been applied for. [ ] TIN is not required.

14. OFFEROR'S DUNS NUMBER (APR 1996)

Enter number, if known: _____

OFFEROR OR AUTHORIZED REPRESENTATIVE	Name and Address (Including ZIP Code) (b) (6) [redacted] Signature	Telephone Number 217-544-1144 NOVEMBER 5, 2001 Date

INITIALS: [signature] & [signature]
LESSOR GOVERNMENT

GENERAL SERVICES ADMINISTRATION
PUBLIC BUILDINGS SERVICE

LESSOR'S ANNUAL COST STATEMENT
IMPORTANT - Read attached "Instructions"

GS-05B-16260

1. RENTABLE AREA (SQ. FT.)	3A. ENTIRE BUILDING	3B. LEASED BY GOVT
43,600	43,600	43,600

4. BUILDING NAME AND ADDRESS (No., street, city, state, and zip code)
St. Andrew's Building, Northeast Corner of 6th & Capitol Streets, Springfield, Illinois
(No street number assigned)

SECTION I - ESTIMATED ANNUAL COST OF SERVICES AND UTILITIES FURNISHED BY LESSOR AS PART OF RENTAL CONSIDERATION

SERVICES AND UTILITIES	LESSOR'S ANNUAL COST FOR (a) ENTIRE BUILDING	(b) GOVT-LEASED AREA	FOR GOVERNMENT USE ONLY (c)
A. CLEANING, JANITOR AND/OR CHAR SERVICE			
5. SALARIES	Not included		
6. SUPPLIES (Wax, cleansers, cloths, etc.)	Not included		
7. CONTRACT SERVICES (Window washing, waste and snow removal)	Not included		
B. HEATING			
8. SALARIES	Not included		
9. FUEL (Check one) ☐ OIL ☐ GAS ☐ COAL ☐ ELECTRIC	Not included		
10. SYSTEM MAINTENANCE AND REPAIR	(b) (4) [redacted]		
C. ELECTRICAL			
11. CURRENT FOR LIGHT AND POWER (Including elevators)	Not included		
12. REPLACEMENT OF BULBS, TUBES, STARTERS	Included in item 10		
13. POWER FOR SPECIAL EQUIPMENT	Not included		
14. SYSTEM MAINTENANCE AND REPAIR (Ballasts, fixtures, etc.)	Included in item 10		
D. PLUMBING			
15. WATER (For all purposes) (Include sewage charges)	(b) (4) [redacted]		
16. SUPPLIES (Soap, towels, tissues not in 6 above)	Not included		
17. SYSTEM MAINTENANCE AND REPAIR	Included in item 10		
E. AIR CONDITIONING			
18. UTILITIES (Include electricity, if not in C11)	Not included	SAME AS (a)	
19. SYSTEM MAINTENANCE AND REPAIR	Included in item 10		
F. ELEVATORS			
20. SALARIES (Operators, starters, etc.)	Not included		
21. SYSTEM MAINTENANCE AND REPAIR	(b) (4) [redacted]		
G. MISCELLANEOUS (To the extent not included above)			
22. BUILDING ENGINEER AND/OR MANAGER	[redacted]		
23. SECURITY (Watchmen, guards, not janitors)	Not included		
24. SOCIAL SECURITY TAX AND WORKMEN'S COMPENSATION INSURANCE	Included in item 22		
25. LAWN AND LANDSCAPING MAINTENANCE	(b) (4) [redacted]		
26. OTHER (Explain on separate sheet) Snow Removal			
27. TOTAL		$	$

SECTION II - ESTIMATED ANNUAL COST O[redacted]CLUSIVE OF CAPITAL CHARGES

28. REAL ESTATE TAXES	[redacted]		
29. INSURANCE (Hazard, liability, etc.)			
30. BUILDING MAINTENANCE AND RESERVES FOR REPLACEMENT			
31. LEASE COMMISSION			
32. MANAGEMENT			
33. TOTAL			$

LESSOR'S CERTIFICATION - The amounts entered in Columns (a) and (b) represent my best estimate as to the annual costs of services, utilities and ownership.

34. SIGNATURE OF ☐ OWNER ☐ LEGAL AGENT

TYPED NAME AND TITLE	SIGNATURE	DATE
34A. William R. Enlow, President	34 (b) (6) [redacted]	34C. November 5, 2001
35A. St. Andrew's Building Corporation	35B.	35C.

GSA OC 55-2051

GSA FORM 1217 JUL 94

ATTACHMENT II

GSA BUILDING FOR U.S. ATTORNEY'S OFFICE
6TH AND CAPITAL STRUCTURAL STEEL STRUCTURE

BASED UPON HORN & ASSOCIATES REV. 3 LAYOUT DATED 6/7/99

	PHASE 3
GENERAL CONDITIONS	[redacted]
EXCAVATION AND SITE UTILITIES	
CONCRETE	
MASONRY	
METALS	
CARPENTRY	
ROOFING	
DOORS AND WINDOWS	
FINISHES	
Bullet Resistive FRP credit	
SPECIALTIES	
WINDOW TREATMENT	
ELEVATORS	
SPRINKLERS	
PLUMBING	
HVAC	
ELECTRICAL	
SUBTOTAL	
DESIGN FEES	
SUBTOTAL	
FINANCING COSTS	
SUBTOTAL	
Attachment 2 Changes	
Ventilation Filtration Change	
Electrical Light Switch Change	
TOTAL	(b) (4)

LESSOR: WKS

GOV'T: [signature]

Rec'd 10-2-01 Work OK - at fuel glance 4 PB

GENERAL DECISION IL010004 09/28/01 IL4
General Decision Number IL010004

Superseded General Decision No. IL000004

State: Illinois

Construction Type:
BUILDING
RESIDENTIAL

County(ies):
SANGAMON

BUILDING & RESIDENTIAL CONSTRUCTION PROJECTS (including single family homes and garden apartments up to and including 4 stories

Modification Number	Publication Date
0	03/02/2001
1	03/09/2001
2	04/06/2001
3	05/04/2001
4	06/01/2001
5	06/29/2001
6	08/03/2001
7	08/24/2001
8	09/07/2001
9	09/28/2001

COUNTY(ies):
SANGAMON

ASBE0999A 01/01/1994

	Rates	Fringes
ASBESTOS WORKERS:	18.99	2.76

BOIL0363A 01/01/2001

	Rates	Fringes
BOILERMAKERS	24.20	11.33

BRIL0004C 05/01/1997

	Rates	Fringes
BRICKLAYERS, STONE MASON & POINTERS, CLEANERS AND CAULKERS	21.52	5.05

CARP0016C 05/01/2001

	Rates	Fringes
CARPENTERS & LATHERS	21.66	10.09
PILEDRIVERS	22.16	10.09
MILLWRIGHTS	23.45	8.76
RESIDENTIAL: CARPENTERS	15.51	9.59

CARP1051F 05/01/2001

	Rates	Fringes

LESSOR: WKR

GOV'T: [signature]

MILLWRIGHTS	23.45	8.76

ELEC0193B 06/01/1999

	Rates	Fringes
SANGAMON COUNTY		
ELECTRICIANS, RESIDENTIAL (3 floors or less)	14.10	3.30+3.5%

ELEC0193E 06/01/2001

	Rates	Fringes
SANGAMON COUNTY		
ELECTRICIANS:		
Wireman	27.32	6.05+3%
Cable Splicer	27.32	6.05+3%

ELEV0092B 05/01/2001

	Rates	Fringes
ELEVATOR MECHANICS	25.725	7.195 + A&B

FOOTNOTES:
a. Paid Holidays: New Year's Day; Memorial Day; Independence Day; Labor Day; Thanksgiving Day; Day after Thanksgiving; & Christmas Day.
b. Employer contributes 8% of regular hourly rate to vacation pay credit for employee who has worked in business more than 5 yrs; Employer contributes 6% of regular hourly rate to vacation pay credit for employee who has worked in business less.

---

* ENGI0965C 05/01/2001

	Rates	Fringes
SANGAMON COUNTY:		
POWER EQUIPMENT OPERATORS:		
GROUP 1:	24.40	8.35
GROUP 2:	22.15	8.35
GROUP 3:	18.65	8.35

PREMIUM PAY-CRANES WITH BOOMS- 90-149 ft. .50 per hour; 150 ft. and up- .75 per hour; MULTIPLE UNIT MACHINES- 1.00 per hour; UNDERGROUND WORK- .50 per hour; UNDER AIR PRESSURE- .50 per hour; LONG BOOMS ON STATIONARY TOWER CRANES-1.00 per hour.

Hazardous Waste/Asbestos Removal Workers receive the following wages and fringe benefits:

Level A (highest level of respiratory, skin, and eye protection) receives $2.00 per hour above journeyman.

Level B (same as Level A, but a lower level of skin protection) receives $1.50 per hour above journeyman.

Level C (same as Level B, but a lower level of respiratory protection) receives $1.00 per hour above journeyman.

LESSOR: _____

GOV'T: _____

POWER EQUIPMENT OPERATORS CLASSIFICATIONS

GROUP 1:
Asphalt Plant Engineer; Asphalt screed man; Apsco concrete spreader; Asphalt paver; Asphalt roller on bituminous concrete; Athey loaders; Cableways; Cherry Picker; ClamShell; C.M.I. & Similar Type Autograde Formless Paver,Autgrade Placer & Finisher; Concrete Breaker;Concrete plant Oper; Concrete Pumps; Cranes;

Derricks;Derrick boats; Draglines; Earth auger boring machine, Elevating Graders; Engineers on dredge; Gravel processing machines;Head equipment greaser;High lift or fork lift;Hoist with two drums or 2 or more loadlines; Locomotive;Mechanics; Motor graders or auto patrols; Operators or levelman on dredges; Power boat oper; Pug mill oper; (Asphalt plat); Orange peels; Overhead cranes; Paving mixer; Piledrivers; Pipe wraper & Painting machines; Push dozers, or Push cats; Rock crusher; Ross carrier or similar machine; Scoops; Skimmers 2 cu yd capacity & Under; Sheep foot roller (self propelled);Shovels; Skimmer; Scoops; Test hole drilling machines; Tower machine; Tower mixer; Track Tupe & Loaders; Track type forklifts or high lifts; Track jacks & Tampers; Trackors; Sideboom; Trenching machine; Ditching machine; Tunnel lugger; Wheel type and loader; Winch cat; Scoops (Allor tournapull)

GROUP 2:
Asphalt booster & Heater; Asphalt distributor; Asphalt plant fireman;Building Elevator; Bull float or flexplane; Concrete finshing machine; Concrete saw, self propelled; Concrete spreader machine; Gravel or stone spreader, Power operated; Hoist automatic; Hoist with one drum & one load line; Oiler on 2 paving mixers when used in tandem boom or winch truck; Post hole diggers;
Mechanical; Road or street sweeper, Self-propelled; Scissors hoist; Seaman tiller; Straw machine; Vibratory compactor; Well drill machine; & Mud jacks.

GROUP 3:
Air compressor, Track or self-propelled; Bulk cement batching-plants; Conveyors; Concrete miers (Except Plant,Paver,Tower) Firement, Generators; Greasers; Light plants; Mechanical theater; Oilers; Power from graders; Power sub-grader; Pug mill, When used other than asphalt operation; Rollers (Except bitumin ous); Tractors w/o Power attachments regardless of size or type; Truck crane oiler; & driver (one man); Vibratory hammer; Wat er pump; Welding machine (one 300 amp or over) Combinations of five of any air-compressors; Conveyors, Welding Machines, Water pumps; Light plants or Generators shall be in batteries or with in 300 FT.

IRON0046H 05/01/2001

	Rates	Fringes
IRONWORKERS	21.83	10.37

LABC0477C 05/01/2001

	Rates	Fringes
LABORERS:		
GROUP 1	20.98	7.60
GROUP 2	21.18	7.60
GROUP 3	21.33	7.60

LESSOR: WHS
GOV'T: CJ

GROUP 4	22.33	7.60
RESIDENTIAL LABORER	70%	2.05

LABORERS CLASSIFICATIONS

GROUP 1 - COMMON - All sewer workers plus depth pay; Asbestos abatement; Asphalt plant laborers; Bankmen on Floating plant; Batch dumpers; Carpenter tender; Cleaning lumber; Cofferdam workers plus depth pay; Deck hand, Dredge hand & shore laborer; Dispatchers; Driving of stakes; Stringlines for all machinery; Fencing laborer; Firemen or salamander tenders; Fireproofing; Flagmen; Form handlers; Gravel box men, Dumpmen & Spotters; Hazardous Waste Worker; Janitors; Laborers with dewatering systems; Material Checkers and handlers; Pit men; Plastic installers; removal of trees; Rip-rap men; Scaffold workers; Tool cribmen; Track laborers; Unloading explosives; Unloading & carrying lath; Unloading & carrying rebars; Wrecking, Dismantling buildings; Wallmen & housemovers; Wrecking Laborers.

GROUP 2 - SEMI-SKILLED - Asphalt workers with machine; Asphalt raker & layer; Cement handler; Cement silica, Clay, Fly ash; Lime & plasters, handlers (bulk or bag); Chain saw; Chloride handler; Concrete workers (wet); Grade checker; Handling material treated with oil, creosote, asphalt or any foreign material harmful to skin or clothing; Kettle tar men; on concrete paving, placing, cutting & typing of reinforcing; Signal man on crane; Tank cleaner; Tunnel tenders in free air.

GROUP 3 - SKILLED - Air tamping hammerman; Caisson workers plus depth pay; Concrete burning machine operator; Concrete saw; coring machine; Curb asphalt machine operator; Gunnite nozzle men; Jackhammer & drill operators; Laborers handling masterplate or similar materials; Laborers tending masons with hot material or where foreign materials are used; Laser Beam Operator; Layout man and/or Tile Layer; Lead Man on Sewer Work; Luteman; Mason Tenders; Mortar Mixer Operators; Motorized buggies or motorized unit used for wet concrete or handling of building materials; Multiple concrete duct- leadman; Plasterer tender; Ready Mix Scalemen; Screedman on Asphalt Pavers; Steel Form Setters (street and highway); Vibrator Operators; Welders, Cutters, Burners, Torchmen

GROUP 4 - Dynamite Man

MARB0004C 05/01/1997

	Rates	Fringes
MARBLE SETTERS, TERRAZZO WORKERS & TILE SETTERS	21.52	5.05

MARB0109B 05/01/1993

	Rates	Fringes
MARBLE AND TILE FINISHER	18.65	
TERRAZZO FINISHER AND		
FLOOR MACHINE	18.80	
TERRAZZO BASE MACHINE	18.55	

PAIN0090C 05/01/2000

LESSOR: WKG
GOV'T:

	Rates	Fringes
RESIDENTIAL:		
BRUSH, SPRAY, ROLLERS, & TAPING	20.19	5.68

PAIN0090D 05/01/2000

	Rates	Fringes
SANGAMON COUNTY:		
PAINTERS:		
BRUSH, SPRAY, ROLLER & TAPING	22.69	5.68
SANDBLASTING	23.69	5.68

PAIN1168B 05/01/1999

	Rates	Fringes
GLAZIER	23.65	2.62

PLAS0059B 05/01/2000

	Rates	Fringes
PLASTERERS	22.55	8.20

PLAS0539C 05/01/2001

	Rates	Fringes
CEMENT MASONS	20.40	9.48

PLUM0137B 08/01/2001

	Rates	Fringes
OBUMBERS, PIPEFITTERS & STEAMFITTERS		
COMMERCIAL	27.80	8.05
RESIDENTIAL UP TO & INCLUDING 3 STORIES	22.74	6.10

ROOF0112C 06/01/2001

	Rates	Fringes
ROOFERS	21.35	7.80

SFIL0669A 04/01/2001

	Rates	Fringes
SPRINKLER FITTERS	29.04	6.00

SHEE0218B 06/01/1999

	Rates	Fringes
SHEET METAL WORKERS		
RESIDENTIAL	15.22	8.22

SHEE0218C 06/01/1999

	Rates	Fringes
SHEET METAL WORKERS		
BUILDING	23.42	9.22

LESSOR: WKS

GOV'T:

TEAM0001G 05/01/2001

SANGAMON COUNTY:	Rates	Fringes
TRUCK DRIVERS:		
GROUP 1	23.19	4.36+a
GROUP 2	23.59	4.36+a
GROUP 3	23.79	4.36+a
GROUP 4	24.04	4.36+a
GROUP 5	24.79	4.36+a

FOOTNOTE: a-$85.00 per week.

GROUP I
1. Drivers on 2 Axle Trucks Hauling Less Than 9 Tons. Air Compressor and Welding Machines & Brooms, Including Those Pulled by Separate Units, Warehousemen, Greasers & Tiremen, Pickup Trucks When Hauling Material, Tools, or Men to and From & on the Job Site, & Fork Lifts up to 6,000 LB. Capacity.

GROUP II
1. Two or Three Axle Trucks Hauling more than 9 Ton But Hauling less than 16 Ton, A-Frame Winch Trucks, Hydrolift Trucks, or Similar Equipment When Used For Transportation Purposes. Fork Lifts Over 6,000 LB. Capacity, Winch Trucks, & Four Aale Combination Units.
2. In the event the employer desires to use ticket writers that classification shall come under group II.

GROUP III
1. Two, Three or Four Axle Trucks Hauling 16 Ton or more, Drivers on Water Pulls, Mechanics & Working Foremen Selected Mutually by the Employer & The Local Union, Subject to Layoff as Utlined in Article 4, Section (M), Will Be Used when there are orders to be issued by other than the company supervisor. Five Axle or more Combination Units.
2. In The Event The Employer Desires to Use Dispatchers, That Classification Shall Come Under GROUP III.

GROUP IV
1. Lowboy & Oil Distributors.

GROUP V:
Drivers who require special protective clothing while employed on hazardous waste work.

WELDERS - Receive rate prescribed for craft performing operation to which welding is incidental.

==========

Unlisted classifications needed for work not included within the scope of the classifications listed may be added after award only as provided in the labor standards contract clauses (29 CFR 5.5(a)(1)(v)).

In the listing above, the "SU" designation means that rates listed under that identifier do not reflect collectively bargained wage and fringe benefit rates. Other designations indicate unions whose rates have been determined to be prevailing.

WAGE DETERMINATION APPEALS PROCESS

LESSOR: WRS
GOV'T:

1.) Has there been an initial decision in the matter? This can be:

* an existing published wage determination
* a survey underlying a wage determination
* a Wage and Hour Division letter setting forth a position on a wage determination matter
* a conformance (additional classification and rate) ruling

On survey related matters, initial contact, including requests for summaries of surveys, should be with the Wage and Hour Regional Office for the area in which the survey was conducted because those Regional Offices have responsibility for the Davis-Bacon survey program. If the response from this initial contact is not satisfactory, then the process described in 2.) and 3.) should be followed.

With regard to any other matter not yet ripe for the formal process described here, initial contact should be with the Branch of Construction Wage Determinations. Write to:

Branch of Construction Wage Determinations
Wage and Hour Division
U. S. Department of Labor
200 Constitution Avenue, N. W.
Washington, D. C. 20210

2.) If the answer to the question in 1.) is yes, then an

interested party (those affected by the action) can request review and reconsideration from the Wage and Hour Administrator (See 29 CFR Part 1.8 and 29 CFR Part 7). Write to:

Wage and Hour Administrator
U.S. Department of Labor
200 Constitution Avenue, N. W.
Washington, D. C. 20210

The request should be accompanied by a full statement of the interested party's position and by any information (wage payment data, project description, area practice material, etc.) that the requestor considers relevant to the issue.

3.) If the decision of the Administrator is not favorable, an interested party may appeal directly to the Administrative Review Board (formerly the Wage Appeals Board). Write to:

Administrative Review Board
U. S. Department of Labor
200 Constitution Avenue, N. W.
Washington, D. C. 20210

4.) All decisions by the Administrative Review Board are final.

END OF GENERAL DECISION

LESSOR: _____

GOV'T: _____

CERTIFICATE OF PROCUREMENT INTEGRITY

1. I, Harvey M. Stephens (Name of certifier), am the officer or employee responsible for the preparation of this offer and hereby certify that to the best of my knowledge and belief, with the exception of any information described in this certificate, I have no information concerning a violation or possible violation of subsections 27(a), (b), (d) or (f) of the Office of Federal Procurement Policy Act, as amended * (41 U.S.C. 423), hereinafter referred to as "the Act"), as implemented in the FAR, occurring during the conduct of this procurement 65-05B-16260 (solicitation number).

2. As required by subsection 27(e) (1) (B) of the Act, I further certify that, to the best of my knowledge and belief, each officer, employee, agent, representative, and consultant of St. Andrews Building Corp. (Name of Offeror) who has participated personally and substantially in the preparation or submission of this offer has certified that he or she is familiar with, and will comply with, the requirements of subsection 27(a) of the Act, as concerning a violation or possible violation of the Act, as implemented in the FAR, pertaining to this procurement.

3. Violations or possible violations: (Continue on plain bond paper if necessary, and label Certificate of Procurement Integrity, "Continuation Sheet"). ENTER "NONE" IF NONE EXISTS.

None

4. I agree that, if awarded a contract under this solicitation, the certifications required by subsection 27(e) (1) (B) of the Act shall be maintained in accordance with paragraph (f) of this provision.

(b) (6) [redacted]

Signature of officer or employee responsible for offer

10/31/01
Date

Harvey M. Stephens
Typed name of officer or employee responsible for offer

*Section 27 became effective on December 1, 1990.

THIS CERTIFICATION CONCERNS A MATTER WITHIN THE JURISDICTION OF AN AGENCY OF THE UNITED STATES, AND THE MAKING OF A FALSE, FICTITIOUS OR FRAUDULENT CERTIFICATION MAY RENDER THE MAKER SUBJECT TO PROSECUTION UNDER TITLE 18, UNITED STATES CODE, SECTION 1001.

LESSOR: WHS

GOV'T:

GENERAL SERVICES ADMINISTRATION PUBLIC BUILDINGS SERVICE **SUPPLEMENTAL LEASE AGREEMENT**	SUPPLEMENTAL AGREEMENT NO. 1	DATE
	TO LEASE NO. GS-05B-16260	

ADDRESS OF PREMISES

Single–Tenant Office Building
Northeast corner of 6th & Capital Streets
Springfield, Illinois

THIS AGREEMENT, made and entered into this date by and between

St. Andrew's Building Corporation
whose address is 831 East Monroe Street
Springfield, Illinois 62701

hereinafter called the Lessor, and the UNITED STATES OF AMERICA, hereinafter called the Government:

WHEREAS, the parties hereto desire to amend the above lease.

NOW THEREFORE, these parties for the considerations hereinafter mentioned, covenant and agree that the said lease is amended, effective December 7, 2001, as follows:

Supplemental Lease Agreement No. 1 is hereby issued to amend the lease agreement in accordance with the Government's final revised space layout drawings. Therefore, Attachment A to Standard Form 2, paragraph Nos. 20 (b) and 22 and "Special Requirements (Exhibits)" are amended as follows:

Special Requirements

- Page Nos. 2 and 3, Exhibit A, are deleted and replaced with attached Page Nos. 2A and 3A.
- Page No. 13, Exhibit E, is deleted and replaced with attached page No. 13A.
- Page No. 19, Exhibit F, is removed and replaced with attached page Nos. 19A and 19B.

Supplemental Lease Agreement No.1 continues on page 2 of 2.

All other terms and conditions of the lease shall remain in force and effect. Supplemental Lease Agreement (SLA) No. 1 consists of twelve (16) pages: SLA 2 pages; exhibits totaling 5 pages; Appendix H totaling 6 pages; and Appendix I totaling 4 pages.
IN WITNESS WHEREOF, the parties subscribed their names as of the above date.

LESSOR: St. Andrew's Building Corporation

(b) (6) [redacted]

BY [redacted] (Signature) (Title)

(b) (6) [redacted]

IN [redacted] (Signature) (Address)

UNITED (b) (6) [redacted] NISTRATION

BY CLAIR JONES (Signature) Contracting Officer (Official Title)

GSA DC 68-1176 (5PEEM computer generated form:JAN 92) GSA FORM 276 JUL 67/FEB 92

INITIALS: _____ & _____
LESSOR GOVERNMENT

Attachment A

20. (b) It is mutually understood that the Government's required space alteration changes such as those listed below, as well as any subsequent alterations or space changes, will be accomplished as a change order(s) and/or amendment to the lease.

1. a. Special Requirements, dated June 3, 1997, to Solicitation for Offers No. GS-05B-16260, page No. 50 of 57, paragraph entitled "Room: ADP Room Size: 200 Square Feet" is hereby amended to read "Room: ADP Room, Size: 400 Square Feet" of the lease. The preceding space change will result in the Government incurring an additional cost of $(b) (4) [redacted] for operating equipment. The Government must approve all required additional equipment.

b. A 6-inch raised floor is required in the ADP (computer) Room for cable management. Coming into the door there should be a 5' x 5' landing prior to a 4' wide ramp. For the computer equipment the Government requires a minimum of 4 dedicated isolated, clean, ground, quad outlets, which are reflected on the Government's final revised design intent drawings. CAT 5 data cable(s) will be used in the room. Important: The separate air conditioning requirement for the ADP Room will still require a separate temperature and humidity control.

2. The U.S. Attorneys' "Locking Hardware Specification EOUSA/SPS," dated October 19, 2001, supersedes the applicable security hardware standards outlined in the Special Requirements, dated June 3, 1997, of the lease agreement 's Solicitation for Offers No. GS-05B-16260. See attached Appendix H entitled "Locking Hardware Specification EOUSA/SPS."

3. The Lessor will disconnect, relocate and reinstall the U.S. Attorneys' sound system, cameras, and special media lights from their present space in Conference Room 4B in the Paul Findley U.S. Courthouse, located at 600 East Monroe Street, Springfield, Illinois, to the Attorneys' designated room(s) in the new single-tenant office building. All equipment must be fully operational upon relocation.

Upon the Government's acceptance of the Lessor's costs for the preceeding changes, the Contracting Officer or his/her designated representative will issue written authorization(s) to provide the space changes. It is mutually understood that the monies paid by the Government will be for actual changes completed for buildout of the Government's space which are accepted by the Government. All costs incurred by the Lessor will be mutually agreed upon and be paid by lump sum payment(s) to the Lessor in accordance with the terms of the lease agreement.

22.1 See attached Appendix I, GSA letter dated October 18, 2000, page Nos. 1 through 4.

Lessor _____ Government _____

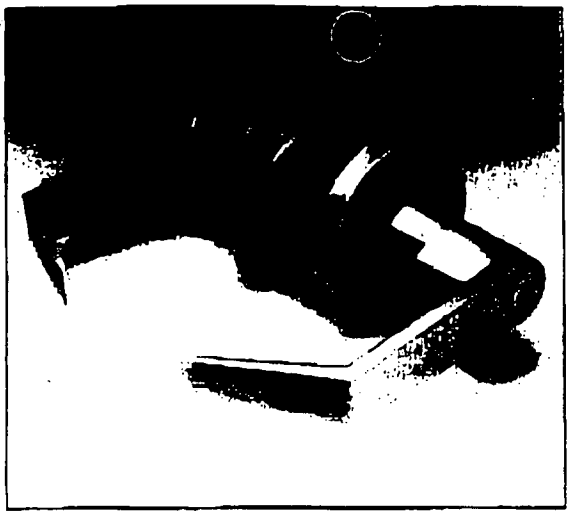

EXHIBIT A

Embassy Lever Lockset™

The Medeco Interchangeable Core Cylindrical Lever Lockset is ideal for commercial applications, requiring the specification of only one type of door hardware which has already been assembled with a lock cylinder. The Medeco heavy-duty lockset is the high security answer to a demand for a complete locking system which can be masterkeyed and key controlled. It is provided with the Medeco BIAXIAL® high security cylinder, both patented and UL-Listed. It conforms to ANSI Specification A 156.2, 4000 Grade 1, and can be installed on all doors prepared to ANSI Specification A 115.2. It serves a variety of functions, such as an entrance lock, classroom lock, store room lock and apartment lock.

- Available in the following finishes: Bright Brass (605), Satin Brass (606), Satin Bronze (612), Oil Rubbed Bronze (613), Bright Chrome (625) and Satin Chrome (626).
- All levers are available with an optional abrasive coating in compliance with ANSI Specification A 117.1.
- Rugged construction with independent lever return springs to prevent lever sag.
- May be used to retrofit existing bored locksets with a 2¾" backset.

LESSOR: _____

GOV'T: _____

Lockset Functions

EXHIBIT A

Privacy Lock
Function 01
- For lavatory or other privacy doors.
- Either lever operates latchbolt unless outside lever is locked by pushbutton inside.
- Button automatically releases when inside lever is turned or door is closed.
- A coin inserted and turned in emergency slot will unlock door from outside.
- Inside lever always active.

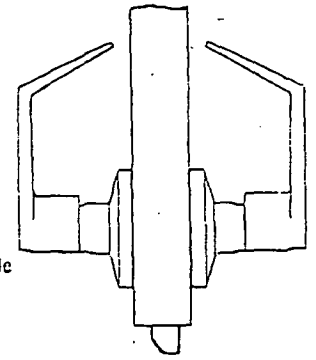

Passage Latch
Function 02
- For doors that do not require locking.
- Either lever operates latch bolt at all times.

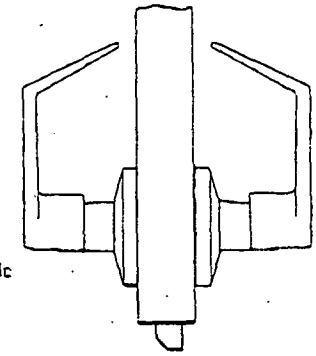

Entrance Lock
Function 03
- For entrance, general home or office doors.
- Deadlocking latchbolt.
- Either lever operates latchbolt. (Except when outside lever is locked from inside).*
- Pushing turn button in inside lever locks outside lever. (Automatically releases when inside lever is turned or key is rotated in locked outside lever).
- Outside lever may be retained in locked position by pushing and rotating turn button 90° clockwise to a horizontal position; not released until turn button is manually returned to the vertical position.
- Latchbolt is operated by key in outside lever or by rotating inside lever.
- Inside lever always active.

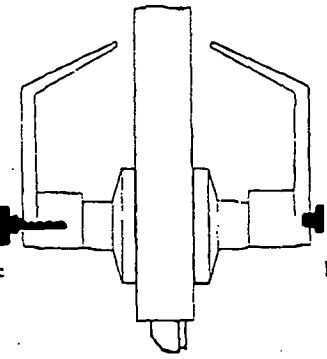

Classroom Lock
Function 04
- For classroom or utility room doors.
- Deadlocking latchbolt.
- Either lever operates latchbolt (except when outside lever is locked by key).*
- Inside lever always active.
- Key releases outside lever.

LESSOR: _____

GOV'T: _____

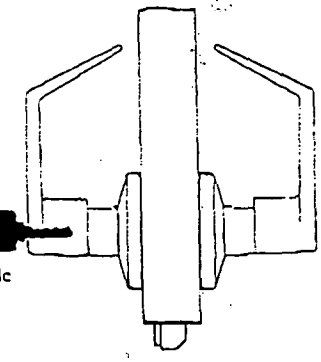

* Lever handles are free wheeling when in locked position.

EXHIBIT E

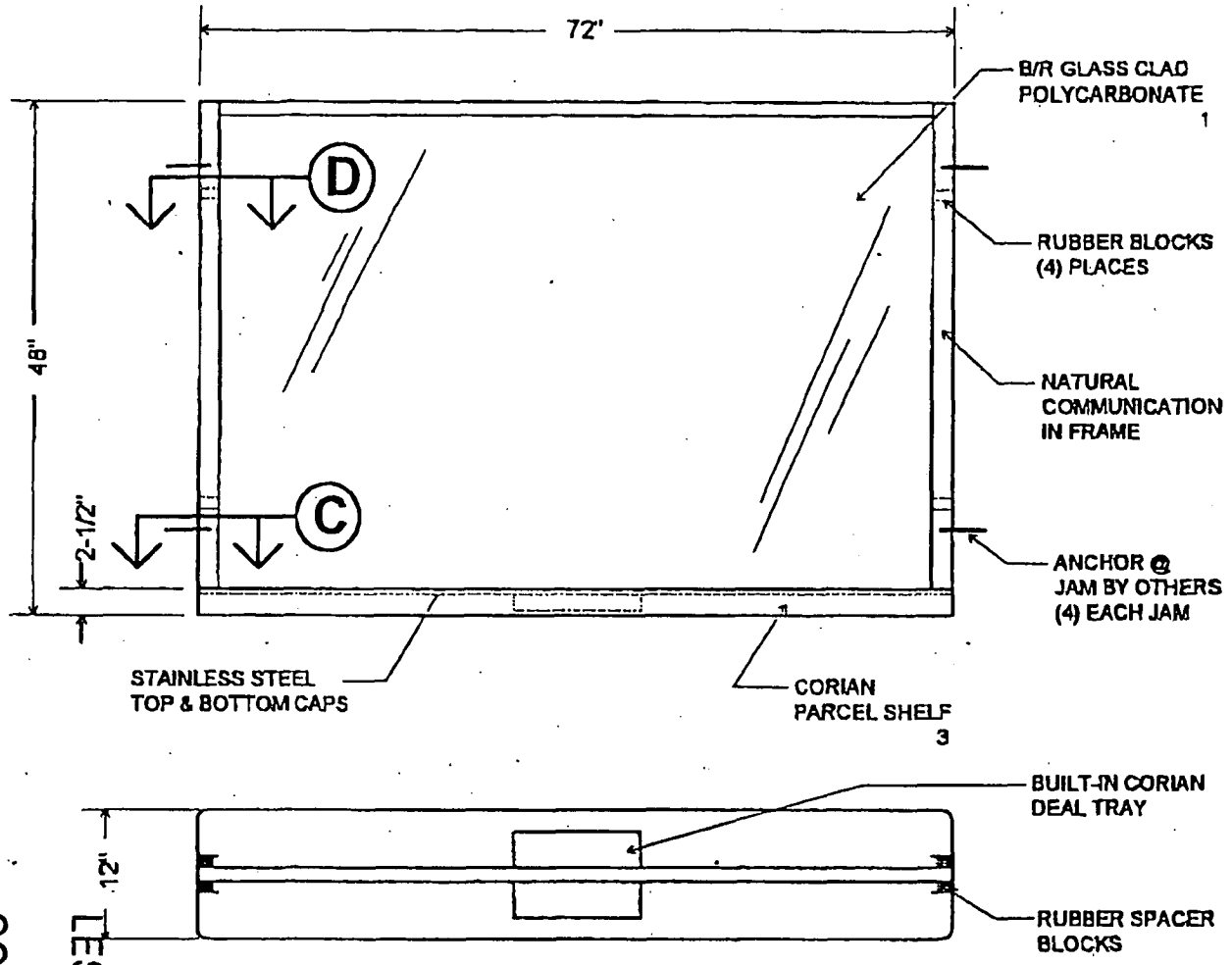

NOTES

1. PERFORMANCE LEVEL: LEVEL (6)
2. REQUIRED FINISHED OPENING 72-1/4" X 48-1/4"
3. PROVIDE CORIAN FAMILY AND COLOR FOR COUNTER
4. UPRIGHTS MADE FROM 10 GA. #3 BRUSHED STAINLESS STEEL

SHOTGARD NVTW 7248 NATURAL VOICE TRANSACTION WINDOW WITH CORIAN COUNTER

LESSOR: _____

GOV'T: _____

NORTH AMERICAN BULLET PROOF (210) 225-0982 FAX (210) 225-0984	
JOB: U.S. ATTORNEY STANDARD NVTW TRANSACTION WINDOW	
SCALE: 3/4"=1'	DRAWN BY: G. GILSON
DATE: 4/27/98	DRAWING NUMBER: USATT#9

DOOR TYPICAL B
Single Perimeter Door, Ballistic
Out-Swinging

See Component specifications and or Statement of Work for details.

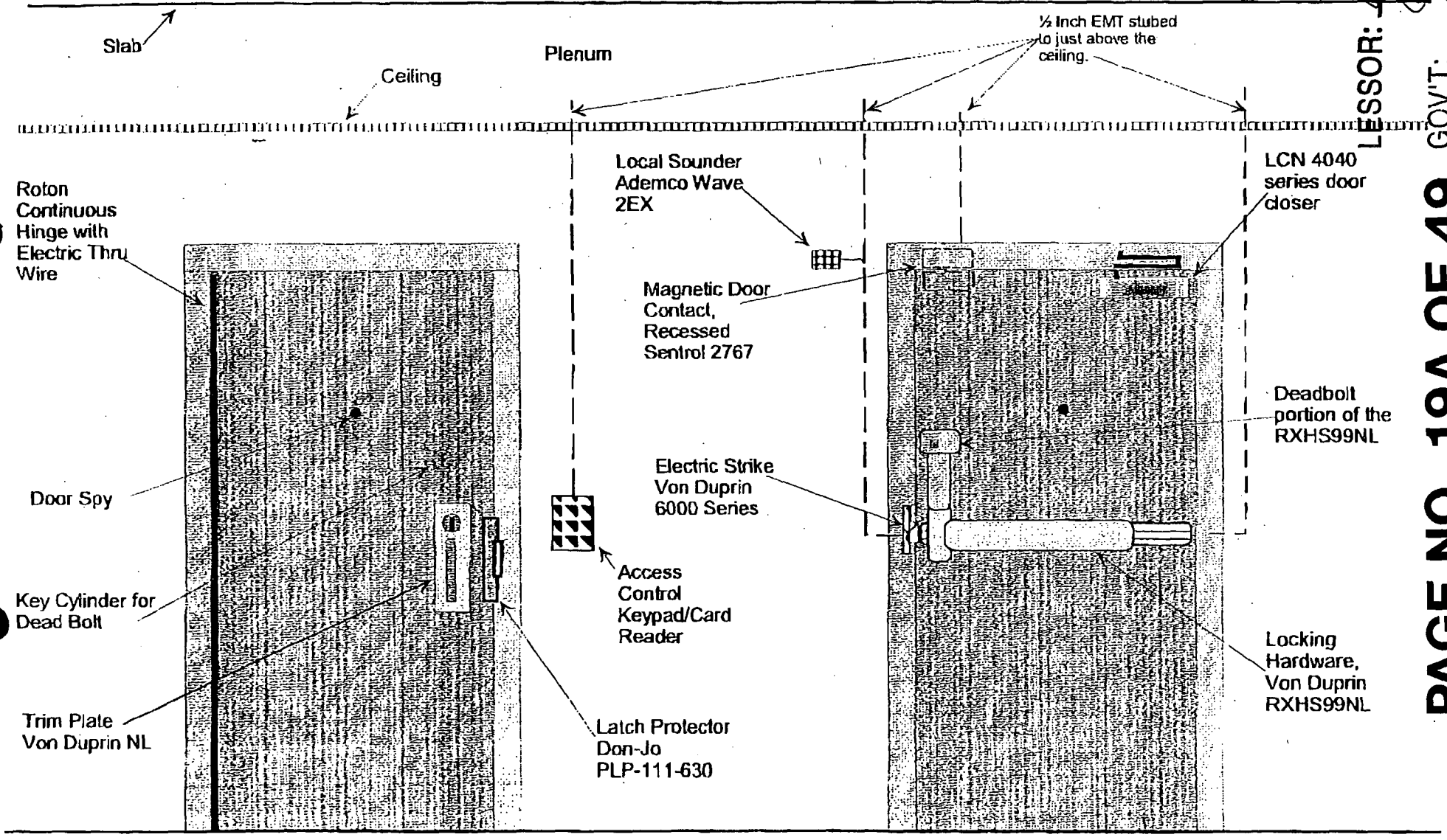

— — — — — ½ inch EMT stubbed to above ceiling.

All hardware and access control devices should be mounted at standard ADA hight unless otherwise specified.

EXHIBIT F

LESSOR: GOV'T:

EXHIBIT F

From: Manuel Montaño
Sent: Thursday, November 1, 2001 11:00 AM
To: Clair Jones, GSA

Subject: Ballistic door Specifications for USAO

BALLISTIC DOOR: A ballistic door, UL752, Class 6 rated, with frame, hinge, and locking hardware. By North American model WDR 3684 (single) or WDR7284 (double) door available from North American Bulletproof, San Antonio, TX. The following locking hardware is included as part of a ballistic door when ordered from North American:

- Mechanical Door Closer, LCN 4040 series.
- Door Release Device, Von Duprin HSRX99NL - with Medeco key over ride, biaxial keyway, removable cylinder, factory restricted key, level 7.
- Electric Strike, fail secure, Von Duprin 6000 series high security electric strike.
- Continuous Hinge, Roton Model 780-112HD.
- Magnetic Door Contacts, Sentrol 2757D High Security.
- In Door Viewing Device, Door Spy.

Latch Protector, Don-Jo Mfg. PLP-211-BP for out-swinging doors.

Door Typical B.wpg

LESSOR: _____

GOV'T: _____

EXHIBIT H

Locking Hardware Specification
EOUSA/SPS

The following information can be applied to perimeter doors, as specified, to secure the United States Attorneys Office space. All perimeter doors shall be out swinging from the USAO.

Waiting area door from public space:

The door leading into the USAO waiting area from public space shall be fitted with building standard locking hardware, keyed to the USAO key schedule.

All doors leading off the USAO public waiting area:

All doors leading off the USAO public waiting area will be out swinging and be ballistic with the following specifications.

A ballistic door, UL752, Class 6 rated, with ballistic frame, continuous hinge, and high security locking hardware. Such as a North American model WDR 3684 (single) or WDR7284 (double) door available from North American Bullet Proof, San Antonio, TX. The following locking hardware is included as part of a ballistic door package, along with the intrusion detection alarm contacts, when ordered from North American Bullet Proof:

- Mechanical Door Closer, LCN 4040 series.
- Door Release Device, Von Duprin HSRX99NL - with Medeco key over ride, biaxial keyway, removable cylinder, factory restricted key, level 7.
- Electric Strike, fail secure, Von Duprin 6000 series high security electric strike.
- Continuous Hinge, Roton Model 780-112HD.
- Magnetic Door Contacts, Sentrol 2767D High Security.
- In Door Viewing Device, Door Spy.
- Latch Protector, Don-Jo Mfg. PLP-211-BP for out-swinging doors.

Single Perimeter Door:

All single perimeter doors shall be solid wood or metal clad with no windows or vents, out swinging from the USAO secure space and secured with a high security single motion egress rim type device with an automatic deadbolt, fire rated. The exit device must work with specific electronic access control system card readers, keypads and shall have a request to exit switch incorporated in the mechanism. Electrical connections to this switch shall be via an electric wire transfer hinge, with the wire channeled through the door. The deadbolt shall have the ability to

LESSOR: _____

GOV'T: _____

allow the latch to be held retracted for card/keypad access operation and released when a higher level of security is required. This high security exit device shall provide single motion egress by depressing a pushpad, regardless of the locked or unlocked condition of the deadbolt. This exit device shall be equipped with a key over ride on both the deadbolt and exit device. Typical operation shall be; the automatic deadbolt would be first unlocked and latched using a key. The exit device would then be unlocked by a separate operation using a key or access code or card. The high security exit device shall be equipped with Medeco removable cores, keyed with factory restricted keyways, level 7. The door shall be prepped to accept a Sentrol 2767 recessed high security alarm contact located at the top non hinged side of the door.

Double Perimeter Doors:

All double perimeter doors shall solid wood doors with no windows or vents, be secured with a high security single motion egress rim type device with an automatic deadbolt, fire rated. The working side of the double door shall be equipped with an exit device that shall work with specific electronic card readers, keypads and shall have a request to exit switch incorporated in the mechanism. Electrical connections to this switch shall be via an electric wire transfer hinge. The deadbolt shall have the ability to allow the latch to be held retracted for card/keypad access operation and released when a higher level of security is required. This high security exit device shall provide single motion egress by depressing a pushpad, regardless of the locked or unlocked condition of the deadbolt. This exit device shall be equipped with a key over ride on both the deadbolt and exit device. Typical operation shall be; the automatic deadbolt would be first unlocked and latched using a key. The exit device would then be unlocked by a separate operation using a key or access code or card. The high security exit device shall be equipped with Medeco removable cores, keyed with factory restricted keyways, level 7. The door shall be prepped to accept a Sentrol 2767 recessed high security alarm contact located at the top non hinged side of the door.

The fixed side of the double door shall be secured with surface mounted sliding deadbolts located at the top and bottom of the non hinged side of the leaf. These deadbolts shall incorporate a four pin tumbler cylinder operated by cut keys. The deadbolt shall have the ability to be secured

in either the locked or unlocked position. The door shall be prepped to accept a Sentrol 2767 recessed high security alarm contact located at the top non hinged side of the door.

Electric Strikes:

All electric strikes shall be manufactured to work in conjunction with the specified emergency exit device and shall be rated High Security. The electric strike shall be rim mounted on the door frame to provide remote release of the locked door. The electric strike shall allow the door to be opened without retracting the latchbolt by releasing the electric strike lip, sometimes called keeper or gate. When the door closes the beveled latchbolt rides over the lip and falls into the electric strike pocket securing the door. The electric strike shall be all stainless steel construction, non-handed and available in 24VDC. The strike shall be furnished fail secure (FSE) standard, with fail safe (FS) optional, field changeable. The Strike box shall be adjustable to compensate for any misalignment of the door or frame. Connectors shall be furnished for ease of installation and removal.

Computer Room Door:

The doors leading into the computer room shall be equipped with a push button combination lockset. The lock shall be ADA -compliant lever handles with a key over ride. The keyway shall be set to USAO standard key schedule.

Secure Storage Room (Secure File Room):

The secure file room door shall be equipped with a GSA approved 3 position Combination Deadbolt lock, such as a Sargent & Greenleaf 8415 black spin dial lock with an SM50 butterfly latch. The lock shall have the life safety kit, 8400-001 installed. This combination deadbolt lock shall be in addition to the USAO standard passage set. The door shall be prepped to accept a Sentrol 2767 recessed high security alarm contact located at the top non hinged side of the door.

LESSOR: _____

GOV'T: _____

Stairwell Doors:

Stairwell doors shall meet fire code requirements, be solid wood or metal clad with no windows or vents. Shall be out swinging from the USAO secure space and secured with a high security single motion egress rim type device with lever action outside trim electrically controlled. This device shall be standard as fail safe (FS) and shall be field convertible for fail secure (FSE) operation. For fail safe operation, when power is off, the outside trim is unlocked. The outside trim shall have the ability to be relocked by reapplying electrical power. When a water flow is detected by the fire alarm system, the outside trim will fail safe (FS)for emergency ingress when required by the fire code. The exit device shall maintain a latched condition when power is lost or interrupted. The exit device must work with specific electronic card readers, keypads and cut keys and shall have a request to exit switch incorporated in the mechanism. Electrical connection to the REX switch and outside trim shall be via an electric wire transfer hinge, with the wire channeled through the door. This high security exit device shall provide single motion egress by depressing a pushpad. This exit device shall be equipped with a key over ride, utilizing Medeco removable cores, keyed with factory restricted keyways, level 7. The door shall be prepped to accept a Sentrol 2767 recessed high security alarm contact located at the top non hinged side of the door.

In Swinging Doors:

All single perimeter doors shall be solid wood or metal clad with no windows or vents. In swinging doors to the USAO secure space shall be secured with a Medeco Embassy Lockset, configured to storeroom function. The lockset shall be fitted with Medeco Biaxial cylinders, removalbe core, keyed alike to the other perimeter doors, factory restricted level 7. The Lock set device must work with specific electronic access control system card readers, keypads and shall have a request to exit switch incorporated in the mechanism. Electrical connections to this switch shall be via an electric wire transfer hinge, with the wire channeled through the door. The door shall also have a Medeco Maxum deadbolt, model D-11 to be utilized if a failure occurs to the electronic access control system. The door shall be prepped to accept a Sentrol 2767 recessed high security alarm contact located at the top non hinged side of the door.

LESSOR: _____

GOV'T: _____

Locking Hardware Specification
EOUSA/SPS

DOOR RELEASE DEVICE: A security grade emergency door release device with a key over ride. VonDuprin HSRX99NL with Medeco Biaxial keyway, removable cylinder, key should be factory restricted level 7.

FIRE STAIRWELL DOOR RELEASE DEVICE: An Electric rim device with remote unlocking capabilities. Outside trim is lever action, electric locking. This device must remain latched in the fail safe (FS) condition. The Von Duprin RXEL99 exit device is recommended.

DEAD BOLT LOCK: A Medeco Model D-11 series, MAXUM dead bolt utilizing a Medeco Biaxial Keyway, removable cylinder. The keyway must be factory restricted level 7.

ELECTRIC STRIKE: A high security electric strike such as a Von Duprin 6112 for use with new installations. For double doors the Von Duprin 6121. These electric strikes will work in conjunction with the VonDuprin HS99 series emergency door release device.

PUSH BUTTON COMBINATION LOCK: A mechanical push button combination lock such as a Unican L1000.

LOCK SET: A Medeco Embassy Model 19 classroom or storeroom function lever cylinder lock set with Medeco removable core, Finish 605.

SECURITY HINGES: Heavy duty commercial hinges with non removable pins. The hinge-pin must be secured with a set screw or peened over so the hinge-pin can not be removed from the threat side of the door.

ELECTRIC TRANSFER HINGE: Power transfer hinge, 12 or 24 bolts per circuit. Four or six wire available, such as Hager Companies, ETW Electric Through-Wire Only Hinge, BB1279.

SPIN DIAL COMBINATION DEAD BOLT LOCK: A GSA approved 3 position Combination Deadbolt lock, such as a Sargent & Greenleaf 8415 black spin dial lock with a SM50 butterfly latch.

IN-DOOR VIEWING DEVICE: An in-door viewing device such as a DoorScope available from DoorScope Security, Omaha, NE or equivalent. Locate as indicated on the floor plans attached.

LATCH PROTECTOR: A latch protector available from Don-Jo Mfg. Sterling, MA, 978-422-3377. See cut sheets to specify exact style/model.

LESSOR: _____

GOV'T: _____

Locking Hardware Specification
EOUSA/SPS

POWER TRANSFER LOOP: Power transfer loop. 5/16" diameter flexible metal tube. Von Duprin DL-7 or EPT-2.

LESSOR: _____

GOV'T: _____

EXHIBIT I

October 18, 2000

Mr. William R. Enlow, Esq.
Enlow, Sorling, Northrup and Cullen
Attorneys at Law
607 East Adams; Suite 800
Springfield, Illinois 62701

Re: Solicitation for Offer
No. GS-05B-16260

Dear Mr. Enlow:

This confirms our meeting of September 18, 2000 and subsequent telephone conversations of September 21, 2000 and October 17, 2000 concerning the St. Andrew's Building Corporation's offer in response to the General Services Administration's (GSA) Solicitation for Offer for the U.S. District Attorney's space requirement in downtown Springfield, Illinois.

Over the past several months we have had numerous discussions pertaining to issues that were of concern to both GSA and yourself regarding the St. Andrew's Building Corporation's offer. After much deliberation, we are amending the Government's solicitation to incorporate such changes. Additional changes have also been incorporated executing the recently issued Presidential Executive Order 13123 - Greening the Government through Efficient Energy Management, and Executive Order 13101 - Greening the Government through Waste Prevention, Recycling, and Federal Acquisition. Enclosed are the following amendments to GSA's Solicitation for Offers package:

- Amendment No. 1, dated 10/16/00, to General Clauses, GSA Form 3517
- Amendment No. 2, dated 10/16/00, to Solicitation for Offers
- Amendment No. 3, dated 10/16/00, to Solicitation for Offers, GSA Form 3517, for Solicitation for Offers No. GS-0B-1620 – Executive Orders 13123 & 13101

Therefore, please review and initial the page of each amendment and included them in your amended offer.

LESSOR: _____

GOV'T: _____

Since issuing the Solicitation for Offers for the U.S. Attorneys, the Government has instituted a Design Excellence Program regarding any new construction, either federally-owned or commercially leased buildings, that will house a single tenant or multi-tenant Federal agencies. This program is necessary due to the fact that any single or multi-tenants facility housing only federal agencies are viewed by the public as a U.S. Government owned facility. On September 10, 2000 a conference call was conducted with Mr. John Blythe of John – Blythe Construction Company, the builder for the U.S. Attorney's facility and Mr. Robert P. Theel of GSA's Property Development Division and myself concerning the building's architectual design and construction materials. I have listed below Mr. Theel's findings:

- The size and placement of the last bay of windows is a concern. The steady rhythm of windows along the West (?) facade is interrupted at the last bay, apparently due to some structural considerations made to allow the most efficient use of column spacing and beam size combined with lateral bracing. The facade could be enhanced significantly in a number of ways. A double window in the end bay could provide the "finish" to the façade, or more classically inspired detailing surrounding the window in that bay might be another solution. There are quite a few historic examples of this type of treatment. For instance, look at the attached image of the Chicago Women's Athletic Club. See attachment. The second story windows are arched and the treatment of the facade details around the end bay window is different than the main facade. This is a very similar situation as another Government proposal, but the current facade does not distinguish this "ending" of the window rhythm sufficiently. This could possibly be done better with some minimal limestone/brick detailing surrounding the windows in the last bay.

  A review session with the developer/architect/constructor shall be required before the fabrication and final detailing of these pieces.

- Another concern is the sill height of the first floor windows with relation to the sidewalk on the same West (?) elevation. The elevational drawing I have is not clear on the distance between the sidewalk (which slopes up from the entrance) and the window sill. It appears it may be less than two feet. Is this a code issue? It may be a safety hazard to pedestrians who could fall into the window. Please look into the ramifications, if any, and advise.

LESSOR: _____

GOV'T: _____

Please ensure the St. Andrew's Building Corporation's amended offer is based on the Government's amended requirements and address in writing the above Government finding.

Please feel free to contact me on (312) 353-1037 if you have any questions pertaining to this matter.

Thank you for your continued cooperation.

Sincerely,

(b) (6)

[redacted]

10-18-00

CLAIR JONES
Realty Specialist
Property Acquisition
and Realty Services Division

Enclosures

OPTIONAL FORM 99 (7-90)

FAX TRANSMITTAL

# of pages ▶ 3

To BARRY HINES	From CLAIR JONES
Dept./Agency ATTORNEY	Phone # (312) 353-1037
Fax # (817) 544-5225	Fax # (312) 886-9513

NSN 7540-01-317-7368 5099-101 GENERAL SERVICES ADMINISTRATION

cc: JOHN-BLYTHE

LESSOR: _____

GOV'T: _____

LESSOR: _____

GOV'T: _____

GENERAL SERVICES ADMINISTRATION
PUBLIC BUILDINGS SERVICE
SUPPLEMENTAL LEASE AGREEMENT

SUPPLEMENTAL AGREEMENT	DATE
NO. 2	
TO LEASE NO. GS-05B-16260	

ADDRESS OF PREMISES Single Tenant Office Building
318 South 6th Street
Springfield, IL 62701

THIS AGREEMENT, made and entered into this date by and between

St. Andrew's Building Corporation
whose address is 831 East Monroe Street
Springfield, IL 62701

hereinafter called the Lessor, and the UNITED STATES OF AMERICA, hereinafter called the Government:

WHEREAS, the parties hereto desire to amend the above Lease.

NOW THEREFORE, these parties for the consideration hereinafter mentioned covenant and agree that the said Lease is amended, effective **May 7, 2002**, as follows:

Supplemental Lease Agreement No. 2 is hereby issued to reflect the approved change orders as listed below:

1. HVAC equipment at the increased ADP room (liebert unit):
2. The proposed cost for the six-inch raised floor:
3. The proposed cost for the ballistic material and bullet resistant doors to the second floor waiting room number 201:
4. Millwork in rooms 209, 210, 325, 228, 233, 243 and 354:
5. Markerboards in rooms 329, 330, 235, 236, 238, 319 and 342:
6. Relocation of existing sound system, cameras and special media lights:
7. Relocation of U.S. Atty's existing shelving:
8. Automatic projection screen in room 314:
9. Storage room door in room 233C:
10. The locking hardware changes
11. Front entry door card reader/electric strike

(b) (4) [redacted]

TOTAL

All other terms and conditions of the lease shall remain in force and effect.

IN WITNESS WHEREOF, the parties subscribed their names as of the above date.

LESSOR St. Andrew's Building Corporation

BY _____ (Signature) _____ (Title)

IN PRESENCE OF

_____ (Signature) _____ (Address)

UNITED STATES OF AMERICA GENERAL SERVICES ADMINISTRATION

BY DEBORAH D. ORKOWSKI (Signature) Contracting Officer (Official Title)

GENERAL SERVICES ADMINISTRATION
PUBLIC BUILDINGS SERVICE
SUPPLEMENTAL LEASE AGREEMENT

SUPPLEMENTAL AGREEMENT	DATE
NO. 3	11.1.02
TO LEASE NO. GS-05B-16260	

ADDRESS OF PREMISES Single Tenant Office Building
318 South 6th Street
Springfield, IL 62701

THIS AGREEMENT, made and entered into this date by and between

St. Andrew's Building Corporation
whose address is 831 East Monroe Street
Springfield, IL 62701

hereinafter called the Lessor, and the UNITED STATES OF AMERICA, hereinafter called the Government:

WHEREAS, the parties hereto desire to amend the above Lease.

NOW THEREFORE, these parties for the consideration hereinafter mentioned covenant and agree that the said Lease is amended, effective **October 1, 2002**, as follows:

Supplemental Lease Agreement No. 3 is hereby issued to reflect the approved change orders as listed below:

1. Carpet Upgrade – Furnish and install Bentley Aries Blue, #7616 With Roppe P139, navy blue vinyl base:
2. Dome Pendant Light Fixtures in Main Conference Media Room:

TOTAL (b) (6) [redacted]

The total number of light fixtures in Main Conference Room will be amended to reflect the actual number of light fixtures installed in the room. There will be total number of 36 light fixtures installed in the Main Conference Room, this number of light fixtures will replace the total number requested in the special requirements section of the SFO for the Main Conference Room.

All other terms and conditions of the lease shall remain in force and effect.

IN WITNESS WHEREOF, the parties subscribed their names as of the above date.

LESSOR St. Andrew's Building Corporation

(b) (4), (b) (6) [redacted]

BY

IN PRES

(Signature)

Pres
(Title)

Springfield Illinois
(Address)

UNITED STATES OF AMERICA GENERAL SERVICES ADMINISTRATION

(b) (6) [redacted]

BY DEBORAH D. ORKOWSKI
(Signature)

Contracting Officer
(Official Title)

GENERAL SERVICES ADMINISTRATION
PUBLIC BUILDINGS SERVICE
SUPPLEMENTAL LEASE AGREEMENT

SUPPLEMENTAL AGREEMENT	DATE
NO. 4	11-25-02
TO LEASE NO. GS-05B-16260	

ADDRESS OF PREMISES Single Tenant Office Building
318 South 6th Street
Springfield, IL 62701

THIS AGREEMENT, made and entered into this date by and between

St. Andrew's Building Corporation
whose address is 831 East Monroe Street
Springfield, IL 62701

hereinafter called the Lessor, and the UNITED STATES OF AMERICA, hereinafter called the Government:

WHEREAS, the parties hereto desire to amend the above Lease.

NOW THEREFORE, these parties for the consideration hereinafter mentioned covenant and agree that the said Lease is amended, effective **November 14, 2002**, as follows:

Supplemental Lease Agreement No. 4 is hereby issued to reflect the approved change orders as listed below:

Room 333: Add vinyl wall covering and carpet the room over the existing VCT
Room 225: Add new VCT floor (carpet from this room is moved to Room 333

TOTAL (b) [redacted]

All other terms and conditions of the lease shall remain in force and effect.

IN WITNESS WHEREOF, the parties subscribed their names as of the above date.

LESSOR St. Andrew's Building Corporation

(b) (6) [redacted]

BY _____ Treasurer
(Title)

IN PRESENCE [redacted]
(Signature)

205 S. 5th St, Suite 700 Springfield IL 62701
(Address)

UNITED STATES OF AMERICA GENERAL SERVICES ADMINISTRATION

(b) (6) [redacted]

BY DEBORAH D. ORKOWSKI 11-25-02
(Signature)

Contracting Officer
(Official Title)

GENERAL SERVICES ADMINISTRATION PUBLIC BUILDINGS SERVICE SUPPLEMENTAL LEASE AGREEMENT	SUPPLEMENTAL AGREEMENT NO. 5	DATE
	TO LEASE NO. GS-05B-16260	

ADDRESS OF PREMISES Single Tenant Office Building
318 South 6th Street
Springfield, IL 62701

THIS AGREEMENT, made and entered into this date by and between

St. Andrew's Building Corporation
whose address is 831 East Monroe Street
Springfield, IL 62701

hereinafter called the Lessor, and the UNITED STATES OF AMERICA, hereinafter called the Government:

WHEREAS, the parties hereto desire to amend the above Lease.

NOW THEREFORE, these parties for the consideration hereinafter mentioned covenant and agree that the said Lease is amended, effective **November 22, 2002**, as follows:

Supplemental Lease Agreement No. 5 is hereby issued to reflect the actual effective date of the lease and to add notification language to the lease contract. Accordingly, Paragraph 2. of the lease is deleted and the following Paragraph 2. is substituted in lieu thereof, and Paragraph 30 will be an additional Paragraph to the Attachment A in the Standard Form 2:

2. The Government shall have and hold said premises with their appurtenances for the term commencing upon substantial completion. The effective date of this lease is November 22, 2002, and ending on November 21, 2017, subject to termination and renewal rights as may be herein set forth.

CONTINUED ON PAGE 2

All other terms and conditions of the lease shall remain in force and effect.

IN WITNESS WHEREOF, the parties subscribed their names as of the above date.

LESSOR St. Andrew's Building Corporation
BY (b) (6) [redacted] President
(Title)
IN P [redacted] 607 E. Adams, Suite 800
Springfield, IL 62701
(Address)

UNITE [redacted] NISTRATION
BY DEBORAH D. OKROWSKI 12-27-02
(Signature)
Contracting Officer
(Official Title)

GENERAL SERVICES ADMINISTRATION PUBLIC BUILDINGS SERVICE SUPPLEMENTAL LEASE AGREEMENT	SUPPLEMENTAL AGREEMENT NO. 6	DATE 6-13-11
	TO LEASE NO. GS-05B-16260	

ADDRESS OF PREMISES

Single Tenant Office Building
318 South 6th Street
Springfield, Illinois 62701

THIS AGREEMENT, made and entered into this date by and between

St. Andrew's Building Corporation

831 East Monroe Street

whose address **Springfield, Illinois 62701**

hereinafter called the Lessor, and the UNITED STATES OF AMERICA, hereinafter called the Government: WHEREAS, the parties hereto desire to amend the above Lease.

NOW THEREFORE, these parties for the consideration hereinafter mentioned covenant and agree that the said Lease is amended effective **March 1, 2011.**

Supplemental Lease Agreement No. 6 is hereby issued to amend the lease agreement to indicate that the lease agreement has no "Base Year" for tax purposes. Therefore, Paragraph 3.4 titled "Tax Adjustment" is hereby deleted in its entirety and replaced as follows:

TAX ADJUSTEMENT, GSAR 552-270-24 (AUG 1992)

(a) The Government shall make a lump sum payment to cover its share of real estate taxes. The amount of payment shall be based upon the submission of proper invoice(s), including paid tax receipt/statements/bills, from the Lessor to the Leasing Contracting Officer. The due date for making payment shall be the 30th day after receipt of the invoice by the Leasing Contracting Officer or the 30th day after the anniversary date of the Lease, whichever is later. If the invoice submitted does not meet the requirements of a proper invoice, it will be returned to the Lessor within 7 days of receipt. The Government will be responsible for payment only if the receipts are submitted within 60 calendar days of the date the payment is due.

Continue on Page 2 of 2

All other terms and conditions of the lease shall remain in force and effect. Supplemental Lease Agreement No. 6 consists of 2 pages.
IN WITNESS WHEREOF, the parties subscribed their names as of the above date.

LESSOR: ST. ANDREW'S BUILDING CORPORATION

(b) (6) [redacted]

BY [redacted] its President
(*Title*)

IN PRE[redacted] P.O. Box 5131
607 E. Adams, Suite 800
Springfield, IL 62705
(*Address*)

UNITED [redacted] ADMINISTRATION

BY [redacted] **Leasing Contracting Officer**
(*Signature*) (*Official Title*)

(b) The Government's share of the tax increase will be based on the ratio of the rentable square feet occupied by the Government to the total rentable square feet in the building. If the Government's lease terminates before the end of the calendar year, payment will be based on the percentage of the year in which the Government occupied space. The payment will not include penalties for non- pay or delay in payment. If there is any variance between the assessed value of the Government's space or other space in the building, the Government may adjust the basis for determining its share of the tax increase.

(c) The Government may contest the tax assessment by initiating legal proceedings on behalf of the Government and the Lessor or the Government alone. If the Government is precluded from taking legal action, the Lesor shall contest the assessment upon reasonable notice by the Government. The Government shall reimburse the Lessor for all costs and shall execute all document required for the legal proceedings. The Lessor shall agree with the accuracy of the documents. The Government shall receive its share of any tax refund. If the Government elects to contest the tax assessment, payment under paragraph (a) of this clause shall become due on the first workday of the second month following the conclusion of the appeal proceedings.

(d) In the event of any decreases in real estate taxes occurring during the term of occupancy under the lease to a rate below the first year, payment for taxes will be reduced accordingly. The amount of such reductions will be determined in the same manner as increase provided under paragraph (a) of this clause.

The Leasing Contracting Officer represents the General Services Administration as an agent with the authority to enter into the lease on behalf of the Government, and executes this document in his or her official duty only, and not as an individual.

GOVERNMENT_____ **LESSOR** _____

Initial **Initial**

GENERAL SERVICES ADMINISTRATION PUBLIC BUILDINGS SERVICE LEASE AMENDMENT	LEASE AMENDMENT No. 7 TO LEASE NO. GS-05B-16260
ADDRESS OF PREMISES Single Tenant office Building 318 South 6th Street Springfield, Illinois 62701-1915	PDN Number:

THIS AGREEMENT, made and entered into this date by and between: **ST. ANDREW'S BUILDING CORPORATION** whose address is: **831 East Monroe Street, Springfield, IL 62701-1915,** hereinafter called the Lessor, and the **UNITED STATES OF AMERICA**, hereinafter called the Government:
WHEREAS, the Lessor and Government entered into the original Lease on November 13, 2001;
WHEREAS, Supplemental Lease Agreement (SLA) 1 was issued to amend paragraphs 20 (b) and 22 "Special Requirements (Exhibits)";
WHEREAS, Supplemental Lease Agreement (SLA) 2 was issued to approve change orders in the amount of (b) (4) [redacted]
WHEREAS, Supplemental Lease Agreement (SLA) 3 was issued to approve change orders in the amount of [redacted]
WHEREAS, Supplemental Lease Agreement (SLA) 4 was issued to approve change orders in the amount of [redacted]
WHEREAS, Supplemental Lease Agreement (SLA) 5 was issued to state the actual effective date of lease GS-05B-16260, **November 22, 2002**, and to add notification language to the lease;
WHEREAS, Supplemental Lease Agreement (SLA) 6 was issued to remove the "Base Year" language for tax purposes;

WHEREAS, *the Government has ceased the use Supplemental Lease Agreements (SLA - GSA Form 276) and will use the Lease Amendment (LA) to amend Lease GS-05B-16260 hereinafter;*

WHEREAS, the parties hereto desire to amend the above Lease to extend the lease term of the lease for a period of 4 months (actual 129 days);

NOW THEREFORE, these parties for the good and valuable considerations, the receipt and sufficiency of which is hereby acknowledged, covenant and agree that the said Lease is amended, effective **11/22/2017**, as follows:

1. Therefore Paragraph 2 of GSA Form SF-2, U.S. Government Lease for Real Property number GS-05B-16260, is amended as follows:

   "**2. TO HAVE AND TO HOLD** the said premises with their appurtenances for the term beginning on **November 22, 2002 and continuing through March 31, 2018.** Should the current Lessor enter into a new lease agreement with the Government this lease may be terminated without notice to effect the execution of a new lease. No rental shall accrue after the effective date of the termination. Said notice shall be computed commencing with the day after the date of mailing."

All other terms and conditions of the lease shall remain in force and effect.

IN WITNESS WHEREOF, the parties subscribed their names as of the below date.

FOR THE LESS (b) (6) [redacted]

Signature:
Name: Harvey M. Stephens
Title: Treasurer
Entity Name: **ST. ANDREW'S BUILDING CORPORATION**
Date: November 16, 2017

FOR TH (b) (6) [redacted]

Signatu
Name: Robert E. Jones, Jr.
Title: Lease Contracting Officer
GSA, Public Buildings Service,
Date: 11/16/17

WITNESSED FOR THE LESSOR BY: (b) (6) [redacted]

Signature:
Name: R. Kim Wiles
Title: Attorney
Date: November 16, 2017