Weston Solutions, Inc.
Suite 201
1090 King Georges Post Road
Edison, New Jersey 08837-3703
732-585-4400 • Fax: 732-225-7037
www.westonsolutions.com

The Trusted Integrator for Sustainable Solutions

REMOVAL SUPPORT TEAM 3
EPA CONTRACT EP-S2-14-01

June 27, 2017

Mr. Joel Petty, On-Scene Coordinator
U.S. Environmental Protection Agency, Region II
Response and Prevention Branch
2890 Woodbridge Avenue
Edison, NJ 08837

EPA CONTRACT NO: EP-S2-14-01
TDD NO: TO-0007-0198
DOCUMENT CONTROL NO: RST3-03-F-0148
SUBJECT: FINAL SITE-SPECIFIC UFP QUALITY ASSURANCE PROJECT PLAN– DEFERIET PAPER MILL SITE, DEFERIET, JEFFERSON COUNTY, NEW YORK

Dear Mr. Petty,

Enclosed please find the Final Site-Specific Uniform Federal Policy (UFP) Quality Assurance Project Plan (QAPP) for the container inventory, HazCat field screening and container sampling activities to be conducted as part of Phase II of the Removal Assessment at the Deferiet Paper Mill Site located in Deferiet, Jefferson County, New York beginning on June 19, 2017. If you have any questions or comments, please do not hesitate to contact me at (908) 565-2987.

Sincerely,

WESTON SOLUTIONS, INC.

Michael Beuthe, CHMM
RST 3 Site Project Manager

Enclosure
cc: TDD File No.: TO-0007-0198

FINAL SITE-SPECIFIC UFP QUALITY ASSURANCE PROJECT PLAN
DEFERIET PAPER MILL SITE

Deferiet, Jefferson County, New York 13628

Prepared By:

Removal Support Team 3
Weston Solutions, Inc.
East Division
Edison, New Jersey 08837

DC No.: RST3-03-F-0148
TDD No.: TO-0007-0198
EPA Contract No.: EP-S2-14-01

June 2017

TABLE OF CONTENTS

CROSSWALK....1
QAPP Worksheet #1: Title and Approval Page....4
QAPP Worksheet #2: QAPP Identifying Information....5
QAPP Worksheet #3: Distribution List....6
QAPP Worksheet #4: Project Personnel Sign-Off Sheet....7
QAPP Worksheet #5: Project Organizational Chart....8
QAPP Worksheet #6: Communication Pathways....9
QAPP Worksheet #7: Personnel Responsibilities and Qualifications Table....9
QAPP Worksheet #8: Special Personnel Training Requirements Table....10
QAPP Worksheet #9: Project Scoping Session Participants Sheet....11
QAPP Worksheet #10: Problem Definition....12
QAPP Worksheet #11: Project Quality Objectives/Systematic Planning Process Statement.14
QAPP Worksheet #13: Secondary Data Criteria and Limitations Table....16
QAPP Worksheet #14: Summary of Project Tasks....17
QAPP Worksheet #15: Reference Limits and Evaluation Table....21
QAPP Worksheet #16: Project Schedule/Timeline Table....31
QAPP Worksheet #17: Sampling Design and Rationale....32
QAPP Worksheet #18: Sampling Locations and Methods/SOP Requirements Table....34
QAPP Worksheet #19: Analytical SOP Requirements Table....35
QAPP Worksheet #20: Field Quality Control Sample Summary Table....37
QAPP Worksheet #21: Project Sampling SOP References Table....38
QAPP Worksheet #22: Field Equipment Calibration, Maintenance, Testing, and Inspection Table....39
QAPP Worksheet #23: Analytical SOP References Table....40
QAPP Worksheet #24: Analytical Instrument Calibration Table....41
QAPP Worksheet #25: Analytical Instrument and Equipment Maintenance, Testing, and Inspection Table....43
QAPP Worksheet #26: Sample Handling System....44
QAPP Worksheet #27: Sample Custody Requirements....45
QAPP Worksheet #27: Sample Custody Requirements (Concluded)....46
QAPP Worksheet #28: QC Samples Table....47
QAPP Worksheet #29: Project Documents and Records Table....57
QAPP Worksheet #30: Analytical Services Table....58
QAPP Worksheet #31: Planned Project Assessments Table....59
QAPP Worksheet #32: Assessment Findings and Corrective Action Responses....60
QAPP Worksheet #33: QA Management Reports Table....61
QAPP Worksheet #34: Verification (Step I) Process Table....62
QAPP Worksheet #35: Validation (Steps IIa and IIb) Process Table....63
QAPP Worksheet #36: Validation (Steps IIa and IIb) Summary Table....64
QAPP Worksheet #37: Usability Assessment....65

LIST OF ATTACHMENTS

ATTACHMENT A: Figure 1 - Site Location Map

ATTACHMENT B: Sampling SOPs
EPA ERT SOP # 2001: General Field Sampling Guidelines
EPA ERT SOP # 2009: Drum Sampling
EPA ERT SOP # 2010: Tank Sampling

ATTACHMENT C: Project Action Limits

ATTACHMENT D: Achievable Laboratory Limits

LIST OF ACRONYMS

ADR	Automated Data Review
ANSETS	Analytical Services Tracking System
AOC	Acknowledgment of Completion
ASTM	American Society for Testing and Materials
CEO	Chief Executive Officer
CERCLA	Comprehensive Environmental Response, Compensation and Liability Act
CLP	Contract Laboratory Program
CFM	Contract Financial Manager
CO	Contract Officer
COI	Conflict of Interest
COO	Chief Operations Officer
CRDL	Contract Required Detection Limit
CRTL	Core Response Team Leader
CRQL	Contract Required Quantitation Limit
CQLOSS	Corporate Quality Leadership and Operations Support Services
CWA	Clean Water Act
DCN	Document Control Number
DESA	Division of Environmental Science and Assessment
DI	Deionized Water
DPO	Deputy Project Officer
DQI	Data Quality Indicator
DQO	Data Quality Objective
EM	Equipment Manager
EDD	Electronic Data deliverable
ENVL	Environmental Unit Leader
EPA	Environmental Protection Agency
ERT	Environmental Response Team
FASTAC	Field and Analytical Services Teaming Advisory Committee
GC/ECD	Gas Chromatography/Electron Capture Detector
GC/MS	Gas Chromatography/Mass Spectrometry
HASP	Health and Safety Plan
HRS	Hazard Ranking System
HSO	Health and Safety Officer
ITM	Information Technology Manager
LEL	Lower Explosive Limit
MSA	Mine Safety Appliances
MS/MSD	Matrix Spike/Matrix Spike Duplicate
NELAC	National Environmental Laboratory Accreditation Conference
NELAP	National Environmental Laboratory Accreditation Program
NIOSH	National Institute for Occupational Safety and Health
NIST	National Institute of Standards and Technology
OSC	On-Scene Coordinator
OSHA	Occupational Safety and Health Administration

LIST OF ACRONYMS (Concluded)

OSWER	Office of Solid Waste and Emergency Response
PARCCS	Precision, Accuracy, Representativeness, Completeness, Comparability, Sensitivity
PAH	Polynuclear Aromatic Hydrocarbons
PCB	Polychlorinated Biphenyls
PIO	Public Information Officer
PM	Program Manager
PO	Project Officer
PRP	Potentially Responsible Party
PT	Proficiency Testing
QA	Quality Assurance
QAL	Quality Assurance Leader
QAPP	Quality Assurance Project Plan
QMP	Quality Management Plan
QA/QC	Quality Assurance/Quality Control
QC	Quality Control
RC	Readiness Coordinator
RCRA	Resource Conservation and Recovery Act
RPD	Relative Percent Difference
RSCC	Regional Sample Control Coordinator
RST	Removal Support Team
SARA	Superfund Amendments and Reauthorization Act
SEDD	Staged Electronic Data Deliverable
SOP	Standard Operating Practice
SOW	Statement of Work
SPM	Site Project Manager
START	Superfund Technical Assessment and Response Team
STR	Sampling Trip Report
TAL	Target Analyte List
TCL	Total Compound List
TDD	Technical Direction Document
TDL	Technical Direction Letter
TO	Task Order
TQM	Total Quality Management
TSCA	Toxic Substances Control Act
UFP	Uniform Federal Policy
VOA	Volatile Organic Analysis

CROSSWALK

The following table provides a "cross-walk" between the QAPP elements outlined in the Uniform Federal Policy for Quality Assurance Project Plans (UFP-QAPP Manual), the necessary information, and the location of the information within the text document and corresponding QAPP Worksheet. Any QAPP elements and required information that are not applicable to the project are circled.

QAPP Element(s) and Corresponding Section(s) of UFP-QAPP Manual	Required Information	Crosswalk to QAPP Section	Crosswalk to QAPP Worksheet No.
Project Management and Objectives			
2.1 Title and Approval Page	- Title and Approval Page	Approval Page	1
2.2 Document Format and Table of Contents 2.2.1 Document Control Format 2.2.2 Document Control Numbering System 2.2.3 Table of Contents 2.2.4 QAPP Identifying Information	- Table of Contents - QAPP Identifying Information	TOC Approval Page	2
2.3 Distribution List and Project Personnel Sign-Off Sheet 2.3.1 Distribution List 2.3.2 Project Personnel Sign-Off Sheet	- Distribution List - Project Personnel Sign-Off Sheet	Approval Page	3 4
2.4 Project Organization 2.4.1 Project Organizational Chart 2.4.2 Communication Pathways 2.4.3 Personnel Responsibilities and Qualifications 2.4.4 Special Training Requirements and Certification	- Project Organizational Chart - Communication Pathways - Personnel Responsibilities and Qualifications - Special Personnel Training Requirements	2	5 6 7 8
2.5 Project Planning/Problem Definition 2.5.1 Project Planning (Scoping) 2.5.2 Problem Definition, Site History, and Background	- Project Planning Session Documentation (including Data Needs tables) - Project Scoping Session Participants Sheet - Problem Definition, Site History, and Background - Site Maps (historical and present)	1	9 10
2.6 Project Quality Objectives and Measurement Performance Criteria 2.6.1 Development of Project Quality Objectives Using the Systematic Planning Process 2.6.2 Measurement Performance Criteria	- Site-Specific PQOs - Measurement Performance Criteria	3	11 12
2.7 Secondary Data Evaluation	- Sources of Secondary Data and Information - Secondary Data Criteria and Limitations	1 2	13

QAPP Element(s) and Corresponding Section(s) of UFP-QAPP Manual	Required Information	Crosswalk to QAPP Section	Crosswalk to QAPP Worksheet No.
2.8 Project Overview and Schedule 2.8.1 Project Overview 2.8.2 Project Schedule	- Summary of Project Tasks - Reference Limits and Evaluation - Project Schedule/Timeline	4	14 15 16
Measurement/Data Acquisition			
3.1 Sampling Tasks 3.1.1 Sampling Process Design and Rationale 3.1.2 Sampling Procedures and Requirements 3.1.2.1 Sampling Collection Procedures 3.1.2.2 Sample Containers, Volume, and Preservation 3.1.2.3 Equipment/Sample Containers Cleaning and Decontamination Procedures 3.1.2.4 Field Equipment Calibration, Maintenance, Testing, and Inspection Procedures 3.1.2.5 Supply Inspection and Acceptance Procedures 3.1.2.6 Field Documentation Procedures	- Sampling Design and Rationale - Sample Location Map - Sampling Locations and Methods/SOP Requirements - Analytical Methods/SOP Requirements - Field Quality Control Sample Summary - Sampling SOPs - Project Sampling SOP References - Field Equipment Calibration, Maintenance, Testing, and Inspection	5	17 18 19 20 21 22
3.2 Analytical Tasks 3.2.1 Analytical SOPs 3.2.2 Analytical Instrument Calibration Procedures 3.2.3 Analytical Instrument and Equipment Maintenance, Testing, and Inspection Procedures 3.2.4 Analytical Supply Inspection and Acceptance Procedures	- Analytical SOPs - Analytical SOP References - Analytical Instrument Calibration - Analytical Instrument and Equipment Maintenance, Testing, and Inspection	6	23 24 25
3.3 Sample Collection Documentation, Handling, Tracking, and Custody Procedures 3.3.1 Sample Collection Documentation 3.3.2 Sample Handling and Tracking System 3.3.3 Sample Custody	- Sample Collection Documentation Handling, Tracking, and Custody SOPs - Sample Container Identification - Sample Handling Flow Diagram - Example Chain-of-Custody Form and Seal	7	26 27

QAPP Element(s) and Corresponding Section(s) of UFP-QAPP Manual	Required Information	Crosswalk to QAPP Section	Crosswalk to QAPP Worksheet No.
3.4 Quality Control Samples 3.4.1 Sampling Quality Control Samples 3.4.2 Analytical Quality Control Samples	- QC Samples - Screening/Confirmatory Analysis Decision Tree	5	28
3.5 Data Management Tasks 3.5.1 Project Documentation and Records 3.5.2 Data Package Deliverables 3.5.3 Data Reporting Formats 3.5.4 Data Handling and Management 3.5.5 Data Tracking and Control	- Project Documents and Records - Analytical Services - Data Management SOPs	6	29 30
Assessment/Oversight			
4.1 Assessments and Response Actions 4.1.1 Planned Assessments 4.1.2 Assessment Findings and Corrective Action Responses	- Assessments and Response Actions - Planned Project Assessments - Audit Checklists - Assessment Findings and Corrective Action Responses	8	31 32
4.2 QA Management Reports	- QA Management Reports		33
4.3 Final Project Report	- Final Report(s)		
Data Review			
5.1 Overview			
5.2 Data Review Steps 5.2.1 Step I: Verification 5.2.2 Step II: Validation 5.2.2.1 Step IIa Validation Activities 5.2.2.2 Step IIb Validation Activities 5.2.3 Step III: Usability Assessment 5.2.3.1 Data Limitations and Actions from Usability Assessment 5.2.3.2 Activities	- Verification (Step I) Process - Validation (Steps IIa and IIb) Process - Validation (Steps IIa and IIb) Summary - Usability Assessment	9	34 35 36 37

QAPP Worksheet #1: Title and Approval Page

Title: Final Site-Specific UFP Quality Assurance Project Plan
Site Name/Project Name: Deferiet Paper Mill Site
Site Location: 400 Anderson Ave, Deferiet, Jefferson County, New York 13628
Revision Number: 00
Revision Date: Not Applicable

Weston Solutions, Inc.
Lead Organization

Michael Beuthe
Weston Solutions, Inc.
1090 King Georges Post Road, Suite 201
Edison, NJ 08837
Email: Michael.Beuthe@westonsolutions.com
Preparer's Name and Organizational Affiliation

14 June 2017
Preparation Date (Day/Month/Year)

Site Project Manager:

Signature

Michael Beuthe/Weston Solutions, Inc.
Printed Name/Organization/Date

QA Officer/Technical Reviewer:

Signature

Smita Sumbaly/Weston Solution, Inc.
Printed Name/Organization/Date

EPA, Region II On-Scene Coordinator (OSC):

Signature

Joel Petty/EPA, Region II
Printed Name/Organization/Date

EPA, Region II Quality Assurance Officer QAO):

Signature

Printed Name/Organization/Date

Document Control Number: RST3-03-F-0148

QAPP Worksheet #2: QAPP Identifying Information

Site Name/Project Name: Deferiet Paper Mill Site
Site Location: 400 Anderson Ave, Deferiet, Jefferson County, New York, 13628
Operable Unit: 00
Title: Site-Specific UFP Quality Assurance Project Plan
Revision Number: 00
Revision Date: Not Applicable

1. **Identify guidance used to prepare QAPP:**
   Uniform Federal Policy for Quality Assurance Project Plans, SW-846, and EPA Methods.

2. **Identify regulatory program:** EPA, Region II

3. **Identify approval entity:** EPA, Region II

4. **Indicate whether the QAPP is a generic or a <u>site-specific</u> QAPP.**

5. **List dates of scoping sessions that were held:** June 13, 2017

6. **List dates and titles of QAPP documents written for previous site work, if applicable:**

   Site-Specific UFP QAPP, dated June 5, 2017 (DCN # RST3-03-D-0274)

7. **List organizational partners (stakeholders) and connection with lead organization:**

   None

8. **List data users:** EPA, Region II (see Worksheet #4 for individuals)

9. **If any required QAPP elements and required information are not applicable to the project, then provide an explanation for their exclusion below:**

Worksheet #12 is not required for liquid, sludge or solid waste samples because samples will be collected for screening data QA objectives.

10. **Document Control Number:** RST3-03-F-0148

QAPP Worksheet #3: Distribution List

[List those entities to which copies of the approved site-specific QAPP, subsequent QAPP revisions, addenda, and amendments are sent]

QAPP Recipient	Title	Organization	Telephone Number	Fax Number	E-mail Address	Document Control Number
Joel Petty	OSC	EPA, Region II	(732) 321-4388	(732) 906-6182	Petty.joel@epa.gov	RST3-03-F-0148
Timothy Benton	HSO	Weston Solutions, Inc., RST 3	(908) 565-2973	(732) 225-7037	tim.benton@westonsolutions.com	RST3-03-F-0148
Smita Sumbaly	QAO	Weston Solutions, Inc., RST 3	(732) 585-4410	(732) 225-7037	s.sumbaly@westonsolutions.com	RST3-03-F-0148
Michael Beuthe	SPM	Weston Solutions, Inc., RST 3	(908) 565-2987	(732) 225-7037	Michael.Beuthe@westonsolutions.com	RST3-03-F-0148
Site TDD File	RST 3 Site TDD File	Weston Solutions, Inc., RST 3	Not Applicable	Not Applicable	Not Applicable	RST3-03-F-0148

QAPP Worksheet #4: Project Personnel Sign-Off Sheet

[Copies of this form signed by key project personnel from each organization to indicate that they have read the applicable sections of the site-specific QAPP and will perform the tasks as described; add additional sheets as required. Ask each organization to forward signed sheets to the central project file.]

Organization: Weston Solutions, Inc., RST 3

Project Personnel	Title	Telephone Number	Signature	Date QAPP Read
Joel Petty	EPA, Region II, OSC	(732) 321-4388		
Timothy Benton	HSO, RST 3	(908) 565-2973		6/27/17
Smita Sumbaly	QAO, RST 3	(732) 585-4410		6/27/17
Michael Beuthe	SPM and HSO, RST 3	(908) 565-2987		6/27/17
Michael Garibaldi	Field Team Member, RST 3	(908) 565-2971		6/27/17
Joel Siegel	Field Team Member, RST 3	(732) 570-4997		
Kathryn Donohue	Field Team Member, RST 3	(732)-570-4943		6/27/17

QAPP Worksheet #5: Project Organizational Chart

Identify reporting relationship between all organizations involved in the project, including the lead organization and all contractor and subcontractor organizations. Identify the organizations providing field sampling, on-site and off-site analysis, and data review services, including the names and telephone numbers of all project managers, project team members, and/or project contacts for each organization.

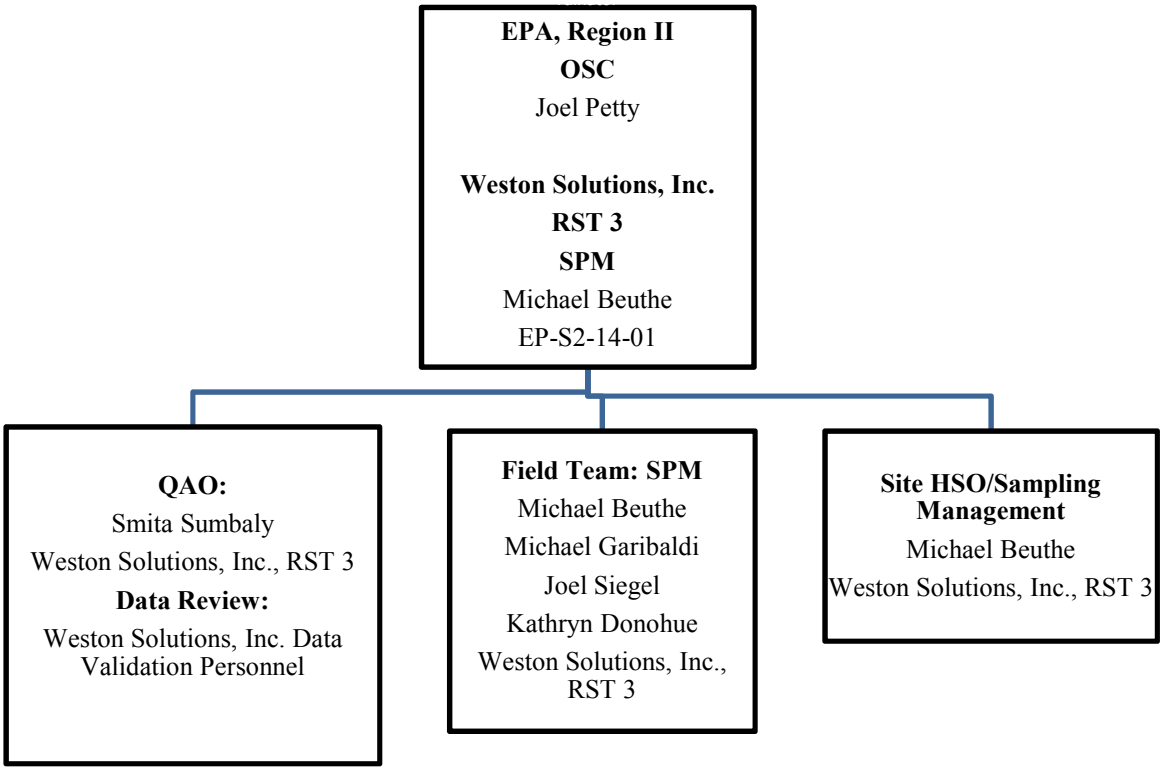

Acronyms:

EPA – U.S. Environmental Protection Agency
HSO – Health & Safety Officer
OSC – On-Scene Coordinator
TBD – To Be Determined
QAO – Quality Assurance Officer
RST 3 – Removal Support Team 3
SPM – Site Project Manager

QAPP Worksheet #6: Communication Pathways

Communication Drivers	Responsible Entity	Name	Phone Number	Procedure
Point of contact with EPA OSC	SPM, Weston Solutions, Inc., RST 3	Michael Beuthe, SPM	(908)-565-2987	All technical, QA and decision-making matters in regard to the project (verbal, written or electronic)
Adjustments to QAPP	SPM, Weston Solutions, Inc., RST 3	Michael Beuthe, SPM	(908)-565-2987	QAPP approval dialogue
Health and Safety On-Site Meeting	HSO, Weston Solutions, Inc., RST 3	Michael Beuthe, SPM	(908)-565-2987	Explain/review site hazards, personnel protective equipment, hospital location, etc.

EPA – U.S. Environmental Protection Agency
HSO – Health and Safety Officer
OSC – On-Scene Coordinator
QA – Quality Assurance
QAPP – Quality Assurance Project Plan
RST 3 – Removal Support Team 3
SPM – Site Project Manager

QAPP Worksheet #7: Personnel Responsibilities and Qualifications Table

Name	Title	Organizational Affiliation	Responsibilities	Education and Experience Qualifications
Joel Petty	EPA OSC	EPA, Region II	All project coordination, direction and decision making.	Not Applicable
Michael Beuthe	SPM & HSO, RST 3	Weston Solutions, Inc.	Sample event management, H&S and sample collection/management	6 years
Michael Garibaldi	Field Personnel, RST 3	Weston Solutions, Inc.	Sample collection and sample management	20 years
Joel Siegel	Field Personnel, RST 3	Weston Solutions, Inc.	Sample collection and sample management	15 years
Kathryn Donohue	Field Personnel, RST 3	Weston Solutions, Inc.	Sample collection and sample management	1 year

TBD – To Be Determined
*All RST 3 members, including subcontractor's resumes, are in possession of the RST 3 Program Manager, EPA Project Officer, and Contracting Officer.

QAPP Worksheet #8: Special Personnel Training Requirements Table

Project Function	Specialized Training By Title or Description of Course	Training Provider	Training Date	Personnel / Groups Receiving Training	Personnel Titles / Organizational Affiliation	Location of Training Records / Certificates[1]
[Specify location of training records and certificates for samplers]						
QAPP Training	This training is presented to all RST 3 personnel to introduce the provisions, requirements, and responsibilities detailed in the UFP QAPP. The training presents the relationship between the site-specific QAPPs, SOPs, work plans, and the Generic QAPP. QAPP refresher training will be presented to all employees following a major QAPP revision.	Weston Solutions, Inc., QAO	As needed	All RST 3 field personnel upon initial employment and as refresher training	Weston Solutions, Inc.	Weston Solutions, Inc., EHS Database
Health and Safety Training	Health and safety training will be provided to ensure compliance with Occupational Safety and Health Administration (OSHA) as established in 29 CFR 1910.120.	Weston Solutions, Inc., HSO	Yearly at a minimum	All Employees upon initial employment and as refresher training every year	Weston Solutions, Inc.	Weston Solutions, Inc., EHS Database
Others	Scribe, ICS 100 and 200, and Air Monitoring Equipment Trainings provided to all employees	Weston Solutions, Inc., QAO/Group Leader's	Upon initial employment and as needed			
	Dangerous Goods Shipping	Weston Solutions, Inc., HSO	Every 2 years			

All team members are trained in the concepts and procedures in recognizing opportunities for continual improvement, and the approaches required to improve procedures while maintaining conformance with legal, technical, and contractual obligations.

[1] All RST 3 members, including subcontractor's, certifications are in possession of the RST 3 HSO.

QAPP Worksheet #9: Project Scoping Session Participants Sheet

Site Name/Project Name: Deferiet Paper Mill Site
Site Location: 400 Anderson Ave, Deferiet, Jefferson County, New York, 13628
Operable Unit: 00
Date of Sessions: June 14, 2017
Scoping Session Purpose: To discuss questions, comments, and assumptions regarding technical issues involved with the Removal Assessment sampling activities for the Site.

Name	Title	Affiliation	Phone #	E-mail Address	*Project Role
Joel Petty	EPA OSC	EPA, Region II	(732) 321-4388	petty.joel@epa.gov	OSC
Timothy Benton	Operations Lead	Weston Solutions, Inc., RST 3	(908) 565-2973	tim.benton@westonsolutions.com	QA
Michael Beuthe	Site Project Manager	Weston Solutions, Inc., RST 3	(908) 565-2987	Michael.Beuthe@westonsolutions.com	SPM & HSO

Comments/Decisions: As part of Phase II of the Removal Assessment at the Deferiet Paper Mill Site (the Site), Weston Solutions, Removal Support Team 3 (RST 3) is tasked with conducting an inventory of the containers identified during Phase I of the Removal Assessment, and performing Hazard Categorization (HazCat) field screening of the contents in each container. Based on HazCat results, up to 20 solid, sludge, and liquid waste samples will be collected from containers selected by the U.S. Environmental Protection Agency (EPA) On- Scene Coordinator (OSC), and will be analyzed for Resource Conservation and Recovery Act (RCRA) Characteristics, target compound list (TCL) volatile organic compounds (VOCs), semivolatile organic compounds (SVOCs), polychlorinated biphenyls (PCBs), pesticides, target analyte list (TAL) metals, including mercury (Hg), and full Toxicity Characteristic Leaching Procedure (TCLP). Quality Assurance/Quality Control (QA/QC) samples will not be collected by RST 3 for any matrices during the sampling event. RST 3 will perform all sampling in Level B or Level C personal protective equipment (PPE). It is anticipated that the Removal Assessment activities will be completed in three days.

Action Items: The Contract Laboratory (CLP) Request Form, and the RST 3 Analytical Services Request Form were submitted on June 13, 2017.

Consensus Decisions: The Removal Assessment activities will begin on June 19, 2017, and are anticipated to be completed in three days.

QAPP Worksheet #10: Problem Definition

PROBLEM DEFINITION

On June 6 and 7, 2017, RST 3 conducted the first phase of the Removal Assessment at the Site which consisted of an initial inspection of the property to identify suspected asbestos containing materials (SACM), along with any additional areas of concern (AOC), and the collection of 30 bulk SACM samples for asbestos analysis. During Phase 1 of the Removal Assessment, abandoned containers, including 55 drums, 15 totes and 10 smaller containers (5 gallons or less in size), were discovered in throughout the former Fire Department and Company Garage buildings. In addition, two 4,500 gallon above ground storage tanks (ASTs) labeled as sodium hydroxide and sulfuric acid, respectively, were discovered on the first floor of the former Boiler Room.

SITE HISTORY/CONDITIONS

The Site is the location of the former Deferiet Paper Mill that began operations in 1899. As of today the facility is no longer operational however, there is an operating hydroelectric power plant owned by Brookfield Renewable Power, LLC (Brookfield) that is physically attached to the boiler room and sulfite room of the Site. The hydroelectric power-plant is located towards the rear of the site.

The original paper mill erected a hydroelectric power plant to run the boilers. Steam was used to run turbines which operated milling machines as well as providing heat to the driers. In the mid-1990s, the hydroelectric power-plant along with two easements was sold to the regional utility company. Through a series of transfers, the hydroelectric power-plant is currently owned by Brookfield.

In 2006, the property was auctioned off as a result of then owners filing bankruptcy. Deferiet Development, LLC (Deferiet) purchased the Site for the purpose of recovering steel, brass and other metals. In the process of recovering metal, Deferiet also dismantled overhead steam pipes between the machine rooms and boiler room. These two buildings flank the easement. Brookfield employees were concerned because of potential exposure to friable asbestos whenever they accessed the easement. Brookfield raised their employees concerns to Jefferson County officials. An attorney representing Jefferson County on environmental matters referred the Site to the U.S. EPA. In December 2015, Jefferson County requested the assistance of EPA to evaluate an easement associated with the former Deferiet Paper Mill for SACM. The easement was used by personnel to access the Brookfield Renewable Power Facility. In March 2016, EPA initiated an Emergency Response (ER) to address immediate asbestos concerns originating from the Site. Following the completion of the ER, a Removal Assessment was recommended to evaluate the existing structures and the presence of SACM.

QAPP Worksheet #10: Problem Definition (Concluded)

PROJECT DESCRIPTION

As part of Phase II the Removal Assessment at the Site, RST 3 is tasked with conducting an inventory of the containers identified during Phase I of the Removal Assessment, and performing HazCat field screening of the contents in each container. Based on HazCat results, up to 20 solid, sludge, and liquid waste samples will be collected from containers selected by the EPA OSC, and will be analyzed for RCRA Characteristics, TCL VOCs, SVOCs, PCBs, pesticides, TAL metals, including Hg, and TCLP. QA/QC samples will not be collected by RST 3 for any matrices during the sampling event. RST 3 will perform all sampling in Level B or Level C personal PPE. It is anticipated that the Removal Assessment activities will be completed in three days.

PROJECT DECISION STATEMENTS

Containers will be selected for sampling by the EPA OSC based on HazCat field screening results and Site observations. The analytical data generated from the Removal Assessment will be used by the EPA to determine if a Removal Action is warranted at the Site.

QAPP Worksheet #11: Project Quality Objectives/Systematic Planning Process Statement

Overall project objectives include: RST 3 is tasked with conducting an inventory of the containers identified during Phase I of the Removal Assessment, and performing HazCat field screening of the contents in each container. Based on HazCat results, up to 20 solid, sludge, and liquid waste samples will be collected from containers selected by the EPA OSC, and will be analyzed for RCRA Characteristics, TCL VOCs, SVOCs, PCBs, pesticides, TAL metals, including Hg, and TCLP. QA/QC samples will not be collected by RST 3 for any matrices during the sampling event. RST 3 will perform all sampling in Level B or Level C personal PPE. It is anticipated that the Removal Assessment activities will be completed in three days.

Who will use the data? Data will be used by the EPA OSC.

What will the data be used for? The data will be used to determine if conditions at the Site warrant a Removal Action.

What types of data are needed?

Matrix:	Liquid, sludge and solid waste
Type of Data:	Screening Data
Analytical Techniques:	Off-site laboratory analyses
Parameters:	RCRA Characteristics, TCL VOCs, SVOCs, PCBs, pesticides, TAL metals including Hg, and full TCLP
Type of Sampling Equip.:	Coliwasas, drum thieves, bailers, plastic scoops and sample jars
Access Agreement:	Obtained by EPA OSC.
Sampling locations:	Sample locations will be identified by the EPA OSC.

How much data are needed? Up to 20 liquid, sludge and solid waste samples.

How "good" does the data need to be in order to support the environmental decision?
Sampling/analytical measurement performance criteria for Precision, Accuracy, Representativeness, Completeness, and Comparability (PARCC) parameters will be established. Samples will be collected for screening data. Matrix spike/ matrix spike duplicate (MS/MSD) and field duplicate samples will not be collected.

Where, when, and how should the data be collected/generated?
Sample locations will be selected by the EPA OSC to determine overall conditions at the Site. All samples will be collected utilizing methods outlined in the EPA Environmental Response Team (ERT) Standard Operating Procedures (SOPs). The Removal Assessment is scheduled to begin on June 19, 2017 and will last approximately three days.

Who will collect and generate the data? The samples will be collected by RST 3 and analyzed by non-CLP Laboratories and validated by RST 3 data validation personnel.

QAPP Worksheet #11: Project Quality Objectives/Systematic Planning Process Statement (Concluded)

How will the data be reported? All data will be reported by the assigned laboratories (Preliminary, Electronics, and Hard Copy format). The Site Project Manager will provide a Sampling Trip Report, Status Reports, Maps/Figures, Analytical Report, and Data Validation Report to the EPA OSC

How will the data be archived? Electronic data deliverables will be archived in the Scribe database. Non-CLP hard copy data will be archived in EPA's document control room.

QAPP Worksheet #13: Secondary Data Criteria and Limitations Table

Any data needed for project implementation or decision making that are obtained from non-direct measurement sources such as computer databases, background information, technologies and methods, environmental indicator data, publications, photographs, topographical maps, literature files and historical data bases will be compared to the DQOs for the project to determine the acceptability of the data. Thus, for example, analytical data from historical surveys will be evaluated to determine whether they satisfy the validation criteria for the project and to determine whether sufficient data was provided to allow an appropriate validation to be done. If not, then a decision to conduct additional sampling for the site may be necessary.

Secondary Data	Data Source (Originating Organization, Report Title, and Date)	Data Generator(s) (Originating Org., Data Types, Data Generation/ Collection Dates)	How Data May Be Used (if deemed usable during data assessment stage)	Limitations on Data Use
Photo Documentation for initial Site Inspection	RST 3 Photographs from Initial Site Inspection, June 6, 2017	June 6, 2017	Photographs document the containers that will be sampled during Phase II of the Removal Assessment	None

QAPP Worksheet #14: Summary of Project Tasks

Sampling Tasks:

RST 3 is tasked with conducting a container inventory for the containers identified during Phase I of the Removal Assessment, and performing HazCat field screening of the contents in each container. Based on HazCat results, up to 20 solid, sludge, and liquid waste samples will be collected from containers selected by the EPA OSC, and will be analyzed for RCRA Characteristics, TCL VOCs, SVOCs, PCBs, pesticides, TAL metals, including Hg, and TCLP. QA/QC samples will not be collected by RST 3 for any matrices during the sampling event.

Analysis Tasks:

RCRA Characteristics – Liquid, Sludge, and Solid Waste - SW-846 7.3.3, SW-846 7.3.4, EPA Method 1010/1030 and EPA Method 9040/9045D
TCL VOCs — Liquid, Sludge, and Solid Waste- SW-846 Method 8260B/8260C
TCL SVOCs – Liquid, Sludge, and Solid Waste – SW-846 Method 8270D
TCL Pesticides - Liquid, Sludge, and Solid Waste - SW-846 Method 8081B
TCL PCBs – Liquid, Sludge, and Solid Waste – SW-846 Method 8082A
TAL Metals (including Hg) – Liquid, Sludge, and Solid Waste – SW-846 Methods 6010C, 7470A, and 7471A
TCLP VOCs – Solid and Sludge Waste - SW-846 Method 8260C
TCLP SVOCs – Solid and Sludge Waste -SW-846 Method 8270D
TCLP Pesticides – Solid and Sludge Waste -SW-846 Method 8081B
TCLP Herbicides - Solid and Sludge Waste - SW846 Method 8151A
TCLP Metals (including Hg) - Solid and Sludge Waste – SW846 Method 6010C/7470A/7471A

Quality Control Tasks:

Samples will be collected for screening data. Therefore, MS/MSD and field duplicates will not be collected

Data Management Tasks:

Activities under this project will be reported in status and trip reports and other deliverables (*e.g.,* analytical reports, final reports) described herein. Activities will also be summarized in appropriate format for inclusion in monthly and annual reports.

The following deliverables will be provided under this project:

Trip Report: A Sampling Trip Report that combines both phases of the Removal Assessment will be submitted to the EPA OSC within two weeks of receiving analytical data.

Maps/Figures: Maps depicting site layout and sample locations will be included in the trip report, as appropriate.

QAPP Worksheet #14: Summary of Project Tasks (Continued)

Documentation and Records:

All sample documents will be completed legibly, in ink. Any corrections or revisions will be made by lining through the incorrect entry and by initialing the error.

Field Logbook: The field logbook is essentially a descriptive notebook detailing site activities and observations so that an accurate account of field procedures can be reconstructed in the writer's absence. Field logbook will be bound and paginated. All entries will be dated and signed by the individuals making the entries, and should include (at a minimum) the following:

1. Site name and project number
2. Name(s) of personnel on-site
3. Dates and times of all entries (military time preferred)
4. Descriptions of all site activities, site entry and exit times
5. Noteworthy events and discussions
6. Weather conditions
7. Site observations
8. Sample and sample location identification and description*
9. Subcontractor information and names of on-site personnel
10. Date and time of sample collections, along with COC information
11. Record of photographs
12. Site sketches
13. GPS Coordinates for each sample location

* The description of the sample location will be noted in such a manner as to allow the reader to reproduce the location in the field at a later date.

Sample Labels: Sample labels will clearly identify the particular sample, and should include the following:

1. Site/project number.
2. Sample identification number.
3. Sample collection date and time.
4. Designation of sample (grab or composite).
5. Sample preservation.
6. Analytical parameters.
7. Name of sampler.

Sample labels will be written in indelible ink and securely affixed to the sample container. Tie-on labels can be used if properly secured.

QAPP Worksheet #14: Summary of Project Tasks (Concluded)

Custody Seals: Custody seals demonstrate that a sample container has not been tampered with or opened. The individual in possession of the sample(s) will sign and date the seal, affixing it in such a manner that the container cannot be opened without breaking the seal. The name of this individual, along with a description of the sample packaging, will be noted in the field logbook.

Assessment/Audit Tasks: No performance audit of field operations is anticipated at this time. If conducted, performance and system audit will be in accordance with the project plan.

Data Review Tasks: All data will be validated an RST 3 Data Validator.

Laboratory analytical results will be assessed by the data reviewer for compliance with required precision, accuracy, completeness, representativeness, and sensitivity.

QAPP Worksheet #15: Reference Limits and Evaluation Table
QAPP Worksheet #15A: RCRA Characteristics

Matrix: Liquid, Sludge, and Solid Waste
Analytical Group: RCRA Characteristics
Concentration Level: Low

Analyte[1]	CAS Number	Project Action Limits* RCRA Hazardous Waste Characteristic Regulations	Project Quantitation Limit (µg/kg)	Methods: Releasable Sulfide-SW 846-7.3.4, Releasable Cyanide-SW 846- 7.3.3,Ignitability-40CFR261.21 and Corrosivity, pH-EPA 9045C
Cyanide, Reactive	NA	See Attachment C	N/S	**See Attachment D
Sulfide, Reactive	NA		N/S	
pH	NA		N/S	
Flash Point	NA		N/S	

Note: Sample detection limit may be elevated due to sample concentration.
TBD – To be determined
N/S - Not Specified
**See Attachment D for the list of compounds and reporting limits provided by the laboratory.

QAPP Worksheet #15: Reference Limits and Evaluation Table
QAPP Worksheet #15B: TCL VOCs

Matrix: Liquid, Sludge, and Solid Waste
Analytical Group: TCL VOCs
Concentration Level: Medium/High

Analyte	CAS Number	Project Action Limits*	Project Quantitation Limit (mg/kg)	Analytical Method – SW-846 Method 8260B (Medium) Detection Limits and Quantitation Limits (µg/kg)**
Dichlorodifluoromethane	75-71-8	TBD	NS	See Attachment D
Chloromethane	74-87-3		NS	
Vinyl Chloride	75-01-4		NS	
Bromomethane	74-83-9		NS	
Chloroethane	75-00-3		NS	
Trichlorofluoromethane	75-69-4		NS	
1,1-Dichloroethene	75-35-4		NS	
1,1,2-Trichloro-1,2,2-trifluoroethane	76-13-1		NS	
Acetone	67-64-1		NS	
Carbon Disulfide	75-15-0		NS	
Methyl Acetate	79-20-9		NS	
Methylene Chloride	75-09-2		NS	
trans-1,2-Dichloroethene	156-60-5		NS	
Methyl tert-Butyl Ether	1634-04-4		NS	
1,1-Dichloroethane	75-34-3		NS	
cis-1,2-Dichloroethene	156-59-2		NS	
2-Butanone	78-93-3		NS	
Chloroform	67-66-3		NS	
1,1,1-Trichloroethane	71-55-6		NS	
Cyclohexane	110-82-7		NS	
Carbon Tetrachloride	56-23-5		NS	
Benzene	71-43-2		NS	
1,2-Dichloroethane	107-06-2		NS	
Trichloroethene	79-01-6		NS	
Methylcyclohexane	108-87-2		NS	
1,2-Dichloropropane	78-87-5		NS	
Bromodichloromethane	75-27-4		NS	

QAPP Worksheet #15: Reference Limits and Evaluation Table (Continued)
QAPP Worksheet #15B: TCL VOCs (Concluded)

Matrix: Liquid, Sludge, and Solid Waste
Analytical Group: TCL VOCs
Concentration Level: Medium/High

Analyte	CAS Number	Project Action Limits	Project Quantitation Limit (mg/kg)	Analytical Method – SW-846 Method 8260B (Medium) Detection Limits and Quantitation Limits (µg/kg)**
cis-1,3-Dichloropropene	10061-01-5	TBD	NS	See Attachment D
4-Methyl-2-Pentanone	108-10-1		NS	
Toluene	108-88-3		NS	
trans-1,3-Dichloropropene	10061-02-6		NS	
1,1,2-Trichloroethane	79-00-5		NS	
Tetrachloroethene	127-18-4		NS	
2-Hexanone	591-78-6		NS	
Dibromochloromethane	124-48-1		NS	
1,2-Dibromoethane	106-93-4		NS	
Chlorobenzene	108-90-7		NS	
Ethylbenzene	100-41-4		NS	
Xylenes (total)	1330-20-7		NS	
Styrene	100-42-5		NS	
Bromoform	75-25-2		NS	
Isopropylbenzene	98-82-8		NS	
1,1,2,2-Tetrachloroethane	79-34-5		NS	
1,3-Dichlorobenzene	541-73-1		NS	
1,4-Dichlorobenzene	106-46-7		NS	
1,2-Dichlorobenzene	95-50-1		NS	
1,2-Dibromo-3-chloropropane	96-12-8		NS	
1,2,4-Trichlorobenzene	120-82-1		NS	

Note: Sample detection limit may be elevated due to sample concentration.
N/S - Not Specified
TBD – To Be Determined
**See Attachment D for the list of compounds and reporting limits provided by the laboratory.

QAPP Worksheet #15: Reference Limits and Evaluation Table (Continued)
QAPP Worksheet #15C: TCL SVOCs

Matrix: Liquid, Sludge, and Solid Waste
Analytical Group: TCL SVOCs
Concentration Level: Medium/High

Analyte	CAS Number	Project Action Limits	Project Quantitation Limit (mg/kg)	Analytical Method – SW-846 Method 8270D Detection Limits and Quantitation Limits (µg/kg)**
1,1'-Biphenyl	92-52-4	TBD	NS	See Attachment D
2,2'-oxybis(1-Chloropropane)	108-60-1		NS	
2,4,5-Trichlorophenol	95-95-4		NS	
2,4,6-Trichlorophenol	88-06-2		NS	
2,4-Dichlorophenol	120-83-2		NS	
2,4-Dimethylphenol	105-67-9		NS	
2,4-Dinitrophenol	51-28-5		NS	
2,4-Dinitrotoluene	121-14-2		NS	
2,6-Dinitrotoluene	606-20-2		NS	
2-Chloronaphthalene	91-58-7		NS	
2-Chlorophenol	95-57-8		NS	
2-Methylnaphthalene	91-57-6		NS	
2-Methylphenol (o-cresol)	95-48-7		NS	
2-Nitroaniline	88-74-4		NS	
2-Nitrophenol	88-75-5		NS	
3,3'-Dichlorobenzidine	91-94-1		NS	
3-Nitroaniline	99-09-2		NS	
4,6-Dinitro-2-methylphenol	534-52-1		NS	
4-Bromophenyl-phenylether	101-55-3		NS	
4-Chloro-3-methylphenol	59-50-7		NS	
4-Chloroaniline	106-47-8		NS	
4-Chlorophenyl-phenyl ether	7005-72-3		NS	
4-Methylphenol (p-cresol)	106-44-5		NS	
4-Nitroaniline	100-01-6		NS	
4-Nitrophenol	100-02-7		NS	
Acenaphthene	83-32-9		NS	
Acenaphthylene	208-96-8		NS	
Acetophenone	98-86-2		NS	

QAPP Worksheet #15: Reference Limits and Evaluation Table (Continued)
QAPP Worksheet #15C: TCL SVOCs (Continued)

Matrix: Liquid, Sludge, and Solid Waste
Analytical Group: TCL SVOCs
Concentration Level: Medium/High

Analyte	CAS Number	Project Action Limits*	Project Quantitation Limit (mg/kg)	Analytical Method – SW-846 Method 8270D Detection Limits and Quantitation Limits (µg/kg)**
Anthracene	120-12-7	TBD	NS	See Attachment C
Atrazine	1912-24-9		NS	
Benzaldehyde	100-52-7		NS	
Benzo(a)anthracene	56-55-3		NS	
Benzo(a)pyrene	50-32-8		NS	
Benzo(b)fluoranthene	205-99-2		NS	
Benzo(g,h,i)perylene	191-24-2		NS	
Benzo(k)fluoranthene	207-08-9		NS	
Bis(2-Chloroethoxy)methane	111-91-1		NS	
Bis-(2-Chloroethyl) ether	111-44-4		NS	
bis(2-Ethylhexyl)phthalate	117-81-7		NS	
Butylbenzylphthalate	85-68-7		NS	
Caprolactam	105-60-2		NS	
Carbazole	86-74-8		NS	
Chrysene	218-01-9		NS	
Dibenzo(a,h)anthracene	53-70-3		NS	
Dibenzofuran	132-64-9		NS	
Diethylphthalate	84-66-2		NS	
Dimethylphthalate	131-11-3		NS	
Di-n-butylphthalate	84-74-2		NS	
Di-n-octylphthalate	117-84-0		NS	
Fluoranthene	206-44-0		NS	
Fluorene	86-73-7		NS	
Hexachlorobenzene	118-74-1		NS	
Hexachlorobutadiene	87-68-3		NS	
Hexachlorocyclopentadiene	77-47-4		NS	

QAPP Worksheet #15: Reference Limits and Evaluation Table (Continued)
QAPP Worksheet #15C: TCL SVOCs (Concluded)

Matrix: Liquid, Sludge, and Solid Waste
Analytical Group: TCL SVOCs
Concentration Level: Medium/High

Analyte	CAS Number	Project Action Limits*	Project Quantitation Limit (mg/kg)	Analytical Method – SW-846 Method 8270D Detection Limits and Quantitation Limits (µg/kg)**
Hexachloroethane	67-72-1	TBD	NS	See Attachment C
Indeno(1,2,3-cd)pyrene	193-39-5		NS	
Isophorone	78-59-1		NS	
Naphthalene	91-20-3		NS	
Nitrobenzene	98-95-3		NS	
N-Nitrosodiphenylamine	86-30-6		NS	
N-Nitroso-di-n-propylamine	621-64-7		NS	
Pentachlorophenol	87-86-5		NS	
Phenanthrene	85-01-8		NS	
Phenol	108-95-2		NS	
Pyrene	129-00-0		NS	

Note: Sample detection limit may be elevated due to sample concentration.
N/S - Not Specified
TBD – To Be Determined
**See Attachment D for the list of compounds and reporting limits provided by the laboratory.

QAPP Worksheet #15: Reference Limits and Evaluation Tables (Continued)
QAPP Worksheet #15D: TCL PCBs

Matrix: Liquid, Sludge, and Solid Waste
Analytical Group: TCL PCBs
Concentration Level: Medium/High

Analyte	CAS Number	Project Action Limits	Project Quantitation Limit (mg/kg)	Analytical Method – SW-846 Method 8082A Detection Limits and Quantitation Limits (µg/kg)**
Aroclor-1016	12674-11-2	TBD	NS	Attachment C
Aroclor-1221	11104-28-2		NS	
Aroclor-1232	11141-16-5		NS	
Aroclor-1242	53469-21-9		NS	
Aroclor-1248	12672-29-6		NS	
Aroclor-1254	11097-69-1		NS	
Aroclor-1260	11096-82-5		NS	
Aroclor-1262	37324-23-5		NS	
Aroclor-1268	11100-14-4		NS	

Note:
Sample detection limit may be elevated due to sample concentration.
TBD – To Be Determined
N/S - Not Specified
**See Attachment D for the list of compounds and reporting limits provided by the laboratory.

QAPP Worksheet #15: Reference Limits and Evaluation Table (Continued)
QAPP Worksheet #15E: TCL Pesticides

Matrix: Liquid, Sludge, and Solid Waste
Analytical Group: TCL Pesticides
Concentration Level: Medium/High

Analyte	CAS Number	Project Action Limits	Project Quantitation Limit (mg/kg)	Analytical Method – SW-846 Method 8081B Detection Limits and Quantitation Limits (µg/kg)**
alpha-BHC	319-84-6	TBD	NS	See Attachment C
beta-BHC	319-85-7		NS	
delta-BHC	319-86-8		NS	
gamma-BHC (Lindane)	58-89-9		NS	
Heptachlor	76-44-8		NS	
Aldrin	309-00-2		NS	
Heptachlor epoxide	1024-57-3		NS	
Endosulfan I	959-98-8		NS	
Dieldrin	60-57-1		NS	
4,4'-DDE	72-55-9		NS	
Endrin	72-20-8		NS	
Endosulfan II	33213-65-9		NS	
4,4'-DDD	72-54-8		NS	
Endosulfan sulfate	1031-07-8		NS	
4,4'-DDT	50-29-3		NS	
Methoxychlor	72-43-5		NS	
Endrin ketone	53494-70-5		NS	
Endrin aldehyde	7421-93-4		NS	
alpha-Chlordane	5103-71-9		NS	
gamma-Chlordane	5103-74-2		NS	
Toxaphene	8001-35-2		NS	

Note: Sample detection limit may be elevated due to sample concentration.
N/S - Not Specified
TBD – To Be Determined
**See Attachment D for the list of compounds and reporting limits provided by the laboratory.

QAPP Worksheet #15: Reference Limits and Evaluation Table (Continued)
QAPP Worksheet #15F: TAL Metals + Hg

Matrix: Liquid, Sludge, and Solid Waste
Analytical Group: TAL Metals + Hg
Concentration Level: Medium/High

Analyte	CAS Number	Project Action Limits	Project Quantitation Limit (mg/kg)	Analytical Method – SW-846 Methods 6010C, 7470A and 9012 Detection Limits and Quantitation Limits (mg/kg)**
Aluminum	7429-90-5	TBD	NS	See Attachment C
Antimony	7440-36-0		NS	
Arsenic	7440-38-2		NS	
Barium	7440-39-3		NS	
Beryllium	7440-41-7		NS	
Cadmium	7440-43-9		NS	
Calcium	7440-70-2		NS	
Chromium	7440-47-3		NS	
Cobalt	7440-48-4		NS	
Copper	7440-50-8		NS	
Iron	7439-89-6		NS	
Lead	7439-92-1		NS	
Magnesium	7439-95-4		NS	
Manganese	7439-96-5		NS	
Nickel	7440-02-0		NS	
Potassium	7440-09-7		NS	
Selenium	7782-49-2		NS	
Silver	7440-22-4		NS	
Sodium	7440-23-5		NS	
Thallium	7440-28-0		NS	
Vanadium	7440-62-2		NS	
Zinc	7440-66-6		NS	
Mercury	7439-97-6		NS	

Note: Sample detection limit may be elevated due to sample concentration.
N/S - Not Specified
TBD – To Be Determined
**See Attachment D for the list of compounds and reporting limits provided by the laboratory.

QAPP Worksheet #15: Reference Limits and Evaluation Table
QAPP Worksheet #15G: Full TCLP

Matrix: Liquid, Sludge, and Solid
Analytical Group: Full TCLP
Concentration Level: Low

TCLP Compound	Regulatory Level mg/L*	Achievable Quantitation Limit SW-846 EPA Method 6010C and EPA Method 7470A/SW-846 Method 8260B/SW-846 Method 8270C/SW-846 Method 8081B/SW846 Method 8151A(µg/L) **
TCLP VOCs		
Benzene	0.5	See Attachment C
2-Butanone	200	
Carbon Tetrachloride	0.5	
Chlorobenzene	100	
Chloroform	6.0	
1,4-Dichlorobenzene	7.5	
1,2-Dichloroethane	0.5	
1,1-Dichloroethene	0.7	
Tetrachloroethene	0.7	
Trichloroethene	0.5	
Vinyl Chloride	0.2	
TCLP SVOCs		
m-Cresol and p-Cresol	200	See Attachment C
o-Cresol	200	
Pentachlorophenol	100	
2,3,5-Trichlorophenol	400	
2,4,6-Trichlorophenol	2.0	
1,4-Dichlorobenzene	7.5	
2,4-Dinitrotoluene	0.130	
Hexachlorobenzene	0.130	
Hexachloro-1,3-butadiene	0.5	
Hexachloroethane	3.0	
Nitrobenzene	2.0	
Pyridine	5.0	

QAPP Worksheet #15: Reference Limits and Evaluation Table
QAPP Worksheet #15G: Full TCLP (concluded)

Matrix: Liquid, Sludge, and Solid
Analytical Group: Full TCLP
Concentration Level: Low

TCLP Compound	Regulatory Level mg/L*	Achievable Quantitation Limit SW-846 EPA Method 6010C and EPA Method 7470A/SW-846 Method 8260B/SW-846 Method 8270C/SW-846 Method 8081B/SW846 Method 8151A (µg/L) **
TCLP Pesticides		
Lindane	0.4	See Attachment C
Chlordane	0.03	
Endrin	0.02	
Heptachlor	0.008	
Heptachlor Epoxide	0.008	
Methoxychlor	10.0	
Toxaphene	0.5	
TCLP Herbicides		
2,4-D	0.010	See Attachment C
2,4,5-TP (Silvex)	0.001	
TCLP Metals		
Arsenic	5.0	See Attachment C
Barium	100	
Cadmium	1.0	
Chromium	5.0	
Lead	5.0	
Mercury	0.2	
Selenium	1.0	
Silver	5.0	

Note: Sample detection limit may be elevated due to sample concentration.
N/S - Not Specified
TBD – To Be Determined
**See Attachment D for the list of compounds and reporting limits provided by the laboratory.

QAPP Worksheet #16: Project Schedule/Timeline Table

Activities	Organization	Dates (MM/DD/YY)		Deliverable	Deliverable Due Date
		Anticipated Date(s) of Initiation	Anticipated Date of Completion		
Preparation of QAPP	RST 3 Contractor SPM	Prior to sampling date	6/16/17	QAPP	6/19/17
Review of QAPP	RST 3 Contractor QAO and/or Group Leader	Prior to sampling date	6/16/17	Approved QAPP	6/19/17
Preparation of HASP	RST 3 Contractor SPM	Prior to sampling date	6/13/17	HASP	6/19/17
Procurement of Field Equipment	RST 3 Contractor SPM and/or Equipment Officer	Prior to sampling date	6/13/17	NA	NA
Laboratory Request	Not Applicable	Prior to sampling date	6/13/17	CLP Request Form	NA
Field Reconnaissance/Access	RST 3 Contractor SPM; or EPA Region II OSC	NA	NA	NA	NA
Collection of Field Samples	RST 3 Contractor SPM	6/19/17	6/20/17	NA	NA
Laboratory Electronic Data Received	Non-CLP Laboratory	1 Week from receipt of samples	1 Week from receipt of samples	Preliminary Data	--
Laboratory Package Received	Non-CLP Laboratory	2 Week from receipt of samples	2 Week from receipt of samples	Hard Copy Data Package	--
Validation of Laboratory Results	Non-CLP Laboratory	6 Weeks from receipt of samples	6 Weeks from receipt of samples	Validated Data	--
Data Evaluation/ Preparation of Final Report	RST 3 Contractor SPM	6/30/17	7/7/17	Final Report	7/10/17

NA – Not Applicable

QAPP Worksheet #17: Sampling Design and Rationale

As part of Phase II the Removal Assessment at the Site, RST 3 is tasked with conducting a container inventory for the containers identified during Phase I of the Removal Assessment, and performing HazCat field screening of the contents in each container. Based on HazCat results, up to 20 solid, sludge, and liquid waste samples will be collected from containers selected by the EPA OSC, and will be analyzed for RCRA Characteristics, TCL VOCs, SVOCs, PCBs, pesticides, TAL metals, including Hg, and TCLP. QA/QC samples will not be collected by RST 3 for any matrices during the sampling event. RST 3 will perform all sampling in Level B or Level C personal PPE. It is anticipated that the Removal Assessment activities will be completed in three days.

HazCat Field Screening

After inspecting a drum or container for evidence of pressure build up, the container will be opened. The contents of each container will be extracted using dedicated, disposable coliwasas, drum thieves, bailers or plastic scoops, and transferred into 2 oz. glass sample jars. Material within each 2 oz. glass sample jar will be used for HazCat field screening. Extraction of drum and container contents will be conducted in accordance with guidelines outlined in EPA's Environmental Response Team (ERT) Scientific Engineering Response and Analytical Services (SERAS) contractor Standard Operating Procedure (SOP) #2009: *Drum Sampling*.

This HazCat field screening design is based on information currently available and may be modified on-site in light of field-screening results and other acquired information. The specific HazCat field tests conducted will be dictated by the EPA OSC and may include the following:

1.) Clarity
2.) Air Reactivity
3.) Water Reactivity
4.) Evaporation Test
5.) Water Solubility
6.) Xylene/Alcohol Solubility
7.) PH Test
8.) Peroxide Test
9.) Oxidizer/Acid Test
10.) Sulfide Test
11.) Combustibility Test
12.) Cyanide
13.) Chloride Test
14.) Iodine Crystal Test

Drum/Container Sampling

Based on the results of HazCat field screening, the EPA OSC will identify containers for additional analytical sampling. Drum and container sampling will be conducted in accordance with guidelines outlined in EPA's ERT SERAS SOP #2009, and EPA's ERT SERAS SOP # 2001: *General Field Sampling Guidelines*. After inspecting a drum or container for evidence of pressure build up, the container will be opened. The contents of selected drums and containers will be extracted using dedicated, disposable coliwasas, bailers, drum thieves, or plastic scoops and placed into 8 oz. glass

QAPP Worksheet #17: Sampling Design and Rationale (Concluded)

sample jars. Sample jars will be labeled based on their RST 3 container number and will be submitted to the laboratory for the requested analyses.

The following laboratory will provide the requested analyses:

Lab Name/Location	Sample Type	Parameters
ALS Environmental 34 Dogwood Lane Middletown, PA 17057	Liquid, solid, and sludge waste	RCRA Characteristics, TCL VOCs, SVOCs, PCBs, Pesticides, TAL Metal + Hg, and Full TCLP

Refer to Worksheet #20 for QA/QC samples, sampling methods, and SOPs.

QAPP Worksheet #18: Sampling Locations and Methods/SOP Requirements Table

Matrix	Sampling Location(s)	Units	Analytical Group(s)	Concentration Level	No. of Samples (identify field duplicates)	Sampling SOP Reference	Rationale for Sampling Location
Liquid/ Sludge/Solid Waste	Up to 20	µg/L / mg/L; µg/Kg / mg/kg	RCRA Characteristics, TCL VOCs, SVOCs, PCBs, Pesticides, TAL metals, including Hg and Full TCLP	Medium/High	NA	EPA ERT SOP #: 2001, 2009, 2010	Site Contamination Investigation

NA – Not applicable
The website for EPA ERT SOPs is: http://www.ert.org/mainContent.asp?section=Products&subsection=List

QAPP Worksheet #19: Analytical SOP Requirements Table

Matrix	Number of Samples	Analytical Group [Lab Assignment]	Concentration Level	Analytical and Preparation Method/SOP Reference	Sample Volume	Containers (number, size, and type)	Preservation Requirements	Maximum Holding Time (preparation/ analysis)
Liquid Waste	Up to 20	RCRA Characteristics	Medium/High	SW-846 7.3.3, SW-846 7.3.4, EPA Method 1010 and EPA Method 9040/9045D	230 ml	(1) 8 oz amber glass jar w/Teflon lined cap	Cool to 4°C	As soon as possible
		TCL VOCs	Medium/High	SW 846, Method 8260B	115 ml	(1) 4 oz glass jar w/Septum Teflon lined cap	Cool to 4°C	14 days extract; 40 days analyze
		TCL SVOCs	Medium/High	SW 846, Method 8270D	230 ml	(1) 8 oz amber glass jar w/Teflon lined cap	Cool to 4°C	7 days extract; 40 days analyze
		TCL PCBs	Medium/High	SW 846, Method 8082A	230 ml	(1) 8 oz amber glass jar w/Teflon lined cap	Cool to 4°C	7 days extract; 40 days analyze
		TCL Pesticides	Medium/High	SW 846, Method 8081A	230 ml	(1) 8 oz amber glass jar w/Teflon lined cap	Cool to 4°C	7 days extract; 40 days analyze
		TAL Metals (including Hg)	Medium/High	SW 846, Method 6010C and7470A	230 ml	(1) 8 oz amber glass jar w/Teflon lined cap	Cool to 4°C	180 days (Hg-28 days)

Note: Due to high concentration sample matrices, less volume may be collected. Liquid samples for VOCs may be collected in (1) 4oz glass jar instead of VOA vials. All other analyses will be collected in 8 oz amber glass jars

QAPP Worksheet #19: Analytical SOP Requirements Table (Concluded)

Matrix	Number of Samples	Analytical Group [Lab Assignment]	Concentration Level	Analytical and Preparation Method/SOP Reference	Sample Volume	Containers (number, size, and type)	Preservation Requirements	Maximum Holding Time (preparation/ analysis)
Solid Sludge/solid waste	20	RCRA Characteristics	Medium/High	SW-846 7.3.3, SW-846 7.3.4, EPA Method 1010 and EPA Method 9040/9045D	100 grams	(1) 8 oz. glass jar w/Teflon lined cap	Cool to 4°C	As soon as possible
		TCL VOCs	Medium/High	SW 846, Method 8260B	150 grams	(1) 4 oz. glass jar with	Cool to 4°C	14 days (4 oz. glass jar w/septum)
		TCL SVOCs	Medium/High	SW 846, Method 8270D	150 grams	(1) 8 oz. glass jar w/Teflon lined cap	Cool to 4°C	14 days extract; 40 days analyze
		TCL PCB	Medium/High	SW 846, Method 8082A	150 grams	Included with Pesticides	Cool to 4°C	14 days extract; 40 days analyze
		TCL Pesticide	Medium/High	SW 846, Method 8081A	150 grams	(1) 8 oz. glass jar w/Teflon lined cap	Cool to 4°C	14 days extract; 40 days analyze
		TAL Metals (including Hg)	Medium/High	SW 846, Method 6010C, 7471A and 9012B	Fill to capacity	(1) 8 oz. glass jar w/Teflon lined cap	Cool to 4°C	180 days Metals 28 days Mercury Hg, and 14 days for CN
		TCLP VOCs	Medium/High	SW 846, Method 8260B	rams	4 oz. glass jar with septum	Cool to 4°C	14 days (4 oz. glass jar w/septum)
		TCLP SVOCs	Medium/High	SW 846, Method 8270D	150 150 grams	(1) 8 oz. glass jar w/Teflon lined cap	Cool to 4°C	14 days extract; 40 days analyze
		TCLP PCB	Medium/High	SW 846, Method 8082A	150 grams	Included with Pesticides[1]	Cool to 4°C	14 days extract; 40 days analyze
		TCLP Pesticide	Medium/High	SW 846, Method 8081A	150 grams	(1) 8 oz. glass jar w/Teflon lined cap	Cool to 4°C	14 days extract; 40 days analyze
		TCLP Herbicide	Medium/High	SW 846, Method 8151A	150 grams	(1) 8 oz. glass jar w/Teflon lined cap	Cool to 4°C	14 days extract; 40 days analyze
		TCLP Metals (including Hg)	Medium/High	SW 846, Method 6010C, 7471A and 9012B	Fill to capacity	(1) 8 oz. glass jar w/Teflon lined cap	Cool to 4°C	180 days Metals 28 days Mercury Hg, and 14 days for CN

Note: Due to sample concentrations levels, sample containers may be modified.

QAPP Worksheet #20: Field Quality Control Sample Summary Table

Matrix	Analytical Group	Concentration Level	Analytical and Preparation SOP Reference	No. of Sampling Locations	No. of Field Duplicate Pairs	No. of Extra Volume Laboratory QC (e.g., MS/MSD) Samples[1]	No. of Rinsate Blanks*	No. of Trip. Blanks	No of PE Samples	Total No. of Samples to Lab
Aqueous/ Liquid, Solid, Sludge (Waste)	RCRA Characteristics	Medium/ High	SW-846 7.3.3, SW-846 7.3.4, EPA Method 1010 and EPA Method 9040/9045D	Up to 20	NR	NR	NR	NR	NR	Up to 20
	TCL/ TCLP VOCs, SVOCs, PCBs, and Pesticides, Herbicides	Medium/High	SW 846, Method 8260C, 8270D, 8081B, 8082A, 8151A							
	TAL Metals, including Hg and CN, TCLP Metals	Medium/High	SW 846, Method 6010C,7470A, and 9012B							

NR – Not required
1 – Samples will be collected for screening data. Field duplicate and MS/MSD samples will not be collected.

QAPP Worksheet #21: Project Sampling SOP References Table

Reference Number	Title, Revision Date and/or Number	Originating Organization	Equipment Type	Modified for Project Work? (Y/N)	Comments
SOP#2001	General Field Sampling Guidelines (all media); Rev. 0.0 August 1994	EPA/OSWER/ERT	Site-Specific	N	None
SOP#2009	Drum Sampling; Rev 0.0 November 1994	EPA/OSWER/ERT	Drum Thief or Coliwasa	N	None
SOP #2010	Tank Sampling; Rev. 0.0 November 1994	EPA/OSWER/ERT	Site-Specific	N	None

See Attachment B for EPA ERT SOPs.

Note: The website for EPA ERT SOPs is: www.ert.org/mainContent.asp?section=Products&subsection=List

QAPP Worksheet #22: Field Equipment Calibration, Maintenance, Testing, and Inspection Table

Field Equipment	Calibration Activity	Maintenance Activity	Testing/ Inspection Activity	Frequency	Acceptance Criteria	Corrective Action	Responsible Person	SOP Reference
MultiRAE Plus Incl. PID	Calibrate with Zero Air; LEL: 2.5% (50% LEL) O_2: 18% H_2S: 10 ppm CO: 50 ppm PID: 100 ppm Isobutylene	Check/ replace battery/ Clean tip or bulb if necessary	Bump Test	Prior to day's activities; anytime anomaly suspected	LEL: 48-52% LEL (2% LEL) O_2: 17-19% (1%) H_2S: 9-11 ppm (1 ppm) CO: 48-52 ppm (2 ppm) PID: 95-105 ppm Isobutylene (5 ppm)	Replace battery or Replace Unit	Equipment Vendor	--

QAPP Worksheet #23: Analytical SOP References Table

Reference Number	Title, Revision Date, and/or Number	Definitive or Screening Data	Analytical Group	Instrument	Organization Performing Analysis	Modified for Project Work? (Y/N)*
SW-846	SW 846 Test Methods for Evaluating Solid Waste, Physical/Chemical Methods, Aug 2006	Screening Data	RCRA Characteristics	Closed Cup Tester, pH Meter, Titrimetric or manual Spectrophotometric	Non-CLP RST 3-Procured Laboratory	N
SW-846	SW 846 Test Methods for Evaluating Solid Waste, Physical/Chemical Methods, Aug 2006	Screening Data	TCL / TCLP VOCs	GC/MS	Non-CLP RST 3-Procured Laboratory	N
SW-846	SW 846 Test Methods for Evaluating Solid Waste, Physical/Chemical Methods; Feb 2007	Screening Data	TCL / TCLP SVOCs	GC/MS	Non-CLP RST 3-Procured Laboratory	N
SW-846	SW 846 Test Methods for Evaluating Solid Waste, Physical/Chemical Methods, Feb 2007	Screening Data	TCL / TCLP Pesticides	GC/ECD	Non-CLP RST 3-Procured Laboratory	N
SW-846	SW 846 Test Methods for Evaluating Solid Waste, Physical/Chemical Methods, Feb 2007	Screening Data	TCLP Herbicides	GC/ECD	Non-CLP RST 3-Procured Laboratory	N
SW-846	SW 846 Test Methods for Evaluating Solid Waste, Physical/Chemical Methods, Feb 2007	Screening Data	TCL PCBs	GC/ECD	Non-CLP RST 3-Procured Laboratory	N
SW-846	SW 846 Test Methods for Evaluating Solid Waste, Physical/Chemical Methods, Feb 2007	Screening Data	TAL Metals + Hg and TCLP Metals	ICP-AES (Metals) CVAA for (Hg)	Non-CLP RST 3-Procured Laboratory	N

CVAA - Cold Vapor Atomic Absorption

QAPP Worksheet #24: Analytical Instrument Calibration Table

Instrument	Calibration Procedure	Frequency of Calibration	Acceptance Criteria	Corrective Action (CA)	Person Responsible for CA	SOP Reference
GC/MS	SW-846 Methods	Initial calibration: upon award of the contract, whenever the laboratory takes corrective action which may change or affect the initial calibration criteria (e.g., ion source cleaning or repair, column replacement, etc.), or if the continuing calibration acceptance criteria have not been met. Continuing calibration: Once every 12 hours.	Initial calibration/ Continuing calibration: relative response factor (RRF) greater than or equal to minimum acceptable response factor listed in procedure; %RSD must be less than or equal to value listed in procedure.	Initial calibration: inspect system for problems (e.g., clean ion source, change the column, service the purge and trap device), correct problem, re-calibrate. Continuing calibration: inspect system, recalibrate the instrument, reanalyze samples.	EPA Non-CLP RAS Laboratory GC/MS Technician	SW 846 Methods
GC/ECD	SW 846 Methods	Initial calibration: upon award of the contract, whenever major instrument maintenance or modification is performed or if the calibration verification technical acceptance criteria have not been met. Calibration verification: Once every 12 hours.	Initial calibration/ Calibration verification: resolution between two adjacent peaks must be greater than or equal to 60.0 percent, single components must be greater than or equal to 90.0 percent resolved, RTs within the RT window, %D must be greater than or equal to -25 percent and less than or equal to 25 percent, %RSD must be less than or equal to 20.0 percent.	Initial calibration: inspect the system (e.g., change the column, bake out the detector, clean the injection port), correct problem, recalibrate. Calibration verification: inspect system, recalibrate the instrument, reanalyze samples.	EPA Non-CLP RAS Laboratory GC/ECD Technician	SW 846 Methods
ICP-AES/ICP-MS	See SW-846; as per instrument manufacturer's recommended procedures	ICP-AES or ICP-MS Initial calibration: daily or once every 24 hours and each time the instrument is set up. ICP-AES or ICP-MS Continuing calibration: beginning and end of run, and frequency of 10% or every 2 hours during an analysis run.	ICP-AES: As per instrument manufacturer's recommended procedures, with at least 2 standards. ICP-MS: As per instrument manufacturer's recommended procedures, with at least 2 standards. A minimum of three replicate integrations are required for data acquisition.	ICP-AES or ICP-MS: inspect the system, correct problem, re-calibrate, reanalyze samples.	EPA Non-CLP RAS Laboratory ICP-AES/ICP-MS Technician	SW 846 Method 6010B/7471
Spectrophoto-metric	As per instrument manufacturer's recommended procedures	Spectrophotometer Initial calibration: daily or once every 24 hours and each time the instrument is set up. Spectrophotometer Continuing calibration: beginning and end of run, and frequency of 10% or every 2 hours during an analysis run.	Spectrophotometer: As per instrument manufacturer's recommended procedures, with at least 2 standards.	Spectrophotometric – Inspection System, correct protocol, re-calibrate, and analyze samples	EPA Non-CLP RAS Laboratory Spectrophotometric Technician	SW 846 Methods

QAPP Worksheet #24: Analytical Instrument Calibration Table (Concluded)

Instrument	Calibration Procedure	Frequency of Calibration	Acceptance Criteria	Corrective Action (CA)	Person Responsible for CA	SOP Reference
CVAA	As per instrument manufacturer's recommended procedures	CVAA; as per instrument manufacturer's recommendations	CVAA: As per instrument manufacturer's recommended procedures, with at least 2 standards.	Acceptable re-calibration	EPA Non-CLP RAS Laboratory CVAA Technician	SW 846 Methods

CVAA – Cold Vapor Atomic Absorption

QAPP Worksheet #25: Analytical Instrument and Equipment Maintenance, Testing, and Inspection Table

Instrument/ Equipment	Maintenance Activity	Testing/Inspection Activity	Frequency	Acceptance Criteria	Corrective Action	Responsible Person	SOP Reference
GC/MS	See SW-846; as per instrument manufacturer's recommendation	See SW-846; as per instrument manufacturer's recommendation	See SW-846; as per instrument manufacturer's recommendation	Acceptable re-calibration; see SW-846	Inspect the system, correct problem, re-calibrate and/or reanalyze samples	EPA Non-CLP RAS Laboratory GC/MS Technician	SW 846
GC/ECD	See SW-846; as per instrument manufacturer's recommendation	See SW-846; as per instrument manufacturer's recommendation	As per instrument manufacturer's recommendation	Acceptable re-calibration; see SW-846	Inspect the system, correct problem, re-calibrate and/or reanalyze samples	EPA Non-CLP RAS Laboratory GC/ECD Technician	SW 846
ICP-AES/ICP-MS	As per instrument manufacturer's recommendation	As per instrument manufacturer's recommendation	See SW-846; as per instrument manufacturer's recommendation	Acceptable re-calibration; see SW-846	Inspect the system, correct problem, re-calibrate and/or reanalyze samples	EPA Non-CLP RAS Laboratory ICP-AES/ICP-MS Technician	SW 846
Spectrophotometric	As per instrument manufacturer's recommended procedures	As per instrument manufacturer's recommended procedures	As per instrument manufacturer's recommended procedures	Acceptable re-calibration	Spectrophotometric – Inspection System, correct protocol, re-calibrate, and analyze samples	EPA Non-CLP RAS Laboratory Spectrophotometric Technician	SW 846
CVAA	As per instrument manufacturer's recommended procedures	As per instrument manufacturer's recommended procedures	As per instrument manufacturer's recommended procedures	Acceptable re-calibration	Inspect the system, correct problem, re-calibrate and/or reanalyze samples.	EPA Non-CLP RAS Laboratory CVAA Technician	SW 846

CVAA – Cold Vapor Atomic Absorption

QAPP Worksheet #26: Sample Handling System

SAMPLE COLLECTION, PACKAGING, AND SHIPMENT
Sample Collection (Personnel/Organization): RST 3 Site Project Manager, Weston Solutions, Inc., Region II
Sample Packaging (Personnel/Organization): RST 3 Site Project Manager, Weston Solutions, Inc., Region II
Coordination of Shipment (Personnel/Organization): RST 3 Site Project Manager, Weston Solutions, Inc., Region II
Type of Shipment/Carrier: FedEx and/or Hand-Delivered
SAMPLE RECEIPT AND ANALYSIS
Sample Receipt (Personnel/Organization): Non-CLP/RST 3-procured Laboratories
Sample Custody and Storage (Personnel/Organization): Non-CLP/RST 3-procured Laboratories
Sample Preparation (Personnel/Organization): Non-CLP/RST 3-procured Laboratories
Sample Determinative Analysis (Personnel/Organization): Non-CLP/RST 3-procured Laboratories
SAMPLE ARCHIVING
Field Sample Storage (No. of days from sample collection): All samples will be shipped same day or within 24 hours of collection
Sample Extract/Digestate Storage (No. of days from extraction/digestion): As per analytical methodology; see Worksheet #19
SAMPLE DISPOSAL
Personnel/Organization: Non-CLP/RST 3-procured Laboratories
Number of Days from Analysis: Up to 60 days; Until analysis and QA/QC checks are completed; as per analytical methodology; see Worksheet #19.

QAPP Worksheet #27: Sample Custody Requirements

Sample Identification Procedures: Each sample will be labeled with the site identification code and a sample type letter code and number that depicts a specific location. Depending on the type of sample, additional information such as depth, sampling round, date, etc. will be added. Examples of matrices are: LW= Container Liquid Waste; SW= Container Solid Waste. Example sample locations are:

1.) Liquid waste samples will be designated as: P001-LW-001 (Property P001, Liquid Waste collected from container 001, Sample number 01).
2.) Solid/sludge waste samples will be designated as: P001-SW-001 (Property P001, Solid Waste collected from container 001, Sample number 01).

Location of the sample collected will be recorded in the project database and site logbook. Depending on the type of sample, additional information such as sampling round, date, time etc. will be added.

QAPP Worksheet #27: Sample Custody Requirements (Concluded)

Field Sample Custody Procedures (sample collection, packaging, shipment, and delivery to laboratory): Each sample will be individually identified and labeled after collection, then sealed with custody seals and enclosed in a plastic cooler. The sample information will be recorded on chain-of custody (COC) forms, and the samples hand delivered to the appropriate laboratory by RST 3. Chain-of-custody records must be prepared in Scribe database for all samples to accompany samples from the time of collection and throughout the shipping process. Each individual in possession of the samples must sign and date the sample COC Record. The chain-of-custody record will be considered completed upon receipt at the laboratory. A traffic report and chain-of-custody record will be maintained from the time the sample is taken to its final deposition. Every transfer of custody must be noted and signed for, and a copy of this record kept by each individual who has signed. When samples are not under direct control of the not under direct control of the individual responsible for them, they must be stored in a locked container sealed with a custody seal. Specific information regarding custody of the samples projected to be collected on the weekend will be noted in the field logbook. The chain-of-custody record should include (at minimum) the following: 1) Sample identification number; 2) Sample information; 3) Sample location; 4) Sample date; 5) Sample Time; 6) Sample Type Matrix; 7) Sample Container Type; 8) Sample Analysis Requested; 9) Name(s) and signature(s) of sampler(s); and 10) Signature(s) of any individual(s) with custody of samples.
Laboratory Sample Custody Procedures (receipt of samples, archiving, disposal): A sample custodian at the laboratory will accept custody of the shipped samples, and check them for discrepancies, proper preservation, integrity, etc. If noted, issues will be forwarded to the laboratory manager for corrective action. The sample custodian will relinquish custody to the appropriate department for analysis. At this time, no samples will be archived at the laboratory. Disposal of the samples will occur only after analyses and QA/QC checks are completed.

QAPP Worksheet #28: QC Samples Table
QAPP Worksheet #28A: TCL and TCLP VOCs

(UFP-QAPP Manual Section 3.4)

Complete a separate worksheet for each sampling technique, analytical method/SOP, matrix, analytical group, and concentration level. If method/SOP QC acceptance limit exceed the measurement performance criteria, the data obtained may be unusable for making project decisions.

Matrix	Liquid, Sludge, and Solid Waste
Analytical Group	TCL / TCLP VOCs
Concentration Level	Medium/High (mg/kg)
Sampling SOP(s)	EPA/ERT SOP No. 2001 and 2012
Analytical Method/SOP Reference	SW 846 Method 8260C/SOP# HW-24, Rev. 2
Sampler's Name	RST 3
Field Sampling Organization	Weston Solutions, Inc.
Analytical Organization	ALS Environmental
No. of Sample Locations	Up to 15

Lab QC Sample:	Frequency/ Number	Method/SOP QC Acceptance Limits		Corrective Action	Person(s) Responsible for Corrective Action	Data Quality Indicator (DQI)	Measurement Performance Criteria	
Method Blank	1 every 12 hours	No analyte > CRQL*		Suspend analysis unit source recertified	Subcontracted RAS Laboratory GC/MS Technician	Accuracy	No analyte > CRQL*	
* Matrix Spike	1 per ≤ 20 samples; if requested	1,1-Dichloroethene	70-130 %R	Flag outliers, conjunction with other QC criteria.	Subcontracted RAS/non-RAS Laboratory GC/MS Technician	Accuracy	1,1-Dichloroethene	70-130 %R
		Trichloroethene	70-130 %R				Trichloroethene	70-130 %R
		Benzene	70-130 %R				Benzene	70-130 %R
		Toluene	70-130 %R				Toluene	70-130 %R
* Matrix Spike Duplicate	1 per ≤ 20 samples; if requested	1,1-Dichloroethene	0-20 %RPD	Flag outliers, conjunction with other QC criteria.	Subcontracted RAS/non-RAS Laboratory GC/MS Technician	Precision	1,1-Dichloroethene	0-20 %RPD
		Trichloroethene	0-20 %RPD				Trichloroethene	0-20 %RPD
		Benzene	0-20 %RPD				Benzene	0-20 %RPD
		Toluene	0-20 %RPD				Toluene	0-20 %RPD
Surrogate Recovery	All Samples	4-Bromofluorobenzene	70-130%R	Check calculations and instruments, reanalyze affected samples; up to 3 DMCs per sample may fail to meet necessary limits (follow SOP: HW-24 for qualifications)	Subcontracted RAS/non-RAS Laboratory GC/MS Technician	Accuracy	4-Bromofluorobenzene	70-130%R
		Dibromofluoromethane					Dibromofluoromethane	
		Toluene-d8					Toluene-d8	
		1,2-Dichloroethane-d4					Dichloroethane-d4	

[1]Laboratory spike entire list of compounds, but at the minimum, above compounds are require. For MS/MSD and LCS Laboratory can also use in house performance criteria.
Note: Samples will be collected for screening data; MS/MSD and Field duplicate samples will not be collected.

QAPP Worksheet #28: QC Samples Table (Continued)
QAPP Worksheet #28A: TCL and TCLP VOCs (Concluded)

(UFP-QAPP Manual Section 3.4)
Complete a separate worksheet for each sampling technique, analytical method/SOP, matrix, analytical group, and concentration level. If method/SOP QC acceptance limit exceed the measurement performance criteria, the data obtained may be unusable for making project decisions.

Matrix	Liquid, Sludge, and Solid Waste
Analytical Group	TCL / TCLP VOCs [concluded]
Concentration Level	Medium (mg/kg)
Sampling SOP(s)	EPA/ERT SOP No. 2001 and 2012
Analytical Method/SOP Reference	SW 846 Method 8260C/SOP# HW-24, Rev. 2
Sampler's Name	RST 3
Field Sampling Organization	Weston Solutions, Inc.
Analytical Organization	ALS Environmental
No. of Sample Locations	Up to 15

Lab QC Sample:	Frequency/ Number	Method/SOP QC Acceptance Limits	Corrective Action	Person(s) Responsible for Corrective Action	Data Quality Indicator (DQI)	Measurement Performance Criteria[1]
Internal Standards	all samples	50-200% of area, ± 10 sec retention time shift	Check calculations and instruments, reanalyze affected samples; up to 3 DMCs per sample may fail to meet necessary limits	Subcontracted RAS/non-RAS Laboratory GC/MS Technician	Accuracy	50-200% of area, ± 10 sec tention time shift
LCS	1 per ≤ 20 samples; if requested	70-130 %R %RPD < 20	Flag outliers	Subcontracted RAS/non-RAS Laboratory GC/MS Technician	Accuracy Precision	70-130 %R %RPD < 20
Field Duplicate	1 per ≤ 20 samples; if requested	%RPD < 50	Check calculation, and Flag outliers	Subcontracted RAS/non-RAS Laboratory GC/MS Technician	Accuracy	% RPD < 50

* Laboratory can also use in house performance criteria
Note: Samples will be collected for screening data; MS/MSD and Field duplicate samples will not be collected.

QAPP Worksheet #28: QC Samples Table (Continued)
QAPP Worksheet #28B: TCL and TCLP SVOCs

(UFP-QAPP Manual Section 3.4)
Complete a separate worksheet for each sampling technique, analytical method/SOP, matrix, analytical group, and concentration level. If method/SOP QC acceptance limit exceed the measurement performance criteria, the data obtained may be unusable for making project decisions.

Matrix	Liquid, Sludge, and Solid Waste
Analytical Group	TCL / TCLP SVOCs
Concentration Level	Medium/High (mg/kg)
Sampling SOP(s)	EPA/ERT SOP No. 2001 and 2012
Analytical Method/SOP Reference	SW 846 Method 8270D/SOP# HW-22, Rev. 3
Sampler's Name	RST 3
Field Sampling Organization	Weston Solutions, Inc.
Analytical Organization	ALS Environmental
No. of Sample Locations	Up to 15

Lab QC Sample:	Frequency/ Number	Method/SOP QC Acceptance Limits		Corrective Action	Person(s) Responsible for Corrective Action	Data Quality Indicator (DQI)	Measurement Performance Criteria	
Method Blank	1 per ≤ 20 samples or whenever samples extracted	No analyte > CRQL*		Suspend analysis unit source recertified	Weston Subcontracted RAS/non-RAS Laboratory GC/MS Technician	Accuracy	No analyte > CRQL*	
* Matrix Spike	1 per ≤ 20 samples; if requested	Phenol	In House MS/MSD Recovery Or (See SW 846 Method 8270D, Table 6)	No action is taken on MS/MSD data alone. Qualify data in conjunction with other QC criteria	Weston Subcontracted RAS/non-RAS Laboratory GC/MS Technician	Accuracy	Phenol	In House MS/MSD Recovery Or (See SW 846 Method 8270D, Table 6
		2-Chlorophenol					2-Chlorophenol	
		N-Nitroso-di-n-propylamine					N-Nitroso-di-n-propylamine	
		4-Chloro-3-methylphenol					4-Chloro-3-methylphenol	
		Acenaphthene					Acenaphthene	
		4-Nitrophenol					4-Nitrophenol	
		2,4-Dinitrotoluene					2,4-Dinitrotoluene	
		Pentachloro-phenol					Pentachloro-phenol	
		1,2,4-Trichlorobenzene					1,2,4-Trichlorobenzene	
		1,4-Dichlorobenzene					1,4-Dichlorobenzene	
		2-Chlorophenol					2-Chlorophenol	
		Pyrene					Pyrene	
*Matrix Spike Duplicate	1 per ≤ 20 samples; if requested	Phenol	< 20%	Flag outliers	Weston Subcontracted RAS/non-RAS Laboratory GC/MS Technician	Precision	Phenol	20 %RPD
		2-Chlorophenol					2-Chlorophenol	
		N-Nitroso-di-n-propylamine					N-Nitroso-di-n-propylamine	

QAPP Worksheet #28: QC Samples Table (Continued)
QAPP Worksheet #28B: TCL and TCLP SVOCs (Continued)

(UFP-QAPP Manual Section 3.4)
Complete a separate worksheet for each sampling technique, analytical method/SOP, matrix, analytical group, and concentration level. If method/SOP QC acceptance limit exceed the measurement performance criteria, the data obtained may be unusable for making project decisions.

Matrix	Liquid, Sludge, and Solid Waste
Analytical Group	TCL SVOCs [continued]
Concentration Level	Medium/High (mg/kg)
Sampling SOP(s)	EPA/ERT SOP No. 2001 and 2012
Analytical Method/SOP Reference	SW 846 Method 8270D/SOP# HW-22, Rev. 3
Sampler's Name	RST 3
Field Sampling Organization	Weston Solutions, Inc.
Analytical Organization	ALS Environmental
No. of Sample Locations	Up to 15

Lab QC Sample:	Frequency/ Number	Method/SOP QC Acceptance Limits		Corrective Action	Person(s) Responsible for Corrective Action	Data Quality Indicator (DQI)	Measurement Performance Criteria[1]	
*Matrix Spike Duplicate	1 per ≤ 20 samples; if requested	4-Chloro-3-methylphenol	In House MS/MSD Recovery Or (See SW 846 Method 8270D, Table 6)	No action is taken on MS/MSD data alone. Qualify data in conjunction with other QC criteria	Weston Subcontracted RAS/non-RAS Laboratory GC/MS Technician	Precision	4-Chloro-3-methylphenol	0-20 %R
		Acenaphthene					Acenaphthene	
		4-Nitrophenol					4-Nitrophenol	
		2,4-Dinitrotoluene					2,4-Dinitrotoluene	
		Pentachloro-phenol					Pentachloro-phenol	
		1,2,4-Trichlorobenzene						
		1,4-Dichlorobenzene						
		2-Chlorophenol						
		Pyrene					Pyrene	70-130 %R
Surrogate Compounds	all samples	Phenol-d5	Lab In House recovery limit or SW 846 Method 8270B-43; 8000C-24	Check calculations and instruments, reanalyze affected samples; (follow SOP: HW-22 for qualifications)	Weston Subcontracted RAS/non-RAS Laboratory GC/MS Technician	Accuracy	Phenol-d5	
		2-Fluorophenol					Bis(2-chloroethyl)ether-d8	
		2-Fluorobiphenyl					2-Chlorophenol-d4	
		2,4,6-Tribromophenol					4-Methylphenol-d8	
		Nitrobenzene-d5					Nitrobenzene-d5	
		Terphenyl-d14					2-Nitrophenol-d4	

* Laboratory can also use in house performance criteria
Note: Samples will be collected for screening data; MS/MSD and Field duplicate samples will not be collected.

QAPP Worksheet #28: QC Samples Table (Continued)
QAPP Worksheet #28B: TCL and TCLP SVOCs (Concluded)

(UFP-QAPP Manual Section 3.4) Complete a separate worksheet for each sampling technique, analytical method/SOP, matrix, analytical group, and concentration level. If method/SOP QC acceptance limit exceed the measurement performance criteria, the data obtained may be unusable for making project decisions.

Matrix	Liquid, Sludge, and Solid Waste
Analytical Group	TCL SVOCs [concluded]
Concentration Level	Medium/High (mg/kg)
Sampling SOP(s)	EPA/ERT SOP No. 2001 and 2012
Analytical Method/SOP Reference	SW 846 Method 8270D/SOP# HW-22, Rev. 3
Sampler's Name	RST 3
Field Sampling Organization	Weston Solutions, Inc.
Analytical Organization	ALS Environmental
No. of Sample Locations	Up to 15

Lab QC Sample:	Frequency/Number	Method/SOP QC Acceptance Limits	Corrective Action	Person(s) Responsible for Corrective Action	Data Quality Indicator (DQI)	Measurement Performance Criteria[1]
Internal Standards	all samples	50-100% of area, ± 30 sec retention time shift	Check calculations and instruments, reanalyze affected samples	Weston Subcontracted RAS/non-RAS Laboratory GC/MS Technician	Accuracy	50-100% of area, ± 30 sec retention time shift

*Laboratory spike entire list of compounds, but at minimum above compound required.
[1] Laboratory may use in house performance criteria.
Note: Samples will be collected for screening data; MS/MSD and Field duplicate samples will not be collected.

QAPP Worksheet #28: QC Samples Table
QAPP Worksheet #28C: TCL PCBs

(UFP-QAPP Manual Section 3.4)
Complete a separate worksheet for each sampling technique, analytical method/SOP, matrix, analytical group, and concentration level. If method/SOP QC acceptance limit exceed the measurement performance criteria, the data obtained may be unusable for making project decisions.

Matrix	Liquid, Sludge, and Solid Waste
Analytical Group	TCL PCBs
Concentration Level	Medium (mg/kg)
Sampling SOP(s)	EPA/ERT SOP No. 2001 and 2012
Analytical Method/SOP Reference	SW 846 Method 8082A/SOP# HW-45, Rev. 1
Sampler's Name	RST 3
Field Sampling Organization	Weston Solutions, Inc.
Analytical Organization	ALS Environmental
No. of Sample Locations	Up to 10

Lab QC Sample:	Frequency/ Number	Method/SOP QC Acceptance Limits		Corrective Action	Person(s) Responsible for Corrective Action	Data Quality Indicator (DQI)	Measurement Performance Criteria	
Method Blank	1 per ≤ 20 samples or whenever samples extracted	No analyte > CRQL		Suspend analysis unit source recertified	Weston Subcontracted RAS/non-RAS Laboratory GC/ECD Technician	Accuracy	No analyte > CRQL	
*Matrix Spike	1 per ≤ 20 samples	Aroclor-1016	30-150 %R	Non-CLP Laboratory GC/ECD Technician	Weston Subcontracted RAS/non-RAS Laboratory GC/ECD Technician	Accuracy	Aroclor-1016	30-150 %R
		Aroclor-1260					Aroclor-1260	
*Matrix Spike Duplicate	1 per ≤ 20 samples	Aroclor-1016		Non-CLP Laboratory GCECD Technician	Weston Subcontracted RAS/non-RAS Laboratory GC/ECD Technician	Precision	Aroclor-1016	
		Aroclor-1260					Aroclor-1260	
Laboratory Control Sample	all samples	Aroclor-1016		Non-CLP Laboratory GC/ECD Technician	Weston Subcontracted RAS/non-RAS Laboratory GC/ECD Technician	Accuracy	Aroclor-1016	
		Aroclor-1260					Aroclor-1260	
Surrogate	all samples			Non-CLP Laboratory GC/ECD Technician	Weston Subcontracted RAS/non-RAS Laboratory GC/ECD Technician	Accuracy		

Laboratory spike entire list of compounds, but at minimum above compound required.
[1]Laboratory may use in house performance criteria.
Note: Samples will be collected for screening data; MS/MSD and Field duplicate samples will not be collected.

QAPP Worksheet #28: QC Samples Table (Continued)
QAPP Worksheet #28D: TCL and TCLP Pesticides

(UFP-QAPP Manual Section 3.4)

Complete a separate worksheet for each sampling technique, analytical method/SOP, matrix, analytical group, and concentration level. If method/SOP QC acceptance limit exceed the measurement performance criteria, the data obtained may be unusable for making project decisions.

Matrix	Liquid, Sludge, and Solid Waste
Analytical Group	TCL Pesticides
Concentration Level	Medium/High (mg/kg)
Sampling SOP(s)	EPA/ERT SOP No. 2001 and 2012
Analytical Method/SOP Reference	SW-846 Method 8081B
Sampler's Name	RST 3
Field Sampling Organization	Weston Solutions, Inc.
Analytical Organization	ALS Environmental
No. of Sample Locations	Up to 15

Lab QC Sample:	Frequency/ Number	Method/SOP QC Acceptance Limits		Corrective Action	Person(s) Responsible for Corrective Action	Data Quality Indicator (DQI)	Measurement Performance Criteria	
Method Blank	1 per ≤ 20 samples or whenever samples extracted	No analyte > CRQL		Suspend analysis unit source recertified	Non-CLP Laboratory GC/ECD Technician	Accuracy	No analyte > CRQL	
*Matrix Spike	1 per ≤ 20 samples	gamma-BHC (Lindane)	30-150 %R	Flag outliers	Non-CLP Laboratory GC/ECD Technician	Accuracy	gamma-BHC (Lindane)	30-150 %R
		Heptachlor					Heptachlor	
		Aldrin					Aldrin	
		Dieldrin					Dieldrin	
		Endrin					Endrin	
		4,4-DDT					4,4-DDT	
*Matrix Spike Duplicate	1 per ≤ 20 samples	gamma-BHC	0-20 %RPD	Flag outliers	Non-CLP Laboratory GC/ECD Technician	Precision	gamma-BHC	0-20 %RPD
		Heptachlor					Heptachlor	
		Aldrin					Aldrin	
		Dieldrin					Dieldrin	
		Endrin					Endrin	
		4,4-DDT					4,4-DDT	
Laboratory Control Sample	1 per < 20 samples	gamma-BHC	50-120 %R	Check calculations and instruments, reextract and reanalyze affected samples	EPA CLP RAS Laboratory GC/ECD Technician	Accuracy	gamma-BHC	50-120 %R

Laboratory spike entire list of compounds, but at minimum above compound required.

[1]Laboratory may use in house performance criteria.

Note: Samples will be collected for screening data; MS/MSD and Field duplicate samples will not be collected.

QAPP Worksheet #28: QC Samples Table (Continued)
QAPP Worksheet # 28E: TCL Herbicides

(UFP-QAPP Manual Section 3.4)

Complete a separate worksheet for each sampling technique, analytical method/SOP, matrix, analytical group, and concentration level. If method/SOP QC acceptance limit exceed the measurement performance criteria, the data obtained may be unusable for making project decisions.

Matrix	Liquid, Sludge, and Solid Waste
Analytical Group	TCLP Herbicides
Concentration Level	Medium/High (mg/kg)
Sampling SOP(s)	EPA/ERT SOP No. 2001 and 2012
Analytical Method/SOP Reference	SW- 846 Method 8151A
Sampler's Name	RST 3
Field Sampling Organization	Weston Solutions, Inc.
Analytical Organization	ALS Environmental
No. of Sample Locations	5

Lab QC Sample:	Frequency/Number	Method/SOP QC Acceptance Limits	Corrective Action	Person(s) Responsible for Corrective Action	Data Quality Indicator (DQI)	Measurement Performance Criteria
Method Blank	1 per ≤ 20 samples OR whenever samples extracted	No analyte > CRQL	Suspend analysis unit source recertified	EPA CLP RAS Laboratory GC/ECD Technician	Accuracy	No analyte > CRQL
*Matrix Spike	1 per ≤ 20 samples; if requested	70-130 %R	Flag outliers	EPA CLP RAS Laboratory GC/ECD Technician	Accuracy	70-130 %R
*Matrix Spike Duplicate	1 per ≤ 20 samples; if requested	70-130 %R	Flag outliers	EPA CLP RAS Laboratory GC/ECD Technician	Precision	70-130 %R
Laboratory Control Sample	1 per ≤ 20 samples	70-130 %R	Check calculations and instruments, reanalyze affected samples	EPA CLP RAS Laboratory GC/ECD Technician	Accuracy	70-130 %R
Surrogate	all samples	70-130 %R		EPA CLP RAS Laboratory GC/ECD Technician	Accuracy	70-130 %R

Note: Data reviewer will examined and follow In-house QC limit to qualify the data, if in-house limits not developed, then above QC limits will be use.
*Samples will be collected for screening data. Matrix spike/ matrix spike duplicate (MS/MSD) and field duplicate samples will not be collected.

QAPP Worksheet #28: QC Samples Table (Continued)
QAPP Worksheet #28F: TAL and TCLP Metals including Mercury

(UFP-QAPP Manual Section 3.4)
Complete a separate worksheet for each sampling technique, analytical method/SOP, matrix, analytical group, and concentration level. If method/SOP QC acceptance limit exceed the measurement performance criteria, the data obtained may be unusable for making project decisions.

Matrix	Liquid, Sludge, and Solid Waste
Analytical Group	TAL Metals including Hg
Concentration Level	Medium/High (mg/kg)
Sampling SOP(s)	EPA/ERT SOP No. 2001 and 2012
Analytical Method/SOP Reference	SW 846 Method 6010C/SOP# HW-2a, Rev. 15
Sampler's Name	RST 3
Field Sampling Organization	Weston Solutions, Inc.
Analytical Organization	ALS Environmental
No. of Sample Locations	Up to 15

Lab QC Sample:	Frequency/Number	Method/SOP QC Acceptance Limits	Corrective Action	Person(s) Responsible for Corrective Action	Data Quality Indicator (DQI)	Measurement Performance Criteria
Preparation Blank	1 per ≤ 20 samples	No constituent > RL	Suspend analysis until source rectified; redigest and reanalyze affected samples	Weston Subcontracted RAS/non-RAS Laboratory ICP-AES/ICP-MS Technician	Accuracy	No constituent > RL
*Matrix Spike	1 per ≤ 20 samples	75-125%R*	Flag outliers		Accuracy	75-125%R*
*Duplicate	1 per ≤ 20 samples	± 20% RPD**	Flag outliers	Weston Subcontracted RAS/non-RAS Laboratory ICP-AES/ICP-MS Technician	Precision	± 20% RPD**
Post-Digestion Spike	after any analyte (except Ag and Hg) fails spike %R	80-120%R	Flag outliers	Weston Subcontracted RAS/non-RAS Laboratory ICP-AES/ICP-MS Technician	Accuracy	80-120%R
ICP Serial Dilution [ICP Analysis Only]	1 per ≤ 20 samples	< 10% D**	Flag outliers		Accuracy	< 10% D**
Interference Check Sample	beginning, end and periodically during run (2 times every 8 hours)	Within ± 2 times CRQL of true value or ± 20% of true value, whichever is greater	Check calculations and instruments, reanalyze affected samples	Weston Subcontracted RAS/non-RAS Laboratory ICP-AES/ICP-MS Technician	Sensitivity	Within ± 2 times CRQL of true value or ± 20% of true value, whichever is greater***

*Note: Samples will be collected for screening data; MS/MSD and Field duplicate samples will not be collected.

QAPP Worksheet #28: QC Samples Table (Continued)
QAPP Worksheet #28F: TAL and TCLP Metals (Concluded)

(UFP-QAPP Manual Section 3.4)
Complete a separate worksheet for each sampling technique, analytical method/SOP, matrix, analytical group, and concentration level. If method/SOP QC acceptance limit exceed the measurement performance criteria, the data obtained may be unusable for making project decisions.

Matrix	Liquid, Sludge, and Solid Waste
Analytical Group	TAL Metals [concluded]
Concentration Level	Medium/High (mg/kg)
Sampling SOP(s)	EPA/ERT SOP No. 2001 and 2012
Analytical Method/SOP Reference	SW 846 Method 6010C/SOP# HW-2a, Rev. 15
Sampler's Name	RST 3
Field Sampling Organization	Weston Solutions, Inc.
Analytical Organization	ALS Environmental
No. of Sample Locations	Up to 15

Lab QC Sample:	Frequency/Number	Method/SOP QC Acceptance Limits	Corrective Action	Person(s) Responsible for Corrective Action	Data Quality Indicator (DQI)	Measurement Performance Criteria
Laboratory Control Sample	1 per ≤ 20 samples	Control limits 80 - 120% R or established by EPA*	Suspend analysis until source rectified; redigest and reanalyze affected samples	Weston Subcontracted RAS/non-RAS Laboratory ICP-AES/ICP-MS Technician	Accuracy	Control limits 80 - 120% R or established by EPA*

* If the EPA LCS is unavailable, other EPA QC samples or other certified materials may be used. In such cases, control limits for the LCS must be documented and provided.
[1]Laboratory may use in house performance criteria.
Note: Samples will be collected for screening data; MS/MSD and Field duplicate samples will not be collected.

QAPP Worksheet #29: Project Documents and Records Table

Sample Collection Documents and Records	Analysis Documents and Records	Data Assessment Documents and Records	Other
• Site and field logbooks • COC forms • Field Data Sheets • GIS map for sampling locations • Photographs	• Sample receipt logs • Internal and external COC forms • Equipment calibration logs • Sample preparation worksheets/logs • Sample analysis worksheets/run logs • Telephone/email logs • Corrective action documentation	• Data validation reports • Field inspection checklist(s) • Laboratory Audit checklist (if performed) • Review forms for electronic entry of data into database • Corrective action documentation • Laboratory Final Data	CLP and non-CLP Analytical Request Form

QAPP Worksheet #30: Analytical Services Table

Matrix	Analytical Group	Concentration Level	Analytical SOP	Data Package Turnaround Time	Laboratory/Organization (Name and Address, Contact Person and Telephone Number)	Backup Laboratory/Organization (Name and Address, Contact Person and Telephone Number)
Solid/ Sludge waste	TCL / TCLP VOCs, SVOCs, PCBs, Pesticides, TCLP Herbicides, TAL metals, including mercury, and RCRA Characteristics	Medium/High	SW 846, Method 8260C, 8270D, 8081B, 8082A, SW 846, Method 6010C, 8151A, 7471A/9012B RCRA: SW 846 Chapter 7 1010/1030; 9040/9045D	1 week preliminary / 2 weeks Hard copy data package	ALS Environmental 34 Dogwood Lane Middletown, PA 17057	NA
liquid waste	TCL VOCs, SVOCs, PCBs, Pesticides, and TAL metals, including mercury, and RCRA Characteristics	Medium/High	SW 846, Method 8260C, 8270D, 8081C, 8082A, SW 846, Method 6010C, 7470A, and 9012B RCRA: SW 846 Chapter 7 1010/1030; 9040/9045D			

NA – Not Applicable
TBD – To Be Determined

QAPP Worksheet #31: Planned Project Assessments Table

Assessment Type	Frequency	Internal or External	Organization Performing Assessment	Person(s) Responsible for Performing Assessment (Title and Organizational Affiliation)	Person(s) Responsible for Responding to Assessment Findings (Title and Organizational Affiliation)	Person(s) Responsible for Identifying and Implementing Corrective Actions (Title and Organizational Affiliation)	Person(s) Responsible for Monitoring Effectiveness of Corrective Actions (Title and Organizational Affiliation)
Laboratory Technical Systems	Every Year	External	Regulatory Agency	Regulatory Agency	Non-CLP/RST 3-Procured Laboratories	Non-CLP/RST 3-Procured Laboratories	EPA or other Regulatory Agency
Performance Evaluation Samples**	--	External	Regulatory Agency	Regulatory Agency			
Peer Review	Each Deliverable	Internal	Weston Solutions, Inc.	QAO, Group Leader, and Readiness Coordinator	SPM, Weston Solutions, Inc.	SPM, Weston Solutions, Inc.	EPA OSC and/or EPA QAO

Note: Weston use all subcontracted laboratories participated in nationally accepted accreditation program.
** Weston Solutions, Inc., RST 3 office does not supply the PE samples.

QAPP Worksheet #32: Assessment Findings and Corrective Action Responses

Assessment Type	Nature of Deficiencies Documentation	Individual(s) Notified of Findings (Name, Title, Organization)	Timeframe of Notification	Nature of Corrective Action Response Documentation	Individual(s) Receiving Corrective Action Response (Name, Title, Org.)	Timeframe for Response
Project Readiness Review	Checklist or logbook entry	RST 3 SPM	Immediately to within 24 hours of review	Checklist or logbook entry	RST 3 SPM	Immediately to within 24 hours of review
Field Observations/ Deviations from Work Plan	Logbook	RST 3 SPM and EPA OSC	Immediately to within 24 hours of deviation	Logbook	RST 3 SPM and EPA OSC	Immediately to within 24 hours of deviation
Laboratory Technical Systems/ Performance Audits	Written Report	Non-CLP /RST 3-Procured Laboratories	30 days	Letter	Non-CLP Laboratory	14 days
On-Site Field Inspection	Written Report	QAO/HSO, Weston Solutions, Inc.	7 calendar days after completion of the audit	Letter/Internal Memorandum	Contractor regional QAO and/or EPA OSC	To be identified in the cover letter of the report
Performance Evaluation Samples	Electronic Report	Non-CLP /RST 3-Procured Laboratories	30 days	Letter or Written Report	Non-CLP /RST 3-Procured Laboratories	14 days
Peer Review	Deliverables	SPM, Weston Solutions, Inc.	Prior to deliverable due date	Comments directly on deliverable	SPM, Weston Solutions, Inc.	Prior to deliverable due date

QAPP Worksheet #33: QA Management Reports Table

Type of Report	Frequency (daily, weekly, monthly, quarterly, annually, etc.)	Projected Delivery Date(s)	Person(s) Responsible for Report Preparation (Title and Organizational Affiliation)	Report Recipient(s) (Title and Organizational Affiliation)
Non-CLP/RST 3-procured laboratories data (preliminary)	As performed	5 days for sampling data	Non-CLP/RST 3-procured laboratories; RST 3 Data Validators	Joel Petty, EPA OSC, Region 2 and Site Project Manager, Weston Solutions, Inc.
Non-CLP/RST 3-procured laboratories data (unvalidated)	As performed	Up to 21 days after receipt of unvalidated data	Non-CLP and RST 3-procured laboratories; RST 3 Data Validators	Joel Petty, EPA OSC, Region 2 and Site Project Manager, Weston Solutions, Inc.
Laboratory Technical Systems/ Performance Audits	As performed	Unknown	EPA or other Regulatory Agency	Non-CLP/RST 3-procured laboratories
Performance Evaluation Samples	As performed	Unknown	EPA or other Regulatory Agency	Non-CLP/RST 3-procured Laboratories
On-Site Field Inspection	As performed	7 calendar days after completion of the inspection	Site Project Manager, Weston Solutions, Inc.	Site Project Manager, Weston Solutions, Inc.
Field Change Request	As required per field change	Three days after identification of need for field change	Site Project Manager, Weston Solutions, Inc.	EPA OSC
Final Report	As performed	One week after receipt of EPA approval of data package	Site Project Manager, Weston Solutions, Inc.	EPA OSC

QAPP Worksheet #34: Verification (Step I) Process Table

Verification Input	Description	Internal/ External	Responsible for Verification (Name, Organization)
Site/field logbooks	Field notes will be prepared daily by the RST 3 Site Project Manager and will be complete, appropriate, legible and pertinent. Upon completion of field work, logbooks will be placed in the project files.	I	Site Project Manager, Weston Solutions, Inc.
Chains of custody	COC forms will be reviewed against the samples packed in the specific cooler prior to shipment. The reviewer will initial the form. An original COC will be sent with the samples to the laboratory, while copies are retained for (1) the Sampling Trip Report and (2) the project files.	I	Site Project Manager, Weston Solutions, Inc.
Sampling Trip Reports	STRs will be prepared for each week of field sampling [for which samples are sent to an EPA CLP RAS laboratory.] Information in the STR will be reviewed against the COC forms, and potential discrepancies will be discussed with field personnel to verify locations, dates, etc.	I	Site Project Manager, Weston Solutions, Inc.
Laboratory Preliminary Data	Preliminary data – limited review for either contract compliance or technical compliance.	E	Non-CLP/RST 3-Procured Laboratory
Laboratory analytical data package	Data packages will be reviewed/verified internally by the laboratory performing the work for completeness and technical accuracy prior to submittal.	E	Non-CLP/RST 3-Procured Laboratory
Laboratory analytical data package	Data packages will be reviewed as to content and sample information upon receipt by EPA.	I/E	RST 3 Data Validation Personnel
Final Sample Report	The project data results will be compiled in a sample report for the project. Entries will be reviewed/verified against hardcopy information.	I	Site Project Manager, Weston Solutions, Inc.

QAPP Worksheet #35: Validation (Steps IIa and IIb) Process Table

Step IIa/IIb	Validation Input	Description	Responsible for Validation (Name, Organization)
IIa	SOPs	Ensure that the sampling methods/procedures outlined in QAPP were followed, and that any deviations were noted/approved.	Site Project Manager, Weston Solutions, Inc.
IIb	SOPs	Determine potential impacts from noted/approved deviations, in regard to PQOs.	Site Project Manager, Weston Solutions, Inc.
IIa	Chains of custody	Examine COC forms against QAPP and laboratory contract requirements (e.g., analytical methods, sample identification, etc.).	RST 3 Data Validation Personnel and Site Project Manager, Weston Solutions, Inc.
IIa	Laboratory data package	Examine packages against QAPP and laboratory contract requirements, and against COC forms (e.g., holding times, sample handling, analytical methods, sample identification, data qualifiers, QC samples, etc.).	RST 3 Data Validation Personnel and Site Project Manager, Weston Solutions, Inc.
IIb	Laboratory data package	Determine potential impacts from noted/approved deviations, in regard to PQOs. Examples include PQLs and QC sample limits (precision/accuracy).	RST 3 Data Validation Personnel and Site Project Manager, Weston Solutions, Inc.
IIb	Field duplicates	Compare results of field duplicate (or replicate) analyses with RPD criteria	RST 3 Data Validation Personnel and Site Project Manager, Weston Solutions, Inc.

QAPP Worksheet #36: Validation (Steps IIa and IIb) Summary Table

Step IIa/IIb	Matrix	Analytical Group	Concentration Level	Validation Criteria[1]	Data Validator (title and organizational affiliation)
IIa / IIb	Liquid/Solid and Sludge Waste	RCRA Characteristics	Medium/ High	Analytical Methods for RCRA Characteristics	RST 3 Data Validation Personnel, Weston Solutions, Inc.
IIa / IIb		TCL / TCLP VOCs		Data Validation SOP for Organic Analysis of Medium/High Concentration VOCs under SW 846 Method 8260B; SOP# HW-24.	
IIa / IIb		TCL / TCLP SVOCs		Data Validation SOP for Organic Analysis of Medium/High Concern. SVOCs under SW 846 Method 8270D; SOP# HW-22.	
IIa / IIb		TCL / TCLP Pesticides		Data Validation SOP for Organic Analysis of Medium/High Concentration Pesticides under SW 846 Method 8081B; SOP# HW-44	
IIa / IIb		TCL / TCLP PCBs		Data Validation SOP for Organic Analysis of Medium/High Concentration PCBs under SW 846 Method 8082A; SOP # 45	
IIa / IIb		TCLP Herbicides		Data Validation SOP for Organic Analysis of Medium/High Concentration PCBs under SW 846 Method 8151A; SOP # 45	
IIa / IIb		TAL Metals including Hg; and TCLP Metals		Data Validation SOP for Inorganic analysis at low/medium concentrations. ICP-AES, mercury, under SOW ISM02.3 & SW-846 Methods 6010C & 7470A; SOP # 3a & 3b	

Note: All samples will be submitted for screening data. MS/MSD and field duplicate samples will not be collected.

QAPP Worksheet #37: Usability Assessment

Summarize the usability assessment process and all procedures, including interim steps and any statistics, equations, and computer algorithms that will be used: Data, whether generated in the field or by the laboratory, are tabulated and reviewed for Precision, Accuracy, Representativeness, Completeness, and Comparability (PARCCS) by the SPM for field data or the data validator for laboratory data. The review of the PARCC Data Quality Indicators (DQI) will compare with the DQO detailed in the site-specific QAPP, the analytical methods used and impact of any qualitative and quantitative trends will be examined to determine if bias exists. A hard copy of field data is maintained in a designated field or site logbook. Laboratory data packages are validated, and final data reports are generated. All documents and logbooks are assigned unique and specific control numbers to allow tracking and management.

Where applicable, the following documents will be followed to evaluate data for fitness in decision making: EPA QA/G-4, *Guidance on Systematic Planning using the Data Quality Objectives Process,* EPA/240/B-06/001, February 2006, and EPA QA/G-9R, *Guidance for Data Quality Assessment*, A reviewer's Guide EPA/240/B-06/002, February 2006.

Describe the evaluative procedures used to assess overall measurement error associated with the project:
As delineated in the ***Uniform Federal Policy for Implementing Environmental Quality Systems: Evaluating, Assessing and Documenting Environmental Data Collection and Use Programs Part 1: UFP-QAPP (EPA-505-B-04-900A, March 2005); Part 2A: UFP-QAPP Workbook (EPA-505-B-04-900C, March 2005); Part 2B: Quality Assurance/Quality Control Compendium: Non-Time Critical QA/QC Activities (EPA-505-B-04-900B, March 2005);*** "Graded Approach" will be implemented for data collection activities that are either exploratory or where specific decisions cannot be identified, since this guidance indicates that the formal DQO process is not necessary.

QAPP Worksheet #37: Usability Assessment- (Concluded)

Containers will be selected for sampling by the EPA OSC based on HazCat field screening results and Site observations. The analytical data generated from the Removal Assessment will be used by the EPA to determine if a Removal Action is warranted at the Site.

Identify the personnel responsible for performing the usability assessment: Site Project Management Team, Data Validation Personnel, and EPA Region 2 OSC

Describe the documentation that will be generated during usability assessment and how usability assessment results will be presented so that they identify trends, relationships (correlations), and anomalies:

A copy of the most current approved QAPP, including any graphs, maps and text reports developed will be provided to all personnel identified on the distribution list.

ATTACHMENT A

Figure 1: Site Location Map

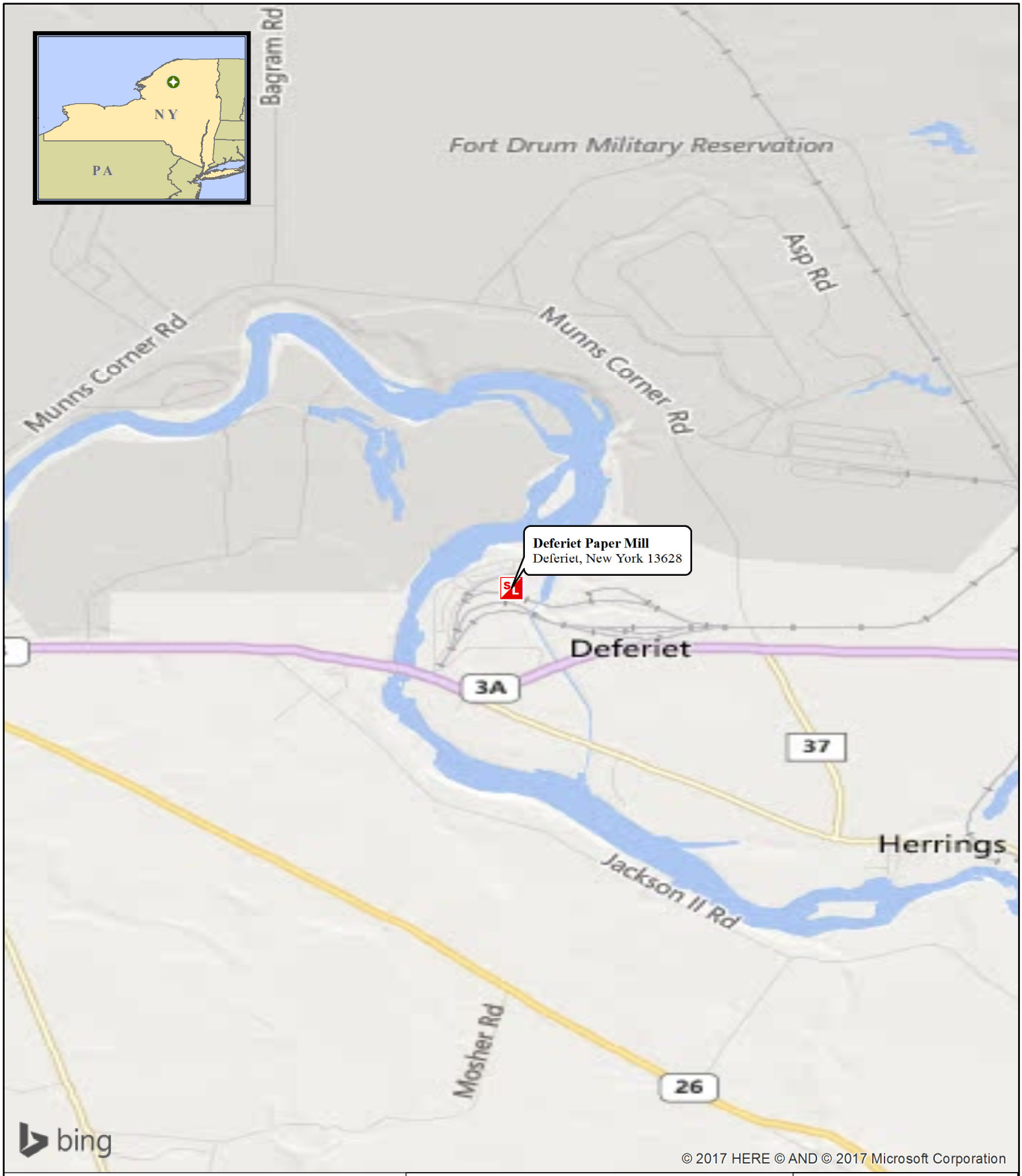

Legend

Site Location

N

0 0.175 0.35 0.7 1.05 1.4 Miles

Weston Solutions, Inc.
East Division

In Association With
Scientific and Environmental Associates, Inc.,
Environmental Compliance Consultants, Inc.,
Avatar Environmental, LLC, On-Site Environmental,
Inc.and Sovereign Consulting, Inc

Figure 1:
Site Location Map

Deferiet Paper Mill Site
Deferiet, New York

U.S. ENVIRONMENTAL PROTECTION AGENCY
REMOVAL SUPPORT TEAM 3
CONTRACT # EP-S2-14-01

DATE MODIFIED: 5/31/2017

GIS ANALYST:	M. Beuthe
EPA OSC:	K. Glenn
RST SPM:	M. Beuthe
FILENAME:	20170531_SITELOCATIONMAP.MXD

\\FSED2DATA1\GISDATA\RST_3\00070198\MXD\20170531_SITELOCATIONMAP.MXD

ATTACHMENT B

Sampling SOPs

EPA ERT SOP # 2001: General Field Sampling Guidelines
EPA ERT SOP # 2009: Drum Sampling Guidelines
EPA ERT SOP # 2010: Tank Sampling

GENERAL FIELD SAMPLING GUIDELINES

CONTENTS

1.0 SCOPE AND APPLICATION

2.0 METHOD SUMMARY*

3.0 SAMPLE PRESERVATION, CONTAINERS, HANDLING, AND STORAGE

4.0 INTERFERENCES AND POTENTIAL PROBLEMS

5.0 EQUIPMENT/APPARATUS

6.0 REAGENTS

7.0 PROCEDURE

- 7.1 Types of Samples*
- 7.2 Sample Collection Techniques
- 7.3 Types of Sampling Strategies
- 7.4 QA Work Plans (QAWP)
- 7.5 Legal Implications

8.0 CALCULATIONS

9.0 QUALITY ASSURANCE/QUALITY CONTROL

10.0 DATA VALIDATION

11.0 HEALTH AND SAFETY

*These sections affected by Revision 0.0.

SUPERCEDES: SOP #2001; Revision 2.0; 12/19/91; U.S. EPA Contract EP-W-09-031.

1.0 SCOPE AND APPLICATION

The purpose of this Standard Operating Procedure (SOP) is to provide general field sampling guidelines that will assist SERAS personnel in choosing sampling strategies, location, and frequency for proper assessment of site characteristics. This SOP is applicable to all field activities that involve sampling.

These are standard (i.e., typically applicable) operating procedures which may be varied or changed as required, dependent on site conditions, equipment limitations or limitations imposed by the procedure. In all instances, the ultimate procedures employed should be documented and associated with the final report.

Mention of trade names or commercial products does not constitute U.S. EPA endorsement or recommendation for use.

2.0 METHOD SUMMARY

Sampling is the selection of a representative portion of a larger population, universe, or body. Through examination of a sample, the characteristics of the larger body from which the sample was drawn can be inferred. In this manner, sampling can be a valuable tool for determining the presence, type, and extent of contamination by hazardous substances in the environment.

The primary objective of all sampling activities is to characterize a hazardous waste site accurately so that its impact on human health and the environment can be properly evaluated. It is only through sampling and analysis that site hazards can be measured and the job of cleanup and restoration can be accomplished effectively with minimal risk. The sampling itself must be conducted so that every sample collected retains its original physical form and chemical composition. In this way, sample integrity is insured, quality assurance standards are maintained, and the sample can accurately represent the larger body of material under investigation.

The extent to which valid inferences can be drawn from a sample depends on the degree to which the sampling effort conforms to the project's objectives. For example, as few as one sample may produce adequate, technically valid data to address the project's objectives. Meeting the project's objectives requires thorough planning of sampling activities, and implementation of the most appropriate sampling and analytical procedures. These issues will be discussed in this procedure.

3.0 SAMPLE PRESERVATION, CONTAINERS, HANDLING, AND STORAGE

The amount of sample to be collected, and the proper sample container type (i.e., glass, plastic), chemical preservation, and storage requirements are dependent on the matrix being sampled and the parameter(s) of interest, and are discussed in ERT/SERAS SOP #2003, Sample Storage, Preservation, and Handling, for the soil and water matrices. Sample preservation, containers, handling, and storage for air and waste samples are discussed in the specific SOPs for air and waste sampling techniques.

4.0 INTERFERENCES AND POTENTIAL PROBLEMS

The nature of the object or materials being sampled may be a potential problem to the sampler. If a material is homogeneous, it will generally have a uniform composition throughout. In this case, any sample increment can be considered representative of the material. On the other hand, heterogeneous

samples present problems to the sampler because of changes in the material over distance, both laterally and vertically.

Samples of hazardous materials may pose a safety threat to both field and laboratory personnel. Proper health and safety precautions should be implemented when handling this type of sample.

Environmental conditions, weather conditions, or non-target chemicals may cause problems and/or interferences when performing sampling activities or when sampling for a specific parameter. Refer to the specific SOPs for sampling techniques.

5.0 EQUIPMENT/APPARATUS

The equipment/apparatus required to collect samples must be determined on a site specific basis. Due to the wide variety of sampling equipment available, refer to the specific SOPs for sampling techniques which include lists of the equipment/apparatus required for sampling.

6.0 REAGENTS

Reagents may be utilized for preservation of samples and for decontamination of sampling equipment. The preservatives required are specified by the analysis to be performed and are summarized in ERT/SERAS SOP #2003, Sample Storage, Preservation, and Handling. Decontamination solutions are specified in ERT/SERAS SOP #2006, Sampling Equipment Decontamination.

7.0 PROCEDURE

7.1 Types of Samples

In relation to the media to be sampled, two basic types of samples can be considered: the environmental sample and the hazardous sample.

Environmental samples are those collected from streams, ponds, lakes, wells, and are off-site samples that are not expected to be contaminated with hazardous materials. They usually do not require the special handling procedures typically used for concentrated wastes. However, in certain instances, environmental samples can contain elevated concentrations of pollutants and in such cases would have to be handled as hazardous samples.

Hazardous or concentrated samples are those collected from drums, tanks, lagoons, pits, waste piles, fresh spills, or areas previously identified as contaminated, and require special handling procedures because of their potential toxicity or hazard. These samples can be further subdivided based on their degree of hazard; however, care should be taken when handling and shipping any wastes believed to be concentrated regardless of the degree.

The importance of making the distinction between environmental and hazardous samples is two-fold:

(1) Personnel safety requirements: Any sample thought to contain enough hazardous materials to pose a safety threat should be designated as hazardous and handled in a manner which ensures the safety of both field and laboratory personnel.

(2) Transportation requirements: Hazardous samples must be packaged, labeled, and shipped according to the International Air Transport Association (IATA) Dangerous Goods Regulations or Department of Transportation (DOT) regulations and U.S. EPA guidelines.

7.2 Sample Collection Techniques

In general, two basic types of sample collection techniques are recognized, both of which can be used for either environmental or hazardous samples.

Grab Samples

A grab sample is defined as a discrete aliquot representative of a specific location at a given point in time. The sample is collected all at once at one particular point in the sample medium. The representativeness of such samples is defined by the nature of the materials being sampled. In general, as sources vary over time and distance, the representativeness of grab samples will decrease.

Composite Samples

Composites are nondiscrete samples composed of more than one specific aliquot collected at various sampling locations and/or different points in time. Analysis of this type of sample produces an average value and can in certain instances be used as an alternative to analyzing a number of individual grab samples and calculating an average value. It should be noted, however, that compositing can mask problems by diluting isolated concentrations of some hazardous compounds below detection limits.

Compositing is often used for environmental samples and may be used for hazardous samples under certain conditions. For example, compositing of hazardous waste is often performed after compatibility tests have been completed to determine an average value over a number of different locations (group of drums). This procedure generates data that can be useful by providing an average concentration within a number of units, can serve to keep analytical costs down, and can provide information useful to transporters and waste disposal operations.

For sampling situations involving hazardous wastes, grab sampling techniques are generally preferred because grab sampling minimizes the amount of time sampling personnel must be in contact with the wastes, reduces risks associated with compositing unknowns, and eliminates chemical changes that might occur due to compositing.

7.3 Types of Sampling Strategies

The number of samples that should be collected and analyzed depends on the objective of the investigation. There are three basic sampling strategies: random, systematic, and judgmental sampling.

Random sampling involves collection of samples in a nonsystematic fashion from the entire site or a specific portion of a site. Systematic sampling involves collection of samples based on a grid or

a pattern which has been previously established. When judgmental sampling is performed, samples are collected only from the portion(s) of the site most likely to be contaminated. Often, a combination of these strategies is the best approach depending on the type of the suspected/known contamination, the uniformity and size of the site, the level/type of information desired, etc.

7.4 QA Work Plans (QAWP)

A QAWP is required when it becomes evident that a field investigation is necessary. It should be initiated in conjunction with, or immediately following, notification of the field investigation. This plan should be clear and concise and should detail the following basic components, with regard to sampling activities:

- Objective and purpose of the investigation.
- Basis upon which data will be evaluated.
- Information known about the site including location, type and size of the facility, and length of operations/abandonment.
- Type and volume of contaminated material, contaminants of concern (including concentration), and basis of the information/data.
- Technical approach including media/matrix to be sampled, sampling equipment to be used, sample equipment decontamination (if necessary), sampling design and rationale, and SOPs or description of the procedure to be implemented.
- Project management and reporting, schedule, project organization and responsibilities, manpower and cost projections, and required deliverables.
- QA objectives and protocols including tables summarizing field sampling and QA/QC analysis and objectives.

Note that this list of QAWP components is not all-inclusive and that additional elements may be added or altered depending on the specific requirements of the field investigation. It should also be recognized that although a detailed QAWP is quite important, it may be impractical in some instances. Emergency responses and accidental spills are prime examples of such instances where time might prohibit the development of site-specific QAWPs prior to field activities. In such cases, investigators would have to rely on general guidelines and personal judgment, and the sampling or response plans might simply be a strategy based on preliminary information and finalized on site. In any event, a plan of action should be developed, no matter how concise or informal, to aid investigators in maintaining a logical and consistent order to the implementation of their task.

7.5 Legal Implications

The data derived from sampling activities are often introduced as critical evidence during litigation of a hazardous waste site cleanup. Legal issues in which sampling data are important may include cleanup cost recovery, identification of pollution sources and responsible parties, and technical validation of remedial design methodologies. Because of the potential for involvement in legal actions, strict adherence to technical and administrative SOPs is essential during both the development and implementation of sampling activities.

Technically valid sampling begins with thorough planning and continues through the sample collection and analytical procedures. Administrative requirements involve thorough, accurate

documentation of all sampling activities. Documentation requirements include maintenance of a chain of custody, as well as accurate records of field activities and analytical instructions. Failure to observe these procedures fully and consistently may result in data that are questionable, invalid and non-defensible in court, and the consequent loss of enforcement proceedings.

8.0 CALCULATIONS

Refer to the specific SOPs for any calculations which are associated with sampling techniques.

9.0 QUALITY ASSURANCE/QUALITY CONTROL

Refer to the specific SOPs for the type and frequency of QA/QC samples to be analyzed, the acceptance criteria for the QA/QC samples, and any other QA/QC activities which are associated with sampling techniques.

10.0 DATA VALIDATION

Refer to the specific SOPs for data validation activities that are associated with sampling techniques.

11.0 HEALTH AND SAFETY

When working with potentially hazardous materials, follow U.S. EPA, OSHA, and corporate health and safety procedures.

DRUM SAMPLING

CONTENTS

1.0 SCOPE AND APPLICATION

2.0 METHOD SUMMARY

3.0 SAMPLE PRESERVATION, CONTAINERS, HANDLING, AND STORAGE

4.0 INTERFERENCES AND POTENTIAL PROBLEMS

5.0 EQUIPMENT/APPARATUS

6.0 REAGENTS

7.0 PROCEDURES

- 7.1 Preparation
- 7.2 Drum Excavation
- 7.3 Drum Inspection
- 7.4 Drum Staging
- 7.5 Drum Opening
  - 7.5.1 Manual Drum Opening with a Bung Wrench
  - 7.5.2 Manual Drum Opening with a Drum Deheader
  - 7.5.3 Manual Drum Opening with a Hand Pick, Pickaxe, or Spike
  - 7.5.4 Remote Drum Opening with a Backhoe Spike
  - 7.5.5 Remote Drum Opening with Hydraulic Devices
  - 7.5.6 Remote Drum Opening with Pneumatic Devices
- 7.6 Drum Sampling
  - 7.6.1 Glass Thief Sampler
  - 7.6.2 COLIWASA Sampler
  - 7.6.3 Coring Device
- 7.7 Hazard Categorization

8.0 CALCULATIONS

9.0 QUALITY ASSURANCE/QUALITY CONTROL

10.0 DATA VALIDATION

11.0 HEALTH AND SAFETY

CONTENTS (cont)

12.0 REFERENCES

13.0 APPENDICES

A - Attachments
B - Figures

SUPERSEDES: SOP #2009; Revision 1.0; 03/12/92; U.S. EPA Contract EP-W-09-031.

DRUM SAMPLING

1.0 SCOPE AND APPLICATION

The purpose of this standard operating procedure (SOP) is to provide technical guidance on implementing safe and cost-effective response actions at hazardous waste sites containing drums with unknown contents. Container contents are sampled and characterized for disposal, bulking, recycling, segregation, and classification purposes.

These are standard (i.e., typically applicable) operating procedures which may be varied or changed as required, dependent on site conditions, equipment limitations or limitations imposed by the procedure. In all instances, the ultimate procedures employed should be documented and associated with the final report.

Mention of trade names or commercial products does not constitute U.S. Environmental Protection Agency (U.S. EPA) endorsement or recommendation for use.

2.0 METHOD SUMMARY

Prior to sampling, drums must be excavated, (if necessary), inspected, staged, and opened. Drum excavation must be performed by qualified personnel. Inspection involves the observation and recording of visual qualities of each drum and any characteristics pertinent to the classification of the drum's contents. Staging involves the physical grouping of drums according to classifications established during the physical inspection. Opening of closed drums can be performed manually or remotely. Remote drum opening is recommended for worker safety. The most widely used method of sampling a drum involves the use of a glass thief. This method is quick, simple, relatively inexpensive, and requires no decontamination. The contents of a drum can be further characterized by performing various field tests.

3.0 SAMPLE PRESERVATION, CONTAINERS, HANDLING, AND STORAGE

Samples collected from drums are considered waste samples and as such, adding preservatives is not required due to the potential reaction of the sample with the preservative. Samples should, however, be cooled to 4°C and protected from sunlight in order to minimize any potential reaction due to the light sensitivity of the sample.

Sample bottles for collection of waste liquids, sludges, or solids are typically wide mouth amber jars with Teflon-lined screw caps. Actual volume required for analysis should be determined in conjunction with the laboratory performing the analysis.

Waste sample handling procedures should be as follows:

1. Label the sample container with the appropriate sample label and complete the appropriate field data sheet(s). Place sample container into two resealable plastic bags.

2. Place each bagged sample container into a shipping container which has been lined with plastic. Pack the container with enough non-combustible, absorbent, cushioning material to minimize the possibility of

containers breaking, and to absorb any material which may leak.

Note: Depending on the nature and quantity of the material to be shipped, different packaging may be required. The transportation company or a shipping/receiving expert should be consulted prior to packing the samples.

3. Complete a chain of custody record for each shipping container, place into a resealable plastic bag, and affix to the inside lid of the shipping container.

4. Secure and custody seal the lid of the shipping container. Label the shipping container appropriately and arrange for the appropriate transportation mode consistent with the type of hazardous waste involved.

4.0 INTERFERENCES AND POTENTIAL PROBLEMS

If buried drums are suspected, geophysical investigation techniques such as magnetometry or ground penetrating radar may be employed in an attempt to determine the location and depth of drums. During excavation, the soil must be removed with great caution to minimize the potential for drum rupture.

Until the contents are characterized, sampling personnel should assume that unlabelled drums contain hazardous materials. Labeled drums are frequently mislabeled, especially drums that are reused. Because a drum's label may not accurately describe its contents, extreme caution must be exercised when working with or around drums.

If a drum which contains a liquid cannot be moved without rupture, its contents may be immediately transferred to a sound drum using an appropriate method of transfer based on the type of waste. In any case, preparations should be made to contain the spill (i.e., spill pads, dike, etc.) should one occur.

If a drum is leaking, open, or deteriorated, then it must be placed immediately in overpack containers.

The practice of tapping drums to determine their contents is neither safe nor effective and should not be used if the drums are visually overpressurized or if shock-sensitive materials are suspected. A laser thermometer may be effective in order to determine the level of the drum contents via surface temperature differences.

Drums that have been overpressurized to the extent that the head is swollen several inches above the level of the chime should not be moved. A number of devices have been developed for venting critically swollen drums. One method that has proven to be effective is a tube and spear device. A light aluminum tube (3 meters long) is positioned at the vapor space of the drum. A rigid, hooking device attached to the tube, goes over the chime and holds the tube securely in place. The spear is inserted in the tube and positioned against the drum wall. A sharp blow on the end of the spear drives the sharpened tip through the drum and the gas vents along the grooves. Venting should be done from behind a wall or barricade. Once the pressure has been relieved, the bung can be removed and the drum sampled.

Because there is potential for accidents to occur during handling, particularly initial handling, drums should only be handled if necessary. All personnel should be warned of the hazards prior to handling drums. Overpack drums and an adequate volume of absorbent material should be kept near areas where minor spills may occur. Where major spills may occur, a containment berm adequate to contain the entire volume of liquid in the drums should be constructed before any handling takes place. If drum contents spill,

personnel trained in spill response should be used to isolate and contain the spill.

5.0 EQUIPMENT/APPARATUS

The following are standard materials and equipment required for sampling:

- Personal protection equipment
- Wide-mouth amber glass jars with Teflon® cap liner, approximately 500 mL volume
- Other appropriate sample jars
- Uniquely numbered sample identification labels with corresponding data sheets
- Drum/Tank Sampling Data Sheets and Field Test Data Sheets for Drum/Tank Sampling
- Chain of Custody records
- Decontamination materials
- Glass thieving tubes or COLIWASA
- Coring device
- Stainless steel spatula or spoons
- Laser thermometer
- Drum overpacks
- Absorbent material for spills
- Drum opening devices

Bung Wrench

A common method for opening drums manually is using a universal bung wrench. These wrenches have fittings made to remove nearly all commonly encountered bungs. They are usually constructed of a non-sparking metal alloy (i.e., brass, bronze/manganese, aluminum, etc.) formulated to reduce the likelihood of sparks. The use of a "NON-SPARKING" wrench does not completely eliminate the possibility of a spark being produced.

Drum Deheader

One means by which a drum can be opened manually when a bung is not removable with a bung wrench is by using a drum deheader. This tool is constructed of forged steel with an alloy steel blade and is designed to cut the lid of a drum off or part way off by means of a scissors-like cutting action. A limitation of this device is that it can be attached only to closed head drums. Drums with removable heads must be opened by other means.

Hand Pick, Pickaxe, and Hand Spike

These tools are usually constructed of brass or a non-sparking alloy with a sharpened point that can penetrate the drum lid or head when the tool is swung. The hand picks or pickaxes that are most commonly used are commercially available; whereas, the spikes are generally uniquely fabricated four foot long poles with a pointed end.

Backhoe Spike

Another means used to open drums remotely for sampling is a metal spike attached or welded to a backhoe bucket. This method is very efficient and is often used in large-scale operations.

Hydraulic Drum Opener

Recently, remotely operated hydraulic devices have been fabricated to open drums. This device uses hydraulic pressure to force a non-sparking spike through the wall of a drum. It consists of a manually operated pump which pressurizes fluid through a length of hydraulic line.

Pneumatic Devices

A pneumatic bung remover consists of a compressed air supply that is controlled by a two-stage regulator. A high pressure air line of desired length delivers compressed air to a pneumatic drill, which is adapted to turn bung fitting selected to fit the bung to be removed. An adjustable bracketing system has been designed to position and align the pneumatic drill over the bung. This bracketing system must be attached to the drum before the drill can be operated. Once the bung has been loosened, the bracketing system must be removed before the drum can be sampled. This remote bung opener does not permit the slow venting of the container, and therefore appropriate precautions must be taken. It also requires the container to be upright and relatively level. Bungs that are rusted shut cannot be removed with this device.

6.0 REAGENTS

Reagents are not typically required for preserving drum samples. However, reagents will be utilized for decontamination of sampling equipment. Decontamination solutions are specified in ERT/REAC SOP #2006, Sampling Equipment Decontamination.

7.0 PROCEDURES

7.1 Preparation

1. Determine the extent of the sampling effort, the sampling methods to be employed, and the types and amounts of equipment and supplies needed.

2. Obtain necessary sampling and monitoring equipment.

3. Decontaminate or preclean equipment, and ensure that it is in working order.

4. Prepare scheduling and coordinate with staff, clients, and regulatory agency, if appropriate.

5. Perform a general site survey prior to site entry in accordance with the site specific Health and Safety Plan.
6. Use stakes, flagging, or buoys to identify and mark all sampling locations. If required the proposed locations may be adjusted based on site access, property boundaries, and surface obstructions.

7.2 Drum Excavation

If it is presumed that buried drums are on-site and prior to beginning excavation activities, geophysical investigation techniques should be utilized to approximate the location and depth of the drums. In addition, it is important to ensure that all locations where excavation will occur are clear of utility lines, pipes and poles (subsurface as well as above surface).

Excavating, removing, and handling drums are generally accomplished with conventional heavy construction equipment. These activities should be performed by an equipment operator who has experience in drum excavation. During excavation activities, drums must be approached in a manner that will avoid digging directly into them.

The soil around the drum should be excavated with non-sparking hand tools or other appropriate means and as the drums are exposed, a visual inspection should be made to determine the condition of the drums. Ambient air monitoring should be done to determine the presence of unsafe levels of volatile organics, explosives, or radioactive materials. Based on this preliminary visual inspection, the appropriate mode of drum excavation and handling may be determined.

Drum identification and inventory should begin before excavation. Information such as location, date of removal, drum identification number, overpack status, and any other identification marks should be recorded on the Drum/Tank Sampling Data Sheet (Attachment 1, Appendix A).

7.3 Drum Inspection

Appropriate procedures for handling drums depend on the contents. Thus, prior to any handling, drums should be visually inspected to gain as much information as possible about their contents. The drums should be inspected for the following:

1. Drum condition, corrosion, rust, punctures, bungs, and leaking contents.

2. Symbols, words, or other markings on the drum indicating hazards (i.e., explosive, radioactive, toxic, flammable), or further identifying the drums.
3. Signs that the drum is under pressure.

4. Shock sensitivity.

Monitoring should be conducted around the drums using instruments such as radiation meters, organic vapor analyzers (OVA) and combustible gas indicators (CGI).

Survey results can be used to classify the drums into categories, for instance:

- Radioactive
- Leaking/deteriorating
- Bulging
- Lab packs
- Explosive/shock sensitive
- Empty

All personnel should assume that unmarked drums contain hazardous materials until their contents have been categorized. Once a drum has been visually inspected and any immediate hazard has been eliminated by overpacking or transferring the drum's contents, the drum is affixed with a numbered tag and transferred to a staging area. Color-coded tags, labels or bands should be used to identify the drum's category based on visual inspection. A description of each drum, its condition, any unusual markings, the location where it was buried or stored, and field monitoring information are recorded on a Drum/Tank Sampling Data Sheet (Attachment 1, Appendix A). This data sheet becomes the principal record keeping tool for tracking the drum on-site.

7.4 Drum Staging

Prior to sampling, the drums should be staged to allow easy access. Ideally, the staging area should be located just far enough from the drum opening area to prevent a chain reaction if one drum should explode or catch fire when opened.

During staging, the drums should be physically separated into the following categories: those containing liquids, those containing solids, those containing lab packs, and those which are empty. This is done because the strategy for sampling and handling drums/containers in each of these categories will be different. This may be achieved by visual inspection of the drum and its labels, codes, etc. Solids and sludges are typically disposed of in open top drums. Closed head drums with a bung opening generally contain liquid.

Where there is good reason to suspect that drums contain radioactive, explosive, or shock-sensitive materials, these drums should be staged in a separate, isolated area. Placement of explosives and shock-sensitive materials in diked and fenced areas will minimize the hazard and the adverse effects of any premature detonation of explosives.

Where space allows, the drum opening area should be physically separated from the drum removal and drum staging operations. Drums are moved from the staging area to the drum opening area one at a time using forklift trucks equipped with drum grabbers or a barrel grappler. In a large-scale drum handling operation, drums may be conveyed to the drum opening area using a roller conveyor. Drums may be restaged as necessary after opening and sampling.

7.5 Drum Opening

There are three basic techniques available for opening drums at hazardous waste sites:

- Manual opening with non-sparking bung wrenches
- Drum deheading
- Remote drum puncturing or bung removal

The choice of drum opening techniques and accessories depends on the number of drums to be opened, their waste contents, and physical condition. Remote drum opening equipment should always be considered in order to protect worker safety. Under OSHA 1910.120, manual drum opening with bung wrenches or deheaders should be performed ONLY with structurally sound drums and waste contents that are known to be non-shock sensitive, non-reactive, non-explosive, and non-flammable.

7.5.1 Manual Drum Opening with a Bung Wrench

Manual drum opening with bung wrenches (Figure 1, Appendix B) should not be performed unless the drums are structurally sound (no evidence of bulging or deformation) and their contents are known to be non-shock sensitive, non-reactive, non-explosive or non-flammable. If opening the drum with bung wrenches is deemed safe, then certain procedures should be implemented to minimize the hazard:

- Field personnel should be fully outfitted with protective gear.
- Drums should be positioned upright with the bung up, or, for drums with bungs on the side, laid on their sides with the bung plugs up.
- The wrenching motion should be a slow, steady pull across the drum. If the length of the bung wrench handle provides inadequate leverage for unscrewing the plug, a "cheater bar" can be attached to the handle to improve leverage.

7.5.2 Manual Drum Opening with a Drum Deheader

Drums are opened with a drum deheader (Figure 2, Appendix B) by first positioning the cutting edge just inside the top chime and then tightening the adjustment screw so that the deheader is held against the side of the drum. Moving the handle of the deheader up and down while sliding the deheader along the chime will enable the entire top to be rapidly cut off if so desired. If the top chime of a drum has been damaged or badly dented it may not be possible to cut the entire top off. Since there is always the possibility that a drum may be under pressure, the initial cut should be made very slowly to allow for the gradual release of any built-up pressure. A safer technique would be to employ a remote method prior to using the deheader.

Self-propelled drum openers which are either electrically or pneumatically driven are available and can be used for quicker and more efficient deheading.
The drum deheader should be decontaminated, as necessary, after each drum is opened to avoid cross contamination and/or adverse chemical reactions from incompatible materials.

7.5.3 Manual Drum Opening with a Hand Pick, Pickaxe, or Spike

When a drum must be opened and neither a bung wrench nor a drum deheader is suitable, then it can be opened for sampling by using a hand pick, pickaxe, or spike (Figure 3, Appendix B). Often the drum lid or head must be hit with a great deal of force in order to penetrate it. Because of this, the potential for splash or spraying is greater than with other opening methods and therefore, this method of drum opening is not recommended, particularly when opening drums containing liquids. Some spikes used have been modified by the addition of a circular splash plate near the penetrating end. This plate acts as a shield and reduces the amount of splash in the direction of the person using the spike. Even with this shield, good splash gear is essential.

Since drums, some of which may be under pressure, cannot be opened slowly with these tools, spray from drums is common and appropriate safety measures must be taken. The pick or spike should be decontaminated after each drum is opened to avoid cross contamination and/or adverse chemical reaction from incompatible materials.

7.5.4 Remote Drum Opening with a Backhoe Spike

Remotely operated drum opening tools are the safest available means of drum opening. Remote drum opening is slow, but provides a high degree of safety compared to manual methods of opening.

In the opening area, drums should be placed in rows with adequate aisle space to allow ease in backhoe maneuvering. Once staged, the drums can be quickly opened by punching a hole in the drum head or lid with the spike.

The spike (Figure 4, Appendix B) should be decontaminated after each drum is opened to prevent cross contamination and/or adverse reaction from incompatible material. Even though some splash or spray may occur when this method is used, the operator of the backhoe can be protected by mounting a large shatter-resistant shield in front of the operator's cage. This combined with the normal personal protection gear should be sufficient to protect the operator. Additional respiratory protection can be afforded by providing the operator with an on-board airline system.

7.5.5 Remote Drum Opening with Hydraulic Devices

A piercing device with a non-sparking, metal point is attached to the end of a hydraulic line and is pushed into the drum by the hydraulic pressure (Figure 5, Appendix B). The piercing device can be attached so that a hole for sampling can be made in either the side or the head of the drum. Some of the metal piercers are hollow or tube-like so that they can be left in place if desired and serve as a permanent tap or sampling port. The piercer is designed to establish a tight seal after penetrating the container.

7.5.6 Remote Drum Opening with Pneumatic Devices

Pneumatically-operated devices utilizing compressed air have been designed to remove drum bungs remotely (Figure 6, Appendix B). Prior to opening the drum, a bung fitting must be selected to fit the bung to be removed. The adjustable bracketing system is then attached to the drum and the pneumatic drill is aligned over the bung. This must be done before the drill can be operated. The operator then moves away from the drum to operate the equipment. Once the bung has been loosened, the bracketing system must be removed before the drum can be sampled. This remote bung opener does not permit the slow venting of the container, and therefore appropriate precautions must be taken. It also requires the container to be upright and relatively level. Bungs that are rusted shut cannot be removed with this device.

7.6 Drum Sampling

After the drum has been opened, preliminary monitoring of headspace gases should be performed first with an explosimeter/oxygen meter. Afterwards, an OVA or other instruments should be used. If possible, these instruments should be intrinsically safe. In most cases it is impossible to observe the contents of these sealed or partially sealed drums. Since some layering or stratification is likely in any solution left undisturbed, a sample that represents the entire depth of the drum must be taken.

When sampling a previously sealed drum, a check should be made for the presence of a bottom sludge. This is easily accomplished by measuring the depth to apparent bottom then comparing it to the known interior depth.

7.6.1 Glass Thief Sampler

The most widely used implement for sampling drum liquids is a glass tube commonly referred to as a glass thief (Figure 7, Appendix B). This tool is cost effective, quick, and disposable. Glass thieves are typically 6mm to 16mm I.D. and 48 inches long.

Procedures for Use:

1. Remove the cover from the sample container.

2. Insert glass tubing almost to the bottom of the drum or until a solid layer is encountered. About one foot of tubing should extend above the drum.

3. Allow the waste in the drum to reach its natural level in the tube.

4. Cap the top of the sampling tube with a tapered stopper or thumb, ensuring liquid does not come into contact with stopper.

5. Carefully remove the capped tube from the drum and insert the uncapped end into the appropriate sample container.

6. Release stopper and allow the glass thief to drain until the container is approximately two-thirds full.

7. Remove tube from the sample container, break it into pieces and place the pieces in the drum.

8. Cap the sample container tightly and label it. Place the sample container into a carrier.

9. Replace the bung or place plastic over the drum.

10. Log all samples in the site logbook and on Drum/Tank Sampling Data Sheets.

11. Perform hazard categorization analyses if included in the project scope.

12. Transport the sample to the decontamination zone and package it for transport to the analytical laboratory, as necessary. Complete chain of custody records.

In many instances a drum containing waste material will have a sludge layer on the bottom. Slow insertion of the sample tube into this layer; then a gradual withdrawal will allow the sludge to act as a bottom plug to maintain the fluid in the tube. The plug can be gently removed and placed into the sample container by the use of a stainless steel lab spoon.

It should be noted that in some instances disposal of the tube by breaking it into the drum may interfere with eventual plans for the removal of its contents. The use of this technique should be cleared with the project officer or other glass thief disposal techniques should be evaluated.

7.6.2 COLIWASA Sampler

The Composite Liquid Waste Sampler (COLIWASA) and modifications thereof are equipment that collect a sample from the full depth of a drum and maintain it in the transfer tube until delivery to the sample bottle. The COLIWASA (Figure 8, Appendix B) is a much cited sampler designed to permit representative sampling of multiphase wastes from drums and other containerized wastes. One configuration consists of a 152 cm by 4 cm I.D. section of tubing with a neoprene stopper at one end attached by a rod running the length of the tube to a locking mechanism at the other end.

Manipulation of the locking mechanism opens and closes the sampler by raising and lowering the neoprene stopper. One model of the COLIWASA is shown in Appendix B; however, the design can be modified and/or adapted somewhat to meet the needs of the sampler.

The major drawbacks associated with using a COLIWASA concern decontamination and costs. The sampler is difficult to decontaminate in the field and its high cost in relation to alternative procedures (glass tubes) make it an impractical throwaway item. It still has applications, however, especially in instances where a true representation of a multiphase waste is absolutely necessary.

Procedures for Use

1. Put the sampler in the open position by placing the stopper rod handle in the T-position and pushing the rod down until the handle sits against the sampler's locking block.

2. Slowly lower the sampler into the liquid waste. Lower the sampler at a rate that permits the levels of the liquid inside and outside the sampler tube to be about the same. If the level of the liquid in the sample tube is lower than that outside the sampler, the sampling rate is too fast and will result in a non-representative sample.

3. When the sampler stopper hits the bottom of the waste container, push the sampler tube downward against the stopper to close the sampler. Lock the sampler in the closed position by turning the T-handle until it is upright and one end rests tightly on the locking block.

4. Slowly withdraw the sample from the waste container with one hand while wiping the sampler tube with a disposable cloth or rag with the other hand.

5. Carefully discharge the sample into the appropriate sample container by slowly pulling the lower end of the T-handle away from the locking block while the lower end of the sampler is positioned in a sample container.

6. Cap the sample container tightly and label it. Place the sample container in a carrier.

7. Replace the bung or place plastic over the drum.

8. Log all samples in the site logbook and on Drum/Tank Sampling Data Sheets.

9. Perform hazard categorization analyses if included in the project scope.

10. Transport the sample to the decontamination zone and package for transport to the analytical laboratory, as necessary. Complete the Chain of Custody records.

7.6.3 Coring Device

A coring device may be used to sample drum solids. Samples should be taken from different areas within the drum. This sampler consists of a series of extensions, a T-handle, and the coring device.

Procedures for use:

1. Assemble the sampling equipment.

2. Remove the cover from the sample container.

3. Insert the sampling device to the bottom of the drum. The extensions and the "T" handle should extend above the drum.

4. Rotate the sampling device to cut a core of material.

5. Slowly withdraw the sampling device so that as much sample material as possible is retained within it.

6. Transfer the sample to the appropriate sample container, and label it. A stainless steel spoon or scoop may be used as necessary.

7. Cap the sample container tightly and place it in a carrier.

8. Replace the bung or place plastic over the drum.

9. Log all samples in the site log book and on Drum/Tank Sampling Data Sheets.

10. Perform hazard categorization analyses if included in the project scope.

11. Transport the sample to the decontamination zone and package it for transport to the analytical laboratory, as necessary. Complete chain of custody records.

7.7 Hazard Categorization

The goal of characterizing or categorizing the contents of drums is to obtain a quick, preliminary assessment of the types and levels of pollutants contained in the drums. These activities generally involve rapid, non-rigorous methods of analysis. The data obtained from these methods can be used to make decisions regarding drum staging or restaging, bulking or compositing of the drum contents.

As a first step in obtaining these data, standard tests should be used to classify the drum contents into general categories such as auto-reactives, water reactives, inorganic acids, organic acids, heavy metals, pesticides, cyanides, inorganic oxidizers, and organic oxidizers. In some cases, further analyses should be conducted to more precisely identify the drum contents.

There are several methods available to perform these tests:

- the HazCat chemical identification system
- the Chlor-N-Oil Test Kit
- Spill-fyter Chemical Classifier Strips
- Setaflash (for ignitability)

These methods must be performed according to the manufacturers' instructions and the results must be documented on the Field Test Data Sheet for Drum/Tank Sampling (Attachment 2, Appendix A).

Other tests which may be performed include:

- Water Reactivity
- Specific Gravity Test (compared to water)
- Water Solubility Test
- pH of Aqueous Solution

The tests must be performed in accordance with the instructions on the Field Test Data Sheet for Drum/Tank Sampling and results of the tests must be documented on these data sheets.

The specific methods that will be used for hazard categorization must be documented in the Quality Assurance Work Plan.

8.0 CALCULATIONS

This section is not applicable to this SOP.

9.0 QUALITY ASSURANCE/QUALITY CONTROL

The following general quality assurance procedures apply:

1. All data must be documented on Chain of Custody records, Drum/Tank Sampling Data Sheets, Field Test Data Sheet for Drum/Tank Sampling, or within site logbooks.

2. All instrumentation must be operated in accordance with operating instructions as supplied by the manufacturer, unless otherwise specified in the work plan. Equipment checkout and calibration activities must occur prior to sampling/operation, and they must be documented.

10.0 DATA VALIDATION

This section is not applicable to this SOP.

11.0 HEALTH AND SAFETY

When working with potentially hazardous materials, follow U.S. EPA, OSHA, and corporate health and safety procedures.

More specifically, the opening of closed containers is one of the most hazardous site activities. Maximum efforts should be made to ensure the safety of the sampling team. Proper protective equipment and a general awareness of the possible dangers will minimize the risk inherent to sampling operations. Employing proper drum opening techniques and equipment will also safeguard personnel. The use of remote sampling equipment whenever feasible is highly recommended.

12.0 REFERENCES

Guidance Document for Cleanup of Surface Tank and Drum Sites, OSWER Directive 9380.0-3.

Drum Handling Practices at Hazardous Waste Sites, EPA-600/2-86-013.

APPENDIX A
Attachments
SOP #2009
November 1994

ATTACHMENT 1. Drum/Tank Sampling Data Sheet

Samplers: _____ Date: _____

Site Name: _____ Work Order Number: _____

Container Number/Sample Number: _____ REAC Task Leader: _____

SITE INFORMATION:

1. Terrain, drainage description:_____

2. Weather conditions (from observation):_____

   MET station on site: No Yes

CONTAINER INFORMATION:

1. Container type: Drum Tank Other: _____

2. Container dimensions: Shape:_____

   Approximate size:_____

3. Label present: No Yes: _____

   Other Markings: _____

   _____

   _____

   _____

4. Spill or leak present: No Yes Dimensions: _____

5. Container location: (Circle one) N/A See MapOther:

_____

_____

_____

_____

ATTACHMENT 1. Drum/Tank Sampling Data Sheet (cont)

SAMPLE INFORMATION:

1. Description: _____ liquid _____ solid (_____ powder or _____ crystals) _____ sludge

2. Color: _____ Vapors: _____

Other:_____

3. Local effects present: (damage - environmental, aterial)_____

FIELD MONITORING:

1. PID: _____ Background (clean zone)

_____ Probe used/Model used

_____ Reading from container opening

2. FID: _____ Background (clean zone)

_____ Reading from container opening

3. Radiation Meter:

_____ Model used

_____ Background (clean zone)

_____ Reading from container opening

4. Explosimeter/Oxygen Meter:

_____ Oxygen level from container opening

_____ LEL level from container opening

ATTACHMENT 2. Field Test Data Sheet for Drum/Tank Sampling

Samplers: _____ Date: _____

Site Name: _____ Work Order Number: 3347-040-001-_____

Container Number/Sample Number: _____ REAC Task Leader: _____

SAMPLE MONITORING INFORMATION:

1. PID: _____ Background (clean zone)

_____ Probe used/Model used

_____ Reading from sample

2. FID: _____ Background (clean zone)

_____ Reading from sample

3. Radiation Meter: _____ Model used

_____ Background (clean zone)

_____ Reading from sample

4. Explosimeter/Oxygen Meter: _____ Oxygen level (sample)

_____ LEL level (sample)

SAMPLE DESCRIPTION:

_____ Liquid _____ Solid _____ Sludge _____ Color _____ Vapors

WATER REACTIVITY:

1. Add small amount of sample to water: _____ bubbles _____ color change to _____

_____ vapor formation _____ heat _____ No Change

ATTACHMENT 2. Field Test Data Sheet for Drum/Tank Sampling (cont)

SPECIFIC GRAVITY TEST (compared to water):

1. Add small amount of sample to water: _____ sinks _____ floats

2. If liquid sample sinks, screen for chlorinated compounds. If liquid sample floats and appears to be oily, screen for PCBs (Chlor-N-Oil kit).

CHLOR N OIL TEST KIT INFORMATION:

1. Test kit used for this sample: Yes No

2. Results: _____ PCB not present _____ PCB present, less than 50 ppm

_____ PCB present, greater than 50 ppm _____ 100% PCB present

WATER SOLUBILITY TEST:

1. Add approximately one part sample to five parts water. You may need to stir and heat gently. **[DO NOT HEAT IF WATER REACTIVE!]** Results: _____ total _____ partial _____ no solubility

pH OF AQUEOUS SOLUTION:

1. Using 0-14 pH paper, check pH of water/sample solution: _____.

SPILL-FYTER CHEMICAL CLASSIFIER STRIPS:

1. Acid/Base Risk: (Circle one)	Color Change
Strong acid (0)	RED
Moderately acidic (1-3)	ORANGE
Weak acid (5)	YELLOW
Neutral (7)	GREEN

ATTACHMENT 2. Field Test Data Sheet for Drum/Tank Sampling (cont)

Moderately basic (9-11)	Dark GREEN
Strong Base (13-14)	Dark BLUE

2. Oxidizer Risk: (Circle one)

Not Present	WHITE
Present	BLUE, RED, OR ANY DIVERGENCE FROM WHITE

3. Fluoride Risk: (Circle one)

Not Present	PINK
Present	YELLOW

4. Petroleum Product, Organic Solvent Risk: (Circle one)

Not Present	LIGHT BLUE
Present	DARK BLUE

5. Iodine, Bromine, Chlorine Risk: (Circle one)

Not Present	PEACH
Present	WHITE OR YELLOW

ATTACHMENT 2. Field Test Data Sheet for Drum/Tank Sampling (cont)

SETAFLASH IGNITABILITY TEST:

140°F	Ignitable: _____	Non-Ignitable _____
160°F	Ignitable: _____	Non-Ignitable _____
_____	Ignitable: _____	Non-Ignitable _____
_____	Ignitable: _____	Non-Ignitable _____
_____	Ignitable: _____	Non-Ignitable _____
_____	Ignitable: _____	Non-Ignitable _____

Comments:

_____
_____
_____
_____
_____
_____
_____

HAZCAT® KIT TESTS:

1. Test: _____ Outcome: _____

Comments:_____

_____

2. Test: _____ Outcome: _____

Comments:_____

_____

ATTACHMENT 2. Field Test Data Sheet for Drum/Tank Sampling (cont)

3. Test: _____ Outcome: _____

Comments:_____

_____

4. Test: _____ Outcome: _____

Comments:_____

_____

5. Test: _____ Outcome: _____

Comments:_____

_____

HAZCAT® PESTICIDES KIT:

Present: _____ Not Present: _____

Comments: _____

_____

APPENDIX B
Figures
SOP #2009
November 1994

Figure 1. Universal Bung Wrench

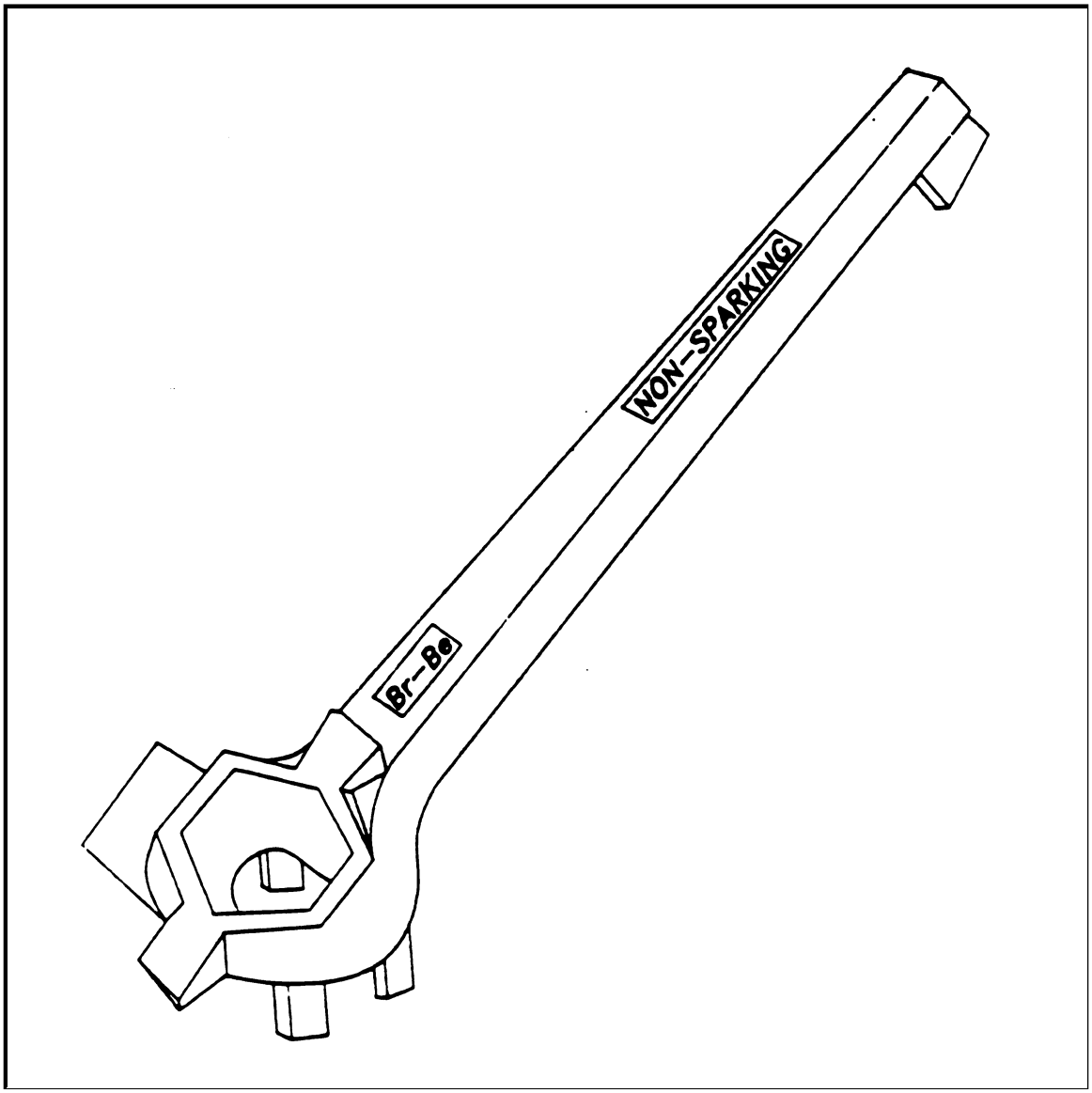

Figure 2. Drum Deheader

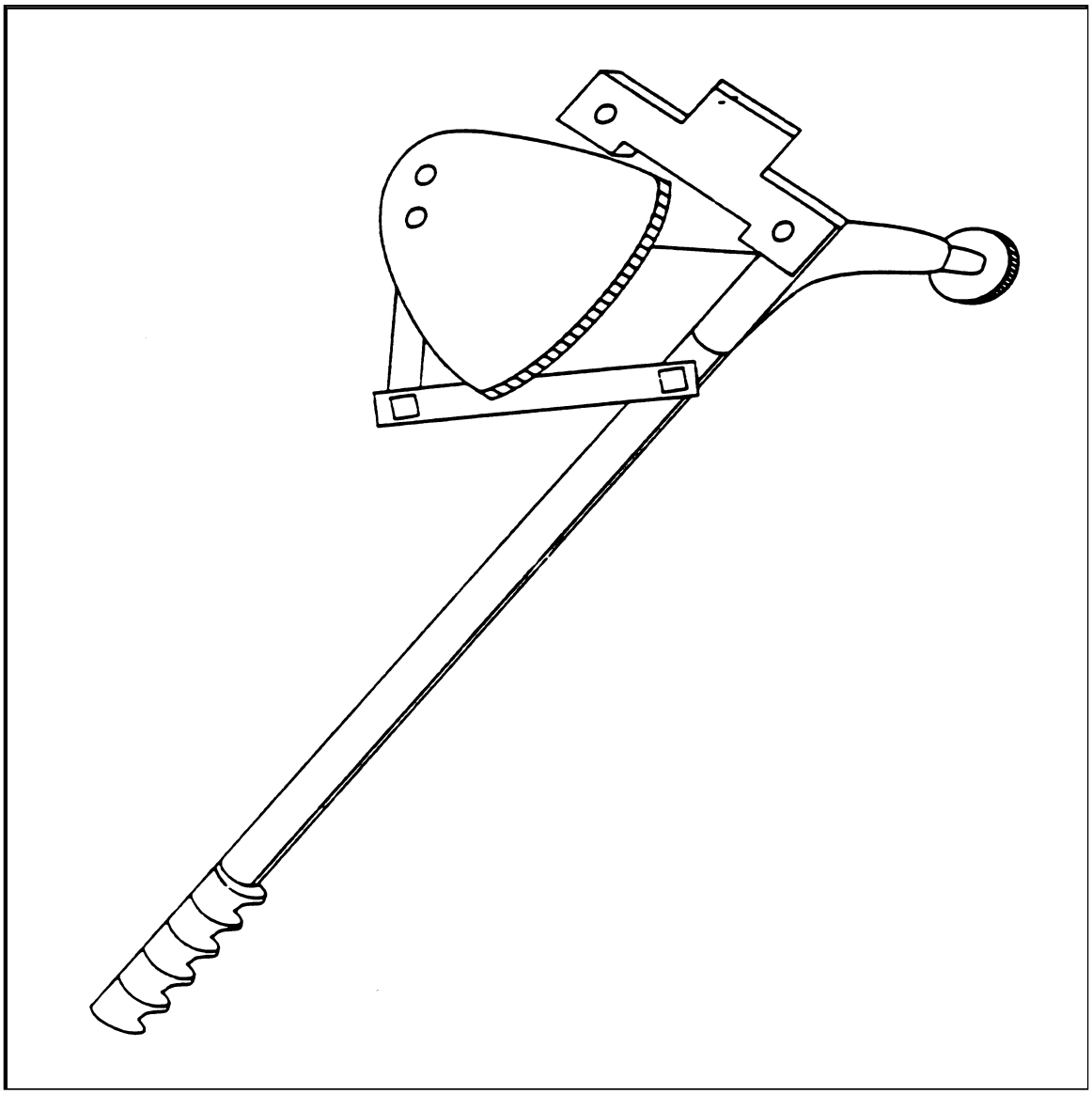

Figure 3. Hand Pick, Pickaxe, and Hand Spike

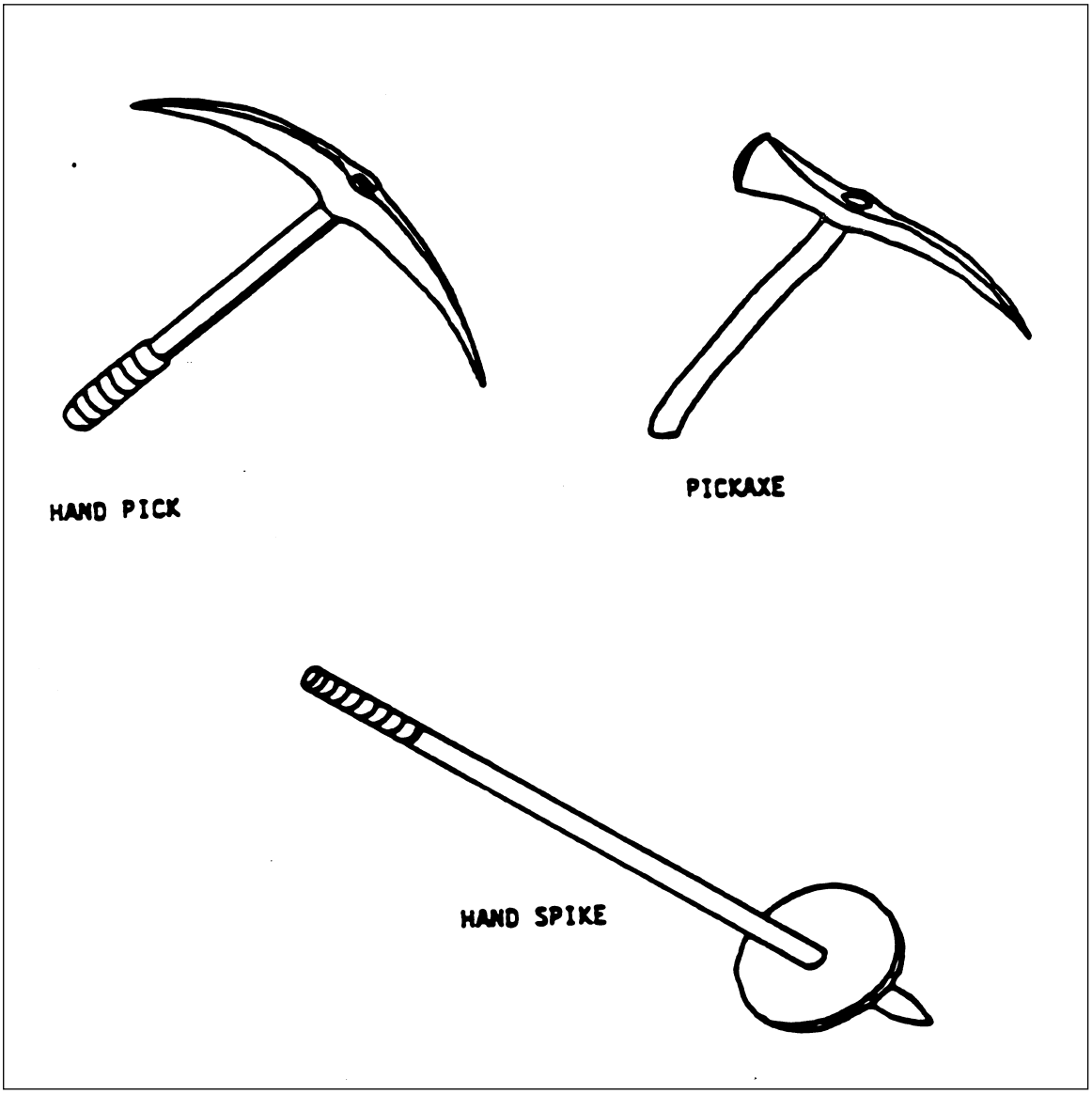

Figure 4. Backhoe Spike

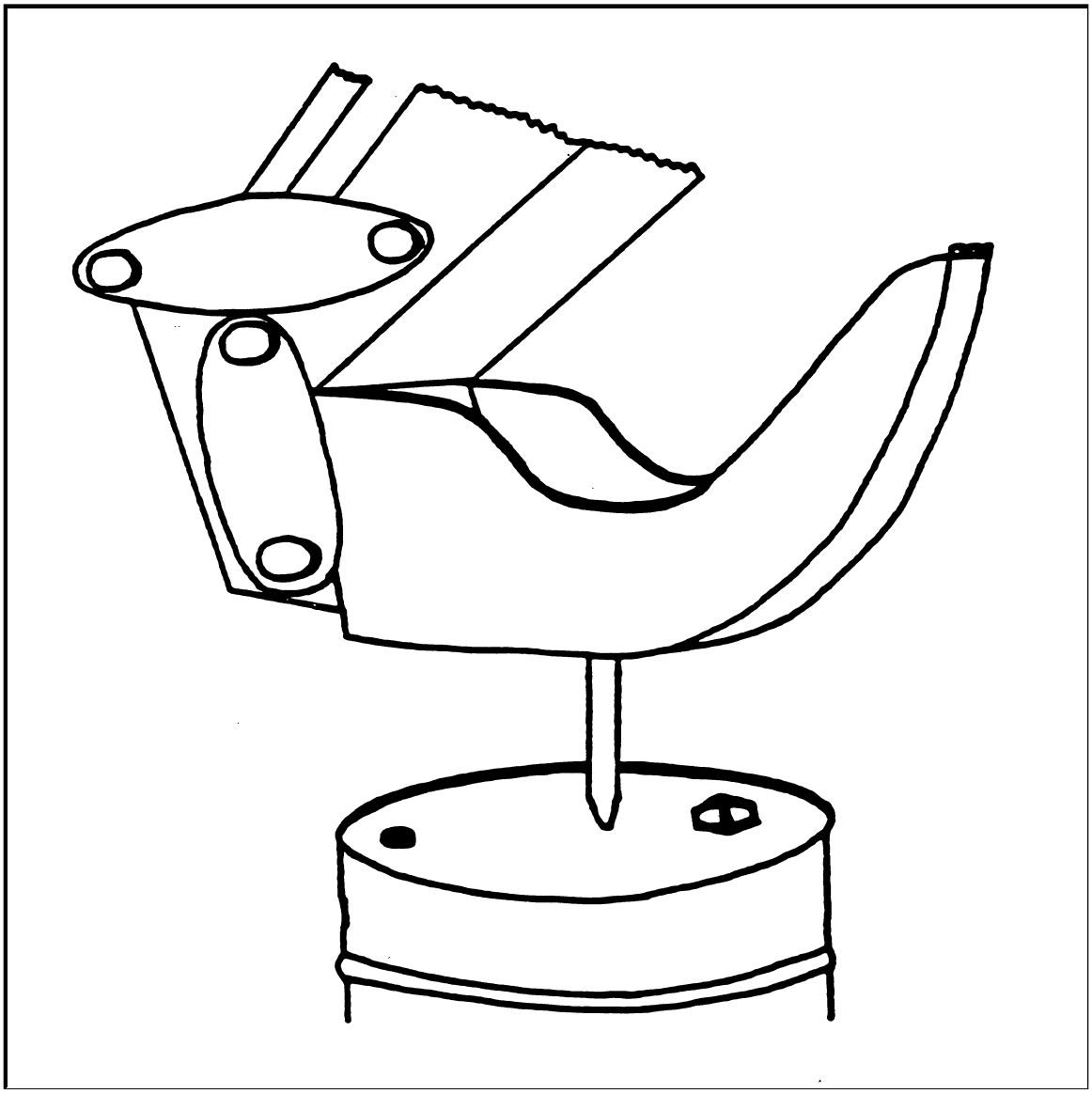

Figure 5. Hydraulic Drum Opener

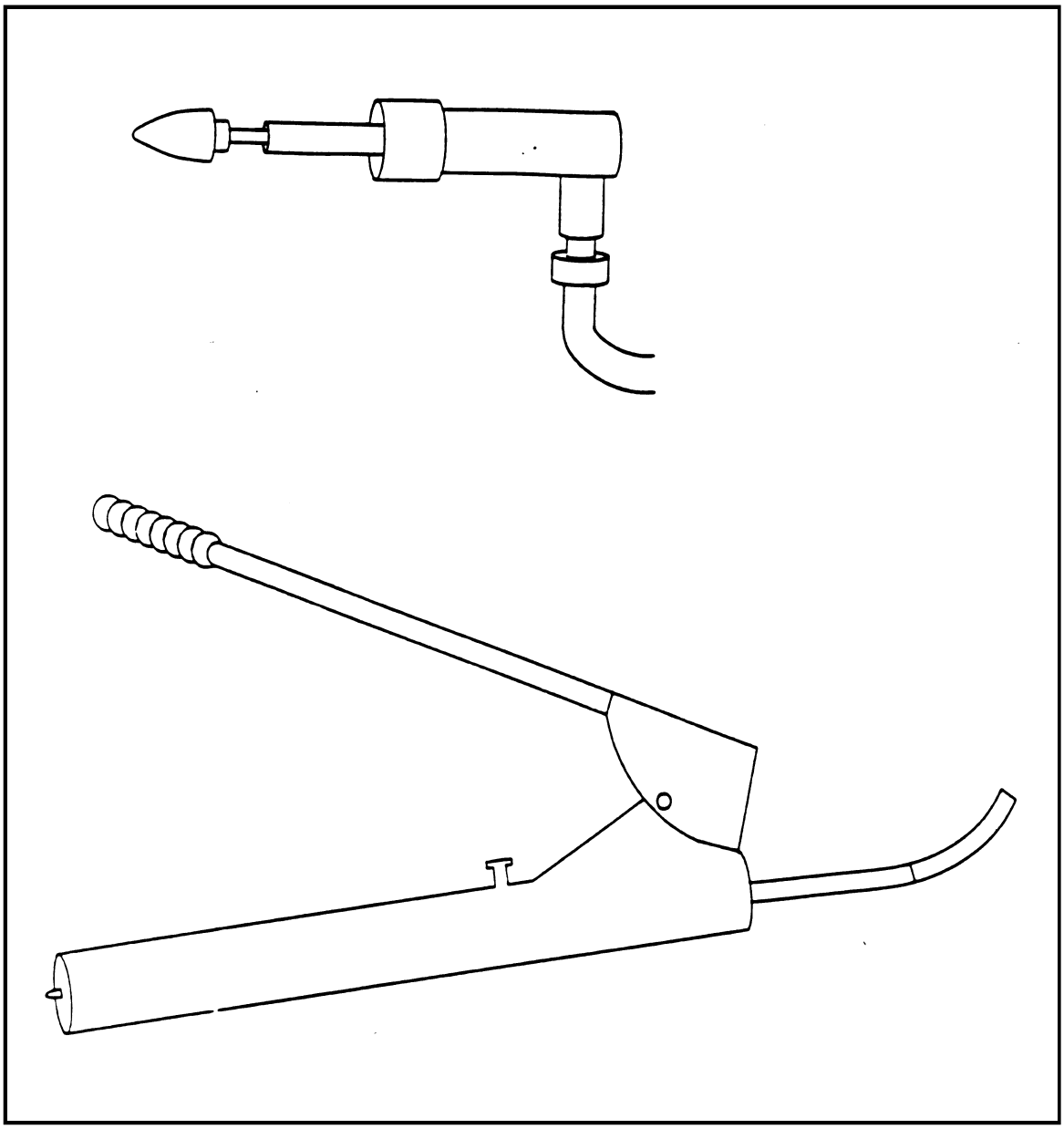

Figure 6. Pneumatic Bung Remover

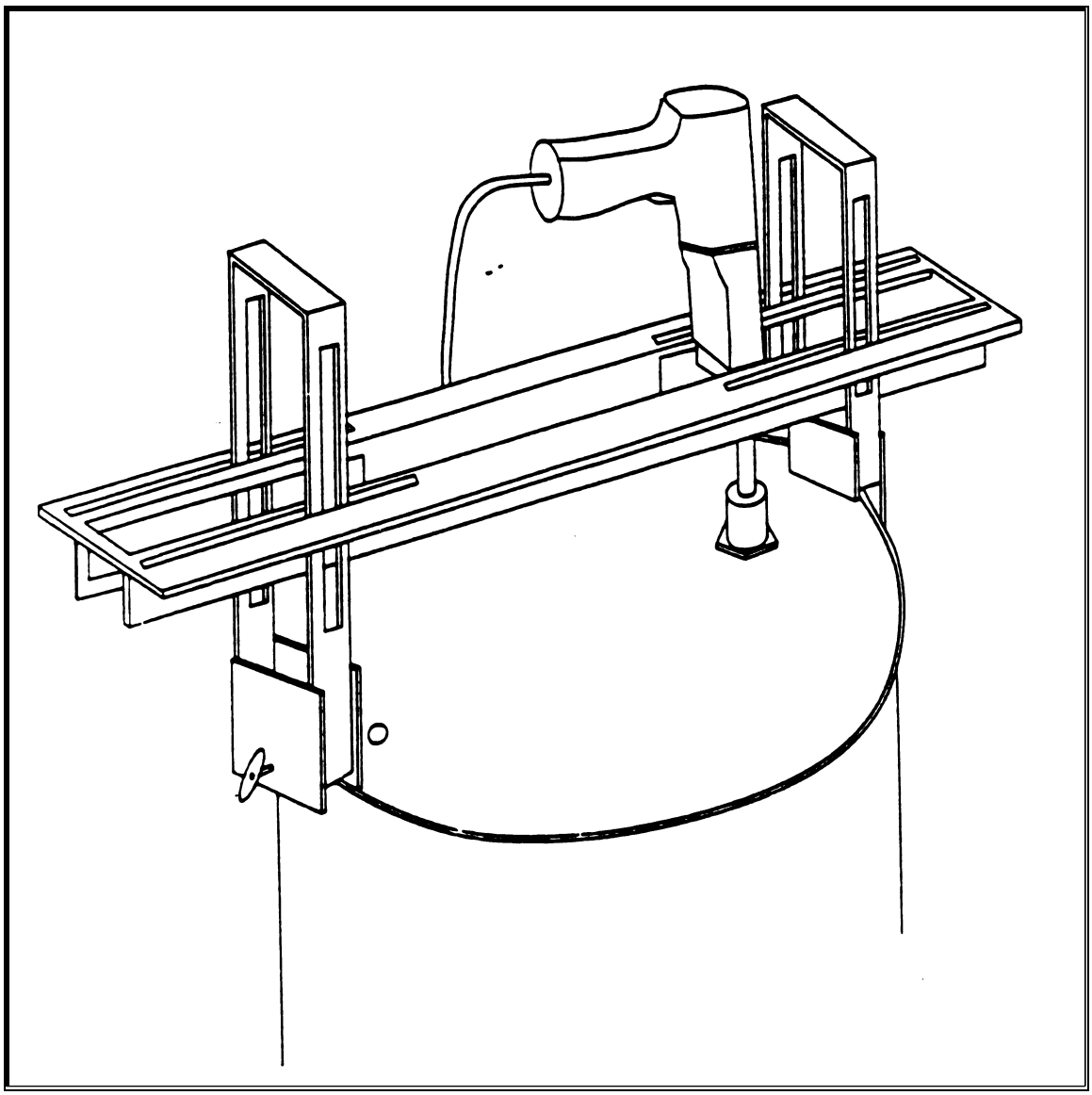

Figure 7. Glass Thief

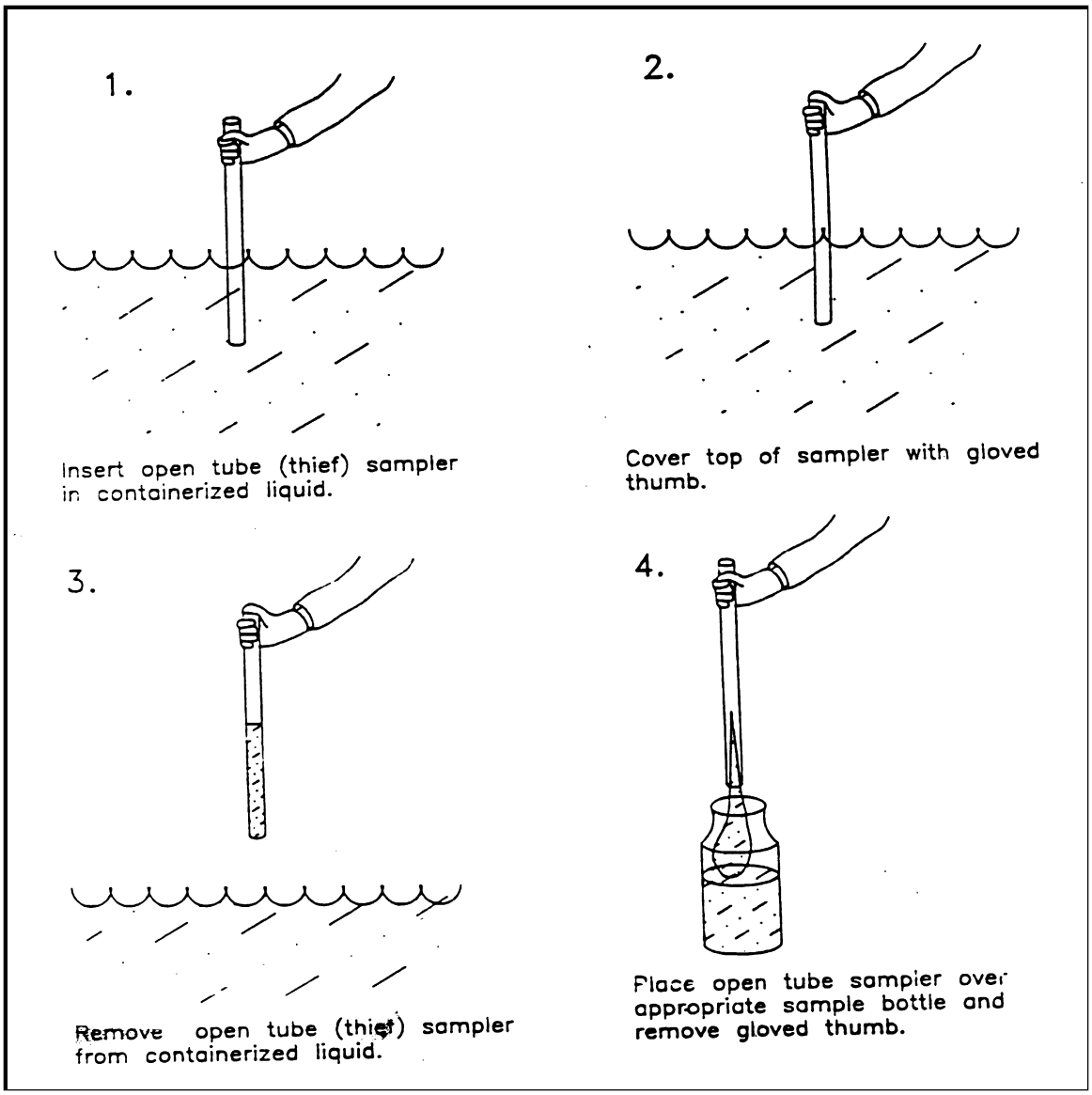

Figure 8. COLIWASA

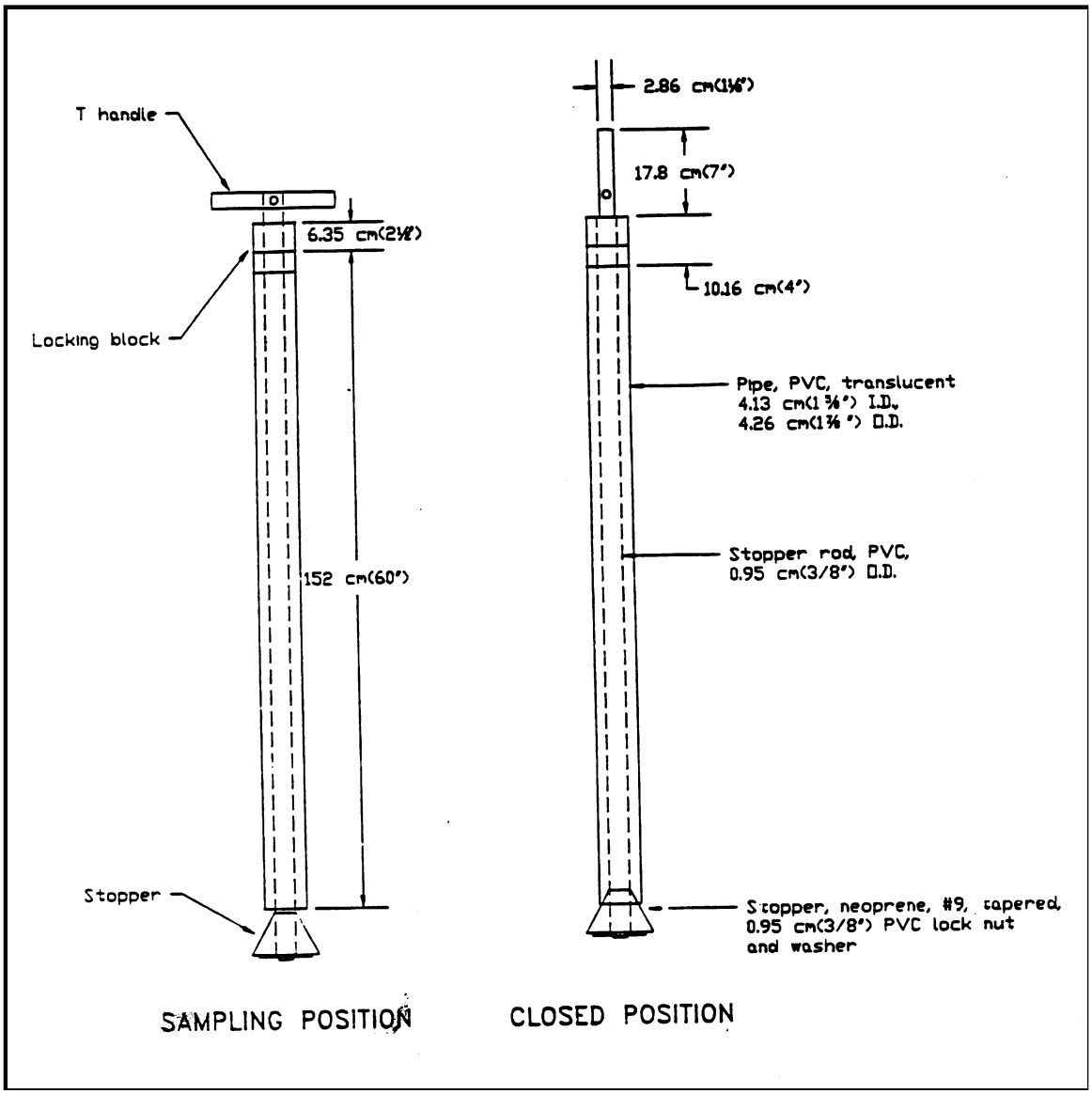

TANK SAMPLING

CONTENTS

1.0 SCOPE AND APPLICATION

2.0 METHOD SUMMARY

3.0 SAMPLE PRESERVATION, CONTAINERS, HANDLING, AND STORAGE

4.0 INTERFERENCES AND POTENTIAL PROBLEMS

5.0 EQUIPMENT/APPARATUS

6.0 REAGENTS

7.0 PROCEDURES

- 7.1 Preparation
- 7.2 Preliminary Inspection
- 7.3 Sampling Procedure
- 7.4 Sampling Devices
  - 7.4.1 Bacon Bomb
  - 7.4.2 Sludge Judge
  - 7.4.3 Subsurface Grab
  - 7.4.4 Glass Thief
  - 7.4.5 Bailer
  - 7.4.6 COLIWASA

8.0 CALCULATIONS

9.0 QUALITY ASSURANCE/QUALITY CONTROL

10.0 DATA VALIDATION

11.0 HEALTH AND SAFETY

12.0 REFERENCES

13.0 APPENDICES

- A - Calculations
- B - Figures

SUPERCEDES: SOP #2010; Revision 1.0; 08/16/91; U.S. EPA Contract 68-03-3482.

1.0 SCOPE AND APPLICATION

The purpose of this standard operating procedure (SOP) is to provide technical guidance for the implementation of sampling protocols for tanks and other confined spaces from outside the vessel.

These are standard (i.e., typically applicable) operating procedures which may be varied or changed as required, dependent on site conditions, equipment limitations or limitations imposed by the procedure or other procedure limitations. In all instances, the ultimate procedures employed should be documented and associated with the final report.

Mention of trade names or commercial products does not constitute U.S. EPA endorsement or recommendation for use.

2.0 METHOD SUMMARY

The safe collection of a representative sample should be the criteria for selecting sample locations. A representative sample can be collected using techniques or equipment that are designed for obtaining liquids or sludges from various depths. The structure and characteristics of storage tanks present problems with collection of samples from more than one location; therefore, the selection of sampling devices is an important consideration.

Depending on the type of vessel and characteristics of the material to be sampled, one can choose a bacon bomb sampler, sludge judge, subsurface grab sampler, glass thief, bailer or Composite Liquid Waste Sampler (COLIWASA) to collect the sample. A sludge judge, bacon bomb or COLIWASA can be used to determine if the tank contents are stratified. Various other custom-made samplers may be used depending on the specific application.

All sample locations should be surveyed for air quality prior to sampling. At no time should sampling continue with an LEL reading greater than 25%.

3.0 SAMPLE PRESERVATION, CONTAINERS, HANDLING, AND STORAGE

Samples collected from tanks are considered waste samples and as such, addition of preservatives is not required due to the potential reaction of the sample with the preservative. Samples should however, be cooled to 4°C with ice and protected from sunlight in order to minimize any potential reaction due to the light sensitivity of the sample.

Sample bottles for collection of waste liquids, sludges, or solids are typically wide mouth amber jars with Teflon-lined screw caps. Actual volume required for analysis should be determined in conjunction with the laboratory performing the analysis.

Waste sample handling procedures should be as follows:

1. Place sample container in two ziplock plastic bags.

2. Place each bagged container in a 1-gallon covered can containing absorbent packing material. Place the lid on the can.

3. Mark the sample identification number on the outside of the can.

4. Place the marked cans in a cooler, and fill remaining space with absorbent packing material.

5. Fill out chain of custody record for each cooler, place in plastic, and affix to inside lid of cooler.

6. Secure and custody seal the lid of cooler.

7. Arrange for the appropriate transportation mode consistent with the type of hazardous waste involved.

4.0 INTERFERENCES AND POTENTIAL PROBLEMS

Sampling a storage tank requires a great deal of manual dexterity, often requiring climbing to the top of the tank upon a narrow vertical or spiral stairway or ladder while wearing protective clothing and carrying sampling equipment.

Before climbing onto the vessel, a structural survey should be performed. This will ensure appropriate consideration of safety and accessibility prior to initiation of any field activities.

As in all opening of containers, extreme caution should be taken to avoid ignition or combustion of volatile contents. All tools used must be constructed of a non-sparking material and electronic instruments must be intrinsically safe.

All sample locations should be surveyed for air quality prior to sampling. At no time should sampling continue with a lower explosive limit (LEL) reading greater than 25%.

5.0 EQUIPMENT/APPARATUS

Storage tank materials include liquids, sludges, still bottoms, and solids of various types. The type of sampler chosen should be compatible with the waste. Samplers commonly used for tanks include: a bacon bomb sampler, sludge judge, glass thief, bailer, COLIWASA, and subsurface grab sampler.

<u>Tank Sampling Equipment Checklist:</u>

- Sampling plan
- Safety equipment
- Tape measure
- Weighted tape line, measuring stick or equivalent
- Camera/film
- Stainless steel bucket or bowl
- Sample containers
- Ziplock plastic bags
- Logbook
- Labels
- Field data sheets
- Chain of Custody records
- Flashlight (explosion proof)

- Coolers
- Ice
- Decontamination supplies
- Bacon bomb sampler
- Sludge judge
- Glass thieves
- Bailers
- COLIWASA
- Subsurface grab sampler
- Water/oil level indicator
- OVA (organic vapor analyzer or equivalent)
- Explosimeter/oxygen meter
- High volume blower

6.0 REAGENTS

Reagents are not typically required for the preservation of waste samples. However, reagents will be utilized for decontamination of equipment. Decontamination solutions required are specified in ERT/SERAS SOP #2006, Sampling Equipment Decontamination.

7.0 PROCEDURE

7.1 Preparation

1. Determine the extent of the sampling effort, the sampling methods to be employed, and the types and amounts of equipment and supplies needed.

2. Obtain necessary sampling and monitoring equipment.

3. Decontaminate or preclean equipment, and ensure that it is in working order.

4. Prepare scheduling and coordinate with staff, clients, and regulatory agency, if appropriate.

5. Perform a general site survey prior to site entry in accordance with the site specific Health and Safety Plan.

6. Identify and mark all sampling locations.

7.2 Preliminary Inspection

1. Inspect the external structural characteristics of each tank and record in the site logbook. Potential sampling points should be evaluated for safety, accessibility and sample quality.

2. Prior to opening a tank for internal inspection, the tank sampling team shall:

   - Review safety procedures and emergency contingency plans with the Health and Safety Officer.
   - Ensure that the tank is properly grounded.
   - Remove all sources of ignition from the immediate area.

3. Each tank should be mounted using appropriate means. Remove manway covers using non-sparking tools.

4. Collect air quality measurements for each potential sample location using an explosimeter/oxygen meter for a lower explosive limit (LEL/O_2) reading and an OVA/HNU for an organic vapor concentration. Both readings should be taken from the tank headspace, above the sampling port, and in the breathing zone.

5. Prior to commencing sampling, the tank headspace should be cleared of any toxic or explosive vapor concentration using a high volume explosion proof blower. No work shall start if LEL readings exceed 25%. At 10% LEL, work can continue but with extreme caution.

7.3 Sampling Procedure

1. Determine the depth of any and all liquid, solid, and liquid/solid interface, and depth of sludge using a weighted tape measure, probe line, sludge judge, or equivalent.

2. Collect liquid samples from one (1) foot below the surface, from mid-depth of liquid, and from one (1) foot above the bottom sludge layer. This can be accomplished with a subsurface grab sampler or bacon bomb. For liquids less than five (5) feet in depth, use a glass thief or COLIWASA to collect the sample.

   If sampling storage tanks, vacuum trucks, or process vessels, collect at least one sample from each compartment in the tank. Samples should always be collected through an opened hatch at the top of the tank. Valves near the bottom should not be used, because of their questionable or unknown integrity. If such a valve cannot be closed once opened, the entire tank contents may be lost to the ground surface. Also, individual strata cannot be sampled separately through a valve near the bottom.

3. Compare the three samples for visual phase differences. If phase differences appear, systematic iterative sampling should be performed. By halving the distance between two discrete sampling points, one can determine the depth of the phase change.

4. If another sampling port is available, sample as above to verify the phase information.

5. Measure the inside diameter of the tank and determine the volume of wastes using the depth measurements (Appendix A). Measuring the external diameter may be misleading as some tanks are insulated or have external supports that are covered.

6. Sludges can be collected using a bacon bomb sampler, glass thief, or sludge judge.

7. Record all information on the sample data sheet or site logbook. Label the container with the appropriate sample tag.

8. Decontaminate sampling equipment as per ERT/SERAS SOP #2006, Sampling Equipment Decontamination.

7.4 Sampling Devices

7.4.1 Bacon Bomb Sampler

The bacon bomb sampler (Figure 1, Appendix B) is designed for the collection of material from various levels within a storage tank. It consists of a cylindrical body, usually made of chrome-plated brass and bronze with an internal tapered plunger that acts as a valve to admit the sample. A line attached to the top of the plunger opens and closes the valve. A line is attached to the removable top cover which has a locking mechanism to keep the plunger closed after sampling.

Procedures for Use:

1. Attach the sample line and the plunger line to the sampler.
2. Measure and then mark the sampling line at the desired depth.
3. Gradually lower the sampler by the sample line until the desire level is reached.
4. When the desired level is reached, pull up on the plunger line and allow the sampler to fill before releasing the plunger line to seal off the sampler.
5. Retrieve the sampler by the sample line being careful not to pull up on the plunger line and thereby prevent accidental opening of the bottom valve.
6. Rinse or wipe off the exterior of the sampler body.
7. Position the sampler over the sample container and release its contents by pulling up on the plunger line.
8. Cap the sample container tightly and place prelabeled sample container in a carrier.
9. Replace the flange or manway or place plastic over the tank.
10. Log all samples in the site logbook and on field data sheets and label all samples.
11. Package samples and complete necessary paperwork.
12. Transport sample to decontamination zone for preparation for transport to analytical laboratory.

7.4.2 Sludge Judge

A sludge judge (Figure 2, Appendix B) is used for obtaining an accurate reading of settleable solids in any liquid. The sampling depth is dependent upon the length of the sludge judge. The sampler consists of 3/4" plastic pipe in 5-ft. sections, marked at 1-ft. increments, with screw-type fittings.

Procedures for Use:

1. Lower the sludge judge to the bottom of the tank.

2. When the bottom has been reached, the pipe is allowed to fill to the surface level. This will seat the check valve, trapping the column of material.

3. When the unit has been raised clear of the tank liquid, the amount of sludge in the sample can be read using the one foot increments marked on the pipe sections.

4. By touching the pin extending from the bottom section against a hard surface, the material is released from the unit.

5. Cap the sample container tightly and place prelabeled sample container in a carrier.

6. Replace the flange or manway or place plastic over the tank.

7. Log all samples in the site logbook and on field data sheets and label all samples.

8. Package samples and complete necessary paperwork.

9. Transport sample to decontamination zone for preparation for transport to analytical laboratory.

7.4.3 Subsurface Grab Sampler

Subsurface grab samplers (Figure 3, Appendix B) are designed to collect samples of liquids at various depths. The sampler is usually constructed of aluminum or stainless steel tubing with a polypropylene or Teflon head that attaches to a 1-liter sample container.

Procedures for Use:

1. Screw the sample bottle onto the sampling head.

2. Lower the sampler to the desired depth.

3. Pull the ring at the top which opens the spring-loaded plunger in the head assembly.

4. When the bottle is full, release the ring, lift sampler, and remove sample bottle.

5. Cap the sample container tightly and place prelabeled sample container in a carrier.

6. Replace the flange or manway or place plastic over the tank.

7. Log all samples in the site logbook and on field data sheets and label all samples.

8. Package samples and complete necessary paperwork.

9. Transport sample to decontamination zone for preparation for transport to analytical laboratory.

7.4.4 Glass Thief

The most widely used implement for sampling is a glass tube commonly referred to as a glass thief (Figure 4, Appendix B). This tool is simple, cost effective, quick, and collects a sample without having to decontaminate. Glass thieves are typically 6mm to 16mm I.D. and 48 inches long.

Procedures for Use:

1. Remove cover from sample container.

2. Insert glass tubing almost to the bottom of the tank or until a solid layer is encountered. About one foot of tubing should extend above the drum.

3. Allow the waste in the tank to reach its natural level in the tube.

4. Cap the top of the sampling tube with a tapered stopper or thumb, ensuring liquid does not come into contact with stopper.

5. Carefully remove the capped tube from the tank and insert the uncapped end in the sample container. Do not spill liquid on the outside of the sample container.

6. Release stopper and allow the glass thief to drain until the container is approximately 2/3 full.

7. Remove tube from the sample container, break it into pieces and place the pieces in the tank.

8. Cap the sample container tightly and place prelabeled sample container in a carrier.

9. Replace the bung or place plastic over the tank.

10. Log all samples in the site logbook and on field data sheets and label all samples.

11. Package samples and complete necessary paperwork.

12. Transport sample to decontamination zone for preparation for transport to analytical laboratory.

In many instances a tank containing waste material will have a sludge layer on the bottom. Slow insertion of the sample tube down into this layer and then a gradual withdrawal will allow the sludge to act as a bottom plug to maintain the fluid in the tube. The plug can be gently removed and placed into the sample container by the use of a stainless steel lab spoon.

7.4.5 Bailer

The positive-displacement volatile sampling bailer (Figure 5, Appendix B) (by GPI) is perhaps the most appropriate for collection of water samples for volatile analysis. Other bailer types (messenger, bottom fill, etc.) are less desirable, but may be mandated by cost and site conditions. Generally, bailers can provide an acceptable sample, providing that the sampling personnel use extra care in the collection process.

Operation

1. Make sure clean plastic sheeting surrounds the tank.

2. Attach a line to the bailer.

3. Lower the bailer slowly and gently into the tank so as not to splash the bailer into the tank contents.

4. Allow the bailer to fill completely and retrieve the bailer from the tank.

5. Begin slowly pouring from the bailer.

6. Cap the sample container tightly and place prelabeled sample container in a carrier.

7. Replace the flange or manway or place plastic over the tank.

8. Log all samples in the site logbook and on field data sheets and label all samples.

9. Package samples and complete necessary paperwork.

10. Transport sample to decontamination zone for preparation for transport to analytical laboratory.

7.4.6 COLIWASA

Sampling devices are available that allow collection of a sample from the full depth of a tank and maintain its integrity in the transfer tube until delivery to the sample bottle. The sampling device is known as a Composite Liquid Waste Sampler (COLIWASA) (Figure 6, Appendix B). The COLIWASA is a much cited sampler designed to permit representative sampling of multiphase wastes from tanks and other containerized wastes.

One configuration consists of a 152 cm by 4 cm I.D. section of tubing with a neoprene stopper at one end attached by a rod running the length of the tube to a locking mechanism at the other end.

Manipulation of the locking mechanism opens and closes the sampler by raising and lowering the neoprene stopper.

The major drawbacks associated with using a COLIWASA concern decontamination and costs. The sampler is difficult to decontaminate in the field, and its high cost in relation to alternative procedures (glass tubes) makes it an impractical throwaway item. Disposable COLIWASA's are a viable alternative. However, the COLIWASA is still the sampling device of choice for specific applications, especially in instances where a true representation of a multiphase waste is absolutely necessary.

Procedures for Use:

1. Put the sampler in the open position by placing the stopper rod handle in the T-position and pushing the rod down until the handle sits against the sampler's locking block.

2. Slowly lower the sampler into the liquid waste. Lower the sampler at a rate that permits the levels of the liquid inside and outside the sampler tube to be about the same. If the level of the liquid in the sample tube is lower than that outside the sampler, the sampling rate is too fast and will result in a non-representative sample.

3. When the sampler stopper hits the bottom of the waste container, push the sampler tube downward against the stopper to close the sampler. Lock the sampler in the closed position by turning the T-handle until it is upright and one end rests tightly on the locking block.

4. Slowly withdraw the sample from the waste container with one hand while wiping the sampler tube with a disposable cloth or rag with the other hand.

5. Carefully discharge the sample into a suitable sample container by slowly pulling the lower end of the T-handle away from the locking block while the lower end of the sampler is positioned in a sample container.

6. Cap the sample container tightly and place prelabeled sample container in a carrier.

7. Replace the bung or place plastic over the tank.

8. Log all samples in the site logbook and on field data sheets and label all samples.

9. Package samples and complete necessary paperwork.

10. Transport sample to decontamination zone for preparation for transport to analytical laboratory.

8.0 CALCULATIONS

There are no specific calculations for these procedures. Refer to Appendix A regarding calculations utilized in determining tank volumes.

9.0 QUALITY ASSURANCE/QUALITY CONTROL

There are no specific quality assurance activities which apply to the implementation of these procedures. However, the following general QA procedures apply:

1. All data must be documented on field data sheets or within site logbooks.

2. All instrumentation must be operated in accordance with operating instructions as supplied by the manufacturer, unless otherwise specified in the work plan. Equipment checkout and calibration activities must occur prior to sampling/operation and they must be documented.

10.0 DATA VALIDATION

This section is not applicable to this SOP.

11.0 HEALTH AND SAFETY

When working with potentially hazardous materials, follow U.S. EPA, OSHA, and corporate health and safety procedures. More specifically, the hazards associated with tank sampling may cause bodily injury, illness, or death to the worker. Failure to recognize potential hazards of waste containers is the cause of most accidents. It should be assumed that the most unfavorable conditions exist, and that the danger of explosion and poisoning will be present. Hazards specific to tank sampling are:

1. Hazardous atmospheres which are either flammable, toxic, asphyxiating, or corrosive.

2. If activation of electrical or mechanical equipment would cause injury, each piece of equipment should be manually isolated to prevent inadvertent activation while workers are occupied.

3. Communication is of utmost importance between the sampling worker and the standby person to prevent distress or injury going unnoticed.

4. Proper procedures to evacuate a tank with forced air and grounding of equipment and tanks should be reviewed.

12.0 REFERENCES

Guidance Document for Cleanup of Surface Tank and Drum Sites, OSWER Directive 9380.0-3.

Drum Handling Practices at Hazardous Waste Sites, EPA-600/2-86-013.

APPENDIX A
Calculations
SOP #2010
November 1994

Various Volume Calculations

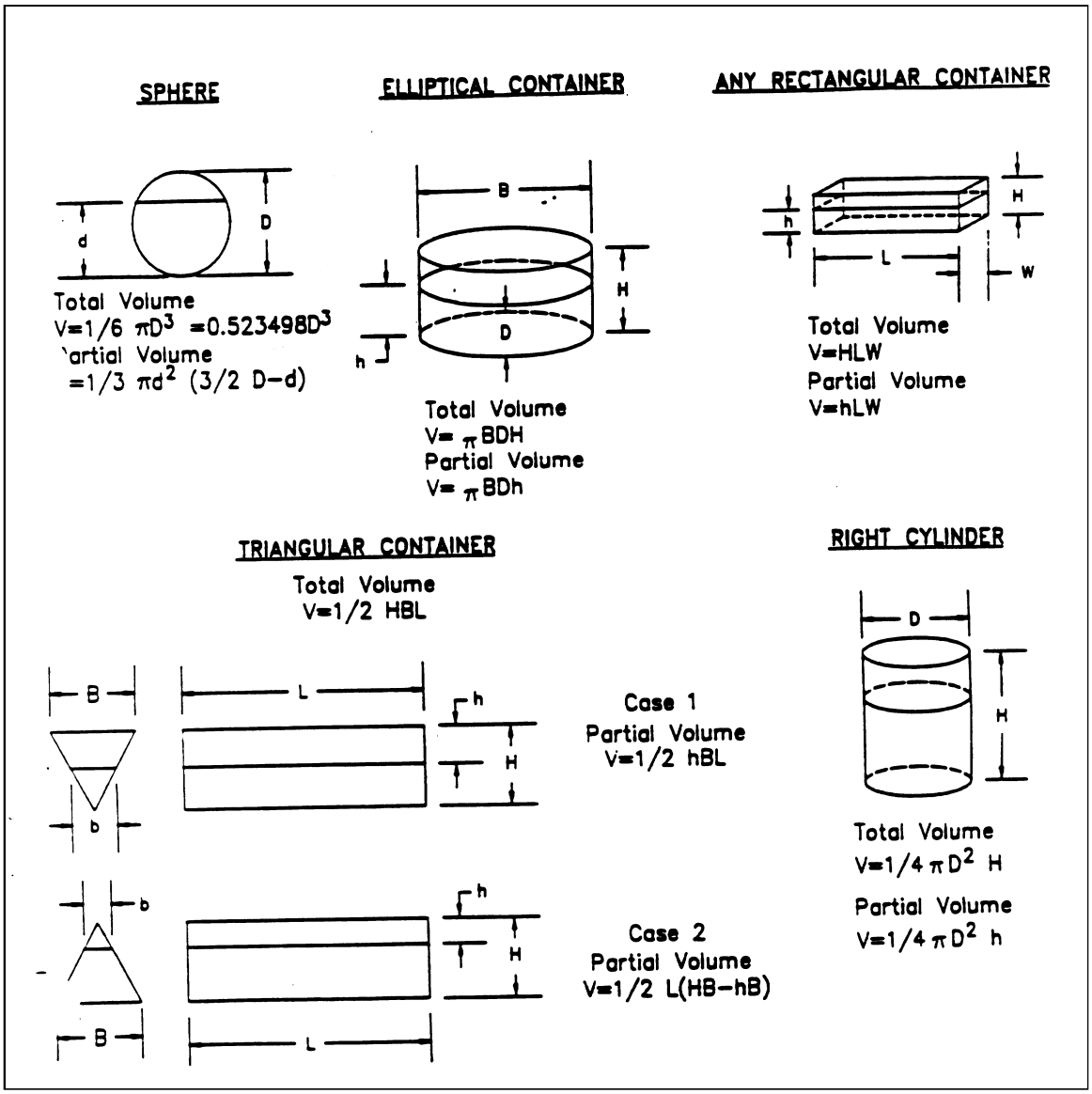

Various Volume Calculations (Cont'd)

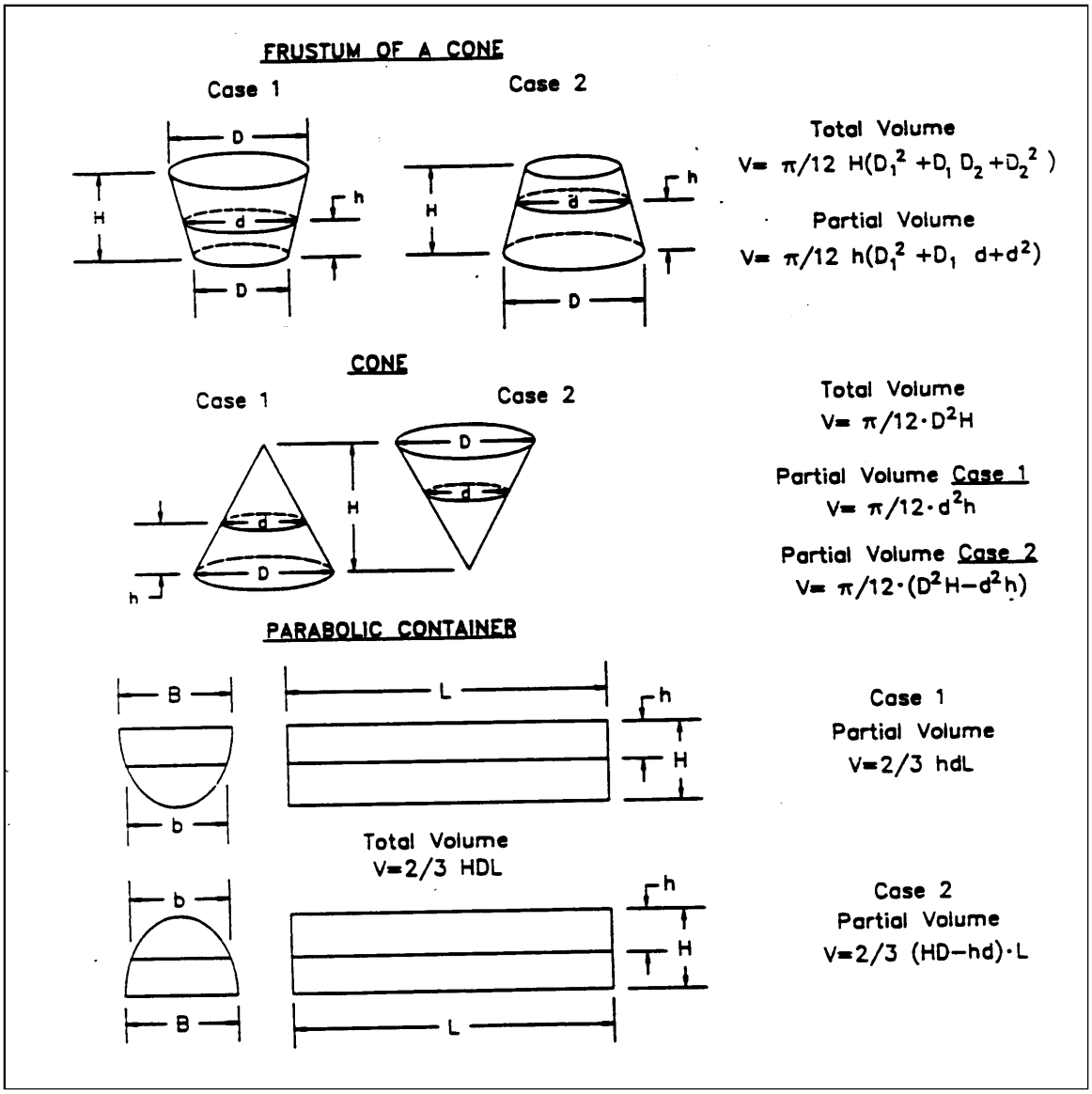

APPENDIX B
Figures
SOP #2010
November 1994

FIGURE 1. Bacon Bomb Sampler

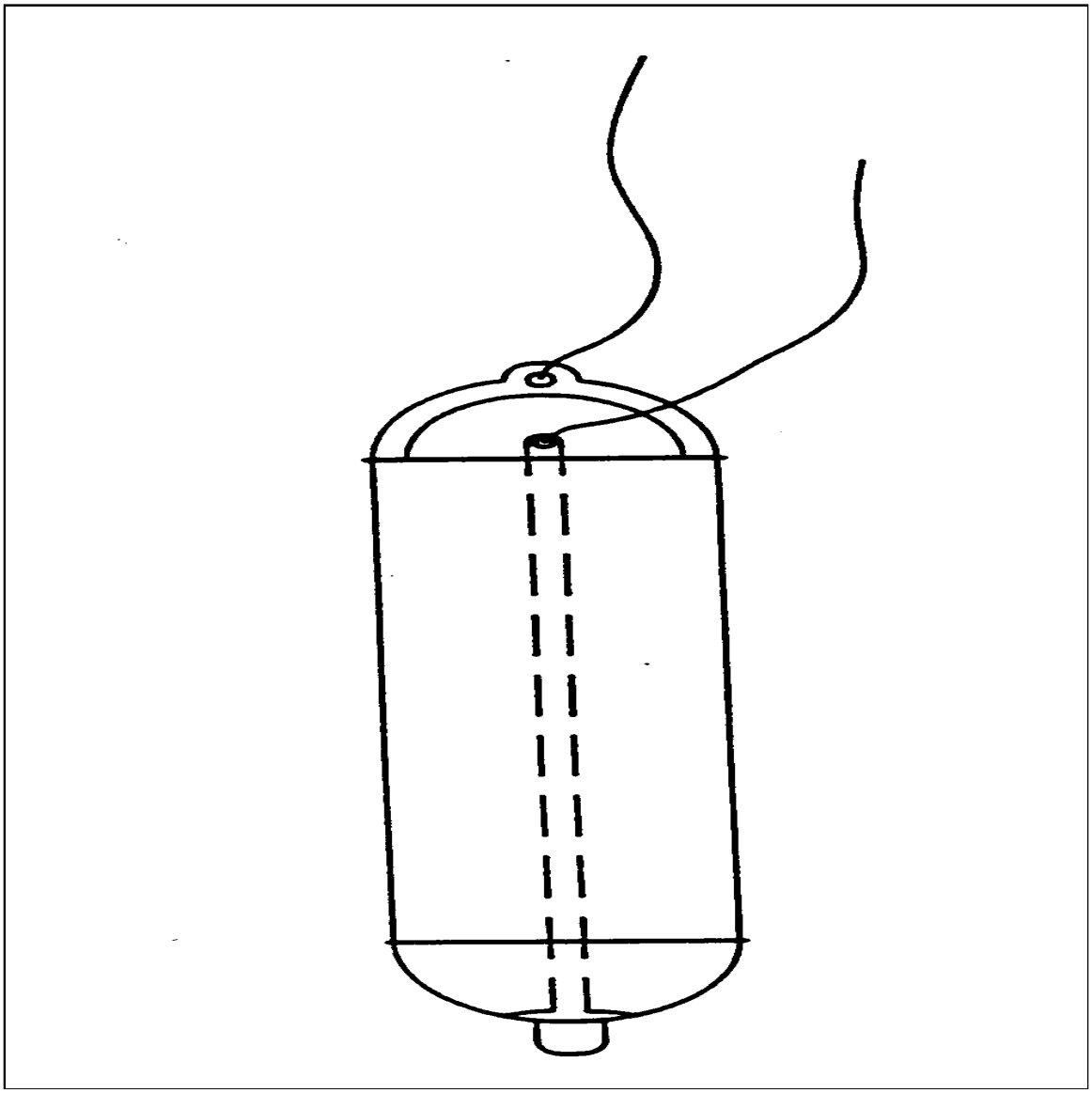

FIGURE 2. Sludge Judge

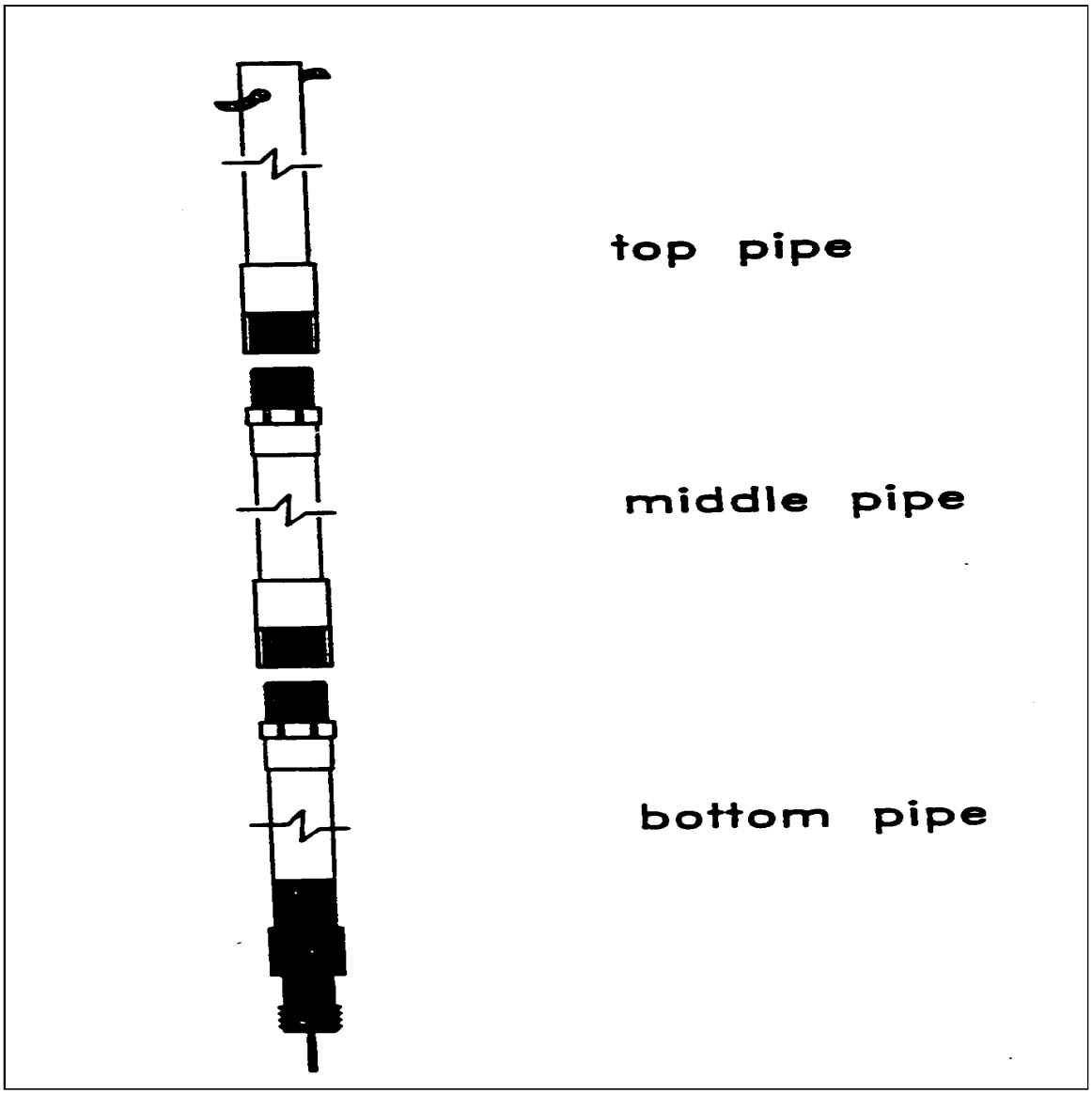

FIGURE 3. Subsurface Grab Sampler

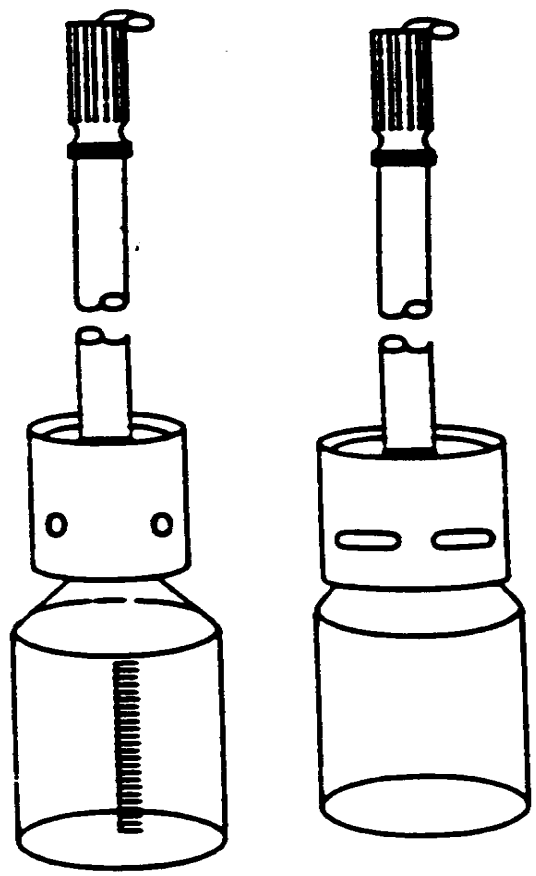

FIGURE 4. Glass Thief

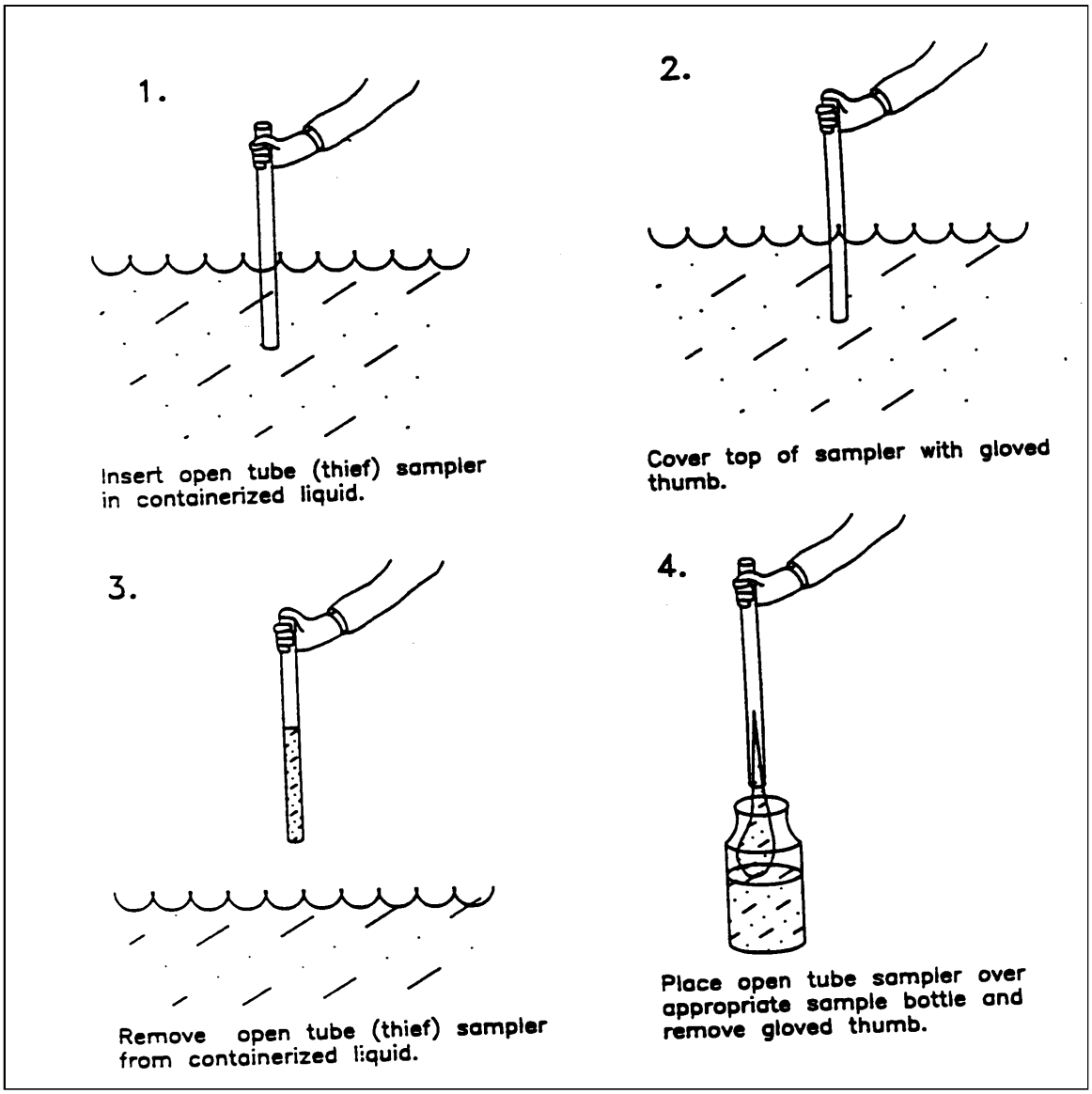

FIGURE 5. Bailer

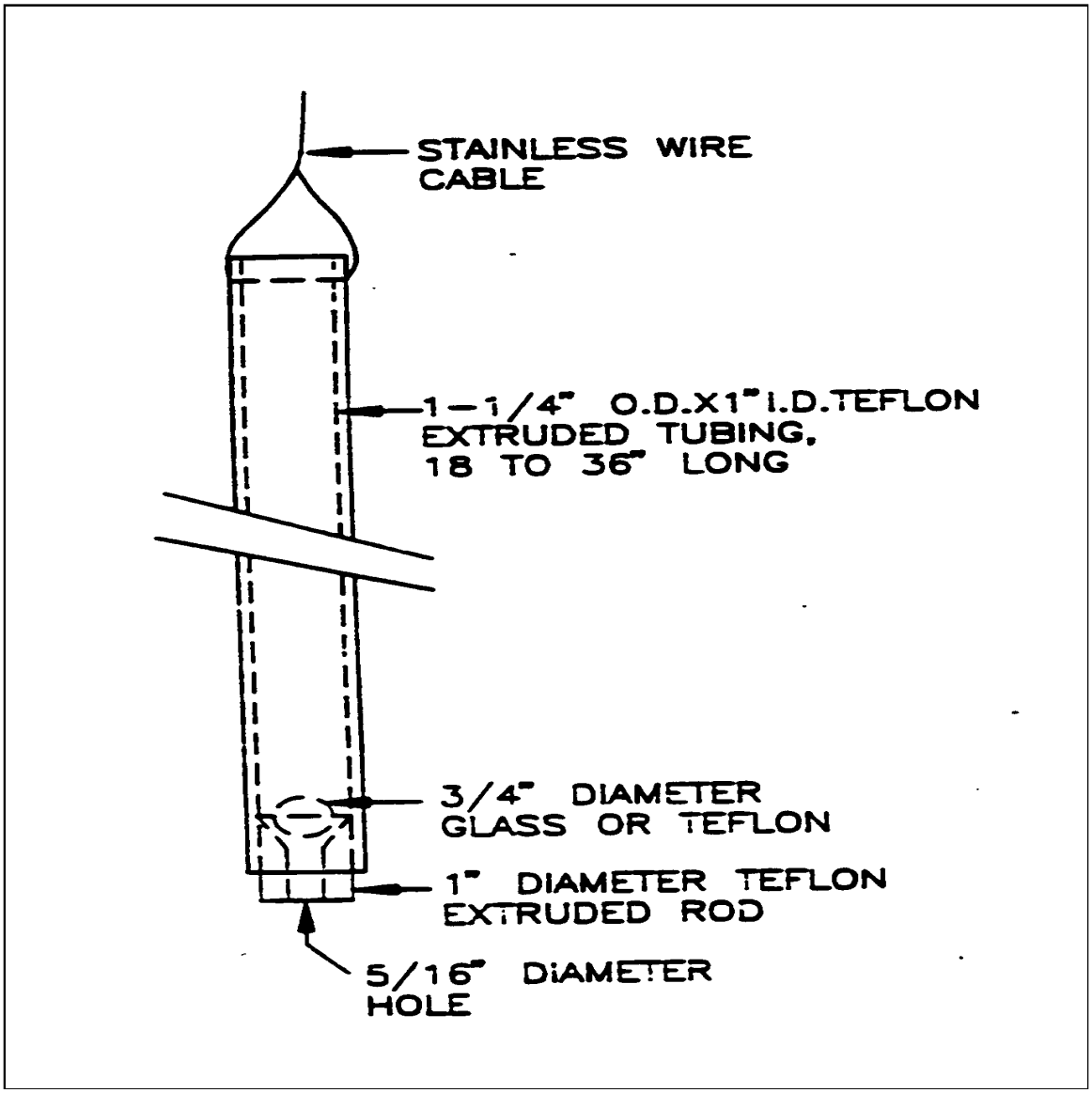

FIGURE 6. COLIWASA

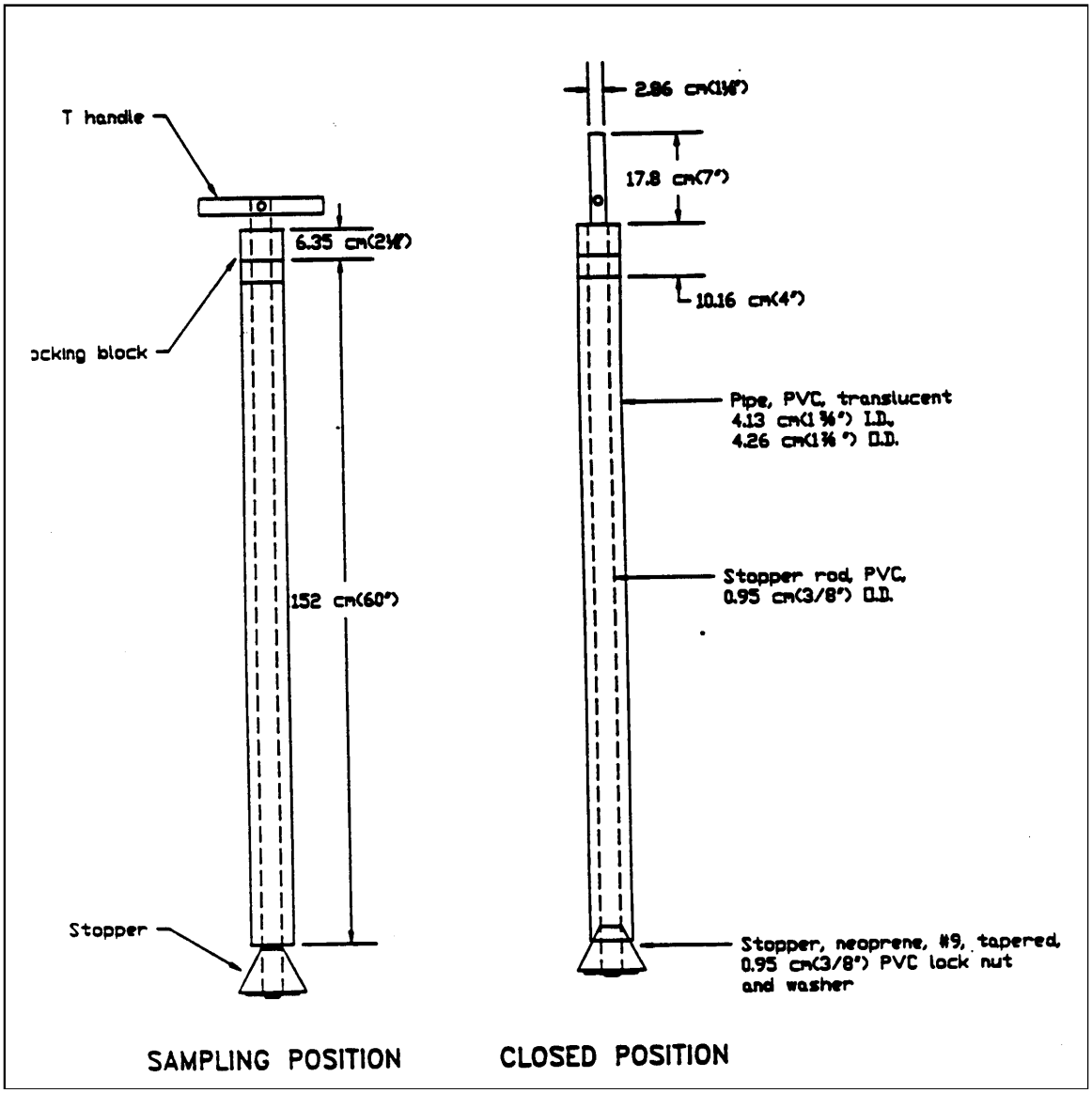

ATTACHMENT C

RCRA Hazardous Waste Characteristics Guidelines

Hazardous Waste Characteristics

A User-Friendly Reference Document

October 2009

Table of Contents

Introduction 3
Overview of the Hazardous Waste Identification Process 5
Characteristic Hazardous Wastes 5
Summary Chart 7
General Hazardous Waste Resources 8
Regulations for the Identification of Hazardous Waste 9
General Resources for Hazardous Waste Characteristics 12
Ignitability 12
Regulations for Ignitable Liquids 13
Regulations for Ignitable Solids 14
Regulations for Ignitable Compressed Gas 14
Related Resources for Ignitable Compressed Gas 15
Regulations for Oxidizers 15
Regulations for the Hazardous Waste Number for Ignitability 16
General Resources for the Ignitability Characteristic 17
Corrosivity 18
Regulations for Aqueous Solutions 18
Regulations for Steel Corrosivity 19
Regulations for the Hazardous Waste Number for Corrosivity 19
General Resources for the Corrosivity Characteristic 20
Reactivity 20
Regulations for Reactivity 20
Regulations for Reactivity with Water 21
Regulations for Cyanide/Sulfide Reactivity 21
Regulations for Explosives 21
Regulations for the Hazardous Waste Number for Reactivity 22
General Resources for the Reactivity Characteristic 24
Toxicity 24
Regulations for Toxicity 24
General Resources for the Toxicity Characteristic 26

Introduction

This document describes the Environmental Protection Agency's (EPA's) hazardous waste characteristics regulations under the authority of the Resource Conservation and Recovery Act (RCRA) Subtitle C[1] and includes hyperlinks to information that EPA has generated over the years to explain the characteristics regulations. The objective of this document is to consolidate the information on characteristics regulations to assist Environmental Protection Agency (EPA) staff, state staff, industrial facilities that generate and manage hazardous wastes, and the public to understand the current RCRA hazardous waste characteristics regulations. The criteria for identifying the characteristics of hazardous wastes are located in Title 40 of the Code of Federal Regulations (CFR) at Part 261. Please note that this reference document is designed to be web-based, so the usefulness of the document is maximized when it is viewed on a computer that is connected to the internet.

This document is only a reference document and is not to be used as a substitute for the CFR itself or the requirements contained in the CFR. This document is also not a rulemaking in any way. Additionally, this reference document presents only the federal requirements for hazardous waste characteristics. Most states are authorized to manage their hazardous waste management regulatory program. Therefore, states may have their own set of regulations that apply in lieu of federal regulations, and while most state hazardous waste regulations are based on the federal requirements, some states have developed regulations that are more stringent than the federal program. We direct you to the following website to determine if the state regulatory program is different from the federal program: http://www.epa.gov/epawaste/wyl/stateprograms.htm

This document is organized by hazardous waste characteristic (i.e., ignitable, corrosive, reactive and toxic), in a manner similar to the way the identification of hazardous waste regulations are presented in Title 40 of the Code of Federal Regulations (CFR) at Part 261. Therefore, following an overview of the hazardous waste characteristics regulations, this document will present the definition of hazardous waste, criteria for identifying hazardous waste, and the definitions of each of the four characteristics of hazardous waste. Background information and relevant resources are also provided throughout this document.

To help stakeholders better understand specific requirements, we also have provided, where applicable, hyperlinks to Federal Register notices, frequently asked questions (FAQs), letters, and memoranda issued by EPA, as well as guidance and other relevant documents developed by EPA that provide further clarification of the hazardous waste characteristic regulations. We have attempted to identify the relevant related FAQs, letters, memoranda, etc. on a particular subject (miscellaneous resources can also be found in this document). However, please note that it is possible that EPA could have inadvertently overlooked a relevant document and did not include it in this reference document. Therefore, we cannot guarantee that we captured every relevant document in each and every instance. Additionally, once a user has navigated to the characteristics regulation of interest, we have provided hyperlinks to the e-CFR website when the characteristics regulations cross-reference themselves or other regulations.

[1] Subtitle C of RCRA has been codified in the United States Code (U.S.C.) as the Solid Waste Disposal Act (SDWA), Subchapter III (Hazardous Waste Management), 42 U.S.C. §§ 6921 through 6939e

Because regulations are promulgated throughout the year, EPA intends to update this reference document periodically to remain up-to-date with the hazardous waste regulatory requirements. However, as noted previously, this web-based reference document is not a substitute for the CFR itself or the requirements in the CFR. Additionally, the Government Printing Office frequently updates the e-CFR website to which the document is linked. The hyperlinks included in this document for Federal Register notices published prior to October 1994 are from HeinOnline and are only available only by subscription to HeinOnline. By including this material, EPA does not endorse HeinOnline.

This reference document assumes that a solid waste has been generated. Therefore, we have not included the applicable regulatory citations for determining if a solid waste (See 40 CFR 261.2) has been generated. Similarly, we have not included the regulatory citations for specific exclusions from either the definition of solid waste and definition of hazardous waste found in 40 CFR 261.4, or the requirements for recyclable materials found in 40 CFR 261.6. Similar documents have been prepared compiling regulations applicable to generators of hazardous waste, "Hazardous Waste Generator Regulations: A User-Friendly Reference Document, May 2007," and the hazardous waste listings regulations, "Hazardous Waste Listings: A User-Friendly Reference Document, Draft, March 2008." Documents for Exclusions from the Definition of Solid Waste have also been developed, "Definition of Solid Waste Compendium - Volume A: Exclusions" and "Identification and Listing of Hazardous Waste 40 CFR § 261.4(b): Exclusions: Solid Wastes Which are not Hazardous Wastes." A collection of written materials about specific issues related to the definition of solid waste is available, "DSW Compendium."

This document was developed by the Materials Recovery and Waste Management Division in the Office of Resource Conservation and Recovery (formerly Office of Solid Waste). (Name change effective as per 74 FR 30228, June 25, 2009). Please direct any questions concerning this document to: helms.greg@epa.gov**.**

How to navigate this document

This document is navigable in several ways. First, generators can use the Summary Table to link directly to the regulatory citation of interest in the Government Printing Office's Electronic Code of Federal Register website (e-CFR) EXIT Disclaimer by left-clicking the mouse on the hyperlinks in the table. Clicking on the hyperlink will open the e-CFR in a new web-browser window, so the original document will also remain open. Secondly, users can take advantage of the Table of Contents (page 2 of the document) or the bookmarks (located on the left-hand side of the screen) to navigate through the body of the document. The Table of Contents and bookmarks are organized by hazardous waste characteristic. Users can navigate the document by clicking the left side of the mouse on the link of interest in the Table of Contents and bookmarks.

Overview of the Hazardous Waste Identification Process

EPA's regulations establish two ways of identifying solid wastes as hazardous under the Resource Conservation and Recovery Act RCRA. A waste may be considered hazardous if it exhibits certain hazardous properties ("characteristics") or if it is included on a specific list of wastes EPA has determined are hazardous ("listing" a waste as hazardous) because we found them to pose substantial present or potential hazards to human health or the environment. EPA's regulations in the Code of Federal Regulations (40 CFR) define four hazardous waste characteristic properties: ignitability, corrosivity, reactivity, or toxicity (see 40 CFR 261.21-261.24). This document presents the regulations that will assist in identifying the characteristics of hazardous waste in §§ 261.31 through 261.33. Since EPA has developed a separate document for listed wastes, only characteristic wastes will be discussed in this document.

Characteristic Hazardous Wastes

A RCRA characteristic hazardous waste is a solid waste that exhibits at least one of four characteristics defined in 40 CFR Part 261 subpart C — ignitability (D001), corrosivity (D002), reactivity (D003), and toxicity (D004 - D043).

- **Ignitability**– Ignitable wastes can create fires under certain conditions, are spontaneously combustible, or have a flash point less than 60 °C (140 °F). Examples include waste oils and used solvents. For more details, see 40 CFR §261.21. Test methods that may be used to determine ignitability include the Pensky-Martens Closed-Cup Method for Determining Ignitability (Method 1010A)(PDF)(1 pg, 19K), the Setaflash Closed-Cup Method for Determining Ignitability (Method 1020B)(PDF) (1 pg, 17K), the Ignitability of Solids (Method 1030) (PDF)(13 pp, 116K), Test Method for Oxidizing Solids (Method 1040)(PDF) (17 pp, 207K), and the Test Method to Determine Substances Likely to Spontaneously Combust (Method 1050) (PDF)(20 pp, 611K).

- **Corrosivity** – Corrosive wastes are acids or bases (pH less than or equal to 2, or greater than or equal to 12.5) and/or are capable of corroding metal containers, such as storage tanks, drums, and barrels. Battery acid is an example. For more details, see 40 CFR §261.22. The test method that may be used to determine the ability of a waste to corrode steel is the Corrosivity Towards Steel (Method 1110A)(PDF)(6 pp, 37K). To measure pH electrometrically, see Method 9040C (PDF)(5 pp, 25K).

- **Reactivity** – Reactive wastes are unstable under "normal" conditions. They can cause explosions, undergo violent reactions, generate toxic fumes, gases, or vapors or explosive mixtures when heated, compressed, or mixed with water. Examples include lithium-sulfur batteries and explosives. For more details, see 40 CFR §261.23 . There are currently no test methods available.

- **Toxicity** – Toxic wastes are harmful or fatal when ingested or absorbed (e.g., containing mercury, lead, etc.). When toxic wastes are land disposed, contaminated liquid may leach from the waste and pollute ground water. Toxicity is defined through a laboratory

procedure called the Toxicity Characteristic Leaching Procedure (TCLP) (Method 1311)(PDF)(35 pp, 288K). The TCLP helps identify wastes likely to leach concentrations of contaminants that may be harmful to human health or the environment. For more details, see 40 CFR §261.24.

Summary Chart

Links to specific sections of the CFR Citations for the Characteristics of Hazardous Waste

Title	Section
Definition of Hazardous Waste - General	40 CFR 261.3
Criteria for Identifying Characteristics of Hazardous Waste	40 CFR 261.10
Characteristics of Hazardous Waste - General	40 CFR 261.20
Characteristics of Ignitability	40 CFR 261.21
Characteristics of Corrosivity	40 CFR 261.22
Characteristics of Reactivity	40 CFR 261.23
Toxicity Characteristic	40 CFR 261.24
Hazardous waste determination	40 CFR 262.11

General Hazardous Waste Resources

- Electronic Code of Federal Regulations
  e-CFR: Title 40-Protection of Environment (Parts 260-265)

- Hazardous waste web page on the EPA website
  http://www.epa.gov/epawaste/hazard/index.htm

- RCRA training modules
  http://www.epa.gov/osw/inforesources/pubs/hotline/rmods.htm

- Training Document on Hazardous Waste Identification
  http://www.epa.gov/waste/inforesources/pubs/training/hwid05.pdf

- General Questions on Hazardous Waste and Characteristics
  What is a RCRA hazardous waste?

- Requirements for Generators of Hazardous Waste
  http://www.epa.gov/epawaste/hazard/generation/index.htm

- Website for RCRA Frequent Questions Database
  http://waste.custhelp.com/cgi-bin/waste.cfg/php/enduser/std_alp.php

- Environmental Justice
  Addressing Environmental Justice Issues In RCRA Programs

- Methods for Determining Characteristics of Hazardous Waste, SW-846, Chapter 8

Important Federal Register Notices for Characteristic Hazardous Waste

- Proposed Rule – Hazardous Waste Guidelines and Regulations
  43 FR 58946, December 18, 1978

- Final Rule and Interim Final Rule - Hazardous Waste Management System: General
  45 FR 33066, May 19, 1980

- Petroleum Refining Process Waste - Notice of Data Availability
  68 FR 59935, October 20, 2003

Regulations for the Identification of Hazardous Waste

This document is organized in a manner similar to the way the definition and identification of hazardous waste regulations are presented in Title 40 of the Code of Federal Regulations (CFR) at Part 261.

Title 40: Protection of Environment

PART 261 – Identification and Listing of Hazardous Waste

Subpart C

§ 261.3 Definition of hazardous waste

A solid waste, as defined in §261.2, is a hazardous waste if:

(i) It exhibits any of the characteristics of hazardous waste identified in subpart C of this part. However, any mixture of a waste from the extraction, beneficiation, and processing of ores and minerals excluded under §261.4(b)(7) and any other solid waste exhibiting a characteristic of hazardous waste under subpart C is a hazardous waste only if it exhibits a characteristic that would not have been exhibited by the excluded waste alone if such mixture had not occurred, or if it continues to exhibit any of the characteristics exhibited by the non-excluded wastes prior to mixture. Further, for the purposes of applying the Toxicity Characteristic to such mixtures, the mixture is also a hazardous waste if it exceeds the maximum concentration for any contaminant listed in Table 1 to §261.24 that would not have been exceeded by the excluded waste alone if the mixture had not occurred or if it continues to exceed the maximum concentration for any contaminant exceeded by the nonexempt waste prior to mixture.

§ 261.3(a)(2)(i)

(a) A solid waste, as defined in §261.2, is a hazardous waste if:

(1) It is not excluded from regulation as a hazardous waste under §261.4(b); and

(2) It meets any of the following criteria:

(i) It exhibits any of the characteristics of hazardous waste identified in subpart C of this part. However, any mixture of a waste from the extraction, beneficiation, and processing of ores and minerals excluded under §261.4(b)(7) and any other solid waste exhibiting a characteristic of hazardous waste under subpart C is a hazardous waste only if it exhibits a characteristic that would not have been exhibited by the excluded waste alone if such mixture had not occurred, or if it continues to exhibit any of the characteristics exhibited by the non-excluded wastes prior to mixture. Further, for the purposes of applying the Toxicity Characteristic to such mixtures, the mixture is also a hazardous waste if it exceeds the maximum concentration for any contaminant listed in table 1 to §261.24 that would not have been exceeded by the excluded waste alone if the

mixture had not occurred or if it continues to exceed the maximum concentration for any contaminant exceeded by the nonexempt waste prior to mixture.

§ 261.3(b)(3)

(b) A solid waste which is not excluded from regulation under paragraph (a)(1) of this section becomes a hazardous waste when any of the following events occur:

(1) In the case of a waste listed in subpart D of this part, when the waste first meets the listing description set forth in subpart D of this part.

(2) In the case of a mixture of solid waste and one or more listed hazardous wastes, when a hazardous waste listed in subpart D is first added to the solid waste.

(3) In the case of any other waste (including a waste mixture), when the waste exhibits any of the characteristics identified in subpart C of this part.

§ 261.3(c)(1)

(c) Unless and until it meets the criteria of paragraph (d) of this section:

(1) A hazardous waste will remain a hazardous waste.

§ 261.3(d)(1)

(d) Any solid waste described in paragraph (c) of this section is not a hazardous waste if it meets the following criteria:

(1) In the case of any solid waste, it does not exhibit any of the characteristics of hazardous waste identified in subpart C of this part. (However, wastes that exhibit a characteristic at the point of generation may still be subject to the requirements of part 268, even if they no longer exhibit a characteristic at the point of land disposal.)

[57 FR 7632, Mar. 3, 1992; 57 FR 23063, June 1, 1992, as amended at 57 FR 37263, Aug. 18, 1992; 57 FR 41611, Sept. 10, 1992; 57 FR 49279, Oct. 30, 1992; 59 FR 38545, July 28, 1994; 60 FR 7848, Feb. 9, 1995; 63 FR 28637, May 26, 1998; 63 FR 42184, Aug. 6, 1998; 66 FR 27297, May 16, 2001; 66 FR 50333, Oct. 3, 2001; 70 FR 34561, June 14, 2005; 70 FR 57784, Oct. 4, 2005; 71 FR 40258, July 14, 2006]

§ 261.10 Criteria for identifying the characteristics of hazardous waste

(a) The Administrator shall identify and define a characteristic of hazardous waste in subpart C only upon determining that:

(1) A solid waste that exhibits the characteristic may:

(i) Cause, or significantly contribute to, an increase in mortality or an increase in serious irreversible, or incapacitating reversible, illness; or

(ii) Pose a substantial present or potential hazard to human health or the environment when it is improperly treated, stored, transported, disposed of or otherwise managed; and

(2) The characteristic can be:

(i) Measured by an available standardized test method which is reasonably within the capability of generators of solid waste or private sector laboratories that are available to serve generators of solid waste; or

(ii) Reasonably detected by generators of solid waste through their knowledge of their waste.

(b) [Reserved]

PART 262 – Standards Applicable to Generators of Hazardous Waste

Subpart

§ 262.11 Hazardous waste determination

A person who generates a solid waste, as defined in 40 CFR 261.2, must determine if that waste is a hazardous waste using the following method:

(a) He should first determine if the waste is excluded from regulation under 40 CFR 261.4.

(b) He must then determine if the waste is listed as a hazardous waste in subpart D of 40 CFR part 261.

Note: Even if the waste is listed, the generator still has an opportunity under 40 CFR 260.22 to demonstrate to the Administrator that the waste from his particular facility or operation is not a hazardous waste.

(c) For purposes of compliance with 40 CFR part 268, or if the waste is not listed in subpart D of 40 CFR part 261, the generator must then determine whether the waste is identified in subpart C of 40 CFR part 261 by either:

(1) Testing the waste according to the methods set forth in subpart C of 40 CFR part 261, or according to an equivalent method approved by the Administrator under 40 CFR 260.21; or

(2) Applying knowledge of the hazard characteristic of the waste in light of the materials or the processes used.

(d) If the waste is determined to be hazardous, the generator must refer to parts 261, 264, 265, 266, 268, and 273 of this chapter for possible exclusions or restrictions pertaining to management of the specific waste.

[45 FR 33142, May 19, 1980, as amended at 45 FR 76624, Nov. 19, 1980; 51 FR 40637, Nov. 7, 1986; 55 FR 22684, June 1, 1990; 56 FR 3877, Jan. 31, 1991; 60 FR 25541, May 11, 1995]

General Resources for Hazardous Waste Characteristics

Representative Sampling

Appendix I to Part 261—Representative Sampling Methods

The methods and equipment used for sampling waste materials will vary with the form and consistency of the waste materials to be sampled. Samples collected using the sampling protocols listed below, for sampling waste with properties similar to the indicated materials, will be considered by the Agency to be representative of the waste.

[45 FR 33119, May 19, 1980, as amended at 70 FR 34562, June 14, 2005]

Sampling Plan

Test Methods for Evaluating Solid Waste, Physical/Chemical Methods (SW-846) - Sampling Plan

Federal Register Notices

- Final Rule and Interim Final Rule - Hazardous Waste Management System: General
  45 FR 33066, May 19, 1980

- Petroleum Refining Process Wastes - Notice of Data Availability
  68 FR 59935, October 20, 2003

Letters/Memoranda

- REGULATORY STATUS OF USED NICKEL CATALYST

- STATUS OF SPENT SILVER-BEARING PHOTOFIXER THAT IS RECLAIMED

- BIOSOLIDS

Ignitability

The regulations for the hazardous characteristic of ignitability can be found at 40 CFR 261.21.

Regulations for Ignitable Liquids

§ 261.21

(a) A solid waste exhibits the characteristic of ignitability if a representative sample of the waste has any of the following properties:

(1) It is a liquid, other than an aqueous solution containing less than 24 percent alcohol by volume and has flash point less than 60 °C (140 °F), as determined by a Pensky-Martens Closed Cup Tester (incorporated by reference, see §260.11), or a Setaflash Closed Cup Tester, using the test method specified in ASTM Standard D 3278–78 (incorporated by reference, see §260.11).

Letters/Memoranda

- DETERMINATION OF THE IGNITABILITY CHARACTERISTIC
- USE OF PAINT FILTER LIQUIDS TEST TO DETERMINE FREE LIQUIDS IN A WASTE
- MIXTURES OF USED OIL AND CHARACTERISTIC HAZARDOUS WASTE
- USE OF ASTM METHOD D-56 IN IGNITABILITY DETERMINATIONS
- POSITION PAPER ON SPENT ABSORBENT MATERIALS
- DEFINING IGNITABLE LIQUIDS METHOD
- RESPONSE TO SPECIFIC QUESTIONS REGARDING HAZARDOUS WASTE IDENTIFICATION AND GENERATOR REGULATIONS
- ALCOHOL-CONTENT EXCLUSION FOR THE IGNITABILITY CHARACTERISTIC
- CLARIFICATION ON: MANIFEST DOCUMENT NUMBER; F003, F005, D001; WASTE DESTINED FOR RECYCLING; AND TREATMENT STANDARDS FOR CFC
- PRETREATMENT OF CHARACTERISTIC WASTES SUBJECT TO LAND DISPOSAL RESTRICTIONS
- AQUEOUS SOLUTION, IGNITABILITY DEFINED
- AQUEOUS WASTE AS IGNITABLE
- LIQUID WASTE, DEFINITION OF
- CLARIFICATION OF THE RECYCLED USED OIL MANAGEMENT STANDARDS AS THEY PERTAIN TO IGNITABLE USED OIL
- CLARIFICATION OF THE USED OIL REGULATIONS APPLICABLE TO MIXTURES OF USED OIL AND CHARACTERISTIC WASTE
- DEFINITION OF A LIQUID AS IT APPLIES TO IGNITABLE AND CORROSIVE WASTES; LIQUID AS IT APPLIES TO IGNITABLE OR CORROSIVE WASTES

- IGNITABILITY OR CORROSIVITY TESTING-LIQUID AND AQUEOUS DEFINITION
- FLASH POINT TESTS AND THE IGNITABILITY CHARACTERISTIC
- DEFINITION OF AQUEOUS

Regulations for Ignitable Solids

§ **261.21(a)**
(2) It is not a liquid and is capable, under standard temperature and pressure, of causing fire through friction, absorption of moisture or spontaneous chemical changes and, when ignited, burns so vigorously and persistently that it creates a hazard.

Letters/Memoranda

- FLASH POINT TESTING OF A WASTE FIBROUS FILTER MATERIAL
- INDUSTRIAL WIPERS AND THE HAZARDOUS WASTE IDENTIFICATION RULE
- HOW IGNITABLE SOLIDS AND SOLVENT CONTAMINATED RAGS OR SHOP TOWELS FIT INTO D001 CHARACTERISTIC OF IGNITABILITY
- INTERPRETATION OF THE RCRA IGNITABILITY CHARACTERISTIC WITH REGARD TO ACETONE WIPES
- CHARACTERIZATION OF NITROCELLULOSE FILTER FABRIC WASTE
- REGULATORY STATUS OF METAL CASINGS CONTAINING SPENT POWDERED METALLIC OXIDE CATALYST
- DETERMINATION OF THE IGNITABILITY CHARACTERISTIC
- IGNITABLE SOLID DEFINITION APPLIED TO TITANIUM SWARF
- IGNITABILITY CHARACTERISTIC TESTING FOR SOLIDS
- CLARIFICATION OF THE CHARACTERISTIC OF IGNITABILITY AS IT PERTAINS TO SOLIDS VS. LIQUIDS
- IGNITABILITY CHARACTERISTIC, DEFINITION OF UNDER STANDARD TEMPERATURE AND PRESSURE

Regulations for Ignitable Compressed Gas

§ **261.21(a)**
(3) It is an ignitable compressed gas.

(i) The term “compressed gas” shall designate any material or mixture having in the container an absolute pressure exceeding 40 p.s.i. at 70 °F or, regardless of the pressure at 70 °F, having an absolute pressure exceeding 104 p.s.i. at 130 °F; or any liquid flammable material having a vapor pressure exceeding 40 p.s.i. absolute at 100 °F as determined by ASTM Test D–323.

(ii) A compressed gas shall be characterized as ignitable if any one of the following occurs:

(A) Either a mixture of 13 percent or less (by volume) with air forms a flammable mixture or the flammable range with air is wider than 12 percent regardless of the lower limit. These limits shall be determined at atmospheric temperature and pressure. The method of sampling and test procedure shall be acceptable to the Bureau of Explosives and approved by the director, Pipeline and Hazardous Materials Technology, U.S. Department of Transportation (see Note 2).

(B) Using the Bureau of Explosives' Flame Projection Apparatus (see Note 1), the flame projects more than 18 inches beyond the ignition source with valve opened fully, or, the flame flashes back and burns at the valve with any degree of valve opening.

(C) Using the Bureau of Explosives' Open Drum Apparatus (see Note 1), there is any significant propagation of flame away from the ignition source.

(D) Using the Bureau of Explosives' Closed Drum Apparatus (see Note 1), there is any explosion of the vapor-air mixture in the drum.

Letters/Memoranda

- INCINERATORS THAT RECEIVE GASEOUS EMISSIONS, RCRA EXCLUSION, CAA APPLIES

Regulations for Oxidizers

§ 261.21(a)
(4) It is an oxidizer. An oxidizer for the purpose of this subchapter is a substance such as a chlorate, permanganate, inorganic peroxide, or a nitrate, that yields oxygen readily to stimulate the combustion of organic matter (see Note 4).

(i) An organic compound containing the bivalent -O-O- structure and which may be considered a derivative of hydrogen peroxide where one or more of the hydrogen atoms have been replaced by organic radicals must be classed as an organic peroxide unless:

(A) The material meets the definition of a Class A explosive or a Class B explosive, as defined in §261.23(a)(8), in which case it must be classed as an explosive,

(B) The material is forbidden to be offered for transportation according to 49 CFR 172.101 and 49 CFR 173.21,

(C) It is determined that the predominant hazard of the material containing an organic peroxide is other than that of an organic peroxide, or

(D) According to data on file with the Pipeline and Hazardous Materials Safety Administration in the U.S. Department of Transportation (see Note 3), it has been determined that the material does not present a hazard in transportation.

Letters/Memoranda

- APPLICABILITY OF HAZARDOUS WASTE CODES TO A CHEMICAL POLISHING SYSTEM
- RCRA APPLICABILITY TO POTASSIUM PERMANGANATE AND MANGANESE DISPOSAL
- NITRIC ACID WASTE CHARACTERIZATION
- REGULATORY STATUS OF METAL CASINGS CONTAINING SPENT POWDERED METALLIC OXIDE CATALYST

Regulations for the Hazardous Waste Number for Ignitability

§ 261.21
(b) A solid waste that exhibits the characteristic of ignitability has the EPA Hazardous Waste Number of D001.

Note 1: A description of the Bureau of Explosives' Flame Projection Apparatus, Open Drum Apparatus, Closed Drum Apparatus, and method of tests may be procured from the Bureau of Explosives.

Note 2: As part of a U.S. Department of Transportation (DOT) reorganization, the Office of Hazardous Materials Technology (OHMT), which was the office listed in the 1980 publication of 49 CFR 173.300 for the purposes of approving sampling and test procedures for a flammable gas, ceased operations on February 20, 2005. OHMT programs have moved to the Pipeline and Hazardous Materials Safety Administration (PHMSA) in the DOT.

Note 3: As part of a U.S. Department of Transportation (DOT) reorganization, the Research and Special Programs Administration (RSPA), which was the office listed in the 1980 publication of 49 CFR 173.151a for the purposes of determining that a material does not present a hazard in transport, ceased operations on February 20, 2005. RSPA programs have moved to the Pipeline and Hazardous Materials Safety Administration (PHMSA) in the DOT.

Note 4: The DOT regulatory definition of an oxidizer was contained in §173.151 of 49 CFR, and the definition of an organic peroxide was contained in paragraph 173.151a. An organic peroxide is a type of oxidizer.

[45 FR 33119, May 19, 1980, as amended at 46 FR 35247, July 7, 1981; 55 FR 22684, June 1, 1990; 70 FR 34561, June 14, 2005; 71 FR 40259, July 14, 2006]

Letters/Memoranda

- PRETREATMENT OF CHARACTERISTIC WASTES SUBJECT TO LAND DISPOSAL RESTRICTIONS
- REGULATORY REQUIREMENTS APPLICABLE TO TWO WASTE STREAMS THAT WOULD BE BILAYERED THROUGH PHASE SEPARATION AT A LICENSED TSDF
- SOLVENT-CONTAMINATED WASTEWATER FROM FRAGRANCE MANUFACTURE
- END-USERS OF CHLORDIMEFORM EXEMPTION
- MIXTURE OF METHANOL AND SOLID WASTE WHICH DOES NOT EXHIBIT ANY CHARACTERISTICS

General Resources for the Ignitability Characteristic

- Background document for the Ignitability characteristic

Test Methods

Test methods are not required by the Federal regulations to determine if a waste passes or fails the characteristic of ignitability according to the RCRA regulatory definition at 40 CFR 261.21. To clarify, the test results of these methods cannot be used to directly classify a waste as a D001 hazardous waste, nor can the results be used by themselves to definitively classify a waste as non-hazardous. No specific test for defining ignitable solids or oxidizers is required by the RCRA regulations, and only a waste meeting the narrative regulatory definitions at 40 CFR 261.21(a)(2) and/or 261.21(a)(4) is an ignitable hazardous waste because it is an ignitable solid and/or an oxidizer. However, these test methods were developed to specifically illustrate the ignitable and oxidizer properties of materials, including wastes, and their results provide relevant and useful information that may be applied to knowledge of a waste in determining whether a waste meets the 40 CFR 261.21(a) criteria.

- SW-846 Test Method for Ignitability of Solids – Test Method 1030
- SW-846 Test Method for Oxidizing Solids – Test Method 1040
- SW-846 Test Method to Determine Substances Likely to Spontaneously Combust - Test Method 1050
- Test Methods for Evaluating Solid Waste, Physical/Chemical Methods (SW-846) – ***Sampling Plan***

Federal Register Notices

- Proposed Rule – Hazardous Waste Guidelines and Regulations: 43 FR 58946, December 18, 1978

- Final Rule - Land Disposal Restrictions for Third Third Scheduled Wastes 55 FR 22520, June 1, 1990

- Proposed Rule – Hazardous Waste Management System; Testing and Monitoring Activities: 58 FR 46052, August 31, 1993

- Proposed Rule – Land Disposal Restrictions Phase IV: Treatment Standards for Wood Preserving Wastes, Exemptions from RCRA for Certain Processed Materials/Mineral Processing and Bevill Exclusion Issues and the Use of Hazardous Waste as Fill: 62 FR 25997, May 12, 1997

- Proposed Rule – Hazardous Waste Management System; Testing and Monitoring Activities: 58 FR 46052, August 31, 1993

Corrosivity

The regulations for the hazardous characteristic of corrosivity can be found at 40 CFR 261.22.

Regulations for Aqueous Solutions

§ 261.21

(a) A solid waste exhibits the characteristic of corrosivity if a representative sample of the waste has either of the following properties:

(1) It is aqueous and has a pH less than or equal to 2 or greater than or equal to 12.5, as determined by a pH meter using Method 9040C in "Test Methods for Evaluating Solid Waste, Physical/Chemical Methods," EPA Publication SW–846, as incorporated by reference in §260.11 of this chapter.

Federal Register Notice

- Final Rule: Hazardous Waste Management System: Testing and Monitoring Activities (Evaluating Aqueousness) 60 FR 3089, January 13, 1995

Letters/Memoranda

- INTERPRETATION OF "AQUEOUS" AS APPLIED TO THE CORROSIVITY CHARACTERISTIC

- "AQUEOUS" AS APPLIED TO THE CORROSIVITY CHARACTERISTIC

- USE OF PAINT FILTER LIQUIDS TEST TO DETERMINE FREE LIQUIDS IN A WASTE
- CORROSIVE CHARACTERISTIC APPLIED TO LIQUID AND AQUEOUS WASTES
- IGNITABILITY OR CORROSIVITY TESTING-LIQUID AND AQUEOUS DEFINITION
- APPLICABILITY OF CORROSIVITY PH AND STEEL CORROSION TESTS
- DEFINITION OF A LIQUID AS IT APPLIES TO IGNITABLE AND CORROSIVE WASTES; LIQUID AS IT APPLIES TO IGNITABLE OR CORROSIVE WASTES
- PH MEASUREMENT ON PARTIAL SOLIDS

Regulations for Steel Corrosivity

§ 261.22(a)
(2) It is a liquid and corrodes steel (SAE 1020) at a rate greater than 6.35 mm (0.250 inch) per year at a test temperature of 55 °C (130 °F) as determined by Method 1010A in "Test Methods for Evaluating Solid Waste, Physical/Chemical Methods," EPA Publication SW–846, and as incorporated by reference in §260.11 of this chapter.

Letters/Memoranda

- SW-846 TEST METHODS
- AGITATE SAMPLES EVALUATED USING METHOD 1110
- SPENT PICKLE LIQUOR CORROSIVITY

Regulations for the Hazardous Waste Number for Corrosivity

§ 261.22
(b) A solid waste that exhibits the characteristic of corrosivity has the EPA Hazardous Waste Number of D002.

[45 FR 33119, May 19, 1980, as amended at 46 FR 35247, July 7, 1981; 55 FR 22684, June 1, 1990; 58 FR 46049, Aug. 31, 1993; 70 FR 34561, June 14, 2005]

Letters/Memoranda

- CORROSIVITY CHARACTERISTIC AS IT APPLIES TO SOLIDS
- LAND DISPOSAL RESTRICTION INTERIM FINAL RULE
- PRECIPITATION WHICH IS CORROSIVE DUE TO CONTACT WITH EXEMPT WASTES (COAL GASIFICATION ASH)

- NITRIC ACID WASTE CHARACTERIZATION
- ELEMENTARY NEUTRALIZATION UNITS GENERATING AND STORING NON-CORROSIVE HAZARDOUS WASTES
- POLLUTION CONTROL SLUDGE FROM TREATMENT OF MINING WASTE - EXCLUSION
- CEMENT KILN DUST WASTE
- BATTERIES, WASTE ELECTROLYTE FROM RECHARGEABLE NICKEL-CADMIUM
- BATTERIES, SCRAP METAL, AND PRECIOUS METALS
- FOOD PROCESSORS, IMPACT OF HAZARDOUS WASTE REGULATIONS ON
- LIQUID, FREE LIQUID, RELEASABLE LIQUID DEFINITIONS
- REGULATORY STATUS OF LABORATORY WASTEWATER

General Resources for the Corrosivity Characteristic

- Background document for the Corrosivity Characteristic
- "Determination of Water in Waste Materials by Karl Fisher Titration." – Method 9000
- Test Methods for Evaluating Solid Waste, Physical/Chemical Methods (SW-846) - *Sampling Plan*
- Determination of Water in Waste Materials by Quantitative Calcium Hydride Reaction; Method 9001
- Corrosivity Definition of Aqueous

Reactivity

The regulations for the hazardous characteristic of reactivity can be found at 40 CFR 261.23.

Regulations for Reactivity

§ 261.23
(a) A solid waste exhibits the characteristic of reactivity if a representative sample of the waste has any of the following properties:

(1) It is normally unstable and readily undergoes violent change without detonating.

Regulations for Reactivity with Water

§ **261.23(a)**
(2) It reacts violently with water.

(3) It forms potentially explosive mixtures with water.

(4) When mixed with water, it generates toxic gases, vapors or fumes in a quantity sufficient to present a danger to human health or the environment.

Letters/Memoranda

- CHEMICAL AGENTS GB, VX, AND HD AT MUNITIONS DISPOSAL FACILITY
- REGULATION AND DISPOSAL REQUIREMENTS FOR SODIUM AZIDE

Regulations for Cyanide/Sulfide Reactivity

§ **261.23(a)**
(5) It is a cyanide or sulfide bearing waste which, when exposed to pH conditions between 2 and 12.5, can generate toxic gases, vapors or fumes in a quantity sufficient to present a danger to human health or the environment.

Letters/Memoranda

- WITHDRAWAL OF CYANIDE AND SULFIDE GUIDANCE
- HAZARDOUS WASTE TESTING ISSUES

Regulations for Explosives

§ **261.23(a)**
(6) It is capable of detonation or explosive reaction if it is subjected to a strong initiating source or if heated under confinement.

(7) It is readily capable of detonation or explosive decomposition or reaction at standard temperature and pressure.

(8) It is a forbidden explosive as defined in 49 CFR 173.51, or a Class A explosive as defined in 49 CFR 173.53 or a Class B explosive as defined in 49 CFR 173.88.

Letters/Memoranda

- TRANSPORTATION AND DISPOSAL OF SHOCK SENSITIVE OR EXPLOSIVE MATERIALS
- DOT REGULATIONS REFERENCED IN THE RCRA REGULATIONS
- REGULATORY ISSUES PERTAINING TO WASTES CONTAMINATED WITH EXPLOSIVE RESIDUES
- REACTIVE WASTE - EXPLOSIVITY

Regulations for the Hazardous Waste Number for Reactivity

§ 261.23
(b) A solid waste that exhibits the characteristic of reactivity has the EPA Hazardous Waste Number of D003.

[45 FR 33119, May 19, 1980, as amended at 55 FR 22684, June 1, 1990]

Letters/Memoranda

Aerosols

- BUBBLER CANISTERS CONTAINING PHOSPHOROUS OXYCHLORIDE ARE NOT WASTE WHEN RETURNED TO THE UNITED STATES FROM JAPAN FOR REGENERATION
- REGULATORY STATUS OF WASTE AEROSOL CANS
- CLARIFICATION OF REACTIVITY CHARACTERISTIC AS IT PERTAINS TO AEROSOL CANS
- REGULATORY STATUS OF USED RESIDENTIAL AND COMMERCIAL/INDUSTRIAL AEROSOL CANS

Ammunition

- REGULATORY STATUS OF METAL CASINGS CONTAINING SPENT POWDERED METALLIC OXIDE CATALYST
- SMALL ARMS AMMUNITION REACTIVITY, OFF SPECIFICATION
- CLARIFICATION OF DISCARDED AMMUNITION OF 0.50 CALIBER

Batteries

- REACTIVE CHARACTERISTICS OF DISCHARGED LI/SO2 BATTERIES
- REGULATORY STATUS OF SPENT/DISCARDED LITHIUM-SULFUR DIOXIDE BATTERIES
- WASTE CHARACTERIZATION: LITHIUM BATTERIES
- REGULATORY STATUS OF BATTERIES

Flameless Ration Heaters

- CLASSIFICATION AND DISPOSAL OF UNUSED FLAMELESS RATION HEATERS
- APPLICABILITY OF RCRA TO DISPOSAL OF UNIFIED GROUP RATION - EXPRESS (UGR-E)
- STATUS OF WASTE HYDROGEN FREE RATION HEATERS (HRHs)

Explosives

- BLASTING CAPS AS REACTIVE WASTES
- DETONATING EXPLOSIVE WASTES
- DISCARDED CLASS C EXPLOSIVES

General

- LEAKS, SPILLS, AND ILLEGAL DISCHARGES OF LISTED WASTES TO SURFACE WATERS, MIXTURE RULE APPLIED TO
- REGULATORY STATUS OF UNIT AND WASTE IF NONHAZARDOUS WASTE BECOMES REACTIVE WHEN DEWATERED
- RCRA HAZARDOUS WASTE DETERMINATION OF SPENT NUCLEAR REACTOR FUELS
- APPLICABILITY OF 40 CFR 261.5 TO K047
- DREDGE SEDIMENTS (See Note 5)

Note 5:

§261.4(g) Exclusions

(g) *Dredged material that is not a hazardous waste*. Dredged material that is subject to the requirements of a permit that has been issued under 404 of the Federal Water Pollution Control Act (33 U.S.C.1344) or section 103 of the Marine Protection, Research, and Sanctuaries Act of 1972 (33 U.S.C. 1413) is not a hazardous waste. For this paragraph (g), the following definitions apply:

(1) The term *dredged material* has the same meaning as defined in 40 CFR 232.2;

[45 FR 33119, May 19, 1980]

Federal Register Notice

- Military Munitions Rule
  62 FR 6622, February 12, 1997

General Resources for the Reactivity Characteristic

- Background document for the Reactivity characteristic

Toxicity

The regulations for the hazardous characteristic of toxicity can be found at 40 CFR 261.24.

Regulations for Toxicity

§261.24

(a) A solid waste (except manufactured gas plant waste) exhibits the characteristic of toxicity if, using the Toxicity Characteristic Leaching Procedure, test Method 1311 in "Test Methods for Evaluating Solid Waste, Physical/Chemical Methods," EPA Publication SW–846, as incorporated by reference in §260.11 of this chapter, the extract from a representative sample of the waste contains any of the contaminants listed in table 1 at the concentration equal to or greater than the respective value given in that table. Where the waste contains less than 0.5 percent filterable solids, the waste itself, after filtering using the methodology outlined in Method 1311, is considered to be the extract for the purpose of this section.

(b) A solid waste that exhibits the characteristic of toxicity has the EPA Hazardous Waste Number specified in Table 1 which corresponds to the toxic contaminant causing it to be hazardous.

Table 1 —Maximum Concentration of Contaminants for the Toxicity Characteristic

EPA HW No.[1]	Contaminant	CAS No.[2]	Regulatory Level (mg/L)
D004	Arsenic	7440–38–2	5.0
D005	Barium	7440–39–3	100.0
D018	Benzene	71–43–2	0.5
D006	Cadmium	7440–43–9	1.0
D019	Carbon tetrachloride	56–23–5	0.5
D020	Chlordane	57–74–9	0.03
D021	Chlorobenzene	108–90–7	100.0
D022	Chloroform	67–66–3	6.0

D007	Chromium	7440–47–3	5.0
D023	o-Cresol	95–48–7	[4]200.0
D024	m-Cresol	108–39–4	[4]200.0
D025	p-Cresol	106–44–5	[4]200.0
D026	Cresol		[4]200.0
D016	2,4-D	94–75–7	10.0
D027	1,4-Dichlorobenzene	106–46–7	7.5
D028	1,2-Dichloroethane	107–06–2	0.5
D029	1,1-Dichloroethylene	75–35–4	0.7
D030	2,4-Dinitrotoluene	121–14–2	[3]0.13
D012	Endrin	72–20–8	0.02
D031	Heptachlor (and its epoxide)	76–44–8	0.008
D032	Hexachlorobenzene	118–74–1	[3]0.13
D033	Hexachlorobutadiene	87–68–3	0.5
D034	Hexachloroethane	67–72–1	3.0
D008	Lead	7439–92–1	5.0
D013	Lindane	58–89–9	0.4
D009	Mercury	7439–97–6	0.2
D014	Methoxychlor	72–43–5	10.0
D035	Methyl ethyl ketone	78–93–3	200.0
D036	Nitrobenzene	98–95–3	2.0
D037	Pentrachlorophenol	87–86–5	100.0
D038	Pyridine	110–86–1	[3]5.0
D010	Selenium	7782–49–2	1.0
D011	Silver	7440–22–4	5.0
D039	Tetrachloroethylene	127–18–4	0.7
D015	Toxaphene	8001–35–2	0.5
D040	Trichloroethylene	79–01–6	0.5
D041	2,4,5-Trichlorophenol	95–95–4	400.0
D042	2,4,6-Trichlorophenol	88–06–2	2.0

D017	2,4,5-TP (Silvex)	93–72–1	1.0
D043	Vinyl chloride	75–01–4	0.2

[1]Hazardous waste number.
[2]Chemical abstracts service number.
[3]Quantitation limit is greater than the calculated regulatory level. The quantitation limit therefore becomes the regulatory level.
[4]If o-, m-, and p-Cresol concentrations cannot be differentiated, the total cresol (D026) concentration is used. The regulatory level of total cresol is 200 mg/l.
[55 FR 11862, Mar. 29, 1990, as amended at 55 FR 22684, June 1, 1990; 55 FR 26987, June 29, 1990; 58 FR 46049, Aug. 31, 1993; 67 FR 11254, Mar. 13, 2002; 71 FR 40259, July 14, 2006]

General Resources for the Toxicity Characteristic

- Methods for Determining Characteristics of Hazardous Waste, SW-846, Chapter 8

Federal Register Notices

- Final Rule: Toxicity Characteristic
  55 FR 11829: March 29, 1,90

- Proposed Rule: Hazardous Waste Management System; Modification of the Hazardous Waste Recycling Regulatory Program
  58 FR 8102, February 11, 1993

- Request for Comment on Proposed Statement of Policy Regarding Spent Antifreeze
  63 FR 20187, April 23, 1998

Letters/Memoranda

Antifreeze

- USED AUTOMOBILE ANTIFREEZE DISPOSAL

- SPENT ANTI-FREEZE COOLANT REGULATORY STATUS

- SPENT ANTIFREEZE AND THE TOXICITY CHARACTERISTIC

Biosolids

- BIOSOLIDS

Chromium/Trivalent Chromium

- HAZARDOUS WASTE TESTING ISSUES

- RULEMAKING PETITION FOR TRIVALENT CHROMIUM EXCLUSION
- PETITION PROCESS FOR THE TRIVALENT CHROMIUM EXCLUSION
- TOTAL CHROMIUM ANALYSIS

Chromated Copper Arsenate (CCA) Treated Wood

- CCA TREATED WOOD WHEN DISPOSED
- WOOD MULCH DERIVED FROM WASTE LUMBER PRESERVED WITH CHROMATED COPPER ARSENATE (CCA)
- RECOMMENDATION ON THE DISPOSAL OF WASTE LUMBER PRESERVED WITH CHROMATED COPPER ARSENATE (CCA)
- CURRENT STATUS OF CCA-TREATED WOOD UNDER RCRA

Explosive Waste/Military Munitions

- APPLICABILITY OF THE TCLP TO WASTE MUNITIONS
- TCLP PARTICLE SIZE REDUCTION EXEMPTION FOR MUNITIONS
- COMBUSTION PROHIBITION AND EXPLOSIVE WASTES

Lead/Lead-Based Paint

- LEADED PAINT SANDBLASTING WASTE TESTING USING TCLP
- TCLP AND LEAD PAINT REMOVAL DEBRIS
- LEAD PAINT REMOVAL DEBRIS AND THE TCLP PROCEDURE
- RCRA APPLICABILITY TO PAINT REMOVAL WASTES
- INCORPORATION OF PRETOX 2000 INTO LEADED PAINT STRIPPER
- RECYCLING OF MOLDING AND CASTING SANDS
- LEACH TESTING PROCEDURE TO REMOVE LEAD-CONTAMINATED SOILS FROM RESIDENTIAL AREAS
- MANAGEMENT AND DISPOSAL OF WASTE VINYL MINI BLINDS
- PROPOSED TSCA 403 SOIL LEAD HAZARD AND OSWER'S LEAD-IN-SOILS POLICY

Manufactured Gas Plant (MGP)

- IMPLEMENTATION OF VACATURE OF TCLP USE FOR EVALUATING MANUFACTURED GAS PLANT (MGP) WASTES IN THE BATTERY RECYCLERS CASE
- MANUFACTURED GAS PLANT (MGP) REMEDIATION WASTE

Mercury/Mercury Lamps

- MANAGEMENT OF USED FLUORESCENT LAMPS
- STATUS OF FLUORESCENT LAMPS UNDER RCRA
- DETERMINATION ON WHETHER A GENERATOR'S FLUORESCENT TUBES ARE NONHAZARDOUS
- MANAGEMENT OF USED FLUORESCENT LAMPS
- MERCURY DRY CELL BATTERIES AND APPLICABLE REGULATIONS
- WASTE IDENTIFICATION OF DISCARDED THERMOMETERS

Municipal Waste Combustion Ash

- SAMPLING AND ANALYSIS OF MUNICIPAL REFUSE INCINERATOR ASH; Draft 05/15/1994
- GUIDANCE FOR THE SAMPLING AND ANALYSIS OF MUNICIPAL WASTE COMBUSTION ASH FOR THE TOXICITY CHARACTERISTIC; June 1995
- STATUS OF MUNICIPAL WASTE COMBUSTION ASH
- RESIDUES FROM MUNICIPAL WASTE RESOURCE RECOVERY FACILITIES; MUNICIPAL WASTE COMBUSTION RESIDUES-ASH AND SLUDGE
- MUNICIPAL WASTE COMBUSTION, DISPOSAL OF RESIDUAL ASH

Oily Waste/Used Oil

- USED OIL FILTERS CLASSIFICATION
- TC RULE RELATIONSHIP TO USED OIL FILTER DISPOSAL
- APPLICABILITY OF THE TOXICITY CHARACTERISTIC TO USED OIL FILTERS
- TC RULE DELAY OF IMPOSITION ON OIL FILTERS
- TCLP EXTRACTIONS APPLIED TO LIQUID WASTES, OILS AND SOLVENT-BASED PRODUCTS
- TCLP EXTRACTIONS AS THEY APPLY TO OILY WASTE
- QUESTIONS ON FINAL USED OIL RULE
- DILUTION OF TEST SAMPLING
- USED OIL USED FOR DUST SUPPRESSION OR ROAD TREATMENT
- CLARIFICATION OF THE USED OIL REGULATIONS APPLICABLE TO MIXTURES OF USED OIL AND CHARACTERISTIC WASTE

- REGULATORY REQUIREMENTS PERTAINING TO THE MANAGEMENT OF WASTE SOLVENTS AND USED OIL

Toxicity Characteristic Leaching Procedure (TCLP)

- SAMPLE HOLDING TIMES AND VALIDITY OF ANALYTICAL RESULTS
- DILUTION OF TEST SAMPLING
- EXEMPTION FROM PARTICLE SIZE REDUCTION STEP IN TCLP
- MATRIX SPIKE IN TCLP PROCEDURE
- ANALYSIS OF FLUFF MATERIALS
- GENERATOR HAZARDOUS WASTE DETERMINATION AND THE TCLP
- APPLICABILITY OF THE TCLP
- APPLICABILITY OF THE TOXICITY CHARACTERISTIC AND THE TCLP
- BIAS CORRECTION APPLIED TO THE TCLP
- TC RULE HAZARDOUS WASTE DETERMINATION
- SEMI-VOLATILE CONSTITUENT ANALYSIS AND ANALYTICAL LEVEL OF DETECTION LIMITATIONS OF THE TOXICITY CHARACTERISTIC LEACHING PROCEDURE (TCLP)
- INTERPRETATION OF THE PHRASE ""WHICH CAN BE REASONABLY EXPECTED TO BE PRESENT"" FOR SOIL THAT EXHIBITS THE TOXICITY CHARACTERISTIC
- INAPPROPRIATE USE OF METHOD 1311 (TCLP) AS AN ALTERNATIVE EXTRACTION PROCEDURE
- REVISIONS TO THE TCLP
- SEMI-VOLATILE CONSTITUENT ANALYSIS AND ANALYTICAL LEVEL OF DETECTION LIMITATIONS OF THE TOXICITY CHARACTERISTIC LEACHING PROCEDURE (TCLP)
- ENVIRONMENTAL FACT SHEET: EPA REVISES QUALITY ASSURANCE MEASURES FOR THE TOXICITY CHARACTERISTIC LEACHING PROCEDURE

Use of Totals to Determine Whether a Solid Waste Exhibits the Toxicity Characteristic

- USE OF TOTAL WASTE ANALYSIS IN TOXICITY CHARACTERISTIC DETERMINATIONS
- CALCULATION OF TCLP CONCENTRATIONS FROM TOTAL CONCENTRATIONS
- BIOSOLIDS
- TOTAL CONCENTRATION USED TO DEMONSTRATE A WASTE DOES NOT EXHIBIT THE CHARACTERISTIC OF EP TOXICITY
- GENERATOR USE OF TOTAL CONSTITUENT ANALYSIS IN LIEU OF THE EP OR TCLP TESTS

- TOTAL CONSTITUENT ANALYSIS TO DETERMINE HAZARDOUS CHARACTERISTICS OF WASTE SAMPLE
- TOTAL WASTE ANALYSIS ON POTW BIOSOLIDS AND CERCLA LIABILITY

General Toxicity

- RCRA HAZARDOUS WASTE DETERMINATION OF SPENT NUCLEAR REACTOR FUELS
- RESPONSE TO REQUEST FOR OPINION ON SECTION 21 PETITION ON BATTERY DEPOSITS
- NOTES ON RCRA METHODS AND QA ACTIVITIES
- QC REVIEW OF PERMIT DATA
- CLARIFICATION OF NEWLY LISTED WASTES AND HAZARDOUS DEBRIS
- DESIGNATION OF AMERICIUM BERYLLIUM SOURCES UNDER RCRA
- BATTERIES, WASTE ELECTROLYTE FROM RECHARGEABLE NICKEL-CADMIUM
- REGULATORY STATUS OF PETROLEUM CONTAMINATED MEDIA AND DEBRIS UNDER THE TOXICITY CHARACTERISTIC UST TEMPORARY DEFERRAL
- REGULATORY STATUS OF BRASS PARTICLES GENERATED IN THE BELTING AND BUFFING OF BRASS CASTINGS
- REMOVAL OF TOXICITY CHARACTERISTIC WASTES FROM A SURFACE IMPOUNDMENT
- PETROLEUM-CONTAMINATED MEDIA AND DEBRIS DEFERRAL FROM THE TOXICITY CHARACTERISTIC
- LAND DISPOSAL RESTRICTIONS (LDR) TREATMENT STANDARDS AND DISPOSAL OPTIONS FOR CONTAMINATED SOIL
- ELECTRIC UTILITY POLES
- TC APPLICABILITY TO MIXED WASTE
- TC RULE HAZARDOUS WASTE DETERMINATION
- SQG COMPLIANCE WITH TC RULE
- EPA'S NON-OBJECTION TO IMPORTS OF COBALT OXIDE-MOLYBDIC OXIDE SPENT CATALYSTS INTO THE U.S. FOR RECOVERY
- SLUDGES WITHIN SURFACE IMPOUNDMENTS, NEWLY REGULATED DUE TO TC RULE
- SILVER IN WASTES AND IN SEWER DISCHARGES FROM THE PHOTO-FINISHING INDUSTRY

ATTACHMENT D

Achievable Laboratory Limits

Analysis Method:	8081B
Prep Method	3510
Matrix	NPW
Units	ug/L

CAS #	Analyte	MDL	PQL
72-54-8	4,4'-DDD	0.007	0.02
72-55-9	4,4'-DDE	0.007	0.02
50-29-3	4,4'-DDT	0.006	0.02
309-00-2	Aldrin	0.005	0.02
319-84-6	alpha-BHC	0.002	0.02
5103-71-9	alpha-Chlordane (cis)	0.003	0.02
319-85-7	beta-BHC	0.008	0.02
319-86-8	delta-BHC	0.003	0.02
60-57-1	Dieldrin	0.003	0.02
959-98-8	Endosulfan I	0.003	0.02
33213-65-9	Endosulfan II	0.006	0.02
1031-07-8	Endosulfan Sulfate	0.004	0.02
72-20-8	Endrin	0.008	0.02
7421-93-4	Endrin Aldehyde	0.010	0.02
53494-70-5	Endrin Ketone	0.004	0.02
58-89-9	gamma-BHC	0.003	0.02
5103-74-2	gamma-Chlordane (trans)	0.003	0.02
76-44-8	Heptachlor	0.003	0.02
1024-57-3	Heptachlor Epoxide	0.004	0.02
72-43-5	Methoxychlor	0.009	0.02
8001-35-2	Toxaphene	0.190	1

Analysis Method:	8081B
Prep Method	3546
Matrix	S/SW
Units	ug/kg

CAS #	Analyte	MDL	PQL
72-54-8	4,4'-DDD	0.27	1.7
72-55-9	4,4'-DDE	0.45	1.7
50-29-3	4,4'-DDT	0.38	1.7
309-00-2	Aldrin	0.55	1.7
319-84-6	alpha-BHC	0.15	1.7
5103-71-9	alpha-Chlordane (cis)	0.18	1.7
5103-74-2	gamma-Chlordane (trans)	0.29	1.7
319-85-7	beta-BHC	0.2	1.7
319-86-8	delta-BHC	0.13	1.7
60-57-1	Dieldrin	0.38	1.7
959-98-8	Endosulfan I	0.21	1.7
33213-65-9	Endosulfan II	0.69	1.7
1031-07-8	Endosulfan Sulfate	0.22	1.7
72-20-8	Endrin	0.24	1.7
7421-93-4	Endrin Aldehyde	0.36	1.7
53494-70-5	Endrin Ketone	0.46	1.7
58-89-9	gamma-BHC	0.14	1.7
76-44-8	Heptachlor	0.17	1.7
1024-57-3	Heptachlor Epoxide	0.17	1.7
72-43-5	Methoxychlor	0.44	1.7
8001-35-2	Toxaphene	5.8	35

Analysis Method:	8082A
Prep Method	3510C
Matrix	NPW
Units	ug/L

CAS #	Analyte	MDL	PQL
12674-11-2	Aroclor 1016	0.06	0.5
11104-28-2	Aroclor 1221	0.07	0.5
11141-16-5	Aroclor 1232	0.19	0.5
53496-21-9	Aroclor 1242	0.24	0.5
12672-29-6	Aroclor 1248	0.1	0.5
11097-69-1	Aroclor 1254	0.10	0.5
11096-82-5	Aroclor 1260	0.07	0.5
37324-23-5	Aroclor 1262	0.10	0.5
11100-14-4	Aroclor 1268	0.17	0.5

Analysis Method:	8082A
Prep Method	3546
Matrix	S/SW
Units	mg/kg

CAS #	Analyte	MDL	PQL
12674-11-2	Aroclor 1016	0.006	0.033
11104-28-2	Aroclor 1221	0.003	0.033
11141-16-5	Aroclor 1232	0.006	0.033
53496-21-9	Aroclor 1242	0.009	0.033
12672-29-6	Aroclor 1248	0.006	0.033
11097-69-1	Aroclor 1254	0.006	0.033
11096-82-5	Aroclor 1260	0.006	0.033
37324-23-5	Aroclor 1262	0.007	0.033
11100-14-4	Aroclor 1268	0.009	0.033

Analysis Method:	8260B/C	624
Prep Method	5030	624
Matrix	NPW	
Units	ug/L	

CAS #	Analyte	MDL	PQL
71-55-6	1,1,1-Trichloroethane	0.22	1.0
79-34-5	1,1,2,2-Tetrachloroethane	0.34	1.0
76-13-1	1,1,2-Trichloro-1,2,2-Trifluoroethane (Freon 113)	0.26	1.0
79-00-5	1,1,2-Trichloroethane	0.33	1.0
75-34-3	1,1-Dichloroethane	0.28	1.0
75-35-4	1,1-Dichloroethene	0.29	1.0
96-18-4	1,2,3-Trichlorobenzene	0.93	1.0
120-82-1	1,2,4-Trichlorobenzene	0.82	2.0
96-12-8	1,2-Dibromo-3-chloropropane	1.5	7.0
106-93-4	1,2-Dibromoethane (EDB)	0.28	1.0
95-50-1	1,2-Dichlorobenzene	0.38	1.0
107-06-2	1,2-Dichloroethane (EDC)	0.32	1.0
78-87-5	1,2-Dichloropropane	0.24	1.0
541-73-1	1,3-Dichlorobenzene	0.25	1.0
106-46-7	1,4-Dichlorobenzene	0.27	1.0
78-93-3	2-Butanone(MEK)	1.8	10
591-78-6	2-Hexanone	1.3	5.0
108-10-1	4-Methyl-2-pentanone(MIBK)	1.5	5.0
67-64-1	Acetone	3.1	10
71-43-2	Benzene	0.23	1.0
74-97-5	Bromochloromethane	0.32	1.0
75-27-4	Bromodichloromethane	0.27	1.0
75-25-2	Bromoform	0.40	1.0
74-83-9	Bromomethane	0.39	1.0
75-15-0	Carbon Disulfide	0.23	1.0
56-23-5	Carbon Tetrachloride	0.31	1.0
108-90-7	Chlorobenzene	0.19	1.0
124-48-1	Chlorodibromomethane	0.45	1.0
75-00-3	Chloroethane	0.33	1.0
67-66-3	Chloroform	0.21	1.0
74-87-3	Chloromethane	0.31	1.0
156-59-2	cis-1,2-Dichloroethene	0.32	1.0
10061-01-5	cis-1,3-Dichloropropene	0.31	1.0
98-82-8	Cumene(isopropylbenzene)	0.22	1.0
110-82-7	Cyclohexane	0.29	1.0
75-71-8	Dichlorodifluoromethane (Feon 1	0.33	1.0
100-41-4	Ethylbenzene	0.34	1.0
108-38-3/106-42-3	m/p-xylene	0.52	2.0
79-20-9	Methyl acetate	0.32	2.0
108-87-2	Methyl Cyclohexane	0.30	1.0
1634-04-4	Methyl t-Butyl Ether	0.33	1.0
75-09-2	Methylene Chloride	0.45	1.0
95-47-6	o-Xylene	0.33	1.0
100-42-5	Styrene	0.24	1.0
127-18-4	Tetrachloroethene	0.35	1.0
108-88-3	Toluene	0.23	1.0
156-60-5	trans-1,2-Dichloroethene	0.26	1.0
10061-02-6	trans-1,3-Dichloropropene	0.29	1.0
79-01-6	Trichloroethene	0.33	1.0
75-69-4	Trichlorofluoromethane (Freon 11	0.24	1.0
75-01-4	Vinyl Chloride	0.30	1.0

	Analysis Method:	8260B/C		8260B/C	
	Prep Method	5035 Low Level		5035	Mid level
	Matrix	S/SW		S/SW	
	Units	ug/kg		ug/kg	
CAS #	Analyte	MDL	PQL	MDL	PQL
71-55-6	1,1,1-Trichloroethane	0.62	2.0	11	50
79-34-5	1,1,2,2-Tetrachloroethane	0.56	2.0	17	50
76-13-1	1,1,2-Trichloro-1,2,2-trifluoroethane (Freon-113)	0.50	2.0	13	50
79-00-5	1,1,2-Trichloroethane	0.56	2.0	17	50
75-34-3	1,1-Dichloroethane	0.50	2.0	14	50
75-35-4	1,1-Dichloroethene	0.52	2.0	15	50
96-18-4	1,2,3-Trichlorobenzene	0.50	2.0	47	100
120-82-1	1,2,4-Trichlorobenzene	0.50	2.0	41	100
96-12-8	1,2-Dibromo-3-chloropropane	2.9	5.0	75	350
106-93-4	1,2-Dibromoethane (EDB)	0.54	2.0	14	50
95-50-1	1,2-Dichlorobenzene	0.50	2.0	19	50
107-06-2	1,2-Dichloroethane (EDC)	0.50	2.0	16	50
78-87-5	1,2-Dichloropropane	0.60	2.0	12	50
541-73-1	1,3-Dichlorobenzene	0.50	2.0	13	50
106-46-7	1,4-Dichlorobenzene	0.50	2.0	14	50
78-93-3	2-Butanone(MEK)	3.2	10	90	500
591-78-6	2-Hexanone	2.8	10	65	250
108-10-1	4-Methyl-2-pentanone(MIBK)	3.8	10	75	250
67-64-1	Acetone	4.6	10	155	500
71-43-2	Benzene	0.50	2.0	12	50
74-97-5	Bromochloromethane	0.50	2.0	16	50
75-27-4	Bromodichloromethane	0.71	2.0	14	50
75-25-2	Bromoform	0.52	2.0	20	50
74-83-9	Bromomethane	0.52	2.0	20	50
75-15-0	Carbon Disulfide	0.63	2.0	12	50
56-23-5	Carbon Tetrachloride	0.51	2.0	16	50
108-90-7	Chlorobenzene	0.51	2.0	10	50
124-48-1	Chlorodibromomethane	0.68	2.0	23	50
75-00-3	Chloroethane	0.85	5.0	17	50
67-66-3	Chloroform	0.53	2.0	11	50
74-87-3	Chloromethane	0.55	2.0	16	50
156-59-2	cis-1,2-Dichloroethene	0.50	2.0	16	50
10061-01-5	cis-1,3-Dichloropropene	0.55	2.0	16	50
98-82-8	Cumene(isopropylbenzene)	0.61	2.0	11	50
110-82-7	Cyclohexane	0.51	2.0	15	50
75-71-8	Dichlorodifluoromethane (Feon 1	0.67	2.0	17	50
100-41-4	Ethylbenzene	0.68	2.0	17	50
108-38-3/106-42-3	m/p-xylene	0.83	4.0	26	100
79-20-9	Methyl acetate	0.59	2.0	16	100
108-87-2	Methyl Cyclohexane	0.56	2.0	15	50
1634-04-4	Methyl t-Butyl Ether	0.50	6.0	17	50
75-09-2	Methylene Chloride	0.78	2.0	23	50
95-47-6	o-Xylene	0.58	2.0	17	50
100-42-5	Styrene	0.50	2.0	12	50
127-18-4	Tetrachloroethene	0.60	2.0	18	50
108-88-3	Toluene	0.67	2	12	50
156-60-5	trans-1,2-Dichloroethene	0.52	2.0	13	50
10061-02-6	trans-1,3-Dichloropropene	0.58	2.0	15	50
79-01-6	Trichloroethene	0.50	2.0	17	50
75-69-4	Trichlorofluoromethane (Freon 11	0.50	2.0	12	50
75-01-4	Vinyl Chloride	0.50	2.0	15	50

0.2	Analysis Method:	8270D
	Prep Method	3510C
	Matrix	NPW
	Units	ug/L

CAS #	Analyte	MDL	PQL
92-52-4	1,1'-Biphenyl	0.17	3
95-94-3	1,2,4,5-Tetrachlorobenzene	0.48	3
123-91-1	1,4-Dioxane	0.69	3
58-90-2	2,3,4,6-Tetrachlorophenol	0.48	3
95-95-4	2,4,5-Trichlorophenol	0.55	3
88-06-2	2,4,6-Trichlorophenol	0.57	3
120-83-2	2,4-Dichlorophenol	0.32	3
105-67-9	2,4-Dimethylphenol	0.21	3
51-28-5	2,4-Dinitrophenol	1.80	6
121-14-2	2,4-Dinitrotoluene	0.12	3
606-20-2	2,6-Dinitrotoluene	0.21	3
91-58-7	2-Chloronaphthalene	0.18	3
95-57-8	2-Chlorophenol	0.33	3
91-57-6	2-Methylnaphthalene	0.16	1.5
88-74-4	2-Nitroaniline	0.20	3
88-75-5	2-Nitrophenol	0.45	3
91-94-1	3,3'-Dichlorobenzidine	0.48	3
99-09-2	3-Nitroaniline	0.18	3
534-52-1	4,6-Dinitro-2-methylphenol	0.33	6
101-55-3	4-Bromophenyl-Phenylether	0.17	3
59-50-7	4-Chloro-3-Methylphenol	0.19	3
106-47-8	4-Chloroaniline	0.21	3
7005-72-3	4-Chlorophenyl-phenylether	0.14	3
100-01-6	4-Nitroaniline	0.41	3
100-02-7	4-Nitrophenol	1.10	3
83-32-9	Acenaphthene	0.15	1.5
208-96-8	Acenaphthylene	0.19	1.5
98-86-2	Acetophenone	0.24	3
120-12-7	Anthracene	0.15	1.5
1912-24-9	Atrazine	0.24	3
100-52-7	Benzaldehyde	0.26	3
56-55-3	Benzo(a)Anthracene	0.13	1.5
50-32-8	Benzo(a)Pyrene	0.22	1.5
205-99-2	Benzo(b)Fluoranthene	0.11	1.5
191-24-2	Benzo(g,h,i)Perylene	0.22	1.5
207-08-9	Benzo(k)Fluoranthene	0.19	1.5
111-91-1	Bis(2-Chloroethoxy)Methane	0.21	3
111-44-4	Bis(2-Chloroethyl)Ether	0.17	3
108-60-1	bis(2-Chloroisopropyl)ether	0.28	3
117-81-7	bis(2-ethylhexyl)Phthalate	0.22	3
85-68-7	Butylbenzylphthalate	0.11	3
105-60-2	Caprolactam	0.28	3
86-74-8	Carbazole	0.12	3
218-01-9	Chrysene	0.12	1.5
53-70-3	Dibenzo(a,h)anthracene	0.21	1.5
132-64-9	Dibenzofuran	0.11	3
84-66-2	Diethylphthalate	0.18	3
131-11-3	Dimethylphthalate	0.14	3
84-74-2	Di-n-Butylphthalate	0.14	3
117-84-0	Di-n-Octylphthalate	0.10	3
206-44-0	Fluoranthene	0.17	1.5
86-73-7	Fluorene	0.20	1.5
118-74-1	Hexachlorobenzene	0.23	3
87-68-3	Hexachlorobutadiene	0.19	3
77-47-4	Hexachlorocyclopentadiene	0.17	3
67-72-1	Hexachloroethane	0.30	3
193-39-5	Indeno(1,2,3-cd)Pyrene	0.10	3
78-59-1	Isophorone	0.15	3
108394/106445	m- and p-Cresol	0.15	3
91-20-3	Naphthalene	0.12	1.5
98-95-3	Nitrobenzene	0.28	3
621-64-7	N-Nitrosodi-n-propylamine	0.24	3
86-30-6	N-Nitrosodiphenylamine	0.18	3
95-48-7	o-Cresol	0.25	3
87-86-5	Pentachlorophenol	1.10	6
85-01-8	Phenanthrene	0.13	1.5
108-95-2	Phenol	0.23	8
129-00-0	Pyrene	0.16	1.5

Analysis Method:	8270D
Prep Method	3546
Matrix	S,SW
Units	ug/kg

CAS #	Analyte	MDL	PQL
92-52-4	1,1'-Biphenyl	7	100
95-94-3	1,2,4,5-Tetrachlorobenzene	7	100
123-91-1	1,4-Dioxane	49	100
58-90-2	2,3,4,6-Tetrachlorophenol	12	200
95-95-4	2,4,5-Trichlorophenol	12	200
88-06-2	2,4,6-Trichlorophenol	12	200
120-83-2	2,4-Dichlorophenol	8	200
105-67-9	2,4-Dimethylphenol	15	200
51-28-5	2,4-Dinitrophenol	40	200
121-14-2	2,4-Dinitrotoluene	9	100
606-20-2	2,6-Dinitrotoluene	12	100
91-58-7	2-Chloronaphthalene	6	100
95-57-8	2-Chlorophenol	8	200
91-57-6	2-Methylnaphthalene	5	100
88-74-4	2-Nitroaniline	12	200
88-75-5	2-Nitrophenol	11	200
91-94-1	3,3'-Dichlorobenzidine	38	200
99-09-2	3-Nitroaniline	20	200
534-52-1	4,6-Dinitro-2-methylphenol	26	200
101-55-3	4-Bromophenyl-Phenylether	9	100
59-50-7	4-Chloro-3-Methylphenol	10	200
106-47-8	4-Chloroaniline	12	200
7005-72-3	4-Chlorophenyl-phenylether	8	100
100-01-6	4-Nitroaniline	8	200
100-02-7	4-Nitrophenol	14	200
83-32-9	Acenaphthene	6	50
208-96-8	Acenaphthylene	7	50
98-86-2	Acetophenone	8	100
120-12-7	Anthracene	8	50
1912-24-9	Atrazine	11	100
100-52-7	Benzaldehyde	17	200
56-55-3	Benzo(a)Anthracene	5	50
50-32-8	Benzo(a)Pyrene	4	50
205-99-2	Benzo(b)Fluoranthene	5	50
191-24-2	Benzo(g,h,i)Perylene	5	50
207-08-9	Benzo(k)Fluoranthene	5	50
111-91-1	Bis(2-Chloroethoxy)Methane	9	100
111-44-4	Bis(2-Chloroethyl)Ether	13	100
108-60-1	bis(2-Chloroisopropyl)ether	15	100
117-81-7	bis(2-ethylhexyl)Phthalate	7	100
85-68-7	Butylbenzylphthalate	7	100
105-60-2	Caprolactam	18	200
86-74-8	Carbazole	7	100
218-01-9	Chrysene	5	50
53-70-3	Dibenzo(a,h)anthracene	6	50
132-64-9	Dibenzofuran	8	100
84-66-2	Diethylphthalate	8	100
131-11-3	Dimethylphthalate	7	100

84-74-2	Di-n-Butylphthalate	8	100
117-84-0	Di-n-Octylphthalate	7	100
206-44-0	Fluoranthene	5	50
86-73-7	Fluorene	6	50
118-74-1	Hexachlorobenzene	11	100
87-68-3	Hexachlorobutadiene	10	100
77-47-4	Hexachlorocyclopentadiene	11	200
67-72-1	Hexachloroethane	9	100
193-39-5	Indeno(1,2,3-cd)Pyrene	7	50
78-59-1	Isophorone	6	100
108394/106445	m- and p-Cresol	8	200
91-20-3	Naphthalene	5	50
98-95-3	Nitrobenzene	12	100
621-64-7	N-Nitrosodi-n-propylamine	8	100
86-30-6	N-Nitrosodiphenylamine	8	100
95-48-7	o-Cresol	11	200
87-86-5	Pentachlorophenol	26	200
85-01-8	Phenanthrene	5	50
108-95-2	Phenol	10	200
129-00-0	Pyrene	5	50
120-82-1	1,2,4-Trichlorobenzene	6	100
95-50-1	1,2-Dichlorobenzene	9	100
528-29-0	1,2-Dinitrobenzene	19	100
122-66-7	1,2-Diphenylhydrazine	9	100
541-73-1	1,3-Dichlorobenzene	7	100
99-65-0	1,3-Dinitrobenzene	11	100
106-46-7	1,4-Dichlorobenzene	7	100
100-25-4	1,4-Dinitrobenzene	14	100
90-12-0	1-Methylnaphthalene	8	100
935-95-5	2,3,5,6-Tetrachlorophenol	20	200
608-27-5	2,3-Dichloraniline	11	100
87-65-0	2,6-Dichlorophenol	11	200
91-59-8	2-Naphthylamine	16	200
10482-56-1	alpha-Terpineol	9	100
62-53-3	Aniline	15	200
103-33-3	Azobenzene	9	100
92-87-5	Benzidine	32	200
65-85-0	Benzoic Acid	7	540
100-51-6	Benzyl Alcohol	18	100
60-51-5	Dimethoate	11	200
122-39-4	Diphenylamine	7	100
124-18-5	n-Decane	9	100
629-78-7	n-Heptadecane	18	200
55-18-5	N-Nitrosodiethylamine	13	100
62-75-9	N-Nitrosodimethylamine	15	100
924-16-3	N-Nitrosodi-n-butylamine	11	100
930-55-2	N-Nitrosopyrrolidine	12	100
593-45-3	n-Octadecane	13	100
608-93-5	Pentachlorobenzene	11	100
110-86-1	Pyridine	18	200
108-46-3	Resorcinol	14	100

Additional Appendix IX Compounds

99-35-4	1,3,5-Trinitrobenzene	78	300
130-15-4	1,4-Naphthoquinone	53	300
106-50-3	1,4-Phenylenediamine**	66	1000
90-13-1	1-Chloronaphthalene	51	300
134-32-7	1-Naphthylamine	160	300
53-96-3	2-Acetylaminofluorene	45	300
109-06-8	2-Picoline	190	300
119-93-7	3,3-Dimethylbenzidine	130	300
56-49-5	3-Methylcholanthrene	23	300
92-67-1	4-Aminobiphenyl	70	300
56-57-5	4-Nitroquinoline-N-oxide	96	300
99-55-8	5-Nitro-o-toluidine	56	300
57-97-6	7,12-Dimethylbenz(a)anthrac	54	300
122-09-8	a,a-Dimethylphenethylamine	110	1000
140-57-8	Aramite	55	300
510-15-6	Chlorobenzilate	45	300
2303-16-4	Diallate	58	300
224-42-0	Dibenz(a,j)acridine	210	300
60-51-5	Dimethoate	15	300
101-84-8	Diphenyl ether	50	300
298-04-4	Disulfoton	31	300
97-63-2	Ethyl methacrylate	68	300
62-50-0	Ethyl methanesulfonate	58	300
52-85-7	Famphur	21	300
1888-71-7	Hexachloropropene	50	300
465-73-6	Isodrin	67	300
120-58-1	Isosafrole (cis & trans)	49	300
143-50-0	Kepone	290	1000
91-80-5	Methapyrilene	22	300
66-27-3	Methyl methanesulfonate	62	300
298-00-0	Methyl Parathion	12	300
10595-95-6	N-Nitrosomethylethylamine	115	333
59-89-2	N-Nitrosomorpholine	70	300
100-75-4	N-Nitrosopiperidine	61	300
126-68-1	O,O,O-TriethylPhosphorothio	27	300
297-97-2	O,O-Diethyl-O-pyrazinylph	15	300
95-53-4	o-Toluidine	51	300
56-38-2	Parathion	14	300
60-11-7	p-Dimethylaminoazobenzene	63	300
76-01-7	Pentachloroethane	55	300
82-68-8	Pentachloronitrobenzene	54	300
62-44-2	Phenacetin	49	300
298-02-2	Phorate	13	300
23950-58-5	Pronamide	36	300
94-59-7	Safrole	60	300
3689-24-5	Sulfotepp	24	300

Analysis Method:	8270D
Prep Method	3510C
Matrix	Water
Units	ug/L

CAS #	Analyte	MDL	PQL
106-46-7	1,4-Dichlorobenzene	3.6	60
95-95-4	2,4,5-Trichlorphenol	11.0	60
88-06-2	2,4,6-Trichlorophenol	11.4	60
121-14-2	2,4-Dinitrotoluene	2.4	60
118-74-1	Hexachlorobenzene	4.6	60
87-68-3	Hexachlorobutadiene	3.8	60
67-72-1	Hexachloroethane	6.0	60
108394/106445	mp-Cresol (3/4-Methylphenol)	3.0	60
98-95-3	Nitrobenzene	6	60
95-48-7	o-Cresol (2-Methylphenol)	5.0	60
87-86-5	Pentachlorophenol	22	120
110-86-1	Pyridine	7	60

Analysis Method:	8260B
Prep Method	5030
Matrix	Water
Units	ug/L

CAS #	Analyte	MDL	PQL
75-35-4	1,1-Dichloroethene	3.8	20
107-06-2	1,2-Dichloroethane	4.4	20
78-93-3	2-Butanone	23	100
71-43-2	Benzene	3.8	20
56-23-5	Carbon Tetrachloride	2	20
108-90-7	Chlorobenzene	3.2	20
67-66-3	Chloroform	4.2	20
127-18-4	Tetrachloroethene	4.6	20
79-01-6	Trichloroethene	5.4	20
7501-4	Vinyl Chloride	4	20

Analysis Method:	8151
Prep Method:	8151
Matrix:	Aqueous
Units:	ug/L

CAS #	Analyte	MDL	PQL
93-72-1	2,4,5-TP	3.2	6.0
94-75-7	2,4-D	2.20	4.0

Analysis Method:	8081
Prep Method	3510C
Matrix	Water
Units	ug/L

CAS #	Analyte	MDL	PQL
58-89-9	gamma-BHC	0.06	0.40
72-20-8	Endrin	0.16	0.40
76-44-8	Heptachlor	0.06	0.40
1024-57-3	Heptachlor Epoxide	0.08	0.40
72-43-5	Methoxychlor	0.18	0.40
57-74-9	Chlordane	0.70	10
8001-35-2	Toxaphene	3.8	20

Metals

Analysis Method:	6010
Prep Method	3015
Matrix	Water
Units	mg/L

CAS #	Analyte	MDL	PQL
7440-38-2	Arsenic	0.046	0.14
7440-39-3	Barium	0.94	2.8
7440-43-9	Cadmium	0.0037	0.011
7440-47-3	Chromium	0.01	0.028
7439-92-1	Lead	0.011	0.033
7782-49-2	Selenium	0.037	0.11
7440-22-4	Silver	0.007	0.022

Analysis Method:	7470A
Prep Method	7470A
Matrix	Water
Units	mg/L

CAS #	Analyte	MDL	PQL
7439-97-6	Mercury	0.00066	0.002

		6010 / 3015		6010/3051	
		RDL (ug/L)	MDL (ug/L)	RDL (mg/kg)	MDL (mg/kg)
7429-90-5	Aluminum	111	36	10	3.33
7440-36-0	Antimony	22	10	2	0.667
7440-38-2	Arsenic	9	3	2	0.667
7440-39-3	Barium	11.1	3.6	1	0.333
7440-41-7	Beryllium	4.4	1.4	1	0.333
7440-43-9	Cadmium	2.2	0.73	0.5	0.167
7440-70-2	Calcium	111	36	10	3.33
7440-47-3	Chromium	5.6	2	1	0.333
7440-48-4	Cobalt	5.6	2	1	0.333
7440-50-8	Copper	11.1	3.6	2	0.667
7439-89-6	Iron	66.7	22	10	3.33
7439-92-1	Lead	6.67	2.2	2	0.667
7439-95-4	Magnesium	111	36	10	3.33
7439-96-5	Manganese	5.56	2	1	0.333
7440-02-0	Nickel	22	7.3	2	0.667
7440-09-7	Potassium	556	180	50	16.7
7782-49-2	Selenium	22	7.3	5	1.67
7440-22-4	Silver	4.4	1.4	0.5	0.167
7440-23-5	Sodium	556	180	50	16.7
7440-28-0	Thallium	22	7.3	3	1
7440-62-2	Vanadium	5.56	2	1	0.333
7440-66-6	Zinc	22	7.3	2	0.667

		7470		7471	
		RDL (mg/L)	MDL (mg/L)	RDL (mg/kg)	MDL (mg/kg)
7439-97-6	Mercury	0.002	0.00066	0.05	0.016

		9012B			
		RDL (mg/L)	MDL (mg/L)	RDL (mg/kg)	MDL (mg/kg)
57-12-5	Cyanide	0.005	0.0006	0.25	0.09

	RDL (PPM)	MDL (PPM)
Reactive Cyanide	10	1
Reactive Sulfide	6.25	1.25