AMERICAN ELECTRIC POWER

American Electric Power
1 Riverside Plaza
Columbus, OH 43215-2373
AEP.com

April 19, 2016

Eleanor Kane
Environmental Engineer
Air Enforcement and Compliance Assurance
77 W. Jackson Blvd (AE-17J)
Chicago, IL 60604

Ethan Chatfield
Environmental Engineer
Air Enforcement and Compliance Assurance
77 W. Jackson Blvd (AE-17J)
Chicago, IL 60604

Re: AEP Generation Resources Inc.- Conesville Plant
USEPA Site Visit – April 5, 2016
Response to Requests for Information
Freedom of Information Act Request

Dear Ms. Kane and Mr. Chatfield:

This is a follow-up to your recent visit to the AEP Generation Resources Inc., Conesville Plant located in Coshocton County, Ohio. During your visit, you requested documentation of the visible emissions readings of the Unit 4 stack attempted during the previous week, and the results of any sulfuric acid emission testing conducted for Units 4, 5 or 6. Please find attached the requested Method 9 Visible Emissions Observation Forms for Unit 4. We are also attaching a copy of the Observation Log discussed during the visit which is used to record the attempts to take a visible emissions reading for Unit 4. A reading is scheduled to be attempted at least once per day when the unit is in service. We are also including the Opacity Daily Summary Report from the certified continuous opacity monitor on Unit 6 which was in service at the time of your visit. None of the information available through either the certified opacity monitor or the plant's attempts to conduct visible emissions observations using the USEPA approved reference method show an exceedance of the opacity requirements applicable to these units during this period.

I understand that you reported having conducted one or more Method 9 readings on the date of your visit that were in excess of 20%. We respectfully request, pursuant to the Federal Freedom of Information Act, that you provide us with all documentation related to any opacity observations for the Conesville Units taken in connection with your visit, and provide us with a copy of any notes or other information recorded by either of you during the course of your visit

to the plant. We request that you waive any costs associated with providing this information given the limited scope of this request, but agree to pay any reasonable costs associated with this request.

Sulfuric acid measurements are not routinely taken on the units. Two sets of $SO_3$ data have been collected since 2009. The first set was collected during performance testing after installation of the JBR and SCR on Conesville Unit 4, from February 3-4, 2010, and was intended to measure $SO_3$ removal efficiency at the stack. During the first 3-hour test run the average removal efficiency was 60.1%, and during the second 3-hour test run the average removal efficiency was 43.9% . The results of the individual runs are set forth in the table below.

Conesville Unit 4 - JBR $SO_3$ Removal Efficiency

| Date/Run | $SO_3$ Inlet ppmdv | $SO_3$ Outlet ppmdv | Removal Efficiency (%) |
|---|---|---|---|
| 02/03/2010 – Run 1 | 11.71 | 3.42 | 70.8 |
| 02/03/2010 – Run 2 | 9.76 | 1.62 | 83.4 |
| 02/03/2010 – Run 3 | 8.87 | 6.56 | 26.0 |
| 02/03/2010 – Ave. | 10.11 | 3.87 | 60.1 |
| 02/04/2010 – Run 1 | 8.63 | 5.53 | 35.9 |
| 02/04/2010 – Run 2 | 9.09 | 4.52 | 50.2 |
| 02/04/2010 – Run 3 | 8.96 | 4.89 | 45.4 |
| 02/04/2010 – Ave. | 8.80 | 4.98 | 43.9 |

The second set of data was obtained from Unit 6 in 2013 and 2014, during testing of various cold-side mercury catalysts. Samples were taken to evaluate the impact of $SO_3$ concentrations on catalyst performance using both washed and unwashed coals. The values for $SO_3$ were obtained using the controlled condensation method (CCM) and are presented in the table below.

Conesville Unit 6 $SO_3$ Data

| Date | $SO_3$ ppmdv @ 3% $O_2$ using CCM | Fuel |
|---|---|---|
| 05/21/2013 | 16 | Unwashed |
| 05/22/2013 | 12 | Unwashed |
| 06/04/2013 | 14 | Washed |
| 06/05/2013 | 21 | Washed |
| 06/06/2013 | 10 | Washed |

| Date | $SO_3$ ppmdv @ 3% $O_2$ using CCM | Fuel |
|---|---|---|
| 06/11/2013 | 5 | Washed |
| 07/31/2-13 | 30 | Unwashed |
| 09/11/2013 | 12 | Unwashed |
| 09/12/2013 | 13 | Unwashed |
| 10/07/2014 | 8 | Unwashed |
| 10/08/2014 | 23 | Unwashed |

During your visit, I also understand that there was a discussion regarding the confidential nature of certain information pertaining to the Conesville Plant. Please note that the Conesville Plant is owned and operated by AEP Generation Resources Inc., an unregulated supplier of electric generation services. As such, any commercially sensitive information regarding plant operations and outages (start dates, end dates, duration, etc.) and equipment status must be treated as business confidential. We respectfully request that you treat any such information recorded in the notes taken during your visit as confidential business information in accordance with 40 CFR Part 2. Our request for a copy of any notes recorded during your visit will assist us in identifying any confidential information contained in those notes.

Please contact me if you have any questions concerning this submittal at (614) 716-1612.

Very truly yours,

Janet J. Henry

Janet J. Henry
Deputy General Counsel
American Electric Power

cc (w/o att):

| | |
|---|---|
| Mike Zwick | Conesville Plant Manager |
| John McManus | Vice President Environmental Services |
| Robert Hodanbosi | Chief, Ohio EPA DAPC, Columbus Ohio |

# CV4 EPA Method 9 Observation Log

| Date | Time 1st Attempt | Time 2nd Attempt | Time 3rd Attempt | Complete | Filed | Reader | Comment |
|---|---|---|---|---|---|---|---|
| 3/30/16 | 900 | 1100 | 1310 | ✓ | ✓ | TC | I/S |
| 3/31/16 | 900 | 1130 | 1300 | ✓ | ✓ | TC | I/S |
| 4/1/16 | 930 | 1100 | 1300 | ✓ | ✓ | TC | I/S |
| 4/2/16 | 1300 | | | ✓ | ✓ | LJS | I/S |
| 4/3/16 | 1219 | | | ✓ | ✓ | ND | I/S |
| 4/4/16 | 0933 | 1133 | | ✓ | ✓ | SAG | I/S |
| 4/5/16 | 1316 | | | ✓ | ✓ | TC | I/S |

# EPA
# VISIBLE EMISSION OBSERVATION FORM 1

| Form Number | | Page 1 | Of 1 |
|---|---|---|---|
| Continued on VEO Form Number | | | |

Method Used (check one or specify other)
Method 9 ☒ 203A ☐ 203B ☐ Other _____

| | | |
|---|---|---|
| Company Name AMERICAN ELECTRIC POWER | | |
| Facility Name CONESVILLE PLANT | | |
| Street Address 47201 CR 273 | | |
| City CONESVILLE | State OHIO | Zip 43811 |

| | | |
|---|---|---|
| Process Coal fired boiler | Unit # 4 | Operating Mode 1/5 |
| Control Equipment SBR SCR Precips | | Operating Mode 1/5 |

Describe Emission Point: Round Smokestack

| | |
|---|---|
| Height of Emiss Pt Start 800 End 800 | Height of Emiss Pt Rel to Observer Start 800 End 800 |
| Distance to Emiss Pt Start 2232 End 2232 | Direction to Emiss Pt (Degrees) Start 332 End 332 |
| Vertical Angle to Obs Pt Start 22 End 22 | Direction to Obs Pt (Degrees) Start 338 End 338 |
| Distance and Direction to Observation Point from Emission Point Start 400' N | End 400' N |
| Describe Emissions Start Fanning | End Fanning |
| Emission Color Start White End White | Water Droplet Plume Attached ☒ Detached ☐ None ☐ |
| Describe Plume Background Start Pt Sunny Sky | End Pt Sunny Sky |
| Background Color Start Blue/White End Blue/White | Sky Conditions Start Pt Sunny End Pt Sunny |
| Wind Speed Start 9 End 9 | Wind Direction Start N End N |
| Ambient Temp Start 58 End 58 | Wet Bulb Temp 45.7 / RH Percent 37 |

SOURCE LAYOUT SKETCH

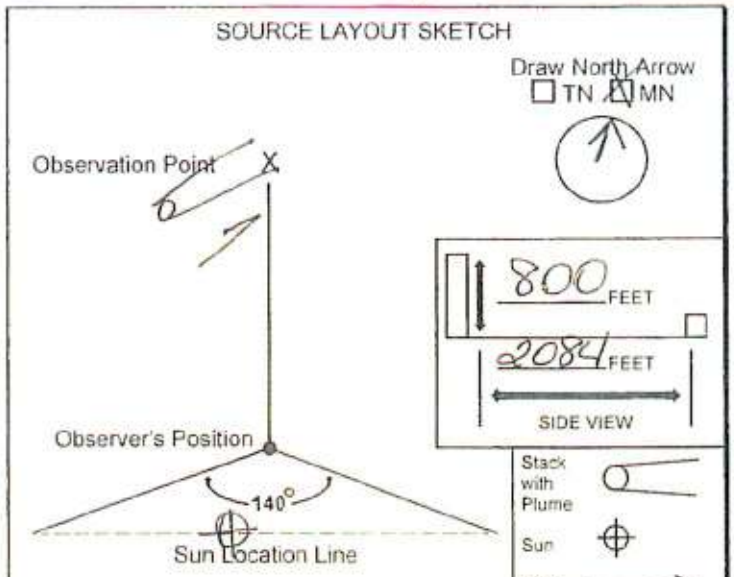


| | | |
|---|---|---|
| Longitude W81°52.7' | Latitude N40°10.8' | Declination 7° |

Additional Information

| Observation Date | Time Zone | Start Time | End Time |
|---|---|---|---|
| 3/30/16 | EST | 1240 | 1310 |

| Sec / Min | 0 | 15 | 30 | 45 | COMMENTS |
|---|---|---|---|---|---|
| 1 | 10 | 10 | 10 | 10 | |
| 2 | 10 | 10 | 10 | 10 | |
| 3 | 10 | 10 | 10 | 10 | |
| 4 | 10 | 10 | 10 | 10 | |
| 5 | 10 | 10 | 10 | 10 | |
| 6 | 10 | 10 | 10 | 10 | SixMinAvg=10 |
| 7 | 10 | 10 | 10 | 10 | |
| 8 | 10 | 10 | 10 | 10 | |
| 9 | 10 | 10 | 10 | 10 | |
| 10 | 10 | 10 | 10 | 10 | |
| 11 | 10 | 10 | 10 | 10 | |
| 12 | 10 | 10 | 10 | 10 | SixMinAvg=10 |
| 13 | 10 | 10 | 10 | 10 | |
| 14 | 10 | 10 | 10 | 10 | |
| 15 | 10 | 10 | 10 | 10 | |
| 16 | 10 | 10 | 10 | 10 | |
| 17 | 10 | 10 | 10 | 10 | |
| 18 | 10 | 10 | 10 | 10 | SixMinAvg=10 |
| 19 | 10 | 10 | 10 | 10 | |
| 20 | 10 | 10 | 10 | 10 | |
| 21 | 10 | 10 | 10 | 10 | |
| 22 | 10 | 10 | 10 | 10 | |
| 23 | 10 | 10 | 10 | 10 | |
| 24 | 10 | 10 | 10 | 10 | SixMinAvg=10 |
| 25 | 10 | 10 | 10 | 10 | |
| 26 | 10 | 10 | 10 | 10 | |
| 27 | 10 | 10 | 10 | 10 | |
| 28 | 10 | 10 | 10 | 10 | |
| 29 | 10 | 10 | 10 | 10 | |
| 30 | 10 | 10 | 10 | 10 | SixMinAvg=10 |

| | |
|---|---|
| Observer's Name (Print) Tesa Lanley | |
| Observer's Signature Tesa Lanley | Date 3/30/16 |
| Organization AEP | |
| Certified By Whitlow | Date 3/22/16 |

VEOF1.1

33130C

WHITE COPY: ENVIRONMENTAL COORDINATOR YELLOW COPY: CEMS COORDINATOR

# EPA
# VISIBLE EMISSION OBSERVATION FORM 1

| Form Number | | Page 1 | Of 1 |
|---|---|---|---|
| Continued on VEO Form Number | | | |

Method Used (check one or specify other)
Method 9 ☒ 203A ☐ 203B ☐ Other _____

| | | |
|---|---|---|
| Company Name: AMERICAN ELECTRIC POWER | | |
| Facility Name: CONESVILLE PLANT | | |
| Street Address: 47201 CR 273 | | |
| City: CONESVILLE | State: OHIO | Zip: 43811 |

| | | |
|---|---|---|
| Process: Coal fired boiler | Unit #: 4 | Operating Mode: 1/5 |
| Control Equipment: JBR SCR Precips | | Operating Mode: 1/5 |

Describe Emission Point: Round Smokestack

| | |
|---|---|
| Height of Emiss Pt Start 800 End 800 | Height of Emiss Pt Rel to Observer Start 800 End 800 |
| Distance to Emiss Pt Start 2232 End 2232 | Direction to Emiss Pt (Degrees) Start 340 End 340 |
| Vertical Angle to Obs Pt Start 22 End 22 | Direction to Obs Pt (Degrees) Start 12 End 12 |
| Distance and Direction to Observation Point from Emission Point Start 800' N | End 800' N |
| Describe Emissions Start Fanning | End Fanning |
| Emission Color Start White End White | Water Droplet Plume Attached ☒ Detached ☐ None ☐ |
| Describe Plume Background Start Cloudy Sky | End Cloudy Sky |
| Background Color Start White End White | Sky Conditions Start Cloudy End Cloudy |
| Wind Speed Start 13 End 13 | Wind Direction Start N End N |
| Ambient Temp Start 58 End 58 | Wet Bulb Temp 50.6 / RH Percent 58 |

SOURCE LAYOUT SKETCH

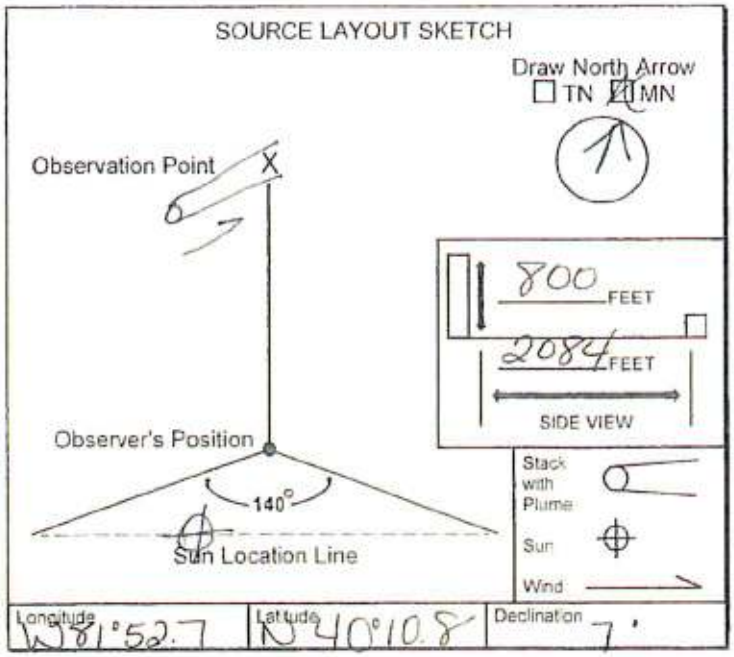


| | | |
|---|---|---|
| Longitude W81°52.7 | Latitude N40°10.8 | Declination 7° |

Additional Information

| Observation Date | Time Zone | Start Time | End Time |
|---|---|---|---|
| 3/31/16 | EST | 1230 | 1300 |

| Sec / Min | 0 | 15 | 30 | 45 | COMMENTS |
|---|---|---|---|---|---|
| 1 | — | — | — | — | |
| 2 | — | — | — | — | |
| 3 | — | — | — | — | |
| 4 | — | — | — | — | Raining, Cloudy |
| 5 | — | — | — | — | |
| 6 | — | — | — | — | No contrasting |
| 7 | — | — | — | — | background |
| 8 | — | — | — | — | |
| 9 | — | — | — | — | |
| 10 | — | — | — | — | |
| 11 | — | — | — | — | |
| 12 | — | — | — | — | |
| 13 | — | — | — | — | |
| 14 | — | — | — | — | |
| 15 | — | — | — | — | |
| 16 | — | — | — | — | |
| 17 | — | — | — | — | |
| 18 | — | — | — | — | |
| 19 | — | — | — | — | |
| 20 | — | — | — | — | |
| 21 | — | — | — | — | |
| 22 | — | — | — | — | |
| 23 | — | — | — | — | |
| 24 | — | — | — | — | |
| 25 | — | — | — | — | |
| 26 | — | — | — | — | |
| 27 | — | — | — | — | |
| 28 | — | — | — | — | |
| 29 | — | — | — | — | |
| 30 | — | — | — | — | |

| | |
|---|---|
| Observer's Name (Print): Tesa Laney | |
| Observer's Signature: Tesa Laney | Date: 3/31/16 |
| Organization: AEP | |
| Certified By: Whitlow Ent. | Date: 3/22/16 |

VEOF1.1

33130C0705

WHITE COPY: ENVIRONMENTAL COORDINATOR YELLOW COPY: CEMS COORDINATOR

# EPA
# VISIBLE EMISSION OBSERVATION FORM 1

| Form Number | | Page 1 | Of 1 |
|---|---|---|---|
| Continued on VEO Form Number | | | |

Method Used (check one or specify other): Method 9 ☒ 203A ☐ 203B ☐ Other _____

| | | |
|---|---|---|
| Company Name: AMERICAN ELECTRIC POWER | | |
| Facility Name: CONESVILLE PLANT | | |
| Street Address: 47201 CR 273 | | |
| City: CONESVILLE | State: OHIO | Zip: 43811 |

| | | | |
|---|---|---|---|
| Process: Coal fired boiler | Unit #: 4 | Operating Mode: 1/5 | |
| Control Equipment: LNB, SCR, Precips | | Operating Mode: 1/5 | |

Describe Emission Point: Round Smokestack

| | |
|---|---|
| Height of Emiss Pt Start 800 End 800 | Height of Emiss Pt Rel to Observer Start 800 End 800 |
| Distance to Emiss Pt Start 2232 End 2232 | Direction to Emiss Pt (Degrees) Start 332 End 332 |
| Vertical Angle to Obs Pt Start 22 End 22 | Direction to Obs Pt (Degrees) Start 10 End 10 |
| Distance and Direction to Observation Point from Emission Point Start 900' NE End 900' NE | |
| Describe Emissions Start Fanning End Fanning | |
| Emission Color Start White End White | Water Droplet Plume Attached ☒ Detached ☐ None ☐ |
| Describe Plume Background Start Pt Cloudy Sky End Pt Cloudy Sky | |
| Background Color Start Blue/white End Blue/white | Sky Conditions Start Cloudy End Cloudy |
| Wind Speed Start 14 End 14 | Wind Direction Start NE End NE |
| Ambient Temp Start 55 End 55 | Wet Bulb Temp 48.2 / RH Percent 59 |

SOURCE LAYOUT SKETCH

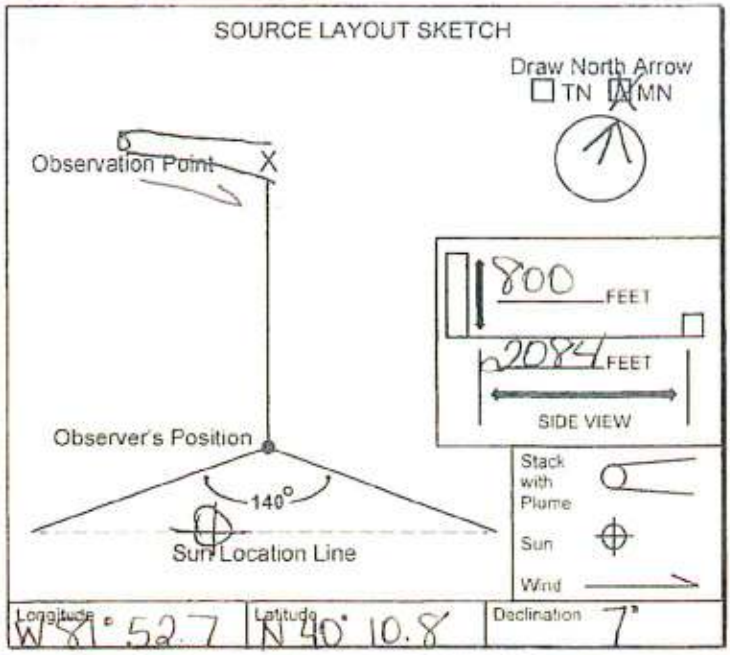


| | | |
|---|---|---|
| Longitude W 81° 52.7 | Latitude N 40° 10.8 | Declination 7° |

Additional Information

| Observation Date | Time Zone | Start Time | End Time |
|---|---|---|---|
| 4/1/16 | EST | 1230 | 1300 |

| Sec / Min | 0 | 15 | 30 | 45 | COMMENTS |
|---|---|---|---|---|---|
| 1 | — | — | — | — | |
| 2 | — | — | — | — | |
| 3 | — | — | — | — | Cloudy |
| 4 | — | — | — | — | |
| 5 | — | — | — | — | No contrasting |
| 6 | — | — | — | — | background |
| 7 | — | — | — | — | |
| 8 | — | — | — | — | |
| 9 | — | — | — | — | |
| 10 | — | — | — | — | |
| 11 | — | — | — | — | |
| 12 | — | — | — | — | |
| 13 | — | — | — | — | |
| 14 | — | — | — | — | |
| 15 | — | — | — | — | |
| 16 | — | — | — | — | |
| 17 | — | — | — | — | |
| 18 | — | — | — | — | |
| 19 | — | — | — | — | |
| 20 | — | — | — | — | |
| 21 | — | — | — | — | |
| 22 | — | — | — | — | |
| 23 | — | — | — | — | |
| 24 | — | — | — | — | |
| 25 | — | — | — | — | |
| 26 | — | — | — | — | |
| 27 | — | — | — | — | |
| 28 | — | — | — | — | |
| 29 | — | — | — | — | |
| 30 | — | — | — | — | |

| | |
|---|---|
| Observer's Name (Print): Tesa Laney | |
| Observer's Signature: Tesa Laney | Date: 4/1/16 |
| Organization: AEP | |
| Certified By: Whitlow Trent | Date: 3/22/16 |

VEOF1.1

33130C0701

WHITE COPY: ENVIRONMENTAL COORDINATOR YELLOW COPY: CEMS COORDINATOR

# EPA
# VISIBLE EMISSION OBSERVATION FORM 1

| Form Number | | Page 1 | Of 1 |
|---|---|---|---|
| Continued on VEO Form Number | | | |

Method Used (check one or specify other)
Method 9 ☒ 203A ☐ 203B ☐ Other _____

| | | |
|---|---|---|
| Company Name AMERICAN ELECTRIC POWER | | |
| Facility Name CONESVILLE PLANT | | |
| Street Address 47201 CR 273 | | |
| City CONESVILLE | State OHIO | Zip 43811 |

| | | |
|---|---|---|
| Process COAL FIRED BOILER | Unit # 4 | Operating Mode 1/5 |
| Control Equipment FGD-SCR-PRECIPS | | Operating Mode 1/2 |

Describe Emission Point: ROUND SMOKE STACK

| | |
|---|---|
| Height of Emiss. Pt Start 800 End 800 | Height of Emiss. Pt Rel. to Observer Start 800 End 800 |
| Distance to Emiss. Pt Start 1892 End 1892 | Direction to Emiss. Pt. (Degrees) Start 350 End 350 |
| Vertical Angle to Obs. Pt Start 25 End 25 | Direction to Obs. Pt. (Degrees) Start 0 End 0 |
| Distance and Direction to Observation Point from Emission Point Start 800 E End 800 E | |
| Describe Emissions Start CONING End CONING | |
| Emission Color Start WH End WH | Water Droplet Plume Attached ☒ Detached ☐ None ☐ |
| Describe Plume Background Start CLOUDY End CLOUDY | |
| Background Color Start gr/WH End gr/WH | Sky Conditions Start CLOUDY End CLOUDY |
| Wind Speed Start 18 End 18 | Wind Direction Start WEST End WEST |
| Ambient Temp Start 50 End 50 | Wet Bulb Temp 40 S / RH Percent 41 |

SOURCE LAYOUT SKETCH

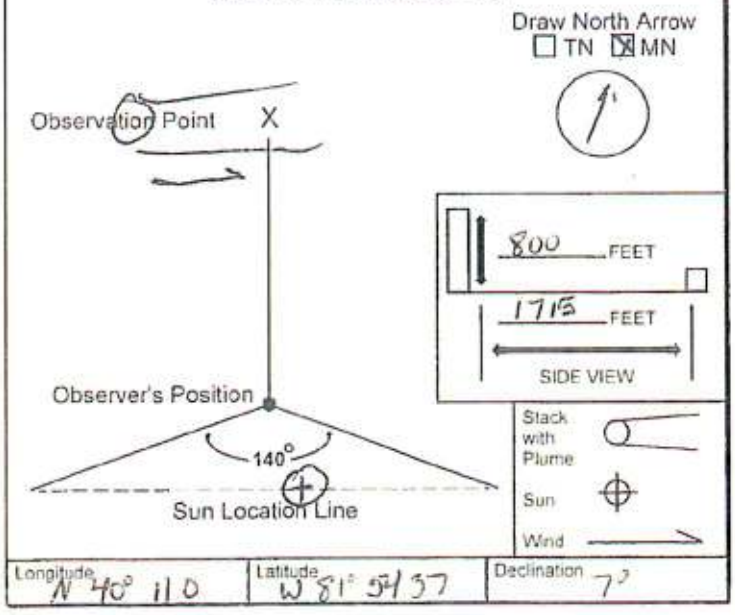


| | | |
|---|---|---|
| Longitude N 40° 110 | Latitude W 81° 54 37 | Declination 7° |

Additional Information

| Observation Date | Time Zone | Start Time | End Time |
|---|---|---|---|
| 04/02/16 | EST | 13:00 | 13:30 |

| Sec Min | 0 | 15 | 30 | 45 | COMMENTS |
|---|---|---|---|---|---|
| 1 | – | – | – | – | |
| 2 | – | – | – | – | |
| 3 | – | – | – | – | |
| 4 | – | – | – | | CLOUDY |
| 5 | | | – | – | |
| 6 | – | – | – | – | |
| 7 | – | – | – | – | |
| 8 | – | – | – | – | NO CONTRASTING |
| 9 | – | – | – | – | BACKGROUND |
| 10 | – | – | – | – | |
| 11 | – | – | – | – | |
| 12 | – | – | – | – | |
| 13 | – | – | – | – | |
| 14 | – | – | – | – | |
| 15 | – | – | – | – | |
| 16 | – | – | – | – | |
| 17 | – | – | – | – | |
| 18 | – | – | – | – | |
| 19 | – | – | | – | |
| 20 | – | – | – | – | |
| 21 | – | – | – | – | |
| 22 | – | – | – | – | |
| 23 | – | – | – | – | |
| 24 | – | – | – | – | |
| 25 | – | – | – | – | |
| 26 | – | – | – | – | |
| 27 | – | – | – | – | |
| 28 | – | – | – | – | |
| 29 | – | – | – | – | |
| 30 | – | – | – | – | |

| | |
|---|---|
| Observer's Name (Print) LEE SUMMERS | |
| Observer's Signature | Date 04/02/16 |
| Organization AEP | |
| Certified By WHITLOW | Date 02/10/16 |

VEOF1.1

33130C

WHITE COPY: ENVIRONMENTAL COORDINATOR YELLOW COPY: CEMS COORDINATOR

# EPA
# VISIBLE EMISSION OBSERVATION FORM 1

| Form Number | | | | | | Page 1 | Of 1 |
|---|---|---|---|---|---|---|---|
| Continued on VEO Form Number | | | | | | | |

Method Used (check one or specify other)
Method 9 ☒ 203A ☐ 203B ☐ Other: _____

| | | |
|---|---|---|
| Company Name: AMERICAN ELECTRIC POWER | | |
| Facility Name: CONESVILLE PLANT | | |
| Street Address: 47201 CR 273 | | |
| City: CONESVILLE | State: OHIO | Zip: 43811 |

| | | | |
|---|---|---|---|
| Process: Coal fired Boiler | Unit #: 4 | Operating Mode: 1/S | |
| Control Equipment: FGD, SCR, PRECIP | | Operating Mode: 1/S | |

Describe Emission Point: ROUND SMOKE STACK

| | |
|---|---|
| Height of Emiss. Pt. Start 800 End 800 | Height of Emiss. Pt. Rel. to Observer Start 800 End 800 |
| Distance to Emiss. Pt. Start 1876 End 1876 | Direction to Emiss. Pt. (Degrees) Start 340 End 340 |
| Vertical Angle to Obs. Pt. Start 23.1 End 23.1 | Direction to Obs. Pt. (Degrees) Start 20 End 20 |
| Distance and Direction to Observation Point from Emission Point Start 800 E End 800 E | |
| Describe Emissions Start FANNING | End FANNING |
| Emission Color Start WHITE End WHITE | Water Droplet Plume Attached ☒ Detached ☐ None ☐ |
| Describe Plume Background Start Cloudy SKY | End Cloudy SKY |
| Background Color Start Cloudy WHITE End Cloudy White | Sky Conditions Start Cloudy End Cloudy |
| Wind Speed Start 12 End 12 | Wind Direction Start W End W |
| Ambient Temp Start 39 F End 39 F | Wet Bulb Temp 32.6 / RH Percent 48% |

SOURCE LAYOUT SKETCH

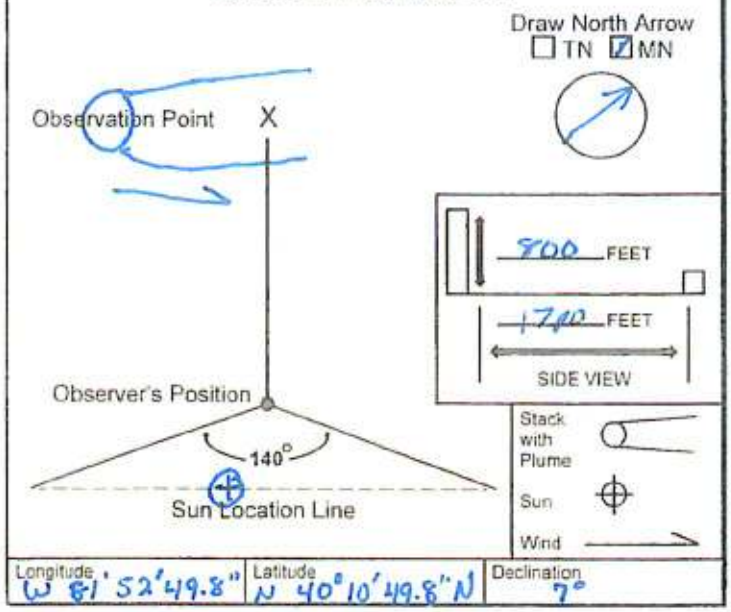


| | | |
|---|---|---|
| Longitude W 81° 52' 49.8" | Latitude N 40° 10' 49.8" N | Declination 7° |

Additional Information

| Observation Date | Time Zone | Start Time | End Time |
|---|---|---|---|
| 4/3/16 | EST. | 12:19 | 12:49 |

| Sec / Min | 0 | 15 | 30 | 45 | COMMENTS |
|---|---|---|---|---|---|
| 1 | – | – | – | – | |
| 2 | – | – | – | – | Cloudy No |
| 3 | – | – | – | – | Contrasting BACK- |
| 4 | – | – | – | – | GROUND |
| 5 | – | – | – | – | |
| 6 | – | – | – | – | |
| 7 | – | – | – | – | |
| 8 | – | – | – | – | |
| 9 | – | – | – | – | |
| 10 | – | – | – | – | |
| 11 | – | – | – | – | |
| 12 | – | – | – | – | |
| 13 | – | – | – | – | |
| 14 | – | – | – | – | |
| 15 | – | – | – | – | |
| 16 | – | – | – | – | |
| 17 | – | – | – | – | |
| 18 | – | – | – | – | |
| 19 | – | – | – | – | |
| 20 | – | – | – | – | |
| 21 | – | – | – | – | |
| 22 | – | – | – | – | |
| 23 | – | – | – | – | |
| 24 | – | – | – | – | |
| 25 | – | – | – | – | |
| 26 | – | – | – | – | |
| 27 | – | – | – | – | |
| 28 | – | – | – | – | |
| 29 | – | – | – | – | |
| 30 | – | – | – | – | |

| | |
|---|---|
| Observer's Name (Print): NEIL D DAVIS | |
| Observer's Signature: N. DAVIS | Date: 4/3/16 |
| Organization: AEP | |
| Certified By: WHITLOW Enterprises | Date: 2/10/16 |

VEOF1.1

33130C0706

WHITE COPY: ENVIRONMENTAL COORDINATOR YELLOW COPY: CEMS COORDINATOR

# EPA
# VISIBLE EMISSION OBSERVATION FORM 1

| | | | |
|---|---|---|---|
| Method Used (check one or specify other) Method 9 ☒ 203A ☐ 203B ☐ Other _____ | | Form Number | Page 1 Of 1 |
| | | Continued on VEO Form Number | |

| | | | |
|---|---|---|---|
| Company Name AMERICAN ELECTRIC POWER | | | |
| Facility Name CONESVILLE PLANT | | | |
| Street Address 47201 CR 273 | | | |
| City CONESVILLE | State OHIO | Zip 43811 | |

| | | | |
|---|---|---|---|
| Process coal fired boiler | Unit # 4 | Operating Mode 1/5 | |
| Control Equipment FGD-SCR precip | | Operating Mode 1/5 | |

| | |
|---|---|
| Describe Emission Point round smoke stack | |
| Height of Emiss. Pt Start 800 End 800 | Height of Emiss. Pt. Rel. to Observer Start 800 End 800 |
| Distance to Emiss. Pt Start 1892 End 1892 | Direction to Emiss. Pt. (Degrees) Start 350 End 350 |
| Vertical Angle to Obs. Pt Start 25 End 25 | Direction to Obs. Pt. (Degrees) Start 355 End 355 |
| Distance and Direction to Observation Point from Emission Point Start 1000' SE End 1000' SE | |
| Describe Emissions Start coming End coming | |
| Emission Color Start wh End wh | Water Droplet Plume Attached ☒ Detached ☐ None ☐ |
| Describe Plume Background Start rainy End rainy | |
| Background Color Start gr/wh End gr/wh | Sky Conditions Start rainy End rainy |
| Wind Speed Start 11 End 11 | Wind Direction Start SE End SE |
| Ambient Temp Start 45 End 45 | Wet Bulb Temp — RH Percent 75 |

SOURCE LAYOUT SKETCH

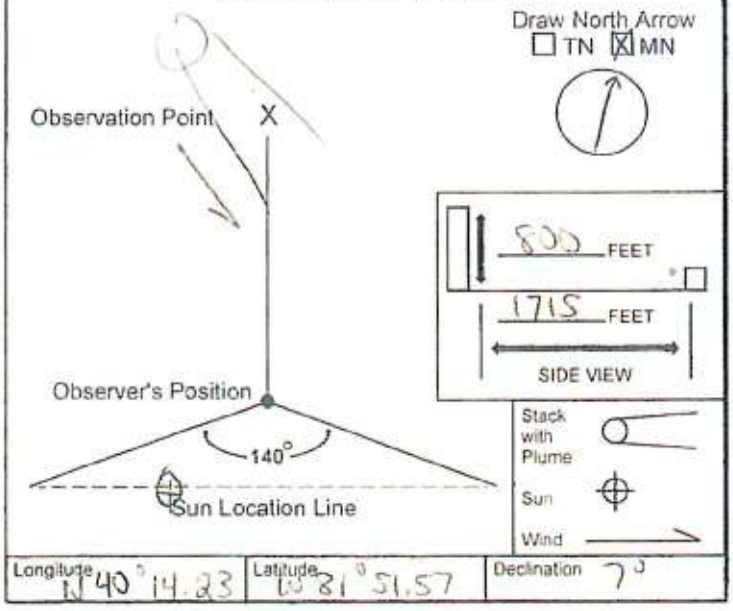


| | | |
|---|---|---|
| Longitude N 40° 14.23 | Latitude W 81° 51.57 | Declination 7° |

Additional Information

| Observation Date | Time Zone | Start Time | End Time |
|---|---|---|---|
| 4/4/16 | EST | 1130 | 1200 |

| Sec / Min | 0 | 15 | 30 | 45 | COMMENTS |
|---|---|---|---|---|---|
| 1 | — | — | — | — | |
| 2 | — | — | — | — | |
| 3 | — | — | — | — | |
| 4 | — | — | — | — | |
| 5 | — | — | — | — | Raining / Cloudy |
| 6 | — | — | — | — | |
| 7 | — | — | — | — | No contrasting |
| 8 | — | — | — | — | background |
| 9 | — | — | — | — | |
| 10 | — | — | — | — | |
| 11 | — | — | — | — | |
| 12 | — | — | — | — | |
| 13 | — | — | — | — | |
| 14 | — | — | — | — | |
| 15 | — | — | — | — | |
| 16 | — | — | — | — | |
| 17 | — | — | — | — | |
| 18 | — | — | — | — | |
| 19 | — | — | — | — | |
| 20 | — | — | — | — | |
| 21 | — | — | — | — | |
| 22 | — | — | — | — | |
| 23 | — | — | — | — | |
| 24 | — | — | — | — | |
| 25 | — | — | — | — | |
| 26 | — | — | — | — | |
| 27 | — | — | — | — | |
| 28 | — | — | — | — | |
| 29 | — | — | — | — | |
| 30 | — | — | — | — | |

| | | | |
|---|---|---|---|
| Observer's Name (Print) STEVE BALDWIN | | | |
| Observer's Signature [signature] | | Date 4/4/16 | |
| Organization AEP | | | |
| Certified By Whitlow | | Date 3/27/16 | |

VEOF1.1

33130C0705

WHITE COPY: ENVIRONMENTAL COORDINATOR YELLOW COPY: CEMS COORDINATOR

# EPA
# VISIBLE EMISSION OBSERVATION FORM 1

| Form Number | | Page 1 | Of 1 |
|---|---|---|---|
| Continued on VEO Form Number | | | |

Method Used (check one or specify other): Method 9 ☒ 203A ☐ 203B ☐ Other _____

| | | |
|---|---|---|
| Company Name: AMERICAN ELECTRIC POWER | | |
| Facility Name: CONESVILLE PLANT | | |
| Street Address: 47201 CR 273 | | |
| City: CONESVILLE | State: OHIO | Zip: 43811 |

| | | | |
|---|---|---|---|
| Process: Coal fired boiler | Unit # 4 | Operating Mode | 1/5 |
| Control Equipment: JBS, SCR, Precip | | Operating Mode | 1/5 |

Describe Emission Point: Round Smokestack

| | |
|---|---|
| Height of Emiss. Pt. Start 800 End 800 | Height of Emiss. Pt. Rel. to Observer Start 800 End 800 |
| Distance to Emiss. Pt. Start 2232 End 2232 | Direction to Emiss. Pt. (Degrees) Start 332 End 332 |
| Vertical Angle to Obs. Pt. Start 2.3 End 2.3 | Direction to Obs. Pt. (Degrees) Start 356 End 356 |
| Distance and Direction to Observation Point from Emission Point Start 1600' SE End 1600' SE | |
| Describe Emissions Start Fanning End Fanning | |
| Emission Color Start White End White | Water Droplet Plume Attached ☒ Detached ☐ None ☐ |
| Describe Plume Background Start Clear Sky End Clear Sky | |
| Background Color Start Blue End Blue | Sky Conditions Start SUNNY End SUNNY |
| Wind Speed Start 4 End 4 | Wind Direction Start SE End SE |
| Ambient Temp Start 42 End 42 | Wet Bulb Temp 32.6 / RH Percent 31 |

SOURCE LAYOUT SKETCH

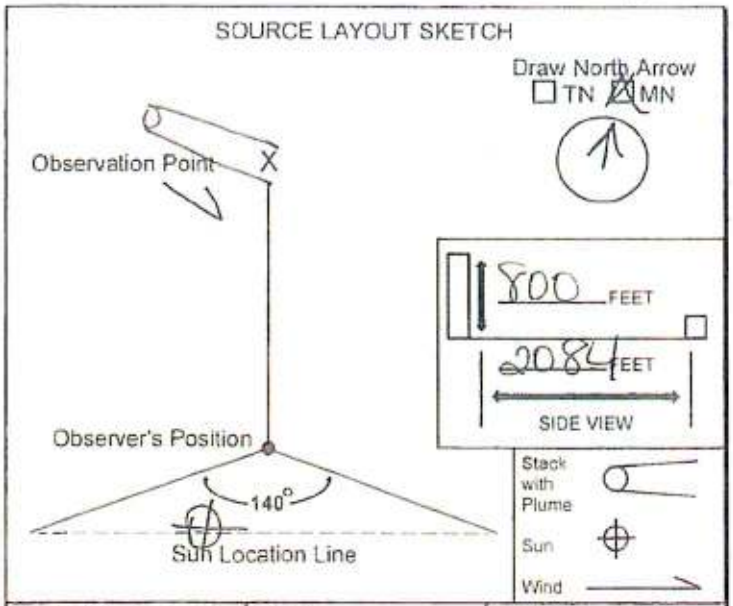


| | | |
|---|---|---|
| Longitude W81° 52.7' | Latitude N40° 10.8' | Declination 7° |

Additional Information

| Observation Date | Time Zone | Start Time | End Time |
|---|---|---|---|
| 4/5/16 | EST | 1245 | 1315 |

| Sec Min | 0 | 15 | 30 | 45 | COMMENTS |
|---|---|---|---|---|---|
| 1 | 10 | 10 | 10 | 10 | |
| 2 | 10 | 10 | 10 | 10 | |
| 3 | 10 | 10 | 10 | 10 | |
| 4 | 10 | 10 | 10 | 10 | |
| 5 | 10 | 10 | 10 | 10 | |
| 6 | 10 | 10 | 10 | 10 | Six Min Avg = 10 |
| 7 | 10 | 10 | 10 | 10 | |
| 8 | 10 | 10 | 10 | 10 | |
| 9 | 10 | 10 | 10 | 10 | |
| 10 | 10 | 10 | 10 | 10 | |
| 11 | 10 | 10 | 10 | 10 | |
| 12 | 10 | 10 | 10 | 10 | Six Min Avg = 10 |
| 13 | 10 | 10 | 10 | 10 | |
| 14 | 10 | 10 | 10 | 10 | |
| 15 | 10 | 10 | 10 | 10 | |
| 16 | 10 | 10 | 10 | 10 | |
| 17 | 10 | 10 | 10 | 10 | |
| 18 | 10 | 10 | 10 | 10 | Six Min Avg = 10 |
| 19 | 10 | 10 | 10 | 10 | |
| 20 | 10 | 10 | 10 | 10 | |
| 21 | 10 | 10 | 10 | 10 | |
| 22 | 10 | 10 | 10 | 0 | |
| 23 | 10 | 10 | 10 | 10 | |
| 24 | 10 | 10 | 10 | 10 | Six Min Avg = 10 |
| 25 | 10 | 10 | 10 | 10 | |
| 26 | 10 | 10 | 10 | 10 | |
| 27 | 10 | 10 | 10 | 10 | |
| 28 | 10 | 10 | 10 | 10 | |
| 29 | 10 | 10 | 10 | 10 | |
| 30 | 10 | 10 | 10 | 10 | Six Min Avg = 10 |

| | |
|---|---|
| Observer's Name (Print): Tesa Laney | |
| Observer's Signature: Tesa Laney | Date 4/5/16 |
| Organization: AEP | |
| Certified By: Whitlow Ent. | Date 3/22/16 |

VEOF1.1

33130C0705

WHITE COPY: ENVIRONMENTAL COORDINATOR YELLOW COPY: CEMS COORDINATOR

# Opacity Daily Summary Report

## Unit 6

**From:** 03/30/2016 00:00 **To:** 04/05/2016 23:59 **Facility Name:** Conesville Power Plant

**Generated:** 04/13/2016 10:05 **Location:** Conesville, OH

**Tag Name:** U6_Opac_Pct_6M

**Value may not exceed:** 20

Red - Invalid Data | Green - Edited Status | Blue - Edited Value | * - Excess Emission | # - Exclusion

| Date And Time | 00 | 06 | 12 | 18 | 24 | 30 | 36 | 42 | 48 | 54 |
|---|---|---|---|---|---|---|---|---|---|---|
| 03/30/2016 00:00 | 5 | 5 | 5 | 5 | 5 | 5 | 5 | 5 | 5 | 5 |
| 03/30/2016 01:00 | 5 | 5 | 5 | 5 | 5 | 5 | 5 | 5 | 5 | 5 |
| 03/30/2016 02:00 | 5 | 5 | 5 | 5 | 5 | 5 | 5 | 5 | 5 | 5 |
| 03/30/2016 03:00 | 5 | 5 | 5 | 5 | 5 | 5 | 5 | 5 | 5 | 5 |
| 03/30/2016 04:00 | 5 | 5 | 5 | 5 | 5 | 5 | 5 | 5 | 5 | 6 |
| 03/30/2016 05:00 | 6 | 7 | 8 | 11 | 9 | 8 | 7 | 7 | 7 | 7 |
| 03/30/2016 06:00 | 7 | 8 | 8 | 9 | 10 | 18 | 11 | 10 | 10 | 10 |
| 03/30/2016 07:00 | 10 | 9 | 9 | 8 | 8 | 8 | 7 | 7 | 7 | 7 |
| 03/30/2016 08:00 | 7 | 8 | 7 | 7 | 7 | 7 | 7 | 7 | 7 | 8 |
| 03/30/2016 09:00 | 8 | 9 | 8 | 8 | 8 | 7 | 7 | 7 | 7 | 7 |
| 03/30/2016 10:00 | 7 | 7 | 6 | 6 | 6 | 6 | 6 | 6 | 6 | 6 |
| 03/30/2016 11:00 | 6 | 6 | 5 | 5 | 6 | 6 | 6 | 6 | 6 | 6 |
| 03/30/2016 12:00 | 6 | 6 | 6 | 6 | 6 | 6 | 6 | 7 | 7 | 7 |
| 03/30/2016 13:00 | 7 | 7 | 7 | 7 | 7 | 7 | 7 | 7 | 7 | 7 |
| 03/30/2016 14:00 | 7 | 7 | 7 | 7 | 7 | 7 | 7 | 7 | 7 | 7 |
| 03/30/2016 15:00 | 7 | 7 | 7 | 7 | 7 | 7 | 7 | 7 | 7 | 7 |
| 03/30/2016 16:00 | 7 | 7 | 7 | 7 | 7 | 7 | 7 | 7 | 7 | 7 |
| 03/30/2016 17:00 | 7 | 7 | 7 | 7 | 7 | 7 | 7 | 7 | 7 | 7 |
| 03/30/2016 18:00 | 7 | 7 | 7 | 7 | 7 | 7 | 6 | 7 | 7 | 8 |
| 03/30/2016 19:00 | 9 | 9 | 13 | 11 | 9 | 9 | 9 | 8 | 8 | 8 |
| 03/30/2016 20:00 | 8 | 8 | 7 | 7 | 6 | 6 | 6 | 6 | 6 | 6 |
| 03/30/2016 21:00 | 6 | 6 | 6 | 7 | 6 | 6 | 6 | 7 | 6 | 7 |
| 03/30/2016 22:00 | 7 | 6 | 6 | 6 | 6 | 7 | 6 | 7 | 6 | 7 |
| 03/30/2016 23:00 | 6 | 7 | 6 | 6 | 6 | 7 | 6 | 6 | 6 | 6 |

**Daily Summary:**

| | |
|---|---|
| Average: | 7 |
| Minimum: | 5 |
| Maximum: | 13 |
| %SI: | 0 |

# Opacity Daily Summary Report

## Unit 6

From: 03/30/2016 00:00 To: 04/05/2016 23:59 Facility Name: Conesville Power Plant

Generated: 04/13/2016 10:05 Location: Conesville, OH

Tag Name: U6_Opac_Pct_6M

Value may not exceed: 20

Red - Invalid Data | Green - Edited Status | Blue - Edited Value | * - Excess Emission | # - Exclusion

| Date And Time | 00 | 06 | 12 | 18 | 24 | 30 | 36 | 42 | 48 | 54 |
|---|---|---|---|---|---|---|---|---|---|---|
| 03/31/2016 00:00 | 6 | 6 | 6 | 6 | 6 | 6 | 6 | 6 | 6 | 6 |
| 03/31/2016 01:00 | 6 | 6 | 6 | 6 | 6 | 6 | 7 | 6 | 6 | 6 |
| 03/31/2016 02:00 | 6 | 6 | 6 | 6 | 6 | 6 | 6 | 6 | 6 | 6 |
| 03/31/2016 03:00 | 6 | 6 | 6 | 6 | 6 | 6 | 6 | 6 | 6 | 6 |
| 03/31/2016 04:00 | 6 | 6 | 6 | 6 | 6 | 6 | 6 | 6 | 6 | 6 |
| 03/31/2016 05:00 | 6 | 6 | 6 | 6 | 7 | 7 | 7 | 7 | 7 | 7 |
| 03/31/2016 06:00 | 6 | 6 | 6 | 6 | 6 | 18 | 5 | 5 | 5 | 5 |
| 03/31/2016 07:00 | 5 | 5 | 5 | 5 | 5 | 5 | 5 | 5 | 5 | 5 |
| 03/31/2016 08:00 | 5 | 5 | 4 | 5 | 5 | 5 | 5 | 5 | 5 | 5 |
| 03/31/2016 09:00 | 5 | 5 | 5 | 4 | 5 | 5 | 5 | 5 | 5 | 5 |
| 03/31/2016 10:00 | 5 | 5 | 5 | 5 | 5 | 5 | 6 | 6 | 6 | 7 |
| 03/31/2016 11:00 | 7 | 8 | 11 | 10 | 8 | 7 | 6 | 6 | 5 | 5 |
| 03/31/2016 12:00 | 5 | 4 | 4 | 4 | 5 | 5 | 5 | 5 | 5 | 5 |
| 03/31/2016 13:00 | 5 | 5 | 5 | 5 | 5 | 5 | 5 | 5 | 5 | 5 |
| 03/31/2016 14:00 | 5 | 5 | 5 | 5 | 5 | 5 | 5 | 6 | 5 | 5 |
| 03/31/2016 15:00 | 5 | 5 | 5 | 5 | 5 | 5 | 5 | 5 | 5 | 5 |
| 03/31/2016 16:00 | 5 | 5 | 5 | 5 | 5 | 5 | 5 | 5 | 5 | 5 |
| 03/31/2016 17:00 | 5 | 5 | 5 | 5 | 5 | 6 | 5 | 6 | 6 | 5 |
| 03/31/2016 18:00 | 6 | 6 | 6 | 6 | 5 | 6 | 6 | 5 | 5 | 5 |
| 03/31/2016 19:00 | 5 | 6 | 6 | 5 | 5 | 5 | 5 | 5 | 5 | 5 |
| 03/31/2016 20:00 | 5 | 5 | 5 | 5 | 5 | 5 | 5 | 5 | 5 | 5 |
| 03/31/2016 21:00 | 5 | 5 | 5 | 5 | 5 | 5 | 5 | 5 | 5 | 5 |
| 03/31/2016 22:00 | 5 | 5 | 5 | 5 | 5 | 5 | 5 | 5 | 5 | 5 |
| 03/31/2016 23:00 | 5 | 5 | 5 | 5 | 5 | 5 | 5 | 5 | 5 | 5 |

Daily Summary:

| | |
|---|---|
| Average: | 5 |
| Minimum: | 4 |
| Maximum: | 11 |
| %SI: | 0 |

# Opacity Daily Summary Report

## Unit 6

From: 03/30/2016 00:00 To: 04/05/2016 23:59 Facility Name: Conesville Power Plant

Generated: 04/13/2016 10:05 Location: Conesville, OH

Tag Name: U6_Opac_Pct_6M

Value may not exceed: 20

Red = Invalid Data | Green = Edited Status | Blue = Edited Value | * = Excess Emission | # = Exclusion

| Date And Time | 00 | 06 | 12 | 18 | 24 | 30 | 36 | 42 | 48 | 54 |
|---|---|---|---|---|---|---|---|---|---|---|
| 04/01/2016 00:00 | 5 | 5 | 5 | 5 | 5 | 5 | 5 | 5 | 5 | 5 |
| 04/01/2016 01:00 | 5 | 5 | 5 | 5 | 5 | 5 | 5 | 5 | 5 | 5 |
| 04/01/2016 02:00 | 5 | 5 | 5 | 5 | 5 | 5 | 5 | 5 | 5 | 5 |
| 04/01/2016 03:00 | 5 | 5 | 5 | 5 | 5 | 5 | 5 | 5 | 5 | 5 |
| 04/01/2016 04:00 | 5 | 5 | 5 | 5 | 5 | 5 | 5 | 5 | 5 | 5 |
| 04/01/2016 05:00 | 5 | 5 | 5 | 5 | 5 | 5 | 6 | 6 | 6 | 6 |
| 04/01/2016 06:00 | 5 | 5 | 5 | 5 | 5 | 18 | 5 | 5 | 5 | 5 |
| 04/01/2016 07:00 | 5 | 5 | 5 | 5 | 5 | 6 | 6 | 7 | 7 | 7 |
| 04/01/2016 08:00 | 6 | 6 | 5 | 4 | 5 | 5 | 6 | 6 | 6 | 5 |
| 04/01/2016 09:00 | 5 | 5 | 5 | 5 | 5 | 5 | 5 | 5 | 5 | 5 |
| 04/01/2016 10:00 | 5 | 6 | 6 | 7 | 6 | 7 | 7 | 7 | 7 | 10 |
| 04/01/2016 11:00 | 9 | 8 | 7 | 7 | 6 | 5 | 5 | 4 | 5 | 5 |
| 04/01/2016 12:00 | 4 | 4 | 4 | 5 | 5 | 5 | 5 | 5 | 5 | 5 |
| 04/01/2016 13:00 | 5 | 5 | 5 | 5 | 5 | 5 | 5 | 5 | 5 | 5 |
| 04/01/2016 14:00 | 5 | 5 | 5 | 5 | 5 | 5 | 5 | 5 | 5 | 5 |
| 04/01/2016 15:00 | 5 | 5 | 5 | 5 | 5 | 5 | 5 | 5 | 5 | 5 |
| 04/01/2016 16:00 | 6 | 6 | 5 | 5 | 5 | 5 | 5 | 5 | 5 | 4 |
| 04/01/2016 17:00 | 4 | 4 | 4 | 4 | 4 | 4 | 4 | 4 | 4 | 4 |
| 04/01/2016 18:00 | 4 | 4 | 4 | 4 | 4 | 4 | 4 | 4 | 4 | 4 |
| 04/01/2016 19:00 | 4 | 4 | 4 | 4 | 4 | 4 | 4 | 4 | 4 | 4 |
| 04/01/2016 20:00 | 4 | 4 | 4 | 4 | 4 | 4 | 4 | 4 | 4 | 4 |
| 04/01/2016 21:00 | 5 | 4 | 4 | 4 | 4 | 4 | 4 | 4 | 4 | 4 |
| 04/01/2016 22:00 | 4 | 4 | 4 | 4 | 4 | 4 | 4 | 4 | 4 | 4 |
| 04/01/2016 23:00 | 4 | 4 | 4 | 4 | 4 | 4 | 4 | 4 | 4 | 4 |

Daily Summary:

| | |
|---|---|
| Average: | 5 |
| Minimum: | 4 |
| Maximum: | 10 |
| %SI: | 0 |

# Opacity Daily Summary Report

## Unit 6

From: 03/30/2016 00:00 To: 04/05/2016 23:59 Facility Name: Conesville Power Plant
Generated: 04/13/2016 10:05 Location: Conesville, OH

Tag Name: U6_Opac_Pct_6M
Value may not exceed: 20
Red - Invalid Data | Green - Edited Status | Blue - Edited Value | * - Excess Emission | # - Exclusion

| Date And Time | 00 | 06 | 12 | 18 | 24 | 30 | 36 | 42 | 48 | 54 |
|---|---|---|---|---|---|---|---|---|---|---|
| 04/02/2016 00:00 | 4 | 4 | 4 | 4 | 4 | 4 | 4 | 4 | 4 | 4 |
| 04/02/2016 01:00 | 4 | 4 | 4 | 4 | 4 | 4 | 4 | 4 | 4 | 4 |
| 04/02/2016 02:00 | 4 | 4 | 4 | 4 | 4 | 4 | 4 | 4 | 4 | 4 |
| 04/02/2016 03:00 | 4 | 4 | 4 | 4 | 4 | 4 | 4 | 4 | 4 | 4 |
| 04/02/2016 04:00 | 4 | 4 | 4 | 4 | 4 | 4 | 4 | 4 | 4 | 4 |
| 04/02/2016 05:00 | 4 | 4 | 4 | 4 | 4 | 4 | 4 | 4 | 4 | 4 |
| 04/02/2016 06:00 | 4 | 4 | 4 | 4 | 4 | 18 | 20 | 9 | 17 | 18 |
| 04/02/2016 07:00 | 4 | 4 | 4 | 4 | 4 | 4 | 4 | 4 | 4 | 4 |
| 04/02/2016 08:00 | 4 | 4 | 4 | 4 | 4 | 4 | 4 | 4 | 4 | 4 |
| 04/02/2016 09:00 | 4 | 4 | 4 | 4 | 4 | 4 | 4 | 4 | 4 | 4 |
| 04/02/2016 10:00 | 4 | 4 | 4 | 4 | 4 | 4 | 4 | 4 | 4 | 4 |
| 04/02/2016 11:00 | 4 | 4 | 4 | 4 | 4 | 4 | 4 | 4 | 4 | 4 |
| 04/02/2016 12:00 | 4 | 4 | 4 | 4 | 4 | 4 | 4 | 4 | 4 | 4 |
| 04/02/2016 13:00 | 4 | 4 | 4 | 4 | 4 | 4 | 4 | 4 | 4 | 4 |
| 04/02/2016 14:00 | 4 | 4 | 4 | 4 | 4 | 4 | 4 | 4 | 4 | 4 |
| 04/02/2016 15:00 | 4 | 4 | 4 | 4 | 4 | 4 | 4 | 4 | 4 | 4 |
| 04/02/2016 16:00 | 4 | 4 | 4 | 4 | 4 | 4 | 4 | 4 | 4 | 4 |
| 04/02/2016 17:00 | 4 | 4 | 4 | 4 | 4 | 4 | 4 | 4 | 4 | 4 |
| 04/02/2016 18:00 | 4 | 4 | 4 | 4 | 4 | 4 | 4 | 4 | 4 | 4 |
| 04/02/2016 19:00 | 4 | 4 | 4 | 4 | 4 | 3 | 4 | 4 | 4 | 4 |
| 04/02/2016 20:00 | 4 | 4 | 4 | 4 | 3 | 3 | 3 | 4 | 4 | 3 |
| 04/02/2016 21:00 | 4 | 4 | 4 | 4 | 4 | 4 | 4 | 4 | 4 | 4 |
| 04/02/2016 22:00 | 4 | 4 | 4 | 4 | 4 | 4 | 4 | 4 | 4 | 4 |
| 04/02/2016 23:00 | 4 | 4 | 4 | 4 | 4 | 4 | 4 | 4 | 4 | 4 |

Daily Summary:

| | |
|---|---|
| Average: | 4 |
| Minimum: | 3 |
| Maximum: | 4 |
| %SI: | 2 |

# Opacity Daily Summary Report

## Unit 6

**From:** 03/30/2016 00:00 **To:** 04/05/2016 23:59 **Facility Name:** Conesville Power Plant
**Generated:** 04/13/2016 10:05 **Location:** Conesville, OH

**Tag Name:** U6_Opac_Pct_6M
**Value may not exceed:** 20

Red = Invalid Data | Green = Edited Status | Blue = Edited Value | * = Excess Emission | # = Exclusion

| Date And Time | 00 | 06 | 12 | 18 | 24 | 30 | 36 | 42 | 48 | 54 |
|---|---|---|---|---|---|---|---|---|---|---|
| 04/03/2016 00:00 | 4 | 4 | 4 | 4 | 4 | 4 | 4 | 4 | 4 | 4 |
| 04/03/2016 01:00 | 4 | 4 | 4 | 4 | 4 | 4 | 4 | 4 | 4 | 4 |
| 04/03/2016 02:00 | 4 | 4 | 4 | 4 | 4 | 4 | 4 | 4 | 4 | 4 |
| 04/03/2016 03:00 | 4 | 4 | 4 | 4 | 4 | 4 | 4 | 4 | 4 | 4 |
| 04/03/2016 04:00 | 4 | 4 | 4 | 4 | 4 | 4 | 4 | 4 | 4 | 4 |
| 04/03/2016 05:00 | 4 | 4 | 4 | 4 | 4 | 4 | 4 | 4 | 4 | 4 |
| 04/03/2016 06:00 | 4 | 4 | 4 | 4 | 4 | 17 | 4 | 4 | 4 | 4 |
| 04/03/2016 07:00 | 4 | 4 | 4 | 4 | 4 | 4 | 4 | 4 | 4 | 4 |
| 04/03/2016 08:00 | 4 | 4 | 4 | 4 | 4 | 4 | 4 | 4 | 4 | 4 |
| 04/03/2016 09:00 | 4 | 4 | 4 | 4 | 4 | 4 | 4 | 4 | 4 | 4 |
| 04/03/2016 10:00 | 4 | 4 | 4 | 4 | 4 | 4 | 4 | 4 | 5 | 4 |
| 04/03/2016 11:00 | 4 | 4 | 5 | 4 | 4 | 4 | 4 | 4 | 4 | 4 |
| 04/03/2016 12:00 | 4 | 4 | 5 | 5 | 5 | 5 | 5 | 5 | 5 | 5 |
| 04/03/2016 13:00 | 5 | 5 | 5 | 5 | 5 | 5 | 5 | 5 | 5 | 5 |
| 04/03/2016 14:00 | 5 | 5 | 5 | 5 | 5 | 5 | 5 | 5 | 5 | 5 |
| 04/03/2016 15:00 | 5 | 5 | 5 | 5 | 5 | 5 | 5 | 5 | 5 | 5 |
| 04/03/2016 16:00 | 5 | 6 | 6 | 7 | 7 | 7 | 7 | 6 | 6 | 6 |
| 04/03/2016 17:00 | 6 | 6 | 6 | 6 | 6 | 6 | 6 | 6 | 6 | 6 |
| 04/03/2016 18:00 | 6 | 6 | 6 | 6 | 6 | 6 | 6 | 6 | 6 | 6 |
| 04/03/2016 19:00 | 6 | 6 | 6 | 6 | 6 | 6 | 6 | 6 | 6 | 6 |
| 04/03/2016 20:00 | 6 | 6 | 6 | 6 | 6 | 6 | 6 | 6 | 6 | 6 |
| 04/03/2016 21:00 | 6 | 6 | 6 | 6 | 5 | 6 | 6 | 6 | 6 | 6 |
| 04/03/2016 22:00 | 6 | 6 | 6 | 6 | 6 | 6 | 6 | 6 | 6 | 6 |
| 04/03/2016 23:00 | 6 | 6 | 6 | 6 | 6 | 6 | 6 | 6 | 6 | 6 |

**Daily Summary:**

| | |
|---|---|
| Average: | 5 |
| Minimum: | 4 |
| Maximum: | 7 |
| %SI: | 0 |

# Opacity Daily Summary Report

## Unit 6

**From:** 03/30/2016 00:00 **To:** 04/05/2016 23:59 **Facility Name:** Conesville Power Plant

**Generated:** 04/13/2016 10:05 **Location:** Conesville, OH

**Tag Name:** U6_Opac_Pct_6M

**Value may not exceed:** 20

Red - Invalid Data | Green - Edited Status | Blue - Edited Value | * - Excess Emission | # - Exclusion

| Date And Time | 00 | 06 | 12 | 18 | 24 | 30 | 36 | 42 | 48 | 54 |
|---|---|---|---|---|---|---|---|---|---|---|
| 04/04/2016 00:00 | 6 | 6 | 6 | 6 | 6 | 6 | 6 | 6 | 6 | 6 |
| 04/04/2016 01:00 | 6 | 6 | 6 | 6 | 6 | 6 | 6 | 6 | 6 | 6 |
| 04/04/2016 02:00 | 6 | 6 | 6 | 6 | 6 | 6 | 6 | 6 | 6 | 6 |
| 04/04/2016 03:00 | 6 | 6 | 6 | 6 | 6 | 6 | 6 | 6 | 6 | 6 |
| 04/04/2016 04:00 | 6 | 6 | 6 | 5 | 5 | 5 | 5 | 5 | 5 | 5 |
| 04/04/2016 05:00 | 5 | 5 | 5 | 5 | 5 | 5 | 5 | 5 | 5 | 5 |
| 04/04/2016 06:00 | 5 | 5 | 5 | 5 | 5 | 18 | 3 | 3 | 4 | 4 |
| 04/04/2016 07:00 | 3 | 4 | 4 | 4 | 4 | 4 | 4 | 4 | 4 | 4 |
| 04/04/2016 08:00 | 4 | 4 | 5 | 6 | 9 | 8 | 8 | 9 | 8 | 8 |
| 04/04/2016 09:00 | 8 | 7 | 7 | 7 | 7 | 7 | 7 | 7 | 7 | 7 |
| 04/04/2016 10:00 | 7 | 6 | 6 | 6 | 6 | 6 | 6 | 6 | 6 | 6 |
| 04/04/2016 11:00 | 6 | 6 | 6 | 5 | 6 | 6 | 5 | 5 | 6 | 5 |
| 04/04/2016 12:00 | 6 | 5 | 5 | 5 | 5 | 5 | 6 | 5 | 5 | 5 |
| 04/04/2016 13:00 | 5 | 5 | 5 | 6 | 5 | 5 | 6 | 6 | 6 | 6 |
| 04/04/2016 14:00 | 6 | 5 | 6 | 5 | 5 | 5 | 5 | 5 | 6 | 6 |
| 04/04/2016 15:00 | 6 | 6 | 6 | 6 | 6 | 6 | 6 | 6 | 6 | 6 |
| 04/04/2016 16:00 | 5 | 6 | 6 | 6 | 5 | 6 | 6 | 5 | 5 | 5 |
| 04/04/2016 17:00 | 5 | 5 | 6 | 5 | 6 | 6 | 6 | 6 | 6 | 5 |
| 04/04/2016 18:00 | 5 | 5 | 6 | 5 | 5 | 5 | 6 | 5 | 5 | 5 |
| 04/04/2016 19:00 | 5 | 5 | 5 | 5 | 5 | 5 | 6 | 6 | 6 | 5 |
| 04/04/2016 20:00 | 5 | 5 | 5 | 4 | 4 | 4 | 4 | 4 | 4 | 4 |
| 04/04/2016 21:00 | 4 | 4 | 4 | 4 | 4 | 4 | 4 | 3 | 3 | 3 |
| 04/04/2016 22:00 | 3 | 3 | 3 | 3 | 3 | 3 | 3 | 3 | 3 | 3 |
| 04/04/2016 23:00 | 3 | 3 | 3 | 3 | 3 | 3 | 3 | 3 | 3 | 3 |

**Daily Summary:**

| | |
|---|---|
| Average: | 5 |
| Minimum: | 1 |
| Maximum: | 9 |
| %SI: | 0 |

# Opacity Daily Summary Report

## Unit 6

From: 03/30/2016 00:00 To: 04/05/2016 23:59 Facility Name: Conesville Power Plant

Generated: 04/13/2016 10:05 Location: Conesville, OH

Tag Name: U6_Opac_Pct_6M

Value may not exceed: 20

Red - Invalid Data | Green - Edited Status | Blue - Edited Value | * - Excess Emission | # - Exclusion

| Date And Time | 00 | 06 | 12 | 18 | 24 | 30 | 36 | 42 | 48 | 54 |
|---|---|---|---|---|---|---|---|---|---|---|
| 04/05/2016 00:00 | 3 | 3 | 3 | 3 | 3 | 3 | 3 | 3 | 3 | 3 |
| 04/05/2016 01:00 | 3 | 3 | 3 | 3 | 3 | 3 | 3 | 3 | 3 | 3 |
| 04/05/2016 02:00 | 3 | 3 | 3 | 3 | 3 | 3 | 3 | 3 | 3 | 3 |
| 04/05/2016 03:00 | 3 | 3 | 3 | 3 | 3 | 3 | 3 | 3 | 3 | 3 |
| 04/05/2016 04:00 | 3 | 3 | 4 | 4 | 4 | 5 | 5 | 5 | 5 | 5 |
| 04/05/2016 05:00 | 5 | 5 | 6 | 6 | 7 | 7 | 8 | 9 | 10 | 9 |
| 04/05/2016 06:00 | 8 | 8 | 8 | 8 | 9 | 18 | 10 | 10 | 9 | 9 |
| 04/05/2016 07:00 | 9 | 8 | 8 | 8 | 8 | 9 | 9 | 8 | 8 | 8 |
| 04/05/2016 08:00 | 8 | 8 | 9 | 8 | 8 | 8 | 9 | 9 | 9 | 9 |
| 04/05/2016 09:00 | 9 | 8 | 8 | 8 | 8 | 8 | 8 | 8 | 8 | 8 |
| 04/05/2016 10:00 | 8 | 8 | 8 | 8 | 8 | 8 | 8 | 8 | 8 | 8 |
| 04/05/2016 11:00 | 8 | 9 | 8 | 8 | 8 | 9 | 9 | 8 | 9 | 8 |
| 04/05/2016 12:00 | 8 | 8 | 10 | 8 | 9 | 9 | 9 | 9 | 9 | 9 |
| 04/05/2016 13:00 | 9 | 9 | 9 | 9 | 9 | 15 | 10 | 10 | 9 | 9 |
| 04/05/2016 14:00 | 9 | 9 | 9 | 9 | 9 | 9 | 9 | 9 | 10 | 9 |
| 04/05/2016 15:00 | 9 | 9 | 9 | 9 | 9 | 9 | 9 | 9 | 9 | 9 |
| 04/05/2016 16:00 | 9 | 9 | 9 | 9 | 9 | 9 | 9 | 8 | 8 | 8 |
| 04/05/2016 17:00 | 7 | 7 | 7 | 6 | 6 | 6 | 6 | 6 | 6 | 6 |
| 04/05/2016 18:00 | 6 | 6 | 5 | 5 | 5 | 5 | 5 | 5 | 5 | 5 |
| 04/05/2016 19:00 | 5 | 5 | 5 | 5 | 5 | 5 | 5 | 5 | 5 | 5 |
| 04/05/2016 20:00 | 5 | 6 | 6 | 6 | 6 | 5 | 5 | 5 | 5 | 5 |
| 04/05/2016 21:00 | 5 | 5 | 5 | 5 | 5 | 5 | 5 | 5 | 5 | 5 |
| 04/05/2016 22:00 | 5 | 5 | 5 | 5 | 5 | 5 | 5 | 5 | 5 | 5 |
| 04/05/2016 23:00 | 5 | 5 | 5 | 5 | 5 | 5 | 5 | 5 | 5 | 5 |

Daily Summary:

| | |
|---|---|
| Average: | 6 |
| Minimum: | 3 |
| Maximum: | 15 |
| %SI: | 0 |