NOTES:

1. MADE IN THE U.S.A.
2. U.S. PATENT No. 5,863,128
3. U.S. No. 3,852,076 AND INTERNATIONAL REGISTERED TRADEMARKS
4. MATERIAL: GLASS FILLED POLYPROPYLENE (PP) OR POLYVINYLIDENE FLUORIDE (PVDF) OR ETHYLENE CHLOROTRIFLUOROETHYLENE (ECTFE)
5. INLET/OUTLET CONNECTION: 4" DIA, MNPT OR BSPT
6. SUCTION PORT CONNECTION: 2" MNPT
7. FOR INSTALLATION RECOMMENDATIONS REFER TO MAZZEI TECHNICAL BULLETINS No. 4, No. 5, No. 6, No. 10 AND No. 11, WHICH CAN BE FOUND IN THE "KNOWLEDGE CENTER" AT WWW.MAZZEI.NET.
8. MAZZEI INJECTOR CO., LLC.
   500 ROOSTER DR.
   BAKERSFIELD, CA 93307
   TEL: 661.363.6500
   WEB: WWW.MAZZEI.NET

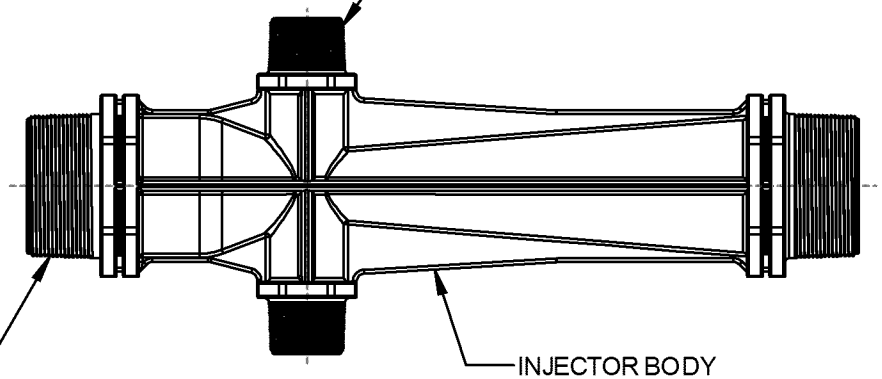

UNLESS OTHERWISE SPECIFIED DIMENSIONS ARE IN INCHES		mazzei	TITLE: 4" INJECTOR; MODEL 4091			
DRAWN:	J. PEREZ		DRAWING NO.: 4091 PP/PVDF/ECTFE			
DATE:	9/25/2014					
APPROVED:	T. JOHNS	SIZE: A	WEIGHT: N/A	SCALE: 1:6	REV.: NC	SHEET: 1 OF 2

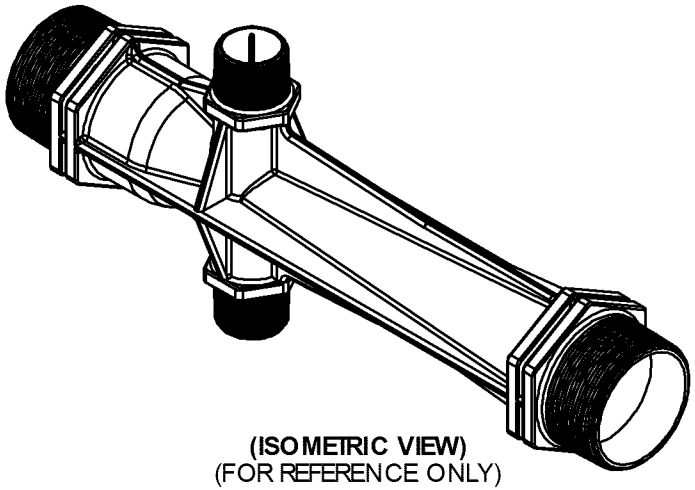

(ISOMETRIC VIEW)
(FOR REFERENCE ONLY)

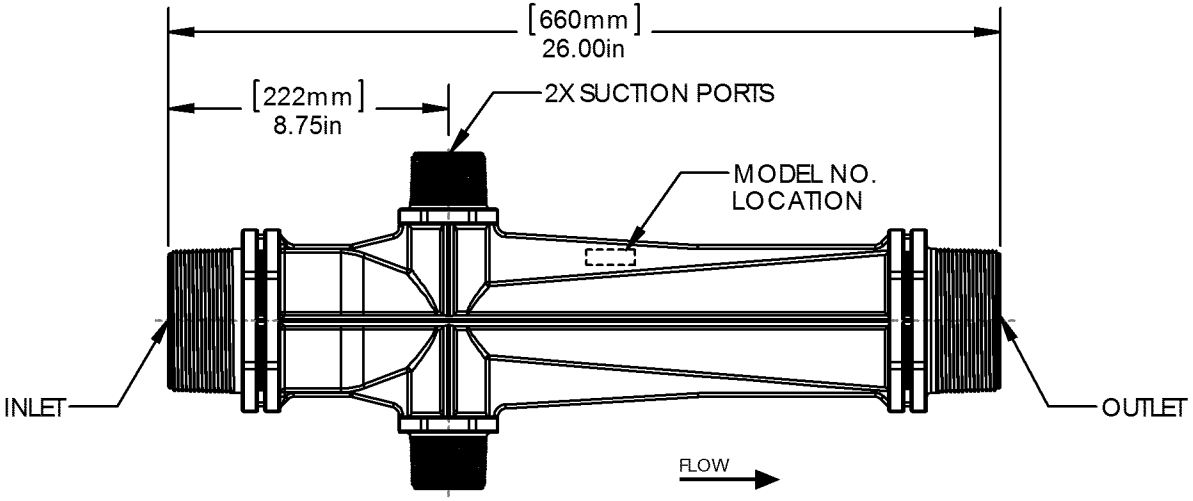

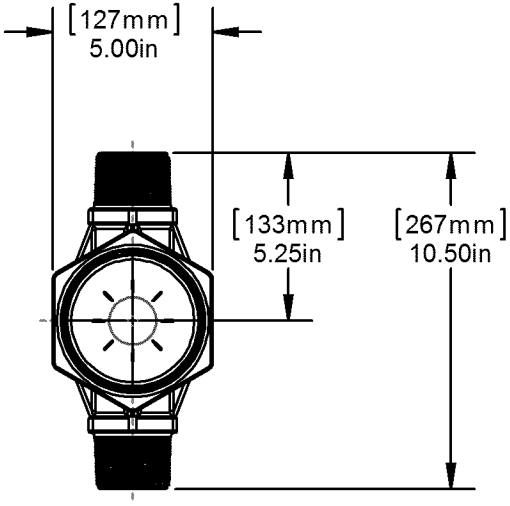

UNLESS OTHERWISE SPECIFIED DIMENSIONS ARE IN INCHES		Mazzei	TITLE: 4" INJECTOR; MODEL 4091			
DRAWN:	J. PEREZ					
DATE:	9/25/2014		DRAWING NO.: 4091 PP/PVDF/ECTFE			
APPROVED:	T. JOHNS	SIZE: A	WEIGHT: N/A	SCALE: 1:6	REV.: NC	SHEET: 2 OF 2

NOTES:

1. MATERIAL OF CONSTRUCTION: TYPE 316L, STAINLESS STEEL
2. MTR/HEAT NUMBERS ARE PROVIDED AND SHALL MEET APPLICABLE MATERIAL SPECIFICATIONS.
3. FLANGE BOLT HOLES TO STRADDLE COMMON CENTERLINES, UNLESS OTHERWISE NOTED.
4. INLET/OUTLET CONNECTION:
   4" DIA., ANSI B16.5, CLASS 150, SCHED. 40, RAISED FACE - WELD NECK FLANGE.
5. SUCTION PORT CONNECTION:
   3" DIA., ANSI B16.5, CLASS 150, SCHED. 40, RAISED FACE - WELD NECK FLANGE.
6. WELDING JOINTS TO BE COMPLETE JOINT PENETRATION, WHERE POSSIBLE.
7. DYE PENETRANT TESTING IN ACCORDANCE WITH ASME B31.3 NORMAL SERVICE RECOMMENDATIONS WILL BE PERFORMED ON A MINIMUM OF 20% OF LINEAR LENGTH OF WELDS; OR HYDROSTATIC TESTING WILL BE PERFORMED AS PART OF MAZZEI'S NON-DESTRUCTIVE TESTING PROCEDURE.
8. CLEANED FOR PASSIVATION PER ASTM A380 GUIDELINES.
9. PASSIVATED PER ASTM A967 SPECIFICATION.
10. WELD MAP, NON DESTRUCTIVE TESTING (NDT), CLEANING AND INSPECTION REPORTS TO BE PROVIDED BY MAZZEI.
11. MAZZEI RECOMMENDS INSTALLING THE INJECTOR IN A HORIZONTAL POSITION. INJECTORS MAY BE INSTALLED IN A VERTICAL POSITION WITH THE LIQUID FLOW UPWARDS. HOWEVER, IN CERTAIN APPLICATIONS THIS MAY AFFECT PERFORMANCE. PLEASE REFER TO MAZZEI TECHNICAL BULLETIN No. 11; *"MAZZEI INJECTOR INSTALLATION RECOMMENDATIONS FOR GAS TO LIQUID MIXING APPLICATIONS"*.

REVISIONS

REV.	DESCRIPTION	DATE	APPROVED
B	UPDATED NOTE 11.	5/6/2013	P. BANKOWSKI

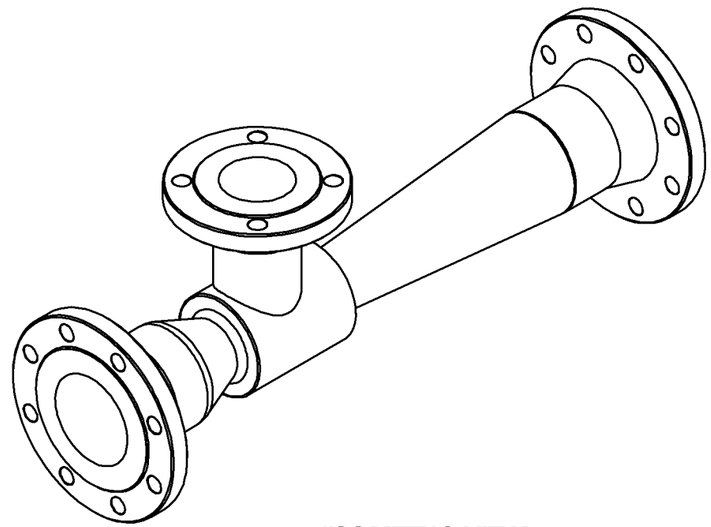

(ISOMETRIC VIEW)
(FOR REFERENCE ONLY)

SUBMITTAL DRAWING

SUBMITTAL NOTICE

ANY RECOMMENDATIONS FOR PRODUCT AND/OR SYSTEM DESIGN, WHETHER CONTAINED IN A DOCUMENT, WITHIN THIS DRAWING, COMMUNICATED BY ELECTRONIC MEANS OR GIVEN VERBALLY, ARE INTENDED SOLELY AS GUIDELINES TO ACTUAL SYSTEM DESIGN. SAID RECOMMENDATIONS ARE BASED UPON INFORMATION SUPPLIED BY OTHERS, THE ACCURACY OF WHICH IS BEYOND VERIFICATION BY MAZZEI INJECTOR CO. LLC. THEREFOR MAZZEI CANNOT AND DOES NOT WARRANT THE SUITABILITY OF ITS PRODUCTS FOR A PARTICULAR SERVICE NOR THE PERFORMANCE OF ANY SYSTEM CONTAINING COMPONENTS MADE OR SOLD BY MAZZEI.

CONFIDENTIALITY NOTICE

THE INFORMATION CONTAINED IN THIS DRAWING IS THE SOLE PROPERTY OF MAZZEI INJECTOR COMPANY LLC. ANY REPRODUCTION IN PART OR AS A WHOLE WITHOUT THE WRITTEN PERMISSION OF MAZZEI IS STRICTLY PROHIBITED.

DRAWING MAY NOT BE PRINTED FULL SIZE
DO NOT SCALE

UNLESS OTHERWISE SPECIFIED
DIM ARE IN INCHES
TOL ON ANGLE ± .1/2°
1 PL ± .125 2 PL ± .060 3 PL ± .030
INTERPRET DIM AND TOL PER
ASME Y14.5M-1994

THIRD ANGLE PROJECTION

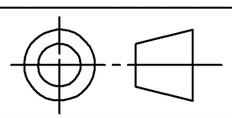

APPROVALS	DATE
DRAWN: T. JOHNS	12/28/2012
CHECKED: P. BANKOWSKI	12/28/2012
APPROVED: P. BANKOWSKI	12/28/2012
QA: -	
CUSTOMER APPROVAL: -	
CUSTOMER: NA	

MAZZEI INJECTOR CO., LLC
500 ROOSTER DRIVE BAKERSFIELD, CA 93307
PHONE: (661) 363-6500 FAX: (661)363-7500
WWW.MAZZEI.NET

TITLE: INJECTOR; MODEL SSF04091AAA00

SIZE:	JOB NO.:	DRAWING NUMBER:	REV:
B	NA	SSF04091AAA00-SUB	B

SCALE:	WEIGHT:	SHEET:
NONE	72 LBS	1 OF 2

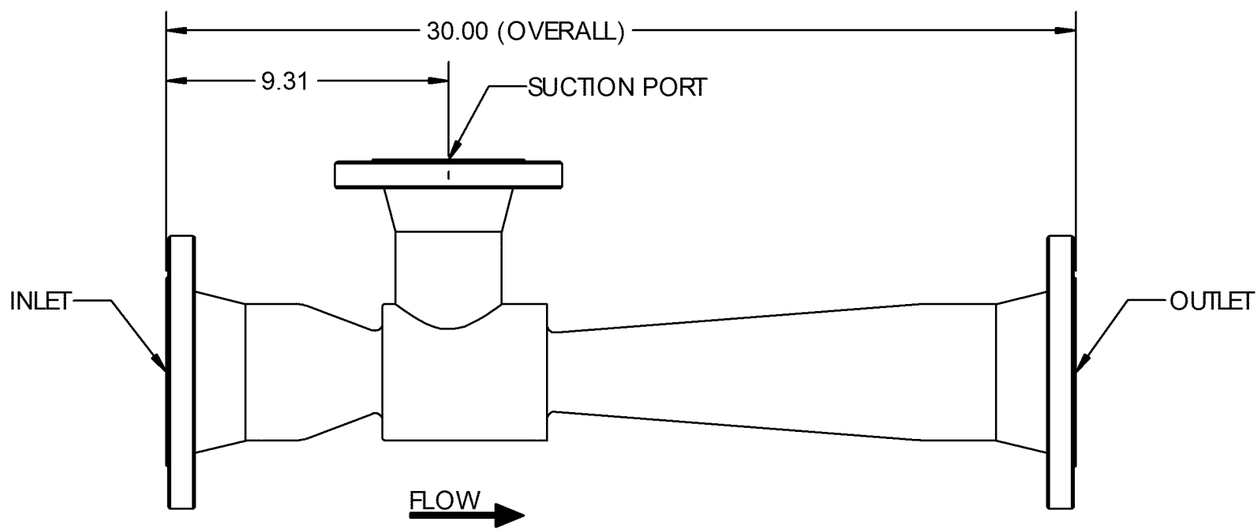

(SIDE VIEW)

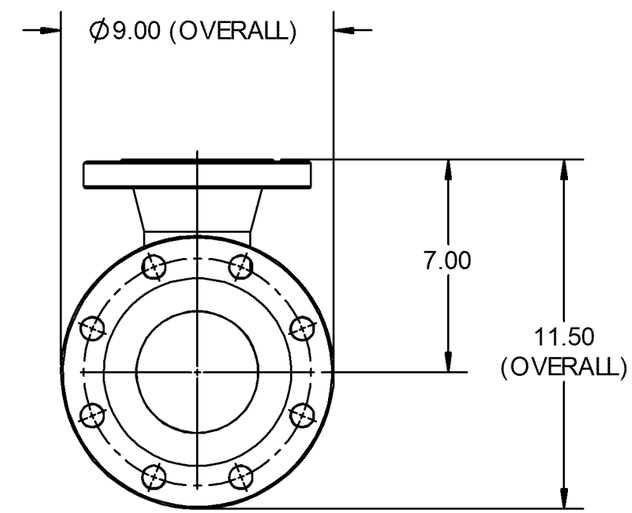

(END VIEW)

MAZZEI INJECTOR CO., LLC
500 ROOSTER DRIVE BAKERSFIELD, CA 93307
PHONE: (661) 363-6500 FAX: (661)363-7500
WWW.MAZZEI.NET

TITLE: INJECTOR; MODEL SSF04091AAA00

SIZE:	JOB NO.:	DRAWING NUMBER:	REV:
B	NA	SSF04091AAA00-SUB	B

SCALE:	WEIGHT:	SHEET:
1:5	72 LBS	2 OF 2

Injector Performance Table

Water Suction Capacity

Model 4091

Operating Pressure PSIG		WATER SUCTION	
Injector INLET	Injector OUTLET	Motive Flow GPM	*Water Suction* GPM
5	0	170	35
	1		25
	2		20
	3		14
	4	*(4.5)	6
10	0	214	47
	2		47
	5		31
	7		13
	8	*(8.8)	4
15	0	251	47
	5		47
	7		38
	10		12
	12	*(13.1)	6
20	0	272	47
	5		47
	10		45
	12		30
	15	*(17.5)	12
25	0	307	47
	5		47
	10		47
	15		33
	20	*(21.7)	7
30	0	332	47
	5		47
	10		47
	15		43
	20		23
	25	*(26.0)	4
35	0	360	47
	5		47
	10		47
	15		47
	20		44
	25	*(30.5)	24
40	0	382	47
	5		47
	10		47
	15		47
	20		47
	25		31
	30	*(35.0)	15
45	0	402	47
	5		47
	10		47
	15		47
	20		47
	25		47
	30		40
	35	*(38.9)	16
50	0	416	47
	5		47
	10		47
	15		47
	20		47
	25		47
	30		44
	35		27
	40	*(43.1)	6

Operating Pressure PSIG		WATER SUCTION	
Injector INLET	Injector OUTLET	Motive Flow GPM	*Water Suction* GPM
60	0	460	47
	5		47
	10		47
	15		47
	20		47
	30		47
	35		46
	40		42
	45	*(51.0)	28
70	0	495	46
	5		46
	10		46
	15		46
	20		46
	30		46
	40		46
	45		46
	50		31
	55	*(60.5)	16
80	0	532	45
	5		45
	10		45
	15		45
	20		45
	30		45
	40		45
	50		45
	60		30
	65	*(69.5)	14
90	0	569	42
	5		42
	10		42
	20		42
	30		42
	40		42
	50		40
	60		39
	70		28
	75	*(79.1)	14
100	0	600	42
	5		42
	10		42
	20		42
	30		42
	40		42
	50		42
	60		42
	70		39
	80	*(88.6)	15

**NUMBERS IN PARENTHESIS indicate the injector outlet pressure when suction stops (Zero Suction Point).*

Copyright© 2014 REV 2014

Mazzei Injector Company, LLC
500 Rooster Drive, Bakersfield, CA 93307-9555 USA
TEL 661.363.6500 • FAX 661.363.7500 • www.mazzei.net

Injector Performance Table

Water Suction Capacity - METRIC

Model 4091

Operating Pressure kg/cm²		WATER SUCTION	
Injector Inlet	Injector Outlet	Motive Flow l/min	*Water Suction* l/min
0.35	0.00	643	132
	0.07		94.6
	0.14		75.7
	0.21		53.0
	0.28	*(0.32)	22.7
0.70	0.00	810	177
	0.14		177
	0.35		117
	0.49		49.2
	0.56	*(0.62)	15.1
1.05	0.00	950	177
	0.35		177
	0.49		143
	0.70		45.4
	0.84	*(0.92)	22.7
1.41	0.00	1,030	177
	0.35		177
	0.70		170
	0.84		113
	1.05	*(1.23)	45.4
1.76	0.00	1,162	177
	0.35		177
	0.70		177
	1.05		124
	1.41	*(1.53)	26.5
2.11	0.00	1,257	177
	0.35		177
	0.70		177
	1.05		162
	1.41		87.1
	1.76	*(1.83)	15.1
2.46	0.00	1,363	177
	0.35		177
	0.70		177
	1.05		177
	1.41		166
	1.76	*(2.14)	90.8
2.81	0.00	1,446	177
	0.35		177
	0.70		177
	1.05		177
	1.41		177
	1.76		117
	2.11	*(2.46)	56.8
3.16	0.00	1,522	177
	0.35		177
	0.70		177
	1.05		177
	1.41		177
	1.76		177
	2.11		151
	2.46	*(2.73)	60.6
3.52	0.00	1,575	177
	0.35		177
	0.70		177
	1.05		177
	1.41		177
	1.76		177
	2.11		166
	2.46		102
	2.81	*(3.03)	22.7

Operating Pressure kg/cm²		WATER SUCTION	
Injector Inlet	Injector Outlet	Motive Flow l/min	*Water Suction* l/min
4.22	0.00	1,741	177
	0.35		177
	0.70		177
	1.05		177
	1.41		177
	2.11		177
	2.46		174
	2.81		159
	3.16	*(3.59)	106
4.92	0.00	1,874	174
	0.35		174
	0.70		174
	1.05		174
	1.41		174
	2.11		174
	2.81		174
	3.16		174
	3.52		117
	3.87	*(4.25)	60.6
5.62	0.00	2,014	170
	0.35		170
	0.70		170
	1.05		170
	1.41		170
	2.11		170
	2.81		170
	3.52		170
	4.22		113
	4.57	*(4.89)	53.0
6.33	0.00	2,154	159
	0.35		159
	0.70		159
	1.41		159
	2.11		159
	2.81		159
	3.52		151
	4.22		147
	4.92		106
	5.27	*(5.56)	53.0
7.03	0.00	2,271	159
	0.35		159
	0.70		159
	1.41		159
	2.11		159
	2.81		159
	3.52		159
	4.22		159
	4.92		147
	5.62	*(6.23)	56.8

**NUMBERS IN PARENTHESIS indicate the injector outlet pressure when suction stops (Zero Suction Point).*

Copyright© 2014 REV 2014

Mazzei Injector Company, LLC
500 Rooster Drive, Bakersfield, CA 93307-9555 USA
TEL 661.363.6500 • FAX 661.363.7500 • www.mazzei.net

Injector Performance Table

Air Suction Capacity

Model 4091

Operating Pressure PSIG		AIR SUCTION	
Injector INLET	Injector OUTLET	Motive Flow GPM	*Air Suction* SCFM
5	0	131	20.0
	1		19.1
	2		17.4
	3		15.6
	4	*(4.5)	10.3
10	0	186	30.5
	2		21.7
	5		15.7
	7		14.4
	8	*(6.8)	12.0
15	0	227	39.2
	5		21.6
	7		18.6
	10		10.6
	12	*(13.1)	6.4
20	0	263	37.8
	5		26.2
	10		13.4
	12		11.6
	15	*(17.5)	8.8
25	0	294	39.8
	5		28.1
	10		19.4
	15		10.5
	20	*(21.7)	7.9
30	0	322	42.7
	5		29.7
	10		21.1
	15		15.3
	20		10.4
	25	*(26.0)	7.2
35	0	347	45.7
	5		37.5
	10		29.9
	15		20.0
	20		13.1
	25	*(30.5)	10.3
40	0	371	47.6
	5		40.3
	10		31.5
	15		21.8
	20		15.5
	25		11.2
	30	*(35.0)	9.0
45	0	394	51.9
	5		43.6
	10		37.1
	15		26.8
	20		19.8
	25		14.2
	30		11.6
	35	*(38.9)	9.9
50	0	415	52.3
	5		49.0
	10		43.5
	15		30.8
	20		22.2
	25		17.8
	30		13.7
	35		10.0
	40	*(43.1)	7.5

Operating Pressure PSIG		AIR SUCTION	
Injector INLET	Injector OUTLET	Motive Flow GPM	*Air Suction* SCFM
60	0	455	65.4
	5		63.0
	10		57.2
	20		38.3
	25		27.4
	30		23.5
	35		17.7
	40		12.0
	45	*(51.0)	8.5

**NUMBERS IN PARENTHESIS indicate the injector outlet pressure when suction stops (Zero Suction Point).*

Copyright© 2014 REV 2014

Mazzei Injector Company, LLC
500 Rooster Drive, Bakersfield, CA 93307-9555 USA
TEL 661.363.6500 • FAX 661.363.7500 • www.mazzei.net

Injector Performance Table

Air Suction Capacity - METRIC

Model 4091

Operating Pressure kg/cm²		AIR SUCTION	
Injector INLET	Injector OUTLET	Motive Flow l/min	*Air Suction* l/min
0.35	0.00	497	566
	0.07		543
	0.14		493
	0.21		444
	0.28	*(0.32)	291
0.70	0.00	703	863
	0.14		615
	0.35		446
	0.49		409
	0.56	*(0.62)	341
1.05	0.00	861	1,111
	0.35		613
	0.49		527
	0.70		301
	0.84	*(0.92)	183
1.41	0.00	994	1,073
	0.35		742
	0.70		380
	0.84		330
	1.05	*(1.23)	251
1.76	0.00	1,111	1,127
	0.35		798
	0.70		550
	1.05		299
	1.41	*(1.53)	224
2.11	0.00	1,217	1,210
	0.35		842
	0.70		597
	1.05		434
	1.41		296
	1.76	*(1.83)	206
2.46	0.00	1,315	1,295
	0.35		1,063
	0.70		847
	1.05		568
	1.41		371
	1.76	*(2.14)	292
2.81	0.00	1,406	1,349
	0.35		1,143
	0.70		894
	1.05		618
	1.41		439
	1.76		319
	2.11	*(2.46)	255
3.16	0.00	1,491	1,469
	0.35		1,236
	0.70		1,050
	1.05		760
	1.41		561
	1.76		402
	2.11		330
	2.46	*(2.73)	283
3.52	0.00	1,572	1,482
	0.35		1,387
	0.70		1,231
	1.05		873
	1.41		629
	1.76		504
	2.11		389
	2.46		285
	2.81	*(3.03)	212

Operating Pressure kg/cm²		AIR SUCTION	
Injector INLET	Injector OUTLET	Motive Flow l/min	*Air Suction* l/min
4.22	0.00	1,722	1,852
	0.70		1,621
	1.05		1,387
	1.41		1,086
	1.76		776
	2.11		668
	2.46		502
	2.81		339
	3.16	*(3.59)	242

**NUMBERS IN PARENTHESIS indicate the injector outlet pressure when suction stops (Zero Suction Point).*

Copyright© 2014 REV 2014

Mazzei Injector Company, LLC
500 Rooster Drive, Bakersfield, CA 93307-9555 USA
TEL 661.363.6500 • FAX 661.363.7500 • www.mazzei.net