REV.NO.	DESCRIPTION	PREVIOUS DWG	BY	DATE

ITEM	QTY.	REF.	DESCRIPTION

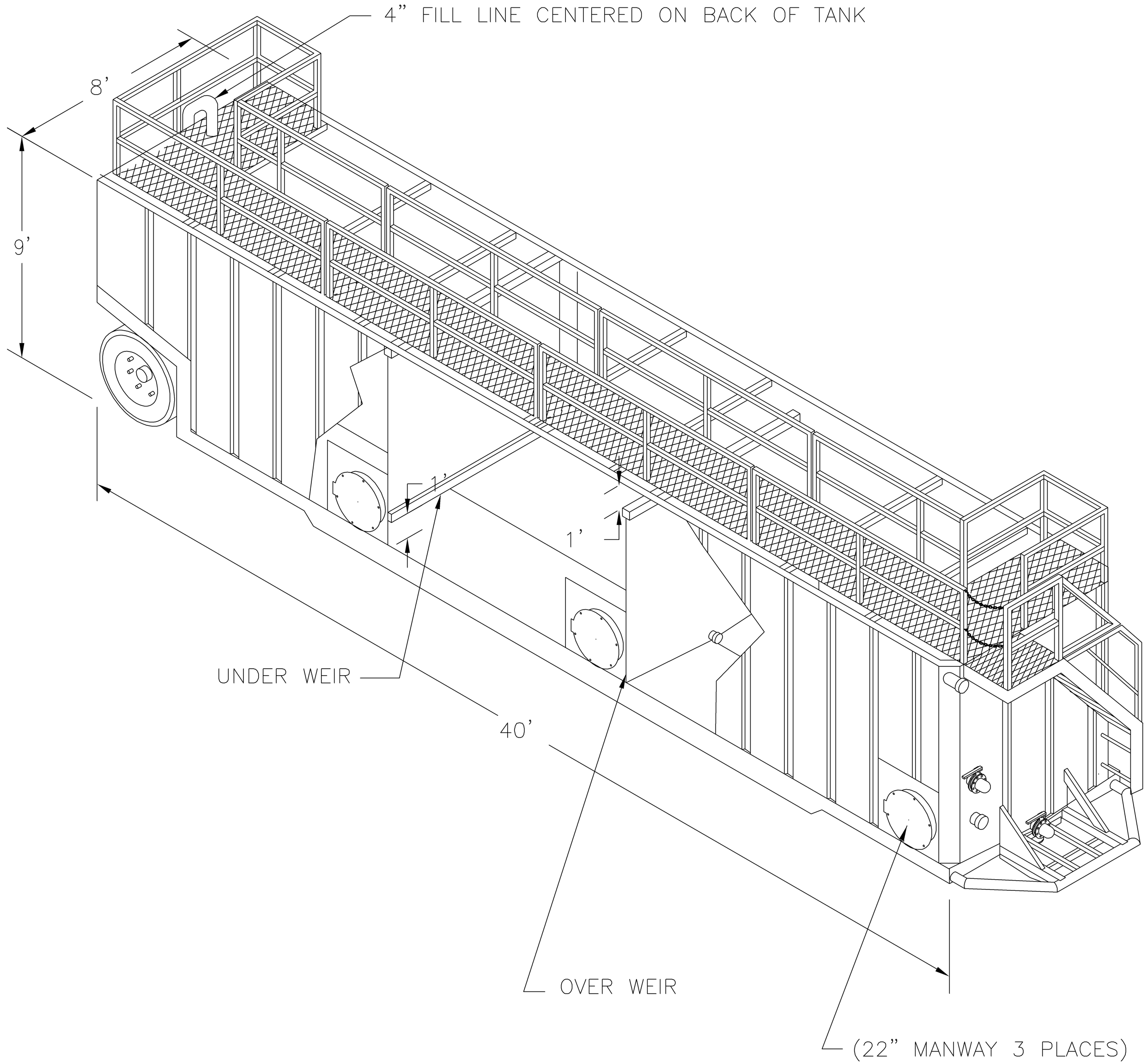

DATE: 1-1-2002
SCALE: FULL
DESIGNED:
CHECKED:
DRAWN: DRAWN
SHEET SIZE D

WEIR TANK

18,100 GALLON WORKSAFE TANK

DETAIL

Rain For Rent
Engineering
3404 STATE ROAD PO BOX 2248 BAKERSFIELD CA 93303

ALL INFORMATION CONTAINED IN OR DISCLOSED BY THIS DOCUMENT IS CONSIDERED CONFIDENTIAL AND PROPRIETARY BY RAIN FOR RENT. ALL DISCLOSURES OF DESIGN INFORMATION AND REPRODUCTION OF THIS DOCUMENT AND ALL SALES RIGHTS ARE EXCLUSIVELY RESERVED BY AND TO RAIN FOR RENT AND COMMUNICATION OF THIS INFORMATION TO OTHERS IS PROHIBITED WITHOUT THE PRIOR WRITTEN CONSENT OF RAIN FOR RENT

1 SHEET OF 1

DRAWING NUMBER
103422

JOB NUMBER
1030004

2016-010025-0000949

BF 400
Up to 400 GPM

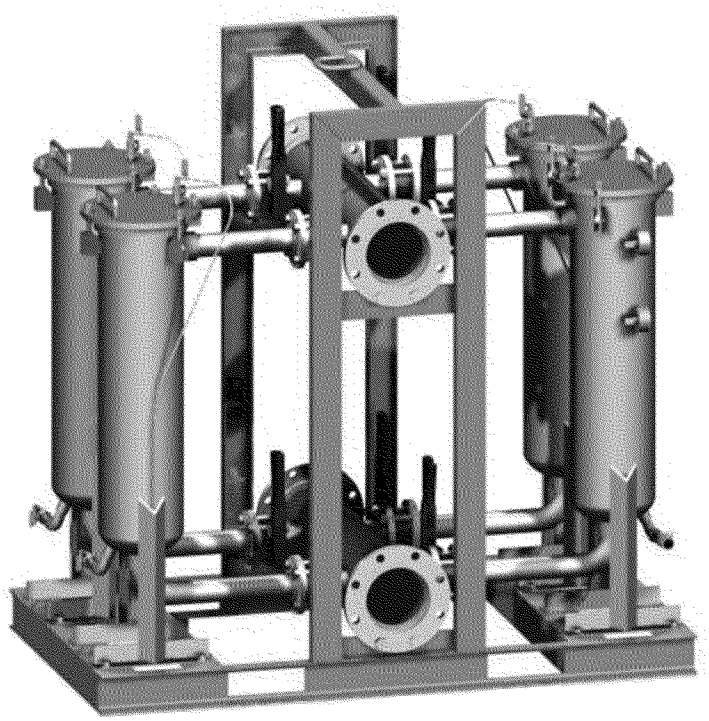

Features

- Manifold connections are 6" 150 lb flanges
- Quadruple bag filter
- Bag filter for high solids holding capacity
- Replaceable bag filters from 100 to 1 micron nominal rating
- No moving parts
- Skid mounted

Technical

- Bag filter chambers connect in parallel
- Units are fitted with bleed valves and pressure gauges
- System can stand alone for sediment removal or be used in combination with filter equipment
- Footprint: 62" long x 36" wide x 61" high
- Dry weight: 1,150 lbs.

Material Specifications

- Chambers constructed of 304 Stainless Steel
- Piping constructed of 304 stainless steel
- Each bag filter chamber holds one (1) 7" x 30" double- stitched filter bag
- Maximum operating pressure: 125psi
- Stainless Steel inlet and outlet manifolds

Available Accessories

- Power Prime Pumps
- Spill Guard Containment berms
- Stainless Steel 304 and Carbon Steel storage tanks in
- Bi-Level, Mixer, Weir and Manifold configurations
- Polyethylene storage tanks
- Cartridge and bag filters
- HDPE pipe and fittings
- Roll off boxes, dewatering bins and vacuum boxes
- Flow meters and pressure reducing/ sustaining valves
- Aluminum Victaulic pipe and fittings
- Suction and discharge hose

Rain for Rent
P.O. Box 2248
Bakersfield CA 93303
800-742-7246
661-393-1542
FAX 661-393-1542
www.rainforrent.com
info@rainforrent.com

Rain for Rent is a registered trademark of Western Oilfields Supply Company. Features and Specifications are subject to change without notice.

POWER PRIME PUMPS

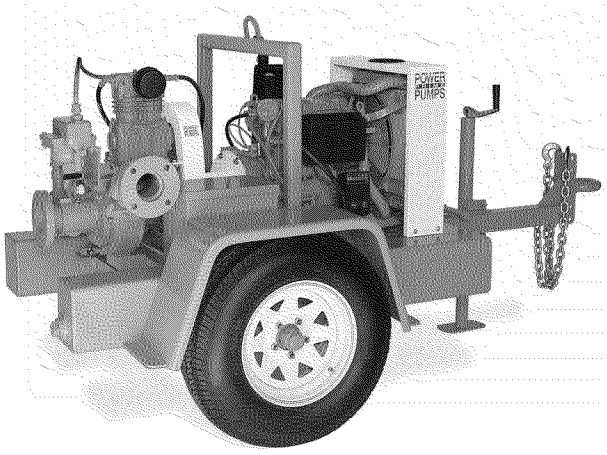

DV-80 Vacuum Assist Self-Priming Pump

DV-80

SIZE 3" x 3"

- 500 GPM MAX
- 138 FT HEAD MAX

POWER PRIME™ PUMPS

FEATURES

- Solids handling capabilities to 1-¼" diameter maximum
- Continuous self priming
- Runs dry unattended
- Suction lift to 28'
- Skid or trailer mounted
- Stainless Steel Pump Options

TECHNICAL

- The DV-80 is flex coupled to a Deutz F3M1008 3-cylinder diesel engine producing 15.75 HP @ 2800 rpm.
- The engine is 12 volt electric start with control panel.
- The pump and engine are skid or trailer mounted with lifting bracket and integral 24-hour minimum capacity fuel tank.
- Belt-driven compressor is fitted to operate the air-ejector priming system.
- Other makes of diesel engines and electric power options are available.

MATERIAL SPECIFICATIONS

- Standard build: cast iron wet end, with open impellers and replaceable wear plates.
- The mechanical seal, with solid silicon carbide mating faces, is lubricated in an oil bath.
- Suction and discharge flanges are 3" ANSI 150# FF.

Performance Curve for DV-200

Flows Indicated Are At 10' Suction Lift In Clean Water

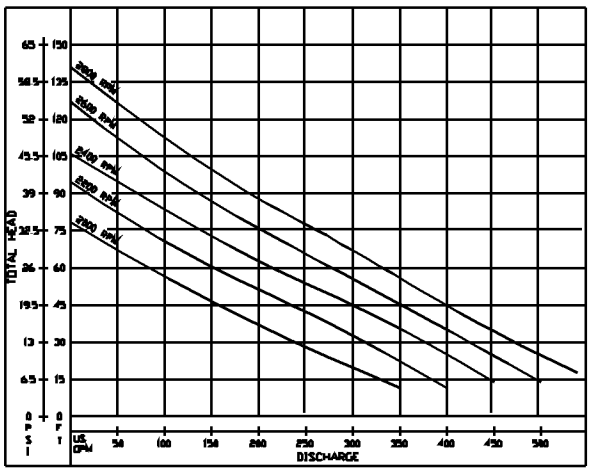

Flows given in American Gallons Per Minute

Fuel consumption: 0.96 GPH @ 2,800 RPM

PPP-DV080-250-01/00

POWER PRIME

www.powerprime.com • sales@powerprime.com

PO Box 2248 • Bakersfield, CA 93303-2248

(800) 647-7246 • (661) 399-9058 • FAX (661) 399-3374

RAIN FOR RENT

Spillguard™
Portable Containment Berms

FEATURES

- Lightweight
- Compact
- Portable
- Durable
- No Inflation Necessary, Sets Up in Minutes
- Heavy Duty, Chemical Resistant Materials

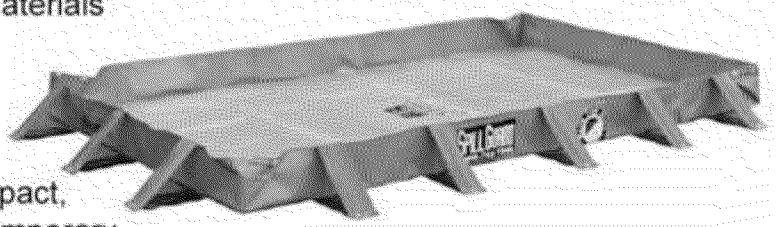

TECHNICAL

The SPILLGUARD™ berm is a compact, portable system ideal for use with temporary liquid storage tanks, pumps, or other equipment used in handling hazardous materials. The SPILLGUARD™ berm can be set up in minutes. The patented, collapsible walls and light-weight materials allow for quick deployment. Tough, one piece construction, reinforced seams, and chemically resistant materials give extra protection under field conditions.

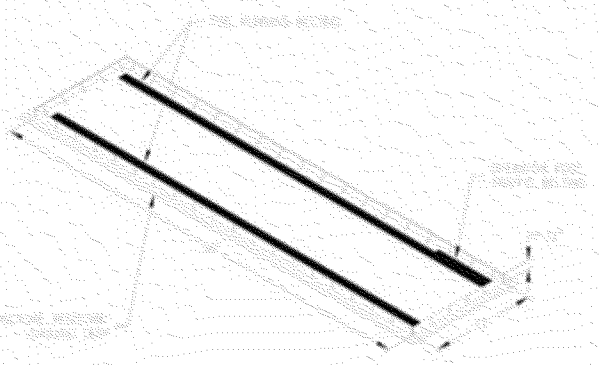

MATERIAL SPECIFICATIONS

The SPILLGUARD™ berm is manufactured of heavy duty 35 mil polyurethane coated fabric that offers excellent chemical resistance characteristics and durability. The unique design, patented collapsible walls, and compact size allow for convenient storage. SPILLGUARD™ units are available in a variety of sizes and can be made to fit specific applications. The heavy duty ground tarp and traffic belting supplied with the unit gives the drive-on capabilities and operator safety. Chemical and environmental resistance data available upon request.

Rain for Rent
P.O Box 2248 • Bakersfield, CA 93303
800-742-7246 • rainforrent.com

RAIN FOR RENT