NOTES:

1. MADE IN THE U.S.A.
2. U.S. PATENT No. 5,863,128
3. U.S. No. 3,852,076 AND INTERNATIONAL REGISTERED TRADEMARKS
4. MATERIAL: GLASS FILLED POLYPROPYLENE (PP) OR POLYVINYLIDENE FLUORIDE (PVDF) OR ETHYLENE CHLOROTRIFLUOROETHYLENE (ECTFE)
5. INLET/OUTLET CONNECTION: 4" DIA, MNPT OR BSPT
6. SUCTION PORT CONNECTION: 2" MNPT
7. FOR INSTALLATION RECOMMENDATIONS REFER TO MAZZEI TECHNICAL BULLETINS No. 4, No. 5, No. 6, No. 10 AND No. 11, WHICH CAN BE FOUND IN THE "KNOWLEDGE CENTER" AT WWW.MAZZEI.NET.
8. MAZZEI INJECTOR CO., LLC.
   500 ROOSTER DR.
   BAKERSFIELD, CA 93307
   TEL: 661.363.6500
   WEB: WWW.MAZZEI.NET

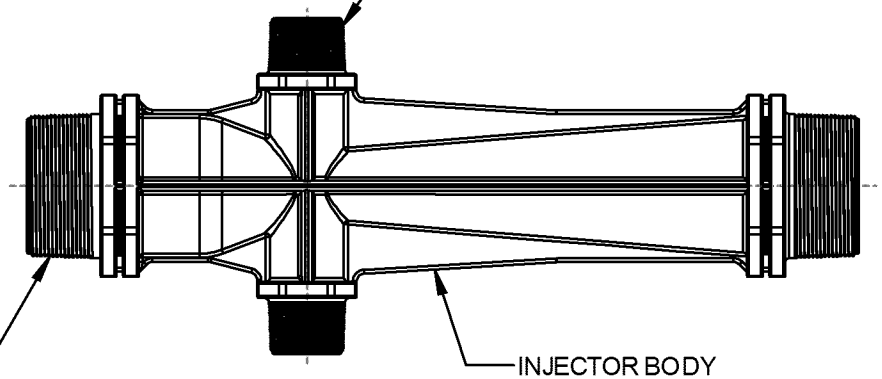


| | | | | | | |
|---|---|---|---|---|---|---|
| UNLESS OTHERWISE SPECIFIED DIMENSIONS ARE IN INCHES | | mazzei | TITLE: 4" INJECTOR; MODEL 4091 | | | |
| DRAWN: | J. PEREZ | | DRAWING NO.: 4091 PP/PVDF/ECTFE | | | |
| DATE: | 9/25/2014 | | | | | |
| APPROVED: | T. JOHNS | SIZE: A | WEIGHT: N/A | SCALE: 1:6 | REV.: NC | SHEET: 1 OF 2 |

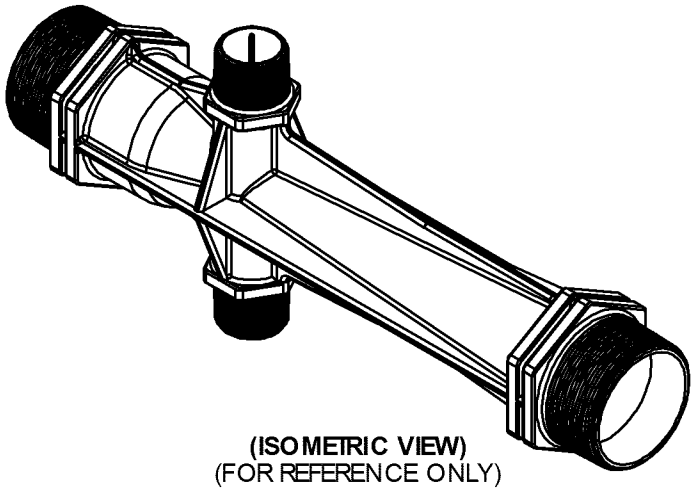

**(ISOMETRIC VIEW)**
(FOR REFERENCE ONLY)

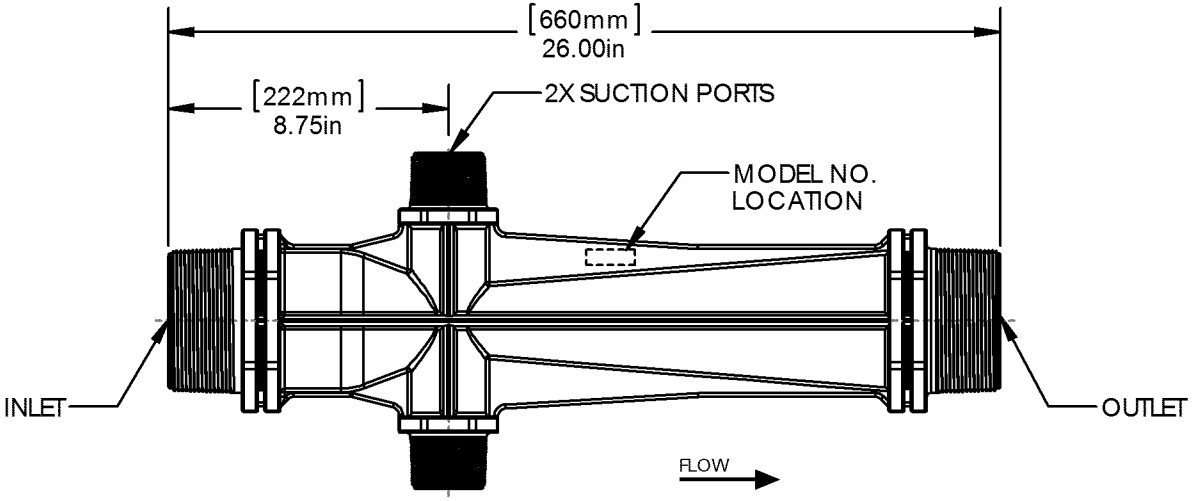


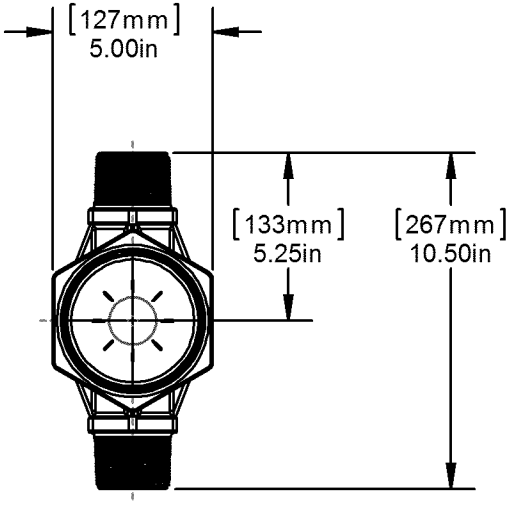


| | | | | | | |
|---|---|---|---|---|---|---|
| UNLESS OTHERWISE SPECIFIED DIMENSIONS ARE IN INCHES | | Mazzei | TITLE: 4" INJECTOR; MODEL 4091 | | | |
| DRAWN: | J. PEREZ | | | | | |
| DATE: | 9/25/2014 | | DRAWING NO.: 4091 PP/PVDF/ECTFE | | | |
| APPROVED: | T. JOHNS | SIZE: A | WEIGHT: N/A | SCALE: 1:6 | REV.: NC | SHEET: 2 OF 2 |

NOTES:

1. MATERIAL OF CONSTRUCTION: TYPE 316L, STAINLESS STEEL
2. MTR/HEAT NUMBERS ARE PROVIDED AND SHALL MEET APPLICABLE MATERIAL SPECIFICATIONS.
3. FLANGE BOLT HOLES TO STRADDLE COMMON CENTERLINES, UNLESS OTHERWISE NOTED.
4. INLET/OUTLET CONNECTION:
   4" DIA., ANSI B16.5, CLASS 150, SCHED. 40, RAISED FACE - WELD NECK FLANGE.
5. SUCTION PORT CONNECTION:
   3" DIA., ANSI B16.5, CLASS 150, SCHED. 40, RAISED FACE - WELD NECK FLANGE.
6. WELDING JOINTS TO BE COMPLETE JOINT PENETRATION, WHERE POSSIBLE.
7. DYE PENETRANT TESTING IN ACCORDANCE WITH ASME B31.3 NORMAL SERVICE RECOMMENDATIONS WILL BE PERFORMED ON A MINIMUM OF 20% OF LINEAR LENGTH OF WELDS; OR HYDROSTATIC TESTING WILL BE PERFORMED AS PART OF MAZZEI'S NON-DESTRUCTIVE TESTING PROCEDURE.
8. CLEANED FOR PASSIVATION PER ASTM A380 GUIDELINES.
9. PASSIVATED PER ASTM A967 SPECIFICATION.
10. WELD MAP, NON DESTRUCTIVE TESTING (NDT), CLEANING AND INSPECTION REPORTS TO BE PROVIDED BY MAZZEI.
11. MAZZEI RECOMMENDS INSTALLING THE INJECTOR IN A HORIZONTAL POSITION. INJECTORS MAY BE INSTALLED IN A VERTICAL POSITION WITH THE LIQUID FLOW UPWARDS. HOWEVER, IN CERTAIN APPLICATIONS THIS MAY AFFECT PERFORMANCE. PLEASE REFER TO MAZZEI TECHNICAL BULLETIN No. 11; *"MAZZEI INJECTOR INSTALLATION RECOMMENDATIONS FOR GAS TO LIQUID MIXING APPLICATIONS"*.

**REVISIONS**

| REV. | DESCRIPTION | DATE | APPROVED |
|---|---|---|---|
| B | UPDATED NOTE 11. | 5/6/2013 | P. BANKOWSKI |

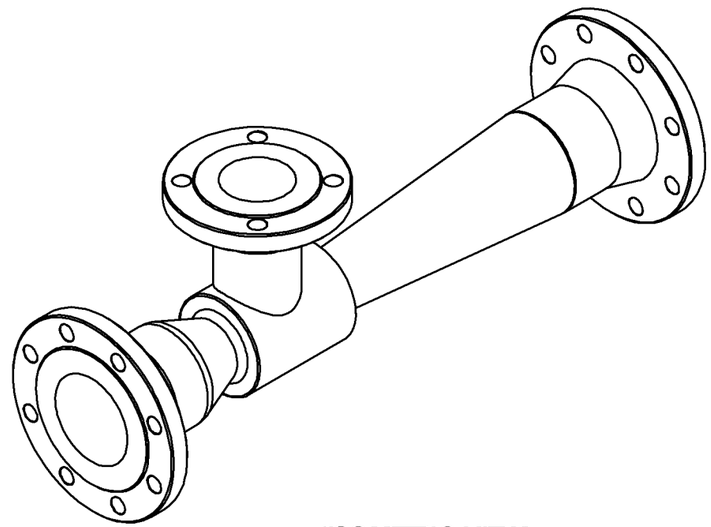

**(ISOMETRIC VIEW)**
(FOR REFERENCE ONLY)

## SUBMITTAL DRAWING

**SUBMITTAL NOTICE**

ANY RECOMMENDATIONS FOR PRODUCT AND/OR SYSTEM DESIGN, WHETHER CONTAINED IN A DOCUMENT, WITHIN THIS DRAWING, COMMUNICATED BY ELECTRONIC MEANS OR GIVEN VERBALLY, ARE INTENDED SOLELY AS GUIDELINES TO ACTUAL SYSTEM DESIGN. SAID RECOMMENDATIONS ARE BASED UPON INFORMATION SUPPLIED BY OTHERS, THE ACCURACY OF WHICH IS BEYOND VERIFICATION BY MAZZEI INJECTOR CO. LLC. THEREFOR MAZZEI CANNOT AND DOES NOT WARRANT THE SUITABILITY OF ITS PRODUCTS FOR A PARTICULAR SERVICE NOR THE PERFORMANCE OF ANY SYSTEM CONTAINING COMPONENTS MADE OR SOLD BY MAZZEI.

**CONFIDENTIALITY NOTICE**

THE INFORMATION CONTAINED IN THIS DRAWING IS THE SOLE PROPERTY OF MAZZEI INJECTOR COMPANY LLC. ANY REPRODUCTION IN PART OR AS A WHOLE WITHOUT THE WRITTEN PERMISSION OF MAZZEI IS STRICTLY PROHIBITED.

DRAWING MAY NOT BE PRINTED FULL SIZE
DO NOT SCALE

UNLESS OTHERWISE SPECIFIED
DIM ARE IN INCHES
TOL ON ANGLE ± .1/2°
1 PL ± .125 2 PL ± .060 3 PL ± .030
INTERPRET DIM AND TOL PER
ASME Y14.5M-1994

**THIRD ANGLE PROJECTION**

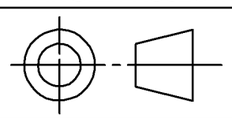

| APPROVALS | DATE |
|---|---|
| DRAWN: T. JOHNS | 12/28/2012 |
| CHECKED: P. BANKOWSKI | 12/28/2012 |
| APPROVED: P. BANKOWSKI | 12/28/2012 |
| QA: - | |
| CUSTOMER APPROVAL: - | |
| CUSTOMER: NA | |

**MAZZEI INJECTOR CO., LLC**
500 ROOSTER DRIVE BAKERSFIELD, CA 93307
PHONE: (661) 363-6500 FAX: (661)363-7500
WWW.MAZZEI.NET

TITLE: INJECTOR; MODEL SSF04091AAA00

| SIZE: | JOB NO.: | DRAWING NUMBER: | REV: |
|---|---|---|---|
| B | NA | SSF04091AAA00-SUB | B |

| SCALE: | WEIGHT: | SHEET: |
|---|---|---|
| NONE | 72 LBS | 1 OF 2 |

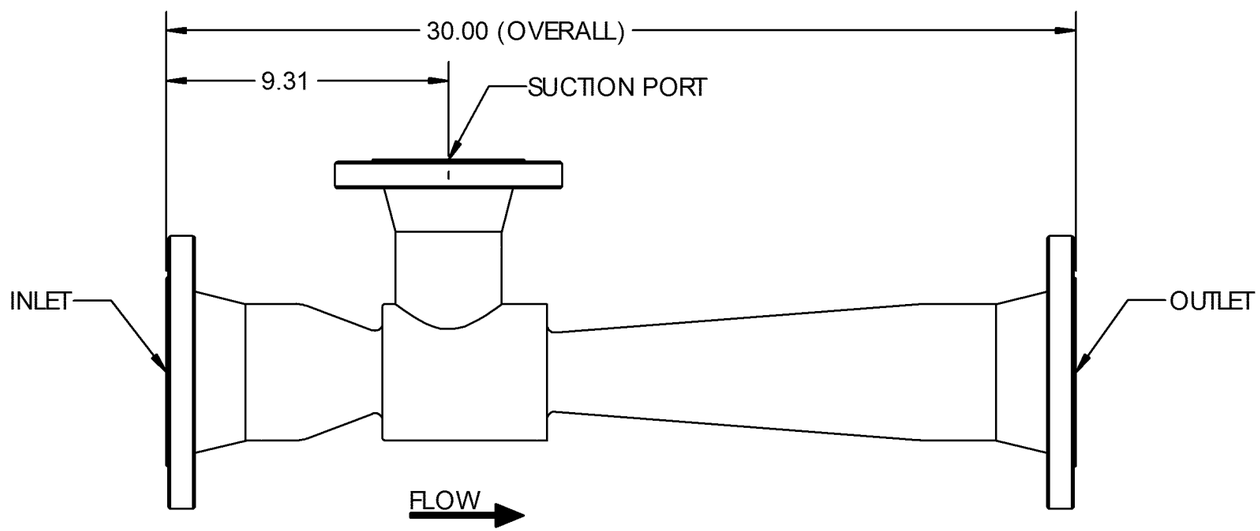


**(SIDE VIEW)**

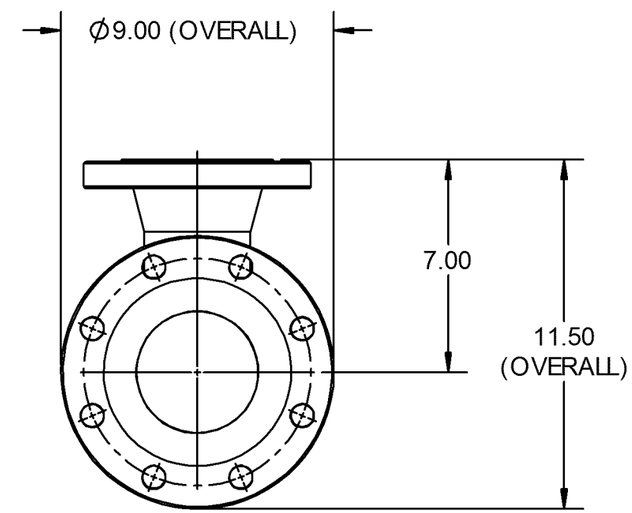


**(END VIEW)**

**MAZZEI INJECTOR CO., LLC**
500 ROOSTER DRIVE BAKERSFIELD, CA 93307
PHONE: (661) 363-6500 FAX: (661)363-7500
WWW.MAZZEI.NET

TITLE: INJECTOR; MODEL SSF04091AAA00

| SIZE: | JOB NO.: | DRAWING NUMBER: | REV: |
|---|---|---|---|
| B | NA | SSF04091AAA00-SUB | B |

| SCALE: | WEIGHT: | SHEET: |
|---|---|---|
| 1:5 | 72 LBS | 2 OF 2 |

# Injector Performance Table

## Water Suction Capacity

## Model 4091

| Operating Pressure PSIG | | WATER SUCTION | |
|---|---|---|---|
| Injector INLET | Injector OUTLET | Motive Flow GPM | *Water Suction* GPM |
| 5 | 0 | 170 | 35 |
| | 1 | | 25 |
| | 2 | | 20 |
| | 3 | | 14 |
| | 4 | *(4.5) | 6 |
| 10 | 0 | 214 | 47 |
| | 2 | | 47 |
| | 5 | | 31 |
| | 7 | | 13 |
| | 8 | *(8.8) | 4 |
| 15 | 0 | 251 | 47 |
| | 5 | | 47 |
| | 7 | | 38 |
| | 10 | | 12 |
| | 12 | *(13.1) | 6 |
| 20 | 0 | 272 | 47 |
| | 5 | | 47 |
| | 10 | | 45 |
| | 12 | | 30 |
| | 15 | *(17.5) | 12 |
| 25 | 0 | 307 | 47 |
| | 5 | | 47 |
| | 10 | | 47 |
| | 15 | | 33 |
| | 20 | *(21.7) | 7 |
| 30 | 0 | 332 | 47 |
| | 5 | | 47 |
| | 10 | | 47 |
| | 15 | | 43 |
| | 20 | | 23 |
| | 25 | *(26.0) | 4 |
| 35 | 0 | 360 | 47 |
| | 5 | | 47 |
| | 10 | | 47 |
| | 15 | | 47 |
| | 20 | | 44 |
| | 25 | *(30.5) | 24 |
| 40 | 0 | 382 | 47 |
| | 5 | | 47 |
| | 10 | | 47 |
| | 15 | | 47 |
| | 20 | | 47 |
| | 25 | | 31 |
| | 30 | *(35.0) | 15 |
| 45 | 0 | 402 | 47 |
| | 5 | | 47 |
| | 10 | | 47 |
| | 15 | | 47 |
| | 20 | | 47 |
| | 25 | | 47 |
| | 30 | | 40 |
| | 35 | *(38.9) | 16 |
| 50 | 0 | 416 | 47 |
| | 5 | | 47 |
| | 10 | | 47 |
| | 15 | | 47 |
| | 20 | | 47 |
| | 25 | | 47 |
| | 30 | | 44 |
| | 35 | | 27 |
| | 40 | *(43.1) | 6 |

| Operating Pressure PSIG | | WATER SUCTION | |
|---|---|---|---|
| Injector INLET | Injector OUTLET | Motive Flow GPM | *Water Suction* GPM |
| 60 | 0 | 460 | 47 |
| | 5 | | 47 |
| | 10 | | 47 |
| | 15 | | 47 |
| | 20 | | 47 |
| | 30 | | 47 |
| | 35 | | 46 |
| | 40 | | 42 |
| | 45 | *(51.0) | 28 |
| 70 | 0 | 495 | 46 |
| | 5 | | 46 |
| | 10 | | 46 |
| | 15 | | 46 |
| | 20 | | 46 |
| | 30 | | 46 |
| | 40 | | 46 |
| | 45 | | 46 |
| | 50 | | 31 |
| | 55 | *(60.5) | 16 |
| 80 | 0 | 532 | 45 |
| | 5 | | 45 |
| | 10 | | 45 |
| | 15 | | 45 |
| | 20 | | 45 |
| | 30 | | 45 |
| | 40 | | 45 |
| | 50 | | 45 |
| | 60 | | 30 |
| | 65 | *(69.5) | 14 |
| 90 | 0 | 569 | 42 |
| | 5 | | 42 |
| | 10 | | 42 |
| | 20 | | 42 |
| | 30 | | 42 |
| | 40 | | 42 |
| | 50 | | 40 |
| | 60 | | 39 |
| | 70 | | 28 |
| | 75 | *(79.1) | 14 |
| 100 | 0 | 600 | 42 |
| | 5 | | 42 |
| | 10 | | 42 |
| | 20 | | 42 |
| | 30 | | 42 |
| | 40 | | 42 |
| | 50 | | 42 |
| | 60 | | 42 |
| | 70 | | 39 |
| | 80 | *(88.6) | 15 |

**NUMBERS IN PARENTHESIS indicate the injector outlet pressure when suction stops (Zero Suction Point).*

Copyright© 2014 REV 2014

Mazzei Injector Company, LLC
500 Rooster Drive, Bakersfield, CA 93307-9555 USA
TEL 661.363.6500 • FAX 661.363.7500 • www.mazzei.net

# Injector Performance Table

## Water Suction Capacity - METRIC

## Model 4091

| Operating Pressure kg/cm² | | WATER SUCTION | |
|---|---|---|---|
| Injector Inlet | Injector Outlet | Motive Flow l/min | *Water Suction* l/min |
| 0.35 | 0.00 | 643 | 132 |
| | 0.07 | | 94.6 |
| | 0.14 | | 75.7 |
| | 0.21 | | 53.0 |
| | 0.28 | *(0.32) | 22.7 |
| 0.70 | 0.00 | 810 | 177 |
| | 0.14 | | 177 |
| | 0.35 | | 117 |
| | 0.49 | | 49.2 |
| | 0.56 | *(0.62) | 15.1 |
| 1.05 | 0.00 | 950 | 177 |
| | 0.35 | | 177 |
| | 0.49 | | 143 |
| | 0.70 | | 45.4 |
| | 0.84 | *(0.92) | 22.7 |
| 1.41 | 0.00 | 1,030 | 177 |
| | 0.35 | | 177 |
| | 0.70 | | 170 |
| | 0.84 | | 113 |
| | 1.05 | *(1.23) | 45.4 |
| 1.76 | 0.00 | 1,162 | 177 |
| | 0.35 | | 177 |
| | 0.70 | | 177 |
| | 1.05 | | 124 |
| | 1.41 | *(1.53) | 26.5 |
| 2.11 | 0.00 | 1,257 | 177 |
| | 0.35 | | 177 |
| | 0.70 | | 177 |
| | 1.05 | | 162 |
| | 1.41 | | 87.1 |
| | 1.76 | *(1.83) | 15.1 |
| 2.46 | 0.00 | 1,363 | 177 |
| | 0.35 | | 177 |
| | 0.70 | | 177 |
| | 1.05 | | 177 |
| | 1.41 | | 166 |
| | 1.76 | *(2.14) | 90.8 |
| 2.81 | 0.00 | 1,446 | 177 |
| | 0.35 | | 177 |
| | 0.70 | | 177 |
| | 1.05 | | 177 |
| | 1.41 | | 177 |
| | 1.76 | | 117 |
| | 2.11 | *(2.46) | 56.8 |
| 3.16 | 0.00 | 1,522 | 177 |
| | 0.35 | | 177 |
| | 0.70 | | 177 |
| | 1.05 | | 177 |
| | 1.41 | | 177 |
| | 1.76 | | 177 |
| | 2.11 | | 151 |
| | 2.46 | *(2.73) | 60.6 |
| 3.52 | 0.00 | 1,575 | 177 |
| | 0.35 | | 177 |
| | 0.70 | | 177 |
| | 1.05 | | 177 |
| | 1.41 | | 177 |
| | 1.76 | | 177 |
| | 2.11 | | 166 |
| | 2.46 | | 102 |
| | 2.81 | *(3.03) | 22.7 |

| Operating Pressure kg/cm² | | WATER SUCTION | |
|---|---|---|---|
| Injector Inlet | Injector Outlet | Motive Flow l/min | *Water Suction* l/min |
| 4.22 | 0.00 | 1,741 | 177 |
| | 0.35 | | 177 |
| | 0.70 | | 177 |
| | 1.05 | | 177 |
| | 1.41 | | 177 |
| | 2.11 | | 177 |
| | 2.46 | | 174 |
| | 2.81 | | 159 |
| | 3.16 | *(3.59) | 106 |
| 4.92 | 0.00 | 1,874 | 174 |
| | 0.35 | | 174 |
| | 0.70 | | 174 |
| | 1.05 | | 174 |
| | 1.41 | | 174 |
| | 2.11 | | 174 |
| | 2.81 | | 174 |
| | 3.16 | | 174 |
| | 3.52 | | 117 |
| | 3.87 | *(4.25) | 60.6 |
| 5.62 | 0.00 | 2,014 | 170 |
| | 0.35 | | 170 |
| | 0.70 | | 170 |
| | 1.05 | | 170 |
| | 1.41 | | 170 |
| | 2.11 | | 170 |
| | 2.81 | | 170 |
| | 3.52 | | 170 |
| | 4.22 | | 113 |
| | 4.57 | *(4.89) | 53.0 |
| 6.33 | 0.00 | 2,154 | 159 |
| | 0.35 | | 159 |
| | 0.70 | | 159 |
| | 1.41 | | 159 |
| | 2.11 | | 159 |
| | 2.81 | | 159 |
| | 3.52 | | 151 |
| | 4.22 | | 147 |
| | 4.92 | | 106 |
| | 5.27 | *(5.56) | 53.0 |
| 7.03 | 0.00 | 2,271 | 159 |
| | 0.35 | | 159 |
| | 0.70 | | 159 |
| | 1.41 | | 159 |
| | 2.11 | | 159 |
| | 2.81 | | 159 |
| | 3.52 | | 159 |
| | 4.22 | | 159 |
| | 4.92 | | 147 |
| | 5.62 | *(6.23) | 56.8 |

**NUMBERS IN PARENTHESIS indicate the injector outlet pressure when suction stops (Zero Suction Point).*

Copyright© 2014 REV 2014

Mazzei Injector Company, LLC
500 Rooster Drive, Bakersfield, CA 93307-9555 USA
TEL 661.363.6500 • FAX 661.363.7500 • www.mazzei.net

# Injector Performance Table

## *Air Suction Capacity*

# Model 4091

| Operating Pressure PSIG | | AIR SUCTION | |
|---|---|---|---|
| Injector INLET | Injector OUTLET | Motive Flow GPM | *Air Suction* SCFM |
| 5 | 0 | 131 | 20.0 |
| | 1 | | 19.1 |
| | 2 | | 17.4 |
| | 3 | | 15.6 |
| | 4 | *(4.5) | 10.3 |
| 10 | 0 | 186 | 30.5 |
| | 2 | | 21.7 |
| | 5 | | 15.7 |
| | 7 | | 14.4 |
| | 8 | *(6.8) | 12.0 |
| 15 | 0 | 227 | 39.2 |
| | 5 | | 21.6 |
| | 7 | | 18.6 |
| | 10 | | 10.6 |
| | 12 | *(13.1) | 6.4 |
| 20 | 0 | 263 | 37.8 |
| | 5 | | 26.2 |
| | 10 | | 13.4 |
| | 12 | | 11.6 |
| | 15 | *(17.5) | 8.8 |
| 25 | 0 | 294 | 39.8 |
| | 5 | | 28.1 |
| | 10 | | 19.4 |
| | 15 | | 10.5 |
| | 20 | *(21.7) | 7.9 |
| 30 | 0 | 322 | 42.7 |
| | 5 | | 29.7 |
| | 10 | | 21.1 |
| | 15 | | 15.3 |
| | 20 | | 10.4 |
| | 25 | *(26.0) | 7.2 |
| 35 | 0 | 347 | 45.7 |
| | 5 | | 37.5 |
| | 10 | | 29.9 |
| | 15 | | 20.0 |
| | 20 | | 13.1 |
| | 25 | *(30.5) | 10.3 |
| 40 | 0 | 371 | 47.6 |
| | 5 | | 40.3 |
| | 10 | | 31.5 |
| | 15 | | 21.8 |
| | 20 | | 15.5 |
| | 25 | | 11.2 |
| | 30 | *(35.0) | 9.0 |
| 45 | 0 | 394 | 51.9 |
| | 5 | | 43.6 |
| | 10 | | 37.1 |
| | 15 | | 26.8 |
| | 20 | | 19.8 |
| | 25 | | 14.2 |
| | 30 | | 11.6 |
| | 35 | *(38.9) | 9.9 |
| 50 | 0 | 415 | 52.3 |
| | 5 | | 49.0 |
| | 10 | | 43.5 |
| | 15 | | 30.8 |
| | 20 | | 22.2 |
| | 25 | | 17.8 |
| | 30 | | 13.7 |
| | 35 | | 10.0 |
| | 40 | *(43.1) | 7.5 |

| Operating Pressure PSIG | | AIR SUCTION | |
|---|---|---|---|
| Injector INLET | Injector OUTLET | Motive Flow GPM | *Air Suction* SCFM |
| 60 | 0 | 455 | 65.4 |
| | 5 | | 63.0 |
| | 10 | | 57.2 |
| | 20 | | 38.3 |
| | 25 | | 27.4 |
| | 30 | | 23.5 |
| | 35 | | 17.7 |
| | 40 | | 12.0 |
| | 45 | *(51.0) | 8.5 |

**NUMBERS IN PARENTHESIS indicate the injector outlet pressure when suction stops (Zero Suction Point).*

Copyright© 2014 REV 2014

Mazzei Injector Company, LLC
500 Rooster Drive, Bakersfield, CA 93307-9555 USA
TEL 661.363.6500 • FAX 661.363.7500 • www.mazzei.net

# Injector Performance Table

## *Air Suction Capacity - METRIC*

## Model 4091

| Operating Pressure kg/cm² | | AIR SUCTION | |
|---|---|---|---|
| Injector INLET | Injector OUTLET | Motive Flow l/min | *Air Suction* l/min |
| 0.35 | 0.00 | 497 | 566 |
| | 0.07 | | 543 |
| | 0.14 | | 493 |
| | 0.21 | | 444 |
| | 0.28 | *(0.32) | 291 |
| 0.70 | 0.00 | 703 | 863 |
| | 0.14 | | 615 |
| | 0.35 | | 446 |
| | 0.49 | | 409 |
| | 0.56 | *(0.62) | 341 |
| 1.05 | 0.00 | 861 | 1,111 |
| | 0.35 | | 613 |
| | 0.49 | | 527 |
| | 0.70 | | 301 |
| | 0.84 | *(0.92) | 183 |
| 1.41 | 0.00 | 994 | 1,073 |
| | 0.35 | | 742 |
| | 0.70 | | 380 |
| | 0.84 | | 330 |
| | 1.05 | *(1.23) | 251 |
| 1.76 | 0.00 | 1,111 | 1,127 |
| | 0.35 | | 798 |
| | 0.70 | | 550 |
| | 1.05 | | 299 |
| | 1.41 | *(1.53) | 224 |
| 2.11 | 0.00 | 1,217 | 1,210 |
| | 0.35 | | 842 |
| | 0.70 | | 597 |
| | 1.05 | | 434 |
| | 1.41 | | 296 |
| | 1.76 | *(1.83) | 206 |
| 2.46 | 0.00 | 1,315 | 1,295 |
| | 0.35 | | 1,063 |
| | 0.70 | | 847 |
| | 1.05 | | 568 |
| | 1.41 | | 371 |
| | 1.76 | *(2.14) | 292 |
| 2.81 | 0.00 | 1,406 | 1,349 |
| | 0.35 | | 1,143 |
| | 0.70 | | 894 |
| | 1.05 | | 618 |
| | 1.41 | | 439 |
| | 1.76 | | 319 |
| | 2.11 | *(2.46) | 255 |
| 3.16 | 0.00 | 1,491 | 1,469 |
| | 0.35 | | 1,236 |
| | 0.70 | | 1,050 |
| | 1.05 | | 760 |
| | 1.41 | | 561 |
| | 1.76 | | 402 |
| | 2.11 | | 330 |
| | 2.46 | *(2.73) | 283 |
| 3.52 | 0.00 | 1,572 | 1,482 |
| | 0.35 | | 1,387 |
| | 0.70 | | 1,231 |
| | 1.05 | | 873 |
| | 1.41 | | 629 |
| | 1.76 | | 504 |
| | 2.11 | | 389 |
| | 2.46 | | 285 |
| | 2.81 | *(3.03) | 212 |

| Operating Pressure kg/cm² | | AIR SUCTION | |
|---|---|---|---|
| Injector INLET | Injector OUTLET | Motive Flow l/min | *Air Suction* l/min |
| 4.22 | 0.00 | 1,722 | 1,852 |
| | 0.70 | | 1,621 |
| | 1.05 | | 1,387 |
| | 1.41 | | 1,086 |
| | 1.76 | | 776 |
| | 2.11 | | 668 |
| | 2.46 | | 502 |
| | 2.81 | | 339 |
| | 3.16 | *(3.59) | 242 |

**NUMBERS IN PARENTHESIS indicate the injector outlet pressure when suction stops (Zero Suction Point).*

Copyright© 2014 REV 2014

Mazzei Injector Company, LLC
500 Rooster Drive, Bakersfield, CA 93307-9555 USA
TEL 661.363.6500 • FAX 661.363.7500 • www.mazzei.net