RK
& ASSOCIATES, INC.

January 18, 2016

R11379-2.5

Compliance Tracker, AE-17J
Air Enforcement and Compliance Assurance Branch
US Environmental Protection Agency - Region 5
77 W Jackson Boulevard
Chicago, IL 60604

Particulate and Metals Emission Test Report
Behr Iron & Metal – 1100 Seminary Street – Rockford, Illinois 61104

To Whom This May Concern:

Please find attached a Emissions Testing Report for the measurement of particulate and metals emission rates at Behr Iron & Metal, Inc. (Behr), in Rockford, Illinois.

Certification Statement:

I certify under penalty of law that I have examined and am familiar with the information in the enclosed documents, including all attachments. Based on my inquiry of those individuals with primary responsibility for obtaining the information, I certify that the statements and information are, to the best of my knowledge and belief, true and complete. I am aware that there are significant penalties for knowingly submitting false statements and information including the possibility of fines or imprisonment pursuant to Section 113(c)(2) of the Clean Air Act and 18 U.S.C. §§ 1001 and 1341.

Signature: _____ Date: 1/18/2016

Name: Ron Coupar

Attachment: Particulate and Metals Emissions Testing Protocol
Behr Iron *& metals, Inc. – Rockford, Illinois
Dated August 26, 2015

If you have any questions, or require any additional information please do not hesitate to contact Mr. Ron Coupar, EHS Manager for Behr at 815-987-2770 (rcoupar@jbehr.com) or me at 630-393-9000 (jpinion@rka-inc.com).

Yours very truly,
RK & Associates, Inc.

John G. Pinion
Associate Engineer

cc: Mr. Ron Coupar – EHS Manager – Behr Iron & Metal – Rockford, Illinois

2 SOUTH 631 ROUTE 59; SUITE B
WARRENVILLE, IL 60555
(630) 393-9000
FAX (630) 393-9111

This Page Left Blank

Emission Test Report
Particulate and Metals Emissions

Behr Iron & Metal – Rockford, Illinois
Site Identification No.: 201030AB

January 19, 2016

R11379-2.5

Prepared for:
Behr Iron & Metal
1100 Seminary Street
Rockford, Illinois 61104
Attn: Mr. Ron Coupar – EHS Manager

Submitted to:
Compliance Tracker, AE-17J
Air Enforcement and Compliance Assurance Branch
US Environmental Protection Agency
Region 5
77 W Jackson Boulevard
Chicago, IL 60604

RK & Associates, Inc.
2 South 631 Route 59
Suite B
Warrenville, Illinois 60555
Phone: 630-393-9000
Fax: 630-393-9111

This Page Left Blank

TABLE OF CONTENTS

1.0 SUMMARY OF RESULTS 1
- 1.1 Introduction 1
  - 1.1.1 Facility Location 1
  - 1.1.2 Facility Contact Information 1
- 1.2 Summary of Testing Program 1
  - 1.2.1 Blue Baghouse Emission Testing 5
  - 1.2.2 Northwest Baghouse Emission Testing 5
  - 1.2.3 Emission Testing of Rotary Dryer Primary Exhaust Discharging to TPU Baghouse 8
- 1.3 Test Errors 10
- 1.4 Test Deviations 10
- 1.5 Production Data 10

2.0 FACILITY OPERATIONS 11
- 2.1 Process and Control Equipment Descriptions 11
- 2.2 Operating Parameters of Baghouses and Associated Equipment 11
- 2.3 Facility Operating Parameters 11

3.0 SAMPLING AND ANALYTICAL PROCEDURES 13
- 3.1 Sampling Point Locations and Cross Sections 13
- 3.2 Sampling Point Descriptions 13
- 3.3 Sampling and Analytical Procedures 13
- 3.4 Deviations from Sampling and Analytical Procedures 13
- 3.5 Quality Control / Quality Assurance Procedures 13

FIGURES

Figure 1-1. Site Location Map 3
Figure 1-2. Site Layout Diagram – Quaker Road Location 4
Figure 1-3. Summary of PM and Metals Emission Testing of the Blue Baghouse 6
Figure 1-4. Summary of PM and Metals Emission Testing of the Northwest Baghouse 7
Figure 1-5. Summary of PM and Metals Emission Testing of the Primary Dryer Exhaust Discharging Through the TPU Baghouse 9

TABLE OF CONTENTS

TABLES

Table 1-1 Summary of PM and Metals Emission Testing of Inlet/Outlet of Blue Baghouse

Table 1-2 Summary of Unit Operations for Emission Sources Controlled by the Blue Baghouse

Table 1-3 Summary of PM and Metals Emission Testing of Inlet/Outlet of the Northwest Baghouse

Table 1-4 Summary of Unit Operations for Emission Sources Controlled by the Northwest Baghouse

Table 1-5 Summary of Worst Case PM and Pb Emissions from the Northwest Baghouse

Table 1-6 Summary of PM and Metals Emission Testing of the Rotary Dryer Primary Exhaust Controlled by the Blue Baghouse

Table 1-7 Summary of Unit Operations for the Rotary Dryer

APPENDICES

Appendix A Test Protocol with Process Descriptions

Appendix B Particulate Matter and Trace Metal Emissions Test Report - Blue Baghouse

Appendix C Particulate Matter and Trace Metal Emissions Test Report – Northwest Baghouse

Appendix D Particulate Matter and Trace Metal Emissions Test Report – TPU Baghouse

Appendix E Method 29 Audit Sample Report

1.0 TESTING SUMMARY

1.1 Introduction

Behr Iron & Metal (Behr) is an existing scrap metal recycling facility located at 1100 Seminary Street and 208 Quaker Road in Rockford, Illinois (see Figure 1). Behr collects and segregates non-ferrous mixed metal scrap, primarily aluminum, stainless steels, brass, copper, and lead to create uniform grades of scrap for sale. Existing scrap handling and processing activities include sorting, bailing, briquette forming, sand separation, thermal cleaning and metal refining.

Behr Rockford currently operates under an Illinois Environmental Protection Agency (IEPA) Lifetime Operating Permit (Application No. 85030079; Site ID No. 201030AYB) most recently revised and reissued on May 29, 2008.

1.1.1 Facility Location

The emission units discussed herein are located at 1100 Seminary Street in the city of Rockford, Illinois as shown in Figure 1. A Facility Layout map is presented in Figures 2. Facility contact information is provided in Section 1.2 below.

1.1.2 Facility Contact Information

Business Name:	Behr Iron & Metal
Source Location:	**1100 Seminary Street – Rockford, Illinois 61104** Rockford Northwest Township - Winnebago County Illinois
Latitude/Longitude	42° 15' 21.40" N / 89° 05" 33.05" W – Front Gate
Office/Mailing Address:	1100 Seminary Street, Rockford, Illinois 61104
Facility Contact:	**Mr. Ron Coupar – EHS Manager** **815-987-2770 – rcoupar@behrim.com**
IEPA Site ID No.:	201030AYB
SIC Code:	5093 – Scrap and Waste Materials
NAICS Code:	423930 – Recyclable Material Merchant Wholesalers
Emission Testing Contractor	Mostardi Platt Environmental Services
RKA Contact for Emission Testing	John Pinion 630-393-9000 jpinion@rka-inc.com 2S631 Route 59, Suite B Warrenville, Illinois 60555

1.2 Summary of Testing Program

Behr received a Request for Additional Information from the USEPA requiring that Behr conduct emission testing to quantify particulate matter and metals emissions from the baghouses used to control emissions from selected emission unit located at Behr's Seminary Street facility.

Specifically, USEPA is required Behr to…

> *"…quantify the mass emission rate of metals and particulate matter and test for opacity by performing inlet (only at baghouses) and outlet testing using EPA Reference Methods 1 through 5, 9, and 29 (excluding analysis for mercury, at the following emission units:"*

i.	*Lead Pot 2*	*vi.*	*Thermal Reduction Unit 1*
ii.	*Lead Pot 3*	*vii.*	*Thermal Reduction Unit 2*
iii.	*Babbitt Pot*	*viii.*	*Particulate Vent Room (Doghouse)*
iv.	*Foundry Sand Separator*	*ix.*	*Rotary Dryer*
v.	*Sweeco Separator*		

Subsequently, USEPA clarified the above requirement to specify that testing was required only at the inlet and outlet of the three baghouses (Blue Baghouse, TPU Baghouse, and Northwest Baghouse) that control emissions from identified emission units. Accordingly, the emissions data generated by this testing program do not identify emission rates from individual emission units, but only identify the total uncontrolled emission loading at the inlet of the each baghouse and the total controlled emission rate from each baghouse.

The illustration below identifies the three baghouses and the emission units controlled by each. The emission unit numbers assigned below are the same numbers USEPA used to identify the emission units in the Request of Additional Information. The order in which the emission units are listed has been changed to more clearly identify the relationship between emission units and baghouses.

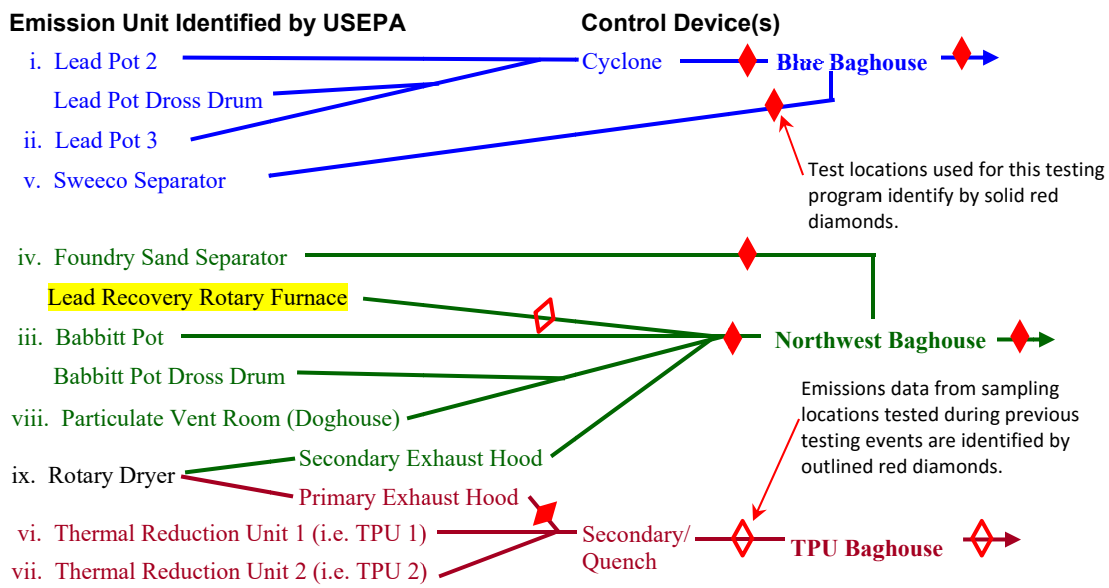

A detailed process description for each emission unit is presented in the Test Protocol presented in Appendix X of test report. A facility layout map showing the location of the emission units and control equipment is presented in Figure 2.

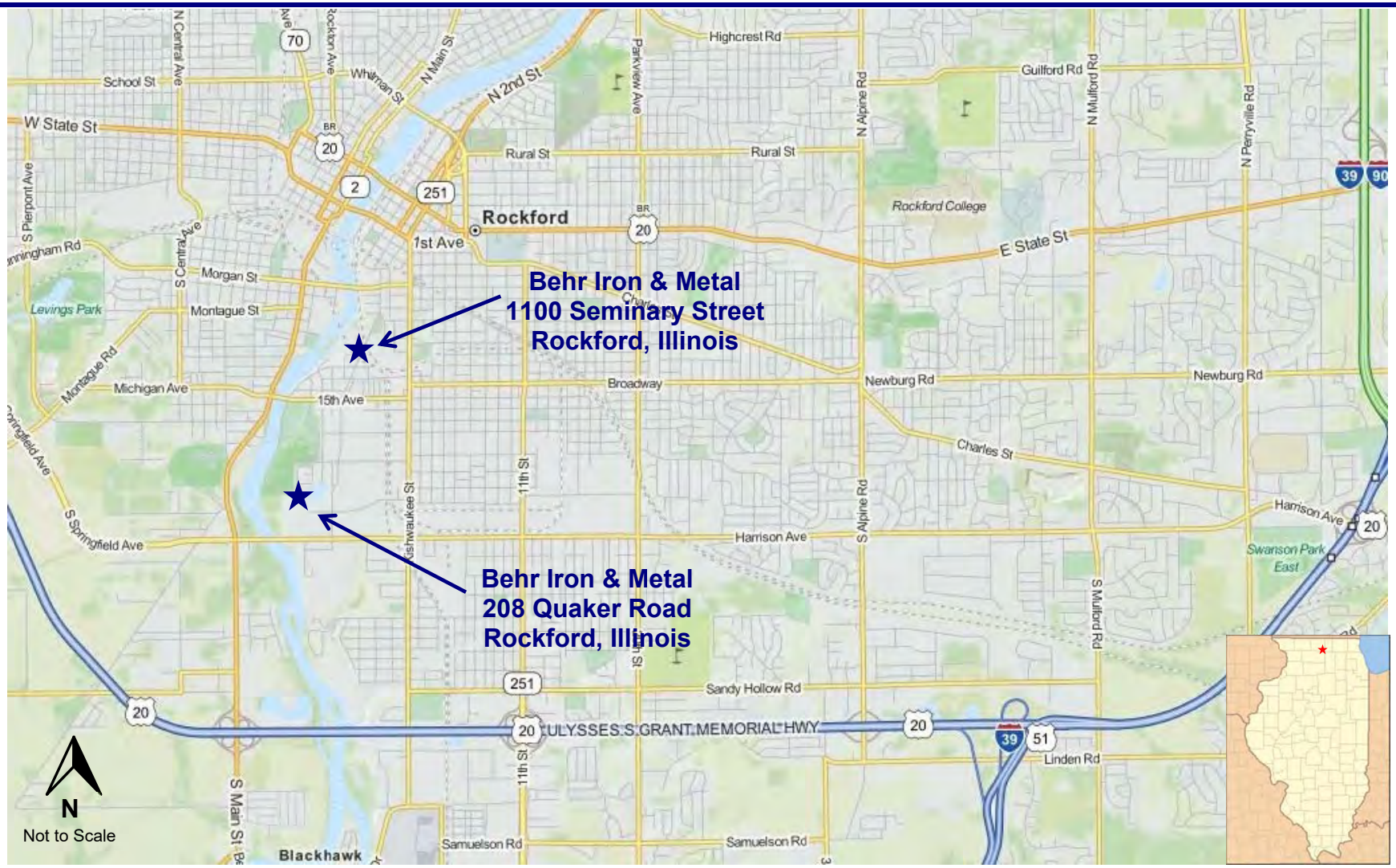

RK & Associates, Inc. 2S631 ROUTE 59, SUITE B WARRENVILLE, IL 60555 630-393-9000/630-393-9111	COMMENTS: Emission Test Report Particulate and Metal Emissions		Site Location Map Behr Iron & Metal -Rockford, Illinois		FIGURE 1-1
	DRAWN BY::	APPROVED BY:: JGP	PROJECT NUMBER R11379	DATE DRAWN: 01-12-16	REVISED DATE

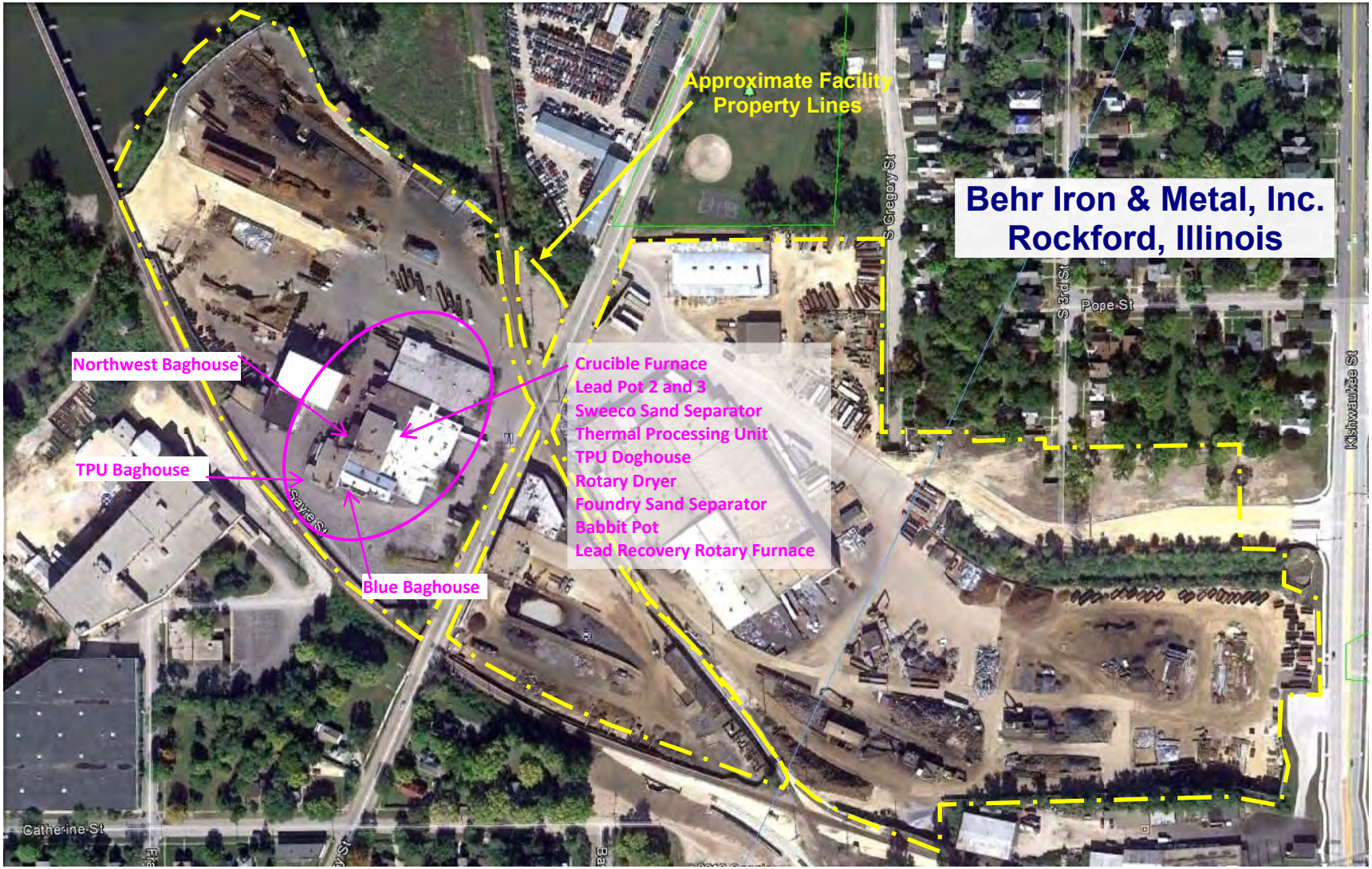

RK & Associates, Inc.
2S631 ROUTE 59, SUITE B
WARRENVILLE, IL 60555
630-393-9000/630-393-9111

COMMENTS:
Emission Test Report
Particulate and Metal Emissions

Facility Map
Behr Iron & Metal
1100 Seminary Street - Rockford, IL

FIGURE: 1-2

DRAWN BY:	APPROVED BY:	PROJECT NUMBER:	DATE:	REVISED DATE:
JP		R11379	01-12-2016	

1.2.1 Blue Baghouse Emission Testing

Figure 1-3 presents a summary of the PM and metals emission testing of the Blue baghouse identifying the test port locations and the average stack gas parameters and PM and metals emission rates. The Mostardi Platt test report for the Blue Baghouse is presented in Appendix B.

Table 1-1 presents a summary of the inlet and outlet testing of the Blue Baghouse.

Table 1-2 presents a summary of the emission unit operating data during testing of the Blue Baghouse.

1.2.2 Northwest Baghouse Emission Testing

Figure 1-4 presents a summary of the PM and metals emission testing of the Northwest baghouse identifying the test port locations and the average stack gas parameters and PM and metals emission rates. The Mostardi Platt test report for the Northwest Baghouse is presented in Appendix C.

Table 1-3 presents a summary of the inlet and outlet testing of the Northwest Baghouse.

Table 1-4 presents a summary of the emission unit operating data during testing of the Northwest Baghouse.

As shown in Figure 1-4, the Northwest Baghouse controls emissions from the following emission units. The table below identifies when each emission unit was tested.

Emission Unit	Uncontrolled Emissions Enter Baghouse at:	Operated in October 2014 Testing PM and Pb	Operated in October 2015 Testing PM and Metals
Rotary Furnace (Secondary Exhaust)	Gas Cooler Inlet		X
Doghouse			
Babbitt Pot / Dross Drum			
Foundry Sand Separator	Dedicated inlet downstream of gas cooler inlet but upstream of baghouse		X
Lead Recovery Rotary Furnace	Gas Cooler Inlet	X	

Because the Foundry Sand Separator and the Lead Recovery Rotary Furnace will be prohibited by permit from operating simultaneously, the worst case emissions from the Northwest Baghouse stack will include the highest PM and Pb emissions from either the Lead Recovery Rotary Furnace or the Foundry Sand Separator.

Figure 1-3. Summary of PM and Metals Emissions Testing of the Blue Baghouse
Behr Iron & Metal - Rockford, Illinois

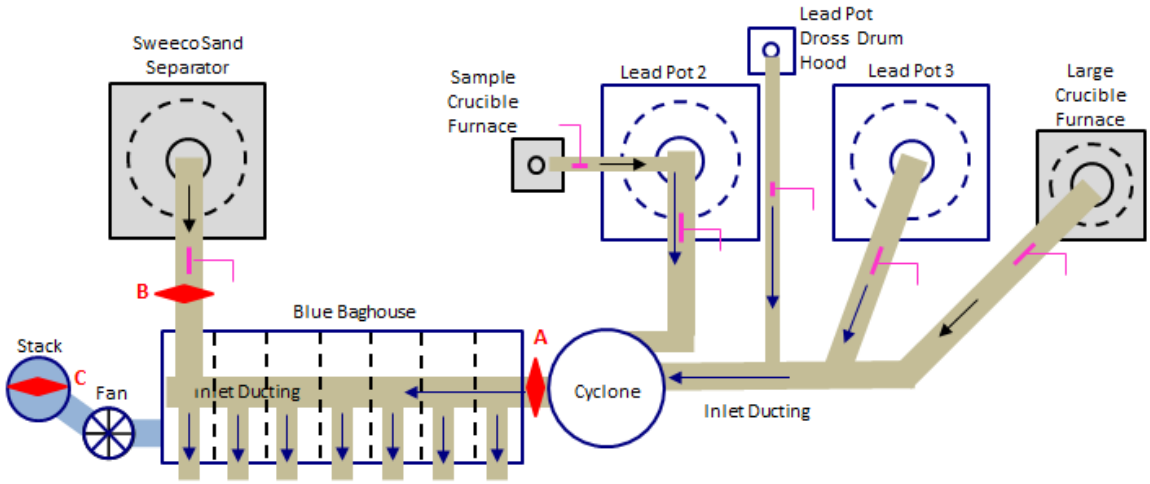

All data represents average or three test runs

Parameter	Units	C Exhaust Stack Sampling	Baghouse Inlet: B Sweeco Separatror Outlet	Baghouse Inlet: A Lead Pots 2, 3 and Dross Drum	Baghouse Removal Efficiency
Average Gas Temp.	°F	95.3 [a]	75.8 [a]	106.0 [a]	
Average Gas Velocity	ft/sec	36.56	75.2	34.9	
Flue Gas Moisture	% Vol	1.60% [a]	1.37% [a]	1.50% [a]	
Gas Volumetric Flow	dscfm	18,406 [a]	5,923 [a]	10,080 [a]	
Particulate Matter	lb/hr	0.1920 [a]	1.1940 [a]	0.0460 [a]	84.52%
Opacity	lb/hr	0			
Antimony (Sb)	lb/hr	0.000050	≤ 0.000635	≤ 0.000079	93.00%
Arsenic (As)	lb/hr	0.000034	≤ 0.000106	≤ 0.000029	74.81%
Barium (Ba)	lb/hr	≤ 0.0002	≤ 0.0003	≤ 0.0003	66.67%
Beryllium (Be)	lb/hr	≤ 0.000008	≤ 0.000008	≤ 0.000008	50.00%
Cadmium (Cd)	lb/hr	≤ 0.000033	≤ 0.000024	≤ 0.000009	0.00%
Chromium (Cr)	lb/hr	0.000183	0.000455	0.000156	70.05%
Cobalt (Co)	lb/hr	0.00010	0.00003	0.0001	23.08%
Copper (Cu)	lb/hr	0.0044	0.0018	0.0241	83.01%
Lead (Pb)	lb/hr	0.0015	0.0193	0.0061	94.09%
Manganese (Mn)	lb/hr	0.0003	0.0001	0.0007	62.50%
Nickel (Ni)	lb/hr	0.0015	0.0003	0.0006	-66.67%
Selenium (Se)	lb/hr	≤ 0.0001	≤ 0.0001	≤ 0.0001	50.00%
Silver (Ag)	lb/hr	≤ 0.00003	≤ 0.00002	≤ 0.0001	75.00%
Zinc (Zn)	lb/hr	0.0028	0.0011	≤ 0.0089	72.00%

a. Data is average of test runs 2 - 4
b. Uncontrolled emissions times (1 - control efficiency).
c. The large and small crucible furnaces was not operated during testing but dampers were left at normal open position.
d. Damper positions depicted above indicate if they were open or shut during testing. The percent open of each damper during the test was recorded in operating data.

Figure 1-4. Summary of PM and Metals Emission Testing of the Northwest Baghouse
Behr Iron & Metal - Rockford, Illinois

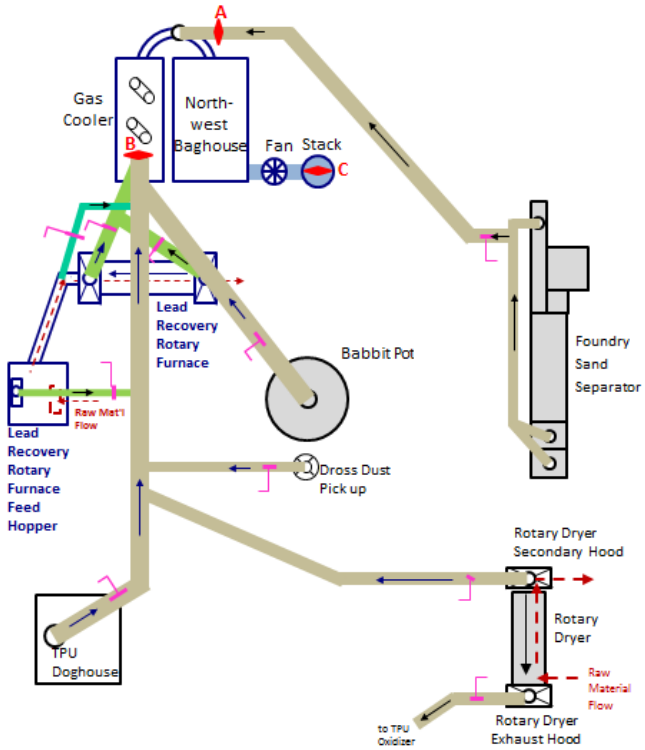

All data represents the average of three test runs

Parameter	Units	C Northwest Baghouse Exhaust	B Northwest Baghouse Gas Cooler Inlet	A Foundary Sand Separator Exhaust	Northwest Baghouse Removal Efficiency
Average Gas Temp.	°F	90.6 [a]	97.5 [b]	61.3 [c]	
Average Gas Velocity	ft/sec	43.74 [a]	42.20 [b]	26.87 [c]	
Flue Gas Moisture	% Vol	1.60% [a]	1.50% [b]	1.20% [c]	
Gas Volumetric Flow	dscfm	14,387 [a]	13,767 [b]	2,201 [c]	
Particulate Matter	lb/hr	0.254 [a]	0.429 [b]	4.359 [c]	94.70%
Opacity	%	0% [a]			
Antimony (Sb)	lb/hr	0.000494 [a]	0.0017040 [b]	0.000604 [c]	78.60%
Arsenic (As)	lb/hr	0.000445 [a]	0.0008750 [b]	0.000031 [c]	50.88%
Barium (Ba)	lb/hr	≤ 0.000145 [a]	≤ 0.000632 [b]	0.000286 [c]	84.20%
Beryllium (Be)	lb/hr	≤ 0.000006 [a]	≤ 0.000010 [b]	≤ 0.000002 [c]	50.00%
Cadmium (Cd)	lb/hr	≤ 0.000041 [a]	≤ 0.000061 [b]	≤ 0.000031 [c]	55.43%
Chromium (Cr)	lb/hr	0.0001 [a]	0.0007 [b]	0.0002 [c]	88.89%
Cobalt (Co)	lb/hr	0.0002 [a]	0.0005 [b]	0.0001 [c]	66.67%
Copper (Cu)	lb/hr	0.0061 [a]	0.0106 [b]	0.0580 [c]	91.11%
Lead (Pb)	lb/hr	0.0126 [a]	0.0419 [b]	0.0482 [c]	86.02%
Manganese (Mn)	lb/hr	0.0003 [a]	0.0007 [b]	0.0018 [c]	88.00%
Nickel (Ni)	lb/hr	0.0010 [a]	0.0081 [b]	0.0008 [c]	88.76%
Selenium (Se)	lb/hr	≤ 0.00010 [a]	≤ 0.00010 [b]	≤ 0.00005 [c]	33.33%
Silver (Ag)	lb/hr	≤ 0.00001 [a]	≤ 0.00002 [b]	≤ 0.00003 [c]	80.00%
Zinc (Zn)	lb/hr	0.0053 [a]	0.0060 [b]	0.0219 [c]	81.00%

a. Total baghouse inlet emissions is the sum of emissions measured in the gas cooler inlet vent and the foundary sand
b. Emissions measured at gas cooler inlet represent combined emissions from the rotary dryer secondary exhaust hood, doghouse, Babbit Pot, and Babbit Pot Dross. The Lead Recovery Rotary Furnace was not operated during this
c. Emission measured in the Foundry Sand Separator are only from the Foundry Sand Spearator.

Table 1-5 presents a summary of the worst case Northwest Baghouse emissions. The worst case particulate emission rate occurs when combining PM emissions from the Rotary Furnace, Doghouse and Babbitt Pot emissions measured during this test event with the Lead Recovery Rotary Furnace PM emission measured in October 2014.

The worst case lead emission rate occurs with combining the Pb emissions from the Rotary Furnace, Doghouse, Babbitt Pot, and Foundry Sand Separator as identified in this testing event.

1.2.3 Emission Testing of Rotary Dryer Primary Exhaust Discharging to the TPU Baghouse

Figure 1-5 presents a summary of the PM and metals emission testing of the Rotary Dryer Primary Exhaust hood that discharges to the TPU baghouse, identifying the test port locations and the average stack gas parameters and PM and metals emission rates. The Rotary Dryer was the only emission unit discharging to the TPU baghouse that was included in this testing program. The Mostardi Platt test report is presented in Appendix D.

Table 1-6 presents a summary of the uncontrolled PM and metals loading in the Rotary Dryer Primary Exhaust hood vent line. As described in Section 1.3 of this test report, the testing contractor was unable to successfully measure a velocity at the selected sampling location. The PM and metals loading data on Table 1-6 represents a single point sample of the uncontrolled emissions from the Rotary Dryer Primary Exhaust vent. A mass emission rate could not be calculated because of the lack of a gas flow measurement.

Table 1-7 presents a summary of the emission unit operating data during testing of the Rotary Dryer Primary Exhaust line that discharges to the TPU Baghouse.

The inlet and outlet of the TPU baghouse was tested for PM and Pb emissions in October 2014 with during normal operation of the thermal processing units (TPU1 and TPU2).

Figure 1-5. Summary of PM and Metals Emissions Testing of the Rotary Dryer Primary Exhaust Discharging Through the TPU Baghouse Behr Iron & Metal - Rockford, Illinois

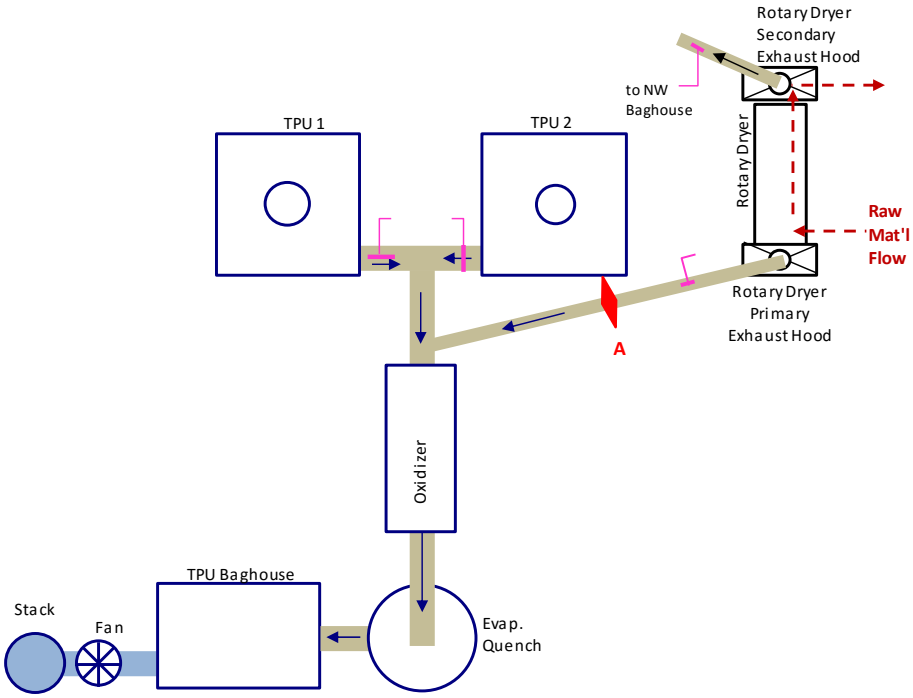

TPU Baghouse Exhaust Stack	Parameter	Units	A Rotary Dryer Primary Exhaust Duct
	Average Gas Temp.	°F	472.6
	Average Gas Velocity	ft/sec	85.93
	Flue Gas Moisture	% Vol	2.40%
	Gas Volumetric Flow	dscfm	0 [a]
	PM Loading	grains/dscf	0.1401
	Antimony (Sb)	ug/dscm	≤ 14.19
	Arsenic (As)	ug/dscm	≤ 8.34
	Barium (Ba)	ug/dscm	≤ 62.65
	Beryllium (Be)	ug/dscm	≤ 2.08
	Cadmium (Cd)	ug/dscm	≤ 2.28
	Chromium (Cr)	ug/dscm	1,239.51
	Cobalt (Co)	ug/dscm	422.44
	Copper (Cu)	ug/dscm	93,439.82
	Lead (Pb)	ug/dscm	1,042.50
	Manganese (Mn)	ug/dscm	1,845.68
	Nickel (Ni)	ug/dscm	13,576.13
	Selenium (Se)	ug/dscm	≤ 29.09
	Silver (Ag)	ug/dscm	≤ 5.22
	Zinc (Zn)	ug/dscm	19,378.12

a. Testing contractor was unable to detect a minimum gas velocity in stack. Visual observations by facility personnel indicated that dryer exhaust was being pulled into the primary exhaust hood; however, the contractor was unable to measure velocity. A single point sample was collected and analyzed for PM and metals.

b. Damper positions depicted above indicate if they were open or shut during testing. The percent open of each damper during the test was recorded in operating data.

1.3 Test Errors

The testing contractor was unable to find an acceptable location or measure flow velocity in the Rotary Dryer Primary Exhaust vent line. When the contractor could not measure a flow velocity in the vent line, Behr used smoke tubes and cycled the damper to demonstrate that emissions from the dryer were being drawn into the exhaust hood located above the material inlet. The source of this error could not be identified.

Mostardi Plat collected a single point sample and analyzed the sample for metals in an attempt to identify the metals present in the exhaust.

1.4 Test Deviations

There were no test deviations from the test protocol.

1.5 Production Data

Emission unit operating data are presented in Table 1-2, 1-4, and 1-7 present the production and operating data for the emission units contributing emissions to the Blue Baghouse, Northwest Baghouse, and TPU Baghouse respectively.

Table 1-8 presents a summary of the actual production data for each emission unit compared to the permitted production rates of each emission unit. The following summarizes the demonstrated overall average throughput rate for each emission unit during this testing event. All emission units were operated at normal throughput using worst raw materials with respect to lead content. Although these demonstrated rates are less than the permitted throughputs, they are representative of normal operations. In the case of the Lead Pots and Babbitt Pots and Rotary Dryer the permitted throughputs are significantly higher than the actual throughputs.

Baghouse	Emission Unit	Permitted Rate (tons/hr)	Overall % of Permitted Rates Demonstrated in October 2015 Emission Testing
Blue	Sweeco Sand Separator	0.25	89%
	Lead Pot 2[a]	1.05	36%
	Lead Pot 3[a]	1.05	34%
Northwest	Rotary Dryer (Secondary Exhaust)	1.06	29%
	Doghouse[b]	NA	0.83 cycles/hr
	Babbitt Pot[c]	0.75	64%
	Foundry Sand Separator	0.75	96%
TPU	Rotary Dryer - (Primary Exhaust)	1.06	33%

2.0 FACILITY OPERATIONS

2.1 Process and Control Equipment Descriptions

Detailed process and control equipment descriptions are presented in the Test Protocol document presented in Appendix A of this test report.

2.2 Operating Parameters of Baghouse and Associated Equipment

Tables 1-2, 1-4 and 1-7 present the process unit and control equipment operating parameters during the test.

All process equipment and control equipment ran normally during the test.

2.3 Facility Operating Parameters

Table 1-8 presents a detailed summary of the operating rate of each emission unit that contributed emissions to the baghouses during this testing event. Equipment operating logs are available upon request.

All emission units were operated at normal throughput using worst raw materials with respect to lead content. Although these demonstrated rates are less than the permitted throughputs, they are representative of normal operations.

This Page Left Blank

3.0 SAMPLING AND ANALYTICAL PROCEDURES

The following test procedures will be performed at each test location

3.1 Sampling Point Location and Cross Section

Sampling point data is presented in the Mostardi Platt test reports attached as Appendix B, C, and D for the Blue Baghouse, Northwest Baghouse, and TPU Baghouse respectively.

3.2 Sampling Point Descriptions

Sampling points are described in the test protocol document attached as Appendix A. Sample port locations are shown in Figures 1-3, 1-4, and 1-5 for the Blue Baghouse, Northwest Baghouse, and TPU Baghouse respectively.

3.3 Sampling and Analytical Procedures

The sampling and analytical procedures used are described in the Mostardi Platt test reports attached as Appendix B, C, and D for the Blue Baghouse, Northwest Baghouse, and TPU Baghouse respectively.

3.4 Deviations from Sampling and Analytical Procedures

There were no deviations from sampling and analytical procedures during this testing event.

As described in Section 1 above, a gas velocity could not be measured in the vent line from the Rotary Furnace Primary Exhaust hood. Operations personnel exercised the damper and used visual observation to verify that dryer exhausts were being pulled into the hood. As a result, a single point sample was collected to quantify the uncontrolled concentrations for PM and metals in this exhaust stream. A uncontrolled mass at the baghouse inlet could not be calculated due to lack of a measured gas flow.

3.5 Quality Control / Quality Assurance Procedures

Quality Control / Quality Assurance procedures are addressed in the Mostardi Platt test reports attached as Appendix B, C, and D for the Blue Baghouse, Northwest Baghouse, and TPU Baghouse respectively.

The testing contractor recognizes that reference test methods are very technique oriented and worked to minimize all factors that can increase error by implementing its Quality Assurance Program into every segment of its testing activities.

Copies of all pertinent calibration data (calibration gas certifications, Pitot tubes, dry gas meters, nozzles, etc.) are presented in the final test reports prepared by Mostardi Plat.

Calculations were performed by computer. An explanation of the nomenclature and calculations along with the complete test results are included in the Mostardi Plat test reports appended in this test report.

All the data necessary for the agency to reproduce the reported results are included in the final test reports. The data includes, but is not limited to DAS printouts, calibration data, uncorrected run averages, raw lab analysis (including chromatograms, spectra or other instrument output, and calibration and QA/QC data) with summary tables, and raw field data.

Dry gas meters were calibrated according to methods described in the Code of Federal Regulations. The dry test meters measured the test sample volumes to within 2 percent at the flowrate and conditions encountered during sampling.

The Method 29 audit sample report is presented as Appendix E. The audit sample results met program requirements.

RK & Associates, Inc.

Emission Test Report
Particulate and Metals Emissions

Behr Iron & Metal - Rockford, Illinois
Site ID No.: P201030AB

January 19, 2016

TABLES

This Page Left Blank

Table 1-1. Summary of PM and Metals Emissions Testing of Inlet/Outlet of Blue Baghouse
Behr Iron & Metal - Rockford, Illinois

		Blue Baghouse Inlet										Blue Baghouse Outlet					Baghouse Control Efficiency		
		Combined Emissions from Lead Pot 1, Lead Pot 2 and Dross Drum at Outlet of Common Cyclone					Sweeco Separator Outlet					Blue (Flex Kleen) Baghouse Outlet					Blue Baghouse Outlet		
Parameter	Units	Run 1	Run 2	Run 3	Run 4	Average	Run 1	Run 2	Run 3	Run 4	Average	Run 1	Run 2	Run 3	Run 4	Average	Total Inlet lb/hr	Total Outlet lb/hr	Control Eff %
Source Condition		Normal	Normal	Normal	Normal	Runs 2-4	Normal	Normal	Normal	Normal	Runs 2-4	Normal	Normal	Normal	Normal	Runs 2-4			
Date		10/7/2015	10/7/2015	10/7/2015	10/7/2015		10/7/2015	10/7/2015	10/7/2015	10/7/2015		10/7/2015	10/7/2015	10/7/2015	10/7/2015				
Run Start Time		8:20	11:35	14:20	17:00		8:20	11:35	14:20	17:00		8:20	11:35	14:20	17:00		Average of Runs 2-4	Average of Runs 2-4	Average of Runs 2-4
Run End Time		10:37	13:43	16:28	19:05		10:36	13:43	16:28	19:05		10:39	13:43	16:28	19:05				
Duration	hrs	2.28	2.13	2.13	2.08		2.27	2.13	2.13	2.08		2.32	2.13	2.13	2.08				
		Stack Conditions					Stack Conditions					Stack Conditions							
Average Gas Temp.	°F	90.5	107.6	104.8	105.5	106.0	67.8	74.7	77.0	75.8	75.8	84.9	93.6	97.6	94.6	95.3			
Flue Gas Moisture	% Vol	1.4%	1.5%	1.5%	1.5%	1.5%	1.3%	1.5%	1.4%	1.2%	1.4%	1.20%	1.70%	1.50%	1.50%	1.60%			
Average Flue Pressure	in Hg	28.93	28.93	28.93	28.93	28.93	28.96	28.96	28.96	28.96	28.96	29.26	29.26	29.26	29.26	29.26			
Gas Sample Volume	dscf	90.277	90.366	90.028	90.979	90.458	69.081	67.106	72.372	90.668	76.715	143.295	77.402	73.402	76.722	75.842			
Average Gas Velocity	ft/sec	33.540	34.994	34.710	35.134	34.946	64.835	66.067	71.066	88.325	75.153	67.259	37.441	35.696	36.538	36.558			
Gas Volumetric Flow	acfm	10,891	11,363	11,271	11,408	11,347	5,431	5,535	5,953	7,399	6,296	37,000	20,596	19,637	20,100	20,111			
Gas Volumetric Flow	dscfm	9,959	10,065	10,034	10,140	10,080	5,188	5,210	5,587	6,971	5,923	34,633	18,885	17,903	18,430	18,406			
Gas Volumetric Flow	scfm	10,098	10,219	10,185	10,297	10,234	5,259	5,290	5,666	7,058	6,005	35,058	19,207	18,182	18,710	18,700			
Average % CO_2 (dry)	% Vol	0.00	0.00	0.00	0.00	0.00	0.00	0.00	0.00	0.00	0.00	0.0	0.0	0.0	0.0	0.0			
Average % O_2 (dry)	% Vol	20.9	20.9	20.9	20.9	20.9	20.9	20.9	20.9	20.9	20.9	20.9	20.9	20.9	20.9	20.9			
Isokinetic Variance		102.1	101.1	101.1	101.1	101.1	99.5	96.3	96.8	97.2	96.8	101.5	100.6	100.6	102.2	101.1			
		Filterable Particulate Matter (Method 5)					Filterable Particulate Matter (Method 5)					Filterable Particulate Matter (Method 5)					Filterable Particulate Matter		
Grams Collected	gr	0.0174	0.0026	0.0039	0.0030	0.0032	0.0920	0.1250	0.1030	0.1226	0.1169	0.0068	0.006	0.0061	0.0058	0.006			
PM Concentration	grains/acf	0.0027	0.0004	0.0006	0.0005	0.0005	0.0196	0.0271	0.0206	0.0197	0.0225	0.0007	0.0011	0.0012	0.0011	0.0011			
PM Concentration	grains/dscf	0.0030	0.0004	0.0007	0.0005	0.0005	0.0205	0.0287	0.0220	0.0209	0.0239	0.0007	0.0012	0.0013	0.0012	0.0012			
PM Mass Emission	lb/hr	0.2540	0.0380	0.0570	0.0440	0.0460	0.9140	1.2830	1.0520	1.2470	1.1940	0.217	0.194	0.197	0.184	0.192	1.240	0.192	84.52%
												Opacity (Method 9)							
Opacity	%											0%	0%	0%	0%	0%			
		Antimony (Sb) Emissions (Method 29)					Antimony (Sb) Emissions (Method 29)					Antimony (Sb) Emissions (Method 29)					Antimony (Sb) Emissions		
ug of Sample	ug	72.3	10.11	110.35	8.77	43.08	7.11	≤ 8.30	≤ 6.70	≤ 8.20	≤ 7.73	6.26	≤ 1.87	≤ 1.66	≤ 1.18	≤ 1.57			
Concentration	ppb	5.58	0.78	8.55	0.67	3.33	0.72	≤ 0.86	≤ 0.65	≤ 0.63	≤ 0.71	0.31	≤ 0.17	≤ 0.16	≤ 0.11	≤ 0.14			
Concentration	ug/dscm	28.28	3.95	43.29	3.4	16.88	3.63	≤ 4.37	≤ 3.27	≤ 3.19	≤ 3.61	1.54	≤ 0.85	≤ 0.80	≤ 0.54	≤ 0.73			
Mass Emission	lb/hr	0.001055	0.000149	0.001627	0.000129	0.000635	0.000071	≤ 0.000085	≤ 0.000068	≤ 0.000083	≤ 0.000079	0.000200	≤ 0.000060	≤ 0.000054	≤ 0.000037	≤ 0.000050	≤ 0.000714	≤ 0.00005	93.00%
		Arsenic (As) Emissions (Method 29)					Arsenic (As) Emissions (Method 29)					Arsenic (As) Emissions (Method 29)					Arsenic (As) Emissions		
ug of Sample	ug	19.29	7.79	9.18	4.56	7.18	≤ 2.20	≤ 2.20	≤ 2.20	≤ 4.20	≤ 2.87	≤ 4.29	≤ 1.20	≤ 1.00	≤ 1.00	≤ 1.07			
Concentration	ppb	2.42	0.98	1.16	0.57	0.9	≤ 0.36	≤ 0.37	≤ 0.34	≤ 0.53	≤ 0.41	≤ 0.34	≤ 0.18	≤ 0.15	≤ 0.15	≤ 0.16			
Concentration	ug/dscm	7.55	3.04	3.6	1.77	2.8	≤ 1.12	≤ 1.16	≤ 1.07	≤ 1.64	≤ 1.29	≤ 1.06	≤ 0.55	≤ 0.48	≤ 0.46	≤ 0.50			
Mass Emission	lb/hr	0.000281	0.000115	0.000135	0.000067	0.000106	≤ 0.000022	≤ 0.000023	≤ 0.000022	≤ 0.000043	≤ 0.000029	≤ 0.000137	≤ 0.000039	≤ 0.000032	≤ 0.000032	≤ 0.000034	≤ 0.000135	≤ 0.000034	74.81%
		Barium (Ba) Emissions (Method 29)					Barium (Ba) Emissions (Method 29)					Barium (Ba) Emissions (Method 29)					Barium (Ba) Emissions		
ug of Sample	ug	≤ 16.70	≤ 18.30	13.2	≤ 18.30	≤ 16.60	59.30	29.40	≤ 36.80	≤ 31.80	≤ 32.67	6.50	6.30	≤ 6.20	≤ 4.10	≤ 5.53			
Concentration	ppb	≤ 1.14	≤ 1.25	0.91	≤ 1.24	≤ 1.13	5.31	2.71	≤ 3.14	≤ 2.17	≤ 2.67	0.28	0.50	≤ 0.52	≤ 0.33	≤ 0.45			
Concentration	ug/dscm	≤ 6.53	≤ 7.15	5.18	≤ 7.10	≤ 6.48	30.31	15.47	≤ 17.96	≤ 12.39	≤ 15.27	1.60	2.87	≤ 2.98	≤ 1.89	≤ 2.58			
Mass Emission	lb/hr	≤ 0.00020	≤ 0.00030	0.0002	≤ 0.0003	≤ 0.0003	0.0006	0.0003	≤ 0.0004	≤ 0.0003	≤ 0.0003	0.0002	0.0002	≤ 0.0002	≤ 0.0001	≤ 0.0002	≤ 0.0006	≤ 0.0002	66.67%
		Beryllium (Be) Emissions (Method 29)					Beryllium (Be) Emissions (Method 29)					Beryllium (Be) Emissions (Method 29)					Beryllium (Be) Emissions		
ug of Sample	ug	≤ 0.55	≤ 0.55	≤ 0.55	≤ 0.55	≤ 0.55	≤ 0.55	≤ 0.55	≤ 0.55	≤ 1.05	≤ 0.72	≤ 0.25	≤ 0.25	≤ 0.25	≤ 0.25	≤ 0.25			
Concentration	ppb	≤ 0.57	≤ 0.57	≤ 0.58	≤ 0.57	≤ 0.57	≤ 0.75	≤ 0.77	≤ 0.72	≤ 1.09	≤ 0.86	≤ 0.16	≤ 0.30	≤ 0.32	≤ 0.31	≤ 0.31			
Concentration	ug/dscm	≤ 0.22	≤ 0.21	≤ 0.22	≤ 0.21	≤ 0.21	≤ 0.28	≤ 0.29	≤ 0.27	≤ 0.41	≤ 0.32	≤ 0.06	≤ 0.11	≤ 0.12	≤ 0.12	≤ 0.12			
Mass Emission	lb/hr	≤ 0.000008	≤ 0.000008	≤ 0.000008	≤ 0.000008	≤ 0.000008	≤ 0.000005	≤ 0.000006	≤ 0.000006	≤ 0.000011	≤ 0.000008	≤ 0.000008	≤ 0.000008	≤ 0.000008	≤ 0.000008	≤ 0.000008	≤ 0.000016	≤ 0.000008	50.00%

Table 1-1. Summary of PM and Metals Emissions Testing of Inlet/Outlet of Blue Baghouse
Behr Iron & Metal - Rockford, Illinois

		Blue Baghouse Inlet										Blue Baghouse Outlet					Baghouse Control Efficiency		
		Combined Emissions from Lead Pot 1, Lead Pot 2 and Dross Drum at Outlet of Common Cyclone					Sweeco Separator Outlet					Blue (Flex Kleen) Baghouse Outlet					Blue Baghouse Outlet		
Parameter	Units	Run 1	Run 2	Run 3	Run 4	Average	Run 1	Run 2	Run 3	Run 4	Average	Run 1	Run 2	Run 3	Run 4	Average	Total Inlet lb/hr	Total Outlet lb/hr	Control Eff %
		Cadmium (Cd) Emissions (Method 29)					Cadmium (Cd) Emissions (Method 29)					Cadmium (Cd) Emissions (Method 29)					Cadmium (Cd) Emissions		
ug of Sample	ug	1.75	1.3	2.92	≤ 0.61	≤ 1.61	3.28	0.67	≤ 0.78	≤ 1.20	≤ 0.88	0.53	≤ 1.69	1.10	≤ 0.25	≤ 1.01			
Concentration	ppb	0.15	0.11	0.25	≤ 0.05	≤ 0.13	0.36	0.08	≤ 0.08	≤ 0.10	≤ 0.09	0.03	≤ 0.17	0.11	≤ 0.03	≤ 0.10			
Concentration	ug/dscm	0.68	0.51	1.14	≤ 0.24	≤ 0.63	1.67	0.35	≤ 0.38	≤ 0.47	≤ 0.40	0.13	≤ 0.77	0.53	≤ 0.12	≤ 0.47			
Mass Emission	lb/hr	0.000025	0.000019	0.000043	≤ 0.000009	≤ 0.000024	0.000033	0.000007	≤ 0.000008	≤ 0.000012	≤ 0.000009	0.000017	≤ 0.000055	0.000035	≤ 0.000008	≤ 0.000033	≤ 0.000033	≤ 0.000033	0.00%
		Chromium (Cr) Emissions (Method 29)					Chromium (Cr) Emissions (Method 29)					Chromium (Cr) Emissions (Method 29)					Chromium (Cr) Emissions		
ug of Sample	ug	28.15	64.85	18.85	9.01	30.9	17.48	12.99	16.06	16.75	15.27	7.58	7.13	5.76	4.21	5.70			
Concentration	ppb	5.09	11.72	3.42	1.62	5.58	4.13	3.16	3.62	3.02	3.27	0.86	1.50	1.28	0.90	1.23			
Concentration	ug/dscm	11.01	25.34	7.39	3.5	12.08	8.94	6.84	7.84	6.52	7.07	1.87	3.25	2.77	1.94	2.65			
Mass Emission	lb/hr	0.000411	0.000955	0.000278	0.000133	0.000455	0.000174	0.000133	0.000164	0.000170	0.000156	0.000242	0.000230	0.000186	0.000134	0.000183	0.0006	0.0002	70.05%
		Cobalt (Co) Emissions (Method 29)					Cobalt (Co) Emissions (Method 29)					Cobalt (Co) Emissions (Method 29)					Cobalt (Co) Emissions		
ug of Sample	ug	3.94	2.42	2.84	1.34	2.20	5.16	7.52	6.91	6.71	7.05	4.87	2.87	2.79	1.85	2.50			
Concentration	ppb	0.63	0.39	0.45	0.21	0.35	1.08	1.61	1.38	1.07	1.35	0.49	0.53	0.55	0.35	0.48			
Concentration	ug/dscm	1.54	0.95	1.11	0.52	0.86	2.64	3.96	3.37	2.61	3.31	1.20	1.31	1.34	0.85	1.17			
Mass Emission	lb/hr	0.00006	0.00004	0.00004	0.00002	0.00003	0.0001	0.0001	0.0001	0.0001	0.0001	0.0002	0.0001	0.0001	0.0001	0.0001	0.0001	0.0001	23.08%
		Copper (Cu) Emissions (Method 29)					Copper (Cu) Emissions (Method 29)					Copper (Cu) Emissions (Method 29)					Copper (Cu) Emissions		
ug of Sample	ug	232.60	95.20	179.90	84.20	119.77	614.00	2,529.70	2,346.00	2,198.10	2,357.93	267.60	169.30	158.80	85.30	137.80			
Concentration	ppb	34.41	14.07	26.69	12.36	17.71	118.71	503.48	432.95	323.79	420.07	24.94	29.21	28.90	14.85	24.32			
Concentration	ug/dscm	90.99	37.20	70.57	32.68	46.82	313.88	1,331.27	1,144.76	856.15	1,110.73	65.95	77.24	76.40	39.26	64.30			
Mass Emission	lb/hr	0.0034	0.0014	0.0027	0.0012	0.0018	0.0061	0.0260	0.0240	0.0224	0.0241	0.0086	0.0055	0.0051	0.0027	0.0044	0.0259	0.0044	83.01%
		Lead (Pb) Emissions (Method 29)					Lead (Pb) Emissions (Method 29)					Lead (Pb) Emissions (Method 29)					Lead (Pb) Emissions		
ug of Sample	ug	1,789.46	781.36	1,484.77	1,666.27	1,310.80	338.91	612.68	542.46	626.97	594.04	237.87	59.35	43.96	38.01	47.11			
Concentration	ppb	81.20	35.42	67.56	75.03	59.34	20.10	37.40	30.71	28.33	32.15	6.80	3.14	2.45	2.03	2.54			
Concentration	ug/dscm	700.00	305.35	582.42	646.78	511.52	173.25	322.43	264.70	244.20	277.11	58.62	27.08	21.15	17.50	21.91			
Mass Emission	lb/hr	0.0261	0.0115	0.0219	0.0246	0.0193	0.0034	0.0063	0.0055	0.0064	0.0061	0.0076	0.0019	0.0014	0.0012	0.0015	0.0254	0.0015	94.09%
		Manganese (Mn) Emissions (Method 29)					Manganese (Mn) Emissions (Method 29)					Manganese (Mn) Emissions (Method 29)					Manganese (Mn) Emissions		
ug of Sample	ug	12.27	5.28	7.28	≤ 5.22	≤ 5.93	30.53	51.50	81.17	68.88	67.18	22.37	9.94	9.87	6.22	8.68			
Concentration	ppb	2.10	0.90	1.25	≤ 0.89	≤ 1.01	6.83	11.86	17.33	11.74	13.64	2.41	1.98	2.08	1.25	1.77			
Concentration	ug/dscm	4.80	2.06	2.86	≤ 2.03	≤ 2.32	15.61	27.10	39.61	26.83	31.18	5.51	4.54	4.75	2.86	4.05			
Mass Emission	lb/hr	0.0002	0.0001	0.0001	≤ 0.0001	≤ 0.0001	0.0003	0.0005	0.0008	0.0007	0.0007	0.0007	0.0003	0.0003	0.0002	0.0003	0.0008	0.0003	62.50%
		Nickel (Ni) Emissions (Method 29)					Nickel (Ni) Emissions (Method 29)					Nickel (Ni) Emissions (Method 29)					Nickel (Ni) Emissions		
ug of Sample	ug	44.11	27.71	23.87	13.89	21.82	64.81	46.45	64.72	53.33	54.83	58.09	61.93	50.67	26.38	46.33			
Concentration	ppb	7.06	4.43	3.83	2.21	3.49	13.56	10.01	12.93	8.50	10.48	5.86	11.57	9.98	4.97	8.84			
Concentration	ug/dscm	17.26	10.83	9.36	5.39	8.53	33.13	24.44	31.58	20.77	25.60	14.32	28.26	24.38	12.14	21.59			
Mass Emission	lb/hr	0.0006	0.0004	0.0004	0.0002	0.0003	0.0006	0.0005	0.0007	0.0005	0.0006	0.0019	0.0020	0.0016	0.0008	0.0015	0.0009	0.0015	-66.67%
		Selenium (Se) Emissions (Method 29)					Selenium (Se) Emissions (Method 29)					Selenium (Se) Emissions (Method 29)					Selenium (Se) Emissions		
ug of Sample	ug	≤ 5.55	≤ 5.71	≤ 5.53	≤ 5.50	≤ 5.58	≤ 5.50	≤ 5.50	≤ 5.50	≤ 10.50	≤ 7.17	≤ 4.54	≤ 2.50	≤ 2.91	≤ 2.50	≤ 2.64			
Concentration	ppb	≤ 0.66	≤ 0.68	≤ 0.66	≤ 0.65	≤ 0.66	≤ 0.86	≤ 0.88	≤ 0.82	≤ 1.25	≤ 0.98	≤ 0.34	≤ 0.35	≤ 0.43	≤ 0.35	≤ 0.37			
Concentration	ug/dscm	≤ 2.17	≤ 2.23	≤ 2.17	≤ 2.13	≤ 2.18	≤ 2.81	≤ 2.89	≤ 2.68	≤ 4.09	≤ 3.22	≤ 1.12	≤ 1.14	≤ 1.40	≤ 1.15	≤ 1.23			
Mass Emission	lb/hr	≤ 0.0001	≤ 0.0001	≤ 0.0001	≤ 0.0001	≤ 0.0001	≤ 0.0001	≤ 0.0001	≤ 0.0001	≤ 0.0001	≤ 0.0001	≤ 0.0001	≤ 0.0001	≤ 0.0001	≤ 0.0001	≤ 0.0001	≤ 0.0002	≤ 0.0001	50.00%
		Silver (Ag) Emissions (Method 29)					Silver (Ag) Emissions (Method 29)					Silver (Ag) Emissions (Method 29)					Silver (Ag) Emissions		
ug of Sample	ug	≤ 1.11	≤ 2.15	≤ 1.24	≤ 1.16	≤ 1.52	≤ 1.24	2.01	4.26	≤ 7.30	≤ 4.52	≤ 0.89	≤ 0.52	≤ 0.93	≤ 1.34	≤ 0.93			
Concentration	ppb	≤ 0.10	≤ 0.19	≤ 0.11	≤ 0.10	≤ 0.13	≤ 0.14	0.24	0.46	≤ 0.63	≤ 0.44	≤ 0.05	≤ 0.05	≤ 0.10	≤ 0.14	≤ 0.10			
Concentration	ug/dscm	≤ 0.43	≤ 0.84	≤ 0.49	≤ 0.45	≤ 0.59	≤ 0.63	1.06	2.08	≤ 2.84	≤ 1.99	≤ 0.22	≤ 0.24	≤ 0.45	≤ 0.62	≤ 0.44			
Mass Emission	lb/hr	≤ 0.00002	≤ 0.00003	≤ 0.00002	≤ 0.00002	≤ 0.00002	≤ 0.00001	0.00002	0.00004	≤ 0.0001	≤ 0.0001	≤ 0.00003	≤ 0.00002	≤ 0.00003	≤ 0.00004	≤ 0.00003	≤ 0.0001	≤ 0.0000	75.00%
		Zinc (Zn) Emissions (Method 29)					Zinc (Zn) Emissions (Method 29)					Zinc (Zn) Emissions (Method 29)					Zinc (Zn) Emissions		
ug of Sample	ug	191.20	68.90	105.20	55.20	76.43	541.90	924.40	800.40	896.60	873.80	242.80	103.00	95.60	≤ 60.50	≤ 86.37			
Concentration	ppb	27.50	9.90	15.17	7.88	10.98	101.85	178.86	143.60	128.40	150.29	22.00	17.28	16.91	≤ 10.24	≤ 14.81			
Concentration	ug/dscm	74.79	26.93	41.27	21.43	29.88	277.02	486.47	390.56	349.22	408.75	59.84	46.99	45.99	≤ 27.85	≤ 40.28			
Mass Emission	lb/hr	0.0028	0.0010	0.0016	0.0008	0.0011	0.0054	0.0095	0.0082	0.0091	0.0089	0.0078	0.0033	0.0031	≤ 0.0019	≤ 0.0028	≤ 0.0100	≤ 0.0028	72.00%

Table 1-2. Summary of Unit Operations for Emission Sources Routed to Blue Baghouse During PM and Metals Emission Testing Behr Iron & Metal - Rockford, Illinois

Run No.	10/7/15 Time	Sweeco Separator Batch Data	Sweeco Separator Damper Position	Lead Pot 2 Batch Data	Lead Pot 2 Pot Temp °F	Lead Pot 2 Damper Position	Lead Pot 3 Lead Pot 3	Lead Pot 3 Pot Temp °F	Lead Pot 3 Damper Position	Lead Pot Dross Dm. Damper Position	Blue Baghouse Delta P
	8:00		O		759	O		762	O	O	2.2
	8:05			pot contains 3,388-lbs			pot contains 3,672 lbs				
	8:10			of molten lead			of molten lead				
	8:15		O		759	O		758	O	O	2.2
	8:20						8:20 add lead sow 3,116-lbs				
	8:25										
	8:30		O		760	O		708	O	O	2.2
	8:35										
	8:40										
	8:45		O	8:45 add lead sow 1,632-lbs	758	O		692	O	O	2.2
	8:50										
	8:55										
	9:00		O		648	O		724	O	O	2.2
	9:05										
	9:10										
	9:15		O	9:18 stir	746	O	9:15 add 2-lbs flux[a] and stir	743	O	O	2.2
Run 1 - Not used due to sampling error.	**9:20**										
	9:25						9:28 skim flux and impurities				
	9:30		O		754	O		756	O	O	2.2
	9:35			9:37 add 2-lbs flux[a] and stir							
	9:40						9:40 start pouring ingots				
	9:45		O		758	O		758	O	O	2.2
	9:50			9:50 skim flux and impurities							
	9:55										
	10:00		**O**		758	O		758	O	O	2.3
	10:05										
	10:10			10:10 start pouring ingots							
	10:15	10:12 turn off - raise curtain	O		760	O		762	O	O	2.3
	10:20	1,008-lbs loaded					10:20 stop pouring ingots - remove ingots from molds and stack on skids				
	10:25	10:23 lower curtain - turn on									
	10:30		O		758	O		765	O	O	2.3
	10:35										
	10:37										
	10:40						10:40 start pouring ingots				
	10:45		O	10:45 stop pouring ingots - remove ingots from molds and stack on skids	759	O		765	O	O	2.3
	10:50										
	10:55										
	11:00		O		762	O		760	O	O	2.3

Table 1-2. Summary of Unit Operations for Emission Sources Routed to Blue Baghouse During PM and Metals Emission Testing Behr Iron & Metal - Rockford, Illinois

Run No.	10/7/15 Time	Sweeco Separator		Lead Pot 2			Lead Pot 3			Lead Pot Dross Dm. Damper Position	Blue Baghouse Delta P
		Batch Data	Damper Position	Batch Data	Pot Temp °F	Damper Position	Lead Pot 3	Pot Temp °F	Damper Position		
	11:05										
	11:10			11:12 start pouring ingots							
	11:15		O		757	O		763	O	O	2.3
	11:20										
	11:25										
	11:30		O		759	O		762	O	O	2.3
	11:35										
	11:40										
	11:45		O		759	O		758	O	O	2.3
	11:50										
	11:55										
	12:00		O	12:03 stop pouring ingots - remove ingots from molds and stack on skids	759	O	12:00 stop pouring ingots - remove ingots from molds and stack on skids	763	O	O	2.3
	12:05										
	12:10										
	12:15	12:15 turn off - raise curtain	O		760	O		765	O	O	2.2
	12:20										
	12:25	12:25 lower curtain - turn on									
	12:30	12:15 turn off - raise curtain	O		758	O		760	O	O	2.0
	12:35	1,046-lbs loaded									
Run 2	**12:40**	12:25 lower curtain - turn on									
	12:45		O	12:45 add 1-lbs flux[a] and stir	757	O		761	O	O	2.0
	12:50			12:50 skim flux and impurities							
	12:55										
	13:00		O		759	O		755	O	O	2.0
	13:05										
	13:10										
	13:15		O		760	O		758	O	O	2.0
	13:20			13:20 start pouring ingots			13:20 start pouring ingots				
	13:25										
	13:30		O		759	O		762	O	O	2.0
	13:35										
	13:40										
	13:43										
	13:45		O	13:48 stop pouring ingots - remove	759	O		760	O	O	2.0

Table 1-2. Summary of Unit Operations for Emission Sources Routed to Blue Baghouse During PM and Metals Emission Testing Behr Iron & Metal - Rockford, Illinois

Run No.	10/7/15 Time	Sweeco Separator Batch Data	Sweeco Separator Damper Position	Lead Pot 2 Batch Data	Lead Pot 2 Pot Temp °F	Lead Pot 2 Damper Position	Lead Pot 3 Lead Pot 3	Lead Pot 3 Pot Temp °F	Lead Pot 3 Damper Position	Lead Pot Dross Dm. Damper Position	Blue Baghouse Delta P
	13:50			ingots from molds and stack on skids			13:50 stop pouring ingots - remove ingots from molds and stack on skids				
	13:55										
	14:00		O		759	O		752	O	O	2.1
	14:05						14:00 add lead sow 2,900-lbs				
	14:10			14:10 add lead sow 3,100-lbs							
	14:15		O		712	O		724	O	O	2.1
	14:20										
	14:25										
	14:30		O		684	O		721	O	O	2.1
	14:35										
	14:40										
	14:45		O		722	O		740	O	O	2.1
	14:50	14:50 turn off - raise curtain		14:50 add 1-lbs flux[a] and stir			14:50 add 2-lbs flux[a] and stir				
	14:55	1,012-lbs loaded		14:55 skim flux and impurities			14:55 skim flux and impurities				
	15:00	14:58 lower curtain - turn on	O		756	O		752	O	O	2.2
	15:05										
	15:10										
	15:15		O		759	O		756	O	O	2.2
	15:20						15:20 start pouring ingots				
Run 3	**15:25**			15:25 start pouring ingots							
	15:30		O		757	O		761	O	O	2.2
	15:35										
	15:40										
	15:45		O		755	O		764	O	O	2.2
	15:50										
	15:55										
	16:00		O		760	O		764	O	O	2.2
	16:05										
	16:10										
	16:15		O		760	O		758	O	O	2.3
	16:20			16:20 stop pouring ingots - remove ingots from molds and stack on skids							
	16:25										
	16:28										
	16:30		O		759	O		763	O	O	2.3
	16:35						16:35 stop pouring ingots - remove				

Table 1-2. Summary of Unit Operations for Emission Sources Routed to Blue Baghouse During PM and Metals Emission Testing Behr Iron & Metal - Rockford, Illinois

Run No.	10/7/15 Time	Sweeco Separator Batch Data	Sweeco Separator Damper Position	Lead Pot 2 Batch Data	Lead Pot 2 Pot Temp °F	Lead Pot 2 Damper Position	Lead Pot 3 Lead Pot 3	Lead Pot 3 Pot Temp °F	Lead Pot 3 Damper Position	Lead Pot Dross Dm. Damper Position	Blue Baghouse Delta P
	16:40						ingots from molds and stack on skids				
	16:45		O	15:45 add lead sow 2,140-lbs	751	O		762	O	O	2.3
	16:50	16:50 turn off - raise curtain									
	16:55	1,028-lbs loaded									
Run 4	**17:00**	17:01 lower curtain - turn on	O		689	O	17:00 add lead sow 4,190-lbs	761	O	O	2.1
	17:05										
	17:10										
	17:15		O		694	O		735	O	O	2.1
	17:20										
	17:25										
	17:30		O		711	O		708	O	O	2.0
	17:35										
	17:40										
	17:45		O		736	O		726	O	O	2.0
	17:50										
	17:55										
	18:00		O	18:00 add 2-lbs flux[a] and stir	754	O		742	O	O	2.1
	18:05						18:05 add 2-lbs flux[a] and stir				
	18:10										
	18:15		O		760	O		756	O	O	2.1
	18:20										
	18:25			18:25 skim flux and impurities			18:25 skim flux and impurities				
	18:30		O		762	O		760	O	O	2.1
	18:35										
	18:40			18:40 start pouring ingots			18:40 start pouring ingots				
	18:45		O		759	O		763	O	O	2.1
	18:50										
	18:55										
	19:00		O		760	O		764	O	O	2.1
	19:05										
	19:10										
	19:15		O		760	O		764	O	O	2.1
	19:20										
	19:25										
	19:30		O		758	O		761	O	O	2.2

Table 1-2. Summary of Unit Operations for Emission Sources Routed to Blue Baghouse During PM and Metals Emission Testing Behr Iron & Metal - Rockford, Illinois

Run No.	10/7/15 Time	Sweeco Separator		Lead Pot 2			Lead Pot 3			Lead Pot Dross Dm. Damper Position	Blue Baghouse Delta P
		Batch Data	Damper Position	Batch Data	Pot Temp °F	Damper Position	Lead Pot 3	Pot Temp °F	Damper Position		
	19:35										
	19:40										
	19:45		O		759	O		757	O	O	2.2
	19:50										
	19:55										
	20:00		O		760	O		760	O	O	2.2
	20:05										
	20:10	20:10 turn off									
	20:15		O		760	O		764	O	O	2.2
	20:20										
	20:25										
	20:30		O		760	O		765	O	O	2.2
		a. Batch operation. With the unit off, the curtain covering the front of the unit is opened and a fork lift is used to add material to the screen. The curtain is lowered and the unit is turn on to process materials.		a. Ammonium chloride flux. Skimming is performed by hand with slag placed in dross drum. Molten metal is hand ladled into ingots located on tables between the two pots.			a. Ammonium chloride flux. Skimming is performed by hand with slag placed in dross drum. Molten metal is hand ladled into ingots located on tables between the two pots.				

This Page Left Blank

Table 1-3. Summary of PM and Metals Emission Testing of Foundry Sand Separator Exhaust and Northwest Baghouse Gas Cooler Inlet Behr Iron & Metal - Rockford, Illinois

Parameter	Units	Foundry Sand Separator Exhaust, Behr Iron & Metal - Rockford, Illinois				Northwest Baghouse Gas Cooler Inlet (Combined Rotary Dryer Secondary Hood, Doghouse, Babbitt Pot, and Babbitt Pot Dross Drum), Behr Iron & Metal - Rockford, Illinois			
		Run 1	Run 2	Run 3	Average	Run 1	Run 2	Run 3	Average
Source Condition		Normal	Normal	Normal		Normal	Normal	Normal	
Date		10/06/15	10/06/15	10/06/15		10/06/15	10/06/15	10/06/15	
Run Start Time		11:40	14:40	17:40		11:40	14:40	17:35	
Run End Time		13:52	16:52	19:51		13:52	16:52	19:51	
		Stack Conditions				**Stack Conditions**			
Average Gas Temperature	°F	67.2	66.5	50.3	61.3	94.2	93.6	101.4	97.5
Flue Gas Moisture	% Vol	1.20%	1.20%	1.30%	1.20%	1.40%	1.30%	1.70%	1.50%
Average Flue Pressure	in Hg	29.25	29.25	29.25	29.25	29.35	29.35	29.35	29.35
Gas Sample Volume	dscf	97.41	101.603	86.208	95.074	76.881	90.097	91.445	90.771
Average Gas Velocity	ft/sec	26.842	27.603	26.149	26.865	40.889	41.193	43.201	42.197
Gas Volumetric Flow Rate	acfm	2,249	2,312	2,191	2,251	14,572	14,680	15,396	15,038
Gas Volumetric Flow Rate	dscfm	2,176	2,241	2,187	2,201	13,432	13,563	13,971	13,767
Gas Volumetric Flow Rate	scfm	2,202	2,267	2,216	2,228	13,621	13,736	14,206	13,971
Average % CO_2	% Vol dry	0.0	0.0	0.0	0.0	0.1	0.1	0.1	0.1
Average % O_2	% Vol dry	20.9	20.9	20.9	20.9	20.8	20.8	20.8	20.8
Isokinetic Variance		99.4	100.7	93.5	97.9	94.9	103	101.5	102.3
		Filterable Particulate Matter (Method 5)				**Filterable Particulate Matter (Method 5)**			
Grams Collected	gr	2.0658	1.3700	0.8877	1.4412	0.0415	0.0287	0.0142	0.0214
PM Concentration	grains/acf	0.3167	0.2016	0.1586	0.2256	0.0077	0.0045	0.0022	0.0034
PM Concentration	grains/dscf	0.3272	0.2081	0.1589	0.2314	0.0083	0.0049	0.0024	0.0037
PM Mass Emission	lb/hr	6.103	3.997	2.978	4.359	0.959	0.571	0.287	0.429
Opacity	%								
		Antimony (Sb) Emissions (Method 29)				**Antimony (Sb) Emissions (Method 29)**			
ug of Sample	ug	241	219.35	137	199.12	150	49.2	33	77.4
Concentration	ppb	17.25	15.05	11.08	14.46	13.6	3.81	2.52	6.64
Concentration	ug/dscm	87.37	76.24	56.12	73.24	68.9	19.28	12.74	33.64
Mass Emission	lb/hr	0.000712	0.00064	0.00046	0.000604	0.003466	0.00098	0.000667	0.001704
		Arsenic (As) Emissions (Method 29)				**Arsenic (As) Emissions (Method 29)**			
ug of Sample	ug	12	11.8	7.3	10.37	19.12	87.4	21.87	42.8
Concentration	ppb	1.4	1.32	0.96	1.22	2.82	10.99	2.71	5.51
Concentration	ug/dscm	4.35	4.1	2.99	3.81	8.78	34.26	8.45	17.16
Mass Emission	lb/hr	0.000035	0.000034	0.000024	0.000031	0.000442	0.00174	0.000442	0.000875
		Barium (Ba) Emissions (Method 29)				**Barium (Ba) Emissions (Method 29)**			
ug of Sample	ug	109.90	105.50	67.30	94.23	54.40	≤ 16.70	15.20	≤ 28.77
Concentration	ppb	6.97	6.42	4.83	6.07	4.37	≤ 1.15	1.03	≤ 2.18
Concentration	ug/dscm	39.84	36.67	27.57	34.69	24.99	≤ 6.55	5.87	≤ 12.47
Mass Emission	lb/hr	0.000325	0.000308	0.000226	0.000286	0.001257	≤ 0.000333	0.000307	≤ 0.000632
		Beryllium (Be) Emissions (Method 29)				**Beryllium (Be) Emissions (Method 29)**			
ug of Sample	ug	≤ 0.55	≤ 0.55	≤ 0.55	≤ 0.55	≤ 0.55	≤ 0.55	≤ 0.25	≤ 0.45
Concentration	ppb	≤ 0.53	≤ 0.51	≤ 0.60	≤ 0.55	≤ 0.67	≤ 0.58	≤ 0.26	≤ 0.50
Concentration	ug/dscm	≤ 0.20	≤ 0.19	≤ 0.23	≤ 0.21	≤ 0.25	≤ 0.22	≤ 0.10	≤ 0.19
Mass Emission	lb/hr	≤ 0.000002	≤ 0.000002	≤ 0.000002	≤ 0.000002	≤ 0.00001	≤ 0.00001	≤ 0.00001	≤ 0.00001
		Cadmium (Cd) Emissions (Method 29)				**Cadmium (Cd) Emissions (Method 29)**			
ug of Sample	ug	0.85	9.44	9.95	10.08	1.51	4.21	3.16	2.96
Concentration	ppb	0.84	0.7	0.87	0.81	0.15	0.35	0.26	0.25
Concentration	ug/dscm	3.93	3.28	4.08	3.76	0.69	1.65	1.22	1.19
Mass Emission	lb/hr	0.000032	0.000028	0.000033	0.000031	0.000035	0.000084	0.000064	0.000061
		Chromium (Cr) Emissions (Method 29)				**Chromium (Cr) Emissions (Method 29)**			
ug of Sample	ug	73.75	52.05	42.39	56.06	46.22	33.35	19.71	33.09
Concentration	ppb	12.36	8.36	8.03	9.58	9.82	6.04	3.52	6.46
Concentration	ug/dscm	26.74	18.09	17.36	20.73	21.23	13.07	7.61	13.97
Mass Emission	lb/hr	0.0002	0.0002	0.0001	0.0002	0.0011	0.0007	0.0004	0.0007
		Cobalt (Co) Emissions (Method 29)				**Cobalt (Co) Emissions (Method 29)**			
ug of Sample	ug	57.96	40.03	24.38	40.79	44.86	21.05	11.78	25.90
Concentration	ppb	8.57	5.68	4.07	6.11	8.41	3.37	1.86	4.54
Concentration	ug/dscm	21.01	13.91	9.99	14.97	20.61	8.25	4.55	11.14
Mass Emission	lb/hr	0.00020	0.00010	0.00010	0.00010	0.00100	0.00040	0.00020	0.00050

Table 1-3. Summary of PM and Metals Emission Testing of Foundry Sand Separator Exhaust and Northwest Baghouse Gas Cooler Inlet Behr Iron & Metal - Rockford, Illinois

		Foundry Sand Separator Exhaust Behr Iron & Metal - Rockford, Illinois				Northwest Baghouse Gas Cooler Inlet (Combined Rotary Dryer Secondary Hood, Doghouse, Babbitt Pot, and Babbitt Pot Dross Drum) Behr Iron & Metal - Rockford, Illinois			
Parameter	**Units**	**Run 1**	**Run 2**	**Run 3**	**Average**	**Run 1**	**Run 2**	**Run 3**	**Average**
		Copper (Cu) Emissions (Method 29)				**Copper (Cu) Emissions (Method 29)**			
ug of Sample	ug	30,602.20	17,002.80	10,105.30	19,236.77	1,044.10	231.90	157.80	477.93
Concentration	ppb	4,195.89	2,235.06	1,565.58	2,665.51	181.38	34.38	23.05	79.60
Concentration	ug/dscm	11,094.41	5,909.75	4,139.58	7,047.91	479.60	90.90	60.94	210.48
Mass Emission	lb/hr	0.0904	0.0496	0.0339	0.0580	0.0241	0.0046	0.0032	0.0106
		Lead (Pb) Emissions (Method 29)				**Lead (Pb) Emissions (Method 29)**			
ug of Sample	ug	20,901.22	16,302.75	10,500.84	15,901.60	4,271.74	810.67	536.71	1,873.04
Concentration	ppb	879.00	657.32	499.00	678.44	227.62	36.86	24.04	96.17
Concentration	ug/dscm	7,577.45	5,666.43	4,301.61	5,848.50	1,962.19	317.75	207.27	829.07
Mass Emission	lb/hr	0.0618	0.0476	0.0352	0.0482	0.0987	0.0161	0.0108	0.0419
		Manganese (Mn) Emissions (Method 29)				**Manganese (Mn) Emissions (Method 29)**			
ug of Sample	ug	825.59	581.19	359.99	588.92	65.61	17.87	12.01	31.83
Concentration	ppb	130.94	88.37	64.51	94.61	13.18	3.06	2.03	6.09
Concentration	ug/dscm	299.31	202.01	147.47	216.26	30.14	7.00	4.64	13.93
Mass Emission	lb/hr	0.0024	0.0017	0.0012	0.0018	0.0015	0.0004	0.0002	0.0007
		Nickel (Ni) Emissions (Method 29)				**Nickel (Ni) Emissions (Method 29)**			
ug of Sample	ug	332.80	229.84	176.46	246.37	466.46	469.58	202.95	379.66
Concentration	ppb	49.39	32.70	29.59	37.23	87.72	75.35	32.09	65.05
Concentration	ug/dscm	120.65	79.89	72.29	90.94	214.26	184.06	78.38	158.90
Mass Emission	lb/hr	0.0010	0.0007	0.0006	0.0008	0.0108	0.0094	0.0041	0.0081
		Selenium (Se) Emissions (Method 29)				**Selenium (Se) Emissions (Method 29)**			
ug of Sample	ug	≤ 5.65	≤ 17.70	≤ 5.50	≤ 9.62	≤ 5.72	≤ 5.50	≤ 3.05	≤ 4.76
Concentration	ppb	≤ 0.62	≤ 1.87	≤ 0.69	≤ 1.06	≤ 0.80	≤ 0.66	≤ 0.36	≤ 0.61
Concentration	ug/dscm	≤ 2.05	≤ 6.15	≤ 2.25	≤ 3.48	≤ 2.63	≤ 2.16	≤ 1.18	≤ 1.99
Mass Emission	lb/hr	≤ 0.00002	≤ 0.0001	≤ 0.00002	≤ 0.00005	≤ 0.0001	≤ 0.0001	≤ 0.0001	≤ 0.0001
		Silver (Ag) Emissions (Method 29)				**Silver (Ag) Emissions (Method 29)**			
ug of Sample	ug	1.96	8.12	9.60	9.89	≤ 1.10	≤ 1.10	≤ 0.50	≤ 0.90
Concentration	ppb	0.97	0.63	0.88	0.82	≤ 0.11	≤ 0.10	≤ 0.04	≤ 0.08
Concentration	ug/dscm	4.34	2.82	3.93	3.70	≤ 0.51	≤ 0.43	≤ 0.19	≤ 0.38
Mass Emission	lb/hr	0.00004	0.00002	0.00003	0.00003	≤ 0.00003	≤ 0.00002	≤ 0.00001	≤ 0.00002
		Zinc (Zn) Emissions (Method 29)				**Zinc (Zn) Emissions (Method 29)**			
ug of Sample	ug	8,991.90	7,762.40	4,913.10	7,222.47	547.90	158.30	110.60	272.27
Concentration	ppb	1,198.56	991.98	739.98	976.84	92.53	22.81	15.70	43.68
Concentration	ug/dscm	3,259.89	2,698.02	2,012.62	2,656.84	251.67	62.05	42.71	118.81
Mass Emission	lb/hr	0.0266	0.0226	0.0165	0.0219	0.0127	0.0032	0.0022	0.0060

Table 1-3. Summary of PM and Metals Emission Testing of Foundry Sand Separator Exhaust and Northwest Baghouse Gas Cooler Inlet Behr Iron & Metal - Rockford, Illinois

		Northwest Baghouse Total Inlet Loading Behr Iron & Metal - Rockford, Illinois				Northwest Baghouse Outlet Behr Iron & Metal - Rockford, Illinois				Baghouse Pollutant Control Efficiency
Parameter	**Units**	**Run 1**	**Run 2**	**Run 3**	**Average**	**Run 1**	**Run 2**	**Run 3**	**Average**	
Source Condition		Sum of Foundry Sand Separator Exhaust and Northwest Baghouse Cooler Inlet				Normal	Normal	Normal		Based on Average Total Inlet and Outlet Mass Emissions (lb/hr)
Date						10/06/15	10/06/15	10/06/15		
Run Start Time						11:40	14:40	17:35		
Run End Time						13:52	16:52	19:51		
		Stack Conditions				**Stack Conditions**				
Average Gas Temperature	°F					89.6	89.9	92.2	90.6	
Flue Gas Moisture	% Vol					1.50%	1.50%	1.70%	1.60%	
Average Flue Pressure	in Hg					29.25	29.25	29.25	29.25	
Gas Sample Volume	dscf					84.471	82.329	87.274	84.691	
Average Gas Velocity	ft/sec					43.866	42.516	44.844	43.742	
Gas Volumetric Flow Rate	acfm					15,633	15,152	15,981	15,589	
Gas Volumetric Flow Rate	dscfm					14,459	14,013	14,690	14,387	
Gas Volumetric Flow Rate	scfm					14,684	14,224	14,940	14,616	
Average % CO_2	% Vol dry					0.0	0.0	0.0	0.0	
Average % O_2	% Vol dry					20.9	20.9	20.9	20.9	
Isokinetic Variance						100.3	100.9	102	101.1	
		Filterable Particulate Matter (Method 5)				**Filterable Particulate Matter (Method 5)**				
Grams Collected	gr	2.1073	1.3987	0.9019	1.4626	0.0111	0.0113	0.0116	0.0113	
PM Concentration	grains/acf	0.3244	0.2061	0.1608	0.2290	0.0019	0.0020	0.0019	0.0019	94.70%
PM Concentration	grains/dscf	0.3355	0.2130	0.1613	0.2351	0.0020	0.0021	0.0021	0.0021	
PM Mass Emission	lb/hr	7.062	4.568	3.265	**4.788**	0.2510	0.2540	0.2580	**0.2540**	
						Opacity (Method 9				
Opacity	%					0%	0%	0%	0%	
		Antimony (Sb) Emissions (Method 29)				**Antimony (Sb) Emissions (Method 29)**				
ug of Sample	ug	391	268.55	170	276.52	37.6	14.4	13.8	21.93	
Concentration	ppb	30.85	18.86	13.6	21.1	3.1	1.22	1.1	1.81	78.60%
Concentration	ug/dscm	156.27	95.52	68.86	106.88	15.72	6.18	5.58	9.16	
Mass Emission	lb/hr	0.004178	0.00162	0.001127	**0.002308**	0.000851	0.000324	0.000307	**0.000494**	
		Arsenic (As) Emissions (Method 29)				**Arsenic (As) Emissions (Method 29)**				
ug of Sample	ug	31.12	99.2	29.17	53.17	34.37	13.47	11.35	19.73	
Concentration	ppb	4.22	12.31	3.67	6.73	4.61	1.85	1.47	2.65	50.88%
Concentration	ug/dscm	13.13	38.36	11.44	20.97	14.37	5.78	4.59	8.25	
Mass Emission	lb/hr	0.000477	0.001774	0.000466	**0.000906**	0.000778	0.000303	0.000253	**0.000445**	
		Barium (Ba) Emissions (Method 29)				**Barium (Ba) Emissions (Method 29)**				
ug of Sample	ug	164.30	≤ 122.20	82.50	≤ 123.00	9.00	5.70	≤ 4.60	≤ 6.43	
Concentration	ppb	11.34	≤ 7.57	5.86	≤ 8.25	0.66	0.43	≤ 0.33	≤ 0.47	84.20%
Concentration	ug/dscm	64.83	≤ 43.22	33.44	≤ 47.16	3.76	2.44	≤ 1.86	≤ 2.69	
Mass Emission	lb/hr	0.001582	≤ 0.000641	0.000533	**≤ 0.000918**	0.000204	0.000128	≤ 0.000102	**≤ 0.000145**	
		Beryllium (Be) Emissions (Method 29)				**Beryllium (Be) Emissions (Method 29)**				
ug of Sample	ug	≤ 1.10	≤ 1.10	≤ 0.80	≤ 1.00	≤ 0.25	≤ 0.25	≤ 0.25	≤ 0.25	
Concentration	ppb	≤ 1.20	≤ 1.09	≤ 0.86	≤ 1.05	≤ 0.28	≤ 0.29	≤ 0.27	≤ 0.28	50.00%
Concentration	ug/dscm	≤ 0.45	≤ 0.41	≤ 0.33	≤ 0.40	≤ 0.10	≤ 0.11	≤ 0.10	≤ 0.10	
Mass Emission	lb/hr	≤ 0.00002	≤ 0.00001	≤ 0.00001	**≤ 0.00001**	≤ 0.000006	≤ 0.000006	≤ 0.000006	**≤ 0.000006**	
		Cadmium (Cd) Emissions (Method 29)				**Cadmium (Cd) Emissions (Method 29)**				
ug of Sample	ug	2.36	13.65	13.11	13.04	1.06	1.62	2.79	1.83	
Concentration	ppb	0.99	1.05	1.13	1.06	0.1	0.15	0.24	0.16	55.43%
Concentration	ug/dscm	4.62	4.93	5.3	4.95	0.44	0.7	1.13	0.76	
Mass Emission	lb/hr	0.000067	0.000112	0.000097	**0.000092**	0.000024	0.000037	0.000062	**0.000041**	
		Chromium (Cr) Emissions (Method 29)				**Chromium (Cr) Emissions (Method 29)**				
ug of Sample	ug	119.97	85.4	62.1	89.15	10.28	5.08	4.54	6.63	
Concentration	ppb	22.18	14.4	11.55	16.04	1.99	1.01	0.85	1.28	88.89%
Concentration	ug/dscm	47.97	31.16	24.97	34.7	4.3	2.18	1.84	2.77	
Mass Emission	lb/hr	0.0013	0.0009	0.0005	**0.0009**	0.0002	0.0001	0.0001	**0.0001**	
		Cobalt (Co) Emissions (Method 29)				**Cobalt (Co) Emissions (Method 29)**				
ug of Sample	ug	102.82	61.08	36.16	66.69	17.97	6.93	6.61	10.50	
Concentration	ppb	16.98	9.05	5.93	10.65	3.06	1.21	1.09	1.79	66.67%
Concentration	ug/dscm	41.62	22.16	14.54	26.11	7.51	2.97	2.68	4.39	
Mass Emission	lb/hr	0.00120	0.00050	0.00030	**0.00060**	0.00040	0.00020	0.00010	**0.00020**	

Table 1-3. Summary of PM and Metals Emission Testing of Foundry Sand Separator Exhaust and Northwest Baghouse Gas Cooler Inlet Behr Iron & Metal - Rockford, Illinois

		Northwest Baghouse Total Inlet Loading Behr Iron & Metal - Rockford, Illinois				Northwest Baghouse Outlet Behr Iron & Metal - Rockford, Illinois				Baghouse Pollutant Control Efficiency
Parameter	Units	Run 1	Run 2	Run 3	Average	Run 1	Run 2	Run 3	Average	
		Copper (Cu) Emissions (Method 29)				Copper (Cu) Emissions (Method 29)				
ug of Sample	ug	31,646.30	17,234.70	10,263.10	19,714.70	349.60	186.00	284.30	273.30	91.11%
Concentration	ppb	4,377.27	2,269.44	1,588.63	2,745.11	55.28	30.17	43.51	42.99	
Concentration	ug/dscm	11,574.01	6,000.65	4,200.52	7,258.39	146.16	79.78	115.04	113.66	
Mass Emission	lb/hr	0.1145	0.0542	0.0371	**0.0686**	0.0079	0.0042	0.0063	**0.0061**	
		Lead (Pb) Emissions (Method 29)				Lead (Pb) Emissions (Method 29)				
ug of Sample	ug	25,172.96	17,113.42	11,037.55	17,774.64	796.80	409.53	470.17	558.83	86.02%
Concentration	ppb	1,106.62	694.18	523.04	774.61	38.64	20.38	22.07	27.03	
Concentration	ug/dscm	9,539.64	5,984.18	4,508.88	6,677.57	333.12	175.67	190.25	233.01	
Mass Emission	lb/hr	0.1605	0.0637	0.0460	**0.0901**	0.0180	0.0092	0.0105	**0.0126**	
		Manganese (Mn) Emissions (Method 29)				Manganese (Mn) Emissions (Method 29)				
ug of Sample	ug	891.20	599.06	372.00	620.75	15.54	7.74	9.59	10.96	88.00%
Concentration	ppb	144.12	91.43	66.54	100.70	2.84	1.45	1.70	2.00	
Concentration	ug/dscm	329.45	209.01	152.11	230.19	6.50	3.32	3.88	4.57	
Mass Emission	lb/hr	0.0039	0.0021	0.0014	**0.0025**	0.0004	0.0002	0.0002	**0.0003**	
		Nickel (Ni) Emissions (Method 29)				Nickel (Ni) Emissions (Method 29)				
ug of Sample	ug	799.26	699.42	379.41	626.03	72.04	29.98	29.21	43.74	88.76%
Concentration	ppb	137.11	108.05	61.68	102.28	12.33	5.26	4.84	7.48	
Concentration	ug/dscm	334.91	263.95	150.67	249.84	30.12	12.86	11.82	18.27	
Mass Emission	lb/hr	0.0118	0.0101	0.0047	**0.0089**	0.0016	0.0007	0.0007	**0.0010**	
		Selenium (Se) Emissions (Method 29)				Selenium (Se) Emissions (Method 29)				
ug of Sample	ug	≤ 11.37	≤ 23.20	≤ 8.55	≤ 14.38	≤ 2.50	≤ 2.50	≤ 2.50	≤ 2.50	33.33%
Concentration	ppb	≤ 1.42	≤ 2.53	≤ 1.05	≤ 1.67	≤ 0.32	≤ 0.33	≤ 0.31	≤ 0.32	
Concentration	ug/dscm	≤ 4.68	≤ 8.31	≤ 3.43	≤ 5.47	≤ 1.05	≤ 1.07	≤ 1.01	≤ 1.04	
Mass Emission	lb/hr	≤ 0.00012	≤ 0.00020	≤ 0.00012	**≤ 0.00015**	≤ 0.0001	≤ 0.0001	≤ 0.0001	**≤ 0.0001**	
		Silver (Ag) Emissions (Method 29)				Silver (Ag) Emissions (Method 29)				
ug of Sample	ug	≤ 3.06	≤ 9.22	≤ 10.10	≤ 10.79	≤ 0.73	≤ 0.53	≤ 0.50	≤ 0.59	80.00%
Concentration	ppb	≤ 1.08	≤ 0.73	≤ 0.92	≤ 0.90	≤ 0.07	≤ 0.05	≤ 0.05	≤ 0.06	
Concentration	ug/dscm	≤ 4.85	≤ 3.25	≤ 4.12	≤ 4.08	≤ 0.31	≤ 0.23	≤ 0.20	≤ 0.25	
Mass Emission	lb/hr	≤ 0.00007	≤ 0.00004	≤ 0.00004	**≤ 0.00005**	≤ 0.00002	≤ 0.00001	≤ 0.00001	**≤ 0.00001**	
		Zinc (Zn) Emissions (Method 29)				Zinc (Zn) Emissions (Method 29)				
ug of Sample	ug	9,539.80	7,920.70	5,023.70	7,494.74	357.70	173.20	174.80	235.23	81.00%
Concentration	ppb	1,291.09	1,014.79	755.68	1,020.52	54.98	27.32	26.01	36.10	
Concentration	ug/dscm	3,511.56	2,760.07	2,055.33	2,775.65	149.54	74.29	70.73	98.19	
Mass Emission	lb/hr	0.0393	0.0258	0.0187	**0.0279**	0.0081	0.0039	0.0039	**0.0053**	

Table 1-4. Summary of Unit Operations for Emission Sources Routed to Northwest Baghouse During PM and Metals Emission Testing Behr Iron & Metal - Rockford, Illinois

Run No.	10/6/15 Time	Rotary Dryer Secondary Exhaust		Doghouse		Babbitt Pot/Babbitt Pot Dross Drum				Foundry Sand Separator[a]		NW Baghouse delta P
		Unit Operating Data[a]	Damper Position	Unit Operating Data	Damper Position	Unit Operating Data	Metal Temp	B. Pot Damper Position	Dross Dm. Damper Position	Unit Operating Data	Damper Position	
	8:30											
	8:35									load 1,625-lbs		
	8:40									0.81-tons		
	8:45											
	8:50											
	8:55									Batch time =70.00-min		
	9:00									Batch time =1.17-hrs		
	9:05											
	9:10											
	9:15									Batch rate =1,393-lb/hr		
	9:20									**Batch rate =0.70-tons/hr**		
	9:25											
	9:30											
	9:35											
	9:40											
	9:45									load 1,921-lbs		
	9:50									0.96-tons		
	9:55											
	10:00											
	10:05									Batch time =70.00-min		
	10:10									Batch time =1.17-hrs		
	10:15											
	10:20											
	10:25									Batch rate =1,647-lb/hr		
	10:30									**Batch rate =0.82-tons/hr**		
	10:35											
	10:40											
	10:45											
	10:50	10:50 load feeder with										
	10:55	720-lbs								load 1,732-lbs		
	11:00	Wauk-88	O		O		765	O	O	0.87-tons	O	4.2
	11:05											
	11:10	Batch time =75.00-min										
	11:15	Batch time =1.25-hrs	O		O		763	O	O	Batch time =65.00-min	O	4.2
	11:20									Batch time =1.08-hrs		
	11:25	Batch rate =576-lb/hr										
	11:30	**Batch rate =0.29-tons/hr**	O	doghouse contains 1 basket of processed copper cable	O	pot contains 4,298-lbs molten lead	763	O	O		O	4.2
	11:35									Batch rate =1,599-lb/hr		

Table 1-4. Summary of Unit Operations for Emission Sources Routed to Northwest Baghouse During PM and Metals Emission Testing Behr Iron & Metal - Rockford, Illinois

Run No.	10/6/15 Time	Rotary Dryer Secondary Exhaust		Doghouse		Babbitt Pot/Babbitt Pot Dross Drum				Foundry Sand Separator[a]		NW Baghouse delta P
		Unit Operating Data[a]	Damper Position	Unit Operating Data	Damper Position	Unit Operating Data	Metal Temp	B. Pot Damper Position	Dross Dm. Damper Position	Unit Operating Data	Damper Position	
Run 1	**11:40**									**Batch rate =0.80-tons/hr**		
	11:45		O		O	11:45 Add 1-lb flux[a] and stir	764	O	O		O	4.2
	11:50			11:50 to 11:50 rotate basket[b]		11:47 skim flux impurities						
	11:55					11:55 add lead Sow 1,528-lbs						
	12:00	end of batch	O		O		728	O	O	load 1,820-lbs	O	4.2
	12:05	12:05 load feeder with								0.91-tons		
	12:10	894-lbs										
	12:15	Wauk-88	O		O		720	O	O		O	4.2
	12:20									Batch time =70.00-min		
	12:25	Batch time =90.00-min								Batch time =1.17-hrs		
	12:30	Batch time =1.50-hrs	O		O		734	O	O		O	4.2
	12:35					12:35 add 2-lbs flux[a]						
	12:40	Batch rate =596-lb/hr				12:43 add 1-lb flux[a]				Batch rate =1,560-lb/hr		
	12:45	**Batch rate =0.30-tons/hr**	O	12:58 to 11:52 change basket[a]	-	12:45 skim flux and impurities	750	O	O	**Batch rate =0.78-tons/hr**	O	4.2
	12:50											
	12:55											
	13:00		O	13:00 to 13:02 rotate basket[b]	O	13:00 add lead sow 2,018-lbs	742	O	O		O	4.2
	13:05											
	13:10									load 2,290-lbs		
	13:15		O		O		738	O	O	1.15-tons	O	4.3
	13:20											
	13:25											
	13:30	end of batch	O		O		745	O	O	Batch time =95.00-min	O	4.3
	13:35	13:35 load feeder with								Batch time =1.58-hrs		
	13:40	1,034-lbs				13:40 add 2-lbs flux[a]						
	13:45	Wauk-88	O		O		753	O	O		O	4.3
	13:50									Batch rate =1,446-lb/hr		
	13:52	Batch time =115.00-min								**Batch rate =0.72-tons/hr**		
	13:55	Batch time =1.92-hrs				13:58 skim flux and impurities						
	14:00		O		O		756	O	O		O	4.3
	14:05	Batch rate =539-lb/hr										
	14:10	**Batch rate =0.27-tons/hr**										
	14:15		O		O		762	O	O		O	4.3
	14:20					14:20 start pouring ingots						
	14:25											
	14:30		O		-		766	O	O		O	4.3
	14:35			14:35 to 14:41 change basket[a]								

Table 1-4. Summary of Unit Operations for Emission Sources Routed to Northwest Baghouse During PM and Metals Emission Testing Behr Iron & Metal - Rockford, Illinois

Run No.	10/6/15 Time	Rotary Dryer Secondary Exhaust		Doghouse		Babbitt Pot/Babbitt Pot Dross Drum				Foundry Sand Separator[a]		NW Baghouse delta P
		Unit Operating Data[a]	Damper Position	Unit Operating Data	Damper Position	Unit Operating Data	Metal Temp	B. Pot Damper Position	Dross Dm. Damper Position	Unit Operating Data	Damper Position	
Run 2	14:40											
	14:45		O		O		760	O	O	load 2,232-lbs	O	4.3
	14:50			14:50 to 14:52 rotate basket[b]						1.12-tons		
	14:55											
	15:00		O		O		757	O	O		O	4.3
	15:05									Batch time =105.00-min		
	15:10					15:10 stop pouring ingots - remove ingots from molds and stack on skids				Batch time =1.75-hrs		
	15:15		O		O		758	O	O		O	4.3
	15:20											
	15:25									Batch rate =1,275-lb/hr		
	15:30	15:30 load feeder with	O		O		762	O	O	**Batch rate =0.64-tons/hr**	O	4.3
	15:35	896-lbs										
	15:40	Wauk-88										
	15:45		O		-		766	O	O		O	4.3
	15:50	Batch time =87.00-min		15:50 to 15:55 change basket[a]								
	15:55	Batch time =1.45-hrs										
	16:00		O	16:04 to 16:06 rotate basket[b]	O	16:03 start pouring ingots	764	O	O		O	4.5
	16:05	Batch rate =618-lb/hr										
	16:10	**Batch rate =0.31-tons/hr**										
	16:15		O		O		764	O	O		O	4.5
	16:20											
	16:25											
	16:30		O		O		762	O	O	load 1,908-lbs	O	4.5
	16:35									0.95-tons		
	16:40											
	16:45		O		O		760	O	O		O	4.4
	16:50					16:50 stop pouring ingots - remove ingots from molds and stack on skids				Batch time =70.00-min		
	16:55									Batch time =1.17-hrs		
	16:57											
	17:00	end of batch	O		O		760	O	O		O	4.2
	17:05	17:05 load feeder with								Batch rate =1,635-lb/hr		
	17:10	1,262-lbs								**Batch rate =0.82-tons/hr**		
	17:15	Wauk-88	O	17:15 to 17:20 change basket[a]	-		764	O	O		O	4.2
	17:20											
	17:25	Batch time =115.00-min				17:25 start pouring ingots						
	17:30	Batch time =1.92-hrs	O		O		766	O	O		O	4.2

Table 1-4. Summary of Unit Operations for Emission Sources Routed to Northwest Baghouse During PM and Metals Emission Testing Behr Iron & Metal - Rockford, Illinois

Run No.	10/6/15 Time	Rotary Dryer Secondary Exhaust		Doghouse		Babbitt Pot/Babbitt Pot Dross Drum				Foundry Sand Separator[a]		NW Baghouse delta P
		Unit Operating Data[a]	Damper Position	Unit Operating Data	Damper Position	Unit Operating Data	Metal Temp	B. Pot Damper Position	Dross Dm. Damper Position	Unit Operating Data	Damper Position	
Run 3	17:35											
	17:40	Batch rate =658-lb/hr		17:40 to 17:42 rotate basket[b]								
	17:45	**Batch rate =0.33-tons/hr**	O		O		765	O	O	load 1,685-lbs	O	4.2
	17:50									0.84-tons		
	17:55											
	18:00		O		O		762	O	O		O	4.2
	18:05									Batch time =70.00-min		
	18:10									Batch time =1.17-hrs		
	18:15		O		O	15:15 stop pouring ingots - remove ingots from molds and stack on skids	760	O	O		O	4.2
	18:20											
	18:25									Batch rate =1,444-lb/hr		
	18:30		O		O		756	O	O	**Batch rate =0.72-tons/hr**	O	4.2
	18:35	end of batch										
	18:40	18:40 load feeder with										
	18:45	952-lbs	O	18:45 to 18:55 change basket[a]	-		757	O	O		O	4.2
	18:50	Wauk-88				18:50 start pouring ingots						
	18:55			18:55 to 18:57 rotate basket[b]						load 1,936-lbs		
	19:00	Batch time =110.00-min	O		O		762	O	O	0.97-tons	O	4.4
	19:05	Batch time =1.83-hrs										
	19:10											
	19:15	Batch rate =519-lb/hr	O		O		765	O	O	Batch time =100.00-min	O	4.4
	19:20	**Batch rate =0.26-tons/hr**								Batch time =1.67-hrs		
	19:25											
	19:30		O		O		765	O	O		O	4.4
	19:35									Batch rate =1,162-lb/hr		
	19:40									**Batch rate =0.58-tons/hr**		
	19:45		O		O		765	O	O		O	4.4
	19:50											
	19:51											
	19:55			19:55 approximate time that basket was removed		stop pouring ingots						
	20:00		O		O	remove ingots from molds and	760	O	O		O	4.4
	20:05					and stack on skids						
	20:10											
	20:15		O		O		759	O	O		O	4.4
	20:20	end of batch										
	20:25											
	20:30		O		O		761	O	O	Finish Batch	O	4.3

a. The Rotary Dryer is a batch operation. A container of raw materials is dumped into a feed hopper and the material is conveyed to the dryer inlet at a controlled rate.

a. close damper, open doghouse door, remove cool basket, load hot basket, close doghouse door, open damper

b. basket is physically rotated to remove debris which falls to the floor and are collected.

a. Ammonium chloride flux. Skimming is performed by hand with slag placed in dross drum. Molten metal is hand ladled into ingots located on tables adjacent to pot.

a. Batch operation. Container placed in feed mechanism and discharged to process at a controlled rate.

Table 1-5. Summary of Worst Case PM and Pb Emissions from the Northwest Baghouse
Behr Iron & Metal - Rockford, Illinois

	October 2015 Test Results						
Pollutant	**Gas Cooler Inlet lb/hr**	**Baghouse Removal Eff %**	**Controlled Gas Cooler Emissions lb/hr**	**Uncontrolled Foundry Sand Separator Emissions lb/hr**	**Baghouse Removal Eff %**	**Controlled Foundry Sand Separator Emissions lb/hr**	**Total Northwest Baghouse Emissions lb/hr**
Filterable Particulate (PM)[a]	0.4290	94.70%	0.0228	4.3590	94.70%	0.2312	0.2540
Lead (Pb)[b]	0.0419	86.02%	0.0059	0.0482	86.02%	0.0067	**0.0126**

	October 2015 Results			October 2014 Test Results			
Pollutant	**Gas Cooler Inlet lb/hr**	**Baghouse Removal Eff %**	**Controlled Gas Cooler Emissions lb/hr**	**Uncontrolled Rotary Lead Recovery Furnace Emissions lb/hr**	**Baghouse Removal Eff %**	**Controlled Rotary Lead Recovery Furnace Emissions lb/hr**	**Estimated Total Northwest Baghouse Emissions lb/hr**
Filterable Particulate (PM)[a]	0.4290	94.70%	0.0228	9.2750	99.12%	0.0816	**0.1043**
Lead (Pb)[b]	0.0419	86.02%	0.0059	0.002308	78.60%	0.00049	0.0064

a. Worst case particulate emission rate for the Northwest Baghouse stack is the combination of the controlled 2015 Gas Cooler emissions and the controlled 2014 Lead Recovery Rotary Furnace emissions.

b. Worst case lead emission rate for the Northwest Baghouse stack is the combined controlled 2015 emissions from the Gas Cooler Inlet and the controlled 2015 emissions from the Foundry Sand Separator.

This Page Left Blank

Table 1-6. Summary of PM and Metals Emissions Testing - Rotary Dryer Primary Exhaust Duct
Behr Iron & Metal - Rockford, Illinois

Parameter	Units	Rotary Dryer Primary Exhaust Hood Duct Downstream of Dryer and Upstream of TPU Chamber Exhaust Duct				October 2014 TPU Baghouse Control Eff
		Run 1	Run 2	Run 3	Average	
Source Condition		Normal	Normal	Normal		
Date		10/7/2015	10/7/2015	10/7/2015		
Run Start Time		8:20	11:05	13:48		
Run End Time		10:20	13:05	15:48		
		Exhaust Duct Conditions				
Average Gas Temperature	°F	450.9	411	555.8	472.6	
Flue Gas Moisture	% Vol	2.30%	2.20%	2.80%	2.40%	
Average Flue Pressure	in Hg	29.02	29.35	29.35	29.24	
Gas Sample Volume	dscf	81.593	87.454	88.732	85.926	
Average Gas Velocity	ft/sec	0	0	0	0	
Gas Volumetric Flow Rate	acfm	0	0	0	0	
Gas Volumetric Flow Rate	dscfm	0	0	0	0	
Gas Volumetric Flow Rate	scfm	0	0	0	0	
Average % CO_2 (dry)	% Vol	0.0	0.0	0.0	0.0	
Average % O_2 (dry)	% Vol	20.9	20.9	20.9	20.9	
		Filterable PM - Single Point Concentration (Method 5)				
Grams Collected	gr	0.7500	0.6159	0.9756	0.7805	93.46%
PM Concentration in Sample Volume	grains/dscf	0.1418	0.1087	0.1697	0.1401	
		Antimony (Sb) Single Point Concentration (Method 29)				
ug of Sample	ug	35.38	40.75	≤ 27.16	≤ 34.43	
Metal Concentration in Collected Sample	ppb	3.02	3.25	≤ 2.13	≤ 2.80	
Concentration in Collected Sample Volume	ug/dscm	15.31	16.46	≤ 10.81	≤ 14.19	
		Arsenic (As) Single Point Concentration (Method 29)				
ug of Sample	ug	≤ 20.26	≤ 20.20	≤ 20.36	≤ 20.27	
Metal Concentration in Collected Sample	ppb	≤ 2.81	≤ 2.62	≤ 2.60	≤ 2.68	
Concentration in Collected Sample Volume	ug/dscm	≤ 8.77	≤ 8.16	≤ 8.10	≤ 8.34	
		Barium (Ba) Single Point Concentration (Method 29)				
ug of Sample	ug	≤ 151.50	≤ 151.50	≤ 153.80	≤ 152.27	
Metal Concentration in Collected Sample	ppb	≤ 11.48	≤ 10.71	≤ 10.71	≤ 10.97	
Concentration in Collected Sample Volume	ug/dscm	≤ 65.57	≤ 61.18	≤ 61.21	≤ 62.65	
		Beryllium (Be) Single Point Concentration (Method 29)				
ug of Sample	ug	≤ 5.05	≤ 5.05	≤ 5.05	≤ 5.05	
Metal Concentration in Collected Sample	ppb	≤ 5.83	≤ 5.44	≤ 5.36	≤ 5.54	
Concentration in Collected Sample Volume	ug/dscm	≤ 2.19	≤ 2.04	≤ 2.01	≤ 2.08	
		Cadmium (Cd) Single Point Concentration (Method 29)				
ug of Sample	ug	6.55	≤ 5.00	≤ 5.00	≤ 5.52	
Metal Concentration in Collected Sample	ppb	0.61	≤ 0.43	≤ 0.43	≤ 0.49	
Concentration in Collected Sample Volume	ug/dscm	2.83	≤ 2.02	≤ 1.99	≤ 2.28	

Table 1-6. Summary of PM and Metals Emissions Testing - Rotary Dryer Primary Exhaust Duct
Behr Iron & Metal - Rockford, Illinois

Parameter	Units	Rotary Dryer Primary Exhaust Hood Duct Downstream of Dryer and Upstream of TPU Chamber Exhaust Duct				October 2014 TPU Baghouse Control Eff
		Run 1	Run 2	Run 3	Average	
		Chromium (Cr) Single Point Concentration (Method 29)				
ug of Sample	ug	4,369.73	2,839.40	1,710.28	2,973.14	
Metal Concentration in Collected Sample	ppb	874.32	530.05	314.67	573.01	
Concentration in Collected Sample Volume	ug/dscm	1,891.27	1,146.57	680.68	1,239.51	
		Cobalt (Co) Single Point Concentration (Method 29)				
ug of Sample	ug	740.23	1,451.58	906.46	1,032.76	
Metal Concentration in Collected Sample	ppb	130.67	239.06	147.14	172.29	
Concentration in Collected Sample Volume	ug/dscm	320.38	586.16	360.77	422.44	
		Copper (Cu) Single Point Concentration (Method 29)				
ug of Sample	ug	66,316.30	149,008.10	481,028.10	232,117.50	
Metal Concentration in Collected Sample	ppb	10,855.26	22,756.46	72,404.71	35,338.81	
Concentration in Collected Sample Volume	ug/dscm	28,702.54	60,170.65	191,446.27	93,439.82	
		Lead (Pb) Single Point Concentration (Method 29)				
ug of Sample	ug	3,221.56	1,930.96	2,395.56	2,516.03	
Metal Concentration in Collected Sample	ppb	161.75	90.45	110.60	120.93	93.46%
Concentration in Collected Sample Volume	ug/dscm	1,394.33	779.74	953.42	1,042.50	
		Manganese (Mn) Single Point Concentration (Method 29)				
ug of Sample	ug	8,859.20	3,589.23	636.44	4,361.62	
Metal Concentration in Collected Sample	ppb	1,677.42	634.05	110.81	807.43	
Concentration in Collected Sample Volume	ug/dscm	3,834.37	1,449.36	253.30	1,845.68	
		Nickel (Ni) Single Point Concentration (Method 29)				
ug of Sample	ug	46,604.44	29,908.12	21,307.49	32,606.68	
Metal Concentration in Collected Sample	ppb	8,257.54	4,944.10	3,471.62	5,557.75	
Concentration in Collected Sample Volume	ug/dscm	20,171.00	12,077.14	8,480.25	13,576.13	
		Selenium (Se) Single Point Concentration (Method 29)				
ug of Sample	ug	≤ 58.92	≤ 102.50	≤ 51.20	≤ 70.87	
Metal Concentration in Collected Sample	ppb	≤ 7.76	≤ 12.60	≤ 6.20	≤ 8.85	
Concentration in Collected Sample Volume	ug/dscm	≤ 25.50	≤ 41.39	≤ 20.38	≤ 29.09	
		Silver (Ag) Single Point Concentration (Method 29)				
ug of Sample	ug	≤ 10.10	≤ 10.10	≤ 18.10	≤ 12.77	
Metal Concentration in Collected Sample	ppb	≤ 0.97	≤ 0.91	≤ 1.61	≤ 1.16	
Concentration in Collected Sample Volume	ug/dscm	≤ 4.37	≤ 4.08	≤ 7.20	≤ 5.22	
		Zinc (Zn) Single Point Concentration (Method 29)				
ug of Sample	ug	103,017.70	29,219.50	4,391.80	45,543.00	
Metal Concentration in Collected Sample	ppb	16,393.39	4,338.15	642.65	7,124.73	
Concentration in Collected Sample Volume	ug/dscm	44,587.37	11,799.07	1,747.91	19,378.12	

Table 1-7. Summary of Unit Operations for Emission Sources Routed to TPU Baghouse During PM and Metals Emission Testing Behr Iron & Metal - Rockford, Illinois

Run No.	10/7/15 Time	Rotary Dryer Primary Exhaust Hooda		
		Batch Data	Dryer Temp	Damper Position
	8:00			O
	8:05			
	8:10			
	8:15			O
	8:20			
	8:25			
	8:30			O
	8:35			
	8:40			
	8:45	8:45 load feeder with		O
	8:50	2,364-lbs		
	8:55	C67300 Brass Turnings		
	9:00			O
	9:05	Batch time =185.00-min		
	9:10	Batch time =3.08-hrs		
	9:15			O
Run 1	9:20	Batch rate =767-lb/hr		
	9:25	**Batch rate =0.38-tons/hr**		
	9:30			O
	9:35			
	9:40			
	9:45			O
	9:50			
	9:55			
	10:00			O
	10:05			
	10:10			
	10:15			O
	10:20			
	10:25			
	10:30			O
	10:35			
	10:40			
	10:45			O
	10:50			
	10:55			
	11:00			O

Table 1-7. Summary of Unit Operations for Emission Sources Routed to TPU Baghouse During PM and Metals Emission Testing Behr Iron & Metal - Rockford, Illinois

Run No.	10/7/15 Time	Rotary Dryer Primary Exhaust Hooda		
		Batch Data	Dryer Temp	Damper Position
Run 2	11:05			
	11:10			
	11:15			O
	11:20			
	11:25			
	11:30			O
	11:35			
	11:40			
	11:45	end of batch		O
	11:50	11:50 load feeder with		
	11:55	404-lbs		
	12:00	C917 Brass Turnings		O
	12:05			
	12:10	Batch time =55.00-min		
	12:15	Batch time =0.92-hrs		O
	12:20			
	12:25	Batch rate =441-lb/hr		
	12:30	**Batch rate =0.22-tons/hr**		O
	12:35			
	12:40	end of batch		
	12:45	12:45 load feeder with		O
	12:50	930-lbs		
	12:55	C917 Brass Turnings		
	13:00			O
	13:05	Batch time =110.00-min		
	13:10	Batch time =1.83-hrs		
	13:15			O
	13:20	Batch rate =507-lb/hr		
	13:25	**Batch rate =0.25-tons/hr**		
	13:30			O
	13:35			
	13:40			

Table 1-7. Summary of Unit Operations for Emission Sources Routed to TPU Baghouse During PM and Metals Emission Testing Behr Iron & Metal - Rockford, Illinois

Run No.	10/7/15 Time	Rotary Dryer Primary Exhaust Hooda		
		Batch Data	Dryer Temp	Damper Position
Run 3	13:48			O
	13:50			
	13:55			
	14:00			O
	14:05			
	14:10			
	14:15			O
	14:20			
	14:25			
	14:30	end of batch		O
	14:35	14:45 load feeder with		
	14:40	1,654-lbs		
	14:45	C917 Brass Turnings		O
	14:50			
	14:55	Batch time =105.00-min		
	15:00	Batch time =1.75-hrs		O
	15:05			
	15:10	Batch rate =945-lb/hr		
	15:15	**Batch rate =0.47-tons/hr**		O
	15:20			
	15:25			
	15:30			O
	15:35			
	15:40			
	15:45			O
	15:48			
	15:50			
	15:55			
	16:00			O
	16:05			
	16:10			
	16:15	end of batch		O
	16:20	16:20 load feeder with		
	16:25	930-lbs		
	16:30	C917 Brass Turnings		O
	16:35			
	16:40	Batch time =85.00-min		
	16:45	Batch time =1.42-hrs		O
	16:50			
	16:55	Batch rate =656-lb/hr		
	17:00	**Batch rate =0.33-tons/hr**		O
	17:05			
	17:10			
	17:15			O
	17:20			
	17:25			
	17:30			O
	17:35			
	17:40	end of batch		
	17:45	14:45 load feeder with		O
	17:50	974-lbs		

Table 1-7. Summary of Unit Operations for Emission Sources Routed to TPU Baghouse During PM and Metals Emission Testing Behr Iron & Metal - Rockford, Illinois

Run No.	10/7/15 Time	Rotary Dryer Primary Exhaust Hooda		
		Batch Data	Dryer Temp	Damper Position
	17:55	C917 Brass Turnings		
	18:00			O
	18:05	Batch time =75.00-min		
	18:10	Batch time =1.25-hrs		
	18:15			O
	18:20	Batch rate =779-lb/hr		
	18:25	**Batch rate =0.39-tons/hr**		
	18:30			O
	18:35			
	18:40			
	18:45			O
	18:50			
	18:55	end of batch		
	19:00	19:00 load feeder with		O
	19:05	998-lbs		
	19:10	C917 Brass Turnings		
	19:15			O
	19:20	Batch time =105.00-min		
	19:25	Batch time =1.75-hrs		
	19:30			O
	19:35	Batch rate =570-lb/hr		
	19:40	**Batch rate =0.29-tons/hr**		
	19:45			O
	19:50			
	19:55			
	20:00			O
	20:05			
	20:10			
	20:15			O
	20:20			
	20:25			
	20:30			O
	20:35			
	20:40	end of batch		
	20:45	14:45 load feeder with		O
	20:50	1,000-lbs		
	20:55	C917 Brass Turnings		
	21:00			O
	21:05	Batch time =81.00-min		
	21:10	Batch time =1.35-hrs		
	21:15			O
	21:20	Batch rate =741-lb/hr		
	21:25	**Batch rate =0.37-tons/hr**		
	21:30			O
	21:35			
	21:40			
	21:45			O
	21:50			
	21:55			
	22:00			O
	22:05	end of batch		
	22:10			
	22:15			O

Table 1-8. Summary of Emission Unit Production Rates
PM and Metals Emission Testing
Behr Iron & Metal - Rockford Facility

Baghouse	Emission Unit	Permitted Rate (tons/hr)	Test Date	Total Material Processed During Test Day (tons)	Total Operating Time During Test Day (hrs)	Average Material Processing Rate During Testing (tph)	% of Permitted Material Throughput Rate	Maximum Batch Processing Rate (tph)	% of Permitted Material Throughput Rate
Blue	Sweeco Sand Separator	0.25	10/07/15	2.05	9.22	0.22	89%	0.27	108%
	Lead Pot 2[a]	1.05	10/07/15	5.13	13.55	0.38	36%		
	Lead Pot 3[a]	1.05	10/07/15	5.11	14.50	0.35	34%		
Northwest	Rotary Dryer (Secondary Exhaust)	1.06	10/06/15	2.88	9.50	0.30	29%	0.40	38%
	Doghouse[b]	NA	10/06/15			0.83 cycles/hr			
	Babbitt Pot[c]	0.75	10/06/15	3.93	8.17	0.48	64%		
	Foundry Sand Separator	0.75	10/06/15	8.57	11.92	0.72	96%	0.82	110%
TPU	Rotary Dryer - (Primary Exhaust)	1.06	10/07/15	4.62	13.30	0.35	33%	0.47	45%

a. Includes emissions from shared dross drum.
b. Doghouse is used to cool and remove debris from processed baskets of material removed from TPU. Baskets are not weight before cooling. The Doghouse is only used to process baskets from TPU.
c. Includes Babbitt Pot dross drum.

Permitted Emission Units Not Operated During Testing

TPU 1	0.25	Not included in testing requirements for this event. Previously tested for PM and Pb emissions in Oct. 2014.
TPU 2	0.25	Not included in testing requirements for this event. Previously tested for PM and Pb emissions in Oct. 2014.
Crucible Furnace	0.225	Not included in testing requirements for this event.
Scrap Hammermill w/ Cyclone	9.06	Not included in testing requirements for this event. Not controlled by baghouses identified for testing
Lead Recovery Rotary Furnace	1.00	Not included in testing requirements for this event. Doesn't operate simultaneously with Foundry Sand Separtor.
Brass Sorting Table	0.31	Not included in testing requirements for this event. Located at Quaker Road facility.

This Page Left Blank

RK & Associates, Inc.

Emission Test Report
Particulate and Metals Emissions

Behr Iron & Metal - Rockford, Illinois
Site ID No.: P201030AB

January 19, 2016

APPENDIX A

TEST PROTOCOL

RK
& Associates, Inc.

This Page Left Blank

August 27, 2015

R11379-2.5

Compliance Tracker, AE-17J
Air Enforcement and Compliance Assurance Branch
US Environmental Protection Agency - Region 5
77 W Jackson Boulevard
Chicago, IL 60604

Revised Particulate and Metals Emissions Testing Protocol
Behr Iron & Metal – 1100 Seminary Street – Rockford, Illinois 61104

To Whom This May Concern:

Please find attached a revised Emissions Testing Protocol for measuring mass particulate and metals emission rates at Behr Iron & Metal, Inc. (Behr), in Rockford, Illinois.

The attached protocol was prepared in accordance with Appendix B, Item 1 of USEPA's Request to Provide Information Pursuant to the Clean Air Act and includes the following revisions to address USEPA Comments.

- The Sweeco Sand Separator and Rotary Dryer will remain in the testing program.

- Testing of the TPU control system has been limited to testing uncontrolled emissions in the exhaust duct from the Rotary Dryer primary exhaust hood. Controlled emissions from the Rotary Dryer will be calculated by applying previously measured TPU baghouse PM and Lead removal efficiencies to the measured uncontrolled PM and metals emissions, eliminating the requirement to sample for PM and metals in the TPU baghouse stack. A Method 9 Opacity test will be performed at the TPU baghouse stack during testing of the Rotary Dryer primary exhaust.

  This change also means that operational status of the TPUs during testing of the Rotary Dryer primary hood exhaust will not impact testing. Operation of the TPU during testing of the Rotary Dryer primary exhaust will be at Behr's discretion based on facility work load. If the TPU are operated, the process operating data will be recorded and presented in the test report.

- The description of the Method 29 has been modified to specifically identify the portions of the method that must be performed when using Method 29 data to determine particulate emissions.

- A description of the required audit samples, required by the Stationary Source Audit Sample (SSAS) program has been added in Section 3.6 of the revised protocol.

2 SOUTH 631 ROUTE 59; SUITE B
WARRENVILLE, IL 60555
(630) 393-9000
FAX (630) 393-9111

RK & Associates, Inc.

Certification Statement:

I certify under penalty of law that I have examined and am familiar with the information in the enclosed documents, including all attachments. Based on my inquiry of those individuals with primary responsibility for obtaining the information, I certify that the statements and information are, to the best of my knowledge and belief, true and complete. I am aware that there are significant penalties for knowingly submitting false statements and information including the possibility of fines or imprisonment pursuant to Section 113(c)(2) of the Clean Air Act and 18 U.S.C. §§ 1001 and 1341.

Signature: _____ Date: 8/28/2015

Name: Ron Coupar

Attachment: Particulate and Metals Emissions Testing Protocol
Behr Iron *& metals, Inc. – Rockford, Illinois
Dated August 26, 2015

If you have any questions, or require any additional information please do not hesitate to contact Mr. Ron Coupar, EHS Manager for Behr at 815-987-2770 (rcoupar@jbehr.com) or me at 630-393-9000 (jpinion@rka-inc.com).

Yours very truly,
RK & Associates, Inc.

John G. Pinion
Associate Engineer

cc: Mr. Ron Coupar – EHS Manager – Behr Iron & Metal – Rockford, Illinois

Particulate and Metals Emissions Testing Protocol

Behr Iron & Metal – Rockford, Illinois
Site Identification No.: 201030AB

August 27, 2015

R11379-2.5

Prepared for:
Behr Iron & Metal
1100 Seminary Street
Rockford, Illinois 61104
Attn: Mr. Ron Coupar – EHS Manager

Submitted to:
Compliance Tracker, AE-17J
Air Enforcement and Compliance Assurance Branch
US Environmental Protection Agency
Region 5
77 W Jackson Boulevard
Chicago, IL 60604

RK & Associates, Inc.
2 South 631 Route 59
Suite B
Warrenville, Illinois 60555
Phone: 630-393-9000
Fax: 630-393-9111

This Page Left Blank

TABLE OF CONTENTS

EXECUTIVE SUMMARY 1

1.0 INTRODUCTION 3

1.1 Facility Location 7

1.2 Facility Contact Information 7

2.0 PROCESS DESCRIPTION AND PROPOSED TESTING 9

2.1 Emission Units Controlled by the Blue Baghouse 9

2.1.1 Lead Pots 2 and 3 Lead Pot Dross Drum 12

2.1.2 Sweeco Sand Separator 13

2.2 Emission Units Controlled by the Northwest Baghouse 14

2.2.1 Doghouse 17

2.2.2 Babbit Pot 18

2.2.3 Foundry Sand Separator 19

2.2.4 Rotary Dryer – Secondary Exhaust Hood 20

2.3 Rotary Dryer Primary Exhaust Controlled by the TPU Control System 21

2.3.1 Rotary Dryer – Primary Exhaust Hood 24

3.0 SPECIFIC TEST PROCEDURES 27

3.1 Method 1 – Sample and Velocity Determination 27

3.2 Method 2 – Volumetric Flow Rate Determination 27

3.3 Method 3 – Oxygen (O2)/Carbon Dioxide (CO2) Determination 27

3.4 Method 4 – Determination of Moisture Content 27

3.5 Method 29 – Determination of Particulate and Metals Emissions 27

3.6 Method 29 Audit Samples 28

4.0 PROJECT PERSONNEL 31

5.0 TEST SCHEDULE 33

6.0 QUALITY ASSURANCE PROCEDURES 35

7.0 TEST REPORT 37

FIGURES

Figure 1 Site Location Map 4

Figure 2 Site Layout Diagram – Quaker Road Location 5

Figure 3 PM and Metals Test Locations for Rotary Dryer Primary Exhaust 10

Figure 4 PM and Metals Test Locations for Emission Units Controlled by the Northwest Baghouse 15

Figure 5 PM and Metals Test Locations for Emission Units Controlled by the TPU Control System 22

Figure 6 USEPA Method 29 Sampling Train 29

TABLES

Table 2.1-1	Blue Baghouse Emission Sampling Locations	11
Table 2.1-2	Blue Baghouse Test Port Location Information	11
Table 2.2-1	Northwest Baghouse Emission Sampling Locations	16
Table 2.2-2	Northwest Baghouse Test Port Location Information	16
Table 2.2-3	Summary of Emission Unit Operating Conditions	17
Table 2.3-1	TPU Baghouse Emission Sampling Locations	23
Table 2.3-2	TPU Baghouse Test Port Location Information	23
Table 2.3-3	Summary of Emission Unit Operating Conditions	24
Table 5.0-1	Proposed Test Schedule	33

EXECUTIVE SUMMARY

Behr Iron & Metal (Behr) is an existing scrap metal recycling facility located at 1100 Seminary Street in Rockford, Illinois (see Figure 1). Behr collects and segregates non-ferrous mixed metal scrap, primarily aluminum, stainless steels, brass, copper, and lead to create uniform grades of scrap for sale. Existing scrap handling and processing activities include sorting, bailing, briquette forming, sand separation, thermal cleaning and metal refining.

Behr Rockford currently operates under an Illinois Environmental Protection Agency (IEPA) Lifetime Operating Permit (Application No. 85030079; Site ID No. 201030AYB) most recently revised and reissued on May 29, 2008.

Behr received a Request for Additional Information from the USEPA requiring that Behr conduct emission testing to quantify particulate matter and metals emissions from the baghouses used to control emissions from selected emission unit located at Behr's Seminary Street facility. Specifically, USEPA is requiring Behr to…

> *"…quantify the mass emission rate of metals and particulate matter and test for opacity by performing inlet (only at baghouses) and outlet testing using EPA Reference Methods 1 through 5, 9, and 29(excluding analysis for mercury, at the following emission units:"*

i.	*Lead Pot 2*	*vi.*	*Thermal Reduction Unit 1*
ii.	*Lead Pot 3*	*vii.*	*Thermal Reduction Unit 2*
iii.	*Babbitt Pot*	*viii.*	*Particulate Vent Room (Doghouse)*
iv.	*Foundry Sand Separator*	*ix.*	*Rotary Dryer*
v.	*Sweeco Separator*		

Subsequently, USEPA clarified the above requirement to specify that testing was required only at the inlet and outlet of the three baghouses that control emissions from the identified emission units. Each baghouse controls exhausts gases from multiple emission units that are comingled at the baghouse inlet. Therefore, the emissions data generated by this testing program will not identify emission rates from individual emission unit, but will only identify the total combined uncontrolled mass emission rate of particulate matter (PM) and metals entering each baghouse and the total combined controlled mass emission rate of PM and metals discharged from the baghouses to the atmosphere.

The following bullet items describe the proposed deviations from the requested emission testing identified above.

- Sampling controlled emissions from the rotary dryer primary exhaust hood in the TPU baghouse stack (even without the TPUs in operation) will likely contain lead due to the lead-containing particulate from TPU operation that is contained in the baghouse and is impregnated into the filter fabric. Therefore, sampling controlled rotary dryer emissions in the baghouse stack will not provide representative emissions data. Behr proposes to sample uncontrolled

Rotary Dryer PM and metals emissions in the primary exhaust hood duct upstream of the TPU thermal oxidizer. Controlled PM and metals emissions will be calculated using the measured uncontrolled emissions and the previously demonstrated PM and lead removal efficiencies of the TPU baghouse.

- The Request for Additional Information specifically excludes mercury from the required metals analyses. Therefore, this protocol proposes to determine particulate emissions using the Method 29 sampling train. Sections 8.2.6, 8.3.1.1, and 8.3.2 of EPA Method 29 specify procedures that must be used if Method 29 is to be used for determination of particulate emissions. This will eliminate the need to use a Method 5 sampling train at the same time as Method 29.

- At sampling locations that do not have horizontal test ports, unheated flexible Teflon tubing will be used between the outlet of the filter box and in inlet of the impingers. In accordance with section 8.2.8 of Method 29, first three impingers, filter support, back half of the filter housing and connection glassware (which in this case includes the Teflon tubing used between the filter box and the impingers) by thoroughly rinsing with 100 ml of 0.1 N HNO3 using the procedure as applicable in Method 12 section 8.7.3.

- Method 29 audit samples are described in Section 3.6 of this document.

- Based on conversations with the testing subcontractor, the earliest date when sufficient equipment and manpower is available for the above testing program is the week of September 21, 2015.

1.0 SPECIFIC INTRODUCTION

Behr Iron & Metal (Behr) is an existing scrap metal recycling facility located at 1100 Seminary Street and 208 Quaker Road in Rockford, Illinois (see Figure 1). Behr collects and segregates non-ferrous mixed metal scrap, primarily aluminum, stainless steels, brass, copper, and lead to create uniform grades of scrap for sale. Existing scrap handling and processing activities include sorting, bailing, briquette forming, sand separation, thermal cleaning and metal refining.

Behr Rockford currently operates under an Illinois Environmental Protection Agency (IEPA) Lifetime Operating Permit (Application No. 85030079; Site ID No. 201030AYB) most recently revised and reissued on May 29, 2008.

Behr received a Request for Additional Information from the USEPA requiring that Behr conduct emission testing to quantify particulate matter and metals emissions from the baghouses used to control emissions from selected emission unit located at Behr's Seminary Street facility. Specifically, USEPA is requiring Behr to…

> *"…quantify the mass emission rate of metals and particulate matter and test for opacity by performing inlet (only at baghouses) and outlet testing using EPA Reference Methods 1 through 5, 9, and 29(excluding analysis for mercury, at the following emission units:"*

i.	*Lead Pot 2*	*vi.*	*Thermal Reduction Unit 1*
ii.	*Lead Pot 3*	*vii.*	*Thermal Reduction Unit 2*
iii.	*Babbitt Pot*	*viii.*	*Particulate Vent Room (Doghouse)*
iv.	*Foundry Sand Separator*	*ix.*	*Rotary Dryer*
v.	*Sweeco Separator*		

Subsequently, USEPA clarified the above requirement to specify that testing was required only at the inlet and outlet of the three baghouses that control emissions from the identified emission units. Each baghouse controls exhausts gases from multiple emission units that are comingled at the baghouse inlet. Therefore, the emissions data generated by this testing program will not identify emission rates from individual emission unit, but will only identify the total combined uncontrolled mass emission rate of particulate matter (PM) and metals entering each baghouse and the total combined controlled mass emission rate of PM and metals discharged from the baghouses to the atmosphere.

The table below identifies the baghouses that control emissions from each of the listed emission units. The emission units numbers assigned below are the same numbers used to identify the emission numbers in the Request of Additional Information. The order in which the emission units are listed has been changed to more clearly identify the baghouses associated with each unit.

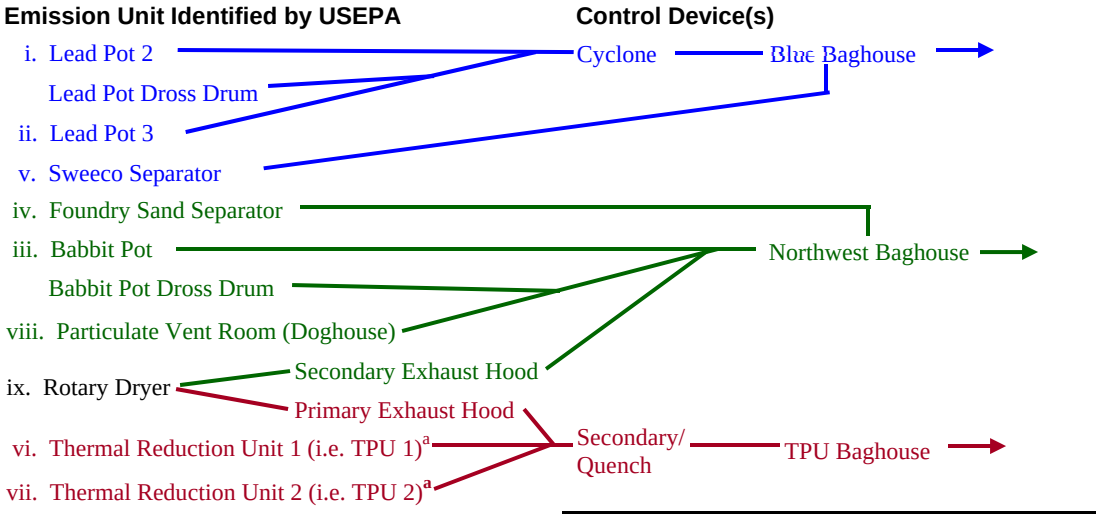

a. Thermal Reduction Unit PM and lead emissions were measured during a test performed in October 2014. The test report was submitted to USEPA for review. Based upon USEPA's review of the test report, the requirement to measure PM and metals emissions from the Thermal Reduction Unit (Units 1 and 2) was eliminated.

A detailed process description for each emission unit is presented in Section 2 of this protocol. A facility layout map showing the location of the emission units and control equipment is presented in Figure 2.

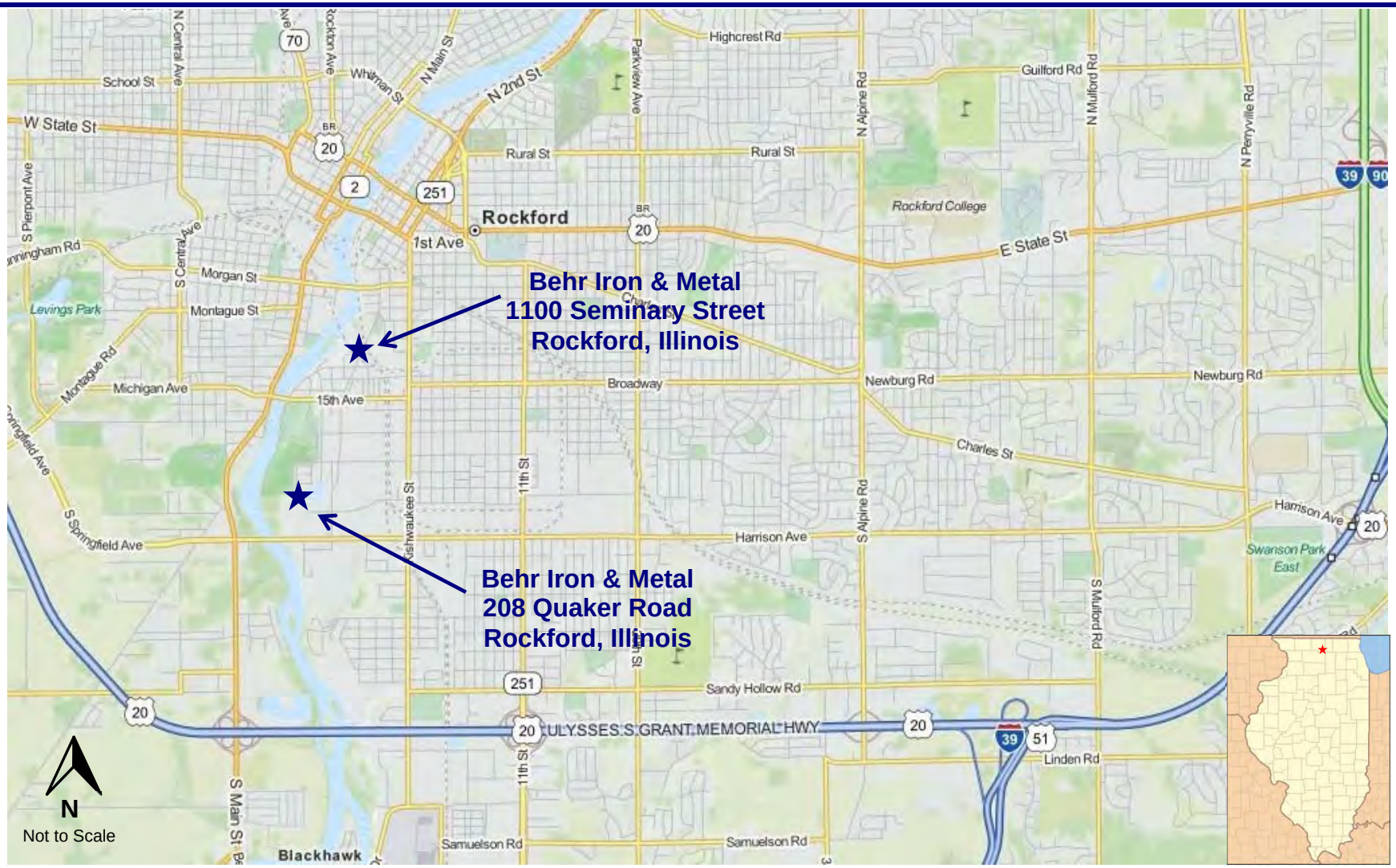

RK & Associates, Inc. 2S631 ROUTE 59, SUITE B WARRENVILLE, IL 60555 630-393-9000/630-393-9111	COMMENTS: Particulate and Metals Emissions Testing Protocol		Site Location Map Behr Iron & Metal -Rockford, Illinois		FIGURE 1
	DRAWN BY::	APPROVED BY:: JGP	PROJECT NUMBER R11379	DATE DRAWN: 08-2015	REVISED DATE

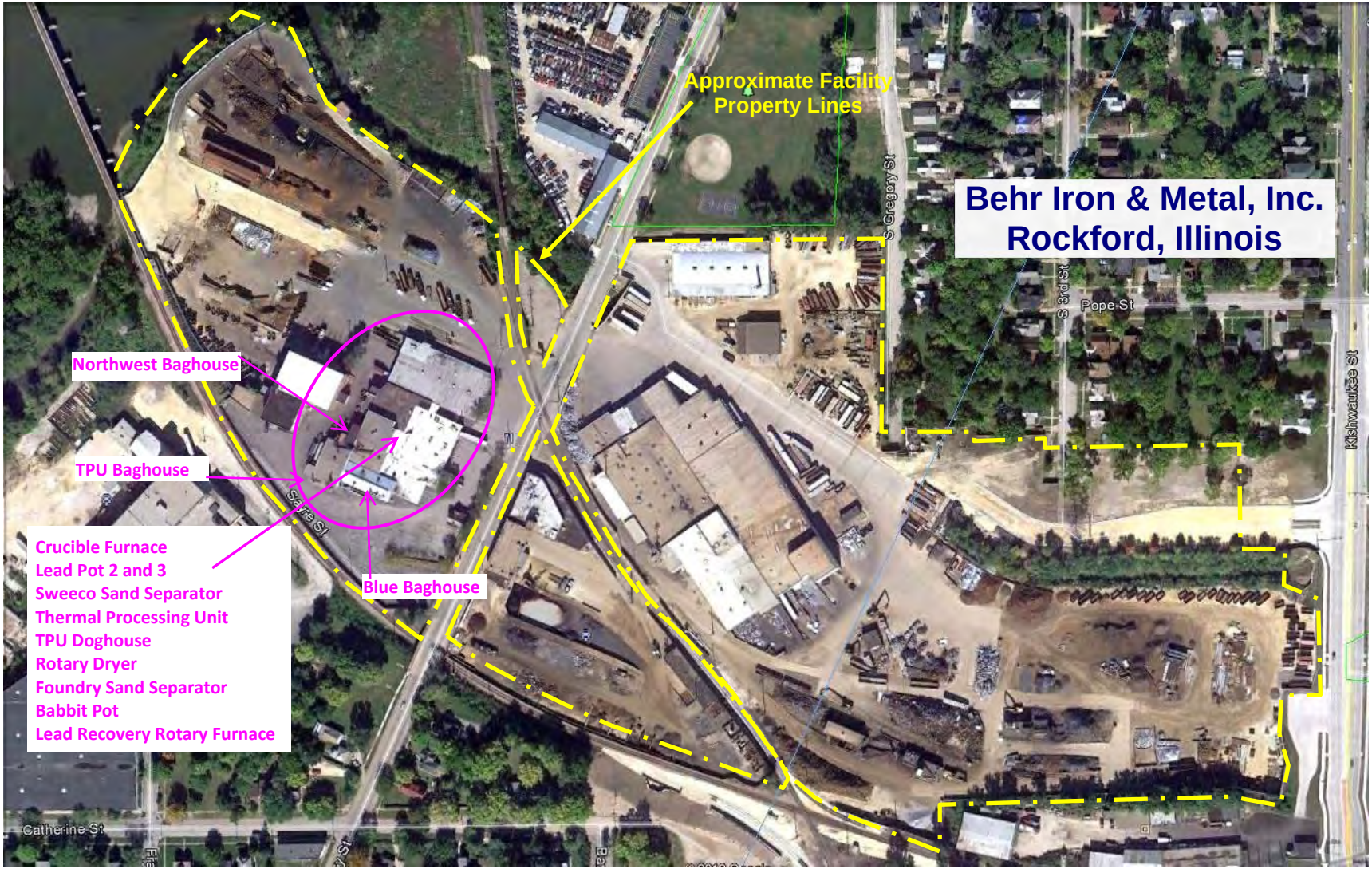

RK & Associates, Inc.
2S631 ROUTE 59, SUITE B
WARRENVILLE, IL 60555
630-393-9000/630-393-9111

COMMENTS: Particulate and Metals Emissions Testing Protocol

Facility Map
Behr Iron & Metal
1100 Seminary Street - Rockford, Illinois

FIGURE: 2

DRAWN BY:	APPROVED BY:	PROJECT NUMBER:	DATE:	REVISED DATE:
JP		R11379	08-2015	

1.1 Facility Location

The emission units discussed herein are located at 1100 Seminary Street in the city of Rockford, Illinois as shown in Figure 1. A Facility Layout map is presented in Figures 2. Facility contact information is provided in Section 1.2 below.

1.2 Facility Contact Information

Business Name:	Behr Iron & Metal
Source Location:	**1100 Seminary Street – Rockford, Illinois 61104** Rockford Northwest Township - Winnebago County Illinois
Latitude/Longitude	42° 15' 21.40" N / 89° 05" 33.05" W – Front Gate
Office/Mailing Address:	1100 Seminary Street, Rockford, Illinois 61104
Facility Contact:	**Mr. Ron Coupar – EHS Manager** **815-987-2770 – rcoupar@behrim.com**
IEPA Site ID No.:	201030AYB
SIC Code:	5093 – Scrap and Waste Materials
NAICS Code:	423930 – Recyclable Material Merchant Wholesalers
Emission Testing Contractor	Qualified and experienced stack testing subcontractor will be selected by Behr.
RKA Contact for Emission Testing	RK & Associates, Inc. John Pinion 630-393-9000 jpinion@rka-inc.com 2S631 Route 59, Suite B Warrenville, Illinois 60555

This Page Left Blank

2.0 PROCESS DESCRIPTION AND PROPOSED TESTING

The following sections present a process description of the emission units addressed in this protocol.

During testing conducted under this protocol, process equipment will be operated at maximum throughput rates and under representative conditions, while utilizing the highest lead content materials.

Emission testing will be performed by Methods 1 through 4 for flow rate and moisture and Method 29 for filterable particulate matter (FPM) and metals at all locations. Method 9 for opacity will be performed at each baghouse exhaust stack. Because mercury has been exempted from required metal analysis, Method 29 will be used to determine particulate emissions following the specific requirements in presented sections 8.2.6, 8.3.1.1, and 8.3.2 of the method. Additional information on the proposed sampling methods is presented in Section 3.

2.1 Emissions Units Controlled by the Blue Baghouse

Emission units controlled by the Blue Baghouse are described below:

<table>
<tr><th>Emission Units Controlled by the Blue Baghouse</th><th colspan="2">Inlet to Blue Baghouse</th></tr>
<tr><td>Lead Pot 2</td><td>Dedicated inlet to Cyclone</td><td rowspan="3">Cyclone exhaust enters baghouse through a dedicated inlet.</td></tr>
<tr><td>Lead Pot 3</td><td rowspan="2">Shared dedicated inlet to Cyclone</td></tr>
<tr><td>Lead Pot Dross Drum</td></tr>
<tr><td>Sweeco Sand Separator</td><td colspan="2">Exhaust enters baghouse through a dedicated inlet</td></tr>
</table>

As depicted in Figure 3, the Lead Pot 2 has a dedicated exhaust duct that routes emissions to a cyclone. The Lead Pot Dross Drum and Lead Pot 3 exhaust ducts merge upstream of the cyclone and enter the cyclone through a second cyclone inlet. The cyclone has a single discharge duct that routes combined lead pot emissions to the inlet of the Blue Baghouse. The exhaust duct from the cyclone to the baghouse inlet does not have the required minimum length of straight unobstructed duct for installation of test ports. Therefore, baghouse inlet emissions contributed by the lead pots and lead pot dross drum must be measured at two separate locations upstream of the cyclone as shown in Figure 3.

The Sweeco Sand Separator has a dedicated exhaust duct that routes emissions directly to the baghouse through a second baghouse inlet. Baghouse inlet emissions contributed by the Sweeco Sand Separator must be measured at a separate location.

Baghouse inlet emission will be determined by simultaneously measuring uncontrolled emissions at three locations. Baghouse outlet emissions will be measured at the existing test ports installed in the baghouse exhaust stack. Based on the above, emission testing at the Blue Baghouse will require simultaneous sampling at four separate locations.

The Blue Baghouse is equipped with a single 42-inch diameter exhaust stack.

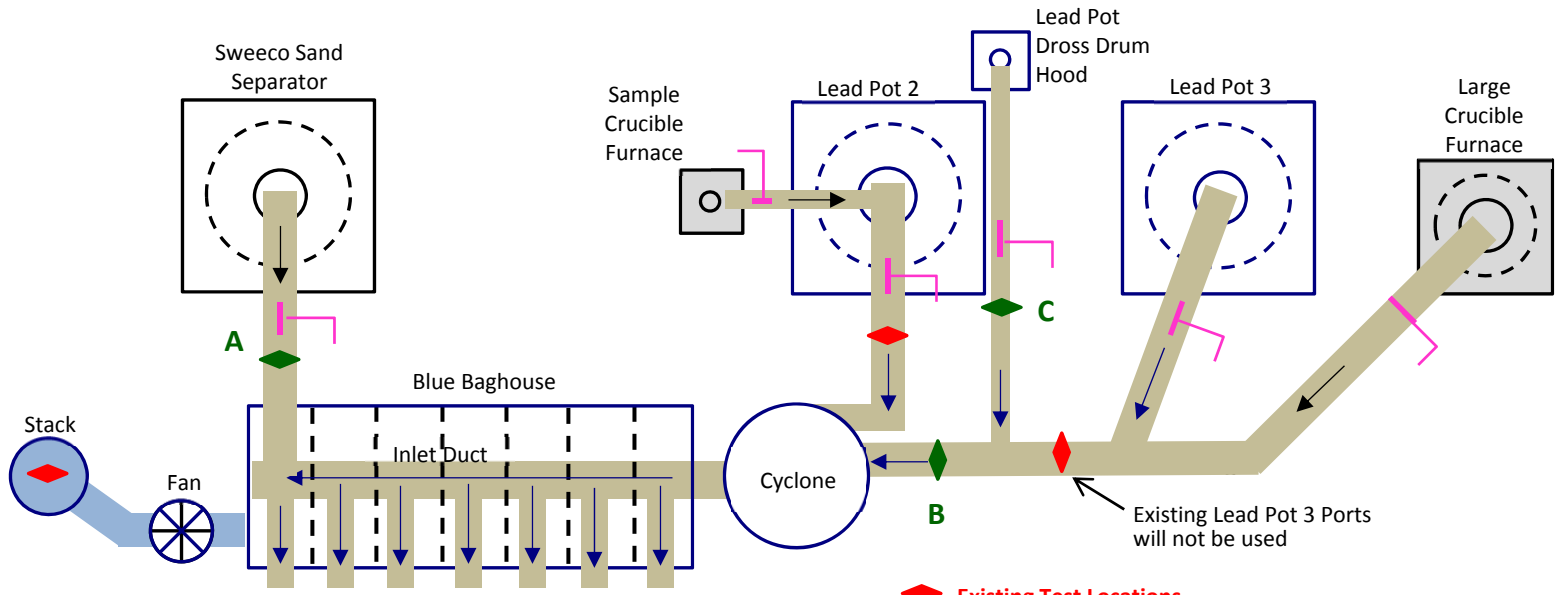

Existing Test Locations

Test Ports to be Installed

A New ports required for Sweeco Sand Separator Exhaust

B New ports for combination of Lead Pot 3 and Dross Drum Emissions.

C Alternate test ports that will be used if new ports at location B do not meet minimum requirements for testing.

RK & Associates, Inc. 2S631 ROUTE 59, SUITE B WARRENVILLE, IL 60555 630-393-9000	COMMENTS: Particulate and Metals Emissions Testing Protocol		PM and Metals Test Locations for Emission Units Controlled by the Blue Baghouse		FIGURE 3
	DRAWN BY::	APPROVED BY:: JGP	PROJECT NUMBER R11379	DATE DRAWN: 08-2015	REVISED DATE

Table 2.1-1 presents a summary of the emission unit operating conditions and anticipated exhaust gas flow conditions at each sampling location.

Table 2.1-1 – Blue Baghouse Emission Sampling Locations

Parameter	Units	Baghouse Inlet Sampling Locations			Blue Baghouse Outlet (Stack)
		Lead Pot 2	Lead Pot 3/ Dross Drum	Sweeco Sand Separator	
Approx. Batch Time	hrs	12	12	NA	
Material (lead) Charge	lbs	6,000 to 10,000	6,000 to 10,000	NA	
Maximum Process Rate	tph	1.05	1.05	0.65	
Average Process Rate	tph	0.75	0.75	0.25	
Molten Metal Temperature	°F	780	780	NA	
Duct Diameter	ft	1.29	1.96	1.75	3.42
Exhaust Gas Flow Rate	scfm	3,600	5,000	5,000	21,500
Exhaust Gas Velocity	ft/sec	50	30	38	42
Exhaust Gas Temperature	°F	100	100	ambient	85
Moisture Content	% Vol	1.50%	1.50%	ambient	1.50%
Test Methods		Methods 1 through 4 for flow rate and moisture Method 29 for PM and metals			
					Method 9 - Opacity

The 2.1-2 summarizes the location of the test ports that will be used for sampling.

Table 2.1-2 Blue Baghouse Test Port Location Information

Test Location	Duct Upstream Diameters	Duct Diameters Downstream
Lead Pot 2 Exhaust	1.8	2.3
Lead Pot 3 /Dross Drum	TBD	TBD
Sweeco Sand Separator	>0.5	>2.0
Baghouse Stack Exhaust	> 0.5	> 2.0

The testing described above requires installation of new test ports at a location upstream of the cyclone to combine Lead Pot 3 and dross drum emissions and to sample the Sweeco Sand Separator exhaust gases. These ports will be installed by Behr and evaluated for cyclonic flow prior to commencement of the first day of testing.

Baghouse operating data that can be collected during the tests is limited to differential pressure which will be manually recorded in 15-minute increments during sampling periods. Baghouse temperature will be collected by test Method 29.

The following sections describe the contributing emission units for the Blue Baghouse inlet and outlet PM and metal testing.

2.1.1 Lead Pots 2 and 3 and Lead Pot Dross Drum

The Lead Pots are static batch melting pots used to melt Babbit scrap, tin/lead solder dross and lead ingots. Each lead pot is located inside of a three-sided metal enclosure with a solid top. The front each enclosure is equipped with a canvas curtain that is lowered during furnace operation to close off the top half of the face of the enclosure as shown in the photographs below. An exhaust duct connects the top of the enclosure to an inlet manifold leading to the Blue Baghouse. The baghouse fan maintains a negative draft inside of the enclosure. Ambient air from the room is drawn into the enclosure and carries particulate emissions to the baghouse.

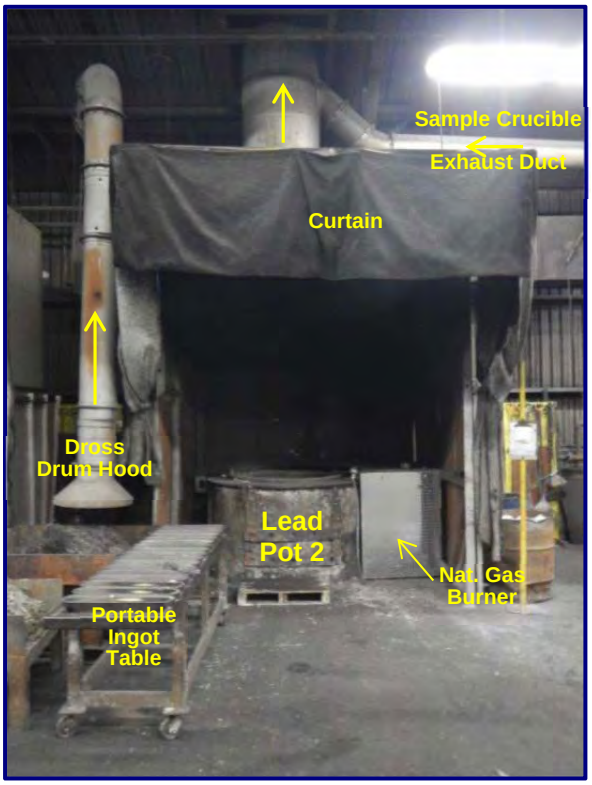

Raw material is manually loaded into the pots as prescribed ratios based on the product to be produced. Each pot can process up to approximately 10,000-lbs of material. Batch times vary from 12 to 24 hours based on size of the batch and the level of activity. Finished material can be held at temperature until facility personnel and equipment are available to ladle the finished product from the pot into ingot molds.

The dross drum is located under a dedicated exhaust hood adjacent to the furnace enclosure that is also connected to the inlet manifold of the Blue Baghouse.

Exhaust from the lead pot enclosures and the dross drum hood pass through a common cyclone (not pictured above) before entering the Blue Baghouse. The cyclone is used to minimize the potential for large hot particles to enter the baghouse.

The following process operating parameters will be manually reported during testing. Temperatures will be recorded at 15-minute intervals. Process operating parameters that will be monitored during testing include:

- types of raw material charged;
- amount of raw material charged;
- charge times and material addition times;
- drossing times;
- molten metal temperature; and,
- Exhaust duct damper position.

There are no other parametric monitors associated the lead pots.

2.1.2 Sweeco Sand Separator

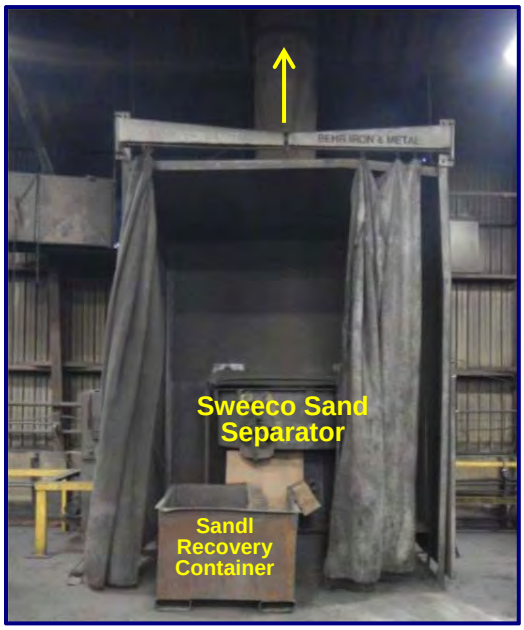

The unit consists of a mechanical separator that is used to process sand cores received from a local foundry. The sand cores are manually placed on the screen. The separator shakes the material on the screen to break up the sand cores and collect metals consisting primarily of brass and aluminum. The sand falls through the screen and is collected in a container. Processed sand is either disposed of offsite at a licensed facility or is further processed through the foundry sand separator. Metal retained on the screen is collected for recycling.

The Sweeco Sand Separator is located in a three sided metal enclosure with a solid top. The front of the enclosure is equipped with a canvas curtain that is drawn closed during operation of the separator. An exhaust duct connects the top of the enclosure to a dedicated inlet manifold leading to the Blue Baghouse. The baghouse fan maintains a negative draft inside of the enclosure. Ambient air from the room is drawn into the enclosure and carries particulate emissions to the baghouse.

The following process operating parameters will be manually reported during testing.

- Types of raw material processed
- Raw material characteristics
- Raw material feed rates
- Exhaust duct damper position

There are no other parametric monitors associated with this unit.

2.2 Emissions Units Controlled by the Northwest Baghouse

Emission units controlled by the Northwest Baghouse include the following.

Emission Units Controlled by the Blue Baghouse	Inlet to Northwest Baghouse
Rotary Dryer (secondary Exhaust hood	Exhaust gases are combined in a single duct that discharges to the gas cooler immediately upstream of the Northwest Baghouse
TPU Doghouse	
Babbit Pot	
Babbit Pot Dross Drum	
Foundry Sand Separator	Exhaust enters baghouse through a dedicated inlet

The Lead Recovery Rotary Furnace also discharges to the Northwest baghouse. Compliance demonstration testing for PM and lead was successfully performed in October 2014. The test report was sent to USEPA for review. Upon completion of its review, USEPA eliminated the requirement for emission testing of the Lead Recovery Rotary Furnace from this test program.

Behr has requested an operating condition that will prohibit simultaneous operation of the Foundry Sand Separator and Lead Recovery Rotary Furnace. The dampers to the Lead Recovery Rotary Furnace will be closed during testing of the Northwest baghouse to ensure representative exhaust flow rates from other operating units.

As depicted in Figure 4, all of the emission units with the exception of the Foundry Sand Separator enter the Northwest baghouse at a common inlet at the entrance to the gas cooler (immediately upstream of the baghouse. Emissions pass through the gas cooler and enter the baghouse. A single set of test ports are located at the entrance to the gas cooler and total combined uncontrolled baghouse inlet emissions from the Doghouse, Babbit Pot (and Babbit Pot Dross Drum, and Rotary Dryer Secondary exhaust hood) will be measured at this location.

The Foundry Sand Separator is equipped with a dedicated exhaust duct that by-passes the gas cooler and enters the baghouse inlet duct at the discharge of the gas cooler immediately upstream of the baghouse inlet (see Figure 4). A separate set of test ports on the Foundry Sand Separator exhaust duct will be used to measure inlet emissions for the Northwest baghouse.

Baghouse inlet emissions will be simultaneously measured at two locations as shown in Figure 4.

The Northwest Baghouse stack is 33-inches in diameter and is equipped with test ports that will be used to sample the total combined baghouse outlet emissions. Baghouse outlet emissions will be sampled simultaneously with baghouse inlet emissions. Based on the above, there will be three simultaneous emission measurement locations for the Northwest baghouse.

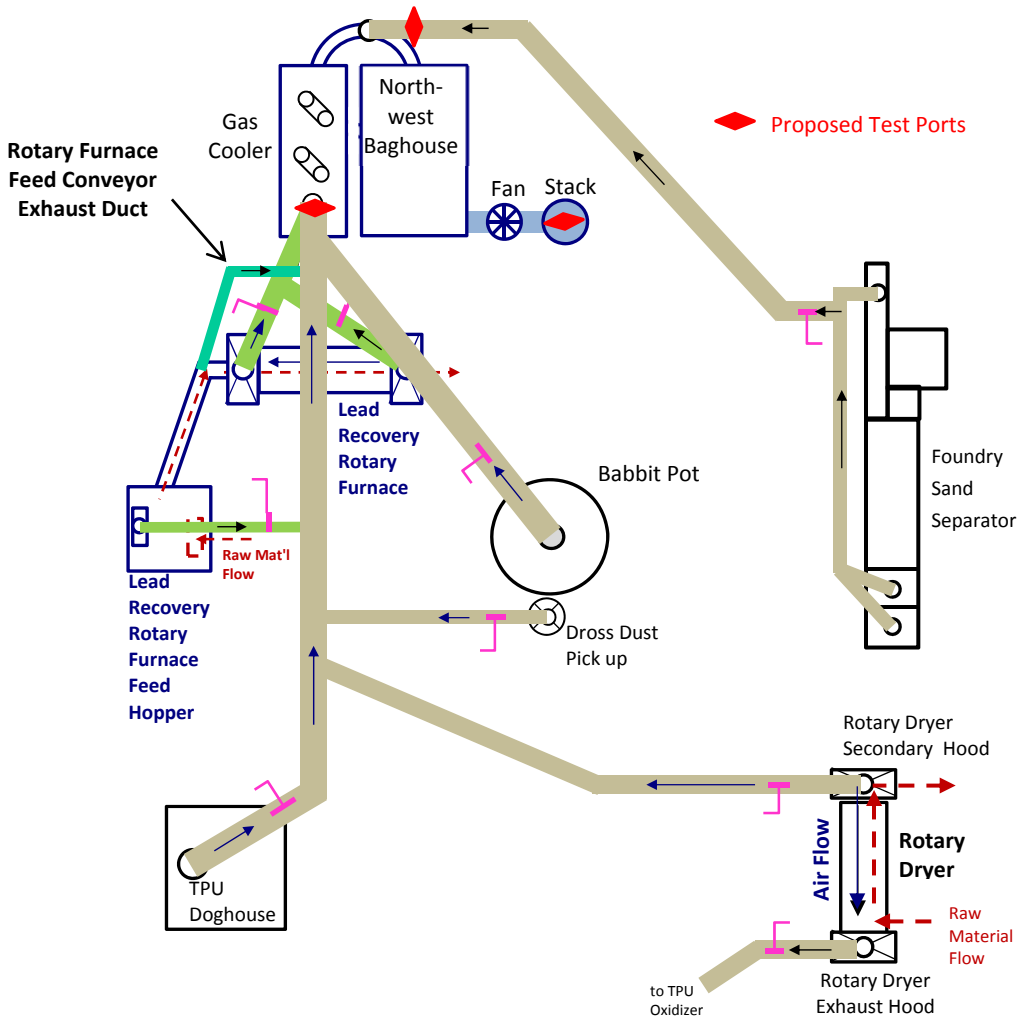

RK & Associates, Inc. 2S631 ROUTE 59, SUITE B WARRENVILLE, IL 60555 630-393-9000	COMMENTS: Particulate and Metals Emissions Testing Protocol		PM and Metals Test Locations for Emission Units Controlled by the Northwest Baghouse		FIGURE 4
	DRAWN BY::	APPROVED BY:: JGP	PROJECT NUMBER R11379	DATE DRAWN: 08-2015	REVISED DATE

The total uncontrolled mass emissions at the inlet of the Northwest baghouse will be the sum of uncontrolled emissions measured at the inlet of the gas cooler plus the uncontrolled emissions from either the Foundry Sand Separator or the Lead Recovery Rotary Furnace, whichever is greater. The uncontrolled PM and lead emission from the Lead Recovery Rotary Furnace were measured in a successful compliance demonstration test performed in October 2014.

If the uncontrolled emissions from the Lead Recovery Rotary Furnace are greater than uncontrolled emissions from the Foundry Sand Separator, the controlled (baghouse outlet emissions) will be the sum of the uncontrolled emissions multiplied by the demonstrated PM and Metals removal efficiency of the Northwest baghouse as determined during this testing program.

Table 2.2-1 presents a summary of the anticipated exhaust gas flow conditions at each sampling location

Table 2.2-1– Northwest Baghouse Emission Sampling Locations

Parameter	Units	Baghouse Inlet Sampling Locations		Northwest Baghouse Stack (Outlet)
		Common Emission Inlet Duct at Entrance to Gas Cooler	Dedicated Baghouse Inlet from Foundry Sand Separator	
Duct Diameter	ft	2.75	1.33	2.75
Exhaust Gas Flow Rate	scfm	12,450	2,500	12,900
Exhaust Gas Velocity	ft/sec	35	53	36
Exhaust Gas Temperature	°F	120	Ambient	90
Moisture Content	% Vol	1.2%	Ambient	1.3%
Test Methods		Methods 1 through 4 for flow rate and moisture Method 29 for PM and metals		
				M9 Opacity

The 2.2-2 summarizes the location of the test ports that will be used for sampling.

Table 2.2-2– Northwest Baghouse Test Port Location Information

Test Location	Upstream Diameters	Downstream Diameters
Common Emission Inlet Duct at Entrance to Gas Cooler[a]	0.5	1.1
Dedicated Baghouse Inlet from Foundry Sand Separator	>0.5	>2.0
Northwest Baghouse Stack	1.5	2.4
Rotary Dryer – Secondary Hood	>0.5	>2.0

a. Test ports at the inlet to the gas cooler were previously evaluated for cyclonic flow and were determined to be acceptable for sampling. This evaluation was performed as part of the successful compliance demonstration test of the Lead Recovery Rotary Furnace in October 2014.

Baghouse operating data that can be collected during the tests is limited to differential pressure which will be manually recorded in five minute increments during sampling periods. Baghouse temperature will be collected by test Method 29.

Table 2.2-3 presents a summary of the anticipated operating conditions for the emission units contributing to Northwest baghouse inlet emissions.

Table 2.2-3 Summary of Emission Unit Operating Conditions

Parameter	Units	Doghouse	Babbit Pot	Foundry Sand Separator	Rotary Dryer Sec. Exhaust
Approx. Batch Time	hrs	< 1	12	Continuous operation	Continuous operation
Material (lead) Charge	lbs		6,000 to 10,000		
Maximum Process Rate	tph	0.65	0.75	0.75	1.06
Average Process Rate	tph	0.50	0.50	0.50	1.00
Molten Metal Temperature	°F	NA	780	NA	NA

The following sections describe the contributing emission units for the Northwest Baghouse inlet and outlet PM and metal testing.

2.2.1 Doghouse

The Doghouse consists of a metal enclosure equipped with front opening doors. An exhaust duct connects the top of the enclosure to an inlet manifold leading to the Northwest baghouse.

A forklift is used to move the metal baskets of treated material from the TPU to a mechanical device located inside the doghouse enclosure. The mechanical device slowly rotates the basket to remove ash. The ash falls to the floor and is manually collected for recycling.

The fan of the Northwest baghouse maintains a negative pressure within the doghouse when processing materials. Ambient air from the room is drawn through louvers located in the side walls of the enclosure and carries entrained dust from the doghouse to the Northwest baghouse.

The following process operating parameters will be manually reported during testing.

- Types of material processed
- Time doors open and close
- Duration of processing.
- Exhaust duct damper position.

There are no other parametric monitors associated the Doghouse.

2.2.2 Babbit Pot

The Babbit Pot is a static batch melting pot used to melt Babbit. Babbit is a material used to line the housings of industrial bearings and consists primarily of tin, lead, and antimony. The lead content of Babbit can vary from 0% up to 25%. Approximately 70% of the Babbit produced on an annual basis contains just 0.35% lead by weight. Approximately 20% of the Babbit produced on an annual basis contains 25% lead. The Babbit Pot can process material at a rate of 0.75-tpy. A typical batch cycle lasts from four to ten hours depending on the amount of material processed and the product being produced.

Scrap material is manually loaded into the pot. The pot is indirectly heated by a natural gas burner located beneath the pot. As the Babbit scrap melts, contaminants (dross) rises to the surface and are periodically removed by manually ladling the material from the pot to a dross drum located immediately adjacent to the pot. Samples of the molten metal are periodically collected and analyzed to determine the concentration of target metals. The molten metal is adjusted by adding metal alloys as required to meet the final specifications for the batch.

At the end of each batch, molten metal product is manually ladled from the pot into ingot molds that are located on a portable table positioned adjacent to the enclosure. Because of the ingots are filled manually, emissions from filling the ingot molds are negligible.

The Babbit pot is fitted with a cylindrical enclosure with a sliding door to allow access to the pot. In the closed position there is an approximately 1-foot gap between the pot enclosure and the bottom of the door to allow air to enter the enclosure. The enclosure has a solid top that is connected to an inlet manifold leading to the Northwest baghouse. The baghouse fan creates and negative pressure in the enclosure that draws ambient air from the room into the enclosure to carry entrained emissions to the baghouse.

The Babbit pot dross drum is located beneath a dedicated exhaust hood adjacent to the furnace enclosure that is also connected to the inlet manifold of the Northwest Baghouse.

The following process operating parameters will be manually reported during testing. Temperatures will be recorded at 15-minute intervals.

- Types of raw material charged
- Amount of raw material charged
- Charge times and material addition times
- Drossing times
- Molten metal temperature
- Exhaust duct damper position

There are no other parametric monitors associated the Babbit Pot.

2.2.3 Foundry Sand Separator

The separator is a mechanical shaker equipped with a series of mechanical screens. The unit recovers metals from foundry sand received from area foundries that contains brass and aluminum. The metal recovered is sold for recycling and the foundry sand is disposed of off-site at a licensed land disposal facility.

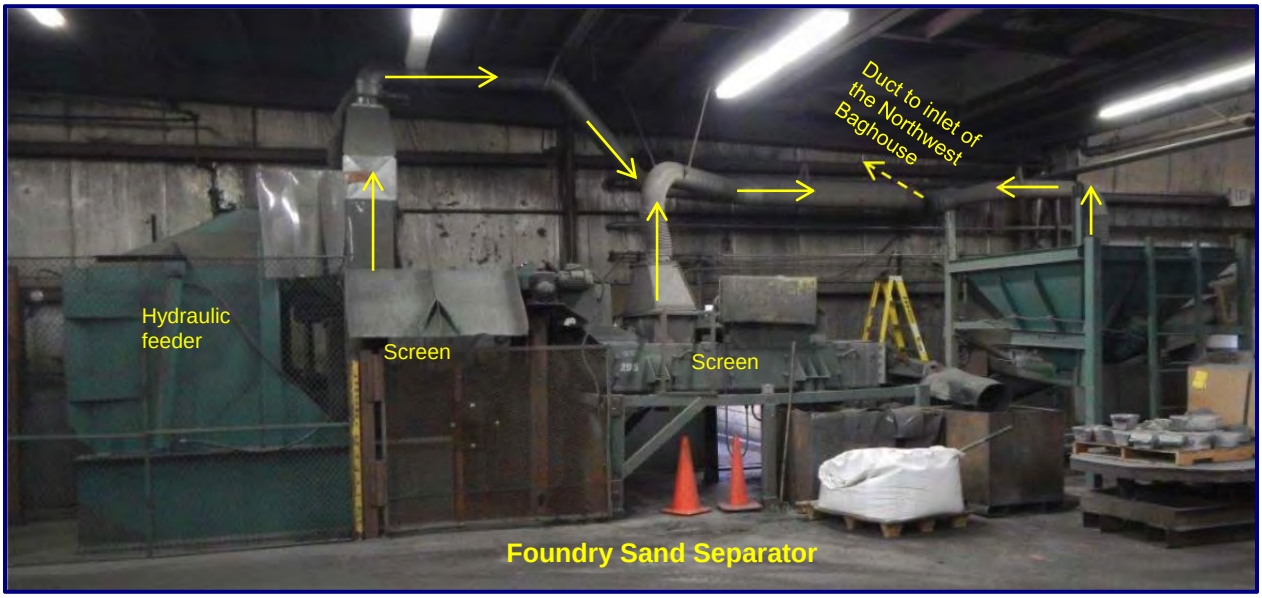

The screens are enclosed within exhaust hoods that are connected to an inlet manifold leading to the Northwest baghouse. The baghouse fan maintains a negative pressure in the enclosures that draws ambient air from the room into the enclosures and carries particulate emissions to the baghouse. The material processed by this unit may contain negligible amounts of lead present as an alloy in the recovered metal.

The following process operating parameters will be manually reported during testing.

- Types of raw material processed
- Raw material characteristics
- Raw material feed rates
- Exhaust duct damper position

There are no other parametric monitors associated the Foundry Sand Separator.

2.2.4 Rotary Dryer – Secondary Exhaust Hood

The rotary dryer processes up to 1.06-tons per hour of scrap metal cuttings and turnings to evaporate liquid lubricants that aid the metal working process. Metal cuttings are fed to a rotary drum dryer heated by a natural gas burner. The metal feed system allow for collection of free liquids for offsite disposal. Air moves through the drum counter-current to the direction of solids. The dryer produces dry cuttings and turnings for recycling. Treated metal is discharge from a hinged flapper door at the bottom of the drum. The door is weighted to remain closed when no material is being discharged.

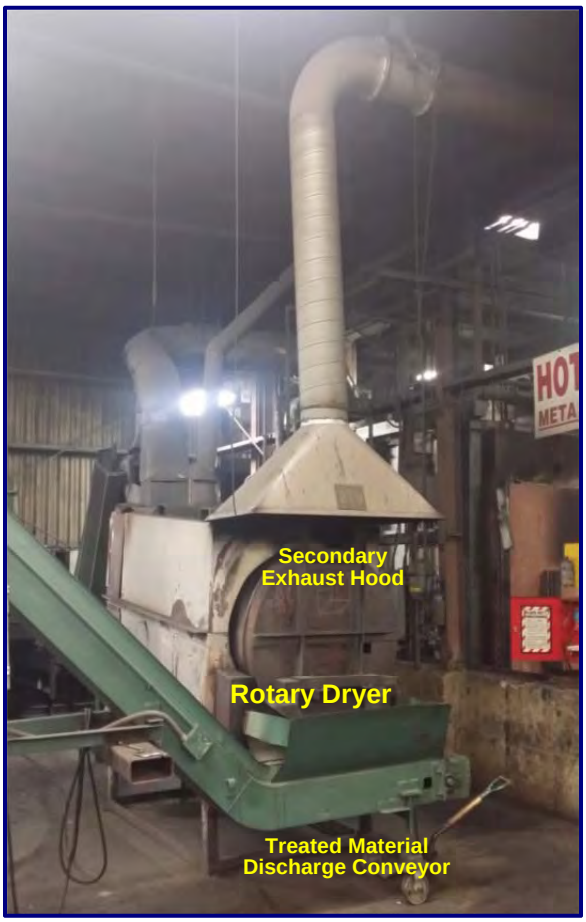

Ambient air enters the metal discharge end of the dryer and flows toward the metal inlet end of the dryer. As the air passes through the dryer, VOC and moisture from cutting fluids are swept from the dryer, collected by the primary exhaust hood and ducted to the inlet of the TPU secondary combustion chamber.

A secondary exhaust hood is located over the metal discharge end of the dryer and is connected to an inlet duct of the Northwest baghouse.

The following process operating parameters will be manually reported during testing.

- Raw material feed rate
- Processed material production rates
- Drum temperature
- Exhaust duct damper position

There are no other parametric monitors associated with the rotary dryer.

2.3 Rotary Dryer Primary Exhaust Controlled by the TPU Control System

Emission units controlled by the TPU Baghouse include the following.

<table>
<tr><th>Emission Units Controlled by the TPU Baghouse</th><th colspan="3">Inlet to TPU Baghouse</th></tr>
<tr><td>TPU 1[a]</td><td rowspan="2">Shared dedicated inlet secondary combustion chamber</td><td rowspan="3">Combined discharge from the secondary combustion chamber is ducted to a evaporative quench</td><td rowspan="3">Evaporative quench discharges to the TPU baghouse</td></tr>
<tr><td>TPU 2[a]</td></tr>
<tr><td>Rotary Dryer – Primary Exhaust Hood</td><td>Dedicated inlet to secondary combustion chamber</td></tr>
</table>

a. Testing of TPU operation is not required for this testing program.

Thermal Reduction Unit PM and lead emissions were measured during a test performed in October 2014. The test report was submitted to USEPA for review. Based upon USEPA's review of the test report, the requirement to measure PM and metals emissions from the Thermal Reduction Unit (Units 1 and 2) was eliminated.

As depicted in Figure 5, the exhaust gases from the TPUs and the rotary dryer primary exhaust hood enter the secondary combustion chamber at a common location. Exhaust from the secondary combustion chamber is routed to an evaporative quench to cool the gases to approximately 400°F. The cool gases are ducted to the inlet of the TPU baghouse. The TPU baghouse stack is 33-inches in diameter and is equipped with test ports.

Even when the TPUs are not operating, Rotary Dryer exhaust samples collected at the outlet of the TPU baghouse will likely contain some amount of lead because of the lead-containing TPU dust in the baghouse and impregnated in the baghouse filter fabric. Rotary Dryer emission samples collected at the TPU stack, even when the TPUs are not operating, will not be representative of Rotary Dryer emissions. To address this issue, uncontrolled Rotary Dryer exhaust gases will be sampled in the discharge duct from the primary exhaust hood upstream of the thermal oxidizer. Controlled emissions will be estimated by applying previously measured baghouse PM and lead emission removal efficiencies to the uncontrolled dryer PM and metals emission rates.

Total emissions at the inlet and outlet of the TPU baghouse will be the sum of the previously measured TPU emissions and the dryer emissions identified by this testing event.

Based on the above, PM and metals sampling will be performed only in the exhaust duct from the primary hood on the Rotary Dryer. Method 9 opacity testing will be conducted at the TPU baghouse stack during the dyer sampling.

Operation of the TPUs during the Rotary Dryer testing will be at the facility's option based on workload. If the TPUs are operated during the Rotary Dryer testing, process operating data for the TPUs will be recorded and included in the test report.

Because PM and metals testing will not be performed in the baghouse stack, operation of the TPUs will have no impact on testing of the dryer primary hood exhausts. Therefore, operation of the TPUs during the dryer testing will be at Behr's option based on facility work load. Regardless of TPU operating status, opacity testing at the baghouse stack will be performed during the dryer exhaust duct testing. If TPUs are operated during testing of the Rotary Dryer primary exhaust, operating data will be recorded and included in the test report.

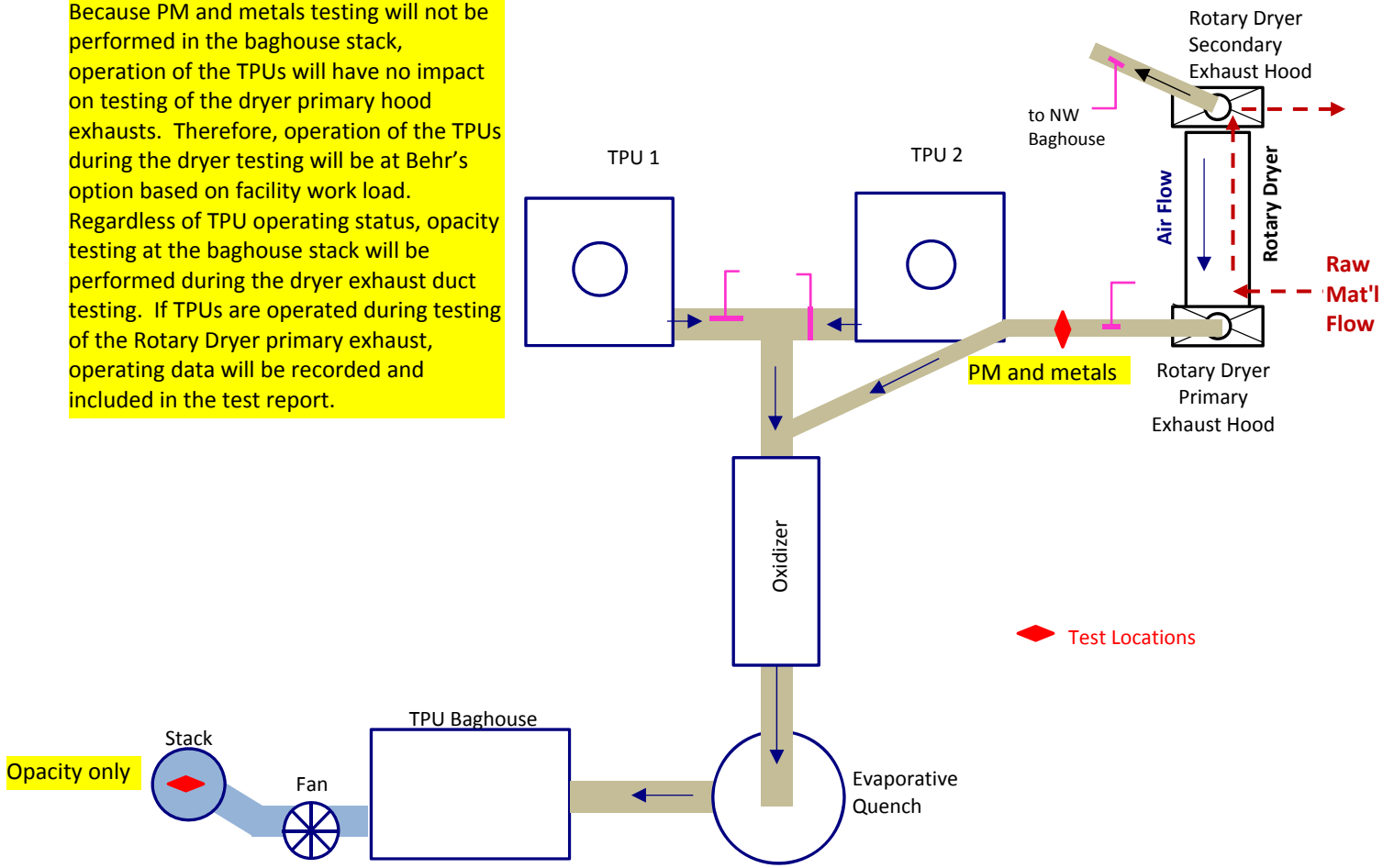

RK & Associates, Inc. 2S631 ROUTE 59, SUITE B WARRENVILLE, IL 60555 630-393-9000	COMMENTS: Particulate and Metals Emissions Testing Protocol		PM and Metals Test Locations for Rotary Dryer Primary Exhaust		FIGURE 5
	DRAWN BY::	APPROVED BY:: JGP	PROJECT NUMBER R11379	DATE DRAWN: 08-2015	REVISED DATE

Table 2.3-1 presents a summary of the anticipated exhaust gas flow conditions in the Rotary Dryer primary exhaust hood duct and at the baghouse stack (opacity testing only).

Table 2.3-1– TPU Baghouse Emission Sampling Locations

Parameter	Units	Dryer Primary Exhaust Hood Duct	TPU Baghouse Stack (Outlet)
Duct Diameter	ft	1.33	1.50
Exhaust Gas Flow Rate	acfm	2,200	4,700
Exhaust Gas Velocity	ft/sec	15	33
Exhaust Gas Temperature	°F	225	304
Moisture Content	% Vol	25%	22.6%
Test Methods		Methods 1 -4 for flow rate and moisture and Method 29 for PM and metals	M9 Opacity

The 2.3-2 summarizes the location of the test ports that will be used for sampling.

Table 2.3-2– TPU Baghouse Test Port Location Information

Test Location	Upstream Diameters	Downstream Diameters
Dryer Primary Hood Exhaust Duct	>0.5	>2.0

Baghouse operating data that can be collected during the tests is limited to differential pressure which will be manually recorded in five minute increments during sampling periods.

Table 2.2-3 presents a summary of the anticipated operating conditions for the Rotary Dryer.

Table 2.3-3 Summary of Emission Unit Operating Conditions

Parameter	Units	Rotary Dryer
Approx. Batch Time	hrs	Continuous operation
Maximum Processing Rate	tph	1.06
Average Process Rate	tph	1.00
Exhaust gas temperature	°F	225°F

2.3.1 Rotary Dryer – Primary Exhaust Hood

The rotary dryer processes up to 1.06-tons per hour of scrap metal cuttings and turnings to evaporate liquid lubricants that aid the metal working process. Metal cuttings are fed to a rotary drum dryer heated by a natural gas burner. The metal feed system allow for collection of free liquids for offsite disposal. Air moves through the drum counter-current to the direction of solids. The dryer produces dry cuttings and turnings for recycling. Treated metal is discharge from a hinged flapper door at the bottom of the drum. The door is weighted to remain closed when no material is being discharged.

Ambient air enters the metal discharge end of the dryer and flows toward the metal inlet end of the dryer. As the air passes through the dryer, VOC and moisture from cutting fluids are swept from the dryer, collected by the primary exhaust hood and ducted to the inlet of the TPU secondary combustion chamber.

The Rotary Dryer is not a lead emission source and PM emissions in the primary exhaust hood duct are anticipated to be negligible. The liquid lubricants saturating the feed material and the density of the metal feed material limits the ability of any fines to become entrained in the dryer exhaust gases and carried upward into the secondary exhaust hood.

The following process operating parameters will be manually reported during testing.

- Raw material feed rate
- Processed material production rates
- Drum temperature
- Exhaust duct damper position

There are no other parametric monitors associated with this unit.

3.0 SPECIFIC TEST PROCEDURES

The following test procedures will be performed at each test location

3.1 Method 1 – Sample and Velocity Determination

Sampling traverse points will be determined based on the ratio of the stack diameter to the upstream and downstream distances of the sampling plane to the closest disturbances. The minimum number of traverse points on the sampling plane will be determined from Figure 1-2 and Table 1-2 of 40 CFR 60, Appendix A, Reference Method 1.

3.2 Method 2 – Volumetric Flow Rate Determination

The average velocity of the stream will be determined from differential pressure readings at each traverse point using a Type-S pitot tube and inclined manometer and the gas temperature using a calibrated thermocouple probe connected to a digital thermocouple indicator. The pitot tube will be constructed per Method 2 design specifications and a correction coefficient of 0.84 will be assigned. Volumetric flow rate will be calculated to dry, standard conditions. If Method 2A is used, a Type-P pitot tube with a coefficient of 0.99 will be used.

3.3 Method 3 – Oxygen (O_2)/Carbon Dioxide (CO_2) Determination

Method 3A will be performed to determine the percent (%) level concentration of oxygen (O2) in the stack gas. Concentrations will be recorded once per minute using a data acquisition system and averaged. Prior to testing a calibration error check will be performed using low, mid, and high-range EPA Protocol calibration gases. Sampling system bias, and calibration drift tests will be performed as appropriate after the sample runs to check the drift of the analyzers and bias-correct the data.

3.4 Method 4 - Determination of Moisture Content

Method 4 will be performed during test runs to measure the moisture content of the stack gas. The moisture values will be used to calculate volumetric flow rate and molecular weight on a dry basis. The impingers for each Method 4 sample train will be weighed before and after each run.

3.5 Method 29 – Determination of Particulate and Metals

EPA Method 29 will be used to determine particulate matter (PM) and trace metals emissions. A stack sample is withdrawn isokinetically from the source, particulate emissions are collected in the probe and on a heated quartz filter, and gaseous emissions are collected in an aqueous acidic solution of hydrogen peroxide and an aqueous acidic solution of potassium permanganate (if Hg analysis is required). The recovered samples are digested, and appropriate fractions are analyzed by inductively coupled plasma emission spectroscopy (ICP) or atomic absorption spectroscopy (AAS). Three 2-hour sample runs will be performed for each applicable source.

The sample train, and depicted in Figure 6, consists of a glass nozzle attached to a glass-lined probe. Exiting the probe the gas passes through a glass filter assembly, which contains a Teflon® filter support, a silicon gasket, and a pre-tared quartz fiber filter for particulate matter (PM) collection. The filter assembly is enclosed in a temperature controlled sample box. Exiting the filter holder, the gas passes through connective glassware to the condenser section of the sample train. This portion of the sample train includes a series of impingers. The first and second impingers, each contain 100 mL of a solution of 5% nitric acid (HNO_3) and 10% hydrogen peroxide (H_2O_2); the third impinger is empty; the fourth and fifth impingers, if mercury is to be analyzed, contains a solution of 4% potassium permanganate ($KMnO_4$) and 10% sulfuric acid (H_2SO_4), and the final impinge contains indicating silica gel. All components of the sample train are cleaned thoroughly with nitric acid solution prior to assembly, per Method 29.

After sampling, the probe liner is rinsed with acetone to recover particulate matter (PM) and 0.1 N HNO_3. The acetone probe rinse is transferred to a tared container, and both the probe rinse residue and filter are analyzed gravimetrically for PM. After weighing to determine PM, the probe rinse residue and filter are processed using an acid solution for metals analysis. If mercury is a target analyte, all portions of the sample train are analyzed using cold vapor atomic absorption spectroscopy (CVAA). Other metals are quantified using Inductively Coupled Argon Plasma (ICAP) spectroscopy or atomic absorption spectroscopy (AAS). Blank filter and reagent samples are analyzed to determine native presence of analytes.

The Request for Additional Information specifically excludes mercury from the required metals analyses. Therefore, this protocol proposes to determine PM emissions from the Method 29 sampling train in accordance with the requirements in sections 8.2.6, 8.3.1.1, and 8.3.2 of the method.

At sampling locations that do not have horizontal test ports, unheated flexible Teflon tubing will be used between the outlet of the filter box and in inlet of the impingers. In accordance with section 8.2.8 of Method 29, first three impingers, filter support, back half of the filter housing and connection glassware (which in this case includes the Teflon tubing used between the filter box and the impingers) will be rinsed with 100 ml of 0.1 N HNO3 using the procedure as applicable in Method 12 section 8.7.3.

3.6 Method 29 Audit Samples

In accordance with the requirements of the Stationary Source Audit Sample (SSAS) Program, two audit samples, one filter sample and one liquid sample, will be obtained from ERA in Golden, Colorado. ERA will send the a description of the recommended audit samples to USEPA Region V for approval. Upon approval, the samples will be sent directly to the laboratory that will conduct the analysis of field samples collected during the test program described in this document.

The laboratory will handle, store and analyze each audit sample in the same batch and in the same manner as the stationary source test samples for the test method and analytes being audited. Audit samples will

be prepared for analysis in accordance with the procedures specified by ERA. The laboratory shall use the same personnel, sample tracking, sample storage, preparation, analysis's methods, equipment, materials, standard operating procedures, calibration techniques, quality control procedures, and quality control acceptance criteria for the stationary source test samples and the audit samples.

The laboratory will report audit sample results to ERA and simultaneous report the stationary source test laboratory results and the audit sample results to the USEPA.

The laboratory will keep records regarding the analysis of audit samples and make them available for review upon request for a minimum of five years.

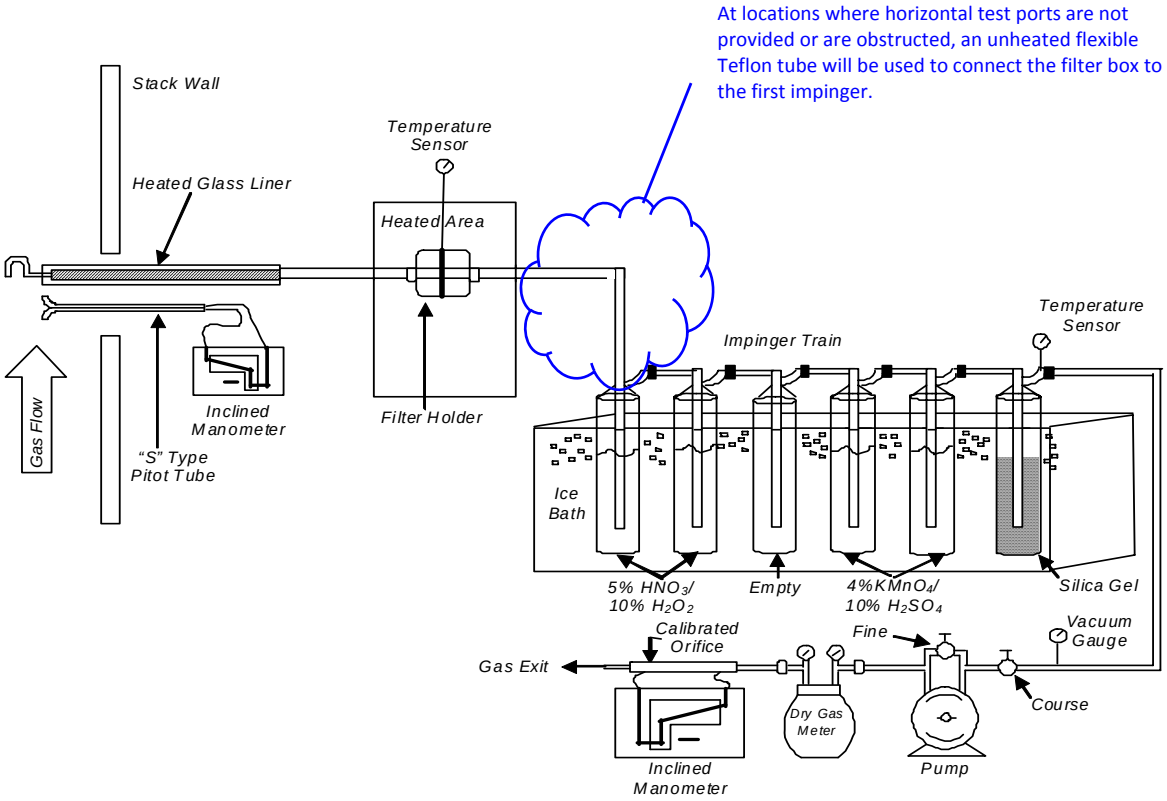

Figure 6. USEPA Method 29 Sampling Train

This Page Left Blank

4.0 PROJECT PERSONNEL

The selected testing contractor will provide the necessary personnel to collect samples. A maximum of three sampling trains will be operated simultaneously. The testing contractor will provide a Project Manager, four test engineers and four test technicians.

This Page Left Blank

5.0 TEST SCHEDULE

The schedule will include one day for mobilize to the facility and 3 days to perform the required testing.

The testing schedule will be dependent upon availability of audit samples, contractor availability, and the time required for the facility to stockpile sufficient quantities of materials to allow operation of emission units at maximum throughput rates during sample collection.

The required pre-test notifications will be sent to USEPA as required.

Table 5.0-1 present a proposed testing schedule.

Table 5.0-1 – Proposed Test Schedule

Emission Point	Pollutants	Day 1	Day 2
Blue Baghouse			
Lead Pot 2 Exhaust	PM / Metals	X	
Lead Pot 3/Dross Drum Exhaust	PM / Metals	X	
Sweeco Exhaust Duct	PM / Metals	X	
Blue Baghouse Outlet (Stack)	PM / Metals Opacity	X	
TPU Baghouse (if required)			
Rotary Dryer Primary Exhaust Duct	PM / Metals	X	
TPU Baghouse Outlet (Stack)	Opacity	X	
Northwest Baghouse			
Gas Cooler Inlet Exhaust	PM / Metals		X
Foundry Sand Separator Exhaust	PM / Metals		X
Northwest Baghouse Outlet (Stack)	PM / Metals Opacity		X

Based on conversations with the testing subcontractor, the earliest date when sufficient equipment and manpower is available for the above testing program is the week of September 21, 2015.

This Page Left Blank

6.0 QUALITY ASSURANCE PROCEDURES

The testing contractor recognizes the previously described reference methods to be very technique oriented and attempts to minimize all factors that can increase error by implementing its Quality Assurance Program into every segment of its testing activities.

Copies of all pertinent calibration data (calibration gas certifications, Pitot tubes, dry gas meters, nozzles, etc.) will be given to the on-site observer from the observing agency prior to testing and included in the final test report.

Calculations are performed by computer. An explanation of the nomenclature and calculations along with the complete test results will be appended in the final report. Also to be appended, are the calibration data and copies of the raw field data sheets. Analyzer interference data is kept on file.

All the data necessary for the agency to reproduce the reported results will be included in the final test report. The data shall include, but not be limited to DAS printouts, calibration data, uncorrected run averages, raw lab analysis (including chromatograms, spectra or other instrument output, and calibration and QA/QC data) with summary tables, and raw field data.

Dry gas meters are calibrated according to methods described in the Code of Federal Regulations. The dry test meters measure the test sample volumes to within 2 percent at the flowrate and conditions encountered during sampling.

This Page Left Blank

7.0 TEST REPORT

Within 30 days after completion of testing, a test report shall be submitted that will, at a minimum, include the following information.

i. Summary of Results
   a. Emission test results
   b. Process and control equipment data
   c. Discussion of test errors;
   d. Discussion of any test deviations
   e. Production data

ii. Facility Operations
   a. Description of process and control equipment operations
   b. Operating parameters of the baghouse and other control equipment
   c. Operating data to document maximum operating rates

iii. Sampling and Analytical Procedures
   a. Sampling port location
   b. Sampling point description
   c. Description of sampling procedures include equipment diagrams
   d. Description of sampling procedures that deviated from any standard method
   e. Description of analytical procedures, including calibrations
   f. Description of analytical procedures that deviated from any standard method
   g. Quality control/quality assurance procedures, tests, and results

iv. Appendixes
   a. Complete test results with calculations
   b. Raw field data
   c. Laboratory reports with signed chain of custody forms
   d. Calibration procedures and results
   e. Raw process and control equipment data signed by plant representative
   f. Test log
   g. Project participants
   h. Related correspondence

This Page Left Blank

RK & Associates, Inc.

Emission Test Report
Particulate and Metals Emissions

Behr Iron & Metal - Rockford, Illinois
Site ID No.: P201030AB

January 19, 2016

APPENDIX B

PARTICULATE MATTER AND TRACE METAL EMISSIONS TEST REPORT BLUE BAGHOUSE

Mostardi Plat Environmental Services

This Page Left Blank

mostardi platt

Particulate Matter and Trace Metal Emissions Test Report

For: RK & Associates, Inc.
At: Behr Iron & Metal
Rockford Facility
Blue Baghouse System
Rockford, Illinois
Report No. M154005B
October 7, 2015

Particulate Matter and Trace Metal Emissions Test Report

For: RK & Associates, Inc.
At: Behr Iron & Metal
Rockford Facility
Blue Baghouse System
Rockford, Illinois
October 7, 2015

Report Submittal Date
January 19, 2016

© Copyright 2016
All rights reserved in
Mostardi Platt

Report No. M154005B

888 Industrial Drive
Elmhurst, Illinois 60126
630-993-2100

TABLE OF CONTENTS

1.0 EXECUTIVE SUMMARY 1

2.0 TEST METHODOLOGY 3
- Method 1 Traverse Point Determination 3
- Method 2 Volumetric Flowrate Determination 4
- Method 3A/3 Oxygen (O_2)/Carbon Dioxide (CO_2) Determination 4
- Method 5 Filterable Particulate Matter Determination 4
- Method 29 Trace Metals Determination 4
- Method 9 Visual Emission Determination 5

3.0 TEST RESULT SUMMARIES 6

4.0 CERTIFICATION 18

APPENDICES
- Appendix A - Test Section Diagram 20
- Appendix B - Sample Train Diagrams 24
- Appendix C - Calculation Nomenclature and Formulas 29
- Appendix D- Laboratory Sample Analysis 42
- Appendix E - Reference Method Test Data (Computerized Sheets) 79
- Appendix F - Field Data Sheets 102
- Appendix G - Calibration Data 139
- Appendix H- Gas Cylinder Certifications 166
- Appendix I – Visible Emissions Data and Reader Certification 169

1.0 EXECUTIVE SUMMARY

MOSTARDI PLATT conducted a particulate matter and trace metals emissions test program for Behr Iron & Metal at their Rockford facility on the Blue Baghouse system in Rockford, Illinois on October 7, 2015. This report summarizes the results of the test program and test methods used.

The test locations, test date, and test parameters are summarized below.

TEST INFORMATION		
Test Locations	**Test Date**	**Test Parameters**
Sweeco Separator	October 7, 2015	Filterable Particulate Matter (FPM), Antimony (Sb), Arsenic (As), Barium (Ba), Beryllium (Be), Cadmium (Cd), Chromium (Cr), Cobalt (Co), Copper (Cu), Lead (Pb), Manganese (Mn), Nickel (Ni), Selenium (Se), Silver (Ag), and Zinc (Zn)
Blue Baghouse Lead Pot 2/Lead Pot Dross Drum/Lead Pot 3 (After Cyclone)		FPM, Sb, As, Ba, Be, Cd, Cr, Co, Cu, Pb, Mn, Ni, Se, Ag, and Zn
Blue Baghouse Outlet		FPM, Sb, As, Ba, Be, Cd, Cr, Co, Cu, Pb, Mn, Ni, Se, Ag, Zn, and Opacity

The purpose of the test program was to determine FPM and metals emissions of the Blue Baghouse. Selected results of the test program are summarized below. A complete summary of emission test results follows the narrative portion of this report.

Run 1 was not included in the averages below due to a sampling issue at the Blue Baghouse Outlet test location. All average emission rate are based on runs 2 through 4.

TEST RESULTS SUMMARY		
Test Location	**Test Parameter**	**Emission Rate, lb/hr**
Sweeco Separator	FPM	1.194
	Sb	< 0.000079
	As	< 0.000029
	Ba	< 0.0003
	Be	< 0.000008
	Cd	< 0.000009
	Cr	0.000156
	Co	0.0001
	Cu	0.0241
	Pb	0.0061
	Mn	0.0007
	Ni	0.0006
	Se	< 0.0001
	Ag	< 0.0001
	Zn	0.0089

TEST RESULTS SUMMARY		
Test Location	**Test Parameter**	**Emission Rate, lb/hr**
Blue Baghouse Lead Pot 2/Lead Pot Dross Drum/Lead Pot 3 (After Cyclone)	FPM	0.046
	Sb	0.000635
	As	0.000106
	Ba	< 0.0003
	Be	< 0.000008
	Cd	< 0.000024
	Cr	0.000455
	Co	0.00003
	Cu	0.0018
	Pb	0.0193
	Mn	< 0.0001
	Ni	0.0003
	Se	< 0.0001
	Ag	<0.00002
	Zn	0.0011

Test Location	**Test Parameter**	**Emission Rate, lb/hr**
Blue Baghouse Outlet	FPM	0.192
	Sb	< 0.000050
	As	< 0.000034
	Ba	< 0.0002
	Be	< 0.000008
	Cd	< 0.000033
	Cr	0.000183
	Co	0.0001
	Cu	0.0044
	Pb	0.0015
	Mn	0.0003
	Ni	0.0015
	Se	< 0.0001
	Ag	< 0.00003
	Zn	< 0.0028
	Opacity	0.0%

The Stationary Source Audit Sample Program audit sample was obtained from ERA and submitted for analysis to Maxxam Analytical. The results of the audit samples were compared to the assigned value by ERA and found to be acceptable. The audit sample results and evaluation is appended to this report.

The identifications of the individuals associated with the test program are summarized below.

TEST PERSONNEL INFORMATION		
Location	**Address**	**Contact**
Test Coordinator	RK & Associates, Inc. 2S631 Route 59, Suite B Warrenville, Illinois 60555	Mr. John Pinion Associate Engineer (630) 393-9000 x 208 jpinion@rka-inc.com
Test Facility	Behr Iron & Metal 1100 Seminary Street Rockford, Illinois 61104	Mr. Ron Coupar Environmental Manager (815) 987-2770 rcoupar@behrim.com
Testing Company Representative	Mostardi Platt 888 Industrial Drive Elmhurst, Illinois 60126	Mr. Mark Peterson Project Manager (630) 993-2100 (phone) mpeterson@mp-mail.com

The test crew consisted of Messrs. B. Schuler, B. Tarra, D. Kossack, J. Howe, K. Johnson, M. Karum, M. Lipinski, M. Platt, N. Colangelo, S. Cleary and M. Peterson of Mostardi Platt.

2.0 TEST METHODOLOGY

Emission testing was conducted following the methods specified in 40CFR60, Appendix A. A schematic of the test section diagrams are found in Appendix A and schematics of the sampling trains used are included in Appendix B. Calculation nomenclature and sample calculations are included in Appendix C. Laboratory analysis data are found in Appendix D. Copies of electronic data for each test run are included in Appendix E and field data sheets are found in Appendix F.

The following methodologies were used during the test program:

Method 1 Traverse Point Determination

Test measurement points were selected in accordance with Method 1. The characteristics of the measurement location are summarized below.

TEST POINT INFORMATION					
Test Location	**Location Diameters**	**Upstream Diameters**	**Downstream Diameters**	**Test Parameters**	**Number of Sampling Points**
Sweeco Separator	16 Inches	>0.5	>2.0	FPM, Sb, As, Ba, Be, Cd, Cr, Co, Cu, Pb, Mn, Ni, Se, Ag, Zn	24
Blue Baghouse Pot 2/Lead Drum Dross/Lead Pot 3 (After Cyclone)	31.5 Inches	12.5”	62”		24
Blue Baghouse Outlet	41 Inches	>0.5	>2.0		24

Absence of cyclonic flow tests were performed prior to testing at each location and each location met the minimum criteria.

Method 2 Volumetric Flowrate Determination

Gas velocity was measured following Method 2, for purposes of calculating volumetric flow rate and particulate and trace metal emission rates on a lb/hr basis. An S-type pitot tube, differential pressure gauge, thermocouple and temperature readout were used to determine gas velocity at each sample point. All of the equipment used was calibrated in accordance with the specifications of the Method. Calibration data are presented in Appendix G.

Method 3A/3 Oxygen (O_2)/Carbon Dioxide (CO_2) Determination

Flue gas molecular weight was determined in accordance with Method 3A during the first test run. Servomex analyzers were used to determine stack gas oxygen and carbon dioxide content and, by difference, nitrogen content. All of the equipment used was calibrated in accordance with the specifications of the Method. Calibration data are presented in Appendix G and copies of the gas cylinder certifications are found in Appendix H. For all additional test runs the flue gas molecular weight was determined in accordance with Method 3. A Fyrite analyzer was used to determine stack gas oxygen and carbon dioxide content and, by difference, nitrogen content.

Method 5 Filterable Particulate Matter Determination

Flue gas filterable particulate matter concentrations and emission rates were determined in accordance with Method 5. The probe and filter housing were maintained at a temperature of 248ºF +/- 25ºF. An Environmental Supply Company, Inc. sampling train was used to sample flue gas at an isokinetic rate. Four impingers were utilized, the first two each contained 100 ml of 0.1N Nitric Peroxide (N_2O_2), the third remained empty, and the fourth contained approximately 200 grams of silica gel. The impingers were weighed prior to and after each test run in order to determine moisture content of the stack gas. A minimum of 60 dry standard cubic feet was sampled for each run.

Particulate matter in the sample probe was recovered utilizing acetone; three passes of the probe brush through the entire probe was performed, followed by a visual inspection of the acetone exiting the probe. The acetone solution exiting the probe was clear, and therefore the wash was considered complete. The nozzle was then removed from the probe and cleaned in a similar manner, utilizing an appropriately sized nozzle brush. The filter and filter housing were recovered in a clean area. The filter housing was washed a minimum of three times with acetone and inspected for cleanliness, and the filter was placed in its corresponding petri dish. The acetone wash and the filter were labeled and marked, then analyzed at the Mostardi Platt Laboratory by Mostardi Platt personnel in accordance with the Method. All sample data analysis, are found in Appendix D. All of the equipment used is calibrated in accordance with the specifications of the Method. Calibration data are presented in Appendix G.

Method 29 Trace Metals Determination

Flue gas metals concentrations and emission rates were determined in accordance with Method 29 in conjunction with Method 5 sampling. An Environmental Supply Company, Inc. sampling train was used to sample stack gas, in the manner specified in the Method. Analyses of the samples collected were conducted by Maxxam. Samples were analyzed for the following metals, using Inductively Coupled Argon Plasma emission spectroscopy (ICP): Antimony, Arsenic, Barium, Beryllium, Cadmium, Chromium, Cobalt, Copper, Lead, Manganese, Nickel, Selenium, Silver, and Zinc. All of the equipment used was calibrated in accordance with the specifications of the Method. Calibration data is presented in the Appendix G.

Method 9 Visual Emission Determination

Visible emissions were determined in accordance with Method 9. Visible emissions observations were conducted and recorded by M. Platt, who is a certified visual emissions observer. A copy of M. Platt's certification is presented in the Appendix H.

3.0 TEST RESULT SUMMARIES

Client: Rk & Associates, Inc.
Facility: Behr Iron and Metal Rockford Facility
Test Location: Sweeco Separator
Test Method: 5/29

Source Condition	Normal	Normal	Normal	Normal	
Date	10/7/15	10/7/15	10/7/15	10/7/15	
Start Time	8:20	11:35	14:20	17:00	
End Time	10:36	13:43	16:28	19:05	Runs 2 - 4
	Run 1	Run 2	Run 3	Run 4	Average
Stack Conditions					
Average Gas Temperature, °F	67.8	74.7	77.0	75.8	75.8
Flue Gas Moisture, percent by volume	1.3%	1.5%	1.4%	1.2%	1.4%
Average Flue Pressure, in. Hg	28.96	28.96	28.96	28.96	28.96
Gas Sample Volume, dscf	69.081	67.106	72.372	90.668	76.715
Average Gas Velocity, ft/sec	64.835	66.067	71.066	88.325	75.153
Gas Volumetric Flow Rate, acfm	5,431	5,535	5,953	7,399	6,296
Gas Volumetric Flow Rate, dscfm	5,188	5,210	5,587	6,971	5,923
Gas Volumetric Flow Rate, scfm	5,259	5,290	5,666	7,058	6,005
Average %CO_2 by volume, dry basis	0.0	0.0	0.0	0.0	0.0
Average %O_2 by volume, dry basis	20.9	20.9	20.9	20.9	20.9
Isokinetic Variance	99.5	96.3	96.8	97.2	96.8
Filterable Particulate Matter (Method 5)					
grams collected	0.0920	0.1250	0.1030	0.1226	0.1169
grains/acf	0.0196	0.0271	0.0206	0.0197	0.0225
grains/dscf	0.0205	0.0287	0.0220	0.0209	0.0239
lb/hr	0.914	1.283	1.052	1.247	1.194

Client: Rk & Associates, Inc.
Facility: Behr Iron and Metal Rockford Facility
Test Location: Sweeco Separator
Test Method: 5/29

Source Condition	Normal	Normal	Normal	Normal	
Date	10/7/15	10/7/15	10/7/15	10/7/15	
Start Time	8:20	11:35	14:20	17:00	
End Time	10:36	13:43	16:28	19:05	Runs 2 - 4
	Run 1	Run 2	Run 3	Run 4	Average
Stack Conditions					
Average Gas Temperature, °F	67.8	74.7	77.0	75.8	75.8
Flue Gas Moisture, percent by volume	1.3%	1.5%	1.4%	1.2%	1.4%
Average Flue Pressure, in. Hg	28.96	28.96	28.96	28.96	28.96
Gas Sample Volume, dscf	69.081	67.106	72.372	90.668	76.715
Average Gas Velocity, ft/sec	64.835	66.067	71.066	88.325	75.153
Gas Volumetric Flow Rate, acfm	5,431	5,535	5,953	7,399	6,296
Gas Volumetric Flow Rate, dscfm	5,188	5,210	5,587	6,971	5,923
Gas Volumetric Flow Rate, scfm	5,259	5,290	5,666	7,058	6,005
Average %CO_2 by volume, dry basis	0.0	0.0	0.0	0.0	0.0
Average %O_2 by volume, dry basis	20.9	20.9	20.9	20.9	20.9
Isokinetic Variance	99.5	96.3	96.8	97.2	96.8
Antimony (Sb) Emissions					
ug of sample collected	7.11	≤ 8.30	≤ 6.70	≤ 8.20	≤ 7.73
ppb	0.72	≤ 0.86	≤ 0.65	≤ 0.63	≤ 0.71
ug/dscm	3.63	≤ 4.37	≤ 3.27	≤ 3.19	≤ 3.61
lb/hr	0.000071	≤ 0.000085	≤ 0.000068	≤ 0.000083	≤ 0.000079
Arsenic (As) Emissions					
ug of sample collected	≤ 2.20	≤ 2.20	≤ 2.20	≤ 4.20	≤ 2.87
ppb	≤ 0.36	≤ 0.37	≤ 0.34	≤ 0.53	≤ 0.41
ug/dscm	≤ 1.12	≤ 1.16	≤ 1.07	≤ 1.64	≤ 1.29
lb/hr	≤ 0.000022	≤ 0.000023	≤ 0.000022	≤ 0.000043	≤ 0.000029
Beryllium (Be) Emissions					
ug of sample collected	≤ 0.55	≤ 0.55	≤ 0.55	≤ 1.05	≤ 0.72
ppb	≤ 0.75	≤ 0.77	≤ 0.72	≤ 1.09	≤ 0.86
ug/dscm	≤ 0.28	≤ 0.29	≤ 0.27	≤ 0.41	≤ 0.32
lb/hr	≤ 0.000005	≤ 0.000006	≤ 0.000006	≤ 0.000011	≤ 0.000008
Cadmium (Cd) Emissions					
ug of sample collected	3.28	0.67	≤ 0.78	≤ 1.20	≤ 0.88
ppb	0.36	0.08	≤ 0.08	≤ 0.10	≤ 0.09
ug/dscm	1.67	0.35	≤ 0.38	≤ 0.47	≤ 0.40
lb/hr	0.000033	0.000007	≤ 0.000008	≤ 0.000012	≤ 0.000009
Chromium (Cr) Emissions					
ug of sample collected	17.48	12.99	16.06	16.75	15.27
ppb	4.13	3.16	3.62	3.02	3.27
ug/dscm	8.94	6.84	7.84	6.52	7.07
lb/hr	0.000174	0.000133	0.000164	0.000170	0.000156

Client: Rk & Associates, Inc.
Facility: Behr Iron and Metal Rockford Facility
Test Location: Sweeco Separator
Test Method: 5/29

Source Condition	Normal	Normal	Normal	Normal	
Date	10/7/15	10/7/15	10/7/15	10/7/15	
Start Time	8:20	11:35	14:20	17:00	
End Time	10:36	13:43	16:28	19:05	Runs 2 - 4
	Run 1	Run 2	Run 3	Run 4	Average
Stack Conditions					
Average Gas Temperature, °F	67.8	74.7	77.0	75.8	75.8
Flue Gas Moisture, percent by volume	1.3%	1.5%	1.4%	1.2%	1.4%
Average Flue Pressure, in. Hg	28.96	28.96	28.96	28.96	28.96
Gas Sample Volume, dscf	69.081	67.106	72.372	90.668	76.715
Average Gas Velocity, ft/sec	64.835	66.067	71.066	88.325	75.153
Gas Volumetric Flow Rate, acfm	5,431	5,535	5,953	7,399	6,296
Gas Volumetric Flow Rate, dscfm	5,188	5,210	5,587	6,971	5,923
Gas Volumetric Flow Rate, scfm	5,259	5,290	5,666	7,058	6,005
Average %CO_2 by volume, dry basis	0.0	0.0	0.0	0.0	0.0
Average %O_2 by volume, dry basis	20.9	20.9	20.9	20.9	20.9
Isokinetic Variance	99.5	96.3	96.8	97.2	96.8
Cobalt (Co) Emissions					
ug of sample collected	5.16	7.52	6.91	6.71	7.05
ppb	1.08	1.61	1.38	1.07	1.35
ug/dscm	2.64	3.96	3.37	2.61	3.31
lb/hr	0.0001	0.0001	0.0001	0.0001	0.0001
Copper (Cu) Emissions					
ug of sample collected	614.00	2529.70	2346.00	2198.10	2357.93
ppb	118.71	503.48	432.95	323.79	420.07
ug/dscm	313.88	1331.27	1144.76	856.15	1110.73
lb/hr	0.0061	0.0260	0.0240	0.0224	0.0241
Lead (Pb) Emissions					
ug of sample collected	338.91	612.68	542.46	626.97	594.04
ppb	20.10	37.40	30.71	28.33	32.15
ug/dscm	173.25	322.43	264.70	244.20	277.11
lb/hr	0.0034	0.0063	0.0055	0.0064	0.0061
Manganese (Mn) Emissions					
ug of sample collected	30.53	51.50	81.17	68.88	67.18
ppb	6.83	11.86	17.33	11.74	13.64
ug/dscm	15.61	27.10	39.61	26.83	31.18
lb/hr	0.0003	0.0005	0.0008	0.0007	0.0007
Nickel (Ni) Emissions					
ug of sample collected	64.81	46.45	64.72	53.33	54.83
ppb	13.56	10.01	12.93	8.50	10.48
ug/dscm	33.13	24.44	31.58	20.77	25.60
lb/hr	0.0006	0.0005	0.0007	0.0005	0.0006

Client: Rk & Associates, Inc.
Facility: Behr Iron and Metal Rockford Facility
Test Location: Sweeco Separator
Test Method: 5/29

Source Condition	Normal	Normal	Normal	Normal	
Date	10/7/15	10/7/15	10/7/15	10/7/15	
Start Time	8:20	11:35	14:20	17:00	
End Time	10:36	13:43	16:28	19:05	Runs 2 - 4
	Run 1	Run 2	Run 3	Run 4	Average
Stack Conditions					
Average Gas Temperature, °F	67.8	74.7	77.0	75.8	75.8
Flue Gas Moisture, percent by volume	1.3%	1.5%	1.4%	1.2%	1.4%
Average Flue Pressure, in. Hg	28.96	28.96	28.96	28.96	28.96
Gas Sample Volume, dscf	69.081	67.106	72.372	90.668	76.715
Average Gas Velocity, ft/sec	64.835	66.067	71.066	88.325	75.153
Gas Volumetric Flow Rate, acfm	5,431	5,535	5,953	7,399	6,296
Gas Volumetric Flow Rate, dscfm	5,188	5,210	5,587	6,971	5,923
Gas Volumetric Flow Rate, scfm	5,259	5,290	5,666	7,058	6,005
Average %CO_2 by volume, dry basis	0.0	0.0	0.0	0.0	0.0
Average %O_2 by volume, dry basis	20.9	20.9	20.9	20.9	20.9
Isokinetic Variance	99.5	96.3	96.8	97.2	96.8
Selenium (Se) Emissions					
ug of sample collected	≤ 5.50	≤ 5.50	≤ 5.50	≤ 10.50	≤ 7.17
ppb	≤ 0.86	≤ 0.88	≤ 0.82	≤ 1.25	≤ 0.98
ug/dscm	≤ 2.81	≤ 2.89	≤ 2.68	≤ 4.09	≤ 3.22
lb/hr	≤ 0.0001	≤ 0.0001	≤ 0.0001	≤ 0.0001	≤ 0.0001
Silver (Ag) Emissions					
ug of sample collected	≤ 1.24	2.01	4.26	≤ 7.30	≤ 4.52
ppb	≤ 0.14	0.24	0.46	≤ 0.63	≤ 0.44
ug/dscm	≤ 0.63	1.06	2.08	≤ 2.84	≤ 1.99
lb/hr	≤ 0.00001	0.00002	0.00004	≤ 0.0001	≤ 0.0001
Zinc (Zn) Emissions					
ug of sample collected	541.90	924.40	800.40	896.60	873.80
ppb	101.85	178.86	143.60	128.40	150.29
ug/dscm	277.02	486.47	390.56	349.22	408.75
lb/hr	0.0054	0.0095	0.0082	0.0091	0.0089
Barium (Ba) Emissions					
ug of sample collected	59.30	29.40	≤ 36.80	≤ 31.80	≤ 32.67
ppb	5.31	2.71	≤ 3.14	≤ 2.17	≤ 2.67
ug/dscm	30.31	15.47	≤ 17.96	≤ 12.39	≤ 15.27
lb/hr	0.0006	0.0003	≤ 0.0004	≤ 0.0003	≤ 0.0003

Client: Rk & Associates, Inc.
Facility: Behr Iron and Metal Rockford Facility
Test Location: Lead Pot 2/Lead Pot Dross Drum/Lead Pot 3 (After Cyclone)
Test Method: 5/29

Source Condition	**Normal**	**Normal**	**Normal**	**Normal**	
Date	**10/7/15**	**10/7/15**	**10/7/15**	**10/7/15**	
Start Time	**8:20**	**11:35**	**14:20**	**17:00**	
End Time	**10:37**	**13:43**	**16:28**	**19:05**	**Runs 2 - 4**
	Run 1	**Run 2**	**Run 3**	**Run 4**	**Average**
Stack Conditions					
Average Gas Temperature, °F	90.5	107.6	104.8	105.5	106.0
Flue Gas Moisture, percent by volume	1.4%	1.5%	1.5%	1.5%	1.5%
Average Flue Pressure, in. Hg	28.93	28.93	28.93	28.93	28.93
Gas Sample Volume, dscf	90.277	90.366	90.028	90.979	90.458
Average Gas Velocity, ft/sec	33.540	34.994	34.710	35.134	34.946
Gas Volumetric Flow Rate, acfm	10,891	11,363	11,271	11,408	11,347
Gas Volumetric Flow Rate, dscfm	9,959	10,065	10,034	10,140	10,080
Gas Volumetric Flow Rate, scfm	10,098	10,219	10,185	10,297	10,234
Average %CO_2 by volume, dry basis	0.0	0.0	0.0	0.0	0.0
Average %O_2 by volume, dry basis	20.9	20.9	20.9	20.9	20.9
Isokinetic Variance	102.1	101.1	101.1	101.1	101.1
Heat Input, mmBtu/hr					0.0
Filterable Particulate Matter (Method 5)					
grams collected	0.0174	0.0026	0.0039	0.0030	0.0032
grains/acf	0.0027	0.0004	0.0006	0.0005	0.0005
grains/dscf	0.0030	0.0004	0.0007	0.0005	0.0005
lb/hr	0.254	0.038	0.057	0.044	0.046

Client: Rk & Associates, Inc.
Facility: Behr Iron and Metal Rockford Facility
Test Location: Lead Pot 2/Lead Pot Dross Drum/Lead Pot 3 (After Cyclone)
Test Method: 5/29

Source Condition		**Normal**		**Normal**		**Normal**		**Normal**		
Date		**10/7/15**		**10/7/15**		**10/7/15**		**10/7/15**		
Start Time		**8:20**		**11:35**		**14:20**		**17:00**		
End Time		**10:37**		**13:43**		**16:28**		**19:05**		**Runs 2 - 4**
		Run 1		**Run 2**		**Run 3**		**Run 4**		**Average**
Stack Conditions										
Average Gas Temperature, °F		90.5		107.6		104.8		105.5		106.0
Flue Gas Moisture, percent by volume		1.4%		1.5%		1.5%		1.5%		1.5%
Average Flue Pressure, in. Hg		28.93		28.93		28.93		28.93		28.93
Gas Sample Volume, dscf		90.277		90.366		90.028		90.979		90.458
Average Gas Velocity, ft/sec		33.540		34.994		34.710		35.134		34.946
Gas Volumetric Flow Rate, acfm		10,891		11,363		11,271		11,408		11,347
Gas Volumetric Flow Rate, dscfm		9,959		10,065		10,034		10,140		10,080
Gas Volumetric Flow Rate, scfm		10,098		10,219		10,185		10,297		10,234
Average %CO_2 by volume, dry basis		0.0		0.0		0.0		0.0		0.0
Average %O_2 by volume, dry basis		20.9		20.9		20.9		20.9		20.9
Isokinetic Variance		102.1		101.1		101.1		101.1		101.1
Antimony (Sb) Emissions										
ug of sample collected		72.30		10.11		110.35		8.77		43.08
ppb		5.58		0.78		8.55		0.67		3.33
ug/dscm		28.28		3.95		43.29		3.40		16.88
lb/hr		0.001055		0.000149		0.001627		0.000129		0.000635
Arsenic (As) Emissions										
ug of sample collected		19.29		7.79		9.18		4.56		7.18
ppb		2.42		0.98		1.16		0.57		0.90
ug/dscm		7.55		3.04		3.60		1.77		2.80
lb/hr		0.000281		0.000115		0.000135		0.000067		0.000106
Beryllium (Be) Emissions										
ug of sample collected	≤	0.55	≤	0.55	≤	0.55	≤	0.55	≤	0.55
ppb	≤	0.57	≤	0.57	≤	0.58	≤	0.57	≤	0.57
ug/dscm	≤	0.22	≤	0.21	≤	0.22	≤	0.21	≤	0.21
lb/hr	≤	0.000008	≤	0.000008	≤	0.000008	≤	0.000008	≤	0.000008
Cadmium (Cd) Emissions										
ug of sample collected		1.75		1.30		2.92	≤	0.61	≤	1.61
ppb		0.15		0.11		0.25	≤	0.05	≤	0.13
ug/dscm		0.68		0.51		1.14	≤	0.24	≤	0.63
lb/hr		0.000025		0.000019		0.000043	≤	0.000009	≤	0.000024
Chromium (Cr) Emissions										
ug of sample collected		28.15		64.85		18.85		9.01		30.90
ppb		5.09		11.72		3.42		1.62		5.58
ug/dscm		11.01		25.34		7.39		3.50		12.08
lb/hr		0.000411		0.000955		0.000278		0.000133		0.000455

Client: Rk & Associates, Inc.
Facility: Behr Iron and Metal Rockford Facility
Test Location: Lead Pot 2/Lead Pot Dross Drum/Lead Pot 3 (After Cyclone)
Test Method: 5/29

Source Condition	**Normal**	**Normal**	**Normal**	**Normal**	
Date	**10/7/15**	**10/7/15**	**10/7/15**	**10/7/15**	
Start Time	**8:20**	**11:35**	**14:20**	**17:00**	
End Time	**10:37**	**13:43**	**16:28**	**19:05**	**Runs 2 - 4**
	Run 1	**Run 2**	**Run 3**	**Run 4**	**Average**
Stack Conditions					
Average Gas Temperature, °F	90.5	107.6	104.8	105.5	106.0
Flue Gas Moisture, percent by volume	1.4%	1.5%	1.5%	1.5%	1.5%
Average Flue Pressure, in. Hg	28.93	28.93	28.93	28.93	28.93
Gas Sample Volume, dscf	90.277	90.366	90.028	90.979	90.458
Average Gas Velocity, ft/sec	33.540	34.994	34.710	35.134	34.946
Gas Volumetric Flow Rate, acfm	10,891	11,363	11,271	11,408	11,347
Gas Volumetric Flow Rate, dscfm	9,959	10,065	10,034	10,140	10,080
Gas Volumetric Flow Rate, scfm	10,098	10,219	10,185	10,297	10,234
Average %CO_2 by volume, dry basis	0.0	0.0	0.0	0.0	0.0
Average %O_2 by volume, dry basis	20.9	20.9	20.9	20.9	20.9
Isokinetic Variance	102.1	101.1	101.1	101.1	101.1
Cobalt (Co) Emissions					
ug of sample collected	3.94	2.42	2.84	1.34	2.20
ppb	0.63	0.39	0.45	0.21	0.35
ug/dscm	1.54	0.95	1.11	0.52	0.86
lb/hr	0.00006	0.00004	0.00004	0.00002	0.00003
Copper (Cu) Emissions					
ug of sample collected	232.60	95.20	179.90	84.20	119.77
ppb	34.41	14.07	26.69	12.36	17.71
ug/dscm	90.99	37.20	70.57	32.68	46.82
lb/hr	0.0034	0.0014	0.0027	0.0012	0.0018
Lead (Pb) Emissions					
ug of sample collected	1789.46	781.36	1484.77	1666.27	1310.80
ppb	81.20	35.42	67.56	75.03	59.34
ug/dscm	700.00	305.35	582.42	646.78	511.52
lb/hr	0.0261	0.0115	0.0219	0.0246	0.0193
Manganese (Mn) Emissions					
ug of sample collected	12.27	5.28	7.28 ≤	5.22 ≤	5.93
ppb	2.10	0.90	1.25 ≤	0.89 ≤	1.01
ug/dscm	4.80	2.06	2.86 ≤	2.03 ≤	2.32
lb/hr	0.0002	0.0001	0.0001 ≤	0.0001 ≤	0.0001
Nickel (Ni) Emissions					
ug of sample collected	44.11	27.71	23.87	13.89	21.82
ppb	7.06	4.43	3.83	2.21	3.49
ug/dscm	17.26	10.83	9.36	5.39	8.53
lb/hr	0.0006	0.0004	0.0004	0.0002	0.0003

Client: Rk & Associates, Inc.
Facility: Behr Iron and Metal Rockford Facility
Test Location: Lead Pot 2/Lead Pot Dross Drum/Lead Pot 3 (After Cyclone)
Test Method: 5/29

Source Condition		**Normal**		**Normal**		**Normal**		**Normal**		
Date		**10/7/15**		**10/7/15**		**10/7/15**		**10/7/15**		
Start Time		**8:20**		**11:35**		**14:20**		**17:00**		
End Time		**10:37**		**13:43**		**16:28**		**19:05**		**Runs 2 -4**
		Run 1		**Run 2**		**Run 3**		**Run 4**		**Average**
Stack Conditions										
Average Gas Temperature, °F		90.5		107.6		104.8		105.5		106.0
Flue Gas Moisture, percent by volume		1.4%		1.5%		1.5%		1.5%		1.5%
Average Flue Pressure, in. Hg		28.93		28.93		28.93		28.93		28.93
Gas Sample Volume, dscf		90.277		90.366		90.028		90.979		90.458
Average Gas Velocity, ft/sec		33.540		34.994		34.710		35.134		34.946
Gas Volumetric Flow Rate, acfm		10,891		11,363		11,271		11,408		11,347
Gas Volumetric Flow Rate, dscfm		9,959		10,065		10,034		10,140		10,080
Gas Volumetric Flow Rate, scfm		10,098		10,219		10,185		10,297		10,234
Average %CO_2 by volume, dry basis		0.0		0.0		0.0		0.0		0.0
Average %O_2 by volume, dry basis		20.9		20.9		20.9		20.9		20.9
Isokinetic Variance		102.1		101.1		101.1		101.1		101.1
Selenium (Se) Emissions										
ug of sample collected	≤	5.55	≤	5.71	≤	5.53	≤	5.50	≤	5.58
ppb	≤	0.66	≤	0.68	≤	0.66	≤	0.65	≤	0.66
ug/dscm	≤	2.17	≤	2.23	≤	2.17	≤	2.13	≤	2.18
lb/hr	≤	0.0001	≤	0.0001	≤	0.0001	≤	0.0001	≤	0.0001
Silver (Ag) Emissions										
ug of sample collected	≤	1.11	≤	2.15	≤	1.24	≤	1.16	≤	1.52
ppb	≤	0.10	≤	0.19	≤	0.11	≤	0.10	≤	0.13
ug/dscm	≤	0.43	≤	0.84	≤	0.49	≤	0.45	≤	0.59
lb/hr	≤	0.00002	≤	0.00003	≤	0.00002	≤	0.00002	≤	0.00002
Zinc (Zn) Emissions										
ug of sample collected		191.20		68.90		105.20		55.20		76.43
ppb		27.50		9.90		15.17		7.88		10.98
ug/dscm		74.79		26.93		41.27		21.43		29.88
lb/hr		0.0028		0.0010		0.0016		0.0008		0.0011
Barium (Ba) Emissions										
ug of sample collected	≤	16.70	≤	18.30		13.20	≤	18.30	≤	16.60
ppb	≤	1.14	≤	1.25		0.91	≤	1.24	≤	1.13
ug/dscm	≤	6.53	≤	7.15		5.18	≤	7.10	≤	6.48
lb/hr	≤	0.0002	≤	0.0003		0.0002	≤	0.0003	≤	0.0003

Client: Rk & Associates, Inc.
Facility: Behr Iron and Metal Rockford Facility
Test Location: Blue Baghouse Outlet
Test Method: 5/29

Source Condition	**Normal**	**Normal**	**Normal**	**Normal**	
Date	**10/7/15**	**10/7/15**	**10/7/15**	**10/7/15**	
Start Time	**8:20**	**11:35**	**14:20**	**17:00**	
End Time	**10:39**	**13:43**	**16:28**	**19:05**	**Runs 2 - 4**
	Run 1	**Run 2**	**Run 3**	**Run 4**	**Average**
Stack Conditions					
Average Gas Temperature, °F	84.9	93.6	97.6	94.6	95.3
Flue Gas Moisture, percent by volume	1.2%	1.7%	1.5%	1.5%	1.6%
Average Flue Pressure, in. Hg	29.26	29.26	29.26	29.26	29.26
Gas Sample Volume, dscf	143.295	77.402	73.402	76.722	75.842
Average Gas Velocity, ft/sec	67.259	37.441	35.696	36.538	36.558
Gas Volumetric Flow Rate, acfm	37,000	20,596	19,637	20,100	20,111
Gas Volumetric Flow Rate, dscfm	34,633	18,885	17,903	18,430	18,406
Gas Volumetric Flow Rate, scfm	35,058	19,207	18,182	18,710	18,700
Average %CO_2 by volume, dry basis	0.0	0.0	0.0	0.0	0.0
Average %O_2 by volume, dry basis	20.9	20.9	20.9	20.9	20.9
Isokinetic Variance	101.5	100.6	100.6	102.2	101.1
Heat Input, mmBtu/hr					0.0
Filterable Particulate Matter (Method 5)					
grams collected	0.0068	0.0060	0.0061	0.0058	0.0060
grains/acf	0.0007	0.0011	0.0012	0.0011	0.0011
grains/dscf	0.0007	0.0012	0.0013	0.0012	0.0012
lb/hr	0.217	0.194	0.197	0.184	0.192

Client: Rk & Associates, Inc.
Facility: Behr Iron and Metal Rockford Facility
Test Location: Blue Baghouse Outlet
Test Method: 5/29

Source Condition	Normal	Normal	Normal	Normal	
Date	10/7/15	10/7/15	10/7/15	10/7/15	
Start Time	8:20	11:35	14:20	17:00	
End Time	10:39	13:43	16:28	19:05	Runs 2 - 4
	Run 1	Run 2	Run 3	Run 4	Average
Stack Conditions					
Average Gas Temperature, °F	84.9	93.6	97.6	94.6	95.3
Flue Gas Moisture, percent by volume	1.2%	1.7%	1.5%	1.5%	1.6%
Average Flue Pressure, in. Hg	29.26	29.26	29.26	29.26	29.26
Gas Sample Volume, dscf	143.295	77.402	73.402	76.722	75.842
Average Gas Velocity, ft/sec	67.259	37.441	35.696	36.538	36.558
Gas Volumetric Flow Rate, acfm	37,000	20,596	19,637	20,100	20,111
Gas Volumetric Flow Rate, dscfm	34,633	18,885	17,903	18,430	18,406
Gas Volumetric Flow Rate, scfm	35,058	19,207	18,182	18,710	18,700
Average %CO_2 by volume, dry basis	0.0	0.0	0.0	0.0	0.0
Average %O_2 by volume, dry basis	20.9	20.9	20.9	20.9	20.9
Isokinetic Variance	101.5	100.6	100.6	102.2	101.1
Heat Input, mmBtu/hr					0.0
Antimony (Sb) Emissions					
ug of sample collected	6.26	≤ 1.87	≤ 1.66	≤ 1.18	≤ 1.57
ppb	0.31	≤ 0.17	≤ 0.16	≤ 0.11	≤ 0.14
ug/dscm	1.54	≤ 0.85	≤ 0.80	≤ 0.54	≤ 0.73
lb/hr	0.000200	≤ 0.000060	≤ 0.000054	≤ 0.000037	≤ 0.000050
Arsenic (As) Emissions					
ug of sample collected	≤ 4.29	≤ 1.20	≤ 1.00	≤ 1.00	≤ 1.07
ppb	≤ 0.34	≤ 0.18	≤ 0.15	≤ 0.15	≤ 0.16
ug/dscm	≤ 1.06	≤ 0.55	≤ 0.48	≤ 0.46	≤ 0.50
lb/hr	≤ 0.000137	≤ 0.000039	≤ 0.000032	≤ 0.000032	≤ 0.000034
Beryllium (Be) Emissions					
ug of sample collected	≤ 0.25	≤ 0.25	≤ 0.25	≤ 0.25	≤ 0.25
ppb	≤ 0.16	≤ 0.30	≤ 0.32	≤ 0.31	≤ 0.31
ug/dscm	≤ 0.06	≤ 0.11	≤ 0.12	≤ 0.12	≤ 0.12
lb/hr	≤ 0.000008	≤ 0.000008	≤ 0.000008	≤ 0.000008	≤ 0.000008
Cadmium (Cd) Emissions					
ug of sample collected	0.53	≤ 1.69	1.10	≤ 0.25	≤ 1.01
ppb	0.03	≤ 0.17	0.11	≤ 0.03	≤ 0.10
ug/dscm	0.13	≤ 0.77	0.53	≤ 0.12	≤ 0.47
lb/hr	0.000017	≤ 0.000055	0.000035	≤ 0.000008	≤ 0.000033
Chromium (Cr) Emissions					
ug of sample collected	7.58	7.13	5.76	4.21	5.70
ppb	0.86	1.50	1.28	0.90	1.23
ug/dscm	1.87	3.25	2.77	1.94	2.65
lb/hr	0.000242	0.000230	0.000186	0.000134	0.000183

Client: Rk & Associates, Inc.
Facility: Behr Iron and Metal Rockford Facility
Test Location: Blue Baghouse Outlet
Test Method: 5/29

Source Condition	Normal	Normal	Normal	Normal	
Date	10/7/15	10/7/15	10/7/15	10/7/15	
Start Time	8:20	11:35	14:20	17:00	
End Time	10:39	13:43	16:28	19:05	Runs 2 - 4
	Run 1	Run 2	Run 3	Run 4	Average
Stack Conditions					
Average Gas Temperature, °F	84.9	93.6	97.6	94.6	95.3
Flue Gas Moisture, percent by volume	1.2%	1.7%	1.5%	1.5%	1.6%
Average Flue Pressure, in. Hg	29.26	29.26	29.26	29.26	29.26
Gas Sample Volume, dscf	143.295	77.402	73.402	76.722	75.842
Average Gas Velocity, ft/sec	67.259	37.441	35.696	36.538	36.558
Gas Volumetric Flow Rate, acfm	37,000	20,596	19,637	20,100	20,111
Gas Volumetric Flow Rate, dscfm	34,633	18,885	17,903	18,430	18,406
Gas Volumetric Flow Rate, scfm	35,058	19,207	18,182	18,710	18,700
Average %CO_2 by volume, dry basis	0.0	0.0	0.0	0.0	0.0
Average %O_2 by volume, dry basis	20.9	20.9	20.9	20.9	20.9
Isokinetic Variance	101.5	100.6	100.6	102.2	101.1
Cobalt (Co) Emissions					
ug of sample collected	4.87	2.87	2.79	1.85	2.50
ppb	0.49	0.53	0.55	0.35	0.48
ug/dscm	1.20	1.31	1.34	0.85	1.17
lb/hr	0.0002	0.0001	0.0001	0.0001	0.0001
Copper (Cu) Emissions					
ug of sample collected	267.60	169.30	158.80	85.30	137.80
ppb	24.94	29.21	28.90	14.85	24.319
ug/dscm	65.95	77.24	76.40	39.26	64.30
lb/hr	0.0086	0.0055	0.0051	0.0027	0.0044
Lead (Pb) Emissions					
ug of sample collected	237.87	59.35	43.96	38.01	47.11
ppb	6.80	3.14	2.45	2.03	2.54
ug/dscm	58.62	27.08	21.15	17.50	21.91
lb/hr	0.0076	0.0019	0.0014	0.0012	0.0015
Manganese (Mn) Emissions					
ug of sample collected	22.37	9.94	9.87	6.22	8.68
ppb	2.41	1.98	2.08	1.25	1.77
ug/dscm	5.51	4.54	4.75	2.86	4.05
lb/hr	0.0007	0.0003	0.0003	0.0002	0.0003
Nickel (Ni) Emissions					
ug of sample collected	58.09	61.93	50.67	26.38	46.33
ppb	5.86	11.57	9.98	4.97	8.84
ug/dscm	14.32	28.26	24.38	12.14	21.59
lb/hr	0.0019	0.0020	0.0016	0.0008	0.0015

Client: Rk & Associates, Inc.
Facility: Behr Iron and Metal Rockford Facility
Test Location: Blue Baghouse Outlet
Test Method: 5/29

Source Condition	Normal	Normal	Normal	Normal	
Date	10/7/15	10/7/15	10/7/15	10/7/15	
Start Time	8:20	11:35	14:20	17:00	
End Time	10:39	13:43	16:28	19:05	Runs 2 - 4
	Run 1	Run 2	Run 3	Run 4	Average
Stack Conditions					
Average Gas Temperature, °F	84.9	93.6	97.6	94.6	95.3
Flue Gas Moisture, percent by volume	1.2%	1.7%	1.5%	1.5%	1.6%
Average Flue Pressure, in. Hg	29.26	29.26	29.26	29.26	29.26
Gas Sample Volume, dscf	143.295	77.402	73.402	76.722	75.842
Average Gas Velocity, ft/sec	67.259	37.441	35.696	36.538	36.558
Gas Volumetric Flow Rate, acfm	37,000	20,596	19,637	20,100	20,111
Gas Volumetric Flow Rate, dscfm	34,633	18,885	17,903	18,430	18,406
Gas Volumetric Flow Rate, scfm	35,058	19,207	18,182	18,710	18,700
Average %CO_2 by volume, dry basis	0.0	0.0	0.0	0.0	0.0
Average %O_2 by volume, dry basis	20.9	20.9	20.9	20.9	20.9
Isokinetic Variance	101.5	100.6	100.6	102.2	101.1
Selenium (Se) Emissions					
ug of sample collected	≤ 4.54	≤ 2.50	≤ 2.91	≤ 2.50	≤ 2.64
ppb	≤ 0.34	≤ 0.35	≤ 0.43	≤ 0.35	≤ 0.37
ug/dscm	≤ 1.12	≤ 1.14	≤ 1.40	≤ 1.15	≤ 1.23
lb/hr	≤ 0.0001	≤ 0.0001	≤ 0.0001	≤ 0.0001	≤ 0.0001
Silver (Ag) Emissions					
ug of sample collected	≤ 0.89	≤ 0.52	≤ 0.93	≤ 1.34	≤ 0.93
ppb	≤ 0.05	≤ 0.05	≤ 0.10	≤ 0.14	≤ 0.10
ug/dscm	≤ 0.22	≤ 0.24	≤ 0.45	≤ 0.62	≤ 0.44
lb/hr	≤ 0.00003	≤ 0.00002	≤ 0.00003	≤ 0.00004	≤ 0.00003
Zinc (Zn) Emissions					
ug of sample collected	242.80	103.00	95.60	≤ 60.50	≤ 86.37
ppb	22.00	17.28	16.91	≤ 10.24	≤ 14.81
ug/dscm	59.84	46.99	45.99	≤ 27.85	≤ 40.28
lb/hr	0.0078	0.0033	0.0031	≤ 0.0019	≤ 0.0028
Barium (Ba) Emissions					
ug of sample collected	6.50	6.30	≤ 6.20	≤ 4.10	≤ 5.53
ppb	0.28	0.50	≤ 0.52	≤ 0.33	≤ 0.45
ug/dscm	1.60	2.87	≤ 2.98	≤ 1.89	≤ 2.58
lb/hr	0.0002	0.0002	≤ 0.0002	≤ 0.0001	≤ 0.0002

4.0 CERTIFICATION

MOSTARDI PLATT is pleased to have been of service to RK & Associates, Inc. If you have any questions regarding this test report, please do not hesitate to contact us at 630-993-2100.

CERTIFICATION

As pr oject m anager, I hereby c ertify t hat this t est r eport r epresents a t rue and a ccurate summary of emissions test results and the methodologies employed to obtain those results, and the test program was performed in accordance with the methods specified in this test report.

MOSTARDI PLATT

_____ Program Manager
Mark E. Peterson

_____ Quality Assurance
Eric L. Ehlers

Appendix A - Test Section Diagrams

EQUAL AREA TRAVERSE FOR ROUND DUCTS

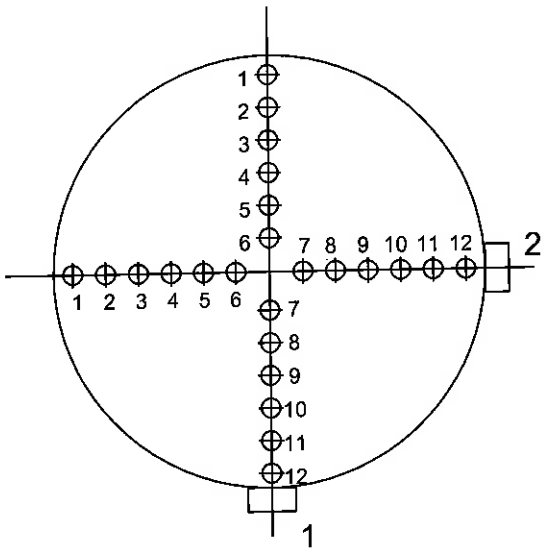

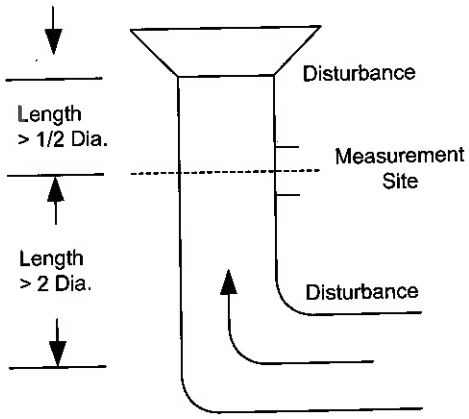

Job:	Behr Iron & Metal
Date:	October 7, 2015
Test Location:	Sweeco Separator
Duct Diameter:	16”
Duct Area:	1.396
No. Points Across Diameter:	12
No. of Ports:	2
Port Length:	4”

EQUAL AREA TRAVERSE FOR ROUND DUCTS

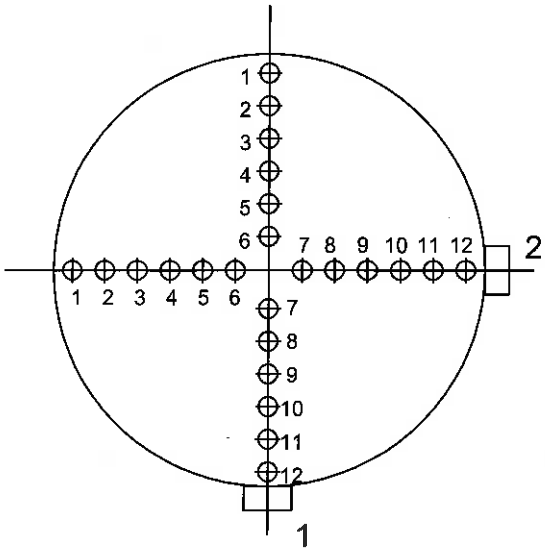

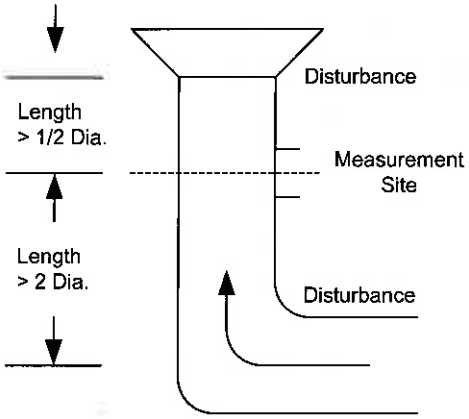

Job:	Behr Iron & Metal
Date:	October 7, 2015
Test Location:	Leat Pot 2/Lead Pot Dross Drum/ Lead Pot 3 (After Cyclone)
Duct Diameter:	31.5””
Duct Area:	5.412
No. Points Across Diameter:	12
No. of Ports:	2
Port Length:	4.5”

EQUAL AREA TRAVERSE FOR ROUND DUCTS

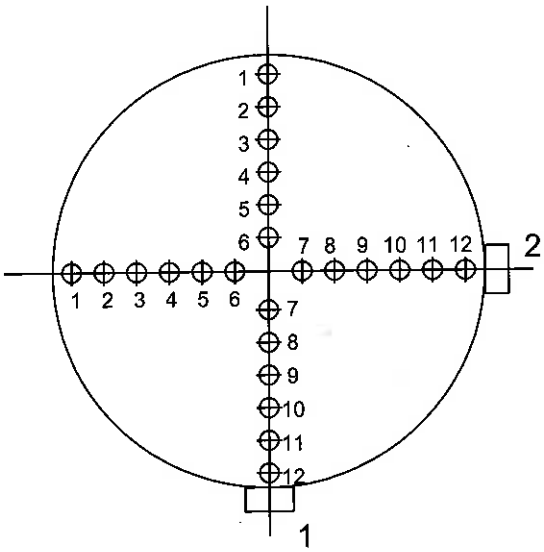

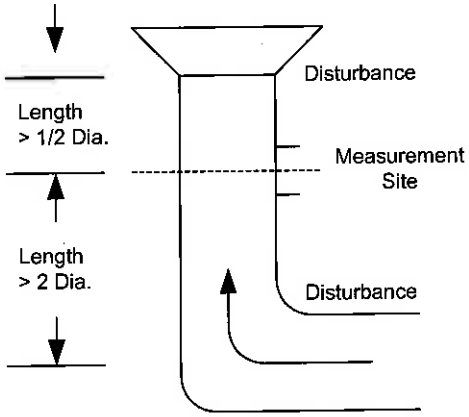

Job:	Behr Iron & Metal
Date:	October 7, 2015
Test Location:	Blue Baghouse Outlet
Duct Diameter:	41""
Duct Area:	9.168
No. Points Across Diameter:	12
No. of Ports:	2
Port Length:	6"

Appendix B - Sample Train Diagrams

USEPA Method 2- Type S Pitot Tube Manometer Assembly

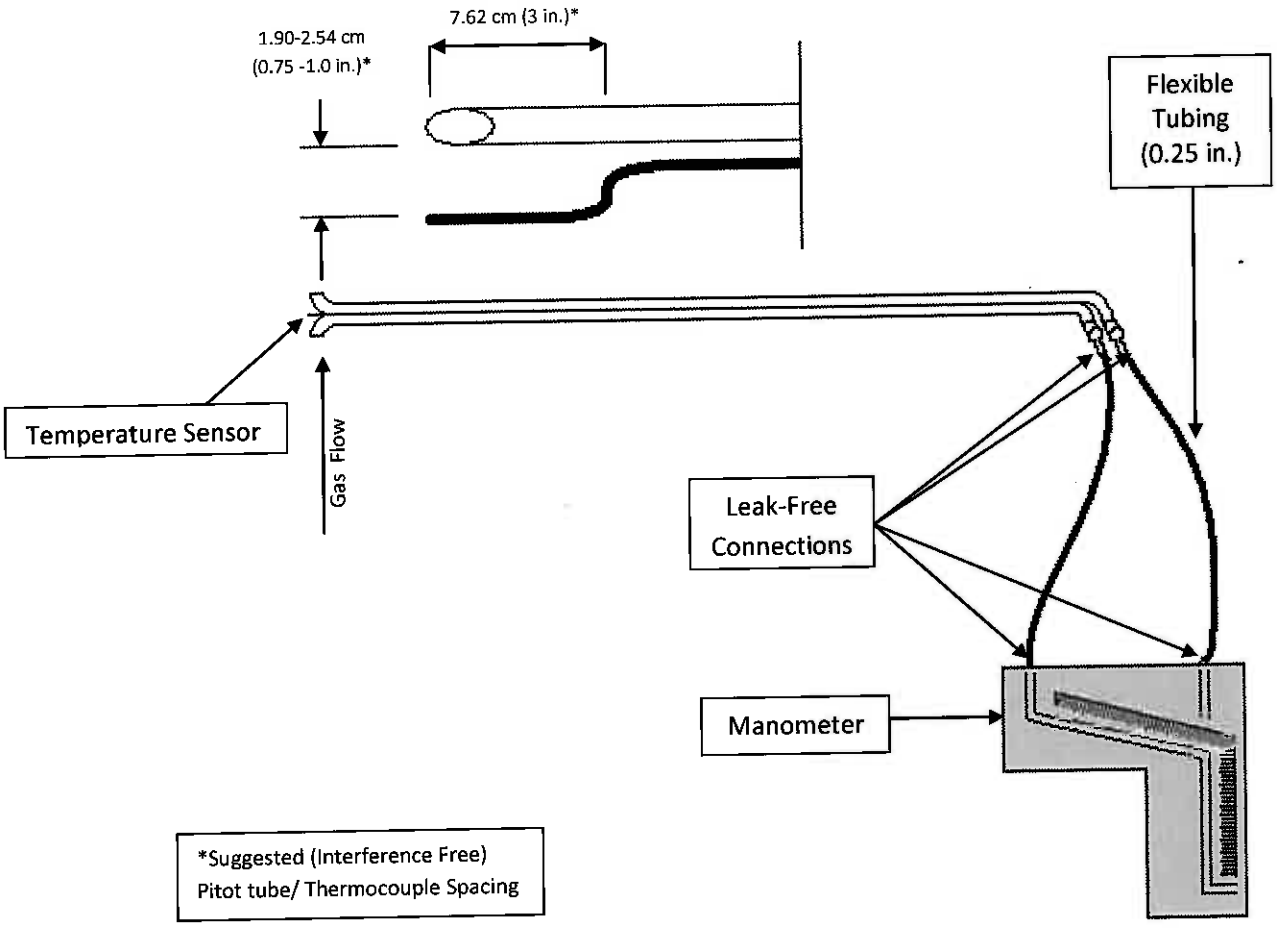

USEPA Method 29- Metals Sample Train Diagram

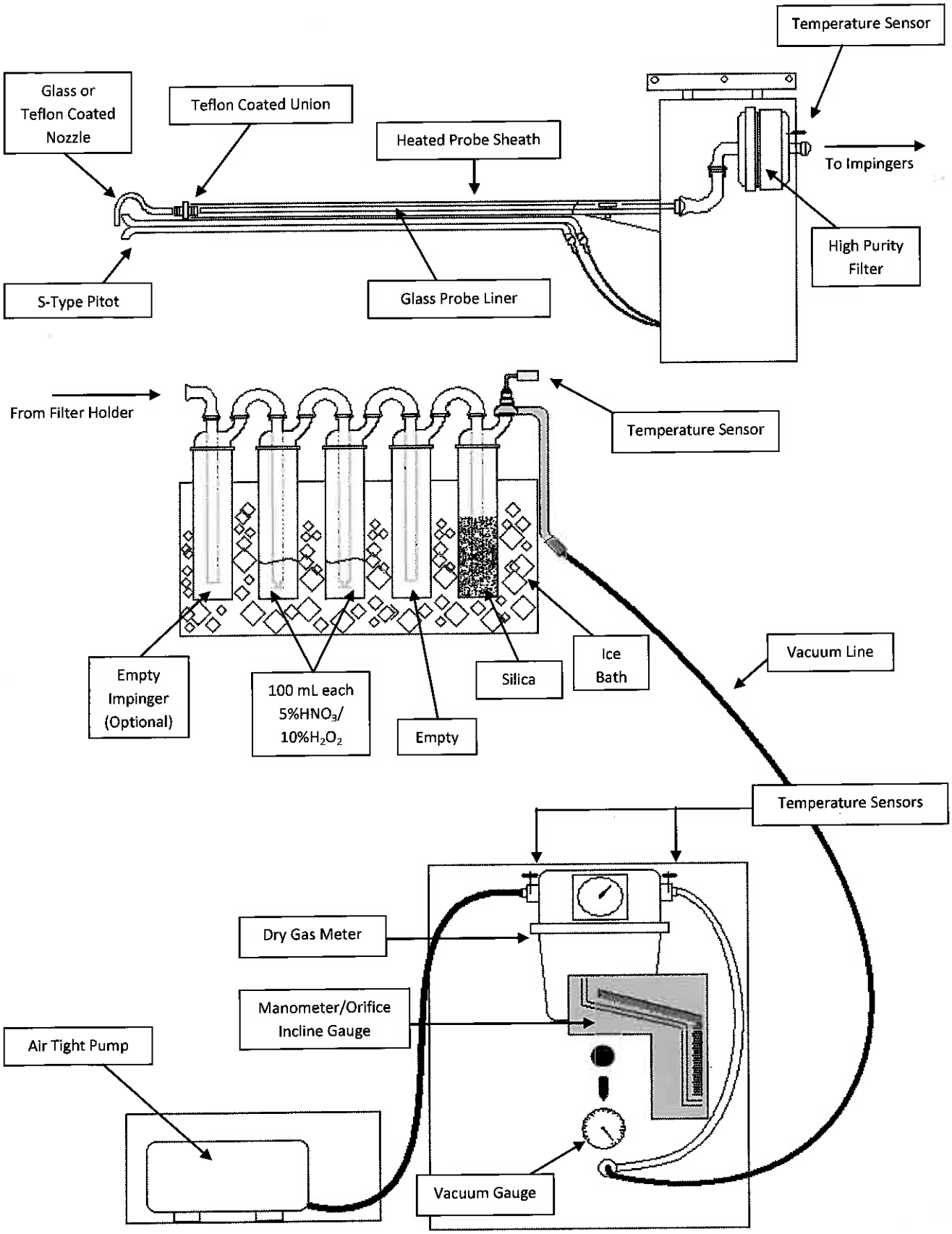

USEPA Method 3A - Integrated Oxygen/Carbon Dioxide Sample Train Diagram Utilizing Tedlar Gas Bag

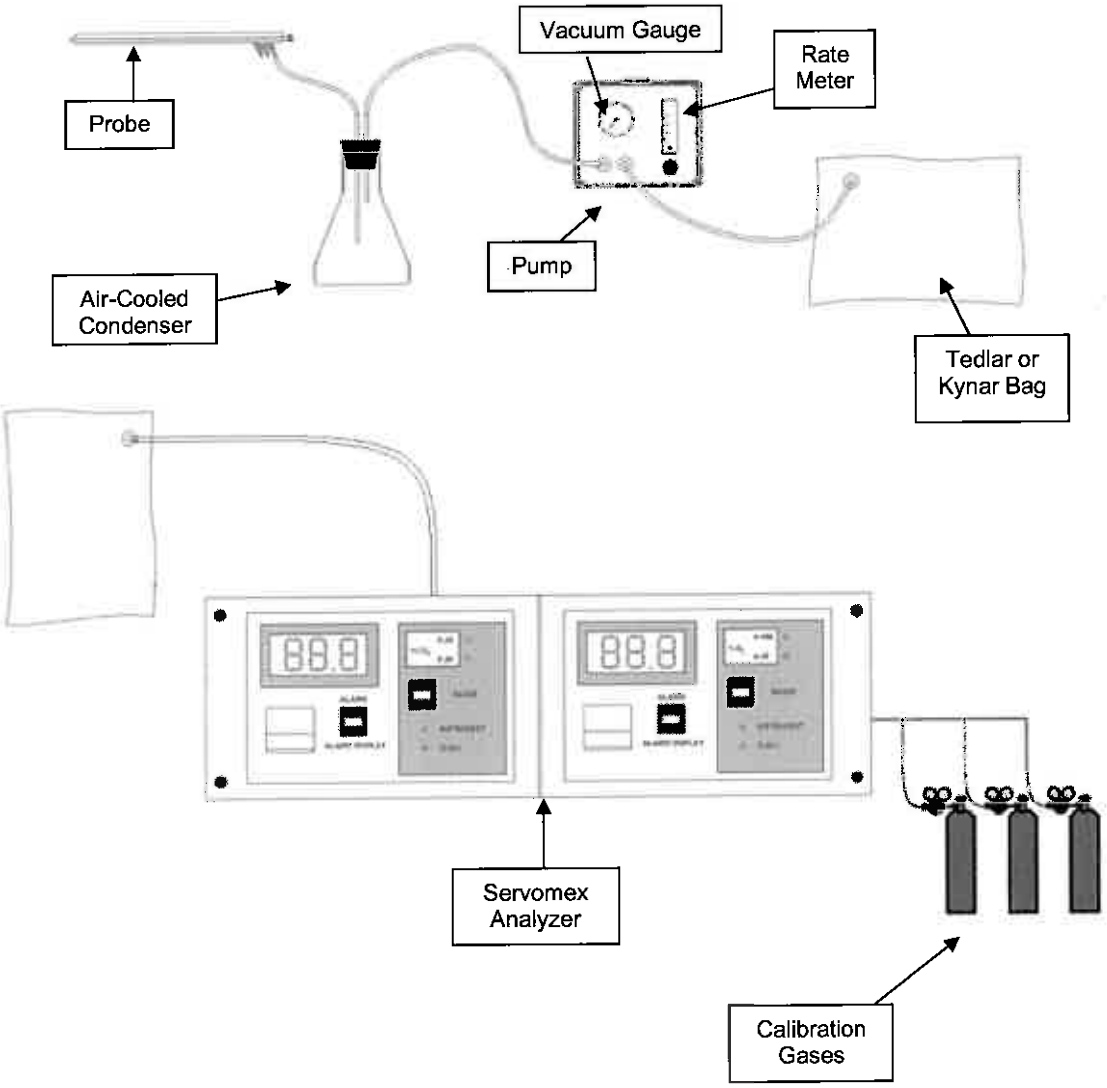

USEPA Method 3 - Integrated Oxygen/Carbon Dioxide Sample Train Diagram Utilizing Fyrite Gas Analyzer

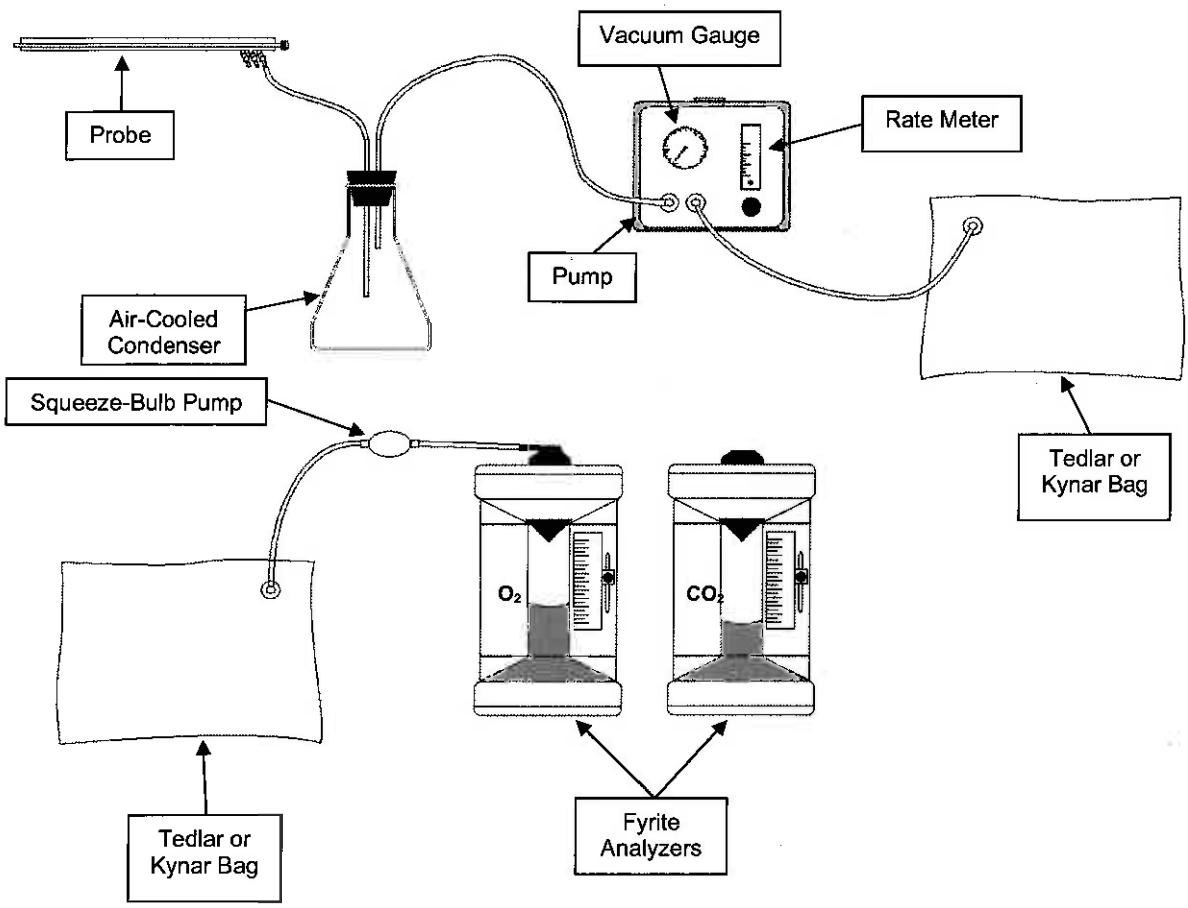

Appendix C - Calculation Nomenclature and Formulas

Client:	Rk & Associates, Inc.
Facility:	Behr Iron and Metal Rockford Facility
Test Location:	Sweeco Separator
Run:	1
Date:	10/7/2015
Method:	5/29
Source Condition:	Normal

Dry Molecular Weight

$$Md = 0.44 \times (\%CO_2) + 0.32 \times (\%O_2) + 0.28 \times \%N_2$$

$\%CO_2$ = 0.0 $\%O_2$ = 20.9 $\%N_2$ = 79.1

Md = 28.836

Wet Molecular Weight

$$Ms = Md \times (1-Bws) + (18.0 \times Bws)$$

Md = 28.836 Bws = 0.013

Ms = 28.690

Meter Volume at Standard Conditions

$$Vm(std) = 17.647 \times Y \times Vm \times \frac{(Pbar + DH/13.6)}{Tm}$$

Y = 0.990 Vm = 72.045 Pbar = 29.33

DH = 0.94 Tm = 535.6

Vm(std) = 69.081

Volume of Water Vapor Condensed

$$Vw(std) = 0.0471 \times (\text{net } H_2O \text{ gain})$$

Net H_2O = 20.0

Vw(std) = 0.942

Moisture Content

$$Bws = \frac{Vwc(std)}{Vwc(std) + Vm(std)}$$

Vw(std) = 0.942 Vm(std) = 69.081

Bws = 0.013 0.015206527

Client:	Rk & Associates, Inc.
Facility:	Behr Iron and Metal Rockford Facility
Test Location:	Sweeco Separator
Run:	1
Date:	10/7/2015
Method:	5/29
Source Condition:	Normal

Average Duct Velocity

$$Vs = 85.49 \times Cp \times \text{Sqrt DP (avg)} \times (Ts\ (avg) / (Ps \times Ms))^{1/2}$$

Cp = 0.840 Ts (avg) = 527.8 Sqrt DP (avg): 1.133
Ps = 28.96 Ms = 28.690

Vs = 64.835

Volumetric Flow Rate (Actual Basis)

$$Q = Vs \times A \times 60$$

Vs = 64.835 A = 1.396

Q = 5,431

Volumetric Flow Rate (Standard Basis)

$$Qstd = 17.647 \times Q \times \frac{Ps}{Ts\ (avg)}$$

Q = 5,431 Ps = 28.96 Ts (avg) = 527.8

Qstd = 5,259

Volumetric Flow Rate (Standard Dry Basis)

$$Qstd(dry) = Qstd \times (1-Bws)$$

Qstd = 5,259 Bws = 0.013

Qstd(dry) = 5,188

Isokinetic Variation:

$$\%ISO = \frac{0.0945 \times Ts \times Vm(std)}{Vs \times \theta \times An \times Ps \times (1-Bws)}$$

Ts = 527.8 Vm(std) = 69.081 Vs = 64.835
An = 0.0001558 θ = 120 Ps = 28.96
Bws = 0.013

%ISO = 99.5

Client:	**Rk & Associates, Inc.**
Facility:	**Behr Iron and Metal Rockford Facility**
Test Location:	**Sweeco Separator**
Run:	**1**
Date:	**10/7/2015**
Method:	**5/29**
Source Condition:	**Normal**

PM Concentration:
This example represents the filterable fraction. For other fractions, use the obtained mn for that particulate fraction.

$$Co = \frac{m_n \times 15.43}{Vm(std)}$$

m_n (g) = 0.0920 Vm(std) = 69.081

Co = 0.0205 gr/dscf

PM Emission Rate:

$$\text{Emission Rate lb/hr} = \frac{Co}{7{,}000} \times Qstd(dry) \times 60$$

Co = 0.0205 Qstd(dry) = 5,188

Emission Rate lb/hr = 0.914 lb/hr

Client:	Rk & Associates, Inc.
Facility:	Behr Iron and Metal Rockford Facility
Test Location:	Sweeco Separator
Run:	1
Date:	10/7/2015
Method:	5/29
Source Condition:	Normal

Dry Molecular Weight

$$Md = 0.44 \times (\%CO_2) + 0.32 \times (\%O_2) + 0.28 \times \%N_2$$

$\%CO_2$ = 0.0 $\%O_2$ = 20.9 $\%N_2$ = 79.1

Md = 28.836

Wet Molecular Weight

$$Ms = Md \times (1-Bws) + (18.0 \times Bws)$$

Md = 28.836 Bws = 0.013

Ms = 28.690

Meter Volume at Standard Conditions

$$Vm(std) = 17.647 \times Y \times Vm \times \frac{(Pbar + DH/13.6)}{Tm}$$

Y = 0.990 Vm = 72.045 Pbar = 29.3

DH = 0.9 Tm = 535.6

Vm(std) = 69.081

Volume of Water Vapor Condensed

$$Vw(std) = 0.0471 \times (\text{net } H_2O \text{ gain})$$

Net H_2O = 20.0

Vw(std) = 0.942

Moisture Content

$$Bws = \frac{Vwc(std)}{Vwc(std) + Vm(std)}$$

Vw(std) = 0.942 Vm(std) = 69.081

Bws = 0.013

Average Duct Velocity

$$Vs = 85.49 \times Cp \times \text{Sqrt DP (avg)} \times (Ts\ (avg)/(Ps \times Ms))^{1/2}$$

Cp = 0.840 Ts (avg) = 527.8 Sqrt DP (avg): 1.133

Ps = 28.96 Ms = 28.690

Vs = 64.835

Client:	Rk & Associates, Inc.
Facility:	Behr Iron and Metal Rockford Facility
Test Location:	Sweeco Separator
Run:	1
Date:	10/7/2015
Method:	5/29
Source Condition:	Normal

Volumetric Flow Rate (Actual Basis)

$$Q = Vs \times A \times 60$$

Vs = 64.835 A = 1.396

Q = 5,431

Volumetric Flow Rate (Standard Basis)

$$Qstd = 17.647 \times Q \times \frac{Ps}{Ts\ (avg)}$$

Q = 5,431 Ps = 28.96 Ts (avg) = 527.8

Qstd = 5,259

Volumetric Flow Rate (Standard Dry Basis)

$$Qstd(dry) = Qstd \times (1-Bws)$$

Qstd = 5,259 Bws = 0.013

Qstd(dry) = 5,188

Isokinetic Variation:

$$\%ISO = \frac{0.0945 \times Ts \times Vm(std)}{Vs \times \theta \times An \times Ps \times (1-Bws)}$$

Ts = 527.8 Vm(std) = 69.081 Vs = 64.835
An = 0.0001558 θ = 120 Ps = 28.96
Bws = 0.013

%ISO = 99.5

Client:	Rk & Associates, Inc.
Facility:	Behr Iron and Metal Rockford Facility
Test Location:	Sweeco Separator
Run:	1
Date:	10/7/2015
Method:	5/29
Source Condition:	Normal

Antimony (Sb) Concentration:

$$\mu g/m^3 = \frac{\mu g \text{ of Antimony (Sb)}}{Vm(std) \times 0.02832\ m^3/ft^3}$$

µg= 7.11 Vm(std) = 69.081

$\mu g/m^3$= 3.63

Antimony (Sb) Emission Rate:

$$\text{lb of Antimony (Sb)} = \frac{\mu g \text{ of sample} \times 10^{-6}\ grams/\mu g}{453.6\ grams/lb}$$

lb of Antimony (Sb) = 1.57E-08 dscfm = 5,188

$$\text{Emission Rate lb/hr} = \frac{\text{lb of Antimony (Sb)}}{Vm(std)} \times dscfm \times 60\ min/hr$$

Emission Rate lb/hr = 0.000

MOSTARDI PLATT

Volumetric Flow Nomenclature

A = Cross-sectional area of stack or duct, ft2
Bws = Water vapor in gas stream, proportion by volume
Cp = Pitot tube coefficient, dimensionless
Md = Dry molecular weight of gas, lb/lb-mole
Ms = Molecular weight of gas, wet basis, lb/lb-mole
Mw = Molecular weight of water, 18.0 lb/lb-mole
Pbar = Barometric pressure at testing site, in. Hg
Pg = Static pressure of gas, in. Hg (in. H2O/13.6)
DH= Static pressure of gas, in.H2O
Ps = Absolute pressure of gas, in. Hg = Pbar + Pg
Pstd = Standard absolute pressure, 29.92 in. Hg
Acfm = Actual volumetric gas flow rate
Scfm= Volumetric gas flow rate, corrected to standard conditions
Dscfm = Standard volumetric flow rate, corrected to dry conditions
R = Ideal gas constant, 21.85 in. Hg-ft3/°R-lb-mole
Ts = Average stack gas temperature, °F
Tm = Average dry gas meter temperature, oF
Tstd = Standard absolute temperature, 528°R
vs = Gas velocity, ft/sec
Vm(std)= Volume of gas sampled, corrected to standard conditions, scf
Vw(std) = Volume of water vapor in gas sample, corrected to standard conditions, scf
Vlc= Volume of liquid collected
Y = Dry gas meter calibration factor
Δp = Velocity head of gas, in. H2O
K1 = 17.647 °R/in. Hg
%EA = Percent excess air
%CO2 = Percent carbon dioxide by volume, dry basis
%O2 = Percent oxygen by volume, dry basis
%N2 = Percent nitrogen by volume, dry basis
0.264 = Ratio of O2 to N2 in air, v/v
0.28 = Molecular weight of N2 or CO, divided by 100
0.32 = Molecular weight of O2 divided by 100
0.44 = Molecular weight of CO2 divided by 100
13.6 = Specific gravity of mercury (Hg)

MOSTARDI PLATT

Volumetric Air Flow Calculations

$$Vm\ (std) = 17.647 \times Vm \times \left[\frac{\left(P_{bar} + \left[\frac{DH}{13.6}\right]\right)}{(460 + Tm)}\right] \times Y$$

$$Vw\ (std) = 0.0471 \times Vlc$$

$$Bws = \left[\frac{Vw\ (std)}{Vw\ (std) + Vm\ (std)}\right]$$

$$Md = (0.44 \times \%CO_2) + (0.32 \times \%O_2) + [0.28 \times (100 - \%CO_2 - \%O_2)]$$

$$Ms = Md \times (1 - Bws) + (18 \times Bws)$$

$$Vs = \sqrt{\frac{(Ts + 460)}{Ms \times Ps}} \times \sqrt{DP} \times Cp \times 85.49$$

$$Acfm = Vs \times Area\ (of\ stack\ or\ duct) \times 60$$

$$Scfm = Acfm \times 17.647 \times \left[\frac{Ps}{(460 + Ts)}\right]$$

$$Scfh = Scfm \times 60 \frac{min}{hr}$$

$$Dscfm = Scfm \times (1 - Bws)$$

MOSTARDI PLATT

Isokinetic Nomenclature

A = Cross-sectional area of stack or duct, square feet
A_n = Cross-sectional area of nozzle, square feet
B_{ws} = Water vapor in gas stream, by volume
C_a = Acetone blank residue concentration, g/g
C_{acf} = Concentration of particulate matter in gas stream at actual conditions, gr/acf
C_p = Pitot tube coefficient
C_s = Concentration of particulate matter in gas stream, dry basis, corrected to standard conditions, gr/dscf
IKV = Isokinetic sampling variance, must be 90.0 % ≤ IKV ≤ 110.0%
M_d = Dry molecular weight of gas, lb/lb-mole
M_s = Molecular weight of gas, wet basis, lb/lb-mole
M_w = Molecular weight of water, 18.0 lb/lb-mole
m_a = Mass of residue of acetone after evaporation, grams
P_{bar} = Barometric pressure at testing site, inches mercury
P_g = Static pressure of gas, inches mercury (inches water/13.6)
P_s = Absolute pressure of gas, inches mercury = $P_{bar} + P_g$
P_{std} = Standard absolute pressure, 29.92 inches mercury
Q_{acfm} = Actual volumetric gas flow rate, acfm
Q_{sd} = Dry volumetric gas flow rate corrected to standard conditions, dscfh
R = Ideal gas constant, 21.85 inches mercury cubic foot/°R-lb-mole
T_m = Dry gas meter temperature, °R
T_s = Gas temperature, °R
T_{std} = Absolute temperature, 528°R
V_a = Volume of acetone blank, ml
V_{aw} = Volume of acetone used in wash, ml
W_a = Weight of residue in acetone wash, grams
m_n = Total amount of particulate matter collected, grams
V_{1c} = Total volume of liquid collected in impingers and silica gel, ml
V_m = Volume of gas sample as measured by dry gas meter, dcf
$V_{m(std)}$ = Volume of gas sample measured by dry gas meter, corrected to standard conditions, dscf
v_s = Gas velocity, ft/sec
$V_{w(std)}$ = Volume of water vapor in gas sample, corrected to standard conditions, scf
Y = Dry gas meter calibration factor
ΔH = Average pressure differential across the orifice meter, inches water
Δp = Velocity head of gas, inches water
ρ_a = Density of acetone, 0.7855 g/ml (average)
ρ_w = Density of water, 0.002201 lb/ml
θ = Total sampling time, minutes
K_1 = 17.647 °R/in. Hg
K_2 = 0.04707 ft^3/ml
K_4 = 0.09450/100 = 0.000945
K_p = Pitot tube constant, $85.49 \frac{ft}{sec}\left[\frac{(lb/lb-mole)(in.\ Hg)}{(°R)(in.\ H_2O)}\right]^{1/2}$
%EA = Percent excess air
$\%CO_2$ = Percent carbon dioxide by volume, dry basis
$\%O_2$ = Percent oxygen by volume, dry basis
%CO = Percent carbon monoxide by volume, dry basis
$\%N_2$ = Percent nitrogen by volume, dry basis
0.264 = Ratio of O_2 to N_2 in air, v/v
28 = Molecular weight of N_2 or CO
32 = Molecular weight of O_2
44 = Molecular weight of CO_2
13.6 = Specific gravity of mercury (Hg)

MOSTARDI PLATT

Isokinetic Calculation Formulas

1. $V_{w(std)} = V_{lc}\left(\frac{\rho_w}{M_w}\right)\left(\frac{RT_{std}}{P_{std}}\right) = K_2 V_{lc}$

2. $V_{m(std)} = V_m Y \left(\frac{T_{std}}{T_m}\right)\left(\frac{(P_{bar} + (\frac{\Delta H}{13.6}))}{P_{std}}\right) = K_1\ V_m\ Y \frac{(P_{bar} + (\frac{\Delta H}{13.6}))}{T_m}$

3. $B_{ws} = \frac{V_{w(std)}}{(V_{m(std)} + V_{w(std)})}$

4. $M_d = 0.44(\%CO_2) + 0.32(\%O_2) + 0.28(\%N_2)$

5. $M_s = M_d(1 - B_{ws}) + 18.0(B_{ws})$

6. $C_a = \frac{m_a}{V_a \rho_a}$

7. $W_a = C_a V_{aw} \rho_a$

8. $C_{acf} = 15.43 K_i \left(\frac{m_n P_s}{V_{w(std)} + V_{m(std)}\ T_s}\right)$

9. $C_S = (15.43\ \text{grains/gram})(m_n / V_{m(std)})$

10. $v_s = K_p C_p \sqrt{\frac{\Delta P\ T_s}{P_s M_s}}$

11. $Q_{acfm} = v_s A(60_{sec/min})$

12. $Q_{sd} = (3600_{sec/hr})(1 - B_{ws})\, v_s \left(\frac{T_{std} P_s}{T_s P_{std}}\right) A$

13. $E\,(\text{emission rate, lbs/hr}) = Q_{std}(C_s / 7000\ \text{grains/lb})$

14. $IKV = \frac{T_s V_{m(std)} P_{std}}{T_{std} v_s \theta A_n P_s 60(1 - B_{ws})} = K_4 \frac{T_s V_{m(std)}}{P_s v_s A_n \theta (1 - B_{ws})}$

15. $\%EA = \left(\frac{\%O_2 - (0.5\,\%CO)}{0.264\,\%N_2 - (\%O_2 - 0.5\,\%CO)}\right) \times 100$

MOSTARDI PLATT

Trace Metal (Including Mercury) Sample Calculations

Concentration

$$\frac{\mu g}{m^3} = \frac{\mu g\ of\ trace\ metal}{dscf\ volume\ sampled \times 0.02832 \frac{m^3}{ft^3}}$$

Emission Rate

$$\frac{\mu g\ of\ sample \times \frac{1 \times 10^{-6} grams}{\mu g}}{453.6\ gr/lb} = lbs\ of\ trace\ metal$$

$$\frac{lbs\ of\ trace\ metal}{V_m(std)sample} \times dscfm \times 60 \frac{min}{hr} = lbs\ of\ trace\ metal/hr$$

MOSTARDI PLATT

Moisture Calculations

$$V_{wc(std)} = \frac{(V_f - V_i)\rho_w R T_{std}}{P_{std} M_w} = 0.04707(V_f - V_i)$$

$$V_{wsg(std)} = \frac{(W_f - W_i)\rho_w R T_{std}}{P_{std} M_w} = 0.04715(W_f - W_i)$$

$$V_{m(std)} = 17.64\, V_m Y \frac{P_{bar} + \frac{\Delta H}{13.6}}{T_m}$$

$$B_{ws} = \frac{V_{wc(std)} + V_{wsg(std)}}{V_{wc(std)} + V_{wsg(std)} + V_{m(std)}}$$

Where:

B_{ws} = Water vapor in gas stream, proportion by volume
M_w = Molecular weight of water, 18.015 lb/lb-mole
P_{bar} = Barometric pressure at the testing site, in. Hg
P_{std} = Standard absolute pressure, 29.92 in. Hg
R = Ideal gas constant, 0.048137 (in. Hg)(ft^3)/(g-mole)(°R) = [21.8348(in. Hg)(ft^3)/(lb-mole)(°R)]/453.592 g-mole/lb-mole
T_m = Absolute average dry gas meter temperature, °R
T_{std} = Standard absolute temperature, 528 °R
V_f = Final volume of condenser water, ml
V_i = Initial volume of condenser water, ml
V_m = Dry gas volume measured by dry gas meter, dcf
$V_{m(std)}$ = Dry gas volume measured by dry gas meter, corrected to standard conditions, scf
$V_{wc(std)}$ = Volume of condensed water vapor, corrected to standard conditions, scf
$V_{wsg(std)}$ = Volume of water vapor collected in silica gel, corrected to standard conditions, scf
W_f = Final weight of silica gel, g
W_i = Initial weight of silica gel, g
Y = Dry gas meter calibration factor
ΔH = Average pressure exerted on dry gas meter outlet by gas sample bag, in. H_2O
ρ_w = Density of water, 0.9982 g/ml
13.6 = Specific gravity of mercury (Hg)
17.64 = T_{std}/P_{std}
0.04707 = ft^3/ml 0.04715 = ft^3/g

Appendix D - Laboratory Sample Analysis

Maxxam
A Bureau Veritas Group Company

Your Project #: M154005
Site Location: ROCKFORD

Attention:Data Reporting

Mostardi Platt
888 Industrial Rd
Elmhurst, IL
USA 60126-1121

Report Date: 2015/10/29
Report #: R3738352
Version: 1 - Final

CERTIFICATE OF ANALYSIS

MAXXAM JOB #: B5L0981
Received: 2015/10/16, 14:00

Sample Matrix: Stack Sampling Train
Samples Received: 27

Analyses	Quantity	Date Extracted	Date Analyzed	Laboratory Method	Reference
Metals B.H. in H2O2/HNO3 Imp.(6020A)	25	2015/10/27	2015/10/27	BRL SOP-00103 / BRL SOP-00102	EPA M29/CARB 436 m
Metals F.H. in Filter + Rinses (6020A)	26	2015/10/28	2015/10/28	BRL SOP-00103/ BRL SOP-00102	EPA M29/CARB 436 m
Metals in Liquid by ICP/MS (6020A)	1	2015/10/27	2015/10/27	BRL SOP-00103	EPA 3010A/6020A m

Reference Method suffix "m" indicates test methods incorporate validated modifications from specific reference methods to improve performance.
* RPDs calculated using raw data. The rounding of final results may result in the apparent difference.

Encryption Key Clayton Johnson
29 Oct 2015 14:40:59 -04:00

Please direct all questions regarding this Certificate of Analysis to your Project Manager.
Clayton Johnson, Project Manager - Air Toxics, Source Evaluation
Email: CJohnson@maxxam.ca
Phone# (905)817-5769

Maxxam has procedures in place to guard against improper use of the electronic signature and have the required "signatories", as per section 5.10.2 of ISO/IEC 17025:2005(E), signing the reports. For Service Group specific validation please refer to the Validation Signature Page.

Maxxam Analytics International Corporation o/a Maxxam Analytics 6740 Campobello Road, Mississauga, Ontario, L5N 2L8 Tel: (905) 817-5700 Toll-Free: 800-563-6266 Fax: (905) 817-5777 www.maxxam.ca

Maxxam Job #: B5L0981
Report Date: 2015/10/29

Mostardi Platt
Client Project #: M154005
Site Location: ROCKFORD

EPA M29 METALS (FRONT & BACK SEPARATE)

Maxxam ID		BEC523		BEC552	BEC552			
Sampling Date				2015/10/06	2015/10/06			
	UNITS	M5/29-BLANK	RDL	M5/29-NW BAGHOUSE-T1	M5/29-NW BAGHOUSE-T1 Lab-Dup	RDL	QC Batch	MDL
Front Half Antimony (Sb)	ug	<0.40	0.40	37.6	38.1	0.80	4248555	0.080
Front Half Arsenic (As)	ug	<0.40	0.40	33.8	33.5	0.80	4248555	0.080
Front Half Barium (Ba)	ug	5.7	3.0	12.9	12.8	6.0	4248555	0.80
Front Half Beryllium (Be)	ug	<0.10	0.10	<0.20	<0.20	0.20	4248555	0.040
Front Half Cadmium (Cd)	ug	<0.10	0.10	0.91	0.86	0.20	4248555	0.040
Front Half Chromium (Cr)	ug	1.33	0.30	11.0	10.5	0.60	4248555	0.10
Front Half Cobalt (Co)	ug	<0.10	0.10	17.7	17.4	0.20	4248555	0.020
Front Half Copper (Cu)	ug	<2.0	2.0	346	339	4.0	4248555	0.20
Front Half Lead (Pb)	ug	0.94	0.20	795	781	0.40	4248555	0.040
Front Half Manganese (Mn)	ug	1.41	0.75	16.7	16.2	1.5	4248555	0.10
Front Half Nickel (Ni)	ug	<0.50	0.50	71.6	70.6	1.0	4248555	0.20
Front Half Selenium (Se)	ug	<1.0	1.0	<2.0	<2.0	2.0	4248555	0.50
Front Half Silver (Ag)	ug	<0.20	0.20	<0.40	<0.40	0.40	4248555	0.040
Front Half Zinc (Zn)	ug	<5.0	5.0	348	344	10	4248555	1.0
Back Half Antimony (Sb)	ug	<0.20	0.20	<0.20	<0.20	0.20	4246778	0.040
Back Half Arsenic (As)	ug	<0.20	0.20	0.57	0.57	0.20	4246778	0.040
Back Half Barium (Ba)	ug	<1.5	1.5	1.8	1.8	1.5	4246778	0.040
Back Half Beryllium (Be)	ug	<0.050	0.050	<0.050	<0.050	0.050	4246778	0.050
Back Half Cadmium (Cd)	ug	0.128	0.050	0.281	0.279	0.050	4246778	0.030
Back Half Chromium (Cr)	ug	0.62	0.15	1.23	1.23	0.15	4246778	0.070
Back Half Cobalt (Co)	ug	<0.050	0.050	0.272	0.273	0.050	4246778	0.010
Back Half Copper (Cu)	ug	<2.0	2.0	3.6	3.5	2.0	4246778	1.6
Back Half Lead (Pb)	ug	0.50	0.10	3.24	3.29	0.10	4246778	0.040
Back Half Manganese (Mn)	ug	0.61	0.25	0.86	0.86	0.25	4246778	0.060
Back Half Nickel (Ni)	ug	0.49	0.25	0.93	0.94	0.25	4246778	0.060
Back Half Selenium (Se)	ug	<0.50	0.50	<0.50	<0.50	0.50	4246778	0.20
Back Half Silver (Ag)	ug	<0.10	0.10	0.33	0.33	0.10	4246778	0.020
Back Half Zinc (Zn)	ug	<2.5	2.5	9.7	9.8	2.5	4246778	0.60

RDL = Reportable Detection Limit
QC Batch = Quality Control Batch
Lab-Dup = Laboratory Initiated Duplicate

Maxxam Analytics International Corporation o/a Maxxam Analytics 6740 Campobello Road, Mississauga, Ontario, L5N 2L8 Tel: (905) 817-5700 Toll-Free: 800-563-6266 Fax: (905) 817-5777 www.maxxam.ca

Maxxam Job #: B5L0981
Report Date: 2015/10/29

Mostardi Platt
Client Project #: M154005
Site Location: ROCKFORD

EPA M29 METALS (FRONT & BACK SEPARATE)

Maxxam ID		BEC553	BEC555		BEC556			
Sampling Date		2015/10/06	2015/10/06		2015/10/06			
	UNITS	M5/29-NW BAGHOUSE-T2	M5/29-NW BAGHOUSE-T3	RDL	M5/29-BAGHOUSE SAND SEPARATOR-T1	RDL	QC Batch	MDL
Front Half Antimony (Sb)	ug	14.4	13.8	0.80	241	2.0	4248555	0.080
Front Half Arsenic (As)	ug	13.0	11.0	0.80	12.0	2.0	4248555	0.080
Front Half Barium (Ba)	ug	9.6	8.8	6.0	113	15	4248555	0.80
Front Half Beryllium (Be)	ug	<0.20	<0.20	0.20	<0.50	0.50	4248555	0.040
Front Half Cadmium (Cd)	ug	0.47	0.56	0.20	10.7	0.50	4248555	0.040
Front Half Chromium (Cr)	ug	5.98	5.58	0.60	73.9	1.5	4248555	0.10
Front Half Cobalt (Co)	ug	6.74	6.25	0.20	57.7	0.50	4248555	0.020
Front Half Copper (Cu)	ug	183	278	4.0	30600	40	4248555	0.20
Front Half Lead (Pb)	ug	408	469	0.40	20900	4.0	4248555	0.040
Front Half Manganese (Mn)	ug	8.7	10.6	1.5	826	3.8	4248555	0.10
Front Half Nickel (Ni)	ug	29.3	28.7	1.0	332	2.5	4248555	0.20
Front Half Selenium (Se)	ug	<2.0	<2.0	2.0	<5.0	5.0	4248555	0.50
Front Half Silver (Ag)	ug	<0.40	<0.40	0.40	11.8	1.0	4248555	0.040
Front Half Zinc (Zn)	ug	169	171	10	8980	25	4248555	1.0
Back Half Antimony (Sb)	ug	<0.20	<0.20	0.20	<0.20	0.20	4246778	0.040
Back Half Arsenic (As)	ug	0.47	0.35	0.20	<0.20	0.20	4246778	0.040
Back Half Barium (Ba)	ug	1.8	<1.5	1.5	2.6	1.5	4246778	0.040
Back Half Beryllium (Be)	ug	<0.050	<0.050	0.050	<0.050	0.050	4246778	0.050
Back Half Cadmium (Cd)	ug	1.28	2.36	0.050	0.275	0.050	4246778	0.030
Back Half Chromium (Cr)	ug	1.05	0.91	0.15	1.80	0.15	4246778	0.070
Back Half Cobalt (Co)	ug	0.185	0.363	0.050	0.264	0.050	4246778	0.010
Back Half Copper (Cu)	ug	3.0	6.3	2.0	2.2	2.0	4246778	1.6
Back Half Lead (Pb)	ug	2.97	2.61	0.10	2.66	0.10	4246778	0.040
Back Half Manganese (Mn)	ug	1.06	1.01	0.25	1.61	0.25	4246778	0.060
Back Half Nickel (Ni)	ug	1.17	1.00	0.25	1.29	0.25	4246778	0.060
Back Half Selenium (Se)	ug	<0.50	<0.50	0.50	0.65	0.50	4246778	0.20
Back Half Silver (Ag)	ug	0.13	<0.10	0.10	0.16	0.10	4246778	0.020
Back Half Zinc (Zn)	ug	4.2	3.8	2.5	11.9	2.5	4246778	0.60

RDL = Reportable Detection Limit
QC Batch = Quality Control Batch

Maxxam Analytics International Corporation o/a Maxxam Analytics 6740 Campobello Road, Mississauga, Ontario, L5N 2L8 Tel: (905) 817-5700 Toll-Free: 800-563-6266 Fax: (905) 817-5777 www.maxxam.ca

Maxxam Job #: B5L0981
Report Date: 2015/10/29

Mostardi Platt
Client Project #: M154005
Site Location: ROCKFORD

EPA M29 METALS (FRONT & BACK SEPARATE)

Maxxam ID		BEC557	BEC558		BEC559	BEC560			
Sampling Date		2015/10/06	2015/10/06		2015/10/06	2015/10/06			
	UNITS	M5/29-BAGHOUSE SAND SEPARATOR-T2	M5/29-BAGHOUSE SAND SEPARATOR-T3	RDL	M5/29-BAGHOUSE GAS COOLER-T1	M5/29-BAGHOUSE GAS COOLER-T2	RDL	QC Batch	MDL
Front Half Antimony (Sb)	ug	219	137	2.0	150	49.2	2.0	4248555	0.080
Front Half Arsenic (As)	ug	11.8	7.3	2.0	18.1	53.4	2.0	4248555	0.080
Front Half Barium (Ba)	ug	109	73	15	57	<15	15	4248555	0.80
Front Half Beryllium (Be)	ug	<0.50	<0.50	0.50	<0.50	<0.50	0.50	4248555	0.040
Front Half Cadmium (Cd)	ug	9.03	7.59	0.50	1.17	1.32	0.50	4248555	0.040
Front Half Chromium (Cr)	ug	53.0	43.4	1.5	47.3	33.7	1.5	4248555	0.10
Front Half Cobalt (Co)	ug	39.8	24.2	0.50	44.6	20.7	0.50	4248555	0.020
Front Half Copper (Cu)	ug	17000	10100	40	1040	225	10	4248555	0.20
Front Half Lead (Pb)	ug	16300	10500	4.0	4270	807	1.0	4248555	0.040
Front Half Manganese (Mn)	ug	582	361	3.8	66.5	18.6	3.8	4248555	0.10
Front Half Nickel (Ni)	ug	229	176	2.5	466	468	2.5	4248555	0.20
Front Half Selenium (Se)	ug	<5.0	<5.0	5.0	<5.0	<5.0	5.0	4248555	0.50
Front Half Silver (Ag)	ug	8.0	9.6	1.0	<1.0	<1.0	1.0	4248555	0.040
Front Half Zinc (Zn)	ug	7740	4910	25	541	137	25	4248555	1.0
Back Half Antimony (Sb)	ug	0.35	<0.20	0.20	<0.20	<0.20	0.20	4246778	0.040
Back Half Arsenic (As)	ug	<0.20	<0.20	0.20	1.02	34.0	0.20	4246778	0.040
Back Half Barium (Ba)	ug	2.2	<1.5	1.5	3.1	1.7	1.5	4246778	0.040
Back Half Beryllium (Be)	ug	<0.050	<0.050	0.050	<0.050	<0.050	0.050	4246778	0.050
Back Half Cadmium (Cd)	ug	0.539	2.49	0.050	0.471	3.02	0.050	4246778	0.030
Back Half Chromium (Cr)	ug	1.00	0.94	0.15	0.87	1.60	0.15	4246778	0.070
Back Half Cobalt (Co)	ug	0.231	0.179	0.050	0.263	0.351	0.050	4246778	0.010
Back Half Copper (Cu)	ug	2.8	5.3	2.0	4.1	6.9	2.0	4246778	1.6
Back Half Lead (Pb)	ug	4.19	2.28	0.10	3.18	5.11	0.10	4246778	0.040
Back Half Manganese (Mn)	ug	1.21	1.01	0.25	1.13	1.29	0.25	4246778	0.060
Back Half Nickel (Ni)	ug	1.33	0.95	0.25	0.95	2.07	0.25	4246778	0.060
Back Half Selenium (Se)	ug	12.7	<0.50	0.50	0.72	<0.50	0.50	4246778	0.20
Back Half Silver (Ag)	ug	0.12	<0.10	0.10	0.10	<0.10	0.10	4246778	0.020
Back Half Zinc (Zn)	ug	22.4	3.1	2.5	6.9	21.3	2.5	4246778	0.60

RDL = Reportable Detection Limit
QC Batch = Quality Control Batch

Maxxam Analytics International Corporation o/a Maxxam Analytics 6740 Campobello Road, Mississauga, Ontario, L5N 2L8 Tel: (905) 817-5700 Toll-Free: 800-563-6266 Fax: (905) 817-5777 www.maxxam.ca

Maxxam
A Bureau Veritas Group Company

Maxxam Job #: B5L0981
Report Date: 2015/10/29

Mostardi Platt
Client Project #: M154005
Site Location: ROCKFORD

EPA M29 METALS (FRONT & BACK SEPARATE)

Maxxam ID		BEC561	BEC562	BEC565	BEC566	BEC567			
Sampling Date		2015/10/06	2015/10/07	2015/10/07	2015/10/07	2015/10/07			
	UNITS	M5/29-BAGHOUSE GAS COOLER-T3	M5/29-BLUE BAGHOUSE-T1	M5/29-BLUE BAGHOUSE-T2	M5/29-BLUE BAGHOUSE-T3	M5/29-BLUE BAGHOUSE-T4	RDL	QC Batch	MDL
Front Half Antimony (Sb)	ug	33.0	5.95	1.67	1.46	0.98	0.80	4248555	0.080
Front Half Arsenic (As)	ug	20.5	4.09	1.00	<0.80	<0.80	0.80	4248555	0.080
Front Half Barium (Ba)	ug	17.9	10.5	10.4	10.4	8.0	6.0	4248555	0.80
Front Half Beryllium (Be)	ug	<0.20	<0.20	<0.20	<0.20	<0.20	0.20	4248555	0.040
Front Half Cadmium (Cd)	ug	0.48	0.31	1.69	0.91	<0.20	0.20	4248555	0.040
Front Half Chromium (Cr)	ug	20.5	8.30	7.65	6.69	3.85	0.60	4248555	0.10
Front Half Cobalt (Co)	ug	10.9	4.28	2.17	2.12	1.33	0.20	4248555	0.020
Front Half Copper (Cu)	ug	150	263	158	155	81.9	4.0	4248555	0.20
Front Half Lead (Pb)	ug	531	234	55.8	41.2	33.9	0.40	4248555	0.040
Front Half Manganese (Mn)	ug	12.9	22.8	10.6	10.8	6.8	1.5	4248555	0.10
Front Half Nickel (Ni)	ug	202	56.7	60.9	49.4	23.8	1.0	4248555	0.20
Front Half Selenium (Se)	ug	<2.0	<2.0	<2.0	<2.0	<2.0	2.0	4248555	0.50
Front Half Silver (Ag)	ug	<0.40	<0.40	0.42	0.83	1.24	0.40	4248555	0.040
Front Half Zinc (Zn)	ug	107	234	99	91	58	10	4248555	1.0
Back Half Antimony (Sb)	ug	<0.20	0.31	<0.20	<0.20	<0.20	0.20	4246778	0.040
Back Half Arsenic (As)	ug	1.37	<0.20	<0.20	<0.20	<0.20	0.20	4246778	0.040
Back Half Barium (Ba)	ug	3.0	1.7	1.6	<1.5	1.8	1.5	4246778	0.040
Back Half Beryllium (Be)	ug	<0.050	<0.050	<0.050	<0.050	<0.050	0.050	4246778	0.050
Back Half Cadmium (Cd)	ug	2.81	0.344	0.123	0.315	0.057	0.050	4246778	0.030
Back Half Chromium (Cr)	ug	1.16	1.23	1.43	1.02	2.31	0.15	4246778	0.070
Back Half Cobalt (Co)	ug	0.884	0.593	0.696	0.668	0.522	0.050	4246778	0.010
Back Half Copper (Cu)	ug	7.8	4.6	11.3	3.8	3.4	2.0	4246778	1.6
Back Half Lead (Pb)	ug	7.15	5.31	4.99	4.20	5.55	0.10	4246778	0.040
Back Half Manganese (Mn)	ug	1.13	1.59	1.36	1.09	1.44	0.25	4246778	0.060
Back Half Nickel (Ni)	ug	1.44	1.88	1.52	1.76	3.07	0.25	4246778	0.060
Back Half Selenium (Se)	ug	1.05	2.54	<0.50	0.91	<0.50	0.50	4246778	0.20
Back Half Silver (Ag)	ug	<0.10	0.49	<0.10	<0.10	<0.10	0.10	4246778	0.020
Back Half Zinc (Zn)	ug	3.6	8.8	4.0	4.6	<2.5	2.5	4246778	0.60

RDL = Reportable Detection Limit
QC Batch = Quality Control Batch

Maxxam Analytics International Corporation o/a Maxxam Analytics 6740 Campobello Road, Mississauga, Ontario, L5N 2L8 Tel: (905) 817-5700 Toll-Free: 800-563-6266 Fax: (905) 817-5777 www.maxxam.ca

Maxxam Job #: B5L0981
Report Date: 2015/10/29

Mostardi Platt
Client Project #: M154005
Site Location: ROCKFORD

EPA M29 METALS (FRONT & BACK SEPARATE)

Maxxam ID		BEC572	BEC573	BEC574		BEC575			
Sampling Date		2015/10/07	2015/10/07	2015/10/07		2015/10/07			
	UNITS	M5/29-BAGHO USE SWEECO-T1	M5/29-BAGHO USE SWEECO-T2	M5/29-BAGHO USE SWEECO-T3	RDL	M5/29-BAGHO USE SWEECO-T4	RDL	QC Batch	MDL
Front Half Antimony (Sb)	ug	6.8	8.1	6.5	2.0	8.0	4.0	4248555	0.080
Front Half Arsenic (As)	ug	<2.0	<2.0	<2.0	2.0	<4.0	4.0	4248555	0.080
Front Half Barium (Ba)	ug	63	33	41	15	36	30	4248555	0.80
Front Half Beryllium (Be)	ug	<0.50	<0.50	<0.50	0.50	<1.0	1.0	4248555	0.040
Front Half Cadmium (Cd)	ug	2.96	0.54	0.78	0.50	<1.0	1.0	4248555	0.040
Front Half Chromium (Cr)	ug	10.0	8.4	10.1	1.5	10.4	3.0	4248555	0.10
Front Half Cobalt (Co)	ug	4.28	6.86	6.57	0.50	5.6	1.0	4248555	0.020
Front Half Copper (Cu)	ug	604	2510	2340	10	2180	20	4248555	0.20
Front Half Lead (Pb)	ug	333	607	540	1.0	620	2.0	4248555	0.040
Front Half Manganese (Mn)	ug	29.5	51.1	81.7	3.8	69.1	7.5	4248555	0.10
Front Half Nickel (Ni)	ug	48.8	38.6	59.7	2.5	48.7	5.0	4248555	0.20
Front Half Selenium (Se)	ug	<5.0	<5.0	<5.0	5.0	<10	10	4248555	0.50
Front Half Silver (Ag)	ug	<1.0	1.9	4.1	1.0	7.2	2.0	4248555	0.040
Front Half Zinc (Zn)	ug	530	912	797	25	890	50	4248555	1.0
Back Half Antimony (Sb)	ug	0.31	<0.20	<0.20	0.20	<0.20	0.20	4246778	0.040
Back Half Arsenic (As)	ug	<0.20	<0.20	<0.20	0.20	<0.20	0.20	4246778	0.040
Back Half Barium (Ba)	ug	2.0	2.1	<1.5	1.5	<1.5	1.5	4246778	0.040
Back Half Beryllium (Be)	ug	<0.050	<0.050	<0.050	0.050	<0.050	0.050	4246778	0.050
Back Half Cadmium (Cd)	ug	0.444	0.255	0.120	0.050	0.332	0.050	4246778	0.030
Back Half Chromium (Cr)	ug	9.43	6.54	7.91	0.15	8.30	0.15	4246778	0.070
Back Half Cobalt (Co)	ug	0.878	0.660	0.339	0.050	1.11	0.050	4246778	0.010
Back Half Copper (Cu)	ug	10.0	19.7	6.0	2.0	18.1	2.0	4246778	1.6
Back Half Lead (Pb)	ug	7.35	7.12	3.90	0.10	8.41	0.10	4246778	0.040
Back Half Manganese (Mn)	ug	3.05	2.42	1.49	0.25	1.80	0.25	4246778	0.060
Back Half Nickel (Ni)	ug	16.5	8.34	5.51	0.25	5.12	0.25	4246778	0.060
Back Half Selenium (Se)	ug	<0.50	<0.50	<0.50	0.50	<0.50	0.50	4246778	0.20
Back Half Silver (Ag)	ug	0.24	0.11	0.16	0.10	<0.10	0.10	4246778	0.020
Back Half Zinc (Zn)	ug	11.9	12.4	3.4	2.5	6.6	2.5	4246778	0.60

RDL = Reportable Detection Limit
QC Batch = Quality Control Batch

Maxxam Analytics International Corporation o/a Maxxam Analytics 6740 Campobello Road, Mississauga, Ontario, L5N 2L8 Tel: (905) 817-5700 Toll-Free: 800-563-6266 Fax: (905) 817-5777 www.maxxam.ca

Maxxam Job #: B5L0981
Report Date: 2015/10/29

Mostardi Platt
Client Project #: M154005
Site Location: ROCKFORD

EPA M29 METALS (FRONT & BACK SEPARATE)

Maxxam ID		BEC576	BEC577		BEC578	BEC578			
Sampling Date		2015/10/07	2015/10/07		2015/10/07	2015/10/07			
	UNITS	M5/29-BAGHOUSE INLET-T1	M5/29-BAGHOUSE INLET-T2	QC Batch	M5/29-BAGHOUSE INLET-T3	M5/29-BAGHOUSE INLET-T3 Lab-Dup	RDL	QC Batch	MDL
Front Half Antimony (Sb)	ug	72.3	9.9	4248555	107	107	2.0	4248561	0.080
Front Half Arsenic (As)	ug	17.6	7.5	4248555	8.1	8.0	2.0	4248561	0.080
Front Half Barium (Ba)	ug	<15	<15	4248555	17	17	15	4248561	0.80
Front Half Beryllium (Be)	ug	<0.50	<0.50	4248555	<0.50	<0.50	0.50	4248561	0.040
Front Half Cadmium (Cd)	ug	1.61	1.17	4248555	2.91	3.05	0.50	4248561	0.040
Front Half Chromium (Cr)	ug	9.2	4.5	4248555	4.7	4.9	1.5	4248561	0.10
Front Half Cobalt (Co)	ug	3.30	1.08	4248555	2.25	2.19	0.50	4248561	0.020
Front Half Copper (Cu)	ug	215	77	4248555	173	174	10	4248561	0.20
Front Half Lead (Pb)	ug	1780	769	4248555	1480	1480	1.0	4248561	0.040
Front Half Manganese (Mn)	ug	12.3	5.2	4248555	7.2	7.2	3.8	4248561	0.10
Front Half Nickel (Ni)	ug	31.7	11.8	4248555	17.7	18.1	2.5	4248561	0.20
Front Half Selenium (Se)	ug	<5.0	<5.0	4248555	<5.0	<5.0	5.0	4248561	0.50
Front Half Silver (Ag)	ug	<1.0	<1.0	4248555	<1.0	<1.0	1.0	4248561	0.040
Front Half Zinc (Zn)	ug	174	58	4248555	99	98	25	4248561	1.0
Back Half Antimony (Sb)	ug	<0.20	0.21	4246778	3.35	3.30	0.20	4246784	0.040
Back Half Arsenic (As)	ug	1.69	0.29	4246778	1.08	1.08	0.20	4246784	0.040
Back Half Barium (Ba)	ug	1.7	3.3	4246778	1.9	1.8	1.5	4246784	0.040
Back Half Beryllium (Be)	ug	<0.050	<0.050	4246778	<0.050	<0.050	0.050	4246784	0.050
Back Half Cadmium (Cd)	ug	0.264	0.260	4246778	0.135	0.123	0.050	4246784	0.030
Back Half Chromium (Cr)	ug	20.9	62.3	4246778	16.1	16.0	0.15	4246784	0.070
Back Half Cobalt (Co)	ug	0.642	1.34	4246778	0.585	0.581	0.050	4246784	0.010
Back Half Copper (Cu)	ug	17.6	18.2	4246778	6.9	6.7	2.0	4246784	1.6
Back Half Lead (Pb)	ug	10.9	13.8	4246778	6.21	6.21	0.10	4246784	0.040
Back Half Manganese (Mn)	ug	1.99	2.10	4246778	2.10	2.06	0.25	4246784	0.060
Back Half Nickel (Ni)	ug	12.9	16.4	4246778	6.66	6.51	0.25	4246784	0.060
Back Half Selenium (Se)	ug	0.55	0.71	4246778	0.53	0.53	0.50	4246784	0.20
Back Half Silver (Ag)	ug	0.11	1.15	4246778	0.24	0.24	0.10	4246784	0.020
Back Half Zinc (Zn)	ug	17.2	10.9	4246778	6.2	5.6	2.5	4246784	0.60

RDL = Reportable Detection Limit
QC Batch = Quality Control Batch
Lab-Dup = Laboratory Initiated Duplicate

Maxxam Analytics International Corporation o/a Maxxam Analytics 6740 Campobello Road, Mississauga, Ontario, L5N 2L8 Tel: (905) 817-5700 Toll-Free: 800-563-6266 Fax: (905) 817-5777 www.maxxam.ca

Maxxam Job #: B5L0981
Report Date: 2015/10/29

Mostardi Platt
Client Project #: M154005
Site Location: ROCKFORD

EPA M29 METALS (FRONT & BACK SEPARATE)

Maxxam ID		BEC579		BEC580	BEC581		BEC582			
Sampling Date		2015/10/07		2015/10/07	2015/10/07		2015/10/07			
	UNITS	M5/29-BAGHOUSE INLET-T4	RDL	M5/29-TPU BAGHOUSE INLET-T1	M5/29-TPU BAGHOUSE INLET-T2	RDL	M5/29-TPU BAGHOUSE INLET-T3	RDL	QC Batch	MDL
Front Half Antimony (Sb)	ug	8.4	2.0	30	39	20	<20	20	4248561	0.080
Front Half Arsenic (As)	ug	4.3	2.0	<20	<20	20	<20	20	4248561	0.080
Front Half Barium (Ba)	ug	<15	15	<150	<150	150	<150	150	4248561	0.80
Front Half Beryllium (Be)	ug	<0.50	0.50	<5.0	<5.0	5.0	<5.0	5.0	4248561	0.040
Front Half Cadmium (Cd)	ug	<0.50	0.50	6.5	<5.0	5.0	<5.0	5.0	4248561	0.040
Front Half Chromium (Cr)	ug	3.2	1.5	4370	2840	15	1710	15	4248561	0.10
Front Half Cobalt (Co)	ug	0.66	0.50	737	1450	5.0	897	5.0	4248561	0.020
Front Half Copper (Cu)	ug	77	10	66300	149000	100	481000 (1)	500	4248561	0.20
Front Half Lead (Pb)	ug	1660	1.0	2930	1850	10	1860	10	4248561	0.040
Front Half Manganese (Mn)	ug	<3.8	3.8	8860	3590	38	635	38	4248561	0.10
Front Half Nickel (Ni)	ug	10.1	2.5	46600	29900	25	21300	25	4248561	0.20
Front Half Selenium (Se)	ug	<5.0	5.0	<50	<50	50	<50	50	4248561	0.50
Front Half Silver (Ag)	ug	<1.0	1.0	<10	<10	10	18	10	4248561	0.040
Front Half Zinc (Zn)	ug	51	25	103000	29200	250	4380	250	4248561	1.0
Back Half Antimony (Sb)	ug	0.37	0.20	5.38	1.75	0.20	7.16	0.20	4246784	0.040
Back Half Arsenic (As)	ug	0.26	0.20	0.26	<0.20	0.20	0.36	0.20	4246784	0.040
Back Half Barium (Ba)	ug	3.3	1.5	<1.5	<1.5	1.5	3.8	1.5	4246784	0.040
Back Half Beryllium (Be)	ug	<0.050	0.050	<0.050	<0.050	0.050	<0.050	0.050	4246784	0.050
Back Half Cadmium (Cd)	ug	0.236	0.050	0.173	0.080	0.050	0.105	0.050	4246784	0.030
Back Half Chromium (Cr)	ug	7.76	0.15	1.68	1.35	0.15	2.23	0.15	4246784	0.070
Back Half Cobalt (Co)	ug	0.683	0.050	3.23	1.58	0.050	9.46	0.050	4246784	0.010
Back Half Copper (Cu)	ug	7.2	2.0	16.3	8.1	2.0	28.1	2.0	4246784	1.6
Back Half Lead (Pb)	ug	7.71	0.10	293	82.4	0.10	537	0.10	4246784	0.040
Back Half Manganese (Mn)	ug	2.03	0.25	1.22	1.25	0.25	3.46	0.25	4246784	0.060
Back Half Nickel (Ni)	ug	4.28	0.25	4.93	8.61	0.25	7.98	0.25	4246784	0.060
Back Half Selenium (Se)	ug	<0.50	0.50	8.92	52.5	0.50	1.20	0.50	4246784	0.20
Back Half Silver (Ag)	ug	0.16	0.10	<0.10	<0.10	0.10	<0.10	0.10	4246784	0.020
Back Half Zinc (Zn)	ug	4.2	2.5	17.7	19.5	2.5	11.8	2.5	4246784	0.60

RDL = Reportable Detection Limit
QC Batch = Quality Control Batch
(1) Extra 250x dilution reported

Maxxam Analytics International Corporation o/a Maxxam Analytics 6740 Campobello Road, Mississauga, Ontario, L5N 2L8 Tel: (905) 817-5700 Toll-Free: 800-563-6266 Fax: (905) 817-5777 www.maxxam.ca

Maxxam Job #: B5L0981
Report Date: 2015/10/29

Mostardi Platt
Client Project #: M154005
Site Location: ROCKFORD

ELEMENTS BY ICP/MS (STACK SAMPLING TRAIN)

Maxxam ID		BEC632	BEC640			
Sampling Date						
	UNITS	AUDIT-092915O-1425	AUDIT-092915O-1426	RDL	QC Batch	MDL
Total Antimony (Sb)	ug/mL	N/A	1.78	0.010	4247327	N/A
Total Arsenic (As)	ug/mL	N/A	0.902	0.010	4247327	N/A
Total Barium (Ba)	ug/mL	N/A	1.10	0.060	4247327	N/A
Total Beryllium (Be)	ug/mL	N/A	1.45	0.0020	4247327	N/A
Total Cadmium (Cd)	ug/mL	N/A	1.17	0.0020	4247327	N/A
Total Chromium (Cr)	ug/mL	N/A	2.51	0.0050	4247327	N/A
Total Cobalt (Co)	ug/mL	N/A	1.96	0.0020	4247327	N/A
Total Copper (Cu)	ug/mL	N/A	1.29	0.010	4247327	N/A
Total Lead (Pb)	ug/mL	N/A	0.719	0.0050	4247327	N/A
Total Manganese (Mn)	ug/mL	N/A	0.343	0.010	4247327	N/A
Total Nickel (Ni)	ug/mL	N/A	0.372	0.010	4247327	N/A
Total Selenium (Se)	ug/mL	N/A	1.81	0.020	4247327	N/A
Total Silver (Ag)	ug/mL	N/A	0.878	0.0050	4247327	N/A
Total Zinc (Zn)	ug/mL	N/A	1.74	0.050	4247327	N/A
Front Half Antimony (Sb)	ug	32.2	N/A	0.40	4248561	0.080
Front Half Arsenic (As)	ug	26.4	N/A	0.40	4248561	0.080
Front Half Barium (Ba)	ug	31.4	N/A	3.0	4248561	0.80
Front Half Beryllium (Be)	ug	12.5	N/A	0.10	4248561	0.040
Front Half Cadmium (Cd)	ug	13.2	N/A	0.10	4248561	0.040
Front Half Chromium (Cr)	ug	21.0	N/A	0.30	4248561	0.10
Front Half Cobalt (Co)	ug	14.6	N/A	0.10	4248561	0.020
Front Half Copper (Cu)	ug	14.2	N/A	2.0	4248561	0.20
Front Half Lead (Pb)	ug	27.4	N/A	0.20	4248561	0.040
Front Half Manganese (Mn)	ug	14.5	N/A	0.75	4248561	0.10
Front Half Nickel (Ni)	ug	27.1	N/A	0.50	4248561	0.20
Front Half Selenium (Se)	ug	26.9	N/A	1.0	4248561	0.50
Front Half Silver (Ag)	ug	40.8	N/A	0.20	4248561	0.040
Front Half Zinc (Zn)	ug	29.0	N/A	5.0	4248561	1.0

RDL = Reportable Detection Limit
QC Batch = Quality Control Batch
N/A = Not Applicable

Maxxam Analytics International Corporation o/a Maxxam Analytics 6740 Campobello Road, Mississauga, Ontario, L5N 2L8 Tel: (905) 817-5700 Toll-Free: 800-563-6266 Fax: (905) 817-5777 www.maxxam.ca

Maxxam Job #: B5L0981
Report Date: 2015/10/29

Mostardi Platt
Client Project #: M154005
Site Location: ROCKFORD

TEST SUMMARY

Maxxam ID: BEC523
Sample ID: M5/29-BLANK
Matrix: Stack Sampling Train

Collected:
Shipped:
Received: 2015/10/16

Test Description	Instrumentation	Batch	Extracted	Date Analyzed	Analyst
Metals B.H. in H2O2/HNO3 Imp.(6020A)	ICP1/MS	4246778	2015/10/27	2015/10/27	Nan Raykha
Metals F.H. in Filter + Rinses (6020A)	ICP1/MS	4248555	2015/10/28	2015/10/28	Nan Raykha

Maxxam ID: BEC552
Sample ID: M5/29-NW BAGHOUSE-T1
Matrix: Stack Sampling Train

Collected: 2015/10/06
Shipped:
Received: 2015/10/16

Test Description	Instrumentation	Batch	Extracted	Date Analyzed	Analyst
Metals B.H. in H2O2/HNO3 Imp.(6020A)	ICP1/MS	4246778	2015/10/27	2015/10/27	Nan Raykha
Metals F.H. in Filter + Rinses (6020A)	ICP1/MS	4248555	2015/10/28	2015/10/28	Nan Raykha

Maxxam ID: BEC552 Dup
Sample ID: M5/29-NW BAGHOUSE-T1
Matrix: Stack Sampling Train

Collected: 2015/10/06
Shipped:
Received: 2015/10/16

Test Description	Instrumentation	Batch	Extracted	Date Analyzed	Analyst
Metals B.H. in H2O2/HNO3 Imp.(6020A)	ICP1/MS	4246778	2015/10/27	2015/10/27	Nan Raykha
Metals F.H. in Filter + Rinses (6020A)	ICP1/MS	4248555	2015/10/29	2015/10/28	Nan Raykha

Maxxam ID: BEC553
Sample ID: M5/29-NW BAGHOUSE-T2
Matrix: Stack Sampling Train

Collected: 2015/10/06
Shipped:
Received: 2015/10/16

Test Description	Instrumentation	Batch	Extracted	Date Analyzed	Analyst
Metals B.H. in H2O2/HNO3 Imp.(6020A)	ICP1/MS	4246778	2015/10/27	2015/10/27	Nan Raykha
Metals F.H. in Filter + Rinses (6020A)	ICP1/MS	4248555	2015/10/28	2015/10/28	Nan Raykha

Maxxam ID: BEC555
Sample ID: M5/29-NW BAGHOUSE-T3
Matrix: Stack Sampling Train

Collected: 2015/10/06
Shipped:
Received: 2015/10/16

Test Description	Instrumentation	Batch	Extracted	Date Analyzed	Analyst
Metals B.H. in H2O2/HNO3 Imp.(6020A)	ICP1/MS	4246778	2015/10/27	2015/10/27	Nan Raykha
Metals F.H. in Filter + Rinses (6020A)	ICP1/MS	4248555	2015/10/28	2015/10/28	Nan Raykha

Maxxam ID: BEC556
Sample ID: M5/29-BAGHOUSE SAND SEPARATOR-T1
Matrix: Stack Sampling Train

Collected: 2015/10/06
Shipped:
Received: 2015/10/16

Test Description	Instrumentation	Batch	Extracted	Date Analyzed	Analyst
Metals B.H. in H2O2/HNO3 Imp.(6020A)	ICP1/MS	4246778	2015/10/27	2015/10/27	Nan Raykha
Metals F.H. in Filter + Rinses (6020A)	ICP1/MS	4248555	2015/10/28	2015/10/28	Nan Raykha

Maxxam Analytics International Corporation o/a Maxxam Analytics 6740 Campobello Road, Mississauga, Ontario, L5N 2L8 Tel: (905) 817-5700 Toll-Free: 800-563-6266 Fax: (905) 817-5777 www.maxxam.ca

Maxxam Job #: B5L0981
Report Date: 2015/10/29

Mostardi Platt
Client Project #: M154005
Site Location: ROCKFORD

TEST SUMMARY

Maxxam ID: BEC557
Sample ID: M5/29-BAGHOUSE SAND SEPARATOR-T2
Matrix: Stack Sampling Train

Collected: 2015/10/06
Shipped:
Received: 2015/10/16

Test Description	Instrumentation	Batch	Extracted	Date Analyzed	Analyst
Metals B.H. in H2O2/HNO3 Imp.(6020A)	ICP1/MS	4246778	2015/10/27	2015/10/27	Nan Raykha
Metals F.H. in Filter + Rinses (6020A)	ICP1/MS	4248555	2015/10/28	2015/10/28	Nan Raykha

Maxxam ID: BEC558
Sample ID: M5/29-BAGHOUSE SAND SEPARATOR-T3
Matrix: Stack Sampling Train

Collected: 2015/10/06
Shipped:
Received: 2015/10/16

Test Description	Instrumentation	Batch	Extracted	Date Analyzed	Analyst
Metals B.H. in H2O2/HNO3 Imp.(6020A)	ICP1/MS	4246778	2015/10/27	2015/10/27	Nan Raykha
Metals F.H. in Filter + Rinses (6020A)	ICP1/MS	4248555	2015/10/28	2015/10/28	Nan Raykha

Maxxam ID: BEC559
Sample ID: M5/29-BAGHOUSE GAS COOLER-T1
Matrix: Stack Sampling Train

Collected: 2015/10/06
Shipped:
Received: 2015/10/16

Test Description	Instrumentation	Batch	Extracted	Date Analyzed	Analyst
Metals B.H. in H2O2/HNO3 Imp.(6020A)	ICP1/MS	4246778	2015/10/27	2015/10/27	Nan Raykha
Metals F.H. in Filter + Rinses (6020A)	ICP1/MS	4248555	2015/10/28	2015/10/28	Nan Raykha

Maxxam ID: BEC560
Sample ID: M5/29-BAGHOUSE GAS COOLER-T2
Matrix: Stack Sampling Train

Collected: 2015/10/06
Shipped:
Received: 2015/10/16

Test Description	Instrumentation	Batch	Extracted	Date Analyzed	Analyst
Metals B.H. in H2O2/HNO3 Imp.(6020A)	ICP1/MS	4246778	2015/10/27	2015/10/27	Nan Raykha
Metals F.H. in Filter + Rinses (6020A)	ICP1/MS	4248555	2015/10/28	2015/10/28	Nan Raykha

Maxxam ID: BEC561
Sample ID: M5/29-BAGHOUSE GAS COOLER-T3
Matrix: Stack Sampling Train

Collected: 2015/10/06
Shipped:
Received: 2015/10/16

Test Description	Instrumentation	Batch	Extracted	Date Analyzed	Analyst
Metals B.H. in H2O2/HNO3 Imp.(6020A)	ICP1/MS	4246778	2015/10/27	2015/10/27	Nan Raykha
Metals F.H. in Filter + Rinses (6020A)	ICP1/MS	4248555	2015/10/28	2015/10/28	Nan Raykha

Maxxam ID: BEC562
Sample ID: M5/29-BLUE BAGHOUSE-T1
Matrix: Stack Sampling Train

Collected: 2015/10/07
Shipped:
Received: 2015/10/16

Test Description	Instrumentation	Batch	Extracted	Date Analyzed	Analyst
Metals B.H. in H2O2/HNO3 Imp.(6020A)	ICP1/MS	4246778	2015/10/27	2015/10/27	Nan Raykha
Metals F.H. in Filter + Rinses (6020A)	ICP1/MS	4248555	2015/10/28	2015/10/28	Nan Raykha

Maxxam Analytics International Corporation o/a Maxxam Analytics 6740 Campobello Road, Mississauga, Ontario, L5N 2L8 Tel: (905) 817-5700 Toll-Free: 800-563-6266 Fax: (905) 817-5777 www.maxxam.ca

Maxxam Job #: B5L0981
Report Date: 2015/10/29

Mostardi Platt
Client Project #: M154005
Site Location: ROCKFORD

TEST SUMMARY

Maxxam ID: BEC565
Sample ID: M5/29-BLUE BAGHOUSE-T2
Matrix: Stack Sampling Train

Collected: 2015/10/07
Shipped:
Received: 2015/10/16

Test Description	Instrumentation	Batch	Extracted	Date Analyzed	Analyst
Metals B.H. in H2O2/HNO3 Imp.(6020A)	ICP1/MS	4246778	2015/10/27	2015/10/27	Nan Raykha
Metals F.H. in Filter + Rinses (6020A)	ICP1/MS	4248555	2015/10/28	2015/10/28	Nan Raykha

Maxxam ID: BEC566
Sample ID: M5/29-BLUE BAGHOUSE-T3
Matrix: Stack Sampling Train

Collected: 2015/10/07
Shipped:
Received: 2015/10/16

Test Description	Instrumentation	Batch	Extracted	Date Analyzed	Analyst
Metals B.H. in H2O2/HNO3 Imp.(6020A)	ICP1/MS	4246778	2015/10/27	2015/10/27	Nan Raykha
Metals F.H. in Filter + Rinses (6020A)	ICP1/MS	4248555	2015/10/28	2015/10/28	Nan Raykha

Maxxam ID: BEC567
Sample ID: M5/29-BLUE BAGHOUSE-T4
Matrix: Stack Sampling Train

Collected: 2015/10/07
Shipped:
Received: 2015/10/16

Test Description	Instrumentation	Batch	Extracted	Date Analyzed	Analyst
Metals B.H. in H2O2/HNO3 Imp.(6020A)	ICP1/MS	4246778	2015/10/27	2015/10/27	Nan Raykha
Metals F.H. in Filter + Rinses (6020A)	ICP1/MS	4248555	2015/10/28	2015/10/28	Nan Raykha

Maxxam ID: BEC572
Sample ID: M5/29-BAGHOUSE SWEECO-T1
Matrix: Stack Sampling Train

Collected: 2015/10/07
Shipped:
Received: 2015/10/16

Test Description	Instrumentation	Batch	Extracted	Date Analyzed	Analyst
Metals B.H. in H2O2/HNO3 Imp.(6020A)	ICP1/MS	4246778	2015/10/27	2015/10/27	Nan Raykha
Metals F.H. in Filter + Rinses (6020A)	ICP1/MS	4248555	2015/10/28	2015/10/28	Nan Raykha

Maxxam ID: BEC573
Sample ID: M5/29-BAGHOUSE SWEECO-T2
Matrix: Stack Sampling Train

Collected: 2015/10/07
Shipped:
Received: 2015/10/16

Test Description	Instrumentation	Batch	Extracted	Date Analyzed	Analyst
Metals B.H. in H2O2/HNO3 Imp.(6020A)	ICP1/MS	4246778	2015/10/27	2015/10/27	Nan Raykha
Metals F.H. in Filter + Rinses (6020A)	ICP1/MS	4248555	2015/10/28	2015/10/28	Nan Raykha

Maxxam ID: BEC574
Sample ID: M5/29-BAGHOUSE SWEECO-T3
Matrix: Stack Sampling Train

Collected: 2015/10/07
Shipped:
Received: 2015/10/16

Test Description	Instrumentation	Batch	Extracted	Date Analyzed	Analyst
Metals B.H. in H2O2/HNO3 Imp.(6020A)	ICP1/MS	4246778	2015/10/27	2015/10/27	Nan Raykha
Metals F.H. in Filter + Rinses (6020A)	ICP1/MS	4248555	2015/10/28	2015/10/28	Nan Raykha

Maxxam Analytics International Corporation o/a Maxxam Analytics 6740 Campobello Road, Mississauga, Ontario, L5N 2L8 Tel: (905) 817-5700 Toll-Free: 800-563-6266 Fax: (905) 817-5777 www.maxxam.ca

Maxxam Job #: B5L0981
Report Date: 2015/10/29

Mostardi Platt
Client Project #: M154005
Site Location: ROCKFORD

TEST SUMMARY

Maxxam ID: BEC575
Sample ID: M5/29-BAGHOUSE SWEECO-T4
Matrix: Stack Sampling Train

Collected: 2015/10/07
Shipped:
Received: 2015/10/16

Test Description	Instrumentation	Batch	Extracted	Date Analyzed	Analyst
Metals B.H. in H2O2/HNO3 Imp.(6020A)	ICP1/MS	4246778	2015/10/27	2015/10/27	Nan Raykha
Metals F.H. in Filter + Rinses (6020A)	ICP1/MS	4248555	2015/10/28	2015/10/28	Nan Raykha

Maxxam ID: BEC576
Sample ID: M5/29-BAGHOUSE INLET-T1
Matrix: Stack Sampling Train

Collected: 2015/10/07
Shipped:
Received: 2015/10/16

Test Description	Instrumentation	Batch	Extracted	Date Analyzed	Analyst
Metals B.H. in H2O2/HNO3 Imp.(6020A)	ICP1/MS	4246778	2015/10/27	2015/10/27	Nan Raykha
Metals F.H. in Filter + Rinses (6020A)	ICP1/MS	4248555	2015/10/28	2015/10/28	Nan Raykha

Maxxam ID: BEC577
Sample ID: M5/29-BAGHOUSE INLET-T2
Matrix: Stack Sampling Train

Collected: 2015/10/07
Shipped:
Received: 2015/10/16

Test Description	Instrumentation	Batch	Extracted	Date Analyzed	Analyst
Metals B.H. in H2O2/HNO3 Imp.(6020A)	ICP1/MS	4246778	2015/10/27	2015/10/27	Nan Raykha
Metals F.H. in Filter + Rinses (6020A)	ICP1/MS	4248555	2015/10/28	2015/10/28	Nan Raykha

Maxxam ID: BEC578
Sample ID: M5/29-BAGHOUSE INLET-T3
Matrix: Stack Sampling Train

Collected: 2015/10/07
Shipped:
Received: 2015/10/16

Test Description	Instrumentation	Batch	Extracted	Date Analyzed	Analyst
Metals B.H. in H2O2/HNO3 Imp.(6020A)	ICP1/MS	4246784	2015/10/27	2015/10/27	Nan Raykha
Metals F.H. in Filter + Rinses (6020A)	ICP1/MS	4248561	2015/10/28	2015/10/28	Nan Raykha

Maxxam ID: BEC578 Dup
Sample ID: M5/29-BAGHOUSE INLET-T3
Matrix: Stack Sampling Train

Collected: 2015/10/07
Shipped:
Received: 2015/10/16

Test Description	Instrumentation	Batch	Extracted	Date Analyzed	Analyst
Metals B.H. in H2O2/HNO3 Imp.(6020A)	ICP1/MS	4246784	2015/10/27	2015/10/27	Nan Raykha
Metals F.H. in Filter + Rinses (6020A)	ICP1/MS	4248561	2015/10/28	2015/10/28	Nan Raykha

Maxxam ID: BEC579
Sample ID: M5/29-BAGHOUSE INLET-T4
Matrix: Stack Sampling Train

Collected: 2015/10/07
Shipped:
Received: 2015/10/16

Test Description	Instrumentation	Batch	Extracted	Date Analyzed	Analyst
Metals B.H. in H2O2/HNO3 Imp.(6020A)	ICP1/MS	4246784	2015/10/27	2015/10/27	Nan Raykha
Metals F.H. in Filter + Rinses (6020A)	ICP1/MS	4248561	2015/10/28	2015/10/28	Nan Raykha

Maxxam Analytics International Corporation o/a Maxxam Analytics 6740 Campobello Road, Mississauga, Ontario, L5N 2L8 Tel: (905) 817-5700 Toll-Free: 800-563-6266 Fax: (905) 817-5777 www.maxxam.ca

Maxxam Job #: B5L0981
Report Date: 2015/10/29

Mostardi Platt
Client Project #: M154005
Site Location: ROCKFORD

TEST SUMMARY

Maxxam ID: BEC580
Sample ID: M5/29-TPU BAGHOUSE INLET-T1
Matrix: Stack Sampling Train

Collected: 2015/10/07
Shipped:
Received: 2015/10/16

Test Description	Instrumentation	Batch	Extracted	Date Analyzed	Analyst
Metals B.H. in H2O2/HNO3 Imp.(6020A)	ICP1/MS	4246784	2015/10/27	2015/10/27	Nan Raykha
Metals F.H. in Filter + Rinses (6020A)	ICP1/MS	4248561	2015/10/28	2015/10/28	Nan Raykha

Maxxam ID: BEC581
Sample ID: M5/29-TPU BAGHOUSE INLET-T2
Matrix: Stack Sampling Train

Collected: 2015/10/07
Shipped:
Received: 2015/10/16

Test Description	Instrumentation	Batch	Extracted	Date Analyzed	Analyst
Metals B.H. in H2O2/HNO3 Imp.(6020A)	ICP1/MS	4246784	2015/10/27	2015/10/27	Nan Raykha
Metals F.H. in Filter + Rinses (6020A)	ICP1/MS	4248561	2015/10/28	2015/10/28	Nan Raykha

Maxxam ID: BEC582
Sample ID: M5/29-TPU BAGHOUSE INLET-T3
Matrix: Stack Sampling Train

Collected: 2015/10/07
Shipped:
Received: 2015/10/16

Test Description	Instrumentation	Batch	Extracted	Date Analyzed	Analyst
Metals B.H. in H2O2/HNO3 Imp.(6020A)	ICP1/MS	4246784	2015/10/27	2015/10/27	Nan Raykha
Metals F.H. in Filter + Rinses (6020A)	ICP1/MS	4248561	2015/10/28	2015/10/28	Nan Raykha

Maxxam ID: BEC632
Sample ID: AUDIT-092915O-1425
Matrix: Stack Sampling Train

Collected:
Shipped:
Received: 2015/10/16

Test Description	Instrumentation	Batch	Extracted	Date Analyzed	Analyst
Metals F.H. in Filter + Rinses (6020A)	ICP1/MS	4248561	2015/10/28	2015/10/28	Nan Raykha

Maxxam ID: BEC640
Sample ID: AUDIT-092915O-1426
Matrix: Stack Sampling Train

Collected:
Shipped:
Received: 2015/10/16

Test Description	Instrumentation	Batch	Extracted	Date Analyzed	Analyst
Metals in Liquid by ICP/MS (6020A)	ICP1/MS	4247327	2015/10/27	2015/10/27	Nan Raykha

Maxxam Analytics International Corporation o/a Maxxam Analytics 6740 Campobello Road, Mississauga, Ontario, L5N 2L8 Tel: (905) 817-5700 Toll-Free: 800-563-6266 Fax: (905) 817-5777 www.maxxam.ca

Maxxam Job #: B5L0981
Report Date: 2015/10/29

Mostardi Platt
Client Project #: M154005
Site Location: ROCKFORD

GENERAL COMMENTS

Sample BEC556-01 : Extra 20x dilution was reported for Cu and Pb for this sample.

Sample BEC557-01 : Extra 20x dilution was reported for Cu and Pb for this sample.

Sample BEC558-01 : Extra 20x dilution was reported for Cu and Pb for this sample.

EPA M29 METALS (FRONT & BACK SEPARATE)

Metals F.H. in Filter + Rinses (6020A): Extra 2x, 5x or 10x dilution was required for all samples except BEC523, due to the matrix and high levels.
Post digestion duplicate and spike were done on sample BEC552.
Trace level Ba was observed in the Processed Blank.
Metals B.H. in H2O2/HNO3 Imp.(6020A): Post digestion duplicate and spike were done on sample BEC552.
Sample digests for BEC560, BEC575 and BEC577 were reanalyzed on 2015-10-28 to confirm data.
Metals F.H. in Filter + Rinses (6020A): Extra 5x or 50x dilution was required for all samples due to the matrix and high levels.
Post digestion duplicate and spike were done on sample BEC578.
Trace level Zn and Ba were observed in the Processed Blank.
Metals B.H. in H2O2/HNO3 Imp.(6020A): Post digestion duplicate and spike were done on sample BEC578.
Sample digests for BEC580 and BEC581 were reanalyzed on 2015-10-28 to confirm data.

ELEMENTS BY ICP/MS (STACK SAMPLING TRAIN)

Metals F.H. in Filter + Rinses (6020A): Extra 5x or 50x dilution was required for all samples due to the matrix and high levels.
Post digestion duplicate and spike were done on sample BEC578.
Trace level Zn and Ba were observed in the Processed Blank.

Results relate only to the items tested.

Maxxam Analytics International Corporation o/a Maxxam Analytics 6740 Campobello Road, Mississauga, Ontario, L5N 2L8 Tel: (905) 817-5700 Toll-Free: 800-563-6266 Fax: (905) 817-5777 www.maxxam.ca

Maxxam
A Bureau Veritas Group Company

Maxxam Job #: B5L0981
Report Date: 2015/10/29

Mostardi Platt
Client Project #: M154005
Site Location: ROCKFORD

QUALITY ASSURANCE REPORT

QA/QC Batch	Init	QC Type	Parameter	Date Analyzed	Value	% Recovery	UNITS	QC Limits
4246778	N_R	Matrix Spike(BEC552)	Back Half Antimony (Sb)	2015/10/27		96	%	70 - 130
			Back Half Arsenic (As)	2015/10/27		95	%	70 - 130
			Back Half Barium (Ba)	2015/10/27		99	%	70 - 130
			Back Half Beryllium (Be)	2015/10/27		97	%	70 - 130
			Back Half Cadmium (Cd)	2015/10/27		94	%	70 - 130
			Back Half Chromium (Cr)	2015/10/27		98	%	70 - 130
			Back Half Cobalt (Co)	2015/10/27		98	%	70 - 130
			Back Half Copper (Cu)	2015/10/27		97	%	70 - 130
			Back Half Lead (Pb)	2015/10/27		98	%	70 - 130
			Back Half Manganese (Mn)	2015/10/27		97	%	70 - 130
			Back Half Nickel (Ni)	2015/10/27		98	%	70 - 130
			Back Half Selenium (Se)	2015/10/27		90	%	70 - 130
			Back Half Silver (Ag)	2015/10/27		99	%	70 - 130
			Back Half Zinc (Zn)	2015/10/27		93	%	70 - 130
4246778	N_R	Matrix Spike DUP(BEC552)	Back Half Antimony (Sb)	2015/10/27		96	%	70 - 130
			Back Half Arsenic (As)	2015/10/27		94	%	70 - 130
			Back Half Barium (Ba)	2015/10/27		99	%	70 - 130
			Back Half Beryllium (Be)	2015/10/27		96	%	70 - 130
			Back Half Cadmium (Cd)	2015/10/27		95	%	70 - 130
			Back Half Chromium (Cr)	2015/10/27		99	%	70 - 130
			Back Half Cobalt (Co)	2015/10/27		100	%	70 - 130
			Back Half Copper (Cu)	2015/10/27		98	%	70 - 130
			Back Half Lead (Pb)	2015/10/27		97	%	70 - 130
			Back Half Manganese (Mn)	2015/10/27		98	%	70 - 130
			Back Half Nickel (Ni)	2015/10/27		99	%	70 - 130
			Back Half Selenium (Se)	2015/10/27		91	%	70 - 130
			Back Half Silver (Ag)	2015/10/27		100	%	70 - 130
			Back Half Zinc (Zn)	2015/10/27		92	%	70 - 130
4246778	N_R	MS/MSD RPD	Back Half Antimony (Sb)	2015/10/27	0		%	20
			Back Half Arsenic (As)	2015/10/27	1.1		%	20
			Back Half Barium (Ba)	2015/10/27	0		%	20
			Back Half Beryllium (Be)	2015/10/27	1.0		%	20
			Back Half Cadmium (Cd)	2015/10/27	1.1		%	20
			Back Half Chromium (Cr)	2015/10/27	1.0		%	20
			Back Half Cobalt (Co)	2015/10/27	2.0		%	20
			Back Half Copper (Cu)	2015/10/27	1.0		%	20
			Back Half Lead (Pb)	2015/10/27	1.0		%	20
			Back Half Manganese (Mn)	2015/10/27	1.0		%	20
			Back Half Nickel (Ni)	2015/10/27	1.0		%	20
			Back Half Selenium (Se)	2015/10/27	1.1		%	20
			Back Half Silver (Ag)	2015/10/27	1.0		%	20
			Back Half Zinc (Zn)	2015/10/27	1.1		%	20
4246778	N_R	Spiked Blank	Back Half Antimony (Sb)	2015/10/27		100	%	85 - 115
			Back Half Arsenic (As)	2015/10/27		98	%	85 - 115
			Back Half Barium (Ba)	2015/10/27		100	%	85 - 115
			Back Half Beryllium (Be)	2015/10/27		98	%	85 - 115
			Back Half Cadmium (Cd)	2015/10/27		97	%	85 - 115
			Back Half Chromium (Cr)	2015/10/27		101	%	85 - 115
			Back Half Cobalt (Co)	2015/10/27		102	%	85 - 115
			Back Half Copper (Cu)	2015/10/27		100	%	85 - 115
			Back Half Lead (Pb)	2015/10/27		100	%	85 - 115
			Back Half Manganese (Mn)	2015/10/27		100	%	85 - 115
			Back Half Nickel (Ni)	2015/10/27		101	%	85 - 115

Maxxam Analytics International Corporation o/a Maxxam Analytics 6740 Campobello Road, Mississauga, Ontario, L5N 2L8 Tel: (905) 817-5700 Toll-Free: 800-563-6266 Fax: (905) 817-5777 www.maxxam.ca

Maxxam Job #: B5L0981
Report Date: 2015/10/29

Mostardi Platt
Client Project #: M154005
Site Location: ROCKFORD

QUALITY ASSURANCE REPORT(CONT'D)

QA/QC Batch	Init	QC Type	Parameter	Date Analyzed	Value	% Recovery	UNITS	QC Limits
4246778	N_R	Spiked Blank DUP	Back Half Selenium (Se)	2015/10/27		94	%	85 - 115
			Back Half Silver (Ag)	2015/10/27		104	%	85 - 115
			Back Half Zinc (Zn)	2015/10/27		96	%	85 - 115
			Back Half Antimony (Sb)	2015/10/27		101	%	85 - 115
			Back Half Arsenic (As)	2015/10/27		99	%	85 - 115
			Back Half Barium (Ba)	2015/10/27		102	%	85 - 115
			Back Half Beryllium (Be)	2015/10/27		98	%	85 - 115
			Back Half Cadmium (Cd)	2015/10/27		99	%	85 - 115
			Back Half Chromium (Cr)	2015/10/27		102	%	85 - 115
			Back Half Cobalt (Co)	2015/10/27		103	%	85 - 115
			Back Half Copper (Cu)	2015/10/27		101	%	85 - 115
			Back Half Lead (Pb)	2015/10/27		103	%	85 - 115
			Back Half Manganese (Mn)	2015/10/27		101	%	85 - 115
			Back Half Nickel (Ni)	2015/10/27		102	%	85 - 115
			Back Half Selenium (Se)	2015/10/27		93	%	85 - 115
			Back Half Silver (Ag)	2015/10/27		104	%	85 - 115
			Back Half Zinc (Zn)	2015/10/27		96	%	85 - 115
4246778	N_R	RPD	Back Half Antimony (Sb)	2015/10/27	1.3		%	20
			Back Half Arsenic (As)	2015/10/27	0.91		%	20
			Back Half Barium (Ba)	2015/10/27	2.1		%	20
			Back Half Beryllium (Be)	2015/10/27	0.50		%	20
			Back Half Cadmium (Cd)	2015/10/27	1.6		%	20
			Back Half Chromium (Cr)	2015/10/27	1.0		%	20
			Back Half Cobalt (Co)	2015/10/27	0.97		%	20
			Back Half Copper (Cu)	2015/10/27	1.2		%	20
			Back Half Lead (Pb)	2015/10/27	2.6		%	20
			Back Half Manganese (Mn)	2015/10/27	1.2		%	20
			Back Half Nickel (Ni)	2015/10/27	1.4		%	20
			Back Half Selenium (Se)	2015/10/27	0.23		%	20
			Back Half Silver (Ag)	2015/10/27	0.21		%	20
			Back Half Zinc (Zn)	2015/10/27	0.42		%	20
4246778	N_R	Method Blank	Back Half Antimony (Sb)	2015/10/27	<0.20		ug	
			Back Half Arsenic (As)	2015/10/27	<0.20		ug	
			Back Half Barium (Ba)	2015/10/27	<1.5		ug	
			Back Half Beryllium (Be)	2015/10/27	<0.050		ug	
			Back Half Cadmium (Cd)	2015/10/27	<0.050		ug	
			Back Half Chromium (Cr)	2015/10/27	<0.15		ug	
			Back Half Cobalt (Co)	2015/10/27	<0.050		ug	
			Back Half Copper (Cu)	2015/10/27	<2.0		ug	
			Back Half Lead (Pb)	2015/10/27	<0.10		ug	
			Back Half Manganese (Mn)	2015/10/27	<0.25		ug	
			Back Half Nickel (Ni)	2015/10/27	<0.25		ug	
			Back Half Selenium (Se)	2015/10/27	<0.50		ug	
			Back Half Silver (Ag)	2015/10/27	<0.10		ug	
			Back Half Zinc (Zn)	2015/10/27	<2.5		ug	
4246778	N_R	RPD - Sample/Sample Dup	Back Half Antimony (Sb)	2015/10/27	NC		%	20
			Back Half Arsenic (As)	2015/10/27	NC		%	20
			Back Half Barium (Ba)	2015/10/27	NC		%	20
			Back Half Beryllium (Be)	2015/10/27	NC		%	20
			Back Half Cadmium (Cd)	2015/10/27	0.54		%	20
			Back Half Chromium (Cr)	2015/10/27	0		%	20
			Back Half Cobalt (Co)	2015/10/27	0.55		%	20
			Back Half Copper (Cu)	2015/10/27	NC		%	20

Maxxam Analytics International Corporation o/a Maxxam Analytics 6740 Campobello Road, Mississauga, Ontario, L5N 2L8 Tel: (905) 817-5700 Toll-Free: 800-563-6266 Fax: (905) 817-5777 www.maxxam.ca

Maxxam Job #: B5L0981
Report Date: 2015/10/29

Mostardi Platt
Client Project #: M154005
Site Location: ROCKFORD

QUALITY ASSURANCE REPORT(CONT'D)

QA/QC Batch	Init	QC Type	Parameter	Date Analyzed	Value	% Recovery	UNITS	QC Limits
			Back Half Lead (Pb)	2015/10/27	1.5		%	20
			Back Half Manganese (Mn)	2015/10/27	NC		%	20
			Back Half Nickel (Ni)	2015/10/27	NC		%	20
			Back Half Selenium (Se)	2015/10/27	NC		%	20
			Back Half Silver (Ag)	2015/10/27	NC		%	20
			Back Half Zinc (Zn)	2015/10/27	NC		%	20
4246784	N_R	Matrix Spike(BEC578)	Back Half Antimony (Sb)	2015/10/27		94	%	70 - 130
			Back Half Arsenic (As)	2015/10/27		90	%	70 - 130
			Back Half Barium (Ba)	2015/10/27		98	%	70 - 130
			Back Half Beryllium (Be)	2015/10/27		90	%	70 - 130
			Back Half Cadmium (Cd)	2015/10/27		91	%	70 - 130
			Back Half Chromium (Cr)	2015/10/27		97	%	70 - 130
			Back Half Cobalt (Co)	2015/10/27		98	%	70 - 130
			Back Half Copper (Cu)	2015/10/27		96	%	70 - 130
			Back Half Lead (Pb)	2015/10/27		96	%	70 - 130
			Back Half Manganese (Mn)	2015/10/27		95	%	70 - 130
			Back Half Nickel (Ni)	2015/10/27		97	%	70 - 130
			Back Half Selenium (Se)	2015/10/27		84	%	70 - 130
			Back Half Silver (Ag)	2015/10/27		97	%	70 - 130
			Back Half Zinc (Zn)	2015/10/27		86	%	70 - 130
4246784	N_R	Matrix Spike DUP(BEC578)	Back Half Antimony (Sb)	2015/10/27		94	%	70 - 130
			Back Half Arsenic (As)	2015/10/27		92	%	70 - 130
			Back Half Barium (Ba)	2015/10/27		99	%	70 - 130
			Back Half Beryllium (Be)	2015/10/27		90	%	70 - 130
			Back Half Cadmium (Cd)	2015/10/27		92	%	70 - 130
			Back Half Chromium (Cr)	2015/10/27		99	%	70 - 130
			Back Half Cobalt (Co)	2015/10/27		100	%	70 - 130
			Back Half Copper (Cu)	2015/10/27		98	%	70 - 130
			Back Half Lead (Pb)	2015/10/27		96	%	70 - 130
			Back Half Manganese (Mn)	2015/10/27		97	%	70 - 130
			Back Half Nickel (Ni)	2015/10/27		99	%	70 - 130
			Back Half Selenium (Se)	2015/10/27		86	%	70 - 130
			Back Half Silver (Ag)	2015/10/27		97	%	70 - 130
			Back Half Zinc (Zn)	2015/10/27		86	%	70 - 130
4246784	N_R	MS/MSD RPD	Back Half Antimony (Sb)	2015/10/27	0		%	20
			Back Half Arsenic (As)	2015/10/27	2.2		%	20
			Back Half Barium (Ba)	2015/10/27	1.0		%	20
			Back Half Beryllium (Be)	2015/10/27	0		%	20
			Back Half Cadmium (Cd)	2015/10/27	1.1		%	20
			Back Half Chromium (Cr)	2015/10/27	2.0		%	20
			Back Half Cobalt (Co)	2015/10/27	2.0		%	20
			Back Half Copper (Cu)	2015/10/27	2.1		%	20
			Back Half Lead (Pb)	2015/10/27	0		%	20
			Back Half Manganese (Mn)	2015/10/27	2.1		%	20
			Back Half Nickel (Ni)	2015/10/27	2.0		%	20
			Back Half Selenium (Se)	2015/10/27	2.4		%	20
			Back Half Silver (Ag)	2015/10/27	0		%	20
			Back Half Zinc (Zn)	2015/10/27	0		%	20
4246784	N_R	Spiked Blank	Back Half Antimony (Sb)	2015/10/27		98	%	85 - 115
			Back Half Arsenic (As)	2015/10/27		97	%	85 - 115
			Back Half Barium (Ba)	2015/10/27		100	%	85 - 115
			Back Half Beryllium (Be)	2015/10/27		97	%	85 - 115
			Back Half Cadmium (Cd)	2015/10/27		96	%	85 - 115

Maxxam Analytics International Corporation o/a Maxxam Analytics 6740 Campobello Road, Mississauga, Ontario, L5N 2L8 Tel: (905) 817-5700 Toll-Free: 800-563-6266 Fax: (905) 817-5777 www.maxxam.ca

Maxxam Job #: B5L0981
Report Date: 2015/10/29

Mostardi Platt
Client Project #: M154005
Site Location: ROCKFORD

QUALITY ASSURANCE REPORT(CONT'D)

QA/QC Batch	Init	QC Type	Parameter	Date Analyzed	Value	% Recovery	UNITS	QC Limits
			Back Half Chromium (Cr)	2015/10/27		100	%	85 - 115
			Back Half Cobalt (Co)	2015/10/27		102	%	85 - 115
			Back Half Copper (Cu)	2015/10/27		100	%	85 - 115
			Back Half Lead (Pb)	2015/10/27		99	%	85 - 115
			Back Half Manganese (Mn)	2015/10/27		98	%	85 - 115
			Back Half Nickel (Ni)	2015/10/27		100	%	85 - 115
			Back Half Selenium (Se)	2015/10/27		92	%	85 - 115
			Back Half Silver (Ag)	2015/10/27		103	%	85 - 115
			Back Half Zinc (Zn)	2015/10/27		94	%	85 - 115
4246784	N_R	Spiked Blank DUP	Back Half Antimony (Sb)	2015/10/27		99	%	85 - 115
			Back Half Arsenic (As)	2015/10/27		99	%	85 - 115
			Back Half Barium (Ba)	2015/10/27		100	%	85 - 115
			Back Half Beryllium (Be)	2015/10/27		99	%	85 - 115
			Back Half Cadmium (Cd)	2015/10/27		98	%	85 - 115
			Back Half Chromium (Cr)	2015/10/27		101	%	85 - 115
			Back Half Cobalt (Co)	2015/10/27		103	%	85 - 115
			Back Half Copper (Cu)	2015/10/27		101	%	85 - 115
			Back Half Lead (Pb)	2015/10/27		102	%	85 - 115
			Back Half Manganese (Mn)	2015/10/27		100	%	85 - 115
			Back Half Nickel (Ni)	2015/10/27		102	%	85 - 115
			Back Half Selenium (Se)	2015/10/27		94	%	85 - 115
			Back Half Silver (Ag)	2015/10/27		102	%	85 - 115
			Back Half Zinc (Zn)	2015/10/27		96	%	85 - 115
4246784	N_R	RPD	Back Half Antimony (Sb)	2015/10/27	0.89		%	20
			Back Half Arsenic (As)	2015/10/27	1.6		%	20
			Back Half Barium (Ba)	2015/10/27	0.74		%	20
			Back Half Beryllium (Be)	2015/10/27	2.1		%	20
			Back Half Cadmium (Cd)	2015/10/27	2.2		%	20
			Back Half Chromium (Cr)	2015/10/27	1.2		%	20
			Back Half Cobalt (Co)	2015/10/27	1.2		%	20
			Back Half Copper (Cu)	2015/10/27	1.1		%	20
			Back Half Lead (Pb)	2015/10/27	3.5		%	20
			Back Half Manganese (Mn)	2015/10/27	2.1		%	20
			Back Half Nickel (Ni)	2015/10/27	1.9		%	20
			Back Half Selenium (Se)	2015/10/27	2.4		%	20
			Back Half Silver (Ag)	2015/10/27	1.2		%	20
			Back Half Zinc (Zn)	2015/10/27	1.6		%	20
4246784	N_R	Method Blank	Back Half Antimony (Sb)	2015/10/27	<0.20		ug	
			Back Half Arsenic (As)	2015/10/27	<0.20		ug	
			Back Half Barium (Ba)	2015/10/27	<1.5		ug	
			Back Half Beryllium (Be)	2015/10/27	<0.050		ug	
			Back Half Cadmium (Cd)	2015/10/27	<0.050		ug	
			Back Half Chromium (Cr)	2015/10/27	<0.15		ug	
			Back Half Cobalt (Co)	2015/10/27	<0.050		ug	
			Back Half Copper (Cu)	2015/10/27	<2.0		ug	
			Back Half Lead (Pb)	2015/10/27	<0.10		ug	
			Back Half Manganese (Mn)	2015/10/27	<0.25		ug	
			Back Half Nickel (Ni)	2015/10/27	<0.25		ug	
			Back Half Selenium (Se)	2015/10/27	<0.50		ug	
			Back Half Silver (Ag)	2015/10/27	<0.10		ug	
			Back Half Zinc (Zn)	2015/10/27	<2.5		ug	
4246784	N_R	RPD - Sample/Sample Dup	Back Half Antimony (Sb)	2015/10/27	1.4		%	20
			Back Half Arsenic (As)	2015/10/27	0.56		%	20

Maxxam Analytics International Corporation o/a Maxxam Analytics 6740 Campobello Road, Mississauga, Ontario, L5N 2L8 Tel: (905) 817-5700 Toll-Free: 800-563-6266 Fax: (905) 817-5777 www.maxxam.ca

Maxxam Job #: B5L0981
Report Date: 2015/10/29

Mostardi Platt
Client Project #: M154005
Site Location: ROCKFORD

QUALITY ASSURANCE REPORT(CONT'D)

QA/QC Batch	Init	QC Type	Parameter	Date Analyzed	Value	% Recovery	UNITS	QC Limits
			Back Half Barium (Ba)	2015/10/27	NC		%	20
			Back Half Beryllium (Be)	2015/10/27	NC		%	20
			Back Half Cadmium (Cd)	2015/10/27	NC		%	20
			Back Half Chromium (Cr)	2015/10/27	0.78		%	20
			Back Half Cobalt (Co)	2015/10/27	0.77		%	20
			Back Half Copper (Cu)	2015/10/27	NC		%	20
			Back Half Lead (Pb)	2015/10/27	0.12		%	20
			Back Half Manganese (Mn)	2015/10/27	1.7		%	20
			Back Half Nickel (Ni)	2015/10/27	2.4		%	20
			Back Half Selenium (Se)	2015/10/27	NC		%	20
			Back Half Silver (Ag)	2015/10/27	NC		%	20
			Back Half Zinc (Zn)	2015/10/27	NC		%	20
4247327	N_R	Spiked Blank	Total Antimony (Sb)	2015/10/27		98	%	85 - 115
			Total Arsenic (As)	2015/10/27		97	%	85 - 115
			Total Barium (Ba)	2015/10/27		100	%	85 - 115
			Total Beryllium (Be)	2015/10/27		97	%	85 - 115
			Total Cadmium (Cd)	2015/10/27		96	%	85 - 115
			Total Chromium (Cr)	2015/10/27		100	%	85 - 115
			Total Cobalt (Co)	2015/10/27		102	%	85 - 115
			Total Copper (Cu)	2015/10/27		100	%	85 - 115
			Total Lead (Pb)	2015/10/27		99	%	85 - 115
			Total Manganese (Mn)	2015/10/27		98	%	85 - 115
			Total Nickel (Ni)	2015/10/27		100	%	85 - 115
			Total Selenium (Se)	2015/10/27		92	%	85 - 115
			Total Silver (Ag)	2015/10/27		103	%	85 - 115
			Total Zinc (Zn)	2015/10/27		94	%	85 - 115
4247327	N_R	Spiked Blank DUP	Total Antimony (Sb)	2015/10/27		99	%	85 - 115
			Total Arsenic (As)	2015/10/27		99	%	85 - 115
			Total Barium (Ba)	2015/10/27		100	%	85 - 115
			Total Beryllium (Be)	2015/10/27		99	%	85 - 115
			Total Cadmium (Cd)	2015/10/27		98	%	85 - 115
			Total Chromium (Cr)	2015/10/27		101	%	85 - 115
			Total Cobalt (Co)	2015/10/27		103	%	85 - 115
			Total Copper (Cu)	2015/10/27		101	%	85 - 115
			Total Lead (Pb)	2015/10/27		102	%	85 - 115
			Total Manganese (Mn)	2015/10/27		100	%	85 - 115
			Total Nickel (Ni)	2015/10/27		102	%	85 - 115
			Total Selenium (Se)	2015/10/27		94	%	85 - 115
			Total Silver (Ag)	2015/10/27		102	%	85 - 115
			Total Zinc (Zn)	2015/10/27		96	%	85 - 115
4247327	N_R	RPD	Total Antimony (Sb)	2015/10/27	0.89		%	20
			Total Arsenic (As)	2015/10/27	1.6		%	20
			Total Barium (Ba)	2015/10/27	0.74		%	20
			Total Beryllium (Be)	2015/10/27	2.1		%	20
			Total Cadmium (Cd)	2015/10/27	2.2		%	20
			Total Chromium (Cr)	2015/10/27	1.2		%	20
			Total Cobalt (Co)	2015/10/27	1.2		%	20
			Total Copper (Cu)	2015/10/27	1.1		%	20
			Total Lead (Pb)	2015/10/27	3.5		%	20
			Total Manganese (Mn)	2015/10/27	2.1		%	20
			Total Nickel (Ni)	2015/10/27	1.9		%	20
			Total Selenium (Se)	2015/10/27	2.4		%	20
			Total Silver (Ag)	2015/10/27	1.2		%	20

Maxxam Analytics International Corporation o/a Maxxam Analytics 6740 Campobello Road, Mississauga, Ontario, L5N 2L8 Tel: (905) 817-5700 Toll-Free: 800-563-6266 Fax: (905) 817-5777 www.maxxam.ca

Maxxam
A Bureau Veritas Group Company

Maxxam Job #: B5L0981
Report Date: 2015/10/29

Mostardi Platt
Client Project #: M154005
Site Location: ROCKFORD

QUALITY ASSURANCE REPORT(CONT'D)

QA/QC Batch	Init	QC Type	Parameter	Date Analyzed	Value	% Recovery	UNITS	QC Limits
			Total Zinc (Zn)	2015/10/27	1.6		%	20
4247327	N_R	Method Blank	Total Antimony (Sb)	2015/10/27	<0.010		ug/mL	
			Total Arsenic (As)	2015/10/27	<0.010		ug/mL	
			Total Barium (Ba)	2015/10/27	<0.060		ug/mL	
			Total Beryllium (Be)	2015/10/27	<0.0020		ug/mL	
			Total Cadmium (Cd)	2015/10/27	<0.0020		ug/mL	
			Total Chromium (Cr)	2015/10/27	<0.0050		ug/mL	
			Total Cobalt (Co)	2015/10/27	<0.0020		ug/mL	
			Total Copper (Cu)	2015/10/27	<0.010		ug/mL	
			Total Lead (Pb)	2015/10/27	<0.0050		ug/mL	
			Total Manganese (Mn)	2015/10/27	<0.010		ug/mL	
			Total Nickel (Ni)	2015/10/27	<0.010		ug/mL	
			Total Selenium (Se)	2015/10/27	<0.020		ug/mL	
			Total Silver (Ag)	2015/10/27	<0.0050		ug/mL	
			Total Zinc (Zn)	2015/10/27	<0.050		ug/mL	
4248555	N_R	Matrix Spike(BEC552)	Front Half Antimony (Sb)	2015/10/28		103	%	70 - 130
			Front Half Arsenic (As)	2015/10/28		96	%	70 - 130
			Front Half Barium (Ba)	2015/10/28		101	%	70 - 130
			Front Half Beryllium (Be)	2015/10/28		96	%	70 - 130
			Front Half Cadmium (Cd)	2015/10/28		100	%	70 - 130
			Front Half Chromium (Cr)	2015/10/28		96	%	70 - 130
			Front Half Cobalt (Co)	2015/10/28		98	%	70 - 130
			Front Half Copper (Cu)	2015/10/28		95	%	70 - 130
			Front Half Lead (Pb)	2015/10/28		94	%	70 - 130
			Front Half Manganese (Mn)	2015/10/28		98	%	70 - 130
			Front Half Nickel (Ni)	2015/10/28		95	%	70 - 130
			Front Half Selenium (Se)	2015/10/28		98	%	70 - 130
			Front Half Silver (Ag)	2015/10/28		100	%	70 - 130
			Front Half Zinc (Zn)	2015/10/28		101	%	70 - 130
4248555	N_R	Matrix Spike DUP(BEC552)	Front Half Antimony (Sb)	2015/10/28		107	%	70 - 130
			Front Half Arsenic (As)	2015/10/28		98	%	70 - 130
			Front Half Barium (Ba)	2015/10/28		102	%	70 - 130
			Front Half Beryllium (Be)	2015/10/28		95	%	70 - 130
			Front Half Cadmium (Cd)	2015/10/28		103	%	70 - 130
			Front Half Chromium (Cr)	2015/10/28		98	%	70 - 130
			Front Half Cobalt (Co)	2015/10/28		100	%	70 - 130
			Front Half Copper (Cu)	2015/10/28		96	%	70 - 130
			Front Half Lead (Pb)	2015/10/28		96	%	70 - 130
			Front Half Manganese (Mn)	2015/10/28		99	%	70 - 130
			Front Half Nickel (Ni)	2015/10/28		98	%	70 - 130
			Front Half Selenium (Se)	2015/10/28		99	%	70 - 130
			Front Half Silver (Ag)	2015/10/28		102	%	70 - 130
			Front Half Zinc (Zn)	2015/10/28		103	%	70 - 130
4248555	N_R	MS/MSD RPD	Front Half Antimony (Sb)	2015/10/28	3.8		%	20
			Front Half Arsenic (As)	2015/10/28	2.1		%	20
			Front Half Barium (Ba)	2015/10/28	0.99		%	20
			Front Half Beryllium (Be)	2015/10/28	1.0		%	20
			Front Half Cadmium (Cd)	2015/10/28	3.0		%	20
			Front Half Chromium (Cr)	2015/10/28	2.1		%	20
			Front Half Cobalt (Co)	2015/10/28	2.0		%	20
			Front Half Copper (Cu)	2015/10/28	1.0		%	20
			Front Half Lead (Pb)	2015/10/28	2.1		%	20
			Front Half Manganese (Mn)	2015/10/28	1.0		%	20

Maxxam Analytics International Corporation o/a Maxxam Analytics 6740 Campobello Road, Mississauga, Ontario, L5N 2L8 Tel: (905) 817-5700 Toll-Free: 800-563-6266 Fax: (905) 817-5777 www.maxxam.ca

Maxxam Job #: B5L0981
Report Date: 2015/10/29

Mostardi Platt
Client Project #: M154005
Site Location: ROCKFORD

QUALITY ASSURANCE REPORT(CONT'D)

QA/QC Batch	Init	QC Type	Parameter	Date Analyzed	Value	% Recovery	UNITS	QC Limits
			Front Half Nickel (Ni)	2015/10/28	3.1		%	20
			Front Half Selenium (Se)	2015/10/28	1.0		%	20
			Front Half Silver (Ag)	2015/10/28	2.0		%	20
			Front Half Zinc (Zn)	2015/10/28	2.0		%	20
4248555	N_R	Spiked Blank	Front Half Antimony (Sb)	2015/10/28		98	%	85 - 115
			Front Half Arsenic (As)	2015/10/28		99	%	85 - 115
			Front Half Barium (Ba)	2015/10/28		97	%	85 - 115
			Front Half Beryllium (Be)	2015/10/28		102	%	85 - 115
			Front Half Cadmium (Cd)	2015/10/28		97	%	85 - 115
			Front Half Chromium (Cr)	2015/10/28		101	%	85 - 115
			Front Half Cobalt (Co)	2015/10/28		104	%	85 - 115
			Front Half Copper (Cu)	2015/10/28		101	%	85 - 115
			Front Half Lead (Pb)	2015/10/28		102	%	85 - 115
			Front Half Manganese (Mn)	2015/10/28		102	%	85 - 115
			Front Half Nickel (Ni)	2015/10/28		102	%	85 - 115
			Front Half Selenium (Se)	2015/10/28		99	%	85 - 115
			Front Half Silver (Ag)	2015/10/28		103	%	85 - 115
			Front Half Zinc (Zn)	2015/10/28		104	%	85 - 115
4248555	N_R	Spiked Blank DUP	Front Half Antimony (Sb)	2015/10/28		99	%	85 - 115
			Front Half Arsenic (As)	2015/10/28		100	%	85 - 115
			Front Half Barium (Ba)	2015/10/28		97	%	85 - 115
			Front Half Beryllium (Be)	2015/10/28		100	%	85 - 115
			Front Half Cadmium (Cd)	2015/10/28		97	%	85 - 115
			Front Half Chromium (Cr)	2015/10/28		100	%	85 - 115
			Front Half Cobalt (Co)	2015/10/28		104	%	85 - 115
			Front Half Copper (Cu)	2015/10/28		101	%	85 - 115
			Front Half Lead (Pb)	2015/10/28		100	%	85 - 115
			Front Half Manganese (Mn)	2015/10/28		101	%	85 - 115
			Front Half Nickel (Ni)	2015/10/28		101	%	85 - 115
			Front Half Selenium (Se)	2015/10/28		98	%	85 - 115
			Front Half Silver (Ag)	2015/10/28		102	%	85 - 115
			Front Half Zinc (Zn)	2015/10/28		104	%	85 - 115
4248555	N_R	RPD	Front Half Antimony (Sb)	2015/10/28	0.70		%	20
			Front Half Arsenic (As)	2015/10/28	0.42		%	20
			Front Half Barium (Ba)	2015/10/28	0.054		%	20
			Front Half Beryllium (Be)	2015/10/28	1.9		%	20
			Front Half Cadmium (Cd)	2015/10/28	0.28		%	20
			Front Half Chromium (Cr)	2015/10/28	0.39		%	20
			Front Half Cobalt (Co)	2015/10/28	0.76		%	20
			Front Half Copper (Cu)	2015/10/28	0.036		%	20
			Front Half Lead (Pb)	2015/10/28	2.0		%	20
			Front Half Manganese (Mn)	2015/10/28	1.5		%	20
			Front Half Nickel (Ni)	2015/10/28	0.79		%	20
			Front Half Selenium (Se)	2015/10/28	0.45		%	20
			Front Half Silver (Ag)	2015/10/28	1.1		%	20
			Front Half Zinc (Zn)	2015/10/28	0.21		%	20
4248555	N_R	Method Blank	Front Half Antimony (Sb)	2015/10/28	<0.40		ug	
			Front Half Arsenic (As)	2015/10/28	<0.40		ug	
			Front Half Barium (Ba)	2015/10/28	3.5, RDL=3.0		ug	
			Front Half Beryllium (Be)	2015/10/28	<0.10		ug	
			Front Half Cadmium (Cd)	2015/10/28	<0.10		ug	
			Front Half Chromium (Cr)	2015/10/28	<0.30		ug	

Maxxam Analytics International Corporation o/a Maxxam Analytics 6740 Campobello Road, Mississauga, Ontario, L5N 2L8 Tel: (905) 817-5700 Toll-Free: 800-563-6266 Fax: (905) 817-5777 www.maxxam.ca

Maxxam Job #: B5L0981
Report Date: 2015/10/29

Mostardi Platt
Client Project #: M154005
Site Location: ROCKFORD

QUALITY ASSURANCE REPORT(CONT'D)

QA/QC Batch	Init	QC Type	Parameter	Date Analyzed	Value	% Recovery	UNITS	QC Limits
			Front Half Cobalt (Co)	2015/10/28	<0.10		ug	
			Front Half Copper (Cu)	2015/10/28	<2.0		ug	
			Front Half Lead (Pb)	2015/10/28	<0.20		ug	
			Front Half Manganese (Mn)	2015/10/28	<0.75		ug	
			Front Half Nickel (Ni)	2015/10/28	<0.50		ug	
			Front Half Selenium (Se)	2015/10/28	<1.0		ug	
			Front Half Silver (Ag)	2015/10/28	<0.20		ug	
			Front Half Zinc (Zn)	2015/10/28	<5.0		ug	
4248555	N_R	RPD - Sample/Sample Dup	Front Half Antimony (Sb)	2015/10/28	1.2		%	20
			Front Half Arsenic (As)	2015/10/28	0.91		%	20
			Front Half Barium (Ba)	2015/10/28	NC		%	20
			Front Half Beryllium (Be)	2015/10/28	NC		%	20
			Front Half Cadmium (Cd)	2015/10/28	NC		%	20
			Front Half Chromium (Cr)	2015/10/28	5.0		%	20
			Front Half Cobalt (Co)	2015/10/28	1.7		%	20
			Front Half Copper (Cu)	2015/10/28	2.0		%	20
			Front Half Lead (Pb)	2015/10/28	1.8		%	20
			Front Half Manganese (Mn)	2015/10/28	3.2		%	20
			Front Half Nickel (Ni)	2015/10/28	1.4		%	20
			Front Half Selenium (Se)	2015/10/28	NC		%	20
			Front Half Silver (Ag)	2015/10/28	NC		%	20
			Front Half Zinc (Zn)	2015/10/28	1.2		%	20
4248561	N_R	Matrix Spike(BEC578)	Front Half Antimony (Sb)	2015/10/28		100	%	70 - 130
			Front Half Arsenic (As)	2015/10/28		97	%	70 - 130
			Front Half Barium (Ba)	2015/10/28		100	%	70 - 130
			Front Half Beryllium (Be)	2015/10/28		96	%	70 - 130
			Front Half Cadmium (Cd)	2015/10/28		98	%	70 - 130
			Front Half Chromium (Cr)	2015/10/28		99	%	70 - 130
			Front Half Cobalt (Co)	2015/10/28		100	%	70 - 130
			Front Half Copper (Cu)	2015/10/28		99	%	70 - 130
			Front Half Lead (Pb)	2015/10/28		99	%	70 - 130
			Front Half Manganese (Mn)	2015/10/28		100	%	70 - 130
			Front Half Nickel (Ni)	2015/10/28		98	%	70 - 130
			Front Half Selenium (Se)	2015/10/28		98	%	70 - 130
			Front Half Silver (Ag)	2015/10/28		98	%	70 - 130
			Front Half Zinc (Zn)	2015/10/28		102	%	70 - 130
4248561	N_R	Matrix Spike DUP(BEC578)	Front Half Antimony (Sb)	2015/10/28		99	%	70 - 130
			Front Half Arsenic (As)	2015/10/28		98	%	70 - 130
			Front Half Barium (Ba)	2015/10/28		100	%	70 - 130
			Front Half Beryllium (Be)	2015/10/28		97	%	70 - 130
			Front Half Cadmium (Cd)	2015/10/28		97	%	70 - 130
			Front Half Chromium (Cr)	2015/10/28		100	%	70 - 130
			Front Half Cobalt (Co)	2015/10/28		101	%	70 - 130
			Front Half Copper (Cu)	2015/10/28		99	%	70 - 130
			Front Half Lead (Pb)	2015/10/28		96	%	70 - 130
			Front Half Manganese (Mn)	2015/10/28		100	%	70 - 130
			Front Half Nickel (Ni)	2015/10/28		100	%	70 - 130
			Front Half Selenium (Se)	2015/10/28		99	%	70 - 130
			Front Half Silver (Ag)	2015/10/28		98	%	70 - 130
			Front Half Zinc (Zn)	2015/10/28		101	%	70 - 130
4248561	N_R	MS/MSD RPD	Front Half Antimony (Sb)	2015/10/28	1.0		%	20
			Front Half Arsenic (As)	2015/10/28	1.0		%	20
			Front Half Barium (Ba)	2015/10/28	0		%	20

Maxxam Analytics International Corporation o/a Maxxam Analytics 6740 Campobello Road, Mississauga, Ontario, L5N 2L8 Tel: (905) 817-5700 Toll-Free: 800-563-6266 Fax: (905) 817-5777 www.maxxam.ca

Maxxam Job #: B5L0981
Report Date: 2015/10/29

Mostardi Platt
Client Project #: M154005
Site Location: ROCKFORD

QUALITY ASSURANCE REPORT(CONT'D)

QA/QC Batch	Init	QC Type	Parameter	Date Analyzed	Value	% Recovery	UNITS	QC Limits
			Front Half Beryllium (Be)	2015/10/28	1.0		%	20
			Front Half Cadmium (Cd)	2015/10/28	1.0		%	20
			Front Half Chromium (Cr)	2015/10/28	1.0		%	20
			Front Half Cobalt (Co)	2015/10/28	1.0		%	20
			Front Half Copper (Cu)	2015/10/28	0		%	20
			Front Half Lead (Pb)	2015/10/28	3.1		%	20
			Front Half Manganese (Mn)	2015/10/28	0		%	20
			Front Half Nickel (Ni)	2015/10/28	2.0		%	20
			Front Half Selenium (Se)	2015/10/28	1.0		%	20
			Front Half Silver (Ag)	2015/10/28	0		%	20
			Front Half Zinc (Zn)	2015/10/28	0.99		%	20
4248561	N_R	Spiked Blank	Front Half Antimony (Sb)	2015/10/28		100	%	85 - 115
			Front Half Arsenic (As)	2015/10/28		100	%	85 - 115
			Front Half Barium (Ba)	2015/10/28		100	%	85 - 115
			Front Half Beryllium (Be)	2015/10/28		96	%	85 - 115
			Front Half Cadmium (Cd)	2015/10/28		97	%	85 - 115
			Front Half Chromium (Cr)	2015/10/28		101	%	85 - 115
			Front Half Cobalt (Co)	2015/10/28		102	%	85 - 115
			Front Half Copper (Cu)	2015/10/28		101	%	85 - 115
			Front Half Lead (Pb)	2015/10/28		102	%	85 - 115
			Front Half Manganese (Mn)	2015/10/28		102	%	85 - 115
			Front Half Nickel (Ni)	2015/10/28		100	%	85 - 115
			Front Half Selenium (Se)	2015/10/28		99	%	85 - 115
			Front Half Silver (Ag)	2015/10/28		101	%	85 - 115
			Front Half Zinc (Zn)	2015/10/28		100	%	85 - 115
4248561	N_R	Spiked Blank DUP	Front Half Antimony (Sb)	2015/10/28		100	%	85 - 115
			Front Half Arsenic (As)	2015/10/28		99	%	85 - 115
			Front Half Barium (Ba)	2015/10/28		99	%	85 - 115
			Front Half Beryllium (Be)	2015/10/28		96	%	85 - 115
			Front Half Cadmium (Cd)	2015/10/28		97	%	85 - 115
			Front Half Chromium (Cr)	2015/10/28		100	%	85 - 115
			Front Half Cobalt (Co)	2015/10/28		101	%	85 - 115
			Front Half Copper (Cu)	2015/10/28		100	%	85 - 115
			Front Half Lead (Pb)	2015/10/28		100	%	85 - 115
			Front Half Manganese (Mn)	2015/10/28		101	%	85 - 115
			Front Half Nickel (Ni)	2015/10/28		99	%	85 - 115
			Front Half Selenium (Se)	2015/10/28		99	%	85 - 115
			Front Half Silver (Ag)	2015/10/28		101	%	85 - 115
			Front Half Zinc (Zn)	2015/10/28		100	%	85 - 115
4248561	N_R	RPD	Front Half Antimony (Sb)	2015/10/28	0.46		%	20
			Front Half Arsenic (As)	2015/10/28	0.52		%	20
			Front Half Barium (Ba)	2015/10/28	0.31		%	20
			Front Half Beryllium (Be)	2015/10/28	0.039		%	20
			Front Half Cadmium (Cd)	2015/10/28	0.15		%	20
			Front Half Chromium (Cr)	2015/10/28	1.5		%	20
			Front Half Cobalt (Co)	2015/10/28	0.80		%	20
			Front Half Copper (Cu)	2015/10/28	0.96		%	20
			Front Half Lead (Pb)	2015/10/28	1.4		%	20
			Front Half Manganese (Mn)	2015/10/28	1.0		%	20
			Front Half Nickel (Ni)	2015/10/28	0.69		%	20
			Front Half Selenium (Se)	2015/10/28	0.40		%	20
			Front Half Silver (Ag)	2015/10/28	0.83		%	20
			Front Half Zinc (Zn)	2015/10/28	0.30		%	20

Maxxam Analytics International Corporation o/a Maxxam Analytics 6740 Campobello Road, Mississauga, Ontario, L5N 2L8 Tel: (905) 817-5700 Toll-Free: 800-563-6266 Fax: (905) 817-5777 www.maxxam.ca

Maxxam Job #: B5L0981
Report Date: 2015/10/29

Mostardi Platt
Client Project #: M154005
Site Location: ROCKFORD

QUALITY ASSURANCE REPORT(CONT'D)

QA/QC Batch	Init	QC Type	Parameter	Date Analyzed	Value	% Recovery	UNITS	QC Limits
4248561	N_R	Method Blank	Front Half Antimony (Sb)	2015/10/28	<0.40		ug	
			Front Half Arsenic (As)	2015/10/28	<0.40		ug	
			Front Half Barium (Ba)	2015/10/28	4.3, RDL=3.0		ug	
			Front Half Beryllium (Be)	2015/10/28	<0.10		ug	
			Front Half Cadmium (Cd)	2015/10/28	<0.10		ug	
			Front Half Chromium (Cr)	2015/10/28	<0.30		ug	
			Front Half Cobalt (Co)	2015/10/28	<0.10		ug	
			Front Half Copper (Cu)	2015/10/28	<2.0		ug	
			Front Half Lead (Pb)	2015/10/28	<0.20		ug	
			Front Half Manganese (Mn)	2015/10/28	<0.75		ug	
			Front Half Nickel (Ni)	2015/10/28	<0.50		ug	
			Front Half Selenium (Se)	2015/10/28	<1.0		ug	
			Front Half Silver (Ag)	2015/10/28	<0.20		ug	
			Front Half Zinc (Zn)	2015/10/28	6.3, RDL=5.0		ug	
4248561	N_R	RPD - Sample/Sample Dup	Front Half Antimony (Sb)	2015/10/28	0.80		%	20
			Front Half Arsenic (As)	2015/10/28	NC		%	20
			Front Half Barium (Ba)	2015/10/28	NC		%	20
			Front Half Beryllium (Be)	2015/10/28	NC		%	20
			Front Half Cadmium (Cd)	2015/10/28	4.5		%	20
			Front Half Chromium (Cr)	2015/10/28	NC		%	20
			Front Half Cobalt (Co)	2015/10/28	NC		%	20
			Front Half Copper (Cu)	2015/10/28	0.92		%	20
			Front Half Lead (Pb)	2015/10/28	0.30		%	20
			Front Half Manganese (Mn)	2015/10/28	NC		%	20
			Front Half Nickel (Ni)	2015/10/28	2.3		%	20
			Front Half Selenium (Se)	2015/10/28	NC		%	20
			Front Half Silver (Ag)	2015/10/28	NC		%	20
			Front Half Zinc (Zn)	2015/10/28	NC		%	20

Duplicate: Paired analysis of a separate portion of the same sample. Used to evaluate the variance in the measurement.

Matrix Spike: A sample to which a known amount of the analyte of interest has been added. Used to evaluate sample matrix interference.

Spiked Blank: A blank matrix sample to which a known amount of the analyte, usually from a second source, has been added. Used to evaluate method accuracy.

Method Blank: A blank matrix containing all reagents used in the analytical procedure. Used to identify laboratory contamination.

NC (Duplicate RPD): The duplicate RPD was not calculated. The concentration in the sample and/or duplicate was too low to permit a reliable RPD calculation (one or both samples < 5x RDL).

Maxxam Analytics International Corporation o/a Maxxam Analytics 6740 Campobello Road, Mississauga, Ontario, L5N 2L8 Tel: (905) 817-5700 Toll-Free: 800-563-6266 Fax: (905) 817-5777 www.maxxam.ca

Maxxam Job #: B5L0981
Report Date: 2015/10/29

Mostardi Platt
Client Project #: M154005
Site Location: ROCKFORD

VALIDATION SIGNATURE PAGE

The analytical data and all QC contained in this report were reviewed and validated by the following individual(s).

Ralph Siebert, Operations Manager - Inorganic Analyses

Maxxam has procedures in place to guard against improper use of the electronic signature and have the required "signatories", as per section 5.10.2 of ISO/IEC 17025:2005(E), signing the reports. For Service Group specific validation please refer to the Validation Signature Page.

Maxxam Analytics International Corporation o/a Maxxam Analytics 6740 Campobello Road, Mississauga, Ontario, L5N 2L8 Tel: (905) 817-5700 Toll-Free: 800-563-6266 Fax: (905) 817-5777 www.maxxam.ca

ERA
A Waters Company

October 30, 2015

Jenna Ghanma
Mostardi Platt
888 Industrial Drive
Elmhurst, IL 60123

Enclosed is your final report for ERA's Stationary Source Audit Sample (SSAS) Program. Your final report includes an evaluation of all results submitted by your laboratory to ERA.

Data Evaluation Protocols: All analytes in ERA's SSAS Program have been evaluated comparing the reported result to the acceptance limits generated using the criteria contained in the TNI SSAS Table.

For any "Not Acceptable" results, please contact your state regulator for any corrective action requirements.

Thank you for your participation in ERA's SSAS Program. If you have any questions, please contact our Proficiency Testing Department at 1-800-372-0122.

Sincerely,

David Kilhefner
Quality Officer

cc: Project File Number 092915O

ERA
A Waters Company

Recipient Type	Report Recipient	Contact	Project ID
Agency	IL-EPA Region 5 (SSAS) 77 W Jackson Blvd AE-17J Chicago, IL 60604 USA	Dakota Prentice prentice.dakota@epa.gov Phone: 312-886-6761	
Facility	Behr Iron And Metal 1100 Seminary St Rockford, IL 61104 USA	John Pinion jpinion@rka-inc.com Phone: 630-393-9000	
Lab	Maxxam Analytics Inc 6740 Campobello Rd Mississauga, ON L5N 2L8 Canada	Clayton Johnson Sr. Project Manager cjohnson@maxxam.ca Phone: (905) 817-5769	
Tester	Mostardi Platt 888 Industrial Drive Elmhurst, IL 60123 USA	Jenna Ghanma jghanma@mp-mail.com Phone: 630-993-2685	Behr M154005

ACCREDITED

Project # : 092915O

092915O Laboratory Exception Report

A Waters Company

Clayton Johnson
Sr. Project Manager
Maxxam Analytics Inc
6740 Campobello Rd
Mississauga, ON L5N 2L8
(905) 817-5769

EPA ID: **Not Reported**
ERA Customer Number: **M748564**

Evaluation Checks

There are no values reported with < where the assigned value was greater than 0.

Not Acceptable Evaluations

There were no Not Acceptable evaluations for this study.

16341 Table Mountain Pkwy • Golden, CO 80403 • 800.372.0122 • 303.431.8454 • fax 303.421.0159 • www.eraqc.com

ERA

A Waters Company

Final Report Results For Laboratory
Maxxam Analytics Inc

ERA
A Waters Company

SSAP Evaluation Report

Project Number: **092915O**

ERA Customer Number: **M748564**

Laboratory Name: **Maxxam Analytics Inc**

Inorganic Results

16341 Table Mountain Pkwy • Golden, CO 80403 • 800.372.0122 • 303.431.8454 • fax 303.421.0159 • www.eraqc.com

092915O Evaluation Final Complete Report

ERA
A Waters Company

Clayton Johnson
Sr. Project Manager
Maxxam Analytics Inc
6740 Campobello Rd
Mississauga, ON L5N 2L8
(905) 817-5769

EPA ID: **Not Reported**
ERA Customer Number: **M748564**

TNI Analyte Code	Analyte	Units	Reported Value	Assigned Value	Acceptance Limits	Performance Evaluation	Method Description	Analysis Date	Analyst Name
SSAP Metals on Filter Paper (cat# 1425, lot# 092915O) Study Dates: 09/29/15 - 10/30/15									
1005	Antimony	µg/Filter	32.2	31.9	23.9 - 39.9	Acceptable	EPA Method 29 2000	10/28/2015	
1010	Arsenic	µg/Filter	26.4	27.3	20.5 - 34.1	Acceptable	EPA Method 29 2000	10/28/2015	
1015	Barium	µg/Filter	31.4	27.2	20.4 - 34.0	Acceptable	EPA Method 29 2000	10/28/2015	
1020	Beryllium	µg/Filter	12.5	13.6	10.2 - 17.0	Acceptable	EPA Method 29 2000	10/28/2015	
1030	Cadmium	µg/Filter	13.2	13.6	10.9 - 16.3	Acceptable	EPA Method 29 2000	10/28/2015	
1040	Chromium	µg/Filter	21.0	20.4	16.3 - 24.5	Acceptable	EPA Method 29 2000	10/28/2015	
1050	Cobalt	µg/Filter	14.6	13.6	10.2 - 17.0	Acceptable	EPA Method 29 2000	10/28/2015	
1055	Copper	µg/Filter	14.2	13.6	10.2 - 17.0	Acceptable	EPA Method 29 2000	10/28/2015	
1075	Lead	µg/Filter	27.4	27.2	21.8 - 32.6	Acceptable	EPA Method 29 2000	10/28/2015	
1090	Manganese	µg/Filter	14.5	13.6	9.52 - 17.7	Acceptable	EPA Method 29 2000	10/28/2015	
1105	Nickel	µg/Filter	27.1	27.2	19.0 - 35.4	Acceptable	EPA Method 29 2000	10/28/2015	
1140	Selenium	µg/Filter	26.9	27.2	19.0 - 35.4	Acceptable	EPA Method 29 2000	10/28/2015	
1150	Silver	µg/Filter	40.8	40.8	28.6 - 53.0	Acceptable	EPA Method 29 2000	10/28/2015	
1165	Thallium	µg/Filter		40.8	30.6 - 51.0	Not Reported			
1190	Zinc	µg/Filter	29.0	27.2	19.0 - 35.4	Acceptable	EPA Method 29 2000	10/28/2015	

092915O Evaluation Final Complete Report

ERA
A Waters Company

Clayton Johnson
Sr. Project Manager
Maxxam Analytics Inc
6740 Campobello Rd
Mississauga, ON L5N 2L8
(905) 817-5769

EPA ID: **Not Reported**
ERA Customer Number: **M748564**

TNI Analyte Code	Analyte	Units	Reported Value	Assigned Value	Acceptance Limits	Performance Evaluation	Method Description	Analysis Date	Analyst Name
SSAP Metals in Impinger Solution (cat# 1426, lot# 092915O) Study Dates: 09/29/15 - 10/30/15									
1005	Antimony	µg/mL	1.78	1.70	1.28 - 2.12	Acceptable	EPA Method 29 2000	10/27/2015	
1010	Arsenic	µg/mL	0.902	0.895	0.671 - 1.12	Acceptable	EPA Method 29 2000	10/27/2015	
1015	Barium	µg/mL	1.10	1.05	0.788 - 1.31	Acceptable	EPA Method 29 2000	10/27/2015	
1020	Beryllium	µg/mL	1.45	1.35	1.01 - 1.69	Acceptable	EPA Method 29 2000	10/27/2015	
1030	Cadmium	µg/mL	1.17	1.12	0.896 - 1.34	Acceptable	EPA Method 29 2000	10/27/2015	
1040	Chromium	µg/mL	2.51	2.42	1.94 - 2.90	Acceptable	EPA Method 29 2000	10/27/2015	
1050	Cobalt	µg/mL	1.96	1.75	1.31 - 2.19	Acceptable	EPA Method 29 2000	10/27/2015	
1055	Copper	µg/mL	1.29	1.22	0.915 - 1.52	Acceptable	EPA Method 29 2000	10/27/2015	
1075	Lead	µg/mL	0.719	0.695	0.521 - 0.869	Acceptable	EPA Method 29 2000	10/27/2015	
1090	Manganese	µg/mL	0.343	0.326	0.244 - 0.408	Acceptable	EPA Method 29 2000	10/27/2015	
1105	Nickel	µg/mL	0.372	0.357	0.286 - 0.428	Acceptable	EPA Method 29 2000	10/27/2015	
1140	Selenium	µg/mL	1.81	1.80	1.35 - 2.25	Acceptable	EPA Method 29 2000	10/27/2015	
1150	Silver	µg/mL	0.878	0.818	0.614 - 1.02	Acceptable	EPA Method 29 2000	10/27/2015	
1165	Thallium	µg/mL		1.59	1.19 - 1.99	Not Reported			
1190	Zinc	µg/mL	1.74	1.64	1.23 - 2.05	Acceptable	EPA Method 29 2000	10/27/2015	

Client: Rk & Associates, Inc.
Facility: Behr Iron and Metal Rockford Facility
Project Number: M154005
Test Location: Sweeco Separator

Test Method: 5/29
Filterable Analysis Date: 10/14/2015

Filter Drying Temp °F: Ambient-Des. 24 hrs
Analyst: JMG

Description	Sample Date	ID#	vol. (ml)	Initial Weight (grams)	Final Weight (grams)	Net Weight Gain (grams)
Filterable Particulate						
Test No. 1	10/7/2015					
Source Condition: Normal						
M5 Filter		8760		0.4409	0.5095	0.0686
Acetone Wash (Teflon Baggies)		584	40 ml	1.3591	1.3827	0.0236
Acetone Blank						0.0002
Total Front Half Weight						**0.0920**
Filterable Particulate						
Test No. 2	10/7/2015					
Source Condition: Normal						
M5 Filter		8892		0.4477	0.5065	0.0588
Acetone Wash (M5 Pans)		585	60 ml	5.2180	5.2844	0.0664
Acetone Blank						0.0002
Total Front Half Weight						**0.1250**
Filterable Particulate						
Test No. 3	10/7/2015					
Source Condition: Normal						
M5 Filter		8888		0.4468	0.5060	0.0592
Acetone Wash (Teflon Baggies)		586	60 ml	1.3505	1.3945	0.0440
Acetone Blank						0.0002
Total Front Half Weight						**0.1030**
Filterable Particulate						
Test No. 4	10/7/2015					
Source Condition: Normal						
M5 Filter		8890		0.4464	0.5244	0.0780
Acetone Wash (Teflon Baggies)		589	52 ml	1.3575	1.4023	0.0448
Acetone Blank						0.0002
Total Front Half Weight						**0.1226**
Reagent Blank Summary						
Acetone Wash (Teflon Baggies)		569	100 ml	1.3126	1.3130	0.0004

Client: Rk & Associates, Inc.
Facility: Behr Iron and Metal Rockford Facility
Project Number: M154005
Test Location: Lead Pot 2/Lead Pot Dross Drum/Lead Pot 3 (After Cyclone)

Test Method: 5/29
Filterable Analysis Date: 10/14/2015

Filter Drying Temp °F: Ambient-Des. 24 hrs
Analyst: JMG

Description	Sample Date	ID#	vol. (ml)	Initial Weight (grams)	Final Weight (grams)	Net Weight Gain (grams)
Filterable Particulate						
Test No. 1	10/7/2015					
Source Condition: Normal						
M5 Filter		8756		0.4426	0.4521	0.0095
Acetone Wash (Teflon Baggies)		590	48 ml	1.3523	1.3604	0.0081
Acetone Blank						0.0002
Total Front Half Weight						**0.0174**
Filterable Particulate						
Test No. 2	10/7/2015					
Source Condition: Normal						
M5 Filter		8885		0.4486	0.4504	0.0018
Acetone Wash (Teflon Baggies)		563	60 ml	1.3634	1.3644	0.0010
Acetone Blank						0.0002
Total Front Half Weight						**0.0026**
Filterable Particulate						
Test No. 3	10/7/2015					
Source Condition: Normal						
M5 Filter		8734		0.4438	0.4474	0.0036
Acetone Wash (Teflon Baggies)		564	60 ml	1.3332	1.3337	0.0005
Acetone Blank						0.0002
Total Front Half Weight						**0.0039**
Filterable Particulate						
Test No. 4	10/7/2015					
Source Condition: Normal						
M5 Filter		8832		0.4472	0.4489	0.0017
Acetone Wash (Teflon Baggies)		565	58 ml	1.3345	1.3360	0.0015
Acetone Blank						0.0002
Total Front Half Weight						**0.0030**
Reagent Blank Summary						
Acetone Wash (Teflon Baggies)		569	100 ml	1.3126	1.3130	0.0004

Client: Rk & Associates, Inc.
Facility: Behr Iron and Metal Rockford Facility
Project Number: M154005
Test Location: Blue Baghouse Outlet

Test Method: 5/29
Filterable Analysis Date: 10/14/2015

Filter Drying Temp °F: Ambient-Des. 24 hrs
Analyst: JMG

Description	Sample Date	ID#	vol. (ml)	Initial Weight (grams)	Final Weight (grams)	Net Weight Gain (grams)
Filterable Particulate						
Test No. 1	10/7/2015					
Source Condition: Normal						
M5 Filter		8883		0.4495	0.4532	0.0037
Acetone Wash (Teflon Baggies)		580	32 ml	1.3067	1.3099	0.0032
Acetone Blank						0.0001
Total Front Half Weight						**0.0068**
Filterable Particulate						
Test No. 2	10/7/2015					
Source Condition: Normal						
M5 Filter		8886		0.4483	0.4483	0.0000
Acetone Wash (Teflon Baggies)		581	40 ml	1.3134	1.3196	0.0062
Acetone Blank						0.0002
Total Front Half Weight						**0.0060**
Filterable Particulate						
Test No. 3	10/7/2015					
Source Condition: Normal						
M5 Filter		8891		0.4438	0.4438	0.0000
Acetone Wash (Teflon Baggies)		582	42 ml	1.3208	1.3271	0.0063
Acetone Blank						0.0002
Total Front Half Weight						**0.0061**
Filterable Particulate						
Test No. 4	10/7/2015					
Source Condition: Normal						
M5 Filter		8889		0.4487	0.4487	0.0000
Acetone Wash (Teflon Baggies)		583	38 ml	1.3233	1.3293	0.0060
Acetone Blank						0.0002
Total Front Half Weight						**0.0058**
Reagent Blank Summary						
Acetone Wash (Teflon Baggies)		569	100 ml	1.3126	1.3130	0.0004

Appendix E - Reference Method Test Data (Computerized Sheets)

Client:	Rk & Associates, Inc.			
Facility:	Behr Iron and Metal Rockford Facility			
Test Location:	Sweeco Separator			
Project #:	M154005			
Test Method:	5/29			
Test Engineer:	MLIP			
Test Technician:	DJK			
	R1	**R2**	**R3**	**R4**
Temp ID:	CM08	CM08	CM08	CM08
Meter ID:	CM08	CM08	CM08	CM08
Pitot ID:	1037	1037	1037	1037
Nozzle Diameter (Inches):	0.169	0.169	0.169	0.169
Meter Calibration Factor (Y):	0.990	0.990	0.990	0.990
Meter Orifice Setting (Delta H):	1.500	1.500	1.500	1.500
Nozzle Kit ID Number and Material:	Teflon #6	Teflon #6	Teflon #6	Teflon #6
Pitot Tube Coefficient:	0.840			
Probe Length (Feet):	3.0			
Probe Liner Material:	Glass			
Port Length (Inches):	4.00			
Port Size (Diameter, Inches):	6.00			
Port Type:	Nipple			
Duct Shape:	Circular			
Diameter (Feet):	1.3333			
Duct Area (Square Feet):	1.396			
Upstream Diameters:	>.5			
Downstream Diameters:	>2			
Number of Ports Sampled:	2			
Number of Points per Port:	12			
Minutes per Point:	5.0			
Minutes per Reading:	5.0			
Total Number of Traverse Points:	24			
Test Length (Minutes):	120			
Train Type:	Hot Box			
Source Condition:	Normal			
Servomex Serial Number:	01440D1/3935			
Moisture Balance ID:	S10-37			
# of Runs	4			

Client: Rk & Associates, Inc.
Facility: Behr Iron and Metal Rockford Facility
Test Location: Sweeco Separator
Test Method: 5/29

Source Condtion:		Normal Run 1	Normal Run 2	Normal Run 3	Normal Run 4
Identify Analyte:	Antimony (Sb)				
Molecular Weight:	121.75	ADL	DLL	DLL	DLL
ug (net) collected:		7.11	8.30	6.7	8.20
Identify Analyte:	Arsenic (As)				
Molecular Weight:	74.92	BDL	BDL	BDL	BDL
ug (net) collected:		2.2	2.20	2.2	4.20
Identify Analyte:	Beryllium (Be)				
Molecular Weight:	9.01	BDL	BDL	BDL	BDL
ug (net) collected:		0.55	0.55	0.55	1.05
Identify Analyte:	Cadmium (Cd)				
Molecular Weight:	112.4	ADL	ADL	DLL	DLL
ug (net) collected:		3.276	0.667	0.78	1.204
Identify Analyte:	Chromium (Cr)				
Molecular Weight:	51.99	ADL	ADL	ADL	ADL
ug (net) collected:		17.48	12.99	16.06	16.75
Identify Analyte:	Cobalt (Co)				
Molecular Weight:	58.93	ADL	ADL	ADL	ADL
ug (net) collected:		5.158	7.52	6.909	6.71
Identify Analyte:	Copper (Cu)				
Molecular Weight:	63.55	ADL	ADL	ADL	ADL
ug (net) collected:		614	2529.70	2346	2198.10
Identify Analyte:	Lead (Pb)				
Molecular Weight:	207.19	ADL	ADL	ADL	ADL
ug (net) collected:		338.91	612.68	542.46	626.97
Identify Analyte:	Manganese (Mn)				
Molecular Weight:	54.94	ADL	ADL	ADL	ADL
ug (net) collected:		30.53	51.50	81.17	68.88
Identify Analyte:	Nickel (Ni)				
Molecular Weight:	58.71	ADL	ADL	ADL	ADL
ug (net) collected:		64.81	46.45	64.72	53.33
Identify Analyte:	Selenium (Se)				
Molecular Weight:	78.96	BDL	BDL	BDL	BDL
ug (net) collected:		5.5	5.5	5.5	10.50

Client: Rk & Associates, Inc.
Facility: Behr Iron and Metal Rockford Facility
Test Location: Sweeco Separator
Test Method: 5/29

Source Condtion:		Normal Run 1	Normal Run 2	Normal Run 3	Normal Run 4
Identify Analyte:	Silver (Ag)				
Molecular Weight:	107.87	DLL	ADL	ADL	DLL
ug (net) collected:		1.24	2.01	4.26	7.30
Identify Analyte:	Zinc (Zn)				
Molecular Weight:	65.37	ADL	ADL	ADL	ADL
ug (net) collected:		541.9	924.4	800.4	896.60
Identify Analyte:	Barium (Ba)				
Molecular Weight:	137.33	ADL	ADL	DLL	DLL
ug (net) collected:		59.30	29.40	36.80	31.80

Run 1-Method 5/29

Client: Rk & Associates, Inc.
Facility: Behr Iron and Metal Rockford Facility
Test Location: Sweeco Separator
Source Condition: Normal

Date: 10/7/15
Start Time: 8:20
End Time: 10:36

DRY GAS METER CONDITIONS

ΔH:	0.94	in. H_2O
Meter Temperature, Tm:	75.6	°F
Sqrt ΔP:	1.133	in. H_2O
Stack Temperature, Ts:	67.8	°F
Meter Volume, Vm:	72.045	ft^3
Meter Volume, Vmstd:	69.081	dscf
Meter Volume, Vwstd:	0.942	wscf
Isokinetic Variance:	99.5	%I
Test Length	120.00	in mins.
Nozzle Diameter	0.169	in inches
Barometric Pressure	29.33	in Hg
Calculated Fo:	#DIV/0!	

STACK CONDITIONS

Static Pressure	-5.00	in. H_2O
Flue Pressure (Ps):	28.96	in. Hg. abs.
Carbon Dioxide:	0.00	%
Oxygen:	20.90	%
Nitrogen:	79.10	%
Gas Weight dry, Md:	28.836	lb/lb mole
Gas Weight wet, Ms:	28.690	lb/lb mole
Excess Air:	—	%
Gas Velocity, Vs:	64.835	fps
Volumetric Flow:	5,431	acfm
Volumetric Flow:	5,188	dscfm
Volumetric Flow:	5,259	scfm
Fo Validity:	#DIV/0!	

MOISTURE DETERMINATION

Initial Impinger Content:	1943.2	ml	Silica Initial Wt.	817.3	grams
Final Impinger Content:	1948.6	ml	Silica Final Wt.	831.9	grams
Impinger Difference:	5.4	ml	Silica Difference:	14.6	grams

Total Water Gain: 20.0 Moisture, Bws: 0.013 **Supersaturation Value, Bws: 0.024**

Port-Point No.	Clock Time	Velocity Head Δp in. H2O	Orifice ΔH in. H2O	Actual Meter Vol. ft^3	Stack Temp °F	Meter Temp Inlet °F	Meter Temp Outlet °F	Sqrt. Δp	Collected Vol. ft^3	Point Vel ft/sec
1-1	8:20:00	1.50	1.08	778.060	65	61	61	1.225	3.460	70.098
1-2	8:25:00	1.10	0.79	781.520	67	63	61	1.049	2.800	60.028
1-3	8:30:00	1.60	1.16	784.320	66	63	61	1.265	3.510	72.397
1-4	8:35:00	1.80	1.30	787.830	66	67	62	1.342	3.380	76.788
1-5	8:40:00	1.70	1.23	791.210	66	67	62	1.304	3.450	74.625
1-6	8:45:00	1.60	1.16	794.660	66	69	64	1.265	3.350	72.397
1-7	8:50:00	1.40	1.01	798.010	66	70	65	1.183	3.220	67.721
1-8	8:55:00	1.30	0.94	801.230	66	73	66	1.140	2.770	65.258
1-9	9:00:00	1.20	0.87	804.000	66	75	68	1.095	3.110	62.697
1-10	9:05:00	1.10	0.79	807.110	65	77	70	1.049	2.820	60.028
1-11	9:10:00	1.10	0.79	809.930	65	78	71	1.049	2.740	60.028
1-12	9:15:00	1.00	0.72	812.670	65	78	72	1.000	2.278	57.235
	9:20:00			814.948						
2-1	9:36:00	1.50	1.08	814.948	70	80	78	1.225	3.392	70.098
2-2	9:41:00	1.40	1.01	818.340	69	80	78	1.183	3.070	67.721
2-3	9:46:00	1.40	1.01	821.410	69	82	79	1.183	3.280	67.721
2-4	9:51:00	1.40	1.01	824.690	69	83	80	1.183	3.180	67.721
2-5	9:56:00	1.40	1.01	827.870	69	83	80	1.183	3.070	67.721
2-6	10:01:00	1.30	0.94	830.940	70	86	81	1.140	3.030	65.258
2-7	10:06:00	1.30	0.94	833.970	70	86	81	1.140	2.880	65.258
2-8	10:11:00	1.20	0.87	836.850	70	86	82	1.095	2.760	62.697
2-9	10:16:00	0.98	0.72	839.610	70	89	84	0.990	2.830	56.659
2-10	10:21:00	0.95	0.68	842.440	71	90	86	0.975	2.510	55.785
2-11	10:26:00	0.93	0.67	844.950	71	90	86	0.964	2.460	55.195
2-12	10:31:00	0.92	0.66	847.410	71	90	87	0.959	2.695	54.898
	10:36:00			850.105						
Total	2:00:00			72.045		77.8	73.5		72.045	
Average			0.94		67.8	75.6		1.133		
Min			0.66		65.0	61.0		0.959		
Max			1.30		71.0	90.0		1.342		

Run 2-Method 5/29

Client: Rk & Associates, Inc.
Facility: Behr Iron and Metal Rockford Facility
Test Location: Sweeco Separator
Source Condition: Normal

Date: 10/7/15
Start Time: 11:35
End Time: 13:43

DRY GAS METER CONDITIONS

ΔH:	0.96	In. H_2O
Meter Temperature, Tm:	98.5	°F
Sqrt ΔP:	1.146	In. H_2O
Stack Temperature, Ts:	74.7	°F
Meter Volume, Vm:	72.972	ft^3
Meter Volume, Vmstd:	67.106	dscf
Meter Volume, Vwstd:	1.036	wscf
Isokinetic Variance:	96.3	%I
Test Length	120.00	in mins.
Nozzle Diameter	0.169	in inches
Barometric Pressure	29.33	in Hg
Calculated Fo:	#DIV/0!	

STACK CONDITIONS

Static Pressure	-5.00	in. H_2O
Flue Pressure (Ps):	28.96	in. Hg. abs.
Carbon Dioxide:	0.00	%
Oxygen:	20.90	%
Nitrogen:	79.1	%
Gas Weight dry, Md:	28.836	lb/lb mole
Gas Weight wet, Ms:	28.671	lb/lb mole
Excess Air:	---	%
Gas Velocity, Vs:	66.067	fps
Volumetric Flow:	5,535	acfm
Volumetric Flow:	5,210	dscfm
Volumetric Flow:	5,290	scfm
Fo Validity:	#DIV/0!	

MOISTURE DETERMINATION

Initial Impinger Content:	2103.8	ml	Silica Initial Wt.	797.7	grams
Final Impinger Content:	2114.2	ml	Silica Final Wt.	809.3	grams
Impinger Difference:	10.4	ml	Silica Difference:	11.6	grams

Total Water Gain: 22.0 Moisture, Bws: 0.015 **Supersaturation Value, Bws: 0.030**

Port-Point No.	Clock Time	Velocity Head Δp in. H2O	Orifice ΔH in. H2O	Actual Meter Vol. ft^3	Stack Temp °F	Meter Temp Inlet °F	Meter Temp Outlet °F	Sqrt. Δp	Collected Vol. ft^3	Point Vel ft/sec
1-1	11:35:00	1.70	1.23	850.251	73	94	91	1.304	3.689	75.134
1-2	11:40:00	1.70	1.23	853.940	74	94	95	1.304	3.570	75.134
1-3	11:45:00	1.60	1.16	857.510	74	96	95	1.265	3.260	72.891
1-4	11:50:00	1.50	1.08	860.770	75	98	96	1.225	3.051	70.576
1-5	11:55:00	1.30	0.94	863.821	75	99	97	1.140	3.129	65.703
1-6	12:00:00	1.20	0.87	866.950	75	99	97	1.095	2.800	63.125
1-7	12:05:00	1.10	0.79	869.750	75	99	98	1.049	2.650	60.438
1-8	12:10:00	1.10	0.79	872.400	75	101	99	1.049	2.910	60.438
1-9	12:15:00	1.10	0.79	875.310	75	101	99	1.049	2.910	60.438
1-10	12:20:00	1.00	0.72	878.220	75	101	99	1.000	2.570	57.625
1-11	12:25:00	1.10	0.79	880.790	75	101	99	1.049	2.770	60.438
1-12	12:30:00	1.10	0.79	883.560	75	100	100	1.049	2.650	60.438
	12:35:00			886.210						
2-1	12:43:00	1.20	0.87	886.210	75	100	100	1.095	3.050	63.125
2-2	12:48:00	1.30	0.94	889.260	75	100	100	1.140	3.100	65.703
2-3	12:53:00	1.30	0.94	892.360	75	100	99	1.140	3.010	65.703
2-4	12:58:00	1.40	1.01	895.370	75	100	99	1.183	3.110	68.183
2-5	13:03:00	1.30	1.01	898.480	75	99	99	1.140	2.820	65.703
2-6	13:08:00	1.30	0.94	901.300	75	99	99	1.140	3.250	65.703
2-7	13:13:00	1.40	1.01	904.550	75	99	99	1.183	3.050	68.183
2-8	13:18:00	1.40	1.01	907.600	75	99	99	1.183	3.220	68.183
2-9	13:23:00	1.40	1.01	910.820	75	99	99	1.183	3.020	68.183
2-10	13:28:00	1.40	1.01	913.840	74	99	99	1.183	3.070	68.183
2-11	13:33:00	1.40	1.01	916.910	74	99	99	1.183	3.190	68.183
2-12	13:38:00	1.40	1.01	920.100	74	99	99	1.183	3.123	68.183
	13:43:00			923.223						
Total	2:00:00			72.972		99.0	98.1		72.972	
Average			0.96		74.7	98.5		1.146		
Min			0.72		73.0	91.0		1.000		
Max			1.23		75.0	101.0		1.304		

Run 3-Method 5/29

Client: Rk & Associates, Inc.
Facility: Behr Iron and Metal Rockford Facility
Test Location: Sweeco Separator
Source Condition: Normal

Date: 10/7/15
Start Time: 14:20
End Time: 16:28

DRY GAS METER CONDITIONS

ΔH:	1.10	In. H_2O
Meter Temperature, Tm:	96.9	°F
Sqrt ΔP:	1.231	In. H_2O
Stack Temperature, Ts:	77.0	°F
Meter Volume, Vm:	78.436	ft^3
Meter Volume, Vmstd:	72.372	dscf
Meter Volume, Vwstd:	1.027	wscf
Isokinetic Variance:	96.8	%I
Test Length	120.00	in mins.
Nozzle Diameter	0.169	in inches
Barometric Pressure	29.33	in Hg
Calculated Fo:	#DIV/0!	

STACK CONDITIONS

Static Pressure	-5.00	in. H_2O
Flue Pressure (Ps):	28.96	in. Hg. abs.
Carbon Dioxide:	0.00	%
Oxygen:	20.90	%
Nitrogen:	79.1	%
Gas Weight dry, Md:	28.836	lb/lb mole
Gas Weight wet, Ms:	28.684	lb/lb mole
Excess Air:	---	%
Gas Velocity, Vs:	71.066	fps
Volumetric Flow:	5,953	acfm
Volumetric Flow:	5,587	dscfm
Volumetric Flow:	5,666	scfm
Fo Validity:	#DIV/0!	

MOISTURE DETERMINATION

Initial Impinger Content:	1919.3	ml	Silica Initial Wt.	839.9	grams
Final Impinger Content:	1929.6	ml	Silica Final Wt.	851.4	grams
Impinger Difference:	10.3	ml	Silica Difference:	11.5	grams

Total Water Gain: 21.8 Moisture, Bws: 0.014 **Supersaturation Value, Bws: 0.032**

Port-Point No.	Clock Time	Velocity Head Δp in. H2O	Orifice ΔH in. H2O	Actual Meter Vol. ft^3	Stack Temp °F	Meter Temp Inlet °F	Meter Temp Outlet °F	Sqrt. Δp	Collected Vol. ft^3	Point Vel ft/sec
1-1	14:20:00	1.60	1.16	23.574	77	95	97	1.265	3.536	73.030
1-2	14:25:00	1.60	1.16	27.110	77	97	96	1.265	3.340	73.030
1-3	14:30:00	1.70	1.23	30.450	77	97	97	1.304	3.440	75.278
1-4	14:35:00	1.70	1.23	33.890	77	97	97	1.304	4.450	75.278
1-5	14:40:00	1.20	0.87	38.340	77	97	97	1.095	1.980	63.246
1-6	14:45:00	1.20	0.87	40.320	77	98	98	1.095	2.900	63.246
1-7	14:50:00	1.80	1.30	43.220	77	99	99	1.342	3.310	77.460
1-8	14:55:00	1.80	1.30	46.530	77	99	99	1.342	3.420	77.460
1-9	15:00:00	1.80	1.30	49.950	77	98	98	1.342	3.710	77.460
1-10	15:05:00	1.70	1.23	53.660	77	97	97	1.304	3.500	75.278
1-11	15:10:00	1.80	1.30	57.160	77	97	97	1.342	3.650	77.460
1-12	15:15:00	1.70	1.23	60.810	77	97	97	1.304	3.420	75.278
	15:20:00			64.230						
2-1	15:28:00	1.30	0.94	64.230	77	97	95	1.140	3.210	65.828
2-2	15:33:00	1.40	1.01	67.440	77	97	96	1.183	3.110	68.313
2-3	15:38:00	1.40	1.01	70.550	77	98	97	1.183	3.260	68.313
2-4	15:43:00	1.40	1.01	73.810	77	98	97	1.183	2.780	68.313
2-5	15:48:00	1.40	1.01	76.590	77	97	96	1.183	3.340	68.313
2-6	15:53:00	1.50	1.08	79.930	77	97	96	1.225	3.030	70.711
2-7	15:58:00	1.50	1.08	82.960	77	96	96	1.225	3.380	70.711
2-8	16:03:00	1.40	1.01	86.340	77	96	96	1.183	3.070	68.313
2-9	16:08:00	1.40	1.01	89.410	77	96	96	1.183	3.040	68.313
2-10	16:13:00	1.40	1.01	92.450	77	96	96	1.183	3.180	68.313
2-11	16:18:00	1.40	1.01	95.630	77	96	96	1.183	3.130	68.313
2-12	16:23:00	1.40	1.01	98.760	77	96	96	1.183	3.250	68.313
	16:28:00			102.010						
Total	2:00:00			78.436		97.0	96.8		78.436	
Average			1.10		77.0	96.9		1.231		
Min			0.87		77.0	95.0		1.095		
Max			1.30		77.0	99.0		1.342		

Run 4-Method 5/29

Client: Rk & Associates, Inc.
Facility: Behr Iron and Metal Rockford Facility
Test Location: Sweeco Separator
Source Condition: Normal

Date: 10/7/15
Start Time: 17:00
End Time: 19:05

DRY GAS METER CONDITIONS

ΔH:	1.76	In. H_2O
Meter Temperature, Tm:	86.2	°F
Sqrt ΔP:	1.532	In. H_2O
Stack Temperature, Ts:	75.8	°F
Meter Volume, Vm:	96.220	ft^3
Meter Volume, Vmstd:	90.668	dscf
Meter Volume, Vwstd:	1.135	wscf
Isokinetic Variance:	97.2	%I
Test Length	120.00	in mins.
Nozzle Diameter	0.169	in inches
Barometric Pressure	29.33	in Hg
Calculated Fo:	#DIV/0!	

STACK CONDITIONS

Static Pressure	-5.00	in. H_2O
Flue Pressure (Ps):	28.96	in. Hg. abs.
Carbon Dioxide:	0.00	%
Oxygen:	20.90	%
Nitrogen:	79.1	%
Gas Weight dry, Md:	28.836	lb/lb mole
Gas Weight wet, Ms:	28.702	lb/lb mole
Excess Air:	---	%
Gas Velocity, Vs:	88.325	fps
Volumetric Flow:	7,399	acfm
Volumetric Flow:	6,971	dscfm
Volumetric Flow:	7,058	scfm
Fo Validity:	#DIV/0!	

MOISTURE DETERMINATION

Initial Impinger Content:	2106.6	ml	Silica Initial Wt.	800.1	grams
Final Impinger Content:	2115.9	ml	Silica Final Wt.	814.9	grams
Impinger Difference:	9.3	ml	Silica Difference:	14.8	grams

Total Water Gain: 24.1 Moisture, Bws: 0.012 **Supersaturation Value, Bws: 0.031**

Port-Point No.	Clock Time	Velocity Head Δp in. H2O	Orifice ΔH in. H2O	Actual Meter Vol. ft^3	Stack Temp °F	Meter Temp Inlet °F	Meter Temp Outlet °F	Sqrt. Δp	Collected Vol. ft^3	Point Vel ft/sec
1-1	17:00:00	3.30	2.39	4.610	73	89	88	1.817	4.950	104.731
1-2	17:05:00	3.50	2.54	9.560	73	89	88	1.871	4.860	107.858
1-3	17:10:00	3.50	2.54	14.420	74	89	88	1.871	3.950	107.858
1-4	17:15:00	3.50	2.54	18.370	74	89	88	1.871	5.090	107.858
1-5	17:20:00	3.30	2.39	23.460	76	90	87	1.817	4.540	104.731
1-6	17:25:00	3.30	2.39	28.000	78	90	87	1.817	4.990	104.731
1-7	17:30:00	3.40	2.46	32.990	79	90	87	1.844	4.790	106.306
1-8	17:35:00	3.20	2.32	37.780	80	90	87	1.789	4.830	103.132
1-9	17:40:00	2.70	1.96	42.610	80	90	87	1.643	4.410	94.733
1-10	17:45:00	2.40	1.74	47.020	80	90	87	1.549	3.870	89.315
1-11	17:50:00	2.40	1.74	50.890	77	89	85	1.549	4.270	89.315
1-12	17:55:00	2.00	1.45	55.160	77	89	85	1.414	3.630	81.533
	18:00:00			58.790						
2-1	18:05:00	3.00	2.17	58.790	76	85	83	1.732	4.700	99.857
2-2	18:10:00	3.00	2.17	63.490	76	85	84	1.732	4.730	99.857
2-3	18:15:00	2.00	1.45	68.220	77	86	85	1.414	3.590	81.533
2-4	18:20:00	2.20	1.59	71.810	77	86	85	1.483	4.190	85.513
2-5	18:25:00	2.00	1.45	76.000	77	86	85	1.414	3.810	81.533
2-6	18:30:00	2.10	1.52	79.810	75	86	85	1.449	3.640	83.547
2-7	18:35:00	1.50	1.08	83.450	74	85	84	1.225	3.110	70.610
2-8	18:40:00	1.40	1.01	86.560	74	85	84	1.183	2.700	68.216
2-9	18:45:00	1.40	1.01	89.260	73	84	83	1.183	3.180	68.216
2-10	18:50:00	1.40	1.01	92.440	73	83	82	1.183	3.270	68.216
2-11	18:55:00	0.92	0.66	95.710	73	83	82	0.959	2.610	55.299
2-12	19:00:00	0.92	0.66	98.320	73	82	81	0.959	2.510	55.299
	19:05:00			100.830						
Total	2:00:00			96.220		87.1	85.3		96.220	
Average			1.76		75.8	86.2		1.532		
Min			0.66		73.0	81.0		0.959		
Max			2.54		80.0	90.0		1.871		

Client:	Rk & Associates, Inc.			
Facility:	Behr Iron and Metal Rockford Facility			
Test Location:	Lead Pot 2/Lead Pot Dross Drum/Lead Pot 3 (After Cyclone)			
Project #:	M154005			
Test Method:	5/29			
Test Engineer:	BPT			
Test Technician:	NCC			
	R1	**R2**	**R3**	**R4**
Temp ID:	CM29	CM29	CM29	CM29
Meter ID:	CM29	CM29	CM29	CM29
Pitot ID:	072A	072A	072A	072A
Nozzle Diameter (Inches):	0.271	0.271	0.271	0.271
Meter Calibration Factor (Y):	0.991	0.991	0.991	0.991
Meter Orifice Setting (Delta H):	1.668	1.668	1.668	1.668
Nozzle Kit ID Number and Material:	Teflon #9	Teflon #9	Teflon #9	Teflon #9
Pitot Tube Coefficient:	0.840			
Probe Length (Feet):	5.0			
Probe Liner Material:	Glass			
Port Length (Inches):	4.50			
Port Size (Diameter, Inches):	4.50			
Port Type:	Nipple			
Duct Shape:	Circular			
Diameter (Feet):	2.625			
Duct Area (Square Feet):	5.412			
Upstream Diameters:	12.5"			
Downstream Diameters:	62"			
Number of Ports Sampled:	2			
Number of Points per Port:	12			
Minutes per Point:	5.0			
Minutes per Reading:	5.0			
Total Number of Traverse Points:	24			
Test Length (Minutes):	120			
Train Type:	Hot Box			
Source Condition:	Normal			
Servomex Serial Number:	01440D1/3935			
Moisture Balance ID:	S10-37			
# of Runs	4			

Client: Rk & Associates, Inc.
Facility: Behr Iron and Metal Rockford Facility
Test Location: Lead Pot 2/Lead Pot Dross Drum/Lead Pot 3 (After Cyclone)
Test Method: 5/29

Source Condtion:		Normal Run 1	Normal Run 2	Normal Run 3	Normal Run 4
Identify Analyte:	Antimony (Sb)				
Molecular Weight:	121.75	ADL	ADL	ADL	ADL
ug (net) collected:		72.3	10.11	110.35	8.77
Identify Analyte:	Arsenic (As)				
Molecular Weight:	74.92	ADL	ADL	ADL	ADL
ug (net) collected:		19.29	7.79	9.18	4.56
Identify Analyte:	Beryllium (Be)				
Molecular Weight:	9.01	BDL	BDL	BDL	BDL
ug (net) collected:		0.55	0.55	0.55	0.55
Identify Analyte:	Cadmium (Cd)				
Molecular Weight:	112.4	ADL	ADL	ADL	DLL
ug (net) collected:		1.746	1.30	2.917	0.608
Identify Analyte:	Chromium (Cr)				
Molecular Weight:	51.99	ADL	ADL	ADL	ADL
ug (net) collected:		28.15	64.85	18.85	9.01
Identify Analyte:	Cobalt (Co)				
Molecular Weight:	58.93	ADL	ADL	ADL	ADL
ug (net) collected:		3.942	2.42	2.835	1.343
Identify Analyte:	Copper (Cu)				
Molecular Weight:	63.55	ADL	ADL	ADL	ADL
ug (net) collected:		232.6	95.2	179.9	84.2
Identify Analyte:	Lead (Pb)				
Molecular Weight:	207.19	ADL	ADL	ADL	ADL
ug (net) collected:		1789.46	781.36	1484.77	1666.27
Identify Analyte:	Manganese (Mn)				
Molecular Weight:	54.94	ADL	ADL	ADL	DLL
ug (net) collected:		12.27	5.28	7.28	5.22
Identify Analyte:	Nickel (Ni)				
Molecular Weight:	58.71	ADL	ADL	ADL	ADL
ug (net) collected:		44.11	27.71	23.87	13.89
Identify Analyte:	Selenium (Se)				
Molecular Weight:	78.96	DLL	DLL	DLL	BDL
ug (net) collected:		5.55	5.71	5.53	5.5

Client: Rk & Associates, Inc.
Facility: Behr Iron and Metal Rockford Facility
Test Location: Lead Pot 2/Lead Pot Dross Drum/Lead Pot 3 (After Cyclone)
Test Method: 5/29

Source Condtion:		Normal Run 1	Normal Run 2	Normal Run 3	Normal Run 4
Identify Analyte:	Silver (Ag)				
Molecular Weight:	107.87	DLL	DLL	DLL	DLL
ug (net) collected:		1.11	2.15	1.24	1.16
Identify Analyte:	Zinc (Zn)				
Molecular Weight:	65.37	ADL	ADL	ADL	ADL
ug (net) collected:		191.2	68.9	105.2	55.2
Identify Analyte:	Barium (Ba)				
Molecular Weight:	137.33	DLL	DLL	ADL	DLL
ug (net) collected:		16.7	18.3	13.2	18.3

Run 1-Method 5/29

Client: Rk & Associates, Inc.
Facility: Behr Iron and Metal Rockford Facility
Test Location: Lead Pot 2/Lead Pot Dross Drum/Lead Pot 3 (After Cyclone)
Source Condition: Normal

Date: 10/7/15
Start Time: 8:20
End Time: 10:37

DRY GAS METER CONDITIONS

ΔH:	1.82	in. H_2O
Meter Temperature, Tm:	71.3	°F
Sqrt ΔP:	0.573	in. H_2O
Stack Temperature, Ts:	90.5	°F
Meter Volume, Vm:	93.080	ft^3
Meter Volume, Vmstd:	90.277	dscf
Meter Volume, Vwstd:	1.258	wscf
Isokinetic Variance:	102.1	%I
Test Length	120.00	in mins.
Nozzle Diameter	0.271	in inches
Barometric Pressure	29.33	in Hg
Calculated Fo:	#DIV/0!	

STACK CONDITIONS

Static Pressure	-5.50	in. H_2O
Flue Pressure (Ps):	28.93	in. Hg. abs.
Carbon Dioxide:	0.00	%
Oxygen:	20.90	%
Nitrogen:	79.10	%
Gas Weight dry, Md:	28.836	lb/lb mole
Gas Weight wet, Ms:	28.687	lb/lb mole
Excess Air:	---	%
Gas Velocity, Vs:	33.540	fps
Volumetric Flow:	10,891	acfm
Volumetric Flow:	9,959	dscfm
Volumetric Flow:	10,098	scfm
Fo Validity:	#DIV/0!	

MOISTURE DETERMINATION

Initial Impinger Content:	2164.0	ml
Final Impinger Content:	2170.5	ml
Impinger Difference:	6.5	ml
Total Water Gain:	26.7	

Silica Initial Wt.	813.3	grams
Silica Final Wt.	833.5	grams
Silica Difference:	20.2	grams

Moisture, Bws: 0.014 **Supersaturation Value, Bws:** **0.050**

Port-Point No.	Clock Time	Velocity Head Δp in. H2O	Orifice ΔH in. H2O	Actual Meter Vol. ft^3	Stack Temp °F	Meter Temp Inlet °F	Meter Temp Outlet °F	Sqrt. Δp	Collected Vol. ft^3	Point Vel ft/sec
1-1	8:20:00	0.33	1.74	26.955	86	59	60	0.574	3.975	33.602
1-2	8:25:00	0.33	1.74	30.930	85	59	63	0.574	3.790	33.602
1-3	8:30:00	0.32	1.68	34.720	85	60	65	0.566	3.770	33.089
1-4	8:35:00	0.27	1.42	38.490	86	61	67	0.520	3.540	30.394
1-5	8:40:00	0.20	1.05	42.030	88	62	68	0.447	3.060	26.159
1-6	8:45:00	0.20	1.05	45.090	88	63	68	0.447	3.000	26.159
1-7	8:50:00	0.53	2.80	48.090	89	64	69	0.728	4.860	42.584
1-8	8:55:00	0.54	2.86	52.950	91	65	71	0.735	4.980	42.984
1-9	9:00:00	0.54	2.86	57.930	91	66	72	0.735	5.030	42.984
1-10	9:05:00	0.58	3.08	62.960	91	67	73	0.762	5.180	44.547
1-11	9:10:00	0.68	3.62	68.140	91	68	74	0.825	5.630	48.235
1-12	9:15:00	0.37	1.98	73.770	92	69	76	0.608	4.226	35.580
	9:20:00			77.996						
2-1	9:37:00	0.52	2.77	77.996	93	72	72	0.721	4.974	42.180
2-2	9:42:00	0.47	2.50	82.970	93	72	75	0.686	4.740	40.101
2-3	9:47:00	0.47	2.50	87.710	94	73	77	0.686	4.600	40.101
2-4	9:52:00	0.37	1.89	92.310	95	75	79	0.608	3.790	35.580
2-5	9:57:00	0.34	1.74	96.100	95	75	79	0.583	3.920	34.107
2-6	10:02:00	0.19	0.97	100.020	95	76	79	0.436	2.920	25.497
2-7	10:07:00	0.12	0.61	102.940	95	77	76	0.346	2.370	20.263
2-8	10:12:00	0.21	1.07	105.310	94	77	76	0.458	3.090	26.805
2-9	10:17:00	0.15	0.76	108.400	95	76	76	0.387	2.580	22.654
2-10	10:22:00	0.18	0.93	110.980	92	77	79	0.424	2.940	24.817
2-11	10:27:00	0.22	1.15	113.920	84	77	79	0.469	3.100	27.436
2-12	10:32:00	0.19	0.97	117.020	85	78	80	0.436	3.015	25.497
	10:37:00			120.035						
Total	2:00:00			93.080		69.5	73.0		93.080	
Average			1.82		90.5	71.3		0.573		
Min			0.61		84.0	59.0		0.346		
Max			3.62		95.0	80.0		0.825		

Run 2-Method 5/29

Client: Rk & Associates, Inc.
Facility: Behr Iron and Metal Rockford Facility
Test Location: Lead Pot 2/Lead Pot Dross Drum/Lead Pot 3 (After Cyclone)
Source Condition: Normal

Date: 10/7/15
Start Time: 11:35
End Time: 13:43

DRY GAS METER CONDITIONS

ΔH:	1.88	In. H_2O
Meter Temperature, Tm:	85.3	°F
Sqrt ΔP:	0.589	In. H_2O
Stack Temperature, Ts:	107.6	°F
Meter Volume, Vm:	95.617	ft^3
Meter Volume, Vmstd:	90.366	dscf
Meter Volume, Vwstd:	1.375	wscf
Isokinetic Variance:	101.1	%I
Test Length	120.00	in mins.
Nozzle Diameter	0.271	in inches
Barometric Pressure	29.33	in Hg
Calculated Fo:	#DIV/0!	

STACK CONDITIONS

Static Pressure	-5.50	in. H_2O
Flue Pressure (Ps):	28.93	in. Hg. abs.
Carbon Dioxide:	0.00	%
Oxygen:	20.90	%
Nitrogen:	79.1	%
Gas Weight dry, Md:	28.836	lb/lb mole
Gas Weight wet, Ms:	28.674	lb/lb mole
Excess Air:	---	%
Gas Velocity, Vs:	34.994	fps
Volumetric Flow:	11,363	acfm
Volumetric Flow:	10,065	dscfm
Volumetric Flow:	10,219	scfm
Fo Validity:	#DIV/0!	

MOISTURE DETERMINATION

Initial Impinger Content:	1943.7	ml	Silica Initial Wt.	820.1	grams
Final Impinger Content:	1955.9	ml	Silica Final Wt.	837.1	grams
Impinger Difference:	12.2	ml	Silica Difference:	17.0	grams

Total Water Gain: 29.2 Moisture, Bws: 0.015 **Supersaturation Value, Bws: 0.084**

Port-Point No.	Clock Time	Velocity Head Δp In. H2O	Orifice ΔH in. H2O	Actual Meter Vol. ft^3	Stack Temp °F	Meter Temp Inlet °F	Meter Temp Outlet °F	Sqrt. Δp	Collected Vol. ft^3	Point Vel ft/sec
1-1	11:35:00	0.48	2.41	20.448	112	85	84	0.693	4.682	41.159
1-2	11:40:00	0.49	2.41	25.130	126	86	86	0.700	4.730	41.585
1-3	11:45:00	0.47	2.33	29.860	121	86	88	0.686	4.580	40.728
1-4	11:50:00	0.42	2.10	34.440	119	87	88	0.648	4.270	38.501
1-5	11:55:00	0.35	1.74	38.710	120	87	89	0.592	3.920	35.146
1-6	12:00:00	0.26	1.30	42.630	118	88	89	0.510	3.550	30.292
1-7	12:05:00	0.11	0.55	46.180	119	88	89	0.332	2.320	19.703
1-8	12:10:00	0.14	0.70	48.500	117	88	88	0.374	2.550	22.228
1-9	12:15:00	0.13	0.65	51.050	118	89	87	0.361	2.410	21.420
1-10	12:20:00	0.17	0.86	53.460	111	88	86	0.412	2.640	24.494
1-11	12:25:00	0.19	0.97	56.100	107	87	86	0.436	3.000	25.895
1-12	12:30:00	0.20	1.02	59.100	103	87	86	0.447	2.993	26.568
	12:35:00			62.093						
2-1	12:43:00	0.32	1.62	62.093	105	84	83	0.566	3.847	33.606
2-2	12:48:00	0.33	1.67	65.940	107	84	83	0.574	3.830	34.127
2-3	12:53:00	0.33	1.67	69.770	100	83	84	0.574	3.900	34.127
2-4	12:58:00	0.30	1.53	73.670	102	82	83	0.548	3.740	32.539
2-5	13:03:00	0.23	1.16	77.410	107	82	84	0.480	3.260	28.491
2-6	13:08:00	0.25	1.28	80.670	100	82	83	0.500	3.470	29.704
2-7	13:13:00	0.55	2.82	84.140	98	81	83	0.742	4.860	44.058
2-8	13:18:00	0.57	2.93	89.000	97	82	84	0.755	5.100	44.852
2-9	13:23:00	0.58	2.99	94.100	96	82	85	0.762	5.210	45.244
2-10	13:28:00	0.70	3.61	99.310	96	82	86	0.837	5.670	49.704
2-11	13:33:00	0.59	3.08	104.980	91	82	87	0.768	5.220	45.632
2-12	13:38:00	0.71	3.69	110.200	93	83	88	0.843	5.865	50.058
	13:43:00			116.065						
Total	2:00:00			95.617		84.8	85.8		95.617	
Average			1.88		107.6	85.3		0.589		
Min			0.55		91.0	81.0		0.332		
Max			3.69		126.0	89.0		0.843		

Run 3-Method 5/29

Client: Rk & Associates, Inc.
Facility: Behr Iron and Metal Rockford Facility
Test Location: Lead Pot 2/Lead Pot Dross Drum/Lead Pot 3 (After Cyclone)
Source Condition: Normal

Date: 10/7/15
Start Time: 14:20
End Time: 16:28

DRY GAS METER CONDITIONS

ΔH:	1.84	In. H_2O
Meter Temperature, Tm:	82.8	°F
Sqrt ΔP:	0.586	In. H_2O
Stack Temperature, Ts:	104.8	°F
Meter Volume, Vm:	94.836	ft^3
Meter Volume, Vmstd:	90.028	dscf
Meter Volume, Vwstd:	1.356	wscf
Isokinetic Variance:	101.1	%I
Test Length	120.00	in mins.
Nozzle Diameter	0.271	in inches
Barometric Pressure	29.33	in Hg
Calculated Fo:	#DIV/0!	

STACK CONDITIONS

Static Pressure	-5.50	in. H_2O
Flue Pressure (Ps):	28.93	in. Hg. abs.
Carbon Dioxide:	0.00	%
Oxygen:	20.90	%
Nitrogen:	79.1	%
Gas Weight dry, Md:	28.836	lb/lb mole
Gas Weight wet, Ms:	28.675	lb/lb mole
Excess Air:	—	%
Gas Velocity, Vs:	34.710	fps
Volumetric Flow:	11,271	acfm
Volumetric Flow:	10,034	dscfm
Volumetric Flow:	10,185	scfm
Fo Validity:	#DIV/0!	

MOISTURE DETERMINATION

Initial Impinger Content:	2192.0	ml
Final Impinger Content:	2205.7	ml
Impinger Difference:	13.7	ml
Total Water Gain:	28.8	

Silica Initial Wt.	820.7	grams
Silica Final Wt.	835.8	grams
Silica Difference:	15.1	grams

Moisture, Bws: 0.015 **Supersaturation Value, Bws: 0.077**

Port-Point No.	Clock Time	Velocity Head Δp in. H2O	Orifice ΔH in. H2O	Actual Meter Vol. ft^3	Stack Temp °F	Meter Temp Inlet °F	Meter Temp Outlet °F	Sqrt. Δp	Collected Vol. ft^3	Point Vel ft/sec
1-1	14:20:00	0.49	2.52	16.505	94	81	81	0.700	4.795	41.482
1-2	14:25:00	0.51	2.62	21.300	96	81	83	0.714	4.970	42.320
1-3	14:30:00	0.50	2.57	26.270	99	81	85	0.707	4.730	41.903
1-4	14:35:00	0.43	2.19	31.000	103	82	86	0.656	4.350	38.859
1-5	14:40:00	0.35	1.78	35.350	104	82	84	0.592	3.760	35.059
1-6	14:45:00	0.28	1.41	39.110	109	81	84	0.529	3.730	31.357
1-7	14:50:00	0.18	0.90	42.840	110	81	84	0.424	2.860	25.142
1-8	14:55:00	0.12	0.60	45.700	112	81	83	0.346	2.330	20.528
1-9	15:00:00	0.16	0.81	48.030	107	81	83	0.400	3.240	23.704
1-10	15:05:00	0.18	0.90	51.270	104	81	82	0.424	2.180	25.142
1-11	15:10:00	0.17	0.87	53.450	100	81	83	0.412	2.860	24.433
1-12	15:15:00	0.19	0.97	56.310	102	81	83	0.436	3.030	25.831
	15:20:00			59.340						
2-1	15:28:00	0.34	1.72	59.340	105	81	81	0.583	3.850	34.554
2-2	15:33:00	0.33	1.66	63.190	107	81	82	0.574	3.910	34.042
2-3	15:38:00	0.33	1.66	67.100	108	81	83	0.574	4.080	34.042
2-4	15:43:00	0.28	1.42	71.180	104	81	86	0.529	3.450	31.357
2-5	15:48:00	0.22	1.11	74.630	106	81	85	0.469	3.120	27.795
2-6	15:53:00	0.24	1.21	77.750	107	82	84	0.490	3.260	29.031
2-7	15:58:00	0.55	2.78	81.010	105	81	83	0.742	4.910	43.948
2-8	16:03:00	0.60	3.04	85.920	104	81	85	0.775	5.210	45.903
2-9	16:08:00	0.59	3.00	91.130	105	81	87	0.768	5.250	45.518
2-10	16:13:00	0.64	3.24	96.380	107	81	88	0.800	5.390	47.408
2-11	16:18:00	0.62	3.13	101.770	110	82	90	0.787	5.390	46.661
2-12	16:23:00	0.39	1.98	107.160	108	83	90	0.624	4.181	37.008
	16:28:00			111.341						
Total	2:00:00			94.836		81.3	84.4		94.836	
Average			1.84		104.8	82.8		0.586		
Min			0.60		94.0	81.0		0.346		
Max			3.24		112.0	90.0		0.800		

Run 4-Method 5/29

Client: Rk & Associates, Inc.
Facility: Behr Iron and Metal Rockford Facility
Test Location: Lead Pot 2/Lead Pot Dross Drum/Lead Pot 3 (After Cyclone)
Source Condition: Normal

Date: 10/7/15
Start Time: 17:00
End Time: 19:05

DRY GAS METER CONDITIONS

ΔH:	1.87	In. H_2O
Meter Temperature, Tm:	78.4	°F
Sqrt ΔP:	0.592	In. H_2O
Stack Temperature, Ts:	105.5	°F
Meter Volume, Vm:	95.058	ft^3
Meter Volume, Vmstd:	90.979	dscf
Meter Volume, Vwstd:	1.408	wscf
Isokinetic Variance:	101.1	%I
Test Length	120.00	in mins.
Nozzle Diameter	0.271	in inches
Barometric Pressure	29.33	in Hg
Calculated Fo:	#DIV/0!	

STACK CONDITIONS

Static Pressure	-5.50	in. H_2O
Flue Pressure (Ps):	28.93	in. Hg. abs.
Carbon Dioxide:	0.00	%
Oxygen:	20.90	%
Nitrogen:	79.1	%
Gas Weight dry, Md:	28.836	lb/lb mole
Gas Weight wet, Ms:	28.671	lb/lb mole
Excess Air:	---	%
Gas Velocity, Vs:	35.134	fps
Volumetric Flow:	11,408	acfm
Volumetric Flow:	10,140	dscfm
Volumetric Flow:	10,297	scfm
Fo Validity:	#DIV/0!	

MOISTURE DETERMINATION

Initial Impinger Content:	1941.1	ml	Silica Initial Wt.	829.9	grams
Final Impinger Content:	1956.5	ml	Silica Final Wt.	844.4	grams
Impinger Difference:	15.4	ml	Silica Difference:	14.5	grams

Total Water Gain: 29.9 Moisture, Bws: 0.015 **Supersaturation Value, Bws: 0.079**

Port-Point No.	Clock Time	Velocity Head Δp in. H2O	Orifice ΔH in. H2O	Actual Meter Vol. ft^3	Stack Temp °F	Meter Temp Inlet °F	Meter Temp Outlet °F	Sqrt. Δp	Collected Vol. ft^3	Point Vel ft/sec
1-1	17:00:00	0.52	2.58	11.555	115	81	81	0.721	4.765	42.763
1-2	17:05:00	0.49	2.44	16.320	114	81	84	0.700	4.680	41.511
1-3	17:10:00	0.51	2.54	21.000	115	82	85	0.714	4.730	42.350
1-4	17:15:00	0.43	2.15	25.730	113	82	86	0.656	4.470	38.887
1-5	17:20:00	0.36	1.79	30.200	117	83	86	0.600	4.010	35.581
1-6	17:25:00	0.29	1.44	34.210	119	83	85	0.539	3.660	31.935
1-7	17:30:00	0.21	1.04	37.870	118	82	84	0.458	3.210	27.175
1-8	17:35:00	0.15	0.75	41.080	113	82	82	0.387	2.440	22.967
1-9	17:40:00	0.13	0.65	43.520	110	81	81	0.361	2.540	21.381
1-10	17:45:00	0.17	0.84	46.060	114	80	80	0.412	2.690	24.451
1-11	17:50:00	0.20	1.00	48.750	108	80	79	0.447	2.980	26.520
1-12	17:55:00	0.19	0.96	51.730	104	79	78	0.436	2.813	25.849
	18:00:00			54.543						
2-1	18:05:00	0.31	1.55	54.543	105	77	76	0.557	3.767	33.018
2-2	18:10:00	0.29	1.46	58.310	103	77	77	0.539	3.630	31.935
2-3	18:15:00	0.30	1.51	61.940	101	76	77	0.548	3.630	32.481
2-4	18:20:00	0.26	1.31	65.570	99	75	76	0.510	3.500	30.238
2-5	18:25:00	0.21	1.07	69.070	95	75	76	0.458	3.080	27.175
2-6	18:30:00	0.23	1.17	72.150	97	75	75	0.480	3.180	28.440
2-7	18:35:00	0.57	2.88	75.330	99	74	74	0.755	5.080	44.772
2-8	18:40:00	0.63	3.19	80.410	98	74	76	0.794	5.060	47.069
2-9	18:45:00	0.60	3.04	85.470	96	73	76	0.775	5.050	45.935
2-10	18:50:00	0.58	2.95	90.520	94	72	75	0.762	5.190	45.163
2-11	18:55:00	0.65	3.30	95.710	94	72	75	0.806	5.460	47.810
2-12	19:00:00	0.66	3.30	101.170	92	71	74	0.806	5.443	47.810
	19:05:00			106.613						
Total	2:00:00			95.058		77.8	79.1		95.058	
Average			1.87		105.5	78.4		0.592		
Min			0.65		92.0	71.0		0.361		
Max			3.30		119.0	86.0		0.806		

Client:	Rk & Associates, Inc.			
Facility:	Behr Iron and Metal Rockford Facility			
Test Location:	Blue Baghouse Outlet			
Project #:	M154005			
Test Method:	5/29			
Test Engineer:	MDK			
Test Technician:	KOJ			
	R1	**R2**	**R3**	**R4**
Temp ID:	CM18	CM18	CM18	CM18
Meter ID:	CM18	CM18	CM18	CM18
Pitot ID:	170A	170A	170A	170A
Nozzle Diameter (Inches):	0.239	0.239	0.239	0.239
Meter Calibration Factor (Y):	1.012	1.012	1.012	1.012
Meter Orifice Setting (Delta H):	1.565	1.565	1.565	1.565
Nozzle Kit ID Number and Material:	Teflon #1	Teflon #1	Teflon #1	Teflon #1
Pitot Tube Coefficient:	0.840			
Probe Length (Feet):	4.0			
Probe Liner Material:	Glass			
Sample Plane:	Horizontal			
Port Length (Inches):	6.00			
Port Size (Diameter, Inches):	6.00			
Port Type:	Nipple			
Duct Shape:	Circular			
Diameter (Feet):	3.416667			
Duct Area (Square Feet):	9.168			
Upstream Diameters:	>.5			
Downstream Diameters:	>2			
Number of Ports Sampled:	2			
Number of Points per Port:	12			
Minutes per Point:	5.0			
Minutes per Reading:	5.0			
Total Number of Traverse Points:	24			
Test Length (Minutes):	120			
Train Type:	Anderson Box			
Source Condition:	Normal			
Servomex Serial Number:	01440D1/3935			
Moisture Balance ID:	S10-37			
# of Runs	4			

Client: Rk & Associates, Inc.
Facility: Behr Iron and Metal Rockford Facility
Test Location: Blue Baghouse Outlet
Test Method: 5/29

Source Condtion:		Normal Run 1	Normal Run 2	Normal Run 3	Normal Run 4
Identify Analyte:	Antimony (Sb)				
Molecular Weight:	121.75	ADL	DLL	DLL	DLL
ug (net) collected:		6.26	1.87	1.66	1.18
Identify Analyte:	Arsenic (As)				
Molecular Weight:	74.92	DLL	DLL	BDL	BDL
ug (net) collected:		4.29	1.2	1.0	1.0
Identify Analyte:	Beryllium (Be)				
Molecular Weight:	9.01	BDL	BDL	BDL	BDL
ug (net) collected:		0.25	0.25	0.25	0.25
Identify Analyte:	Cadmium (Cd)				
Molecular Weight:	112.4	ADL	DLL	ADL	BDL
ug (net) collected:		0.526	1.69	1.097	0.25
Identify Analyte:	Chromium (Cr)				
Molecular Weight:	51.99	ADL	ADL	ADL	ADL
ug (net) collected:		7.58	7.13	5.76	4.21
Identify Analyte:	Cobalt (Co)				
Molecular Weight:	58.93	ADL	ADL	ADL	ADL
ug (net) collected:		4.873	2.866	2.788	1.852
Identify Analyte:	Copper (Cu)				
Molecular Weight:	63.55	ADL	ADL	ADL	ADL
ug (net) collected:		267.6	169.3	158.8	85.3
Identify Analyte:	Lead (Pb)				
Molecular Weight:	207.19	ADL	ADL	ADL	ADL
ug (net) collected:		237.87	59.35	43.96	38.01
Identify Analyte:	Manganese (Mn)				
Molecular Weight:	54.94	ADL	ADL	ADL	ADL
ug (net) collected:		22.37	9.94	9.87	6.22
Identify Analyte:	Nickel (Ni)				
Molecular Weight:	58.71	ADL	ADL	ADL	ADL
ug (net) collected:		58.09	61.93	50.67	26.38
Identify Analyte:	Selenium (Se)				
Molecular Weight:	78.96	DLL	BDL	DLL	BDL
ug (net) collected:		4.54	2.5	2.91	2.5

Client: Rk & Associates, Inc.
Facility: Behr Iron and Metal Rockford Facility
Test Location: Blue Baghouse Outlet
Test Method: 5/29

Source Condtion:		Normal Run 1	Normal Run 2	Normal Run 3	Normal Run 4
Identify Analyte:	Silver (Ag)				
Molecular Weight:	107.87	DLL	DLL	DLL	DLL
ug (net) collected:		0.89	0.52	0.93	1.34
Identify Analyte:	Zinc (Zn)				
Molecular Weight:	65.37	ADL	ADL	ADL	DLL
ug (net) collected:		242.8	103	95.6	60.5
Identify Analyte:	Barium (Ba)				
Molecular Weight:	137.33	ADL	ADL	DLL	DLL
ug (net) collected:		6.5	6.3	6.2	4.1

Run 1-Method 5/29

Client: Rk & Associates, Inc.
Facility: Behr Iron and Metal Rockford Facility
Test Location: Blue Baghouse Outlet
Source Condition: Normal

Date: 10/7/15
Start Time: 8:20
End Time: 10:39

DRY GAS METER CONDITIONS

ΔH:	4.49	in. H_2O
Meter Temperature, Tm:	73.3	°F
Sqrt ΔP:	1.163	in. H_2O
Stack Temperature, Ts:	84.9	°F
Meter Volume, Vm:	144.264	ft^3
Meter Volume, Vmstd:	143.295	dscf
Meter Volume, Vwstd:	1.762	wscf
Isokinetic Variance:	101.5	%I
Test Length	120.00	in mins.
Nozzle Diameter	0.239	in inches
Barometric Pressure	29.33	in Hg
Calculated Fo:	#DIV/0!	

STACK CONDITIONS

Static Pressure	-1.00	in. H_2O
Flue Pressure (Ps):	29.26	in. Hg. abs.
Carbon Dioxide:	0.00	%
Oxygen:	20.90	%
Nitrogen:	79.10	%
Gas Weight dry, Md:	28.836	lb/lb mole
Gas Weight wet, Ms:	28.704	lb/lb mole
Excess Air:	---	%
Gas Velocity, Vs:	67.259	fps
Volumetric Flow:	37,000	acfm
Volumetric Flow:	34,633	dscfm
Volumetric Flow:	35,058	scfm
Fo Validity:	#DIV/0!	

MOISTURE DETERMINATION

Initial Impinger Content:	2110.4	ml	Silica Initial Wt.	835.8	grams
Final Impinger Content:	2117.4	ml	Silica Final Wt.	866.2	grams
Impinger Difference:	7.0	ml	Silica Difference:	30.4	grams

Total Water Gain: 37.4 Moisture, Bws: 0.012 **Supersaturation Value, Bws: 0.041**

Port-Point No.	Clock Time	Velocity Head Δp in. H2O	Orifice ΔH in. H2O	Actual Meter Vol. ft^3	Stack Temp °F	Meter Temp Inlet °F	Meter Temp Outlet °F	Sqrt. Δp	Collected Vol. ft^3	Point Vel ft/sec
1-1	8:20:00	0.74	2.17	45.045	81	61	60	0.860	4.105	49.759
2	8:25:00	0.77	2.26	49.150	82	61	60	0.877	4.430	50.758
3	8:30:00	0.79	2.32	53.580	83	63	61	0.889	4.170	51.413
4	8:35:00	0.79	2.32	57.750	84	64	61	0.889	4.460	51.413
5	8:40:00	0.84	2.47	62.210	84	65	62	0.917	4.740	53.015
6	8:45:00	0.86	2.52	66.950	85	68	63	0.927	4.590	53.642
7	8:50:00	0.88	2.58	71.540	86	69	64	0.938	4.760	54.262
8	8:55:00	0.92	2.67	76.300	88	70	65	0.959	5.030	55.482
9	9:00:00	0.95	2.75	81.330	89	72	66	0.975	4.890	56.379
10	9:05:00	0.97	2.85	86.220	90	73	67	0.985	5.020	56.970
11	9:10:00	0.97	2.85	91.240	90	73	67	0.985	5.140	56.970
12	9:15:00	1.00	2.94	96.380	89	76	70	1.000	5.038	57.844
	9:20:00			101.418						
2-1	9:39:00	1.00	2.97	101.418	85	76	73	1.000	5.432	57.844
2	9:44:00	1.20	3.56	106.850	85	76	74	1.095	5.690	63.365
3	9:49:00	1.30	3.86	112.540	84	79	75	1.140	5.980	65.952
4	9:54:00	1.60	4.75	118.520	84	80	76	1.265	6.660	73.167
5	9:59:00	1.90	6.28	125.180	83	81	77	1.378	7.170	79.732
6	10:04:00	2.00	6.61	132.350	83	83	79	1.414	7.400	81.804
7	10:09:00	2.10	6.94	139.750	83	84	80	1.449	7.500	83.824
8	10:14:00	2.20	7.27	147.250	83	84	81	1.483	7.800	85.796
9	10:19:00	2.50	8.27	155.050	84	86	82	1.581	8.470	91.459
10	10:24:00	2.60	8.59	163.520	84	86	82	1.612	8.430	93.271
11	10:29:00	2.70	8.93	171.950	84	87	84	1.643	8.730	95.047
12	10:34:00	2.70	8.93	180.680	84	87	84	1.643	8.629	95.047
	10:39:00			189.309						
Total	2:00:00			144.264		75.2	71.4		144.264	
Average			4.49		84.9	73.3		1.163		
Min			2.17		81.0	60.0		0.860		
Max			8.93		90.0	87.0		1.643		

Mostardi Platt

Isokinetic V5.0 2/3/14

Run 2-Method 5/29

Client: Rk & Associates, Inc.
Facility: Behr Iron and Metal Rockford Facility
Test Location: Blue Baghouse Outlet
Source Condition: Normal

Date: 10/7/15
Start Time: 11:35
End Time: 13:43

DRY GAS METER CONDITIONS

ΔH:	1.25	In. H_2O
Meter Temperature, Tm:	95.4	°F
Sqrt ΔP:	0.642	In. H_2O
Stack Temperature, Ts:	93.6	°F
Meter Volume, Vm:	81.809	ft^3
Meter Volume, Vmstd:	77.402	dscf
Meter Volume, Vwstd:	1.324	wscf
Isokinetic Variance:	100.6	%I
Test Length	120.00	in mins.
Nozzle Diameter	0.239	in inches
Barometric Pressure	29.33	in Hg
Calculated Fo:	#DIV/0!	

STACK CONDITIONS

Static Pressure	-1.00	in. H_2O
Flue Pressure (Ps):	29.26	in. Hg. abs.
Carbon Dioxide:	0.00	%
Oxygen:	20.90	%
Nitrogen:	79.1	%
Gas Weight dry, Md:	28.836	lb/lb mole
Gas Weight wet, Ms:	28.654	lb/lb mole
Excess Air:	---	%
Gas Velocity, Vs:	37.441	fps
Volumetric Flow:	20,596	acfm
Volumetric Flow:	18,885	dscfm
Volumetric Flow:	19,207	scfm
Fo Validity:	#DIV/0!	

MOISTURE DETERMINATION

Initial Impinger Content:	2035.5	ml	Silica Initial Wt.	829.8	grams
Final Impinger Content:	2049.7	ml	Silica Final Wt.	843.7	grams
Impinger Difference:	14.2	ml	Silica Difference:	13.9	grams

Total Water Gain: 28.1 Moisture, Bws: 0.017 **Supersaturation Value, Bws: 0.054**

Port-Point No.	Clock Time	Velocity Head Δp in. H2O	Orifice ΔH in. H2O	Actual Meter Vol. ft^3	Stack Temp °F	Meter Temp Inlet °F	Meter Temp Outlet °F	Sqrt. Δp	Collected Vol. ft^3	Point Vel ft/sec
1-1	11:35:00	0.29	0.88	94.215	95	93	92	0.539	2.595	31.427
2	11:40:00	0.31	0.94	96.810	95	93	92	0.557	3.040	32.492
3	11:45:00	0.31	0.94	99.850	96	94	93	0.557	2.810	32.492
4	11:50:00	0.32	0.97	102.660	96	94	93	0.566	3.190	33.012
5	11:55:00	0.37	1.12	105.850	96	95	93	0.608	3.180	35.498
6	12:00:00	0.38	1.15	109.030	96	96	94	0.616	3.170	35.974
7	12:05:00	0.41	1.24	112.200	95	97	94	0.640	3.390	37.367
8	12:10:00	0.45	1.36	115.590	95	98	95	0.671	3.620	39.148
9	12:15:00	0.49	1.48	119.210	95	98	97	0.700	3.690	40.851
10	12:20:00	0.52	1.57	122.900	95	99	97	0.721	3.850	42.083
11	12:25:00	0.48	1.45	126.750	94	98	97	0.693	3.660	40.432
12	12:30:00	0.46	1.39	130.410	94	98	97	0.678	3.797	39.580
	12:35:00			134.207						
2-1	12:43:00	0.44	1.33	134.207	92	96	97	0.663	3.513	38.710
2	12:48:00	0.43	1.30	137.720	92	96	96	0.656	3.530	38.268
3	12:53:00	0.40	1.21	141.250	92	96	96	0.632	3.470	36.909
4	12:58:00	0.40	1.21	144.720	92	96	96	0.632	3.260	36.909
5	13:03:00	0.41	1.24	147.980	93	95	95	0.640	3.430	37.367
6	13:08:00	0.42	1.27	151.410	92	95	95	0.648	3.410	37.820
7	13:13:00	0.43	1.30	154.820	92	95	95	0.656	3.490	38.268
8	13:18:00	0.43	1.30	158.310	92	95	95	0.656	3.570	38.268
9	13:23:00	0.43	1.30	161.880	92	95	95	0.656	3.450	38.268
10	13:28:00	0.44	1.33	165.330	91	95	95	0.663	3.460	38.710
11	13:33:00	0.45	1.36	168.790	92	95	95	0.671	3.610	39.148
12	13:38:00	0.46	1.39	172.400	93	96	95	0.678	3.624	39.580
	13:43:00			176.024						
Total	2:00:00			81.809		95.8	95.0		81.809	
Average			1.25		93.6	95.4		0.642		
Min			0.88		91.0	92.0		0.539		
Max			1.57		96.0	99.0		0.721		

Isokinetic V5.0 2/3/14

Mostardi Platt

Run 3-Method 5/29

Client: Rk & Associates, Inc.
Facility: Behr Iron and Metal Rockford Facility
Test Location: Blue Baghouse Outlet
Source Condition: Normal

Date: 10/7/15
Start Time: 14:20
End Time: 16:28

DRY GAS METER CONDITIONS

ΔH:	1.12	In. H_2O
Meter Temperature, Tm:	93.8	°F
Sqrt ΔP:	0.610	In. H_2O
Stack Temperature, Ts:	97.6	°F
Meter Volume, Vm:	77.384	ft^3
Meter Volume, Vmstd:	73.402	dscf
Meter Volume, Vwstd:	1.145	wscf
Isokinetic Variance:	100.6	%I
Test Length	120.00	in mins.
Nozzle Diameter	0.239	in inches
Barometric Pressure	29.33	in Hg
Calculated Fo:	#DIV/0!	

STACK CONDITIONS

Static Pressure	-1.00	in. H_2O
Flue Pressure (Ps):	29.26	in. Hg. abs.
Carbon Dioxide:	0.00	%
Oxygen:	20.90	%
Nitrogen:	79.1	%
Gas Weight dry, Md:	28.836	lb/lb mole
Gas Weight wet, Ms:	28.670	lb/lb mole
Excess Air:	---	%
Gas Velocity, Vs:	35.696	fps
Volumetric Flow:	19,637	acfm
Volumetric Flow:	17,903	dscfm
Volumetric Flow:	18,182	scfm
Fo Validity:	#DIV/0!	

MOISTURE DETERMINATION

Initial Impinger Content:	2125.5	ml	Silica Initial Wt.	834.9	grams
Final Impinger Content:	2135.6	ml	Silica Final Wt.	849.1	grams
Impinger Difference:	10.1	ml	Silica Difference:	14.2	grams

Total Water Gain: 24.3 Moisture, Bws: 0.015 **Supersaturation Value, Bws: 0.061**

Port-Point No.	Clock Time	Velocity Head Δp in. H2O	Orifice ΔH in. H2O	Actual Meter Vol. ft^3	Stack Temp °F	Meter Temp Inlet °F	Meter Temp Outlet °F	Sqrt. Δp	Collected Vol. ft^3	Point Vel ft/sec
1-1	14:20:00	0.39	1.17	76.729	104	91	92	0.624	2.901	36.565
2	14:25:00	0.35	1.05	79.630	104	91	92	0.592	3.320	34.639
3	14:30:00	0.35	1.05	82.950	103	92	92	0.592	3.120	34.639
4	14:35:00	0.36	1.08	86.070	103	92	92	0.600	3.130	35.130
5	14:40:00	0.37	1.11	89.200	103	93	92	0.608	3.220	35.615
6	14:45:00	0.38	1.14	92.420	101	94	92	0.616	3.160	36.093
7	14:50:00	0.41	1.23	95.580	100	94	92	0.640	3.520	37.490
8	14:55:00	0.42	1.26	99.100	99	94	92	0.648	3.410	37.945
9	15:00:00	0.44	1.32	102.510	97	95	93	0.663	3.580	38.838
10	15:05:00	0.44	1.32	106.090	96	95	93	0.663	3.430	38.838
11	15:10:00	0.41	1.23	109.520	95	95	93	0.640	3.440	37.490
12	15:15:00	0.36	1.08	112.960	95	95	93	0.600	3.375	35.130
	15:20:00			116.335						
2-1	15:28:00	0.27	0.81	116.335	96	95	93	0.520	2.755	30.424
2	15:33:00	0.26	0.78	119.090	96	95	93	0.510	2.670	29.855
3	15:38:00	0.23	0.69	121.760	96	96	93	0.480	2.550	28.080
4	15:43:00	0.26	0.78	124.310	96	96	93	0.510	2.800	29.855
5	15:48:00	0.34	1.02	127.110	96	96	93	0.583	3.130	34.140
6	15:53:00	0.39	1.17	130.240	96	96	93	0.624	3.230	36.565
7	15:58:00	0.43	1.29	133.470	95	96	93	0.656	3.350	38.394
8	16:03:00	0.44	1.32	136.820	94	96	93	0.663	3.530	38.838
9	16:08:00	0.44	1.32	140.350	94	96	93	0.663	3.480	38.838
10	16:13:00	0.45	1.35	143.830	95	97	93	0.671	3.690	39.277
11	16:18:00	0.42	1.26	147.520	95	97	94	0.648	3.400	37.945
12	16:23:00	0.38	1.14	150.920	93	98	94	0.616	3.193	36.093
	16:28:00			154.113						
Total	2:00:00			77.384		94.8	92.8		77.384	
Average			1.12		97.6	93.8		0.610		
Min			0.69		93.0	91.0		0.480		
Max			1.35		104.0	98.0		0.671		

Mostardi Platt

Isokinetic V5.0 2/3/14

Run 4-Method 5/29

Client: Rk & Associates, Inc.
Facility: Behr Iron and Metal Rockford Facility
Test Location: Blue Baghouse Outlet
Source Condition: Normal

Date: 10/7/15
Start Time: 17:00
End Time: 19:05

DRY GAS METER CONDITIONS

ΔH:	1.18	In. H_2O
Meter Temperature, Tm:	83.6	°F
Sqrt ΔP:	0.626	In. H_2O
Stack Temperature, Ts:	94.6	°F
Meter Volume, Vm:	79.389	ft^3
Meter Volume, Vmstd:	76.722	dscf
Meter Volume, Vwstd:	1.168	wscf
Isokinetic Variance:	102.2	%I
Test Length	120.00	in mins.
Nozzle Diameter	0.239	in inches
Barometric Pressure	29.33	in Hg
Calculated Fo:	#DIV/0!	

STACK CONDITIONS

Static Pressure	-1.00	in. H_2O
Flue Pressure (Ps):	29.26	in. Hg. abs.
Carbon Dioxide:	0.00	%
Oxygen:	20.90	%
Nitrogen:	79.1	%
Gas Weight dry, Md:	28.836	lb/lb mole
Gas Weight wet, Ms:	28.673	lb/lb mole
Excess Air:	---	%
Gas Velocity, Vs:	36.538	fps
Volumetric Flow:	20,100	acfm
Volumetric Flow:	18,430	dscfm
Volumetric Flow:	18,710	scfm
Fo Validity:	#DIV/0!	

MOISTURE DETERMINATION

Initial Impinger Content:	2012.0	ml	Silica Initial Wt.	844.7	grams
Final Impinger Content:	2024.3	ml	Silica Final Wt.	857.2	grams
Impinger Difference:	12.3	ml	Silica Difference:	12.5	grams

Total Water Gain: 24.8 Moisture, Bws: 0.015 **Supersaturation Value, Bws: 0.056**

Port-Point No.	Clock Time	Velocity Head Δp in. H2O	Orifice ΔH in. H2O	Actual Meter Vol. ft^3	Stack Temp °F	Meter Temp Inlet °F	Meter Temp Outlet °F	Sqrt. Δp	Collected Vol. ft^3	Point Vel ft/sec
1-1	17:00:00	0.30	0.89	54.435	94	89	90	0.548	2.645	31.982
2	17:05:00	0.29	0.87	57.080	96	89	89	0.539	2.830	31.444
3	17:10:00	0.30	0.89	59.910	97	89	89	0.548	2.930	31.982
4	17:15:00	0.33	0.99	62.840	98	88	88	0.574	3.030	33.543
5	17:20:00	0.36	1.08	65.870	100	88	88	0.600	3.200	35.034
6	17:25:00	0.39	1.17	69.070	100	87	87	0.624	3.310	36.465
7	17:30:00	0.42	1.26	72.380	100	87	87	0.648	3.320	37.841
8	17:35:00	0.44	1.32	75.700	100	87	86	0.663	3.530	38.732
9	17:40:00	0.44	1.32	79.230	100	86	85	0.663	3.610	38.732
10	17:45:00	0.41	1.23	82.840	100	86	85	0.640	3.380	37.388
11	17:50:00	0.38	1.14	86.220	99	86	84	0.616	3.230	35.994
12	17:55:00	0.36	1.08	89.450	98	85	84	0.600	3.239	35.034
	18:00:00			92.689						
2-1	18:05:00	0.35	1.05	92.689	96	82	80	0.592	3.271	34.544
2	18:10:00	0.38	1.14	95.960	95	82	81	0.616	3.320	35.994
3	18:15:00	0.41	1.23	99.280	95	82	82	0.640	3.380	37.388
4	18:20:00	0.42	1.26	102.660	95	80	81	0.648	3.440	37.841
5	18:25:00	0.44	1.32	106.100	93	80	81	0.663	3.580	38.732
6	18:30:00	0.45	1.34	109.680	91	80	80	0.671	3.560	39.170
7	18:35:00	0.44	1.31	113.240	89	80	80	0.663	3.380	38.732
8	18:40:00	0.46	1.38	116.620	89	80	79	0.678	3.670	39.602
9	18:45:00	0.46	1.38	120.290	87	80	79	0.678	3.430	39.602
10	18:50:00	0.45	1.35	123.720	87	80	79	0.671	3.620	39.170
11	18:55:00	0.40	1.20	127.340	86	80	78	0.632	3.180	36.929
12	19:00:00	0.36	1.08	130.520	86	80	78	0.600	3.304	35.034
	19:05:00			133.824						
Total	2:00:00			79.389		83.9	83.3		79.389	
Average			1.18		94.6	83.6		0.626		
Min			0.87		86.0	78.0		0.539		
Max			1.38		100.0	90.0		0.678		

Isokinetic V5.0 2/3/14

Mostardi Platt

Behr Iron and Metal
Rockford, IL

Time	CO2 %	O2%	
8:39:00	0.23	18.73 cal	
8:40:00	7.66	12.76 cal	
8:41:00	10.07	11.98 cal	
8:42:00	**10.07**	**12** cal	
8:43:00	9.35	11.78 cal	
8:44:00	0.13	0.13 cal	
8:45:00	0.03	-0.04 cal	
8:46:00	**0.01**	**0.04** cal	
8:47:00	0.02	0.04 cal	
8:48:00	18.74	20.13 cal	
8:49:00	**18.78**	**22.02** cal	
8:50:00	18.82	22.05 cal	
8:51:00	14.28	21.72	Ambient air in box truck
8:52:00	0.02	20.82	Ambient air in box truck
8:53:00	0.02	20.83	Ambient air in box truck
8:54:00	0.03	20.82	Ambient air in box truck
8:56:00	0.13	20.76 Test 1	Blue Baghouse Stack
8:57:00	0.13	20.77 Test 1	Blue Baghouse Stack
8:58:00	0.13	20.76 Test 1	Blue Baghouse Stack
8:59:00	0.1	20.82 Test 1	Blue Baghouse Stack
9:01:00	0.09	20.83 Test 1	Blue Baghouse Sweeco
9:02:00	0.09	20.83 Test 1	Blue Baghouse Sweeco
9:03:00	0.09	20.84 Test 1	Blue Baghouse Sweeco
9:05:00	0.24	20.57 Test 1	Blue Baghouse Inlet
9:06:00	0.24	20.57 Test 1	Blue Baghouse Inlet
9:07:00	0.23	20.57 Test 1	Blue Baghouse Inlet
9:08:00	0.23	20.58 Test 1	Blue Baghouse Inlet
9:11:00	0.11	20.71 Test 1	TPU Baghouse Exhaust
9:12:00	0.11	20.72 Test 1	TPU Baghouse Exhaust
9:13:00	0.11	20.72 Test 1	TPU Baghouse Exhaust
9:14:00	0.1	20.72 Test 1	TPU Baghouse Exhaust
9:17:00	**0.04**	**0.1** cal	
9:18:00	0.09	0.1 cal	
9:19:00	3.03	5.4 cal	
9:20:00	9.56	12.05 cal	
9:21:00	9.99	12.1 cal	
9:22:00	9.98	12.07 cal	

Appendix F - Field Data Sheets

Isokinetic Sampling Cover Sheet

Test Engineer: MLIP
Test Technician: DJK

Plant Information

Run Number: #1
Test Location: Sweeco
Duct Shape: Circular or Rectangular
Flue Area: 1.396
Port Type: Nipple
Test Method: 29

Date: 10/7/15
Client Name: Behr
Length: — Width: — or Diameter: 16"
Upstream Diameters: 2.5
Port Length: 4"
Source Condition: Normal

Project Number: M154005
Plant Name: Behr Rockford
Downstream Diameters: >2
Port Diameter: 5"

Meter and Probe Data

Meter ID: CM08
Pitot ID: 1037
Nozzle Kit ID: 6
Probe Length: 3
Pre-Test Nozzle Leak Check: .002 @ 13 "Hg
Pre-Test Pitot Leak Check: .000 @ 4 "H_2O

Meter Y Value: .990
Pitot Coefficient: .84
Nozzle Diameter: .169
Probe Liner: Glass

ΔH Value: 1.500
Train Type: Hotbox
Filter Number/Weight: 8960 / .4409
Thimble Number/Weight: —
Post-Test Nozzle Leak Check: .002 @ 15 "Hg
Post-Test Pitot Leak Check: .000 @ 4 "H_2O

Traverse Data

Ports Sampled: 2
Total Points: 24

Points/Port: 12
Total Test Time: 120

Min/Point: 5
Sample Plane: Horizontal or Vertical

Stack Parameters

Barometric Pressure: 29.33
CO_2 %: / / / Avg. 0
Imp and/or silica balance Model and S/N: S10-37
Initial Imp. Volume or Weight: 1943.2
Initial Silica Weight: 817.3

Static Pressure: -5.0
O_2 %: / / / Avg. 20.9
Servomex Serial #: 0144021/3935
Final Imp. Volume or Weight: 1948.6
Final Silica Weight: 831.9

Determined by: Method 3 or Method 3A
Imp. Volume or Weight Gain: 5.4
Silica Weight Gain: 14.6

B

Comments:

Post-Test Nozzle Verification:

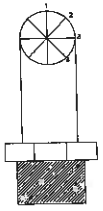

1) ✓ 2) ✓ 3) ✓ 4) ✓

Isokinetic Sampling Field Data Sheet

Project Number:	M154005	Date:	M154005	Test Number:	1
Client:	Behr	Test Location:	Sweeco	Operator:	MLTP Test Tech: OJK
Plant:	Behr Bockford	Test Method:	29	Page Number:	1 of 1

.528

Port-Point #.	Time	(ΔP)	×.726 Orifice Setting (ΔH)	Meter Volume (V_m) ft³, Actual	Square Root, ΔP	Meter Rate, Cubic Feet/Min.	×5 Theoretical Meter Volume, (V_m) ft³, per point	Theoretical Meter Volume, (V_m) ft³, total	Stack Temp, °F	Meter Temp Inlet, °F	Meter Temp Outlet, °F	Pump Vacuum, " Hg	Probe Temp. °F	Filter Temp. °F	Impinger Outlet Well Temp. °F
1-1	8:20	1.5	1.089	778.060	1.22	.646	3.233		65	61	61	4	249	252	57
2	8:25	1.1	.79	781.520	1.04	.553	2.768	781.293	67	63	61	4	248	248	60
3	8:30	1.6	1.16	784.320	1.26	.667	3.339	784.061	66	63	61	4	249	252	60
4	8:35	1.8	1.30	787.830	1.34	.708	3.541	787.400	66	67	62	5	250	250	58
5	8:40	1.7	1.23	791.210	1.30	.688	3.442	790.941	66	67	62	5	250	250	57
6	8:45	1.6	1.16	794.660	1.26	.667	3.339	794.383	66	69	64	5	250	254	56
7	8:50	1.4	1.01	798.010	1.18	.624	3.123	797.722	66	70	65	5	250	252	56
8	8:55	1.3	0.94	801.230	1.14	.602	3.010	800.845	66	73	66	5	250	249	56
9	9:00	1.2	0.87	804.000	1.09	.578	2.891	803.855	66	75	68	5	250	248	57
10	9:05	1.1	.79	807.110	1.04	.553	2.768	806.746	65	77	70	5	250	250	57
11	9:10	1.1	.79	809.930	1.04	.553	2.768	809.514	65	78	71	5	251	250	57
12	9:15	1.0	.72	812.670	1.0	.529	2.64	812.282	65	78	72	5	250	250	57
	9:20			814.948				814.922							
2-1	9:36	1.5	1.08	814.948	1.08	.646	3.233		70	80	78	5	249	249	61
2	9:41	1.4	1.01	818.340	1.18	.624	3.123	818.181	69	80	78	5	250	250	61
3	9:46	1.4	1.01	821.410	1.18	.624	3.123	821.304	69	82	79	5	249	251	56
4	9:51	1.4	1.01	824.690	1.18	.624	3.123	824.427	69	83	80	5	250	251	58
5	9:56	1.4	1.01	827.870	1.18	.624	3.123	827.550	69	82	80	5	250	250	59
6	10:01	1.3	0.94	830.940	1.14	.602	3.010	830.673	70	86	81	5	250	250	59
7	10:06	1.3	0.94	833.970	1.14	.602	3.010	833.683	70	86	81	5	251	251	59
8	10:11	1.2	0.87	836.850	1.09	.578	2.891	836.693	70	86	82	5	250	249	59
9	10:16	.98	0.72	839.610	.98	.522	2.613	839.584	70	89	84	5	250	249	59
10	10:21	.95	0.68	842.440	.97	.514	2.573	842.197	71	90	86	5	250	250	60
11	10:26	.93	0.67	844.950	.96	.509	2.545	844.770	71	90	86	5	250	250	60
12	10:31	.92	0.66	847.410	.95	.506	2.532	847.315	71	90	87	5	249	250	60
	10:36			850.105				849.847							

IMPINGER WEIGHT SHEET

PLANT: Behr Iron & Metal

UNIT NO: Blue Baghouse

LOCATION: Sweeco Exhaust

DATE: 10/7

TEST NO: 1 (B)

METHOD: 5/29

WEIGHED/MEASURED BY: MEP

BALANCE ID: S10-37

Circle One:	FINAL WEIGHT MLS / GRAMS	INITIAL WEIGHT MLS / GRAMS	IMPINGER GAIN	IMPINGER CONTENTS
IMPINGER 1	701.6	677.4		
IMPINGER 2	629.3	648.2		
IMPINGER 3	617.7	617.6		
IMPINGER 4	831.9	817.3		
IMPINGER 5				
IMPINGER 6				
IMPINGER 7				
IMPINGER 8				

	FINAL TOTAL	INITIAL TOTAL	TOTAL IMPINGER GAIN
IMPINGERS	1948.6	1943.2	5.4
SILICA			14.6

5.208 dscfm

Isokinetic Sampling Cover Sheet

Test Engineer: MLIP
Test Technician: DJK

Plant Information

Run Number: 2
Date: 10/7/15
Project Number: M154005
Test Location: Sweeco
Client Name: Behr
Plant Name: Behr Rockford
Duct Shape: Circular or Rectangular
Length: — Width: — or Diameter: 16"
Flue Area: 1.396
Upstream Diameters: 2.5
Downstream Diameters: 72
Port Type: Nipple
Port Length: 4"
Port Diameter: 6"
Test Method: 29
Source Condition: Normal

Meter and Probe Data

Meter ID: CM08
Meter Y Value: .990
ΔH Value: 1.500
Pitot ID: 1037
Pitot Coefficient: .84
Train Type: Hotbox
Nozzle Kit ID 6
Nozzle Diameter: .169
Filter Number/Weight: 8892
Probe Length: 3
Probe Liner: Glass
Thimble Number/Weight: —
Pre-Test Nozzle Leak Check: .0015 @ 12 "Hg
Post-Test Nozzle Leak Check: .0015 @ 13 "Hg
Pre-Test Pitot Leak Check: .000 @ 4 "H_2O
Post-Test Pitot Leak Check: .000 @ 4 "H_2O

Traverse Data

Ports Sampled: 2
Points/Port: 12
Min/Point: 5
Total Points: 24
Total Test Time: 120
Sample Plane: Horizontal or Vertical

Stack Parameters

Barometric Pressure: 29.33
Static Pressure: -5.0
CO_2 %: / / / Avg. 0
O_2 %: / / /Avg. 20.9
Determined by: Method 3 or Method 3A
Imp and/or silica balance Model and S/N: S10-37
Servomex Serial #: 0144001/3935
Initial Imp. Volume or Weight: 2103.8
Final Imp. Volume or Weight: 2114.2
Imp. Volume or Weight Gain: 10.4
Initial Silica Weight: 797.7
Final Silica Weight: 809.3
Silica Weight Gain: 11.6

Comments:

Post-Test Nozzle Verification:

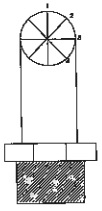

1) ✓ 2) ✓ 3) ✓ 4) ✓

Isokinetic Sampling Field Data Sheet

Project Number:	M154005	Date:	10/7/15	Test Number:	2
Client:	Behr	Test Location:	Sweco	Operator:	MLIP Test Tech: DJK
Plant:	Behr Rockford	Test Method:	M29	Page Number:	1 of 1

Port-Point #.	Time	(ΔP)	×.726 Orifice Setting (ΔH)	Meter Volume (V_m) ft^3, Actual	Square Root, ΔP	×.528 Meter Rate, Cubic Feet/Min.	5 Theoretical Meter Volume, (V_m) ft^3, per point	Theoretical Meter Volume, (V_m) ft^3, total	Stack Temp, °F	Meter Temp Inlet, °F	Meter Temp Outlet, °F	Pump Vacuum, " Hg	Probe Temp. °F	Filter Temp. °F	Impinger Outlet Well Temp. °F
1-1	11:35	1.7	1.23	850.251	1.30	.68	3.442	[illegible]	73	94	91	4	249	250	64
2	11:40	1.7	1.23	853.940	1.30	.68	3.442	853.69?	74	94	95	4	250	250	50
3	11:45	1.6	1.16	857.510	1.26	.66	3.339	857.135	74	96	95	4	250	250	51
4	11:50	1.5	1.08	860.770	1.22	.64	3.233	860.474	75	98	96	4	250	249	52
5	11:55	1.3	0.94	863.821	1.14	.60	3.010	863.707	75	99	97	4	251	251	55
6	12:00	1.2	0.87	866.950	1.09	.576	2.891	866.717	75	99	97	4	250	250	55
7	12:05	1.1	0.79	869.750	1.04	.553	2.768	869.608	75	99	98	4	250	250	57
8	12:10	1.1	0.79	872.400	1.04	.553	2.768	872.376	75	101	99	3	250	250	57
9	12:15	1.1	0.79	875.310	1.04	.553	2.768	875.144	75	101	99	3	250	250	57
10	12:20	1.0	0.72	878.220	1.00	.528	2.640	877.912	75	101	99	3	251	249	58
11	12:25	1.1	0.79	880.790	1.04	.553	2.768	880.552	75	101	99	3	250	250	56
12	12:30	1.1	0.79	883.560	1.04	.553	2.768	883.320	75	100	100	3	250	250	57
	12:35			886.210				886.088							
2-1	12:43	1.2	0.87	886.210	1.09	.578	2.891	[illegible]	75	100	100	3	250	250	63
2	12:48	1.3	0.94	889.260	1.14	.60	3.010	889.101	75	100	100	3	250	250	60
3	12:53	1.3	0.94	892.360	1.14	.60	3.010	892.111	75	100	99	3	250	250	57
4	12:58	1.4	1.01	895.370	1.18	.624	3.124	895.121	75	100	99	3	250	250	56
5	13:03	1.3	1.01	898.480	1.14	.60	3.010	898.245	75	99	99	3	250	250	59
6	13:08	1.3	0.94	901.300	1.14	.60	3.010	901.255	75	99	99	3	250	250	59
7	13:13	1.4	1.01	904.550	1.18	.624	3.124	904.265	75	99	99	3	250	249	59
8	13:18	1.4	1.01	907.600	1.18	.624	3.124	907.389	75	99	99	3	250	251	58
9	1323	1.4	1.01	910.820	1.18	.624	3.124	910.513	75	99	99	3	250	251	58
10	1328	1.4	1.01	913.840	1.18	.624	3.124	913.637	74	99	99	3	250	252	58
11	13:33	1.4	1.01	916.910	1.18	.624	3.124	916.761	74	99	99	4	251	251	58
12	13:38	1.4	1.01	920.100	1.18	.624	3.124	919.885	74	99	99	4	250	249	58
	13:43			923.223				923.009							

IMPINGER WEIGHT SHEET

PLANT: Behr Iron Metal

UNIT NO: Blue Baghouse

LOCATION: Sweeco Exhaust

DATE: 10/7/15

TEST NO: 2 (B)

METHOD: 5/29

WEIGHED/MEASURED BY: MEP

BALANCE ID: S10-37

Circle One:	FINAL WEIGHT MLS / GRAMS	INITIAL WEIGHT MLS / GRAMS	IMPINGER GAIN	IMPINGER CONTENTS
IMPINGER 1	741.0	735.5		
IMPINGER 2	729.2	724.8		
IMPINGER 3	644.0	643.5		
IMPINGER 4	809.3	797.7		
IMPINGER 5				
IMPINGER 6				
IMPINGER 7				
IMPINGER 8				

	FINAL TOTAL	INITIAL TOTAL	TOTAL IMPINGER GAIN
IMPINGERS	2114.2	2103.8	10.4
SILICA			11.6

Isokinetic Sampling Cover Sheet

Test Engineer: MLIR
Test Technician: DJK

Plant Information

Run Number: 3
Date: 10/7/15
Project Number: M154005
Test Location: Inlet Sweco
Client Name: Behr
Plant Name: Behr Rockford
Duct Shape: Circular or Rectangular
Length: — Width: — or Diameter: 16"
Flue Area: 1.396
Upstream Diameters: >5
Downstream Diameters: >2
Port Type: Nipple
Port Length: 4"
Port Diameter: 6"
Test Method: M29
Source Condition: Normal

Meter and Probe Data

Meter ID: CM.08
Meter Y Value: .990
ΔH Value: 1.500
Pitot ID: 1037
Pitot Coefficient: .84
Train Type: Hotbox
Nozzle Kit ID 6
Nozzle Diameter: .169
Filter Number/Weight: [redacted]
Probe Length: 3 feet
Probe Liner: Glass
Thimble Number/Weight: —
Pre-Test Nozzle Leak Check: .001 @ 10 "Hg
Post-Test Nozzle Leak Check: .001 @ 11 "Hg
Pre-Test Pitot Leak Check: .000 @ 4 "H_2O
Post-Test Pitot Leak Check: 000 @ 4 "H_2O

Traverse Data

Ports Sampled: 2
Points/Port: 12
Min/Point: 5
Total Points: 24
Total Test Time: 120
Sample Plane: Horizontal or Vertical

Stack Parameters

Barometric Pressure: 29.33
Static Pressure: -5.0
CO_2 %: / / / Avg. 0
O_2 %: / / /Avg. 20.9
Determined by: Method 3 or Method ~~3A~~
Imp and/or silica balance Model and S/N: S10-37
Servomex Serial #: 014401/3935
Initial Imp. Volume or Weight: 929.6
Final Imp. Volume or Weight: 1919.3
Imp. Volume or Weight Gain: 10.3
Initial Silica Weight: 839.9
Final Silica Weight: 851.4
Silica Weight Gain:

Comments:

Post-Test Nozzle Verification:

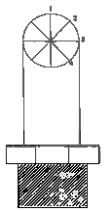

1) ✓ 2) ✓ 3) ✓ 4) ✓

Isokinetic Sampling Field Data Sheet

Project Number: M154005
Client: Behr
Plant: Behr Bedford

Date: 10/7/15
Test Location: Sweeco
Test Method: M29

Test Number: 3
Operator: MLSP Test Tech: DSK
Page Number: 1 of 1

Port-Point #.	Time	(ΔP)	×.726 Orifice Setting (ΔH)	Meter Volume (V_m) ft³, Actual	Square Root, ΔP	×.528 Meter Rate, Cubic Feet/Min.	×5 Theoretical Meter Volume, (V_m) ft³, per point	Theoretical Meter Volume, (V_m) ft³, total	Stack Temp, °F	Meter Temp Inlet, °F	Meter Temp Outlet, °F	Pump Vacuum, " Hg	Probe Temp. °F	Filter Temp. °F	Impinger Outlet Well Temp. °F
1-1	14:20	1.6	1.16	23.574	1.26	.667	3.339		77	95	97	5	250	250	60
2	14:25	1.6	1.16	27.110	1.26	.667	3.339	26.913	77	97	96	5	250	250	54
3	14:30	1.7	1.23	30.450	1.30	.688	3.442	30.252	77	97	97	5	250	250	54
4	14:35	1.7	1.23	33.890	1.30	.688	3.442	33.694	77	97	97	5	250	250	55
5	14:40	1.2	0.87	37.340	1.09	.578	2.891	37.136	77	97	97	5	250	250	56
6	14:45	1.2	0.87	40.320	1.09	.578	2.891	40.027	77	97	98	5	250	250	56
7	14:50	1.8	1.30	43.220	1.34	.708	3.541	42.918	77	99	99	5	250	250	55
8	14:55	1.8	1.30	46.530	1.34	.708	3.541	46.459	77	99	99	5	250	250	53
9	15:00	1.8	1.30	49.950	1.34	.708	3.541	50.000	77	98	98	5	254	249	53
10	15:05	1.7	1.23	53.660	1.30	.688	3.442	53.541	77	97	97	5	250	251	53
11	15:10	1.8	1.30	57.160	1.34	708	3.541	56.983	77	97	97	5	249	249	53
12	15:15	1.7	1.23	60.810	1.30	.688	3.442	60.524	77	97	97	5	250	252	54
	15:20			64.230				63.966							
2-1	15:28	1.3	0.94	64.230	1.14	.602	3.010		77	97	95	5	250	252	58
2	15:33	1.4	1.01	67.440	1.18	.624	3.123	67.240	77	97	96	5	250	251	54
3	15:38	1.4	1.01	70.550	1.18	.624	3.123	70.363	77	98	97	5	250	249	54
4	15:43	1.4	1.01	73.810	1.18	.624	3.123	73.486	77	98	97	5	250	249	54
5	15:48	1.4	1.01	76.590	1.18	.624	3.123	76.609	77	97	96	5	249	249	55
6	15:53	1.5	1.08	79.930	1.08	.648	3.233	79.732	77	97	96	5	251	250	55
7	15:58	1.5	1.08	82.960	1.08	.648	3.233	82.965	77	96	96	5	250	250	55
8	16:03	1.4	1.01	86.340	1.18	.624	3.123	86.198	77	96	96	4	249	251	55
9	16:08	1.4	1.01	89.410	1.18	.624	3.123	89.321	77	96	96	5	250	251	55
10	16:13	1.4	1.01	92.450	1.18	.624	3.123	92.444	77	96	96	5	249	250	55
11	16:18	1.4	1.01	95.630	1.18	.624	3.123	95.556	77	96	96	5	250	252	55
12	16:23	1.4	1.01	98.760	1.18	.624	3.123	98.690	77	96	96	5	250	251	55
	16:28			102.010				101.813							

IMPINGER WEIGHT SHEET

PLANT: Behr Iron & Metal

UNIT NO: Blue Baghouse

LOCATION: Sweeco exhaust

DATE: 10.7.15

TEST NO: 3 (B)

METHOD: 5/29

WEIGHED/MEASURED BY: MEP

BALANCE ID: S10-37

Circle One:	FINAL WEIGHT MLS / GRAMS	INITIAL WEIGHT MLS / GRAMS	IMPINGER GAIN	IMPINGER CONTENTS
IMPINGER 1	667.4	660.0		
IMPINGER 2	644.1	641.8		
IMPINGER 3	618.1	617.5		
IMPINGER 4	851.4	839.9		
IMPINGER 5				
IMPINGER 6				
IMPINGER 7				
IMPINGER 8				

	FINAL TOTAL	INITIAL TOTAL	TOTAL IMPINGER GAIN
IMPINGERS	1929.6	1919.3	10.3
SILICA			11.5

Isokinetic Sampling Cover Sheet

Test Engineer: MLIP
Test Technician: DJK

Plant Information

Run Number: 4
Test Location: Inlet Sweeco
Duct Shape: Circular or Rectangular
Flue Area: 1.396
Port Type: Nipple
Test Method: M25

Date: 10/7/15
Client Name: Behr
Length: — Width: — or Diameter: 16"
Upstream Diameters: >.5
Port Length: 4"
Source Condition: Normal

Project Number: M154025
Plant Name: Behr Rockford
Downstream Diameters: >2
Port Diameter: 6"

Meter and Probe Data

Meter ID: CM08
Pitot ID: 1037
Nozzle Kit ID: 6
Probe Length: 3 feet
Pre-Test Nozzle Leak Check: .001 @ 14 "Hg
Pre-Test Pitot Leak Check: .000 @ 4 "H_2O

Meter Y Value: 0.990
Pitot Coefficient: .84
Nozzle Diameter: .169
Probe Liner: Glass

ΔH Value: 1.500
Train Type: Hot box
Filter Number/Weight: 8890
Thimble Number/Weight: —
Post-Test Nozzle Leak Check: .001 @ 15 "Hg
Post-Test Pitot Leak Check: .000 @ 4 "H_2O

Traverse Data

Ports Sampled: 2
Total Points: 24

Points/Port: 12
Total Test Time: 120

Min/Point: 5
Sample Plane: Horizontal or Vertical

Stack Parameters

Barometric Pressure: 29.33
CO_2 %: / / / Avg. 0
Imp and/or silica balance Model and S/N: S10-37
Initial Imp. Volume or Weight: 2106.6
Initial Silica Weight: 800.1

Static Pressure: -5.0
O_2 %: / / / Avg. 20.9
Servomex Serial #: 0144001/3935
Final Imp. Volume or Weight: 2115.9
Final Silica Weight: 874.9

Determined by: Method 3 or Method 3A
Imp. Volume or Weight Gain: 9.3
Silica Weight Gain: 74.8

Comments:

Post-Test Nozzle Verification:

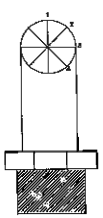

1) ✓ 2) ✓ 3) ✓ 4) ✓

Isokinetic Sampling Field Data Sheet

Project Number:	M154025	Date:	10/7/15	Test Number:	4
Client:	Behr	Test Location:	Inlet Sweeco	Operator:	MLIP Test Tech: DJK
Plant:	Behr Rockford	Test Method:	M29	Page Number:	1 of 1

Port-Point #.	Time	(ΔP)	Orifice Setting (ΔH) (×.726)	Meter Volume (V_m) ft^3, Actual	Square Root, ΔP	Meter Rate, Cubic Feet/Min. (×.528)	Theoretical Meter Volume, (V_m) ft^3, per point (5)	Theoretical Meter Volume, (V_m) ft^3, total	Stack Temp, °F	Meter Temp Inlet, °F	Meter Temp Outlet, °F	Pump Vacuum, " Hg	Probe Temp. °F	Filter Temp. °F	Impinger Outlet Well Temp. °F
1-1	17:00	3.3	2.39	004.610	1.81	.959	4.795		73	89	88	7	249	252	55
2	17:05	3.5	2.54	9.560	1.87	.987	4.936	9.405	73	89	88	7	250	250	57
3	17:10	3.5	2.54	14.420	1.87	.987	4.936	14.341	74	89	88	9	247	254	57
4	17:15	3.5	2.54	18.370	1.87	.987	4.936	18.277	74	89	88	10	249	249	58
5	17:20	3.3	2.39	23.460	1.81	.959	4.795	23.213	76	90	87	10	250	250	58
6	17:25	3.3	2.39	28.000	1.81	.959	4.795	28.008	78	90	87	10	250	249	58
7	17:30	3.4	2.46	32.990	1.84	.973	4.867	32.803	79	90	87	10	251	251	57
8	17:35	3.2	2.32	37.780	1.78	.944	4.722	37.670	80	90	87	10	250	250	57
9	17:40	2.7	1.96	42.610	1.64	.867	4.337	42.392	80	90	87	10	250	249	57
10	17:45	2.4	1.74	47.020	1.54	.817	4.089	46.729	80	90	87	10	250	250	56
11	17:50	2.4	1.74	50.890	1.54	.817	4.089	50.818	77	89	85	7	250	250	56
12	17:55	2.0	1.45	55.160	1.41	.746	3.733	54.907	77	89	85	7	250	249	56
	18:00			58.790				58.640							
2-1	18:05	3.0	2.17	58.790	1.73	.914	4.572		76	85	83	7	250	250	54
2	18:10	3.0	2.17	63.490	1.73	.914	4.572	63.362	76	85	84	7	250	250	54
3	18:15	2.0	1.45	68.220	1.41	.746	3.733	67.934	77	86	85	7	249	250	54
4	18:20	2.2	1.59	71.810	1.48	.781	3.907	71.667	77	86	85	7	250	250	54
5	18:25	2.0	1.45	76.000	1.41	.746	3.733	75.574	77	86	85	5	251	251	54
6	18:30	2.1	1.52	79.810	1.44	.765	3.825	79.307	75	86	85	5	250	250	54
7	18:35	1.5	1.089	83.450	1.22	.646	3.233	83.132	74	85	84	5	250	250	53
8	18:40	1.4	1.01	86.560	1.18	.624	3.123	86.365	74	85	84	5	249	249	53
9	18:45	1.4	1.01	89.260	1.18	.624	3.123	89.246	73	84	83	5	250	250	52
10	18:50	1.4	1.01	92.440	1.18	.624	3.123	92.369	73	83	82	5	250	253	52
11	18:55	.92	.66	95.710	.95	.506	2.532	95.492	73	83	82	5	250	253	52
12	19:00	.92	.66	98.320	.95	.506	2.532	98.024	73	82	81	5	250	250	51
	19:05			100.830				100.556							

IMPINGER WEIGHT SHEET

PLANT: Behr Iron & Metal

UNIT NO: Blue Baghouse

LOCATION: Sweeco Exhaust

DATE: 10.7.15

TEST NO: 4 (B)

METHOD: 5/29

WEIGHED/MEASURED BY: MEP

BALANCE ID: S10-37

Circle One:	FINAL WEIGHT MLS / GRAMS	INITIAL WEIGHT MLS / GRAMS	IMPINGER GAIN	IMPINGER CONTENTS
IMPINGER 1	747.8	743.2		
IMPINGER 2	724.5	719.8		
IMPINGER 3	643.6	643.6		
IMPINGER 4	814.9	800.1		
IMPINGER 5				
IMPINGER 6				
IMPINGER 7				
IMPINGER 8				

	FINAL TOTAL	INITIAL TOTAL	TOTAL IMPINGER GAIN
IMPINGERS	2151.9	2106.6	9.3
SILICA			14.8

Isokinetic Sampling Cover Sheet

Test Engineer: BPT
Test Technician: NSC

Plant Information

Run Number: 1
Date: 10-7-13
Project Number: M154005
Test Location: Baghouse inlet
Client Name: RK & Associates, Inc.
Plant Name: Behr Iron & Metal Rockford
Duct Shape: Circular or Rectangular
Length: — Width: — or Diameter: 2.625
Flue Area: 5.412
Upstream Diameters: 12.5"
Downstream Diameters: 62"
Port Type: nipple
Port Length: 4.5"
Port Diameter: 4.5"
Test Method: 5/29
Source Condition: Normal

Meter and Probe Data

Meter ID: CM29
Meter Y Value: 0.991
ΔH Value: 1.668
Pitot ID: 072A
Pitot Coefficient: 0.84
Train Type: Hot Box
Nozzle Kit ID: Teflon #9
Nozzle Diameter: .271
Filter Number/Weight: 8756 / 0.4426
Probe Length: 5 ft
Probe Liner: Glass
Thimble Number/Weight: N/A
Pre-Test Nozzle Leak Check: 0.001 @ 13 "Hg
Post-Test Nozzle Leak Check: 0.001 @ 8 "Hg
Pre-Test Pitot Leak Check: ✓ @ 3.3 "H_2O
Post-Test Pitot Leak Check: ✓ @ 3.5 "H_2O

Traverse Data

Ports Sampled: 2
Points/Port: 12
Min/Point: 5
Total Points: 24
Total Test Time: 120
Sample Plane: Horizontal or Vertical

Stack Parameters

Barometric Pressure: 29.33
Static Pressure: -5.5
CO_2 %: / / / Avg. 0
O_2 %: / / /Avg. 20.9
Determined by: Method 3 or Method 3A
Imp and/or silica balance Model and S/N: SO-37
Servomex Serial #: 0144001/3935
Initial Imp. Volume or Weight: 2164
Final Imp. Volume or Weight: 2170.5
Imp. Volume or Weight Gain: 6.5
Initial Silica Weight: 823.3
Final Silica Weight: 833.5
Silica Weight Gain: 10.2

Comments:

Post-Test Nozzle Verification:

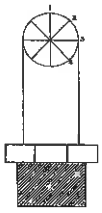

1) ✓ 2) ✓ 3) ✓ 4) ✓

Isokinetic Sampling Field Data Sheet

Project Number:	M154005	Date:	10-7-15	Test Number:	1
Client:	RK & Associates Inc.	Test Location:	Baghouse Inlet	Operator:	BPT Test Tech: NCC
Plant:	Behr Iron & Metal Rockford	Test Method:	5/29	Page Number:	1 of 1

5.325 1.358

Port-Point #	Time	(ΔP)	Orifice Setting (ΔH)	Meter Volume (V_m) ft^3, Actual	Square Root, ΔP	Meter Rate, Cubic Feet/Min.	Theoretical Meter Volume, (V_m) ft^3, per point	Theoretical Meter Volume, (V_m) ft^3, total	Stack Temp, °F	Meter Temp Inlet, °F	Meter Temp Outlet, °F	Pump Vacuum, " Hg	Probe Temp. °F	Filter Temp. °F	Impinger Outlet Well Temp. °F
Side 1-1	0820	.33	1.74	26.955	.574		3.86		86	59	60	2	251	250	60
-2	0825	.33	1.74	30.93	.574		3.86	30.815	85	59	63	1	251	250	59
-3	0830	.32	1.68	34.72	.566		3.81	34.645	85	60	65	1	252	249	61
-4	0835	.27	1.42	38.49	.52		3.50	38.450	86	61	67	1	253	249	61
-5	0840	.20	1.05	42.03	.447		3.02	41.952	88	62	68	1	254	250	61
-6	0845	.20	1.05	45.09	.447		3.02	44.971	88	63	68	1	253	252	60
-7	0850	.32	2.30	48.09	.728		4.93	47.996	89	64	69	4	255	250	62
-8	0855	.54	2.86	52.95	.735		4.99	52.930	91	65	71	4	254	251	62
-9	0900	.54	2.86	57.93	.735		4.99	57.920	91	66	72	4	254	249	62
-10	0905	.58	3.08	62.96	.762		5.19	62.919	91	67	73	5	253	251	64
-11	0910	.68	3.62	68.14	.825		5.631	68.110	91	68	74	6	254	250	64
-12	0915	.37	1.98	73.77	.608		4.165	73.741	92	69	76	2	253	250	65
	0920			77.996				77.907							
2-1	0937	.52	2.77	77.996	.721		4.934		93	72	72	4	251	252	62
-2	0942	.47	2.50	82.97	.686		4.69	82.930	93	72	75	4	248	251	63
-3	0947	.47	2.50	87.71	.686		4.69	87.62	94	73	77	4	249	250	63
-4	0952	.37	1.89	92.32	.608		4.089	92.319	95	75	79	4	250	251	63
-5	0957	.34	1.74	96.10	.583		3.92	96.08	95	75	79	4	250	251	63
-6	1002	.19	.97	100.02	.436		2.933	100.001	95	76	79	1	251	250	63
-7	1007	.12	.61	102.94	.346		2.327	102.934	95	77	76	1	250	251	63
-8	1012	.21	1.07	105.31	.458		3.081	105.261	94	77	76	1	250	251	64
-9	1017	.15	.76	108.40	.387		2.599	108.342	95	76	78	2	250	250	64
Top -10	1022	.18	.93	110.98	.424		2.865	110.940	92	77	79	2	248	250	64
-11	1027	.22	1.15	113.92	.469		3.191	113.806	84	77	79	1	250	252	64
-12	1032	.19	.97	117.02	.436		2.933	116.997	85	78	80	1	251	251	65
	1037			120.035				119.965							

IMPINGER WEIGHT SHEET

PLANT: Behr

UNIT NO: Blue Baghouse

LOCATION: Inlet

DATE: 10/7

TEST NO: 1 (C)

METHOD: 5/29

WEIGHED/MEASURED BY: MEP

BALANCE ID: 510-37

Circle One:	FINAL WEIGHT MLS / GRAMS	INITIAL WEIGHT MLS / GRAMS	IMPINGER GAIN	IMPINGER CONTENTS
IMPINGER 1	707.0	702.9		
IMPINGER 2	749.0	748.2		
IMPINGER 3	714.5	712.9		
IMPINGER 4	833.5	813.3		
IMPINGER 5				
IMPINGER 6				
IMPINGER 7				
IMPINGER 8				

	FINAL TOTAL	INITIAL TOTAL	TOTAL IMPINGER GAIN
IMPINGERS	2170.5	2164.0	6.5
SILICA			20.2

9,959 lbs/hr

Isokinetic Sampling Cover Sheet

Test Engineer: BPT
Test Technician: NCC

Plant Information

Run Number: 2
Test Location: Baghouse Inlet
Duct Shape: Circular or Rectangular
Flue Area: 5.412
Port Type: nipple
Test Method: 5/29

Date: 10-7-15
Client Name: PK & Associates Inc.
Length: — Width: — or Diameter: 2.625
Upstream Diameters: 12.5"
Port Length: 4.5"
Source Condition: Normal

Project Number: M154005
Plant Name: Behr Iron & Metal Rockford
Downstream Diameters: 6.2"
Port Diameter: 4.5"

Meter and Probe Data

Meter ID: CM29
Pitot ID: 072A
Nozzle Kit ID Teflon #9
Probe Length: 5 ft
Pre-Test Nozzle Leak Check: 0.001 @ 8 "Hg
Pre-Test Pitot Leak Check: ✓ @ 3.2 "H_2O

Meter Y Value: 0.991
Pitot Coefficient: 0.84
Nozzle Diameter: .271
Probe Liner: Glass
Post-Test Nozzle Leak Check: 0.001 @ 12 "Hg
Post-Test Pitot Leak Check: ✓ @ 3.3 "H_2O

ΔH Value: 1.668
Train Type: Hot Box
Filter Number/Weight: 88251
Thimble Number/Weight: N/A

Traverse Data

Ports Sampled: 2
Total Points: 24

Points/Port: 12
Total Test Time: 120

Min/Point: 5
Sample Plane: Horizontal or Vertical

Stack Parameters

Barometric Pressure: 29.33
CO_2 %: / / / Avg. 0
Imp and/or silica balance Model and S/N: S10-57
Initial Imp. Volume or Weight: 1943.7
Initial Silica Weight: 820.1

Static Pressure: -5.5
O_2 %: / / / Avg. 20.9
Final Imp. Volume or Weight: 1955.9
Final Silica Weight: 837.1

Determined by: Method 3 or Method 3A
Servomex Serial #: 0144001 13935
Imp. Volume or Weight Gain: 12.2
Silica Weight Gain: 17.0

Comments:

Post-Test Nozzle Verification:

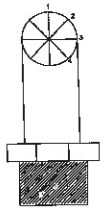

1) ✓ 2) ✓ 3) ✓ 4) ✓

Isokinetic Sampling Field Data Sheet

Project Number: M154005 | Date: 10-7-18 | Test Number: 2

Client: RK & Associates Inc | Test Location: Baghouse Inlet | Operator: BPT | Test Tech: NCC

Plant: Behr Iron & Metal Rockford | Test Method: 5/29 | Page Number: 1 of 1

Port-Point #.	Time	(ΔP)	Orifice Setting (ΔH)	Meter Volume (V_m) ft^3, Actual	Square Root, ΔP	Meter Rate, Cubic Feet/ Min.	Theoretical Meter Volume, (V_m) ft^3, per point	Theoretical Meter Volume, (V_m) ft^3, total	Stack Temp, °F	Meter Temp Inlet, °F	Meter Temp Outlet, °F	Pump Vacuum, " Hg	Probe Temp. °F	Filter Temp. °F	Impinger Outlet Well Temp. °F
1-1	1135	.48	2.41	20.448	.693		4.652		112	85	84	3	251	248	61
-2	1140	.49	2.41	25.13	.700		4.657	25.100	126	86	86	3	249	250	59
-3	1145	.47	2.33	29.86	.686		4.589	29.757	121	86	88	3	249	247	60
-4	1150	.42	2.10	34.44	.648		4.349	34.346	119	87	88	3	247	249	60
-5	1155	.35	1.74	38.71	.592		3.970	38.695	120	87	89	3	251	250	60
-6	1200	.26	1.30	42.63	.510		3.431	42.665	118	88	89	2	250	250	61
-7	1205	.11	.55	46.18	.332		2.230	46.096	119	88	89	1	251	252	59
-8	1210	.14	.70	48.50	.374		2.518	48.326	117	88	88	1	250	250	58
-9	1215	.13	.65	51.05	.361		2.424	50.844	118	89	87	1	250	250	57
-10	1220	.17	.86	53.46	.412		2.784	53.268	111	88	86	1	248	250	59
-11	1225	.19	.97	56.10	.436		2.951	56.052	107	87	86	1	247	250	59
-12	1230	.20	1.02	59.10	.447		3.038	59.002	103	87	86	1	250	250	60
	1235			62.093				62.040							
2-1	1243	.32	1.62	62.093	.566		3.815		105	84	83	1	255	254	61
-2	1248	.33	1.67	65.94	.574		3.867	65.908	107	84	83	1	255	252	61
-3	1253	.33	1.67	69.77	.574		3.891	69.775	100	83	84	1	252	252	61
-4	1258	.30	1.53	73.67	.548		3.697	73.667	102	82	83	1	252	249	62
-5	1303	.23	1.16	77.41	.480		3.226	77.363	107	82	84	1	255	250	62
-6	1308	.25	1.28	80.67	.500		3.381	80.589	100	82	83	1	255	251	62
-7	1313	.55	2.82	84.14	.742		5.019	83.970	98	81	83	3	256	251	63
-8	1318	.57	2.93	89.00	.755		5.123	88.969	97	82	84	4	252	251	63
-9	1323	.58	2.99	94.10	.762		5.177	94.112	96	82	85	4	254	251	64
-10	1328	.70	3.61	99.31	.837		5.693	99.289	96	82	86	5	254	250	64
-11	1333	.59	3.08	104.98	.768		5.255	104.983	91	82	87	4	253	250	64
-12	1338	.71	3.69	110.20	.843		5.765	110.238	93	83	88	6	251	250	65
	1343			116.065				116.003							

Top

Side

IMPINGER WEIGHT SHEET

PLANT: Behr Iron + Metal

UNIT NO: Blue Baghouse

LOCATION:

DATE: 10/7

TEST NO: 2 (C)

METHOD: 5/29

WEIGHED/MEASURED BY: MEP

BALANCE ID: 510-37

Circle One:	FINAL WEIGHT MLS / GRAMS	INITIAL WEIGHT MLS / GRAMS	IMPINGER GAIN	IMPINGER CONTENTS
IMPINGER 1	728.0	722.6		
IMPINGER 2	612.1	607.3		
IMPINGER 3	615.8	613.8		
IMPINGER 4	837.1	820.1		
IMPINGER 5				
IMPINGER 6				
IMPINGER 7				
IMPINGER 8				

	FINAL TOTAL	INITIAL TOTAL	TOTAL IMPINGER GAIN
IMPINGERS	1955.9	1943.7	12.2
SILICA			17.0

Isokinetic Sampling Cover Sheet

Test Engineer: BPT
Test Technician: NCC

Plant Information

Run Number: 3
Date: 10-7-15
Project Number: M1524005
Test Location: Baghouse Inlet
Client Name: RK & Associates Inc.
Plant Name: Berk Iron & Metal Rockford
Duct Shape: Circular or Rectangular
Length: — Width: — or Diameter: 2.625
Flue Area: 5.412
Upstream Diameters: 12.5"
Downstream Diameters: 62"
Port Type: nipple
Port Length: 4.5"
Port Diameter: 4.5"
Test Method: 5/29
Source Condition: Normal

Meter and Probe Data

Meter ID: CM29
Meter Y Value: 0.991
ΔH Value: 1.668
Pitot ID: 072A
Pitot Coefficient: 0.84
Train Type: Hot Box
Nozzle Kit ID: Teflon #9
Nozzle Diameter: .271
Filter Number/Weight: 87341
Probe Length: 5 ft
Probe Liner: Glass
Thimble Number/Weight: N/A
Pre-Test Nozzle Leak Check: 0.003 @ 9 "Hg
Post-Test Nozzle Leak Check: 0.002 @ 7.5 "Hg
Pre-Test Pitot Leak Check: ✓ @ 3.4 "H_2O
Post-Test Pitot Leak Check: ✓ @ 3.1 "H_2O

Traverse Data

Ports Sampled: 2
Points/Port: 12
Min/Point: 5
Total Points: 24
Total Test Time: 120
Sample Plane: Horizontal or Vertical

Stack Parameters

Barometric Pressure: 29.33
Static Pressure: -5.5
CO_2 %: / / / Avg. 0
O_2 %: / / / Avg. 20.9
Determined by: Method 3 or Method 3A
Imp and/or silica balance Model and S/N: 500-37
Servomex Serial #: 014400/13935
Initial Imp. Volume or Weight: 2205.7
Final Imp. Volume or Weight: 2192
Imp. Volume or Weight Gain: 13.7
Initial Silica Weight: 820.7
Final Silica Weight: 835.8
Silica Weight Gain: 15.1

Comments:

Post-Test Nozzle Verification:

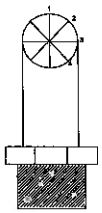

1) ✓ 2) ✓ 3) ✓ 4) ✓

Isokinetic Sampling Field Data Sheet

Project Number: M154005 | Date: 10-7-15 | Test Number: 3

Client: R&K Associates Inc | Test Location: Baghouse Inlet | Operator: BPT | Test Tech: NCC

Plant: Behr Iron & Metal Rockford | Test Method: 5/29 | Page Number: 1 of 1

Port-Point #.	Time	(ΔP)	Orifice Setting (ΔH)	Meter Volume (V_m) ft³, Actual	Square Root, ΔP	Meter Rate, Cubic Feet/ Min.	Theoretical Meter Volume, (V_m) ft³, per point	Theoretical Meter Volume, (V_m) ft³, total	Stack Temp, °F	Meter Temp Inlet, °F	Meter Temp Outlet, °F	Pump Vacuum, " Hg	Probe Temp. °F	Filter Temp. °F	Impinger Outlet Well Temp. °F
1-1	1420	.49	2.52	16.505	.700		4.745		94	81	81	3	251	252	50
-2	1425	.51	2.62	21.30	.714		4.842	21.250	96	81	83	4	250	250	49
-3	1430	.50	2.57	26.27	.707		4.790	26.092	99	81	85	4	250	251	53
-4	1435	.43	2.19	31.00	.656		4.434	30.882	103	82	86	3	250	248	54
-5	1440	.35	1.78	35.35	.592		3.990	35.316	104	82	84	2	247	250	52
-6	1445	.28	1.41	39.11	.529		3.549	39.306	109	81	84	2	245	249	52
-7	1450	.18	.90	42.84	.424		2.843	42.855	110	81	84	1	251	250	54
-8	1455	.12	.60	45.70	.346		2.315	45.699	112	81	83	1	250	253	54
-9	1500	.16	.81	48.03	.400		2.685	48.014	107	81	83	1	252	249	56
-10	1505	.18	.90	51.27	.424		2.853	50.699	104	81	82	1	250	250	57
-11	1510	.17	.87	53.45	.412		2.785	53.553	100	81	83	1	251	251	57
-12	1515	.19	.97	56.31	.436		2.939	56.338	102	81	83	1	254	252	57
	1520			59.340				59.277							
2-1	1528	.34	1.72	59.340	.583		3.914		105	81	81	2	255	253	52
-2	1533	.33	1.66	63.19	.574		3.853	63.254	107	81	82	2	253	255	50
-3	1538	.33	1.66	67.10	.574		3.853	67.107	108	81	83	2	252	254	50
-4	1543	.28	1.42	71.18	.529		3.572	70.961	104	81	86	1	251	254	50
-5	1548	.22	1.11	74.63	.469		3.157	74.532	106	81	85	1	250	252	52
-6	1553	.24	1.21	77.75	.490		3.295	77.690	107	82	84	1	248	252	52
-7	1558	.55	2.78	81.01	.742		4.988	80.985	105	81	83	4	248	251	53
-8	1603	.60	3.04	85.92	.775		5.224	85.972	104	81	85	5	250	251	55
-9	1608	.59	3.0	91.13	.768		5.185	91.196	105	81	87	5	255	241	56
-10	1613	.64	3.24	96.38	.800		5.396	96.381	107	81	88	5	253	247	56
-11	1618	.62	3.13	101.77	.787		5.311	101.776	110	82	90	5	253	250	56
-12	1623	.39	1.98	107.16	.624		4.224	107.088	108	83	90	3	252	250	57
	1628			111.341				111.311							

Top

Side

IMPINGER WEIGHT SHEET

PLANT: Behr Iron & Metal

UNIT NO: Blue Baghouse

LOCATION: Inlet

DATE: 10/7/15

TEST NO: 3 (C)

METHOD: 5/29

WEIGHED/MEASURED BY: MEP

BALANCE ID: 510-37

Circle One:	FINAL WEIGHT MLS / GRAMS	INITIAL WEIGHT MLS / GRAMS	IMPINGER GAIN	IMPINGER CONTENTS
IMPINGER 1	729.9	720.2		
IMPINGER 2	761.3	758.0		
IMPINGER 3	714.5	713.8		
IMPINGER 4	835.8	820.7		
IMPINGER 5				
IMPINGER 6				
IMPINGER 7				
IMPINGER 8				

	FINAL TOTAL	INITIAL TOTAL	TOTAL IMPINGER GAIN
IMPINGERS	2205.7	2192	13.7
SILICA			15.1

Isokinetic Sampling Cover Sheet

Test Engineer: BPT
Test Technician: NCC

Plant Information

Run Number: 4
Date: 10-7-15
Project Number: M154005
Test Location: Baghouse Inlet
Client Name: RK & Associates Inc.
Plant Name: Behr Iron & Metals Rockford
Duct Shape: Circular or Rectangular
Length: _____ Width: _____ or Diameter: 2.625
Flue Area: 5.412
Upstream Diameters: 12.5"
Downstream Diameters: 62"
Port Type: nipple
Port Length: 4.5"
Port Diameter: 4.5"
Test Method: 5/29
Source Condition: Normal

Meter and Probe Data

Meter ID: CM29
Meter Y Value: 0.991
ΔH Value: 1.668
Pitot ID: 072A
Pitot Coefficient: 0.84
Train Type: Hot Box
Nozzle Kit ID: Teflon #9
Nozzle Diameter: .271
Filter Number/Weight: 8832
Probe Length: 5 ft
Probe Liner: Glass
Thimble Number/Weight: N/A
Pre-Test Nozzle Leak Check: 0.001 @ 8 "Hg
Post-Test Nozzle Leak Check: 0.002 @ 10 "Hg
Pre-Test Pitot Leak Check: ✓ @ 3.3 "H_2O
Post-Test Pitot Leak Check: ✓ @ 3.5 "H_2O

Traverse Data

Ports Sampled: 2
Points/Port: 12
Min/Point: 5
Total Points: 24
Total Test Time: 120
Sample Plane: Horizontal or Vertical

Stack Parameters

Barometric Pressure: 29.33
Static Pressure: -5.5
CO_2 %: ____/____/____/ Avg. 0
O_2 %: ____/____/____/Avg. 20.9
Determined by: Method 3 or Method 3A
Imp and/or silica balance Model and S/N: S10-37
Servomex Serial #: 0144001/3935
Initial Imp. Volume or Weight: 1941.1
Final Imp. Volume or Weight: 1956.3
Imp. Volume or Weight Gain: 15.2
Initial Silica Weight: 829.9
Final Silica Weight: 844.4
Silica Weight Gain: 14.5

Comments:

Post-Test Nozzle Verification:

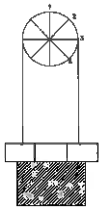

1) ✓ 2) ✓ 3) ✓ 4) ✓

Isokinetic Sampling Field Data Sheet

Project Number: M154005 | Date: 10-7-15 | Test Number: 4

Client: RK & Associates Inc. | Test Location: Baghouse Inlet | Operator: BPT | Test Tech: NCC

Plant: Behr Iron & Metal Rockford | Test Method: 5/29 | Page Number: 1 of 1

Port-Point #.	Time	(ΔP)	Orifice Setting (ΔH)	Meter Volume (V_m) ft^3, Actual	Square Root, ΔP	Meter Rate, Cubic Feet/Min.	Theoretical Meter Volume, (V_m) ft^3, per point	Theoretical Meter Volume, (V_m) ft^3, total	Stack Temp, °F	Meter Temp Inlet, °F	Meter Temp Outlet, °F	Pump Vacuum, " Hg	Probe Temp. °F	Filter Temp. °F	Impinger Outlet Well Temp. °F
1-1	1700	.52	2.58	11.555	.721		4.798		115	81	81	6	250	250	48
-2	1705	.49	2.44	16.32	.700		4.675	16.353	114	81	84	6	250	250	47
-3	1710	.51	2.54	21.00	.714		4.774	21.029	115	82	85	6	250	249	48
-4	1715	.43	2.15	25.73	.656		4.395	25.803	113	82	86	6	250	251	49
-5	1720	.36	1.79	30.20	.600		4.011	30.198	117	83	86	5	252	251	50
-6	1725	.29	1.44	34.21	.539		3.591	34.209	119	83	85	3	251	250	51
-7	1730	.21	1.04	37.87	.458		3.053	37.800	118	82	84	2	251	250	51
-8	1735	.15	.75	41.08	.387		2.586	40.853	113	82	82	1	251	252	51
-9	1740	.13	.65	43.52	.361		2.410	43.439	110	81	81	1	252	256	51
-10	1745	.17	.84	46.06	.412		2.741	45.849	114	80	80	1	250	251	51
-11	1750	.20	1.0	48.75	.447		2.986	48.590	108	80	79	1	250	250	51
-12	1755	.19	.96	51.73	.436		2.915	51.576	104	79	78	1	250	249	52
	1800			54.543				54.491							
2-1	1805	.31	1.55	54.543	.557		3.707		105	77	76	3	250	250	49
-2	1810	.29	1.46	58.31	.539		3.555	58.250	103	77	77	3	250	251	46
-3	1815	.30	1.51	61.94	.548		3.659	61.844	101	76	77	3	250	257	46
-4	1820	.26	1.31	65.57	.510		3.406	65.503	99	75	76	2	250	255	46
-5	1825	.21	1.07	69.07	.458		3.072	68.910	95	75	76	1	252	255	46
-6	1830	.23	1.17	72.15	.480		3.206	71.982	97	75	75	1	251	256	46
-7	1835	.57	2.88	75.33	.755		5.029	75.188	99	74	74	6	251	252	47
-8	1840	.63	3.19	80.41	.794		5.302	80.218	98	74	76	7	253	250	47
-9	1845	.60	3.04	85.47	.775		5.179	85.52	96	73	76	7	250	250	47
-10	1850	.58	2.95	90.52	.762		5.091	90.699	94	72	75	7	256	250	47
-11	1855	.65	3.30	95.71	.806		5.39	95.790	94	72	75	7	255	253	46
-12	1900	.65	3.30	101.17	.806		5.39	101.180	92	71	74	7	254	253	48
	1905			106.613				106.569							

Top

side

IMPINGER WEIGHT SHEET

PLANT: Behr Iron & Metal

UNIT NO: Blue Baghouse

LOCATION: Inlet

DATE: 10.7.15

TEST NO: 4 (C)

METHOD: 5/29

WEIGHED/MEASURED BY: MEP

BALANCE ID: 510-37

Circle One:	FINAL WEIGHT MLS / GRAMS	INITIAL WEIGHT MLS / GRAMS	IMPINGER GAIN	IMPINGER CONTENTS
IMPINGER 1	725.4	714.5		
IMPINGER 2	616.2	612.0		
IMPINGER 3	614.9	614.6		
IMPINGER 4	844.4	829.9		
IMPINGER 5				
IMPINGER 6				
IMPINGER 7				
IMPINGER 8				

	FINAL TOTAL	INITIAL TOTAL	TOTAL IMPINGER GAIN
IMPINGERS	1956.3	1941.1	15.2
SILICA			14.5

Isokinetic Sampling Cover Sheet

Test Engineer: MDK
Test Technician: KOJ

Plant Information

Run Number: 1
Date: 10-7-15
Project Number: M154005
Test Location: Blue Baghouse Stack
Client Name: RK Associates Inc.
Plant Name: Behr Iron + Metal Rockford
Duct Shape: Circular or Rectangular
Length: — Width: — or Diameter: 3.416
Flue Area: 9.168
Upstream Diameters: >5
Downstream Diameters: >2
Port Type: Nipple
Port Length: 6
Port Diameter: 6
Test Method: M 29
Source Condition: Normal

Meter and Probe Data

Meter ID: CM18
Meter Y Value: 1.012
ΔH Value: 1.565
Pitot ID: 170 A
Pitot Coefficient: .84
Train Type: Anderson
Nozzle Kit ID: Teflon #1
Nozzle Diameter: .239
Filter Number/Weight: 8883
Probe Length: 4'
Probe Liner: Glass
Thimble Number/Weight: —
Pre-Test Nozzle Leak Check: 0.00 @ 15 "Hg
Post-Test Nozzle Leak Check: 0.00 @ 25 "Hg
Pre-Test Pitot Leak Check: ✓ @ 5 "H_2O
Post-Test Pitot Leak Check: ✓ @ 5 "H_2O

Traverse Data

Ports Sampled: 2
Points/Port: 12
Min/Point: 5
Total Points: 24
Total Test Time: 120
Sample Plane: Horizontal or Vertical

Stack Parameters

Barometric Pressure: 29.33
Static Pressure: -1.0
CO_2 %: / / / Avg. 0
O_2 %: / / / Avg. 20.9
Determined by: Method 3 or Method 3A
Imp and/or silica balance Model and S/N: S10-37
Servomex Serial #: 014400/3935
Initial Imp. Volume or Weight: 2110.4
Final Imp. Volume or Weight: 2117.4
Imp. Volume or Weight Gain: 7.0
Initial Silica Weight: 835.8
Final Silica Weight: 866.2
Silica Weight Gain: 30.4

Comments: Imp "A"

Post-Test Nozzle Verification:

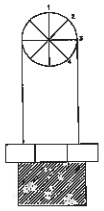

1) ✓ 2) ✓ 3) ✓ 4) ✓

Isokinetic Sampling Field Data Sheet

Project Number:	M154005	Date:	10-7-15	Test Number:	1
Client:	R.K. Associates Inc	Test Location:	Blue Baghouse Stack	Operator:	MDK Test Tech: KOS
Plant:	Bemis Inc - Metal Rockford	Test Method:	M 29	Page Number:	1 of 1

3.306 1.052

Port-Point #.	Time	(ΔP)	Orifice Setting (ΔH)	Meter Volume (V_m) ft³, Actual	Square Root, ΔP	Meter Rate, Cubic Feet/ Min.	×5 Theoretical Meter Volume, (V_m) ft³, per point	Theoretical Meter Volume, (V_m) ft³, total	Stack Temp, °F	Meter Temp Inlet, °F	Meter Temp Outlet, °F	Pump Vacuum, "Hg	Probe Temp. °F	Filter Temp. °F	Impinger Outlet Well Temp. °F
1-1	0820	.74	2.17	45.045	.865	.872	4.361		81	61	60	7	261	260	56
2	0825	.77	2.26	49.15	.877	.889	4.448	49.406	82	61	66	7	254	260	55
3	0830	.79	2.32	53.58	.888	.901	4.506	53.854	83	63	61	7	250	262	58
4	0835	.79	2.32	57.75	.888	.901	4.506	58.012	84	64	61	7	251	261	60
5	0840	.84	2.47	62.21	.916	.929	4.646	62.518	84	65	62	8	250	258	62
6	0845	.86	2.52	66.95	.927	.940	4.701	67.164	85	68	63	8	253	259	65
7	0850	.88	2.58	71.54	.938	.951	4.756	71.865	86	69	64	8	250	261	63
8	0855	.92	2.67	76.30	.959	.966	4.834	76.621	88	70	65	8	250	255	62
9	0900	.95	2.75	81.33	.974	.982	4.912	81.455	89	72	66	9	253	259	61
10	0905	.97	2.85	86.22	.984	1.009	5.047	86.367	90	73	67	9	251	260	60
11	0910	.97	2.85	91.24	.984	1.009	5.047	91.414	90	73	67	9	250	260	62
12	0915	1.0	2.94	96.38	1.0	1.025	5.125	96.461	89	76	70	10	252	260	63
	0920			101.418				101.586							
2-1	0939	1.0	2.97	101.418	1.0	1.035	5.175		85	76	73	10	255	258	50
2	0944	1.2	3.56	106.85	1.095	1.133	5.668	106.761	85	76	74	11	260	259	52
3	0949	1.3	3.86	112.54	1.140	1.180	5.900	112.429	84	79	75	12	257	261	55
4	0954	1.6	4.75	118.52	1.264	1.309	6.545	118.329	84	80	76	13	256	259	55
5	0959	1.9	6.28	125.18	1.378	1.450	7.250	124.874	83	81	77	14	253	260	55
6	1004	2.0	6.61	132.35	1.414	1.487	7.438	132.124	83	83	79	15	251	260	55
7	1009	2.1	6.94	139.75	1.449	1.524	7.622	139.562	83	84	80	16	250	261	56
8	1014	2.2	7.27	147.25	1.483	1.560	7.801	147.184	83	84	81	16	252	260	56
9	1019	2.5	8.27	155.05	1.581	1.663	8.316	154.985	84	86	82	20	251	250	53
10	1024	2.6	8.59	163.52	1.612	1.696	8.481	163.301	84	86	82	21	255	262	54
11	1029	2.7	8.93	171.95	1.643	1.728	8.643	171.782	84	87	84	22	257	260	54
12	1034	2.7	8.93	180.68	1.643	1.728	8.643	180.425	84	87	84	22	257	258	54
	1039			189.309				189.068							

3.5

IMPINGER WEIGHT SHEET

PLANT: Behr

UNIT NO: Blue

LOCATION: Stack

DATE: 10/7

TEST NO: 1 (A)

METHOD: 5/29

WEIGHED/MEASURED BY: MEP

BALANCE ID: 510-37

Circle One:	FINAL WEIGHT MLS / GRAMS	INITIAL WEIGHT MLS / GRAMS	IMPINGER GAIN	IMPINGER CONTENTS
IMPINGER 1	727.0	745.4		
IMPINGER 2	735.1	717.6		
IMPINGER 3	655.3	647.4		
IMPINGER 4	866.2	835.8		
IMPINGER 5				
IMPINGER 6				
IMPINGER 7				
IMPINGER 8				

	FINAL TOTAL	INITIAL TOTAL	TOTAL IMPINGER GAIN
IMPINGERS	2117.4	2110.4	7.0
SILICA			30.4

Isokinetic Sampling Cover Sheet

Test Engineer: MDK
Test Technician: KOJ

Plant Information

Run Number: 2
Test Location: Blue Baghouse Stack
Duct Shape: Circular or Rectangular
Flue Area: 9.168
Port Type: Nipple
Test Method: M29

Date: 10-7-15
Client Name: RK Associates Inc
Length: — Width: — or Diameter: 3.416
Upstream Diameters: >5
Port Length: 6
Source Condition: Normal

Project Number: M154005
Plant Name: Behr Iron + Metal Rockford
Downstream Diameters: >2
Port Diameter: 6

Meter and Probe Data

Meter ID: CM18
Pitot ID: 170 A
Nozzle Kit ID: Teflon #1
Probe Length: 4'
Pre-Test Nozzle Leak Check: 0.00 @ 15 "Hg
Pre-Test Pitot Leak Check: ✓ @ 5 "H_2O

Meter Y Value: 1.012
Pitot Coefficient: .84
Nozzle Diameter: .239
Probe Liner: Glass

ΔH Value: 1.565
Train Type: Anderson
Filter Number/Weight: 8886
Thimble Number/Weight: —
Post-Test Nozzle Leak Check: 0.00 @ 5 "Hg
Post-Test Pitot Leak Check: ✓ @ 5 "H_2O

Traverse Data

Ports Sampled: 2
Total Points: 24

Points/Port: 12
Total Test Time: 120

Min/Point: 5
Sample Plane: Horizontal or Vertical

Stack Parameters

Barometric Pressure: 29.33
CO_2 %: / / / Avg. 0
Imp and/or silica balance Model and S/N: 510-37
Initial Imp. Volume or Weight: 2035.5
Initial Silica Weight: 829.8

Static Pressure: -1.0
O_2 %: / / / Avg. 20.9
Final Imp. Volume or Weight: 2049.7
Final Silica Weight: 843.7

Determined by: Method 3 or Method 3A
Servomex Serial #: 0144001/3935
Imp. Volume or Weight Gain: 14.2
Silica Weight Gain: 13.9

Comments: Imp "A"

Post-Test Nozzle Verification:

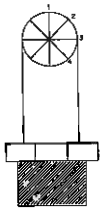

1) ✓ 2) ✓ 3) ✓ 4) ✓

Isokinetic Sampling Field Data Sheet

Project Number:	M154005	Date:	10-7-15	Test Number:	2
Client:	RK Associates Inc	Test Location:	Blue Baghouse Stack	Operator:	MPK Test Tech: KOJ
Plant:	Behr Iron + Metal Recycling	Test Method:	M29	Page Number:	1 of

3.026 ^ 1.059 ^

Port-Point #.	Time	(ΔP)	Orifice Setting (ΔH)	Meter Volume (V_m) ft^3, Actual	Square Root, ΔP	Meter Rate, Cubic Feet/ Min.	×5 Theoretical Meter Volume, (V_m) ft^3, per point	Theoretical Meter Volume, (V_m) ft^3, total	Stack Temp, °F	Meter Temp Inlet, °F	Meter Temp Outlet, °F	Pump Vacuum, " Hg	Probe Temp. °F	Filter Temp. °F	Impinger Outlet Well Temp. °F
1-1	1135	.29	.877	94.215	.538	.570	2.851		95	93	92	2	253	257	52
2	1140	.31	.938	96.81	.556	.589	2.948	97.066	95	93	92	2	250	258	45
3	1145	.31	.938	99.85	.556	.589	2.948	100.014	96	94	93	2	250	258	44
4	1150	.32	.968	102.66	.565	.599	2.995	102.962	96	94	93	2	251	256	44
5	1155	.37	1.12	105.85	.608	.644	3.220	105.957	96	95	93	2	255	250	47
6	1200	.38	1.15	109.03	.616	.652	3.264	109.177	96	96	94	2	257	259	50
7	1205	.41	1.24	112.20	.640	.678	3.390	112.441	95	97	94	3	261	260	47
8	1210	.45	1.36	115.59	.670	.710	3.551	115.831	95	98	95	4	260	262	47
9	1215	.49	1.48	119.21	.700	.741	3.706	119.382	95	98	97	4	259	264	46
10	1220	.52	1.57	122.90	.721	.763	3.818	123.088	95	99	97	5	260	265	46
11	1225	.48	1.45	126.75	.692	.733	3.668	126.906	94	98	97	4	260	265	47
12	1230	.46	1.39	130.41	.678	.718	3.591	130.574	94	98	97	4	266	261	47
	1235			134.207				134.165							
2-1	1243	.44	1.33	134.207	.663	.702	3.512		92	96	97	4	257	258	47
2	1248	.43	1.30	137.72	.655	.694	3.472	137.677	92	96	96	4	258	260	46
3	1253	.40	1.21	141.25	.632	.669	3.348	141.149	92	96	96	4	252	261	50
4	1258	.40	1.21	144.72	.632	.669	3.348	144.497	92	96	96	4	253	261	54
5	1303	.41	1.24	147.98	.640	.678	3.390	147.845	93	95	95	4	255	260	55
6	1308	.45	1.27	151.41	.648	.686	3.431	151.235	92	95	95	4	255	259	51
7	1313	.43	1.30	154.82	.655	.694	3.472	154.666	92	95	95	4	260	257	53
8	1318	.43	1.30	158.31	.655	.694	3.472	158.138	92	95	95	4	264	257	52
9	1323	.43	1.30	161.88	.655	.694	3.472	161.610	92	95	95	4	257	255	53
10	1328	.44	1.33	165.33	.663	.702	3.512	165.082	91	95	95	4	254	257	53
11	1333	.45	1.36	168.79	.670	.710	3.551	168.594	92	95	95	4	253	258	53
12	1338	.46	1.39	172.40	.678	.718	3.591	172.145	93	96	95	4	255	257	51
	1343			176.024				175.736							

IMPINGER WEIGHT SHEET

PLANT: Behr Iron & Metal

UNIT NO: Blue Baghouse

LOCATION: stack

DATE: 10/7/15

TEST NO: 2 (A)

METHOD: 5/29

WEIGHED/MEASURED BY: MEP

BALANCE ID: 510-37

Circle One:	FINAL WEIGHT MLS / GRAMS	INITIAL WEIGHT MLS / GRAMS	IMPINGER GAIN	IMPINGER CONTENTS
IMPINGER 1	740.0	735.0		
IMPINGER 2	692.0	684.1		
IMPINGER 3	617.7	616.4		
IMPINGER 4	843.7	829.8		
IMPINGER 5				
IMPINGER 6				
IMPINGER 7				
IMPINGER 8				

	FINAL TOTAL	INITIAL TOTAL	TOTAL IMPINGER GAIN
IMPINGERS	2849.7	2835.5	14.2
SILICA			13.9

Isokinetic Sampling Cover Sheet

Test Engineer: MDK
Test Technician: KOJ

Plant Information

Run Number: 3
Test Location: Blue Baghouse Stack
Duct Shape: Circular or Rectangular
Flue Area: 9.168
Port Type: Nipple
Test Method: M29

Date: 10-7-15
Client Name: RK Associates Inc.
Length: — Width: — or Diameter: 3.416
Upstream Diameters: >5
Port Length: 6"
Source Condition: Normal

Project Number: M154005
Plant Name: Behr Iron + Metal Rockford
Downstream Diameters: >2
Port Diameter: 6"

Meter and Probe Data

Meter ID: CM18
Pitot ID: 170A
Nozzle Kit ID: Teflon #1
Probe Length: 4'
Pre-Test Nozzle Leak Check: 0.00 @ 15 "Hg
Pre-Test Pitot Leak Check: ✓ @ 5 "H_2O

Meter Y Value: 1.012
Pitot Coefficient: .84
Nozzle Diameter: .239
Probe Liner: Glass

ΔH Value: 1.565
Train Type: Anderson
Filter Number/Weight: 8891
Thimble Number/Weight: —
Post-Test Nozzle Leak Check: 0.00 ✓ @ 5 "Hg
Post-Test Pitot Leak Check: ✓ @ 5 "H_2O

Traverse Data

Ports Sampled: 2
Total Points: 24

Points/Port: 12
Total Test Time: 120

Min/Point: 5
Sample Plane: Horizontal or Vertical

Stack Parameters

Barometric Pressure: 29.33
CO_2 %: / / / Avg. 0
Imp and/or silica balance Model and S/N: S10-37
Initial Imp. Volume or Weight: 2125.5
Initial Silica Weight: 834.9

Static Pressure: -1.0
O_2 %: / / /Avg. 20.9
Servomex Serial #: 014400/3935
Final Imp. Volume or Weight: 2135.6
Final Silica Weight: 849.1

Determined by: Method 3 or Method 3A
Imp. Volume or Weight Gain: 10.1
Silica Weight Gain: 14.2

Comments:

Post-Test Nozzle Verification:

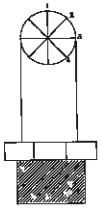

1) ✓ 2) ✓ 3) ✓ 4) ✓

Isokinetic Sampling Field Data Sheet

Project Number: M154005 | Date: 10-7-15 | Test Number: 3

Client: RK Associates Inc | Test Location: Blue Baghouse Stack | Operator: MDK | Test Tech: KOS

Plant: Behr Iron + Metal Rockford | Test Method: M29 | Page Number: 1 of 1

2.999 1.055

Port-Point #.	Time	(ΔP)	Orifice Setting (ΔH)	Meter Volume (V_m) ft^3, Actual	Square Root, ΔP	Meter Rate, Cubic Feet/ Min.	x5 Theoretical Meter Volume, (V_m) ft^3, per point	Theoretical Meter Volume, (V_m) ft^3, total	Stack Temp, °F	Meter Temp Inlet, °F	Meter Temp Outlet, °F	Pump Vacuum, " Hg	Probe Temp. °F	Filter Temp. °F	Impinger Outlet Well Temp. °F
1-1	1420	.39	1.17	76.729	.624	.658	3.294		104	91	92	4	253	258	56
2	1425	.35	1.05	79.63	.591	.624	3.120	80.023	104	91	92	3	252	250	56
3	1430	.35	1.05	82.95	.591	.624	3.120	83.143	103	92	92	3	252	265	58
4	1435	.36	1.08	86.07	.600	.633	3.165	86.263	103	92	92	3	255	263	58
5	1440	.37	1.10	89.20	.608	.641	3.208	89.428	103	93	92	3	260	259	57
6	1445	.38	1.14	92.42	.616	.650	3.251	92.636	101	94	92	3	259	259	55
7	1450	.41	1.23	95.58	.640	.675	3.377	95.887	100	94	92	4	261	259	57
8	1455	.42	1.26	99.10	.648	.683	3.418	99.264	99	94	92	4	262	259	56
9	1500	.44	1.32	102.51	.663	.699	3.499	102.682	97	95	93	4	262	258	56
10	1505	.44	1.32	106.09	.663	.699	3.499	106.181	96	95	93	4	262	264	57
11	1510	.41	1.23	109.52	.640	.675	3.377	109.680	95	95	93	4	257	264	56
12	1515	.36	1.08	112.96	.600	.633	3.165	113.057	95	95	93	3	261	260	56
	1520			116.335				116.222							
2-1	1528	.27	.81	116.335	.519	.548	2.740		96	95	93	3	259	261	55
2	1533	.26	.78	119.09	.509	.537	2.689	118.962	96	95	93	3	262	262	52
3	1538	.23	.69	121.76	.479	.505	2.529	121.651	96	96	93	2	254	258	52
4	1543	.26	.78	124.31	.509	.537	2.689	124.180	96	96	93	3	254	259	52
5	1548	.34	1.02	127.11	.583	.615	3.075	126.869	96	96	93	3	260	259	52
6	1553	.39	1.17	130.24	.624	.658	3.294	129.944	96	96	93	4	262	259	52
7	1558	.43	1.29	133.47	.655	.691	3.459	133.238	95	96	93	4	266	262	53
8	1603	.44	1.32	136.82	.663	.699	3.499	136.697	94	96	93	4	266	261	53
9	1608	.44	1.32	140.35	.663	.699	3.499	140.196	94	96	93	4	261	260	54
10	1613	.45	1.35	143.83	.670	.707	3.538	143.695	95	97	93	4	260	259	55
11	1618	.42	1.26	147.52	.648	.683	3.418	147.233	95	97	94	4	260	260	53
12	1623	.38	1.14	150.92	.616	.650	3.251	150.651	93	98	94	4	260	259	54
	1628			154.113				153.902							

IMPINGER WEIGHT SHEET

PLANT: Behr Iron & METAL

UNIT NO: Blue Baghouse

LOCATION: Stack

DATE: 10.7.15

TEST NO: 3 (A)

METHOD: 5/29

WEIGHED/MEASURED BY: MEP

BALANCE ID: S10-37

Circle One:	FINAL WEIGHT MLS / GRAMS	INITIAL WEIGHT MLS / GRAMS	IMPINGER GAIN	IMPINGER CONTENTS
IMPINGER 1	744.9	749.3		
IMPINGER 2	746.7	728.3		
IMPINGER 3	650.0	647.9		
IMPINGER 4	849.1	834.9		
IMPINGER 5				
IMPINGER 6				
IMPINGER 7				
IMPINGER 8				

	FINAL TOTAL	INITIAL TOTAL	TOTAL IMPINGER GAIN
IMPINGERS	2135.6	2125.5	10.1
SILICA			14.2

Isokinetic Sampling Cover Sheet

Test Engineer: MDK
Test Technician: KOJ

Plant Information

Run Number: 4
Test Location: Blue Baghouse Stack
Duct Shape: Circular or Rectangular
Flue Area: 9.168
Port Type: Nipple
Test Method: M29

Date: 10-7-15
Client Name: RK Associates Inc.
Length: — Width: — or Diameter: 3.416
Upstream Diameters: >5
Downstream Diameters: >2
Port Length: 6"
Port Diameter: 6"
Source Condition: Normal

Project Number: M154 005
Plant Name: Behr Iron + Metal Rockford

Meter and Probe Data

Meter ID: CM18
Pitot ID: 170A
Nozzle Kit ID: Teflon #1
Probe Length: 4'
Pre-Test Nozzle Leak Check: 0.00 @ 10 "Hg
Pre-Test Pitot Leak Check: ✓ @ 5 "H_2O

Meter Y Value: 1.012
Pitot Coefficient: .84
Nozzle Diameter: .239
Probe Liner: Glass

ΔH Value: 1.565
Train Type: Anderson
Filter Number/Weight: 8889
Thimble Number/Weight: —
Post-Test Nozzle Leak Check: 0.00 @ 5 "Hg
Post-Test Pitot Leak Check: ✓ @ 5 "H_2O

Traverse Data

Ports Sampled: 2
Total Points: 24

Points/Port: 12
Total Test Time: 120

Min/Point: 5
Sample Plane: Horizontal or Vertical

Stack Parameters

Barometric Pressure: 29.33
CO_2 %: / / / Avg. 0
Imp and/or silica balance Model and S/N: SID-37
Initial Imp. Volume or Weight: 2012
Initial Silica Weight: 844.7

Static Pressure: -1.0
O_2 %: / / / Avg. 20.9
Final Imp. Volume or Weight: 2024.3
Final Silica Weight: 852.2

Determined by: Method 3 or Method 3A
Servomex Serial #: 014401/3535
Imp. Volume or Weight Gain: 12.3
Silica Weight Gain: 8

Comments: Imp "A"

Post-Test Nozzle Verification: 1) ✓ 2) ✓ 3) ✓ 4) ✓

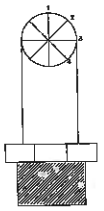

Isokinetic Sampling Field Data Sheet

Project Number: M154005
Date: 10-7-15
Test Number: 4
Client: RK Associates Inc.
Test Location: Blue Baghouse Stack
Operator: MDK
Test Tech: KOJ
Plant: Beiler Iron + Metal Rockford
Test Method: M29
Page Number: 1 of 1

3.003 1.046

Port-Point #.	Time	(ΔP)	Orifice Setting (ΔH)	Meter Volume (V_m) ft^3, Actual	Square Root, ΔP	Meter Rate, Cubic Feet/ Min.	×5 Theoretical Meter Volume, (V_m) ft^3, per point	Theoretical Meter Volume, (V_m) ft^3, total	Stack Temp, °F	Meter Temp Inlet, °F	Meter Temp Outlet, °F	Pump Vacuum, " Hg	Probe Temp. °F	Filter Temp. °F	Impinger Outlet Well Temp. °F
1-1	1700	.30	.89	54.435	.547	.577	2.889		94	89	90	3	250	267	47
2	1705	.29	.87	57.08	.538	.568	2.840	57.324	96	89	89	3	250	264	48
3	1710	.30	.89	59.91	.547	.577	2.889	60.164	97	89	89	3	250	263	48
4	1715	.33	.99	62.84	.574	.606	3.030	63.053	98	88	88	3	253	260	48
5	1720	.36	1.08	65.87	.600	.633	3.165	66.083	100	88	88	3	257	260	48
6	1725	.39	1.17	69.07	.624	.658	3.294	69.248	100	87	87	3	263	260	48
7	1730	.42	1.26	72.38	.648	.683	3.418	72.542	100	87	87	4	262	260	48
8	1735	.44	1.32	75.70	.663	.699	3.499	75.960	100	87	86	4	263	260	48
9	1740	.44	1.32	79.23	.663	.699	3.499	79.459	100	86	85	4	260	259	48
10	1745	.41	1.23	82.84	.640	.675	3.377	82.958	100	86	85	4	261	261	48
11	1750	.38	1.14	86.22	.616	.650	3.251	86.335	99	86	84	3	259	260	47
12	1755	.36	1.08	89.45	.600	.633	3.165	89.586	98	85	84	3	260	260	47
	1800			92.689				92.751							
2-1	1805	.35	1.05	92.689	.591	.624	3.120		96	82	80	3	253	254	47
2	1810	.38	1.14	95.96	.616	.650	3.251	95.871	95	82	81	3	252	253	47
3	1815	.41	1.23	99.28	.640	.675	3.377	99.122	95	82	82	4	254	251	47
4	1820	.42	1.26	102.66	.648	.683	3.418	102.499	95	80	81	4	250	258	47
5	1825	.44	1.32	106.10	.663	.699	3.499	105.917	93	80	81	4	254	261	48
6	1830	.45	1.34	109.68	.670	.697	3.488	109.416	91	80	80	4	257	262	47
7	1835	.44	1.31	113.24	.663	.689	3.449	112.904	89	80	80	4	255	261	46
8	1840	.46	1.38	116.62	.678	.709	3.547	116.353	89	80	79	4	258	262	46
9	1845	.46	1.38	120.29	.678	.709	3.547	119.900	87	80	79	4	260	266	46
10	1850	.45	1.35	123.72	.670	.701	3.508	123.447	87	80	79	4	261	260	46
11	1855	.40	1.20	127.34	.632	.661	3.307	126.955	86	80	78	4	267	260	47
12	1900	.36	1.08	130.52	.600	.627	3.138	130.262	86	80	78	3	263	259	47
	1905			133.824				133.400							

IMPINGER WEIGHT SHEET

PLANT: Behr Iron + Metal

UNIT NO: Blue Baghouse

LOCATION: Stack

DATE: 10.7.15

TEST NO: 4 (A)

METHOD: 5/29

WEIGHED/MEASURED BY: MEP

BALANCE ID: 510-37

Circle One:	FINAL WEIGHT MLS / GRAMS	INITIAL WEIGHT MLS / GRAMS	IMPINGER GAIN	IMPINGER CONTENTS
IMPINGER 1	734.4	730.8		
IMPINGER 2	672.7	664.7		
IMPINGER 3	617.2	616.5		
IMPINGER 4	857.2	844.7		
IMPINGER 5				
IMPINGER 6				
IMPINGER 7				
IMPINGER 8				

	FINAL TOTAL	INITIAL TOTAL	TOTAL IMPINGER GAIN
IMPINGERS	2024.3	2012	12.3
SILICA			8.0

Appendix G - Calibration Data

MOSTARDI PLATT

Procedures for Method 5 and Flow Calibration

Nozzles

The nozzles are measured according to Method 5, Section 10.1

Dry Gas Meters

The test meters are calibrated according to Method 5, Section 10.3 and "Procedures for Calibrating and Using Dry Gas Volume Meters as Calibration Standards" by P.R. Westlin and R.T. Shigehara, March 10, 1978.

Analytical Balance

The accuracy of the analytical balance is checked with Class S, Stainless Steel Type 303 weights manufactured by F. Hopken and Son, Jersey City, New Jersey.

Temperature Sensing Devices

The potentiometer and thermocouples are calibrated utilizing a NBS traceable millivolt source.

Pitot Tubes

The pitot tubes utilized during this test program are manufactured according to the specification described and illustrated in the *Code of Federal Regulations*, Title 40, Part 60, Appendix A, Methods 1 and 2. The pitot tubes comply with the alignment specifications in Method 2, Section 10.1; and the pitot tube assemblies are in compliance with specifications in the same section.

Dry Gas Meter/Control Module Calibration Diagram

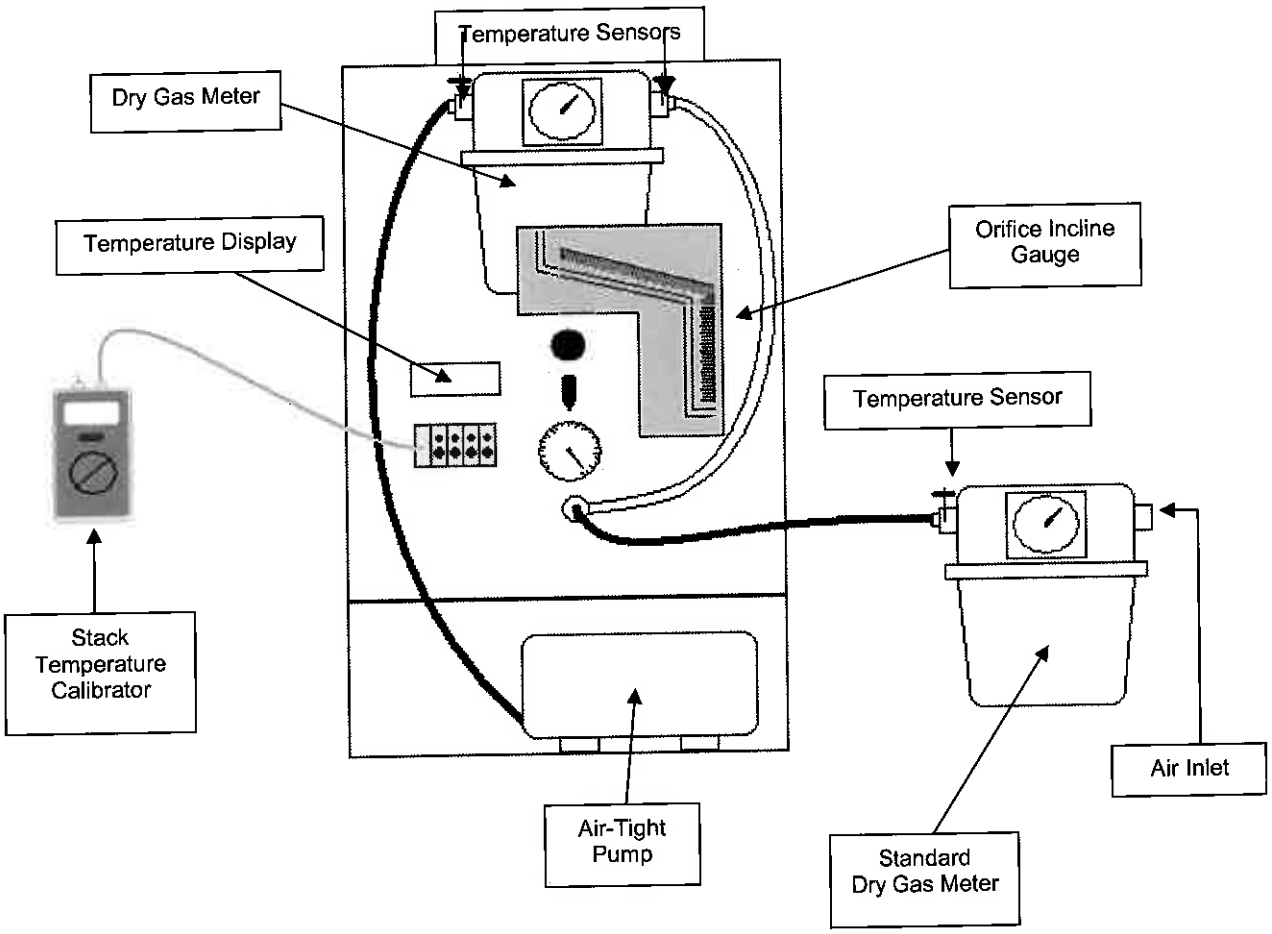

Meter Box Calibration

Dry Gas Meter Calibration Data

Dry Gas Meter No.	CM8	Date:	September 28, 2015
Standard Meter No.	14159239	Calibrated By:	EWK
Standard Meter (Y)	0.9979	Barometric Pressure:	29.26

Run Number	Orifice Setting in H_2O Chg (H)	Standard Meter Gas Volume vr	Dry Gas Meter Gas Volume vd	Standard Meter Temp. F° tr	Dry Gas Meter Inlet Temp. F° tdi	Dry Gas Meter Outlet Temp. F° tdo	Dry Gas Meter Avg. Temp. F° td	Time Min	Time Sec	Y	Chg (H)
Final		11.910	38.830	72	75	75					
Initial		6.474	33.325	72	74	74					
Difference 1	0.20	5.436	5.505	72	75	75	75	19	28	0.990	1.485
Final		17.891	44.877	73	77	76					
Initial		12.060	38.984	73	75	75					
Difference 2	0.50	5.831	5.893	73	76	76	76	13	1	0.991	1.444
Final		25.544	52.635	73	78	76					
Initial		17.983	44.960	73	76	75					
Difference 3	0.70	7.561	7.675	73	77	76	76	14	20	0.987	1.457
Final		33.792	61.025	73	79	76					
Initial		25.668	52.765	73	77	76					
Difference 4	0.90	8.124	8.260	73	78	76	77	13	39	0.987	1.470
Final		43.585	70.984	73	79	76					
Initial		33.988	61.207	73	78	76					
Difference 5	1.20	9.597	9.777	73	79	76	77	14	45	0.984	1.639
Final		93.935	20.944	73	77	74					
Initial		88.444	15.468	73	74	73					
Difference 6	2.00	5.491	5.476	73	76	74	75	6	15	0.998	1.506
								Average		**0.990**	**1.500**

Stack Temperature Sensor Calibration

Meter Box # : CM8 *Name :* EWK

Ambient Temperature : 75 °F *Date :* September 28, 2015

Calibrator Model # : CL23A

Serial # : T-249465

Date Of Certification : December 26, 2014

Primary Standards Directly Traceable National Institute of Standards and Technology (NIST)

Reference Source Temperature (° F)	Test Thermometer Temperature (° F)	Temperature Difference %
0	0	0.0
250	249	0.1
600	597	0.3
1200	1198	0.1

$$\frac{(\text{Ref. Temp., °F} + 460) - (\text{Test Therm. Temp., °F} + 460)}{\text{Ref. Temp., °F} + 460} * 100 <= 1.5\ \%$$

Meter Box Calibration

Dry Gas Meter Calibration Data

Dry Gas Meter No.	*CM8*	*Date:*	*October 20, 2015*
Standard Meter No.	*16745468*	*Calibrated By:*	*KAG*
Standard Meter (Y)	*1.0006*	*Barometric Pressure:*	*29.26*

Run Number	Orifice Setting in H_2O Chg (H)	Standard Meter Gas Volume vr	Dry Gas Meter Gas Volume vd	Standard Meter Temp. F° tr	Dry Gas Meter Inlet Temp. F° tdi	Dry Gas Meter Outlet Temp. F° tdo	Dry Gas Meter Avg. Temp. F° td	Time Min	Time Sec	Y	Chg (H)
Final		65.884	36.573	64	67	66					
Initial		60.166	30.744	64	65	65					
Difference 1	0.20	5.718	5.829	64	66	66	66	20	5	0.984	1.401
Final		71.156	41.946	65	69	67					
Initial		66.122	36.817	64	67	66					
Difference 2	0.50	5.034	5.129	65	68	67	67	11	24	0.986	1.455
Final		76.475	47.366	65	71	68					
Initial		71.443	42.238	65	69	67					
Difference 3	0.70	5.032	5.128	65	70	68	69	9	53	0.987	1.531
Final		82.252	53.255	65	72	69					
Initial		76.764	47.667	65	70	68					
Difference 4	0.90	5.488	5.588	65	71	69	70	9	18	0.989	1.462
Final		87.618	58.724	65	73	70					
Initial		82.557	53.578	65	71	69					
Difference 5	1.20	5.061	5.146	65	72	70	71	7	36	0.992	1.528
Final		60.012	30.583	64	65	64					
Initial		54.941	25.468	64	64	64					
Difference 6	2.00	5.071	5.115	64	65	64	64	6	3	0.987	1.621
								Average		**0.988**	**1.500**

Stack Temperature Sensor Calibration

Meter Box # : CM8 *Name :* KAG

Ambient Temperature : 66 °F *Date :* October 20, 2015

Calibrator Model # : CL23A

Serial # : T-249465

Date Of Certification : December 26, 2014

Primary Standards Directly Traceable National Institute of Standards and Technology (NIST)

Reference Source Temperature (° F)	Test Thermometer Temperature (° F)	Temperature Difference %
0	0	0.0
250	249	0.1
600	597	0.3
1200	1198	0.1

$$\frac{(\text{Ref. Temp., °F} + 460) - (\text{Test Therm. Temp., °F} + 460)}{\text{Ref. Temp., °F} + 460} * 100 <= 1.5\ \%$$

S TYPE PITOT TUBE INSPECTION WORKSHEET

Pitot Tube No: 1037 Date: 8/20/2015 Inspector's Name: KOJ

Type of Probe: (circle one) M2 M5 M17 Probe Length: 3 ft.

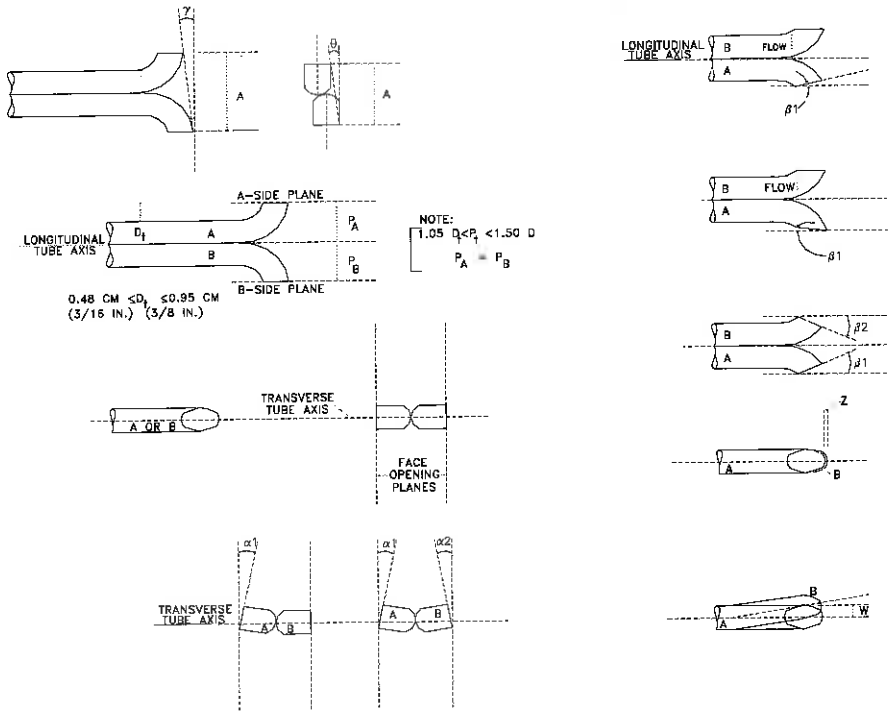

Pitot tube assembly level? x yes ____ no

Pitot tube openings damaged? ____ yes (explain below) x no

a_1 = 1 ° (<10°), a_2 = 2 ° (<10°) z = A sin g = 0.033 (in.); (<0.125 in.)

b_1 = 1.5 ° (<5°), b_2 = 1 ° (<5°) w = A sin q = 0.016 (in.); (<0.03125 in.)

γ = 2 °, θ = 1 °, A = 0.940 (in.) P_A = 0.750 (in.), P_B = 0.750 (in.), D_t = 0.375 (in.)

Calibration required? ____ yes x no

S TYPE PITOT TUBE INSPECTION WORKSHEET

Pitot Tube No: 1037 Date: 10/12/2015 Inspector's Name: JDV

Type of Probe: (circle one) M2 M5 M17 Probe Length: 3 ft.

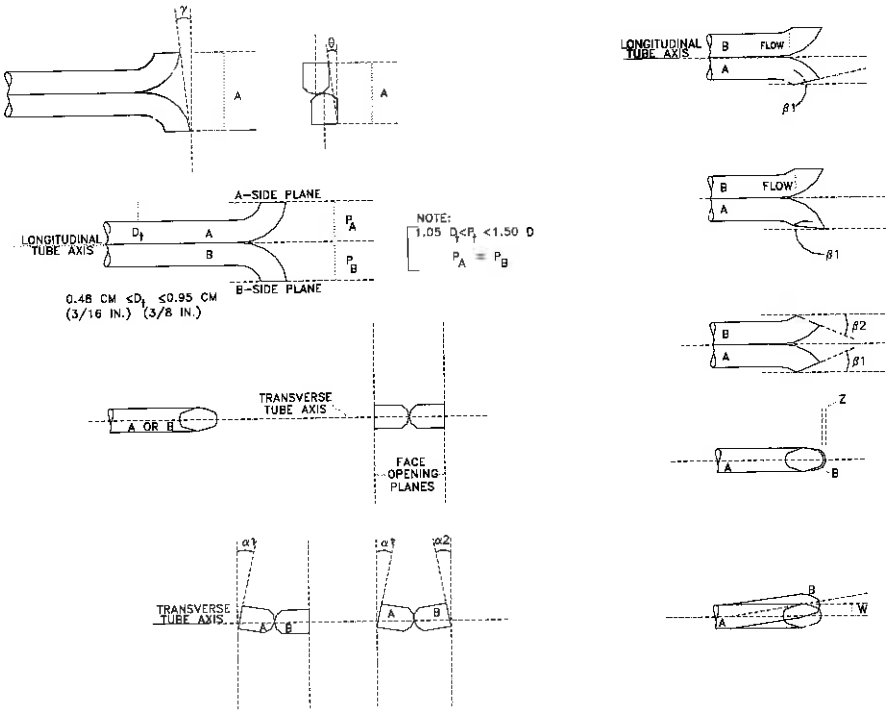

Pitot tube assembly level? x yes ____ no

Pitot tube openings damaged? ____ yes (explain below) x no

a_1 = 0.5 ° (<10°), a_2 = 1.5 ° (<10°) z = A sin g = 0.008 (in.); (<0.125 in.)

b_1 = 0.5 ° (<5°), b_2 = 0.5 ° (<5°) w = A sin q = 0.049 (in.); (<0.03125 in.)

γ = 0.5 °, θ = 3 °, A = 0.945 (in.) P_A = 0.750 (In.), P_B = 0.750 (in.), D_t = 0.375 (in.)

Calibration required? ____ yes x no

Nozzle Calibration

Date: 3/2/2015

Analyst: BPT

Nozzle ID No.: 6T-1

Material/Type: Teflon Coated

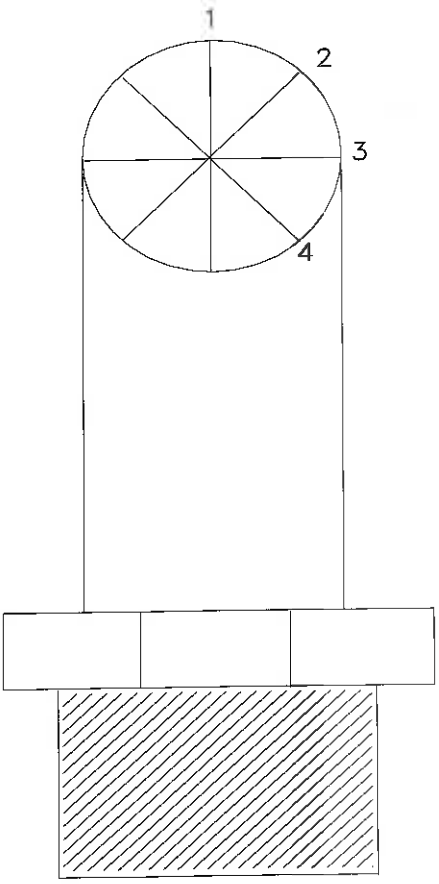

0.168	1
0.171	2
0.169	3
0.169	4

Valid Data

Average
0.169

Meter Box Calibration

Dry Gas Meter Calibration Data

Dry Gas Meter No.	*CM29*	*Date:*	*October 16, 2015*
Standard Meter No.	*16745468*	*Calibrated By:*	*KAG*
Standard Meter (Y)	*1.0006*	*Barometric Pressure:*	*29.32*

Run Number	Orifice Setting in H_2O Chg (H)	Standard Meter Gas Volume vr	Dry Gas Meter Gas Volume vd	Standard Meter Temp. F° tr	Dry Gas Meter Inlet Temp. F° tdi	Dry Gas Meter Outlet Temp. F° tdo	Dry Gas Meter Avg. Temp. F° td	Time Min	Time Sec	Y	Chg (H)
Final		30.864	82.958	60	61	62					
Initial		24.780	76.958	59	60	60					
Difference 1	0.20	6.084	6.000	60	61	61	61	23	6	1.016	1.614
Final		36.169	88.282	60	63	64					
Initial		31.154	83.239	60	62	62					
Difference 2	0.50	5.015	5.043	60	63	63	63	12	29	0.998	1.731
Final		41.377	93.534	60	64	65					
Initial		36.377	88.479	60	63	64					
Difference 3	0.70	5.000	5.055	60	64	65	64	10	33	0.995	1.738
Final		46.875	99.114	60	65	66					
Initial		41.724	93.883	60	64	65					
Difference 4	0.90	5.151	5.231	60	65	66	65	9	41	0.992	1.770
Final		52.762	1005.115	60	65	66					
Initial		47.130	999.373	60	65	66					
Difference 5	1.20	5.632	5.742	60	65	66	66	9	10	0.988	1.767
Final		24.537	76.724	59	59	60					
Initial		18.819	70.959	59	59	59					
Difference 6	2.00	5.718	5.765	59	59	60	59	7	14	0.987	1.794
								Average		**0.996**	**1.736**

Stack Temperature Sensor Calibration

Meter Box # : CM29 *Name :* KAG

Ambient Temperature : 65 °F *Date :* October 16, 2015

Calibrator Model # : CL23A

Serial # : T-249465

Date Of Certification : August 7, 2012

Primary Standards Directly Traceable National Institute of Standards and Technology (NIST)

Reference Source Temperature (° F)	Test Thermometer Temperature (° F)	Temperature Difference %
0	-2	0.4
250	247	0.4
600	596	0.4
1200	1196	0.2

$$\frac{(\text{Ref. Temp., °F} + 460) - (\text{Test Therm. Temp., °F} + 460)}{\text{Ref. Temp., °F} + 460} * 100 <= 1.5\ \%$$

Dry Gas Meter Calibration Data

Dry Gas Meter No.	CM29	Date:	September 28, 2015
Standard Meter No.	14159239	Calibrated By:	EWK
Standard Meter (Y)	0.9979	Barometric Pressure:	29.29

Run Number	Orifice Setting in H_2O Chg (H)	Standard Meter Gas Volume vr	Dry Gas Meter Gas Volume vd	Standard Meter Temp. F° tr	Dry Gas Meter Inlet Temp. F° tdi	Dry Gas Meter Outlet Temp. F° tdo	Dry Gas Meter Avg. Temp. F° td	Time Min	Time Sec	Y	Chg (H)
Final		57.300	89.660	70	73	73					
Initial		51.921	84.245	70	72	73					
Difference 1	0.20	5.379	5.415	70	73	73	73	19	20	0.996	1.488
Final		63.069	95.458	71	73	74					
Initial		57.456	89.814	71	73	73					
Difference 2	0.50	5.613	5.644	71	73	74	73	13	27	0.995	1.658
Final		72.052	104.560	71	73	75					
Initial		63.157	95.548	71	73	73					
Difference 3	0.70	8.895	9.012	71	73	74	74	17	50	0.988	1.624
Final		77.915	110.520	71	74	76					
Initial		72.174	104.681	71	74	74					
Difference 4	0.90	5.741	5.839	71	74	75	75	10	20	0.985	1.680
Final		83.113	115.824	71	74	75					
Initial		78.058	110.670	71	74	74					
Difference 5	1.20	5.055	5.154	71	74	75	74	8	7	0.982	1.783
Final		45.959	78.600	69	69	70					
Initial		39.173	71.873	69	69	69					
Difference 6	2.00	6.786	6.727	69	69	70	69	8	25	1.002	1.777
								Average		**0.991**	**1.668**

Stack Temperature Sensor Calibration

Meter Box # : CM29 *Name :* EWK

Ambient Temperature : 75 °F *Date :* September 28, 2015

Calibrator Model # : CL23A

Serial # : T-249465

Date Of Certification : December 26, 2014

Primary Standards Directly Traceable National Institute of Standards and Technology (NIST)

Reference Source Temperature (° F)	Test Thermometer Temperature (° F)	Temperature Difference %
0	-3	0.7
250	246	0.6
600	596	0.4
1200	1197	0.2

$$\frac{(\text{Ref. Temp., °F} + 460) - (\text{Test Therm. Temp., °F} + 460)}{\text{Ref. Temp., °F} + 460} * 100 <= 1.5\ \%$$

S TYPE PITOT TUBE INSPECTION WORKSHEET

Pitot Tube No: 72 Date: 9/8/2015 Inspector's Name: JCS1

Type of Probe: (circle one) M2 M5 M17 Probe Length: 5 ft.

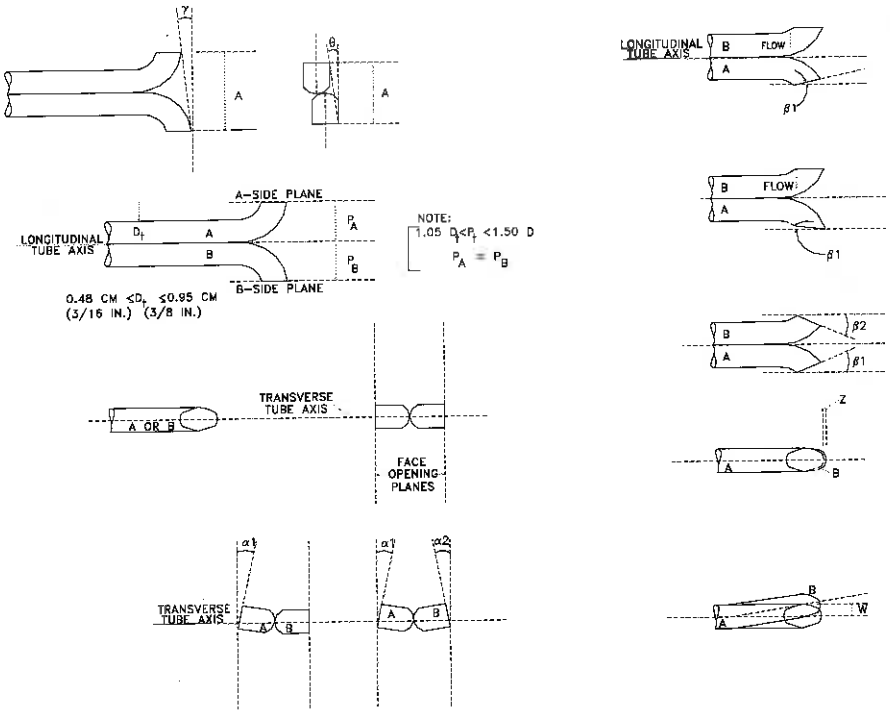

Pitot tube assembly level? x yes ____ no

Pitot tube openings damaged? ____ yes (explain below) x no

a_1 = 1 ° (<10°), a_2 = 3 ° (<10°) z = A sin g = 0.033 (in.); (<0.125 in.)

b_1 = 1 ° (<5°), b_2 = 4 ° (<5°) w = A sin q = 0.000 (in.); (<0.03125 in.)

γ = 2 °, θ = 0 °, A = 0.940 (in.) P_A = 0.470 (in.), P_B = 0.470 (in.), D_t = 0.375 (in.)

Calibration required? ____ yes x no

S TYPE PITOT TUBE INSPECTION WORKSHEET

Pitot Tube No: 72 Date: 10/9/2015 Inspector's Name: JDV1

Type of Probe: (circle one) M2 M5 M17 Probe Length: 5 ft.

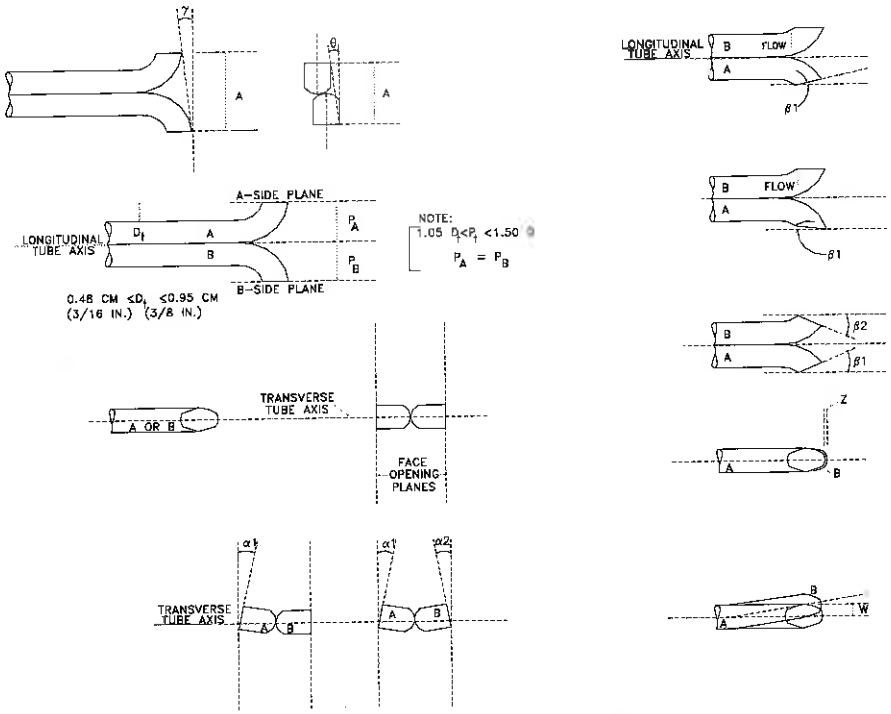

Pitot tube assembly level? x yes ____ no

Pitot tube openings damaged? ____ yes (explain below) x no

a_1 = 0.5 ° (<10°), a_2 = 0.5 ° (<10°) z = A sin g = 0.008 (in.); (<0.125 in.)

b_1 = 1 ° (<5°), b_2 = 0.5 ° (<5°) w = A sin q = 0.033 (in.); (<0.03125 in.)

γ = 0.5 °, θ = 2 °, A = 0.935 (in.) P_A = 0.468 (in.), P_B = 0.468 (in.), D_t = 0.375 (in.)

Calibration required? ____ yes x no

Nozzle Calibration

Date: 9/22/2015

Nozzle ID No.: 7

Analyst: ALD

Material/Type: Teflon Coated

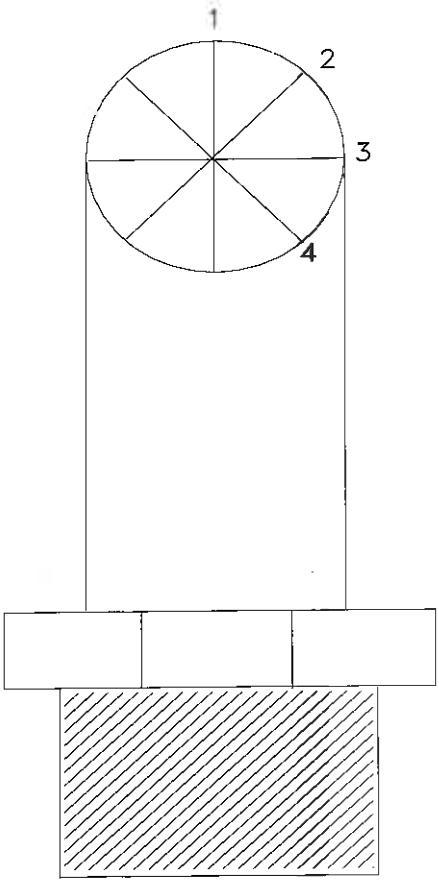

0.271	1
0.270	2
0.272	3
0.272	4

Valid Data

Average
0.271

Dry Gas Meter Calibration Data

Dry Gas Meter No.	CM18	Date:	September 28, 2015
Standard Meter No.	14159239	Calibrated By:	EWK
Standard Meter (Y)	0.9979	Barometric Pressure:	29.29

Run Number		Orifice Setting in H_2O Chg (H)	Standard Meter Gas Volume vr	Dry Gas Meter Gas Volume vd	Standard Meter Temp. F° tr	Dry Gas Meter Inlet Temp. F° tdi	Dry Gas Meter Outlet Temp. F° tdo	Dry Gas Meter Avg. Temp. F° td	Time Min	Time Sec	Y	Chg (H)
Final			11.743	18.452	69	72	71					
Initial			6.663	13.437	69	71	71					
Difference	1	0.20	5.080	5.015	69	72	71	71	18	26	1.015	1.515
Final			17.655	24.307	69	73	71					
Initial			11.878	18.596	69	71	71					
Difference	2	0.50	5.777	5.711	69	72	71	72	13	12	1.013	1.501
Final			24.761	31.336	70	73	72					
Initial			17.883	24.540	69	72	72					
Difference	3	0.70	6.878	6.796	70	73	72	72	13	36	1.013	1.575
Final			32.695	39.185	70	74	72					
Initial			24.909	31.486	70	73	72					
Difference	4	0.90	7.786	7.699	70	74	72	73	13	24	1.012	1.535
Final			38.194	44.638	70	75	73					
Initial			32.926	39.425	70	74	72					
Difference	5	1.20	5.268	5.213	70	75	73	74	7	55	1.012	1.558
Final			92.121	76.045	70	72	70					
Initial			86.866	70.866	69	70	70					
Difference	6	2.00	5.255	5.179	70	71	70	71	6	23	1.009	1.703
									Average		**1.012**	**1.565**

Stack Temperature Sensor Calibration

Meter Box # : CM18 *Name :* EWK

Ambient Temperature : 75 °F *Date :* September 28, 2015

Calibrator Model # : CL23A

Serial # : T-249465

Date Of Certification : December 26, 2014

Primary Standards Directly Traceable National Institute of Standards and Technology (NIST)

Reference Source Temperature (° F)	Test Thermometer Temperature (° F)	Temperature Difference %
0	-2	0.4
250	247	0.4
600	596	0.4
1200	1198	0.1

$$\frac{(\text{Ref. Temp., °F} + 460) - (\text{Test Therm. Temp., °F} + 460)}{\text{Ref. Temp., °F} + 460} * 100 <= 1.5\ \%$$

Meter Box Calibration

Dry Gas Meter Calibration Data

Dry Gas Meter No.	CM18	Date:	October 14, 2015
Standard Meter No.	4319699	Calibrated By:	ALD
Standard Meter (Y)	1.0053	Barometric Pressure:	29.09

Run Number		Orifice Setting in H_2O Chg (H)	Standard Meter Gas Volume vr	Dry Gas Meter Gas Volume vd	Standard Meter Temp. F° tr	Dry Gas Meter Inlet Temp. F° tdi	Dry Gas Meter Outlet Temp. F° tdo	Dry Gas Meter Avg. Temp. F° td	Time Min	Time Sec	Y	Chg (H)
Final			959.096	692.013	62	65	65					
Initial			953.939	686.807	63	65	65					
Difference	1	0.20	5.157	5.206	63	65	65	65	19	1	1.000	1.532
Final			964.685	697.623	62	66	65					
Initial			959.497	692.414	63	65	65					
Difference	2	0.50	5.188	5.209	63	66	65	65	12	16	1.005	1.574
Final			970.468	703.434	62	65	65					
Initial			965.115	698.055	63	65	65					
Difference	3	0.70	5.353	5.379	63	65	65	65	10	40	1.003	1.566
Final			976.065	709.059	62	66	65					
Initial			970.895	703.855	63	65	65					
Difference	4	0.90	5.170	5.204	63	66	65	65	9	7	1.002	1.576
Final			981.600	714.630	62	67	65					
Initial			976.419	709.418	63	66	65					
Difference	5	1.20	5.181	5.212	63	67	65	66	8	7	1.002	1.657
Final			953.560	686.426	62	65	65					
Initial			948.145	681.020	62	64	64					
Difference	6	2.00	5.415	5.406	62	65	65	65	6	36	1.007	1.672
									Average		**1.003**	**1.596**

Stack Temperature Sensor Calibration

Meter Box # : CM18 *Name :* ALD

Ambient Temperature : 66 °F *Date :* October 14, 2015

Calibrator Model # : CL23A

Serial # : T-249465

Date Of Certification : December 26, 2014

Primary Standards Directly Traceable National Institute of Standards and Technology (NIST)

Reference Source Temperature (° F)	Test Thermometer Temperature (° F)	Temperature Difference %
0	-2	0.4
250	247	0.4
600	596	0.4
1200	1198	0.1

$$\frac{(\text{Ref. Temp., °F} + 460) - (\text{Test Therm. Temp., °F} + 460)}{\text{Ref. Temp., °F} + 460} * 100 <= 1.5\ \%$$

S TYPE PITOT TUBE INSPECTION WORKSHEET

Pitot Tube No: 170 Date: 4/24/2015 Inspector's Name: JCS1

Type of Probe: (circle one) M2 M5 M17 Probe Length: 4 ft.

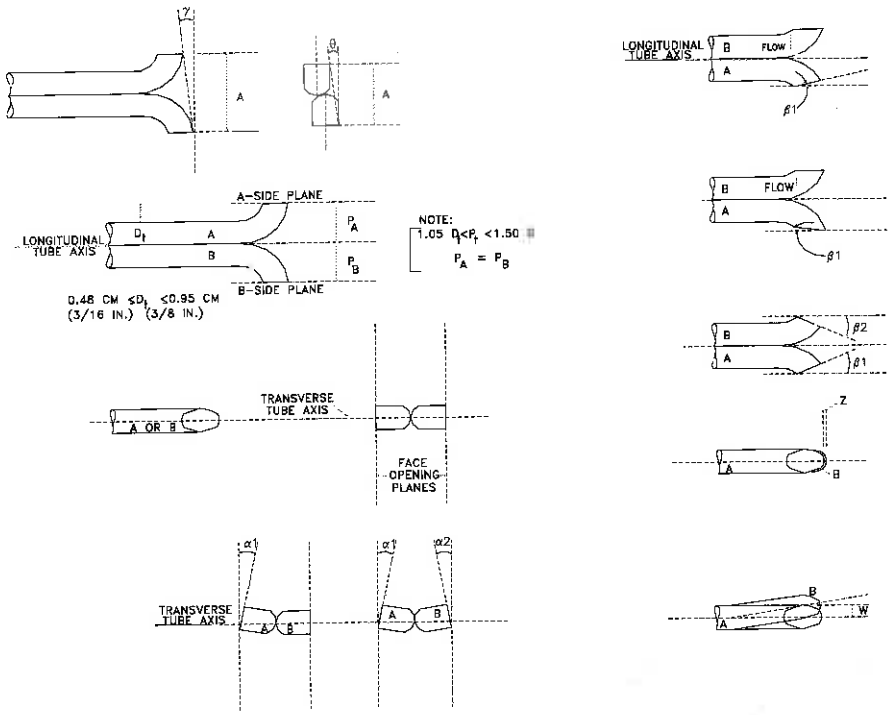

Pitot tube assembly level? x yes ____ no

Pitot tube openings damaged? ____ yes (explain below) x no

a_1 = 0 ° (<10°), a_2 = 1.5 ° (<10°) z = A sin g = 0.020 (in.); (<0.125 in.)

b_1 = 2 ° (<5°), b_2 = 1 ° (<5°) w = A sin q = 0.030 (in.); (<0.03125 in.)

γ = 1 °, θ = 1.5 °, A = 1.130 (in.) P_A = 0.565 (in.), P_B = 0.565 (in.), D_t = 0.375 (in.)

Calibration required? ____ yes x no

S TYPE PITOT TUBE INSPECTION WORKSHEET

Pitot Tube No: 170 Date: 10/9/2015 Inspector's Name: DJK

Type of Probe: (circle one) M2 M5 M17 Probe Length: 4 ft.

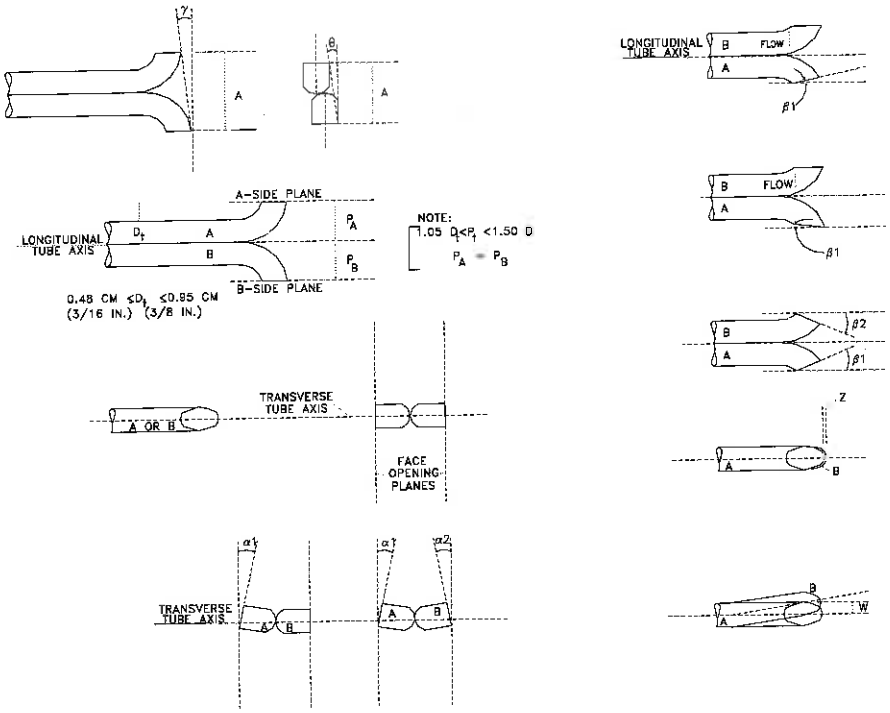

Pitot tube assembly level? x yes ____ no

Pitot tube openings damaged? ____ yes (explain below) x no

a_1 = 1.5 ° (<10°), a_2 = 3 ° (<10°) z = A sin g = 0.020 (in.); (<0.125 in.)

b_1 = 0.5 ° (<5°), b_2 = 0.5 ° (<5°) w = A sin q = 0.029 (in.); (<0.03125 in.)

γ = 1 °, θ = 1.5 °, A = 1.126 (in.) P_A = 0.563 (in.), P_B = 0.563 (in.), D_t = 0.375 (in.)

Calibration required? ____ yes x no

Nozzle Calibration

Date: 8/12/2015

Analyst: MDK

Nozzle ID No.: 5T-8

Material/Type: Teflon Coated

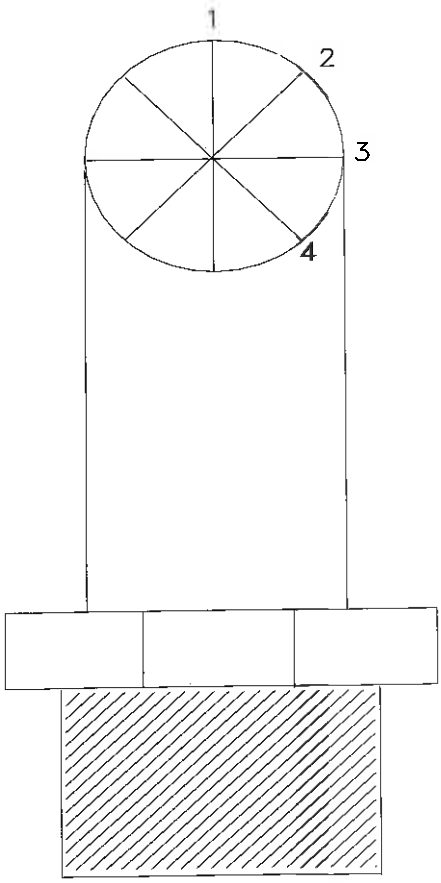

0.239	1
0.240	2
0.238	3
0.238	4

Valid Data

Average
0.239

WEIGHING SOLUTIONS INC.

SALES-SERVICE-RENTALS
3310-14 N. HARLEM AVENUE
CHICAGO, IL 60634

PHONE
773-836-2800
FAX
773-836-2891

CALIBRATION REPORT

Company Name MOSTACCI PLATT
Date OCTOBER 14, 2015
Location LAB
Weight Set # E559

Model # E 064
Serial/ID # G045112105123E
Manufacturer Ohaus
Tolerance ± 0.05%

		Before Cal.:	After Cal.:
Capacity	62 g		
Readability	0.1 mg		
Weight # 1	0.1 mg	0.0001 g	0.0001 g
Weight # 2	1 g	1.0000 g	1.0000 g
Weight # 3	10 g	10.0000 g	10.0000 g
Weight # 4	20 g	20.0002 g	20.0000 g
Weight # 5	50 g	50.0005 g	50.0000 g

	Accept	Reject
Linearity	✓	
Cornerload	✓	
Repeatability	✓	
Hysteresis	✓	

Comments Cleaned and adjusted calibration to N.I.S.T. specifications.

Technician

678
State Of IL Registration

STATE OF ILLINOIS
WEIGHING SOLUTIONS
NO. 1604
REGISTERED SCALE AGENCY

State of Illinois

Department of Agriculture

Registration Number: 1604

Expires: 02/28/2016

Bureau of Weights and Measures

Registered Service Company Certificate of Registration

This is to certify that the named company has met all requirements for registration with this office for weighing devices.

Bureau Chief
Bureau of Weights & Measures

Issued To:

WEIGHING SOLUTIONS, INC.
3310-14 N HARLEM AVE
CHICAGO, IL 60634

©1998 GOES 3522
All Rights Reserved

LITHO. IN U.S.A.

Pre/Post	Date	Time	Analyst	Ambient Temperature degrees F	Relative Humidity %	Barometric Pressure inches Hg	Calibration Standard 50.0000g	% Error	Calibration Standard 5.0000g	% Error	Calibration Standard 0.5000g	% Error
Pre	10/5/2015	8:00 AM	JLS	69	34.0	29.50	49.9997 g	0.00	4.9999 g	0.00	0.5001 g	-0.02
Post	10/5/2015	3:30 PM	JLS	72	33.0	29.50	49.9997 g	0.00	5.0000 g	0.00	0.5000 g	0.00
Pre	10/6/2015	7:30 AM	JLS	69	36.0	29.47	49.9998 g	0.00	5.0000 g	0.00	0.5003 g	-0.06
Post	10/6/2015	3:00 PM	JLS	73	33.0	29.50	49.9995 g	0.00	5.0000 g	0.00	0.5000 g	0.00
Pre	10/7/2015											
Post	10/7/2015											
Pre	10/8/2015											
Post	10/8/2015											
Pre	10/9/2015											
Post	10/9/2015											
Pre	10/12/2015	7:00 AM	JMG	70	28.0	29.08	49.9996 g	0.00	5.0000 g	0.00	0.5000 g	0.00
Post	10/12/2015	3:00 PM	JMG	70	28.0	29.00	49.9995 g	0.00	5.0000 g	0.00	0.5000 g	0.00
Pre	10/13/2015	8:00 AM	JMG	70	25.0	29.00	49.9998 g	0.00	5.0000 g	0.00	0.5000 g	0.00
Post	10/13/2015	3:00 PM	JMG	70	25.0	29.00	49.9998 g	0.00	5.0000 g	0.00	0.5000 g	0.00
Pre	10/14/2015	8:00 AM	JMG	67	26.0	29.26	49.9998 g	0.00	5.0000 g	0.00	0.5001 g	-0.02
Post	10/14/2015	2:30 PM	JLS	70	24.0	29.35	49.9993 g	0.00	4.9999 g	0.00	0.5003 g	-0.06
Pre	10/15/2015	7:00 AM	JMG	69	25.0	29.32	49.9998 g	0.00	4.9999 g	0.00	0.5001 g	-0.02
Post	10/15/2015	1:30 PM	JMG	69	25.0	29.32	49.9998 g	0.00	4.9999 g	0.00	0.5001 g	-0.02
Pre	10/16/2015	8:00 AM	JLS	66	24.0	29.53	49.9994 g	0.00	5.0000 g	0.00	0.5004 g	-0.08
Post	10/16/2015	2:30 PM	JLS	68	24.0	29.62	49.9991 g	0.00	5.0001 g	0.00	0.5000 g	0.00
Pre	10/19/2015											
Post	10/19/2015											
Pre	10/20/2015	8:00 AM	JMG	70	23.0	29.41	50.0001 g	0.00	5.0000 g	0.00	0.5002 g	-0.04
Post	10/20/2015	9:00 AM	JMG	70	23.0	29.41	50.0001 g	0.00	5.0000 g	0.00	0.5002 g	-0.04
Pre	10/21/2015	9:00 AM	JMG	69	26.0	29.44	49.9999 g	0.00	5.0002 g	0.00	0.5002 g	-0.04
Post	10/21/2015	10:00 AM	JMG	70	25.0	29.44	49.9999 g	0.00	5.0002 g	0.00	0.5002 g	-0.04
Pre	10/22/2015	2:00 PM	JMG	68	24.0	29.50	49.9999 g	0.00	5.0001 g	0.00	0.5002 g	-0.04
Post	10/22/2015	2:15 PM	JMG	68	24.0	29.50	49.9999 g	0.00	5.0001 g	0.00	0.5002 g	-0.04
Pre	10/23/2015	8:00 AM	JMG	68	27.0	29.56	49.9999 g	0.00	5.0001 g	0.00	0.5000 g	0.00
Post	10/23/2015	3:00 PM	JMG	68	28.0	29.56	49.9999 g	0.00	5.0001 g	0.00	0.5000 g	0.00

Balance ID OHAUS Model Explorer
GO451121051238

Appendix H - Gas Cylinder Certifications

Airgas

Airgas Specialty Gases
12722 South Wentworth Avenue
Chicago, IL 60628
(773) 785-3000 Fax: (773) 785-1928
Airgas.com

CERTIFICATE OF ANALYSIS
Grade of Product: EPA Protocol

Part Number:	E03NI78E15A1066	Reference Number:	54-124500021-7
Cylinder Number:	CC89223	Cylinder Volume:	151.1 CF
Laboratory:	ASG - Chicago - IL	Cylinder Pressure:	2015 PSIG
PGVP Number:	B12015	Valve Outlet:	590
Gas Code:	CO2,O2,BALN	Certification Date:	Jun 23, 2015

Expiration Date: Jun 23, 2023

Certification performed in accordance with "EPA Traceability Protocol for Assay and Certification of Gaseous Calibration Standards (May 2012)" document EPA 600/R-12/531, using the assay procedures listed. Analytical Methodology does not require correction for analytical interference. This cylinder has a total analytical uncertainty as stated below with a confidence level of 95%. There are no significant impurities which affect the use of this calibration mixture. All concentrations are on a volume/volume basis unless otherwise noted.

Do Not Use This Cylinder below 100 psig, i.e. 0.7 megapascals.

ANALYTICAL RESULTS

Component	Requested Concentration	Actual Concentration	Protocol Method	Total Relative Uncertainty	Assay Dates
CARBON DIOXIDE	10.00 %	9.926 %	G1	+/- 1.0% NIST Traceable	06/23/2015
OXYGEN	12.00 %	11.98 %	G1	+/- 1.0% NIST Traceable	06/23/2015
NITROGEN	Balance				

CALIBRATION STANDARDS

Type	Lot ID	Cylinder No	Concentration	Uncertainty	Expiration Date
NTRM	06120402	CC184369	19.66 % CARBON DIOXIDE/NITROGEN	+/- 0.5%	May 01, 2016
NTRM	06120204	CC195893	20.90 % OXYGEN/NITROGEN	+/- 0.4%	Dec 01, 2015

ANALYTICAL EQUIPMENT

Instrument/Make/Model	Analytical Principle	Last Multipoint Calibration
CO2-1 HORIBA VIA-510 V1E3H7P5	NDIR	Jun 12, 2015
O2-1 HORIBA MPA-510 3VUYL9NR	Paramagnetic	Jun 16, 2015

Triad Data Available Upon Request

Approved for Release

Airgas

Airgas Specialty Gases
12722 South Wentworth Avenue
Chicago, IL 60628
(773) 785-3000 Fax: (773) 785-1928
www.airgas.com

CERTIFICATE OF ANALYSIS
Grade of Product: EPA Protocol

Part Number:	E03NI59E15A3452	Reference Number:	54-124361680-5
Cylinder Number:	CC55028	Cylinder Volume:	159.0 CF
Laboratory:	ASG - Chicago - IL	Cylinder Pressure:	2015 PSIG
PGVP Number:	B12013	Valve Outlet:	590
Gas Code:	CO2,O2	Certification Date:	Feb 25, 2013

Expiration Date: Feb 25, 2021

Certification performed in accordance with "EPA Traceability Protocol for Assay and Certification of Gaseous Calibration Standards (May 2012)" document EPA 600/R-12/531, using the assay procedures listed. Analytical Methodology does not require correction for analytical interference. This cylinder has a total analytical uncertainty as stated below with a confidence level of 95%. There are no significant impurities which affect the use of this calibration mixture. All concentrations are on a volume/volume basis unless otherwise noted.

Do Not Use This Cylinder below 100 psig, i.e. 0.7 megapascals.

ANALYTICAL RESULTS

Component	Requested Concentration	Actual Concentration	Protocol Method	Total Relative Uncertainty	Assay Dates
CARBON DIOXIDE	19.00 %	18.63 %	G1	+/- 1.4% NIST Traceable	02/25/2013
OXYGEN	22.00 %	21.96 %	G1	+/- 0.7% NIST Traceable	02/25/2013
NITROGEN	Balance				

CALIBRATION STANDARDS

Type	Lot ID	Cylinder No	Concentration	Uncertainty	Expiration Date
NTRM/CO2	06120405	CC184974	19.66 % CARBON DIOXIDE/NITROGEN	+/- 0.5%	May 01, 2016
NTRM/O2	06120202	CC195927	20.9 % OXYGEN/NITROGEN	+/- 0.4%	Dec 01, 2015

ANALYTICAL EQUIPMENT

Instrument/Make/Model	Analytical Principle	Last Multipoint Calibration
CO2-1 HORIBA VIA-510 V1E3H7P5	NDIR	Jan 28, 2013
O2-1 HORIBA MPA-510 3VUYL9NR	Paramagnetic	Feb 20, 2013

Triad Data Available Upon Request

Notes:

Approved for Release

Appendix I – Visible Emissions Data and Reader Certification

MOSTARDI PLATT

Visible Emissions Record Form

Date 10 / 7 / 15
Site Behr Iron & Metal
Rockford, Il

USEPA Method 9

Test # 1

Compass Heading

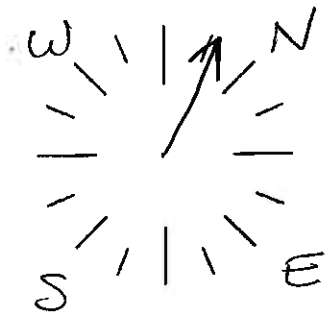

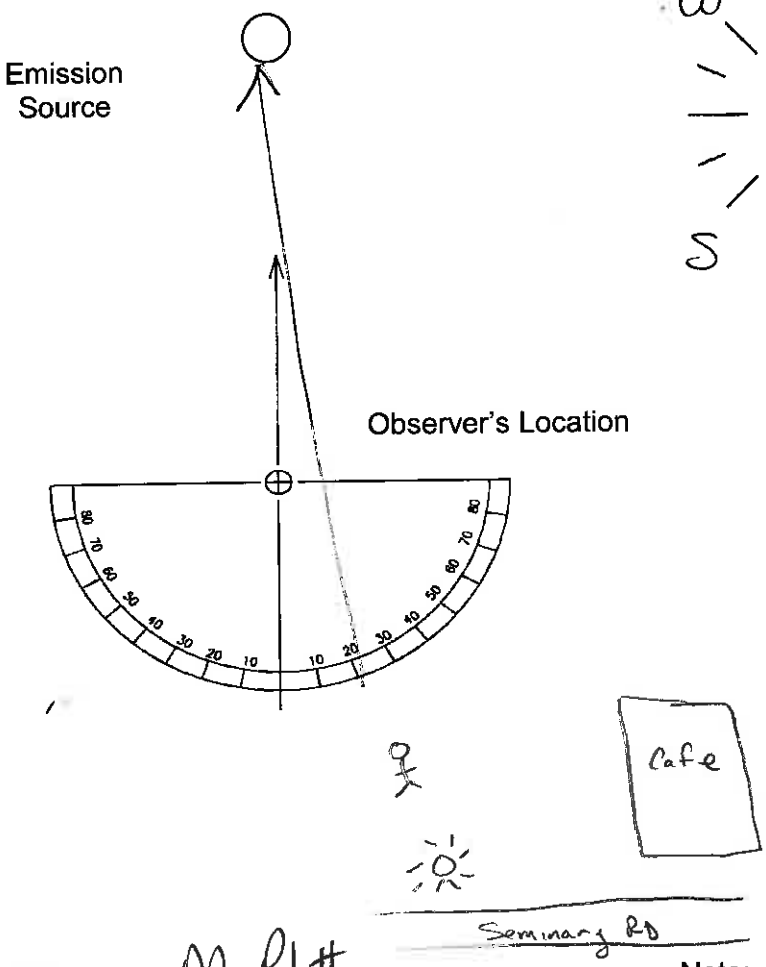

Observer: M. Platt

Comments: 1. In Compliance
2. N 3. 5mph
4. No visable Plume
5 NORMAL

Note:
1. Sun Position
2. Wind Direction
3. Wind Speed
4. Plume Type
5. Operating Level

EPA Reference Method 9

Visible Emissions Observation Record Form

Sheet: 1 of 1

Date: 10/7/15

Facility Location:
RKA Associates, Inc.
Behr Iron & Metal
Rockford, IL
Blue Baghouse Stack

Observer: M. Platt
Observation Start: 08:34
End: 09:34

Observation Point:
Parking Lot Southeast of source by cube

Distance from Source: 125 ft.
Source Height: 30 ft.
Emission Color: NONE
Background: Blue Sky

Sky Condition: Clear

Sun Position: In Compliance
Temperature: 65 °F
Wind Direction: N at 5 mph
Reading Conditions: Good

Operating Conditions: NORMAL

Plume Description: No Visible Plume
Attached or Detached

Signature: Martin E. Platt
Certification Date: 9/2/15

><	0	15	30	45	Notes	><	0	15	30	45	Notes
0	0	0	0	0		30	0	0	0	0	
1	0	0	0	0		31	0	0	0	0	
2	0	0	0	0		32	0	0	0	0	
3	0	0	0	0		33	0	0	0	0	
4	0	0	0	0		34	0	0	0	0	
5	0	0	0	0		35	0	0	0	0	
6	0	0	0	0		36	0	0	0	0	
7	0	0	0	0		37	0	0	0	0	
8	0	0	0	0		38	0	0	0	0	
9	0	0	0	0		39	0	0	0	0	
10	0	0	0	0		40	0	0	0	0	
11	0	0	0	0		41	0	0	0	0	
12	0	0	0	0		42	0	0	0	0	
13	0	0	0	0		43	0	0	0	0	
14	0	0	0	0		44	0	0	0	0	
15	0	0	0	0		45	0	0	0	0	
16	0	0	0	0		46	0	0	0	0	
17	0	0	0	0		47	0	0	0	0	
18	0	0	0	0		48	0	0	0	0	
19	0	0	0	0		49	0	0	0	0	
20	0	0	0	0		50	0	0	0	0	
21	0	0	0	0		51	0	0	0	0	
22	0	0	0	0		52	0	0	0	0	
23	0	0	0	0		53	0	0	0	0	
24	0	0	0	0		54	0	0	0	0	
25	0	0	0	0		55	0	0	0	0	
26	0	0	0	0		56	0	0	0	0	
27	0	0	0	0		57	0	0	0	0	
28	0	0	0	0		58	0	0	0	0	
29	0	0	0	0		59	0	0	0	0	

Comments / Process Information:

Notes:

Notes:

MOSTARDI PLATT

Visible Emissions Record Form

USEPA Method 9

Test # 2

Date 10/7/15
Site Behr Iron & Metal Rockford, IL

Compass Heading

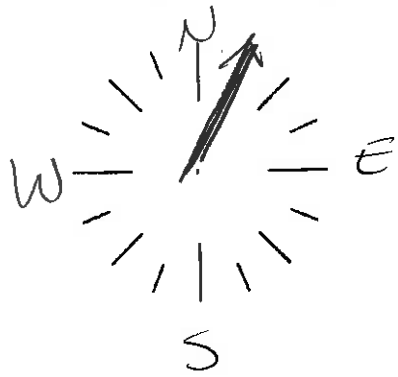

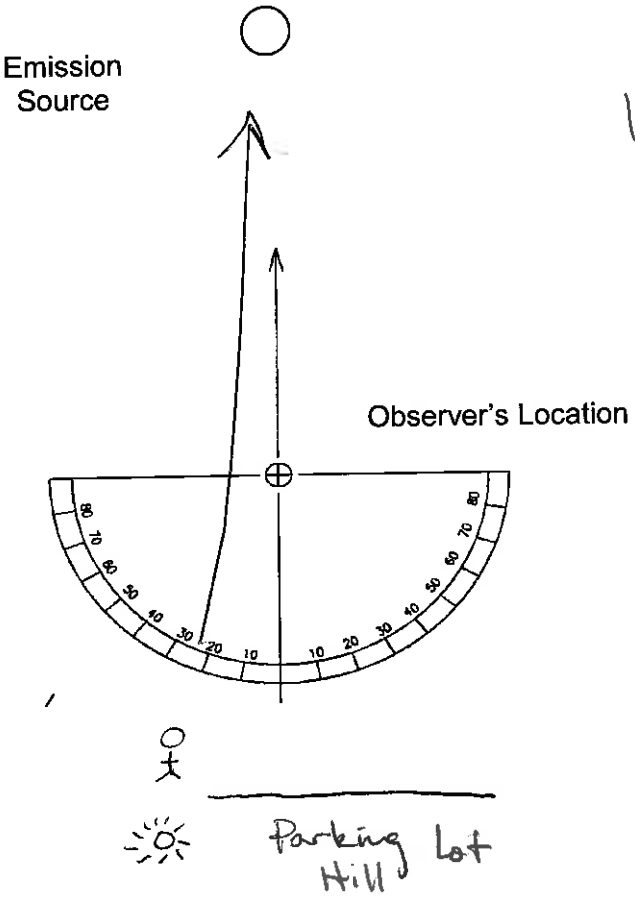

Observer: M. Platt

Comments: 1. In Compliance
2. N 3. 5mph
4. No visable Plume
5. Normal

Note:
1. Sun Position
2. Wind Direction
3. Wind Speed
4. Plume Type
5. Operating Level

EPA Reference Method 9

Visible Emissions Observation Record Form

Sheet: 1 of 1

Date: 10/7/15

Facility Location:
RK & Associates, Inc.
Behr Iron & Metal
Rockford, IL
Blue Baghouse Stack

Observer: M. Platt
Observation Start: 11:53
End: 12:53

Observation Point:
Parking lot Southeast of source by the hill

Distance from Source: 100 ft.
Source Height: 30 ft.
Emission Color: NONE
Background: Blue Sky

Sky Condition: Clear

Sun Position: In Compliance
Temperature: 70 °F
Wind Direction: N at 5 mph
Reading Conditions: GOOD

Operating Conditions: NORMAL

Plume Description: No visable Plume
Attached or Detached

Signature: Matt E. Platt
Certification Date: 9/2/15

><	0	15	30	45	Notes	><	0	15	30	45	Notes
0	0	0	0	0		30	0	0	0	0	
1	0	0	0	0		31	0	0	0	0	
2	0	0	0	0		32	0	0	0	0	
3	0	0	0	0		33	0	0	0	0	
4	0	0	0	0		34	0	0	0	0	
5	0	0	0	0		35	0	0	0	0	
6	0	0	0	0		36	0	0	0	0	
7	0	0	0	0		37	0	0	0	0	
8	0	0	0	0		38	0	0	0	0	
9	0	0	0	0		39	0	0	0	0	
10	0	0	0	0		40	0	0	0	0	
11	0	0	0	0		41	0	0	0	0	
12	0	0	0	0		42	0	0	0	0	
13	0	0	0	0		43	0	0	0	0	
14	0	0	0	0		44	0	0	0	0	
15	0	0	0	0		45	0	0	0	0	
16	0	0	0	0		46	0	0	0	0	
17	0	0	0	0		47	0	0	0	0	
18	0	0	0	0		48	0	0	0	0	
19	0	0	0	0		49	0	0	0	0	
20	0	0	0	0		50	0	0	0	0	
21	0	0	0	0		51	0	0	0	0	
22	0	0	0	0		52	0	0	0	0	
23	0	0	0	0		53	0	0	0	0	
24	0	0	0	0		54	0	0	0	0	
25	0	0	0	0		55	0	0	0	0	
26	0	0	0	0		56	0	0	0	0	
27	0	0	0	0		57	0	0	0	0	
28	0	0	0	0		58	0	0	0	0	
29	0	0	0	0		59	0	0	0	0	

Comments / Process Information:

Notes:

Notes:

MOSTARDI PLATT

Visible Emissions Record Form

USEPA Method 9

Test #3

Date 10 / 7 / 15
Site Behr Iron + Metal
Rockford, IL

Compass Heading

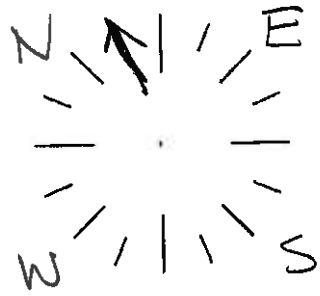

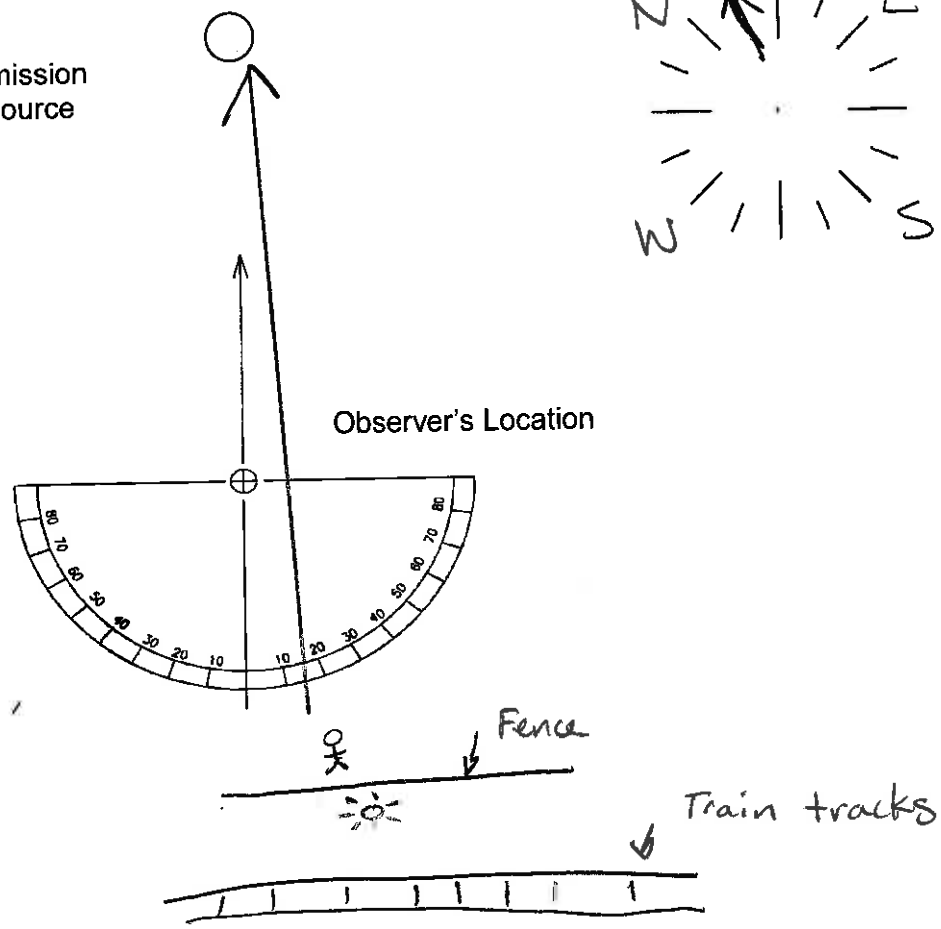

Observer: M. Platt

Comments: 1. In Compliance
2. N 3. 5mph
4. No Visable Plume
5 Normal

Note:
1. Sun Position
2. Wind Direction
3. Wind Speed
4. Plume Type
5. Operating Level

EPA Reference Method 9

Visible Emissions Observation Record Form

Sheet: 1 of 1

Date: 10/7/15

Facility Location:
RK & Associates, Inc.
Behr Iron & Metal
Rockford, IL
Blue Baghouse Stack

Observer: M. Platt
Observation Start: 14:35
End: 15:35

Test #3

Observation Point:
Southwest of the Source in Parking lot in front of the Fence

Distance from Source: 30 ft.
Source Height: 100 ft.
Emission Color: NONE
Background: Blue Sky

Sky Condition: Clear

Sun Position: In Compliance
Temperature: 70 °F
Wind Direction: N at 5 mph
Reading Conditions: GOOD

Operating Conditions: NORMAL

Plume Description: No Visable Plume
Attached or Detached

Signature: Mark E. Platt
Certification Date: 9/2/15

><	0	15	30	45	Notes	><	0	15	30	45	Notes
0	0	0	0	0		30	0	0	0	0	
1	0	0	0	0		31	0	0	0	0	
2	0	0	0	0		32	0	0	0	0	
3	0	0	0	0		33	0	0	0	0	
4	0	0	0	0		34	0	0	0	0	
5	0	0	0	0		35	0	0	0	0	
6	0	0	0	0		36	0	0	0	0	
7	0	0	0	0		37	0	0	0	0	
8	0	0	0	0		38	0	0	0	0	
9	0	0	0	0		39	0	0	0	0	
10	0	0	0	0		40	0	0	0	0	
11	0	0	0	0		41	0	0	0	0	
12	0	0	0	0		42	0	0	0	0	
13	0	0	0	0		43	0	0	0	0	
14	0	0	0	0		44	0	0	0	0	
15	0	0	0	0		45	0	0	0	0	
16	0	0	0	0		46	0	0	0	0	
17	0	0	0	0		47	0	0	0	0	
18	0	0	0	0		48	0	0	0	0	
19	0	0	0	0		49	0	0	0	0	
20	0	0	0	0		50	0	0	0	0	
21	0	0	0	0		51	0	0	0	0	
22	0	0	0	0		52	0	0	0	0	
23	0	0	0	0		53	0	0	0	0	
24	0	0	0	0		54	0	0	0	0	
25	0	0	0	0		55	0	0	0	0	
26	0	0	0	0		56	0	0	0	0	
27	0	0	0	0		57	0	0	0	0	
28	0	0	0	0		58	0	0	0	0	
29	0	0	0	0		59	0	0	0	0	

Comments / Process Information:

Notes:

Notes:

MOSTARDI PLATT

Visible Emissions Record Form

USEPA Method 9

Test #: 4

Date 10/7/15
Site Behr Iron + Metal
Rockford, IL

Compass Heading

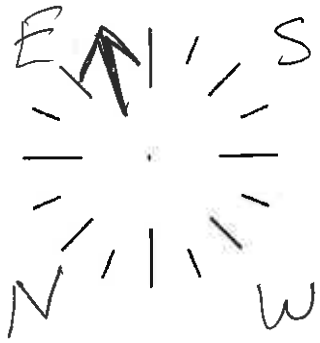

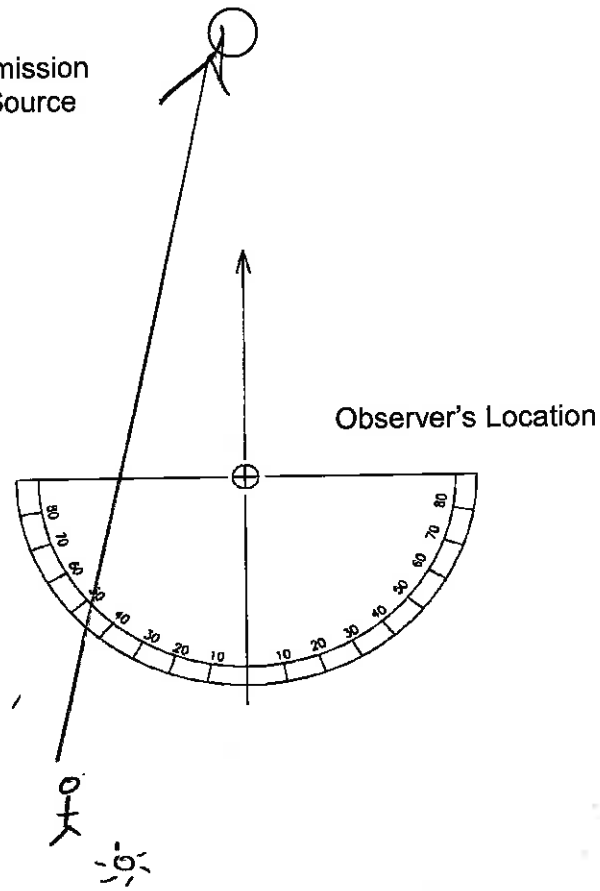

Parts Dept

Observer: M. Platt

Comments: 1. In Compliance
2. N 3. 5mph
4. No Visable Plume
5. NORMAL

Note:
1. Sun Position
2. Wind Direction
3. Wind Speed
4. Plume Type
5. Operating Level

EPA Reference Method 9

Visible Emissions Observation Record Form

Sheet: 1 of 1

Date: 10/7/15

Facility Location:
RK & Associates, Inc.
Behr Iron & Metal
Rockford, IL
Blue Baghouse Stack

Test #4

Observer: M. Plant
Observation Start: 17:15
End: 18:15

Observation Point:
Next to the Parts Dept on the North side of plant

Distance from Source: 120 ft.
Source Height: 30 ft.
Emission Color: NONE
Background: Blue Sky

Sky Condition: Clear

Sun Position: In Compliance
Temperature: 70 °F
Wind Direction: N at 5 mph
Reading Conditions: GOOD

Operating Conditions: NORMAL

Plume Description: NO VISABLE Plume
Attached or Detached

Signature: Martin E. Plant
Certification Date: 9/2/15

><	0	15	30	45	Notes
0	0	0	0	0	
1	0	0	0	0	
2	0	0	0	0	
3	0	0	0	0	
4	0	0	0	0	
5	0	0	0	0	
6	0	0	0	0	
7	0	0	0	0	
8	0	0	0	0	
9	0	0	0	0	
10	0	0	0	0	
11	0	0	0	0	
12	0	0	0	0	
13	0	0	0	0	
14	0	0	0	0	
15	0	0	0	0	
16	0	0	0	0	
17	0	0	0	0	
18	0	0	0	0	
19	0	0	0	0	
20	0	0	0	0	
21	0	0	0	0	
22	0	0	0	0	
23	0	0	0	0	
24	0	0	0	0	
25	0	0	0	0	
26	0	0	0	0	
27	0	0	0	0	
28	0	0	0	0	
29	0	0	0	0	

><	0	15	30	45	Notes
30	0	0	0	0	
31	0	0	0	0	
32	0	0	0	0	
33	0	0	0	0	
34	0	0	0	0	
35	0	0	0	0	
36	0	0	0	0	
37	0	0	0	0	
38	0	0	0	0	
39	0	0	0	0	
40	0	0	0	0	
41	0	0	0	0	
42	0	0	0	0	
43	0	0	0	0	
44	0	0	0	0	
45	0	0	0	0	
46	0	0	0	0	
47	0	0	0	0	
48	0	0	0	0	
49	0	0	0	0	
50	0	0	0	0	
51	0	0	0	0	
52	0	0	0	0	
53	0	0	0	0	
54	0	0	0	0	
55	0	0	0	0	
56	0	0	0	0	
57	0	0	0	0	
58	0	0	0	0	
59	0	0	0	0	

Comments / Process Information:

Notes:

Notes:

VISIBLE EMISSIONS EVALUATOR

Martin Platt

This is to certify that the above named observer has met the specifications of Federal Reference Method 9 and is qualified as a visible emissions evaluator. Maximum deviation on white and black smoke did not exceed 7.5% opacity and no single error exceeding 15% opacity was incurred during the certification test conducted by Eastern Technical Associates, Inc. of Raleigh, N.C. This certificate is valid for six months from date of issue.

433050
Certificate #

PLA465227
Student ID Number

9/2/2015
Date of Certification

Valparaiso, IN
Location

3/3/2016
Certification Expiration Date

NonETA
Last Lecture

Marty Hughes
Director of Training

END OF THE REPORT