LOOP LLC

137 Northpark Blvd. • Covington, LA 70433
TELEPHONE (985) 276-6100 • FAX (985) 276-6279

August 10, 2015

Ms. Tegan Treadaway, Assistant Secretary
Louisiana Department of Environmental Quality
Office of Environmental Services
Water Permits Division
P.O. Box 4313
Baton Rouge, Louisiana 70821-4313

RE: Addendum to LPDES Permit Application
LOOP LLC
Deepwater Port Complex
LPDES/NPDES Permit No. LA00049492
Agency Interest No. 4634

Dear Ms. Treadaway:

LOOP LLC (LOOP), Deepwater Port Complex, herewith submits an addendum to the Louisiana Pollutant Discharge Elimination System (LPDES) permit application which was submitted to the Louisiana Department of Environmental Quality (DEQ) and U.S. Environmental Protection Agency (EPA) on March 26, 2013.

LOOP would like to establish a new outfall (029) for reverse osmosis (RO) reject water from the Control Platform at the Marine Terminal. LOOP plans to install a RO watermaker/seawater desalination system to convert seawater into fresh water for potable and industrial purposes by the first quarter of 2016. The system will be located at LOOP's Marine Terminal. RO reject water will be discharged to the Gulf of Mexico. The proposed coordinates for Outfall 029 are latitude 28° 53' 06" north and longitude 90° 01' 30" west. The flow rate is expected to be continuous and estimated at 44,000 gallons per day (GPD). The effluent quality is expected to be free of any pollutants except for concentrated salts and minerals from the sea water. No water treatment chemicals are expected to be added to the system.

A revised Water/Wastewater Flow Balance Diagram with proposed Outfall 029 is attached. Please make this information part of the administrative record and establish the new outfall in the permit renewal.

If you have any questions or need further information, please feel free to contact me at (985) 276-6299.

Sincerely,

Cynthia A. Gardner-LeBlanc

Cynthia A. Gardner-LeBlanc
Manager Regulatory Affairs

cc: Claudia V. Hosch, Associate Director, EPA
Dale Sittig, Executive Director, LOTA
Captain Dave McClellan, Captain of the Port, USCG MSU Morgan City

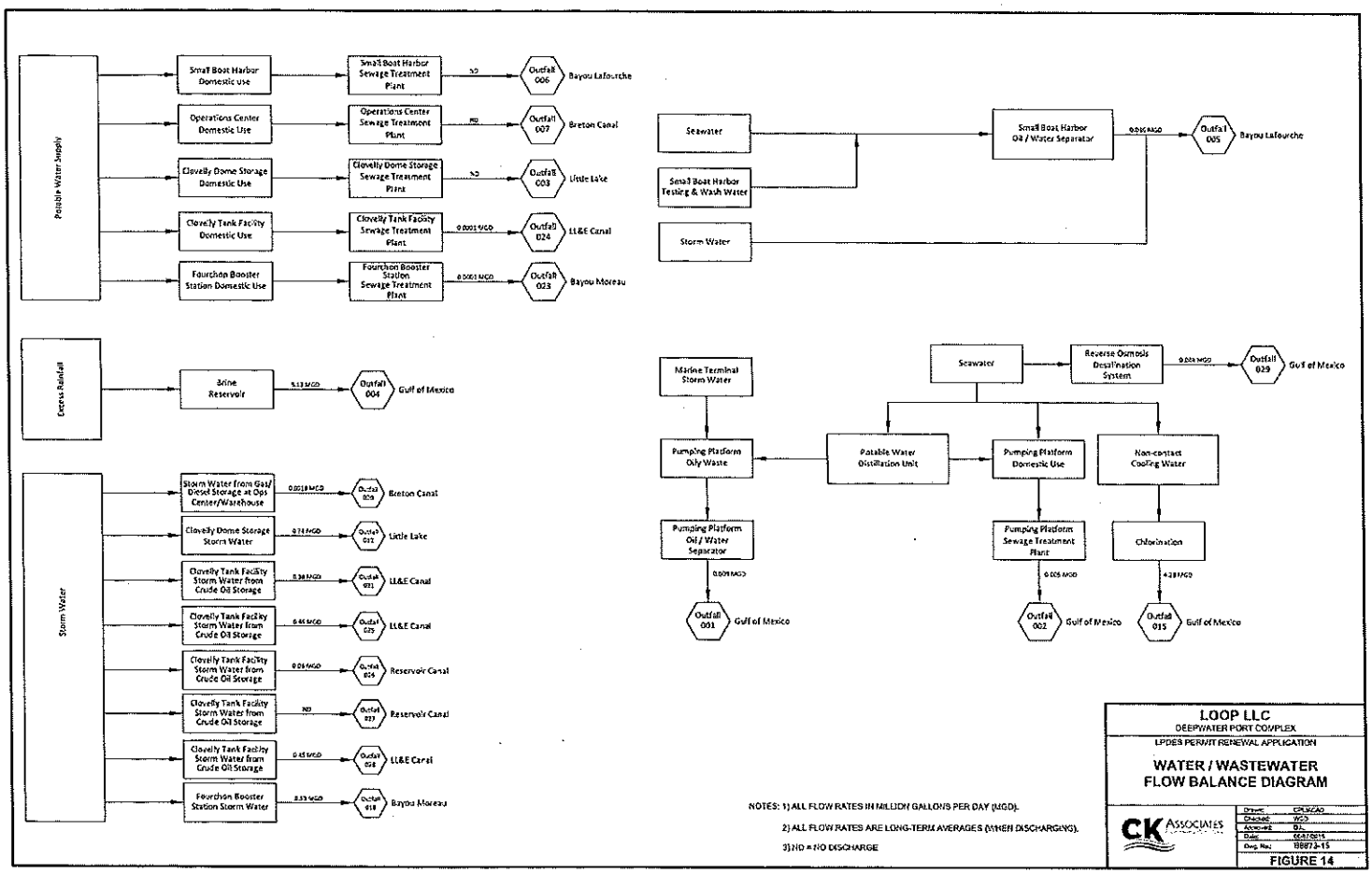

NOTES: 1) ALL FLOW RATES IN MILLION GALLONS PER DAY (MGD).

2) ALL FLOW RATES ARE LONG-TERM AVERAGES (WHEN DISCHARGING).

3) ND = NO DISCHARGE

LOOP LLC
DEEPWATER PORT COMPLEX

LPDES PERMIT RENEWAL APPLICATION

WATER / WASTEWATER FLOW BALANCE DIAGRAM

CK ASSOCIATES

Drawn:	CPL/SCAO
Checked:	WCD
Approved:	DJL
Date:	06/07/2015
Dwg. No.:	188873-15

FIGURE 14