Delaware City Refining Company LLC
4550 Wrangle Hill Road
Delaware City, DE 19706
Office: 302.834.6000
Fax: 302.834.6095
www.pbfenergy.com

Delaware City
Refining Company

July 21, 2014

CMRRR# 7013 2630 0001 5934 3234

State of Delaware – DNREC
Division of Air Quality
Blue Hen Corporate Center
655 South Bay Road, Suite 5N
Dover, DE 19901
Attn: Division Director

SUBJECT: Delaware City Refining Company LLC
Regulation 1102 Permit Application Package for the FCU and FCCU

Dear Division Director:

As the Department is aware, a prior owner of the Delaware City Refinery (the "Refinery") executed a consent decree with the Department, the United States Environmental Protection Agency ("EPA") and other parties, captioned *United States of America v. Motiva Enterprises LLC,* and docketed by the Federal District Court for the Southern District of Texas at Civil Action H-01-0978 (the "Consent Decree"). Delaware City Refining Company LLC ("DCRC") subsequently accepted assignment for implementation of certain remaining obligations under the Consent Decree.

Pursuant to relevant terms of the Consent Decree, the Refinery had previously submitted to the Department and EPA evaluations of emissions of oxides of nitrogen ("NOx") from the fluid coking unit ("FCU") and fluid catalytic cracking unit ("FCCU") at the Refinery. In response to those prior submittals, by letters dated May 21, 2014, EPA specified final NOx emission limits for the FCU and FCCU for purposes of the Consent Decree.

Pursuant to the terms of the Consent Decree, as discussed by representatives of the Department, EPA and DCRC, DCRC hereby applies to incorporate into the Title V air quality operating permit for the Refinery (the "Title V Permit") the final NOx emission limits for the FCU and FCCU

On July 11, 2014, DCRC submitted to the Department a request to incorporate the NOx limits as an "Administrative Permit Amendment" to the Title V Permit. However, the Department directed DCRC to instead submit this application as a request for a Regulation 1102 permit. DCRC therefore has submitted this application at the Department's request to incorporate the NOx emission limits for the FCC and FCU into a Regulation 1102 permit. DCRC further requests the terms and conditions contained in the operating permit be transferred to the Title V Permit AQM-003/00016 via the administrative amendment process pursuant to 7 DE Admin. Code 1102, Section 11.2.10 and 7 DE Admin. Code 1130, Section 7.4.1.5.

In responding to DCRC's application for administrative amendment, the Department stated that it regarded as a deficiency in the application DCRC's request for inclusion in the permit of specific language defining the duration of the NOx emission limits. DCRC does not agree that a request through an application to include specific language in a permit can constitute a deficiency in the

application. In addition, DCRC herein restates the request that such language (included within Attachment A – Suggested Permit Terms) be included in the air permit issued for the FCC and FCU to accurately reflect the intended effect of the Consent Decree and maintain consistency with the plantwide applicability limit previously established by the Department for the Refinery.

Enclosed are three copies of an air permit application package for both the FCU and the FCCU units to incorporate the NOx limits referenced above.

Should you require any additional information, please contact me at 302-836-6750 or at Larry.Boyd@pbfenergy.com.

Sincerely,

Larry Boyd
Environmental Engineer

cc: **CMRRR: 7013 2630 0001 5934 3241**
Section Chief
United States Environmental Protection Agency
Associate Director of Enforcement (3AP12)
1650 Arch Street
Philadelphia, PA 19103

CMRRR: 7013 2630 0001 5934 3258
Paul Foster
DNREC
715 Grantham Lane
New Castle, DE 19720

Attachment A – Suggested Permit Terms

Permit: APC-81/0829-OPERATION (Amendment 8)(PSD-NSR)
Fluid Coker Unit, FCU Carbon Monoxide Boiler, Wet Gas Scrubber, and Selective Non-Catalytic Reduction System

Section 2. Emission Limitations

2.1.2. Nitrogen Oxide (NOx) Emissions

2.1.2.1. NOx emissions shall not exceed 152 ppmvd @ 0% oxygen on a 30-day rolling average basis.

2.1.2.2. NO_X emissions from the FCU WGS shall not exceed 152.0 ppmvd @ 0 % oxygen on a 7-day rolling average basis. This provision 2.1.2.2. shall no longer apply following termination of the consent decree in *Civil Action Number H-01-0978.*

2.1.2.3. NO_X emissions from the FCU WGS shall not exceed 115.2 ppmvd @ 0 % oxygen on a 365-day rolling average basis. This provision 2.1.2.3. shall no longer apply following termination of the consent decree in *Civil Action Number H-01-0978.*

Permit: APC-82/0981-OPERATION (Amendment 9)(NSPS)
Fluid Catalytic Cracking Unit (FCCU), FCCU Carbon Monoxide Boiler, and Wet Gas Scrubber System

Section 2. Emission Limitations

2.1.2. Nitrogen Oxide (NOx) Emissions

2.1.2.1. NOx emissions shall not exceed those prescribed in Condition 3, Table 1e.4.i of **Permit: AQM-003/00016 – Part 2 (Revision 5)** dated April 5, 2011.

2.1.2.2. NO_X emissions from the FCCU WGS shall not exceed 137.0 ppmvd @ 0 % oxygen on a 7-day rolling average basis. This provision 2.1.2.2. shall no longer apply following termination of the consent decree in *Civil Action Number H-01-0978.*

2.1.2.3. NO_X emissions from the FCU WGS shall not exceed 100.7 ppmvd @ 0 % oxygen on a 365-day rolling average basis. This provision 2.1.2.3. shall no longer apply following termination of the consent decree in *Civil Action Number H-01-0978.*

Attachment B

Permit Application: APC-81/0829-OPERATION (Amendment 8)(PSD-NSR) Fluid Coker Unit, FCU Carbon Monoxide Boiler, Wet Gas Scrubber, and Selective Non-Catalytic Reduction System

DNREC – Air Quality Management Section
Application to Construct, Operate, or Modify Stationary Sources

Administrative Information

If you are using this form electronically, press F1 at any time for help
All Application Forms Should Be Mailed To:
Air Quality Management
Blue Hen Corporate Center
655 S. Bay Road, Suite 5 N
Dover, DE 19901

All Checks Should Be Made Payable To:
State of Delaware

For Department Use Only

Date Received Stamp | Assigned Permit Number

Company and Site Information

1.	Company Name: **Delaware City Refining Company, LLC**
2.	Company Mailing Address: **4550 Wrangle Hill Road** City: **Delaware City** State: **Delaware** Zip Code: **19706**
3.	Site Name: **Same as above**
4.	Site Mailing Address: **Same as above** *(if different from above)* City: State: Zip Code:
5.	Physical Location of Site: **Same as above** *(if different from above)* City: State: Zip Code:
6.	Air Quality Management Facility ID Number: **1000300016**
7.	Site NAICS Code): **324110** *(list all that apply*
8.	Site SIC Code: : **2911** *(list all that apply)*
9.	Site Location Coordinates: **Lat/Long: 39.5778/-75.5892**
10.	Is the Facility New or Existing? ☐ NEW ☒ EXISTING
If the Facility is an Existing Facility, Complete the Rest of Question 10. If Not, Proceed to Question 11.	
10.1.	Does the Facility Have Active Air Permits? ☒ YES ☐ NO

Company and Site Information

11. Is this Application For a New Source or Modification of an Existing Source?
☐ New Source
☒ Modification of Existing Source
☐ Other (Specify):

If the application is for the modification of an existing source, complete the rest of Question 11. If not, proceed to Question 12.

11.1. Does the Source Have an Active Air Permit? ☒ YES ☐ NO

If the source has an active air permit, complete the rest of Question 11. If not, proceed to Question 12.

11.2. Permit Number of Existing Source: **AQM-003/00016**

12. Status of Source Being Applied For: ☐ Natural Minor Source ☐ Synthetic Minor Source ☒ Major Source

13. Facility Status: ☐ Natural Minor Facility ☐ Synthetic Minor Facility ☒ Major Facility

If the source is a Major Source, complete the rest of Question 13. If not, proceed to Question 14.

13.1. Responsible Official Name: **Jose Dominguez**

13.2. Responsible Official Title: **Refinery Manager**

Contact Information

14. Name of Owner or Facility Manager: **Jose Dominguez**

15. Title of Owner or Facility Manager: **Refinery Manager**

16. Permit Contact Name: **Thomas Godlewski**

17. Permit Contact Title: **Environmental Manager**

18. Permit Contact Telephone Number: **302-834-6053**

19. Permit Contact Fax Number:

20. Permit Contact E-Mail Address: **Thomas.Godlewski@pbfenergy.com**

Proposed Operating Schedule

21. Proposed Operating Schedule: **24** hours/day **7** days/week **52** weeks/year

21.1. Is There Any Additional Information Regarding the Operating Schedule? ☐ YES ☒ NO

If YES, complete the rest of Question 21. If NO, proceed to Question 22.

21.2. Describe the Additional Information:

Coastal Zone Information

22. Is the Facility Located in the Coastal Zone? ☒ YES ☐ NO

If the facility is located in the Coastal Zone complete the rest of Question 22. If not, proceed to Question 23.

22.1. Is a Coastal Zone Permit Required for Construction or Operation of the Source Being Applied for? ☐ YES ☒ NO

Attach a copy of the Coastal Zone Determination if it has not been previously submitted

If a Coastal Zone Permit is required complete the rest of Question 22. If not, proceed to Question 23.

22.2. Has a Coastal Zone Permit Been Issued? ☐ YES ☐ NO

Attach a copy of the Coastal Zone Permit if it has not been previously submitted

Local Zoning Information

23. Parcel Zoning: **HI - Heavy Industrial**

Attach Proof of Local Zoning if it has not been previously submitted

Application Information

24. Is the Appropriate Application Fee Attached? ☒ YES ☐ NO

25. Is the Advertising Fee Attached? ☒ YES ☐ NO

Attach the appropriate fees. Note that your Application will not be considered complete if the appropriate fees are not included.

26. Is a Cover Letter Describing the Process Attached? ☒ YES ☐ NO

Attach a brief cover letter describing your Application.

If the Facility is a New Facility complete Question 27. If not, proceed to Question 28.

27. Is a Copy of the Applicant Background Information Questionnaire on Record at the Department? ☒ YES ☐ NO

If NO, complete the rest of Question 27. If YES, process to Question 28.

27.1 Is a Copy of the Applicant Background Information Questionnaire Attached? ☐ YES ☐ NO

Attach a copy of the Applicant Background Information Questionnaire if applicable.

28. Check Which Application Forms are Attached:

☒ AQM-1	☐ AQM-3.4	☐ AQM-3.9	☐ AQM-3.14	☐ AQM-4.4	☐ AQM-4.9	☐ AQM-6
☒ AQM-2	☐ AQM-3.5	☐ AQM-3.10	☐ AQM-3.15	☐ AQM-4.5	☐ AQM-4.10	
☒ AQM-3.1	☐ AQM-3.6	☐ AQM-3.11	☐ AQM-4.1	☐ AQM-4.6	☐ AQM-4.11	
☐ AQM-3.2	☐ AQM-3.7	☐ AQM-3.12	☐ AQM-4.2	☐ AQM-4.7	☐ AQM-4.12	
☐ AQM-3.3	☐ AQM-3.8	☐ AQM-3.13	☐ AQM-4.3	☐ AQM-4.8	☒ AQM-5	

Application Information

29. Check Which Documents are Attached:

- ☐ Coastal Zone Determination
- ☐ Coastal Zone Permit
- ☐ Proof of Local Zoning
- ☒ Application Fee
- ☒ Advertising Fee
- ☐ Applicant Background Information Questionnaire
- ☐ Claim of Confidentiality
- ☐ Manufacturer Specification(s)
- ☐ Material Safety Data Sheets (MSDSs)
- ☐ Supporting Calculations
- ☒ Descriptive Cover Letter
- ☐ Other (Specify):

Confidentiality Information

30. Do You Consider Any of the Information Submitted With this Application Confidential? ☐ YES ☒ NO

If a Claim of Confidentiality is made it MUST meet the requirements of Section 6 of DNREC's Freedom of Information ("FOIA") Regulation at the time the Application is submitted.

Signature Block

I, the undersigned, hereby certify under penalty of law that I have personally examined and am familiar with the information submitted in this document and all of its attachments as to the truth, accuracy, and completeness of this information. I certify based on information and belief formed after reasonable inquiry, the statements and information in this document are true, accurate, and complete. By signing this form, I certify that I have not changed, altered, or deleted any portions of this application. I acknowledge that I cannot commence construction, alteration, modification or initiate operation until I receive written approval (i.e. permit, registration, or exemption letter) from the Department. I acknowledge that I may be required to perform testing of the equipment to receive construction or operation approval, and that if I do not receive approval to construct or operate that I may appeal the decision.

Jose Dominguez
Owner or Authorized Agent

7-21-14
Date

FOR
Signature of Owner or Authorized Agent

All Application Forms Should Be Mailed To:
Air Quality Management
Blue Hen Corporate Center
655 S. Bay Road, Suite 5 N
Dover, Delaware 19901

All Checks Should Be Made Payable To:
State of Delaware

Process Flow Diagram

Sketch the Process Flow Diagram for the equipment or process being applied for. Include each emission unit and control device (even existing emission units that will not be modified by this application). You may identify each emission unit with a simple shape. Label each emission unit and control device with a unique identifier. Show the relationship between each emission unit and/or control device by drawing arrows between them to indicate the flow of air pollutants. List which application forms are included for each emission unit or control device below the shape representing each emission unit or control device . See http://www.delaware.gov/reg2/default.htm for example Process Flow Diagrams for common processes. If you already have a Process Flow Diagram for the equipment or process being applied for, you may attach it to the application instead of using this form.

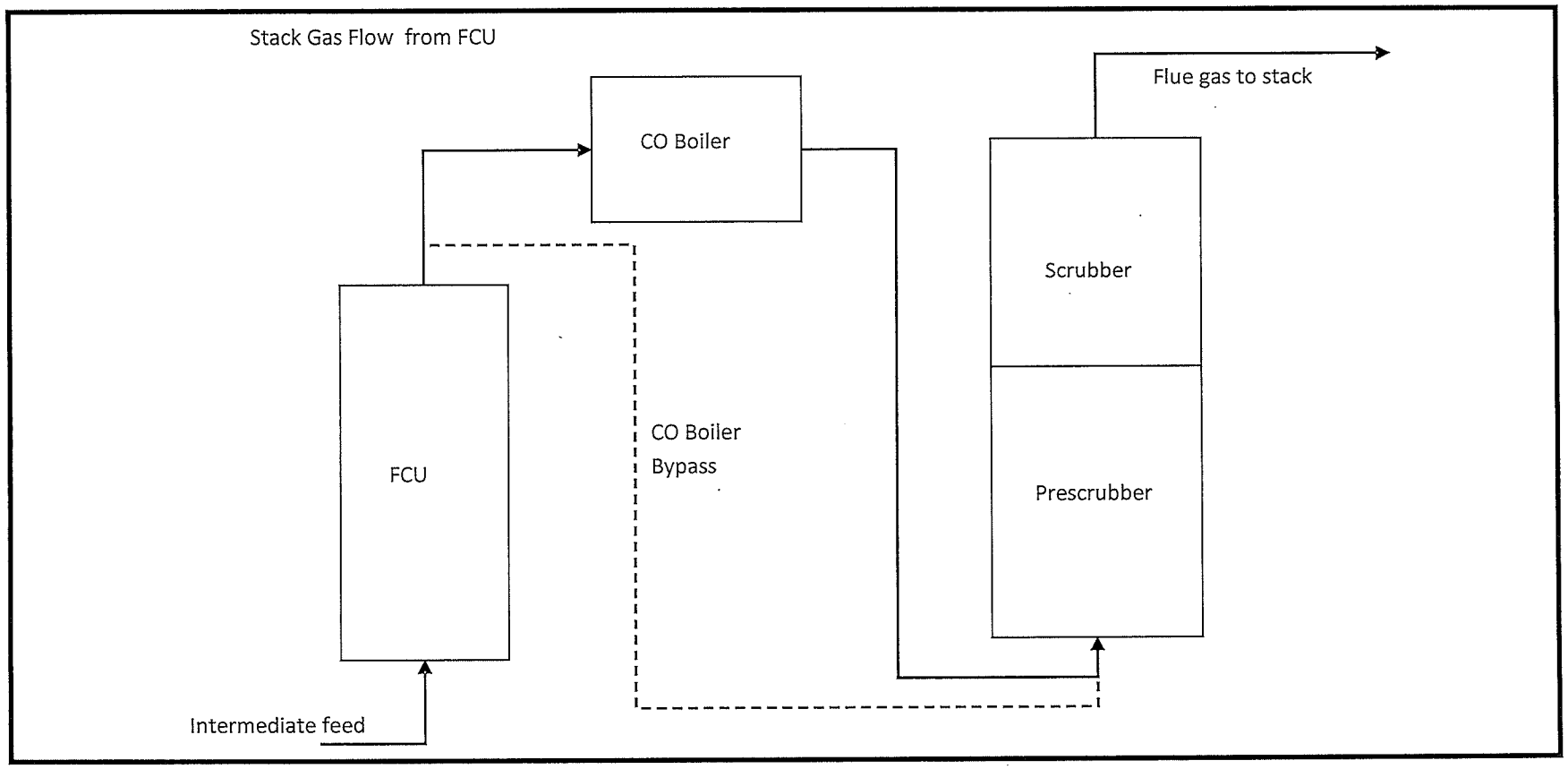

Generic Process Equipment Application

If you are using this form electronically, press F1 at any time for help

General Information

1.	Facility Name: **Delaware City Refining Company, LLC**
2.	Equipment ID Number: **Unit #22 (FCU, CO Boiler, WGS)**
3.	Provide a brief description of Equipment or Process: **Fluid Coking Unit (FCU) for conversion of refinery intermediates. FCU also includes CO Boiler and Wet Gas Scrubber (Belco WGS with Cansolv absorber).**
4.	Manufacturer: **Not applicable**
5.	Model: **Not applicable**
6.	Serial Number: **Not applicable**

Raw Material Information

7. Raw Materials Used in Process

If there are more than four Raw Materials used, attach additional copies of this page as needed.

	Raw Material Used	CAS Number	Usage Rate (include units)	MSDS Attached?
7.1.	**Refinery Intermediates**	**Not applicable**	**~100,098 gal/hr**	☐ YES ☒ NO
7.2.				☐ YES ☐ NO
7.3.				☐ YES ☐ NO
7.4.				☐ YES ☐ NO

Attach a copy of all calculations made to support the data in the table above.
Attach a Material Safety Data Sheet (MSDS) for each Raw Material used.

Products Produced Information

8. Products Produced

If there are more than four Products Produced, attach additional copies of this page as needed.

	Product Produced	CAS Number	Production Rate (include units)	MSDS Attached?
8.1.	**Refinery Intermediates**	**Not applicable**	**~100,098 gal/hr**	☐ YES ☒ NO
8.2.				☐ YES ☐ NO
8.3.				☐ YES ☐ NO
8.4.				☐ YES ☐ NO

Attach a copy of all calculations made to support the data in the table above.
Attach a Material Safety Data Sheet (MSDS) for each Product Produced.

Byproducts Generated Information

9. Byproducts Generated

If there are more than four Byproducts Generated, attach additional copies of this page as needed.

	Byproduct Generated	CAS Number	Generation Rate (include units)	MSDS Attached?
9.1.				☐ YES ☐ NO
9.2.				☐ YES ☐ NO
9.3.				☐ YES ☐ NO
9.4.				☐ YES ☐ NO

Attach a copy of all calculations made to support the data in the table above.
Attach a Material Safety Data Sheet (MSDS) for each Byproduct Generated.

General Information

10. Manufacturer's Rated Capacity or Maximum Throughput of Equipment or Process: **The design inlet capacity of the FCU is approximately 57,199 barrels per day.**

11. Describe Important Manufacturer Specifications and/or Operating Parameters for Equipment or Process: **NA**

Attach the Manufacturer's Specification Sheet(s) for the equipment or process.

Control Device Information

12. Is an Air Pollution Control Device Used? ☒ YES ☐ NO

If an Air Pollution Control Device is used, complete the rest of Question 12. If not, proceed to Question 13.

12.1. Is Knockout Used? ☐ YES ☒ NO

If YES, complete Form AQM-4.11 and attach it to this application.

12.2. Is a Settling Chamber Used? ☐ YES ☒ NO

If YES, complete Form AQM-4.10 and attach it to this application.

12.3. Is an Inertial or Cyclone Collector Used? ☐ YES ☒ NO

If YES, complete Form AQM-4.5 and attach it to this application.

12.4. Is a Fabric Collector or Baghouse Used? ☐ YES ☒ NO

If YES, complete Form AQM-4.6 and attach it to this application.

12.5. Is a Venturi Scrubber Used? ☐ YES ☒ NO

If YES, complete Form AQM-4.8 and attach it to this application.

12.6. Is an Electrostatic Precipitator Used? ☐ YES ☒ NO

If YES, complete Form AQM-4.7 and attach it to this application.

Control Device Information

12.7. Is Adsorption Equipment Used? ☐ YES ☒ NO

If YES, complete Form AQM-4.2 and attach it to this application.

12.8. Is a Scrubber Used? ☐ YES ☒ NO

If YES, complete Form AQM-4.4 and attach it to this application.

12.9. Is an Incinerator, Afterburner or Oxidizer Used? ☐ YES ☒ NO

If YES, complete Form AQM-4.1 and attach it to this application.

12.10. Is a Flare Used? ☐ YES ☒ NO

If YES, complete Form AQM-4.3 and attach it to this application.

12.11. Is Any Other Control Device Used? ☐ YES ☒ NO

If YES, attach a copy of the control device Manufacturer's Specification Sheet(s).

If any other control device is used, complete the rest of Question 12. If not, proceed to Question 13.

12.12. Describe Control Device: **Wet Gas Scrubber with Belco WGS and Cansolv absorber.**

12.13. Pollutants Controlled: ☐ VOCs ☐ HAPs ☐ PM ☐ PM_{10} ☐ $PM_{2.5}$ ☐ NO_X ☒ SO_X ☐ Metals
☐ Other (Specify):

12.14. Control Device Manufacturer:

12.15. Control Device Model:

12.16. Control Device Serial Number:

12.17. Control Device Design Capacity:

12.18. Control Device Removal or Destruction Efficiency: **98%**

Stack Information

13. How Does the Process Equipment Vent:
(check all that apply)
☐ Directly to the Atmosphere
☐ Through a Control Device Covered by Forms AQM-4.1 through 4.12
☒ Through Another Control Device Described on This Form

If any of the process equipment vents directly to the atmosphere or through another control device described on this form, proceed to Question 14. If the process equipment vents through a control device, provide the stack parameters on the control device form and proceed to Question 18.

14. Number of Air Contaminant Emission Points: **1**

If there are more than three Emission Points, attach additional copies of this page as needed.

For the first Emission Point

15. Emission Point Name: **FCU WGS Stack**

15.1. Stack Height Above Grade: **175 feet**

15.2. Stack Exit Diameter: **8.5 feet**
(Provide Stack Dimensions If Rectangular Stack)

15.3. Is a Stack Cap Present? ☐ YES ☒ NO

15.4. Stack Configuration: ☒ Vertical ☐ Horizontal ☐ Downward-Venting

Stack Information

(check all that apply)	☐ Other (Specify):
15.5.	Stack Exit Gas Temperature: **140 °F**
15.6.	Stack Exit Gas Flow Rate: **272,900 ACFM**
15.7.	Distance to Nearest Property Line: **1942 feet**
15.8.	Describe Nearest Obstruction: **Process Unit**
15.9.	Height of Nearest Obstruction: **175 feet**
15.10.	Distance to Nearest Obstruction: **259 feet**
15.11.	Are Stack Sampling Ports Provided? ☒ YES ☐ NO
For the second Emission Point. If there is no second Emission Point, proceed to Question 18.	
16.	Emission Point Name:
16.1.	Stack Height Above Grade: **feet**
16.2.	Stack Exit Diameter: **feet** *(Provide Stack Dimensions If Rectangular Stack)*
16.3.	Is a Stack Cap Present? ☐ YES ☐ NO
16.4.	Stack Configuration: ☐ Vertical ☐ Horizontal ☐ Downward-Venting *(check all that apply)* ☐ Other (Specify):
16.5.	Stack Exit Gas Temperature: **°F**
16.6.	Stack Exit Gas Flow Rate: **ACFM**
16.7.	Distance to Nearest Property Line: **feet**
16.8.	Describe Nearest Obstruction:
16.9.	Height of Nearest Obstruction: **feet**
16.10.	Distance to Nearest Obstruction: **feet**
16.11.	Are Stack Sampling Ports Provided? ☐ YES ☐ NO
For the third Emission Point. If there is no third Emission Point, proceed to Question 18.	
17.	Emission Point Name:
17.1.	Stack Height Above Grade: **feet**
17.2.	Stack Exit Diameter: **feet** *(Provide Stack Dimensions If Rectangular Stack)*
17.3.	Is a Stack Cap Present? ☐ YES ☐ NO
17.4.	Stack Configuration: ☐ Vertical ☐ Horizontal ☐ Downward-Venting *(check all that apply)* ☐ Other (Specify):
17.5.	Stack Exit Gas Temperature: **°F**
17.6.	Stack Exit Gas Flow Rate: **ACFM**
17.7.	Distance to Nearest Property Line: **feet**
17.8.	Describe Nearest Obstruction:
17.9.	Height of Nearest Obstruction: **feet**

Stack Information

17.10. Distance to Nearest Obstruction: **feet**

17.11. Are Stack Sampling Ports Provided? ☐ YES ☐ NO

Monitoring Information

18. Will Emissions Data be Recorded by a Continuous Emission Monitoring System? ☒ YES ☐ NO

If Yes, attach a copy of the Continuous Emission Monitoring System Manufacturer's Specification Sheets

If YES, complete the rest of Question 18. If NO, proceed to Question 19.

18.1. Pollutants Monitored: ☐ VOCs ☐ HAPs ☐ PM ☐ PM_{10} ☐ $PM_{2.5}$ ☒ NO_X ☒ SO_X ☐ Metals ☒ Other (Specify): **CO, O2, volumetric flow**

18.2. Describe the Continuous Emission Monitoring System: **CEMS system currently installed, no changes.**

18.3. Manufacturer:

18.4. Model:

18.5. Serial Number:

18.6. Will Multiple Emission Units Be Monitored at the Same Point? ☐ YES ☒ NO

If YES, complete the rest of Question 18. If NO, proceed to Question 19.

18.7. Emission Units Monitored:

18.8. Will More Than One Emission Unit be Emitting From the Combined Point At Any Time? ☐ YES ☐ NO

If YES, complete the rest of Question 18. If NO, proceed to Question 19.

18.9. Emission Units Emitting Simultaneously:

Monitoring and Alarm Information

19. Are There Any Alarms You Would Like the Department to Consider When Drafting the Permit? ☐ YES ☒ NO

If YES, complete the rest of Question 19. If NO, proceed to Question 20.

19.1. Describe the System Alarm(s):

If there are more than five alarms, attach additional copies of this page as needed.

	Operating Parameter Monitored	Describe Alarm Trigger	Monitoring Device or Alarm Type	Does the Alarm Initiate an Automated Response?
19.1.1.			☐ Visual ☐ Auditory ☐ Automatic (Remote Monitoring) ☐ Other	☐ NO ☐ YES Describe:
19.1.2.			☐ Visual	☐ NO ☐ YES

Monitoring and Alarm Information

			☐ Auditory ☐ Automatic (Remote Monitoring) ☐ Other	Describe:
19.1.3.			☐ Visual ☐ Auditory ☐ Automatic (Remote Monitoring) ☐ Other	☐ NO ☐ YES Describe:
19.1.4.			☐ Visual ☐ Auditory ☐ Automatic (Remote Monitoring) ☐ Other	☐ NO ☐ YES Describe:
19.1.5.			☐ Visual ☐ Auditory ☐ Automatic (Remote Monitoring) ☐ Other	☐ NO ☐ YES Describe:

Emissions Information

20. Do You Plan to Take Any Emission Limitations to Avoid Major Source Status, Minor New Source Review, MACT, NSPS, etc.? ☐ YES ☒ NO

If YES, complete the rest of Question 20. If NO, proceed to Question 21.

20.1. Describe Any Proposed Emission Limitations:

Operating Information

21. Do You Plan to Take Any Operating Limitations to Avoid Major Source Status, Minor New Source Review, MACT, NSPS, etc.? ☐ YES ☒ NO

If YES, complete the rest of Question 21. If NO, proceed to Question 22.

21.1. Describe Any Proposed Operating Limitations:

Additional Information

22. Is There Any Additional Information Pertinent to this Application? ☒ YES ☐ NO

If YES, complete the rest of Question 22.

Additional Information
22.1. Describe: **See attached.**

Emissions Information Application

If you are using this form electronically, press F1 at any time for help

Process Information

1. Number of Individual Pieces of Process Equipment in Process: **1 emission point/stack for FCU**
2. Number of Individual Control Devices in Process: **FCU has CO Boiler and Belco WGS system w/ Cansolv Absorber. There are no emissions changes to criteria pollutants, except the incorporation of NOx limits, associated with this submittal.**

Emissions Information for First Emission Point/Stack

3. Emission Point Name: **FCU WGS Stack**
4. Equipment ID Number for all Process Equipment and Control Devices Venting Through Emission Point/Stack: **Unit 22**
5. Pollutant Emissions

If more than 18 pollutants are emitted at this Emission Point/Stack, attach additional copies of this page as needed.

	Pollutant Name (Specify VOCs and HAPs Individually in 5.10 through 5.18)	CAS Number (Not required for 5.1 through 5.9)	Maximum Uncontrolled Emission Rate at Design Capacity	Maximum Controlled Emission Rate at Design Capacity	Annual Potential to Emit (PTE)	Expected Annual Emissions
5.1.	Particulate Matter (PM)		**N/A lbs/hour**	**N/A lbs/hour**	**N/A** tons/year	**N/A** tons/year
5.2.	PM_{10}		**N/A lbs/hour**	**N/A lbs/hour**	**N/A** tons/year	**N/A** tons/year
5.3.	$PM_{2.5}$		**N/A lbs/hour**	**N/A lbs/hour**	**N/A** tons/year	**N/A** tons/year
5.4.	Sulfur Oxides (SO_X)		**N/A lbs/hour**	**N/A lbs/hour**	**N/A** tons/year	**N/A** tons/year
5.5.	Nitrogen Oxides (NO_X)		**152.0 ppmvd @ 0% O2 on a 7-day rolling average; 115.2 ppmvd @ 0% O2 on a 365-day rolling average lbs/hour**	**152.0 ppmvd @ 0% O2 on a 7-day rolling average; 115.2 ppmvd @ 0% O2 on a 365-day rolling average lbs/hour**	**N/A** tons/year	**N/A** tons/year
5.6.	Carbon Monoxide (CO)		**N/A lbs/hour**	**N/A lbs/hour**	**N/A** tons/year	**N/A** tons/year

Emissions Information for First Emission Point/Stack

5.7.	Lead		**N/A lbs/day**	**N/A lbs/day**	**N/A** tons/year	**N/A** tons/year
5.8.	Total Volatile Organic Compounds (VOCs)		**N/A lbs/hour**	**N/A lbs/hour**	**N/A** tons/year	**N/A** tons/year
5.9.	Total Hazardous Air Pollutants (HAPs)		**lbs/hour**	**lbs/hour**	tons/year	tons/year
5.10.			**lbs/hour**	**lbs/hour**	tons/year	tons/year
5.11.			**lbs/hour**	**lbs/hour**	tons/year	tons/year
5.12.			**lbs/hour**	**lbs/hour**	tons/year	tons/year
5.13.			**lbs/hour**	**lbs/hour**	tons/year	tons/year
5.14.			**lbs/hour**	**lbs/hour**	tons/year	tons/year
5.15.			**lbs/hour**	**lbs/hour**	tons/year	tons/year
5.16.			**lbs/hour**	**lbs/hour**	tons/year	tons/year
5.17			**lbs/hour**	**lbs/hour**	tons/year	tons/year
5.18.			**lbs/hour**	**lbs/hour**	tons/year	tons/year

6. Provide Any Additional Information Necessary to Understanding the Emission Rates Provided Above: **See attached report.**

Attach the Basis of Determination or Calculations for each Emission Rate provided above.

Emissions Information for Second Emission Point/Stack

7. Emission Point Name: **Not applicable**

8. Equipment ID Number for all Process Equipment and Control Devices Venting Through Emission Point/Stack:

9. Pollutant Emissions

If more than 18 pollutants are emitted at this Emission Point/Stack, attach additional copies of this page as needed.

Emissions Information for Second Emission Point/Stack

	Pollutant Name (Specify VOCs and HAPs Individually in 9.10 through 9.18)	CAS Number (Not required for 9.1 through 9.9)	Maximum Uncontrolled Emission Rate at Design Capacity	Maximum Controlled Emission Rate at Design Capacity	Annual Potential to Emit (PTE)	Expected Annual Emissions
9.1.	Particulate Matter (PM)		**lbs/hour**	**lbs/hour**	tons/year	tons/year
9.2.	PM_{10}		**lbs/hour**	**lbs/hour**	tons/year	tons/year
9.3.	$PM_{2.5}$		**lbs/hour**	**lbs/hour**	tons/year	tons/year
9.4.	Sulfur Oxides (SO_X)		**lbs/hour**	**lbs/hour**	tons/year	tons/year
9.5.	Nitrogen Oxides (NO_X)		**lbs/hour**	**lbs/hour**	tons/year	tons/year
9.6.	Carbon Monoxide (CO)		**lbs/hour**	**lbs/hour**	tons/year	tons/year
9.7.	Lead		**lbs/hour**	**lbs/hour**	tons/year	tons/year
9.8.	Total Volatile Organic Compounds (VOCs)		**lbs/hour**	**lbs/hour**	tons/year	tons/year
9.9.	Total Hazardous Air Pollutants (HAPs)		**lbs/hour**	**lbs/hour**	tons/year	tons/year
9.10.			**lbs/hour**	**lbs/hour**	tons/year	tons/year
9.11.			**lbs/hour**	**lbs/hour**	tons/year	tons/year
9.12.			**lbs/hour**	**lbs/hour**	tons/year	tons/year
9.13.			**lbs/hour**	**lbs/hour**	tons/year	tons/year
9.14.			**lbs/hour**	**lbs/hour**	tons/year	tons/year
9.15.			**lbs/hour**	**lbs/hour**	tons/year	tons/year
9.16.			**lbs/hour**	**lbs/hour**	tons/year	tons/year
9.17			**lbs/hour**	**lbs/hour**	tons/year	tons/year
9.18.			**lbs/hour**	**lbs/hour**	tons/year	tons/year

Emissions Information for Second Emission Point/Stack

10. Provide Any Additional Information Necessary to Understanding the Emission Rates Provided Above:

Attach the Basis of Determination or Calculations for each Emission Rate provided above.

Emissions Information for Third Emission Point/Stack

11. Emission Point Name: **Not applicable**

12. Equipment ID Number for all Process Equipment and Control Devices Venting Through Emission Point/Stack:

13. Pollutant Emissions

If more than 18 pollutants are emitted at this Emission Point/Stack, attach additional copies of this page as needed.

	Pollutant Name (Specify VOCs and HAPs Individually in 13.10 through 13.18)	CAS Number (Not required for 13.1 through 13.9)	Maximum Uncontrolled Emission Rate at Design Capacity	Maximum Controlled Emission Rate at Design Capacity	Annual Potential to Emit (PTE)	Expected Annual Emissions
13.1.	Particulate Matter (PM)		**lbs/hour**	**lbs/hour**	tons/year	tons/year
13.2.	PM_{10}		**lbs/hour**	**lbs/hour**	tons/year	tons/year
13.3.	$PM_{2.5}$		**lbs/hour**	**lbs/hour**	tons/year	tons/year
13.4.	Sulfur Oxides (SO_X)		**lbs/hour**	**lbs/hour**	tons/year	tons/year
13.5.	Nitrogen Oxides (NO_X)		**lbs/hour**	**lbs/hour**	tons/year	tons/year
13.6.	Carbon Monoxide (CO)		**lbs/hour**	**lbs/hour**	tons/year	tons/year
13.7.	Lead		**lbs/hour**	**lbs/hour**	tons/year	tons/year
13.8.	Total Volatile Organic Compounds (VOCs)		**lbs/hour**	**lbs/hour**	tons/year	tons/year
13.9.	Total Hazardous Air Pollutants (HAPs)		**lbs/hour**	**lbs/hour**	tons/year	tons/year
13.10.			**lbs/hour**	**lbs/hour**	tons/year	tons/year

Emissions Information for Third Emission Point/Stack

13.11.		lbs/hour	lbs/hour	tons/year	tons/year
13.12.		lbs/hour	lbs/hour	tons/year	tons/year
13.13.		lbs/hour	lbs/hour	tons/year	tons/year
13.14.		lbs/hour	lbs/hour	tons/year	tons/year
13.15.		lbs/hour	lbs/hour	tons/year	tons/year
13.16.		lbs/hour	lbs/hour	tons/year	tons/year
13.17		lbs/hour	lbs/hour	tons/year	tons/year
13.18.		lbs/hour	lbs/hour	tons/year	tons/year

14. Provide Any Additional Information Necessary to Understanding the Emission Rates Provided Above:

Attach the Basis of Determination or Calculations for each Emission Rate provided above.

Emissions Information for Fourth Emission Point/Stack

15. Emission Point Name: **Not applicable**

16. Equipment ID Number for all Process Equipment and Control Devices Venting Through Emission Point/Stack:

17. Pollutant Emissions

If more than 18 pollutants are emitted at this Emission Point/Stack, attach additional copies of this page as needed.

Pollutant Name (Specify VOCs and HAPs individually in 17.10 through 17.18)	CAS Number (Not required for 17.1 through 17.9)	Maximum Uncontrolled Emission Rate at Design Capacity	Maximum Controlled Emission Rate at Design Capacity	Annual Potential to Emit (PTE)	Expected Annual Emissions
17.1. Particulate Matter (PM)		lbs/hour	lbs/hour	tons/year	tons/year
17.2. PM_{10}		lbs/hour	lbs/hour	tons/year	tons/year

Emissions Information for Fourth Emission Point/Stack

17.3.	$PM_{2.5}$		**lbs/hour**	**lbs/hour**	tons/year	tons/year
17.4.	Sulfur Oxides (SO_X)		**lbs/hour**	**lbs/hour**	tons/year	tons/year
17.5.	Nitrogen Oxides (NO_X)		**lbs/hour**	**lbs/hour**	tons/year	tons/year
17.6.	Carbon Monoxide (CO)		**lbs/hour**	**lbs/hour**	tons/year	tons/year
17.7.	Volatile Organic Compounds (VOCs)		**lbs/hour**	**lbs/hour**	tons/year	tons/year
17.8.	Lead		**lbs/hour**	**lbs/hour**	tons/year	tons/year
17.9.			**lbs/hour**	**lbs/hour**	tons/year	tons/year
17.10.			**lbs/hour**	**lbs/hour**	tons/year	tons/year
17.11.			**lbs/hour**	**lbs/hour**	tons/year	tons/year
17.12.			**lbs/hour**	**lbs/hour**	tons/year	tons/year
17.13.			**lbs/hour**	**lbs/hour**	tons/year	tons/year
17.14.			**lbs/hour**	**lbs/hour**	tons/year	tons/year
17.15.			**lbs/hour**	**lbs/hour**	tons/year	tons/year
17.16.			**lbs/hour**	**lbs/hour**	tons/year	tons/year
17.17			**lbs/hour**	**lbs/hour**	tons/year	tons/year
17.18.			**lbs/hour**	**lbs/hour**	tons/year	tons/year

18. Provide Any Additional Information Necessary to Understanding the Emission Rates Provided Above:

Attach the Basis of Determination or Calculations for each Emission Rate provided above.

If there are more than four Emission Points/Stacks, attach additional copies of this form as needed.

Overall Process Emissions

19. Pollutant Emissions

If more than 18 pollutants are emitted from this Process, attach additional copies of this page as needed.

	Pollutant Name (Specify VOCs and HAPs Individually in 19.10 through 19.18)	CAS Number (Not required for 19.1 through 19.9)	Maximum Uncontrolled Emission Rate at Design Capacity	Maximum Controlled Emission Rate at Design Capacity	Annual Potential to Emit (PTE)	Expected Annual Emissions
19.1.	Particulate Matter (PM)		**N/A lbs/hour**	**N/A lbs/hour**	**N/A** tons/year	**N/A** tons/year
19.2.	PM_{10}		**N/A lbs/hour**	**N/A lbs/hour**	**N/A** tons/year	**N/A** tons/year
19.3.	$PM_{2.5}$		**N/A lbs/hour**	**N/A lbs/hour**	**N/A** tons/year	**N/A** tons/year
19.4.	Sulfur Oxides (SO_X)		**N/A lbs/hour**	**N/A lbs/hour**	**N/A** tons/year	**N/A** tons/year
19.5.	Nitrogen Oxides (NO_X)		**152.0 ppmvd @ 0% O2 on a 7-day rolling average; 115.2 ppmvd @ 0% O2 on a 365-day rolling average lbs/hour**	**152.0 ppmvd @ 0% O2 on a 7-day rolling average; 115.2 ppmvd @ 0% O2 on a 365-day rolling average lbs/hour**	**N/A** tons/year	**N/A** tons/year
19.6.	Carbon Monoxide (CO)		**N/A lbs/hour**	**N/A lbs/hour**	**N/A** tons/year	**N/A** tons/year
19.7.	Lead		**N/A lbs/day**	**N/A lbs/day**	**N/A** tons/year	**N/A** tons/year
19.8.	Total Volatile Organic Compounds (VOCs)		**N/A lbs/hour**	**N/A lbs/hour**	**N/A** tons/year	**N/A** tons/year
19.9.	Total Hazardous Air Pollutants (HAPs)		**lbs/hour**	**lbs/hour**	tons/year	tons/year
19.10.			**lbs/hour**	**lbs/hour**	**N/A** tons/year	**N/A** tons/year
19.11.			**lbs/hour**	**lbs/hour**	tons/year	tons/year
19.12.			**lbs/hour**	**lbs/hour**	tons/year	tons/year
19.13.			**lbs/hour**	**lbs/hour**	tons/year	tons/year
19.14.			**lbs/hour**	**lbs/hour**	tons/year	tons/year

Overall Process Emissions

19.15.		**lbs/hour**	**lbs/hour**	tons/year	tons/year
19.16.		**lbs/hour**	**lbs/hour**	tons/year	tons/year
19.17		**lbs/hour**	**lbs/hour**	tons/year	tons/year
19.18.		**lbs/hour**	**lbs/hour**	tons/year	tons/year

20. Provide Any Additional Information Necessary to Understanding the Emission Rates Provided Above: **See attached.**

Attach the Basis of Determination or Calculations for each Emission Rate provided above.

Minor New Source Review Information

21. Does the Process Have the Potential to Emit More Than Five Tons Per Year of Any Pollutant? ☒ YES ☐ NO

22. Is the Source New or Existing? ☐ NEW ☒ EXISTING
See Question 11 of AQM-1

If the Process has the Potential to Emit more than five tons per year of any pollutant, and is a New Source, a Control Technology Analysis pursuant to Regulation No. 1125 Section 4 must be conducted and attached to this application.

Additional Information

23. Is There Any Additional Information Pertinent to this Application? ☒ YES ☐ NO

If YES, complete the rest of Question 23.

23.1. Describe: **See attached.**

Attachment C

Permit Application: APC-82/0981-OPERATION (Amendment 9)(NSPS) Fluid Catalytic Cracking Unit (FCCU), FCCU Carbon Monoxide Boiler, and Wet Gas Scrubber System

DNREC – Air Quality Management Section
Application to Construct, Operate, or Modify Stationary Sources

Administrative Information

If you are using this form electronically, press F1 at any time for help
All Application Forms Should Be Mailed To:
Air Quality Management
Blue Hen Corporate Center
655 S. Bay Road, Suite 5 N
Dover, DE 19901

All Checks Should Be Made Payable To:
State of Delaware

For Department Use Only

Date Received Stamp | Assigned Permit Number

Company and Site Information

1. Company Name: **Delaware City Refining Company, LLC**
2. Company Mailing Address: **4550 Wrangle Hill Road**
   City: **Delaware City** State: **Delaware** Zip Code: **19706**
3. Site Name: **Same as above**
4. Site Mailing Address: **Same as above**
   (if different from above)
   City: State: Zip Code:
5. Physical Location of Site: **Same as above**
   (if different from above)
   City: State: Zip Code:
6. Air Quality Management Facility ID Number: **1000300016**
7. Site NAICS Code): **324110**
   (list all that apply
8. Site SIC Code: : **2911**
   (list all that apply)
9. Site Location Coordinates: **Lat/Long: 39.5778/-75.5892**
10. Is the Facility New or Existing? ☐ NEW ☒ EXISTING

If the Facility is an Existing Facility, Complete the Rest of Question 10. If Not, Proceed to Question 11.

10.1. Does the Facility Have Active Air Permits? ☒ YES ☐ NO

Company and Site Information

11. Is this Application For a New Source or Modification of an Existing Source?
☐ New Source
☒ Modification of Existing Source
☐ Other (Specify):

If the application is for the modification of an existing source, complete the rest of Question 11. If not, proceed to Question 12.

11.1. Does the Source Have an Active Air Permit? ☒ YES ☐ NO

If the source has an active air permit, complete the rest of Question 11. If not, proceed to Question 12.

11.2. Permit Number of Existing Source: **AQM-003/00016**

12. Status of Source Being Applied For: ☐ Natural Minor Source ☐ Synthetic Minor Source ☒ Major Source

13. Facility Status: ☐ Natural Minor Facility ☐ Synthetic Minor Facility ☒ Major Facility

If the source is a Major Source, complete the rest of Question 13. If not, proceed to Question 14.

13.1. Responsible Official Name: **Jose Dominguez**

13.2. Responsible Official Title: **Refinery Manager**

Contact Information

14. Name of Owner or Facility Manager: **Jose Dominguez**

15. Title of Owner or Facility Manager: **Refinery Manager**

16. Permit Contact Name: **Thomas Godlewski**

17. Permit Contact Title: **Environmental Manager**

18. Permit Contact Telephone Number: **302-834-6053**

19. Permit Contact Fax Number:

20. Permit Contact E-Mail Address: **Thomas.Godlewski@pbfenergy.com**

Proposed Operating Schedule

21. Proposed Operating Schedule: **24** hours/day **7** days/week **52** weeks/year

21.1. Is There Any Additional Information Regarding the Operating Schedule? ☐ YES ☒ NO

If YES, complete the rest of Question 21. If NO, proceed to Question 22.

21.2. Describe the Additional Information:

Coastal Zone Information

22. Is the Facility Located in the Coastal Zone? ☒ YES ☐ NO

If the facility is located in the Coastal Zone complete the rest of Question 22. If not, proceed to Question 23.

22.1. Is a Coastal Zone Permit Required for Construction or Operation of the Source Being Applied for? ☐ YES ☒ NO

Attach a copy of the Coastal Zone Determination if it has not been previously submitted

If a Coastal Zone Permit is required complete the rest of Question 22. If not, proceed to Question 23.

22.2. Has a Coastal Zone Permit Been Issued? ☐ YES ☐ NO

Attach a copy of the Coastal Zone Permit if it has not been previously submitted

Local Zoning Information

23. Parcel Zoning: **HI - Heavy Industrial**

Attach Proof of Local Zoning if it has not been previously submitted

Application Information

24. Is the Appropriate Application Fee Attached? ☒ YES ☐ NO

25. Is the Advertising Fee Attached? ☒ YES ☐ NO

Attach the appropriate fees. Note that your Application will not be considered complete if the appropriate fees are not included.

26. Is a Cover Letter Describing the Process Attached? ☒ YES ☐ NO

Attach a brief cover letter describing your Application.

If the Facility is a New Facility complete Question 27. If not, proceed to Question 28.

27. Is a Copy of the Applicant Background Information Questionnaire on Record at the Department? ☒ YES ☐ NO

If NO, complete the rest of Question 27. If YES, process to Question 28.

27.1 Is a Copy of the Applicant Background Information Questionnaire Attached? ☐ YES ☐ NO

Attach a copy of the Applicant Background Information Questionnaire if applicable.

28. Check Which Application Forms are Attached:

☒ AQM-1	☐ AQM-3.4	☐ AQM-3.9	☐ AQM-3.14	☐ AQM-4.4	☐ AQM-4.9	☐ AQM-6
☒ AQM-2	☐ AQM-3.5	☐ AQM-3.10	☐ AQM-3.15	☐ AQM-4.5	☐ AQM-4.10	
☒ AQM-3.1	☐ AQM-3.6	☐ AQM-3.11	☐ AQM-4.1	☐ AQM-4.6	☐ AQM-4.11	
☐ AQM-3.2	☐ AQM-3.7	☐ AQM-3.12	☐ AQM-4.2	☐ AQM-4.7	☐ AQM-4.12	
☐ AQM-3.3	☐ AQM-3.8	☐ AQM-3.13	☐ AQM-4.3	☐ AQM-4.8	☒ AQM-5	

Application Information

29. Check Which Documents are Attached:

- ☐ Coastal Zone Determination
- ☐ Coastal Zone Permit
- ☐ Proof of Local Zoning
- ☒ Application Fee
- ☒ Advertising Fee
- ☐ Applicant Background Information Questionnaire
- ☐ Claim of Confidentiality
- ☐ Manufacturer Specification(s)
- ☐ Material Safety Data Sheets (MSDSs)
- ☐ Supporting Calculations
- ☒ Descriptive Cover Letter
- ☐ Other (Specify):

Confidentiality Information

30. Do You Consider Any of the Information Submitted With this Application Confidential? ☐ YES ☒ NO

If a Claim of Confidentiality is made it MUST meet the requirements of Section 6 of DNREC's Freedom of Information ("FOIA") Regulation at the time the Application is submitted.

Signature Block

I, the undersigned, hereby certify under penalty of law that I have personally examined and am familiar with the information submitted in this document and all of its attachments as to the truth, accuracy, and completeness of this information. I certify based on information and belief formed after reasonable inquiry, the statements and information in this document are true, accurate, and complete. By signing this form, I certify that I have not changed, altered, or deleted any portions of this application. I acknowledge that I cannot commence construction, alteration, modification or initiate operation until I receive written approval (i.e. permit, registration, or exemption letter) from the Department. I acknowledge that I may be required to perform testing of the equipment to receive construction or operation approval, and that if I do not receive approval to construct or operate that I may appeal the decision.

Jose Dominguez
Owner or Authorized Agent

7-21-14
Date

FOR J
Signature of Owner or Authorized Agent

All Application Forms Should Be Mailed To:
Air Quality Management
Blue Hen Corporate Center
655 S. Bay Road, Suite 5 N
Dover, Delaware 19901

All Checks Should Be Made Payable To:
State of Delaware

Process Flow Diagram

Sketch the Process Flow Diagram for the equipment or process being applied for. Include each emission unit and control device (even existing emission units that will not be modified by this application). You may identify each emission unit with a simple shape. Label each emission unit and control device with a unique identifier. Show the relationship between each emission unit and/or control device by drawing arrows between them to indicate the flow of air pollutants. List which application forms are included for each emission unit or control device below the shape representing each emission unit or control device . See http://www.delaware.gov/reg2/default.htm for example Process Flow Diagrams for common processes. If you already have a Process Flow Diagram for the equipment or process being applied for, you may attach it to the application instead of using this form.

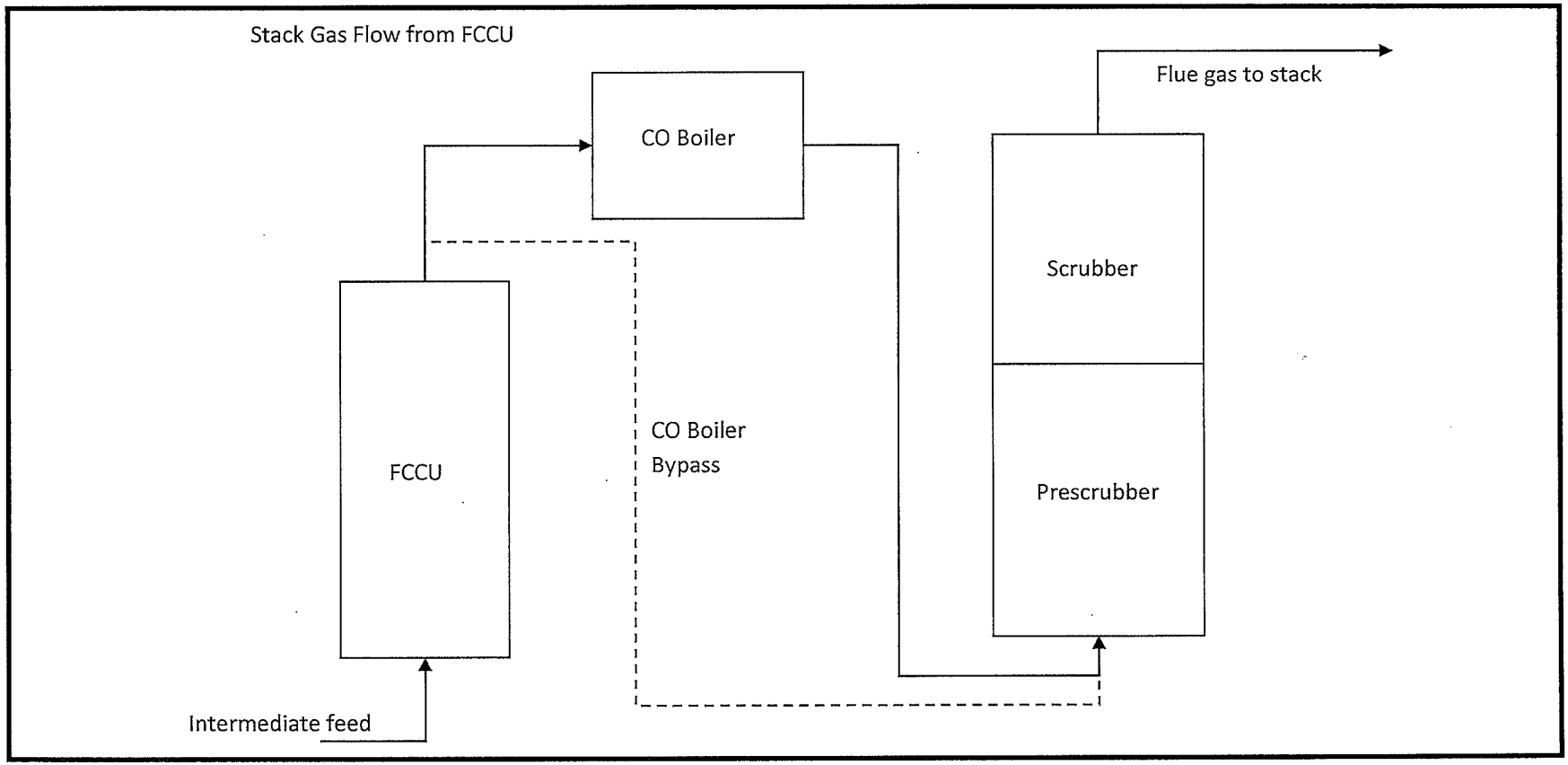

Generic Process Equipment Application

If you are using this form electronically, press F1 at any time for help

General Information

1.	Facility Name: **Delaware City Refining Company, LLC**
2.	Equipment ID Number: **Unit #23 (FCCU, CO Boiler, WGS)**
3.	Provide a brief description of Equipment or Process: **Fluid Catalytic Cracking Unit for conversion of refinery intermediates. FCCU also includes CO Boiler and Wet Gas Scrubber (Belco WGS with Cansolv absorber).**
4.	Manufacturer: **Not applicable**
5.	Model: **Not applicable**
6.	Serial Number: **Not applicable**

Raw Material Information

7. Raw Materials Used in Process

If there are more than four Raw Materials used, attach additional copies of this page as needed.

	Raw Material Used	CAS Number	Usage Rate (include units)	MSDS Attached?
7.1.	**Refinery Intermediates**	**Not applicable**	**~143,500 gal/hr**	☐ YES ☒ NO
7.2.				☐ YES ☐ NO
7.3.				☐ YES ☐ NO
7.4.				☐ YES ☐ NO

Attach a copy of all calculations made to support the data in the table above.
Attach a Material Safety Data Sheet (MSDS) for each Raw Material used.

Products Produced Information

8. Products Produced

If there are more than four Products Produced, attach additional copies of this page as needed.

	Product Produced	CAS Number	Production Rate (include units)	MSDS Attached?
8.1.	**Refinery Intermediates**	**Not applicable**	**~143,500 gal/hr**	☐ YES ☒ NO
8.2.				☐ YES ☐ NO
8.3.				☐ YES ☐ NO
8.4.				☐ YES ☐ NO

Attach a copy of all calculations made to support the data in the table above.
Attach a Material Safety Data Sheet (MSDS) for each Product Produced.

Byproducts Generated Information

9. Byproducts Generated

If there are more than four Byproducts Generated, attach additional copies of this page as needed.

	Byproduct Generated	CAS Number	Generation Rate (include units)	MSDS Attached?
9.1.				☐ YES ☐ NO
9.2.				☐ YES ☐ NO
9.3.				☐ YES ☐ NO
9.4.				☐ YES ☐ NO

Attach a copy of all calculations made to support the data in the table above.
Attach a Material Safety Data Sheet (MSDS) for each Byproduct Generated.

General Information

10. Manufacturer's Rated Capacity or Maximum Throughput of Equipment or Process: **The design inlet capacity of the FCCU is approximately 82,000 barrels per day.**

11. Describe Important Manufacturer Specifications and/or Operating Parameters for Equipment or Process: **NA**

Attach the Manufacturer's Specification Sheet(s) for the equipment or process.

Control Device Information

12. Is an Air Pollution Control Device Used? ☒ YES ☐ NO

If an Air Pollution Control Device is used, complete the rest of Question 12. If not, proceed to Question 13.

12.1. Is Knockout Used? ☐ YES ☒ NO

If YES, complete Form AQM-4.11 and attach it to this application.

12.2. Is a Settling Chamber Used? ☐ YES ☒ NO

If YES, complete Form AQM-4.10 and attach it to this application.

12.3. Is an Inertial or Cyclone Collector Used? ☐ YES ☒ NO

If YES, complete Form AQM-4.5 and attach it to this application.

12.4. Is a Fabric Collector or Baghouse Used? ☐ YES ☒ NO

If YES, complete Form AQM-4.6 and attach it to this application.

12.5. Is a Venturi Scrubber Used? ☐ YES ☒ NO

If YES, complete Form AQM-4.8 and attach it to this application.

12.6. Is an Electrostatic Precipitator Used? ☐ YES ☒ NO

If YES, complete Form AQM-4.7 and attach it to this application.

Control Device Information

12.7. Is Adsorption Equipment Used? ☐ YES ☒ NO

If YES, complete Form AQM-4.2 and attach it to this application.

12.8. Is a Scrubber Used? ☐ YES ☒ NO

If YES, complete Form AQM-4.4 and attach it to this application.

12.9. Is an Incinerator, Afterburner or Oxidizer Used? ☐ YES ☒ NO

If YES, complete Form AQM-4.1 and attach it to this application.

12.10. Is a Flare Used? ☐ YES ☒ NO

If YES, complete Form AQM-4.3 and attach it to this application.

12.11. Is Any Other Control Device Used? ☐ YES ☒ NO

If YES, attach a copy of the control device Manufacturer's Specification Sheet(s).

If any other control device is used, complete the rest of Question 12. If not, proceed to Question 13.

12.12. Describe Control Device: **Wet Gas Scrubber with Belco WGS and Cansolv absorber.**

12.13. Pollutants Controlled: ☐ VOCs ☐ HAPs ☐ PM ☐ PM_{10} ☐ $PM_{2.5}$ ☐ NO_X ☒ SO_X ☐ Metals
☐ Other (Specify):

12.14. Control Device Manufacturer:

12.15. Control Device Model:

12.16. Control Device Serial Number:

12.17. Control Device Design Capacity:

12.18. Control Device Removal or Destruction Efficiency: **98%**

Stack Information

13. How Does the Process Equipment Vent:
(check all that apply)
☐ Directly to the Atmosphere
☐ Through a Control Device Covered by Forms AQM-4.1 through 4.12
☒ Through Another Control Device Described on This Form

If any of the process equipment vents directly to the atmosphere or through another control device described on this form, proceed to Question 14. If the process equipment vents through a control device, provide the stack parameters on the control device form and proceed to Question 18.

14. Number of Air Contaminant Emission Points: **1**

If there are more than three Emission Points, attach additional copies of this page as needed.

For the first Emission Point

15. Emission Point Name: **FCCU WGS Stack**

15.1. Stack Height Above Grade: **195 feet**

15.2. Stack Exit Diameter: **12.5 feet**
(Provide Stack Dimensions If Rectangular Stack)

15.3. Is a Stack Cap Present? ☐ YES ☒ NO

15.4. Stack Configuration: ☒ Vertical ☐ Horizontal ☐ Downward-Venting

Stack Information

(check all that apply)	☐ Other (Specify):
15.5. Stack Exit Gas Temperature: **115 °F**	
15.6. Stack Exit Gas Flow Rate: **300,000 ACFM**	
15.7. Distance to Nearest Property Line: **2598 feet**	
15.8. Describe Nearest Obstruction: **CO Boiler**	
15.9. Height of Nearest Obstruction: **170 feet**	
15.10. Distance to Nearest Obstruction: **154 feet**	
15.11. Are Stack Sampling Ports Provided?	☒ YES ☐ NO
For the second Emission Point. If there is no second Emission Point, proceed to Question 18.	
16. Emission Point Name:	
16.1. Stack Height Above Grade: **feet**	
16.2. Stack Exit Diameter: **feet** *(Provide Stack Dimensions If Rectangular Stack)*	
16.3. Is a Stack Cap Present?	☐ YES ☐ NO
16.4. Stack Configuration: *(check all that apply)*	☐ Vertical ☐ Horizontal ☐ Downward-Venting ☐ Other (Specify):
16.5. Stack Exit Gas Temperature: **°F**	
16.6. Stack Exit Gas Flow Rate: **ACFM**	
16.7. Distance to Nearest Property Line: **feet**	
16.8. Describe Nearest Obstruction:	
16.9. Height of Nearest Obstruction: **feet**	
16.10. Distance to Nearest Obstruction: **feet**	
16.11. Are Stack Sampling Ports Provided?	☐ YES ☐ NO
For the third Emission Point. If there is no third Emission Point, proceed to Question 18.	
17. Emission Point Name:	
17.1. Stack Height Above Grade: **feet**	
17.2. Stack Exit Diameter: **feet** *(Provide Stack Dimensions If Rectangular Stack)*	
17.3. Is a Stack Cap Present?	☐ YES ☐ NO
17.4. Stack Configuration: *(check all that apply)*	☐ Vertical ☐ Horizontal ☐ Downward-Venting ☐ Other (Specify):
17.5. Stack Exit Gas Temperature: **°F**	
17.6. Stack Exit Gas Flow Rate: **ACFM**	
17.7. Distance to Nearest Property Line: **feet**	
17.8. Describe Nearest Obstruction:	
17.9. Height of Nearest Obstruction: **feet**	

Stack Information

17.10. Distance to Nearest Obstruction: **feet**

17.11. Are Stack Sampling Ports Provided? ☐ YES ☐ NO

Monitoring Information

18. Will Emissions Data be Recorded by a Continuous Emission Monitoring System? ☒ YES ☐ NO

If Yes, attach a copy of the Continuous Emission Monitoring System Manufacturer's Specification Sheets

If YES, complete the rest of Question 18. If NO, proceed to Question 19.

18.1. Pollutants Monitored: ☐ VOCs ☐ HAPs ☐ PM ☐ PM_{10} ☐ $PM_{2.5}$ ☒ NO_X ☒ SO_X ☐ Metals ☒ Other (Specify): **CO, O2, volumetric flow**

18.2. Describe the Continuous Emission Monitoring System: **CEMS system currently installed, no changes.**

18.3. Manufacturer:

18.4. Model:

18.5. Serial Number:

18.6. Will Multiple Emission Units Be Monitored at the Same Point? ☐ YES ☒ NO

If YES, complete the rest of Question 18. If NO, proceed to Question 19.

18.7. Emission Units Monitored:

18.8. Will More Than One Emission Unit be Emitting From the Combined Point At Any Time? ☐ YES ☐ NO

If YES, complete the rest of Question 18. If NO, proceed to Question 19.

18.9. Emission Units Emitting Simultaneously:

Monitoring and Alarm Information

19. Are There Any Alarms You Would Like the Department to Consider When Drafting the Permit? ☐ YES ☒ NO

If YES, complete the rest of Question 19. If NO, proceed to Question 20.

19.1. Describe the System Alarm(s):

If there are more than five alarms, attach additional copies of this page as needed.

	Operating Parameter Monitored	Describe Alarm Trigger	Monitoring Device or Alarm Type	Does the Alarm Initiate an Automated Response?
19.1.1.			☐ Visual ☐ Auditory ☐ Automatic (Remote Monitoring) ☐ Other	☐ NO ☐ YES Describe:
19.1.2.			☐ Visual	☐ NO ☐ YES

Monitoring and Alarm Information

			☐ Auditory ☐ Automatic (Remote Monitoring) ☐ Other	Describe:
19.1.3.			☐ Visual ☐ Auditory ☐ Automatic (Remote Monitoring) ☐ Other	☐ NO ☐ YES Describe:
19.1.4.			☐ Visual ☐ Auditory ☐ Automatic (Remote Monitoring) ☐ Other	☐ NO ☐ YES Describe:
19.1.5.			☐ Visual ☐ Auditory ☐ Automatic (Remote Monitoring) ☐ Other	☐ NO ☐ YES Describe:

Emissions Information

20. Do You Plan to Take Any Emission Limitations to Avoid Major Source Status, Minor New Source Review, MACT, NSPS, etc.? ☐ YES ☒ NO

If YES, complete the rest of Question 20. If NO, proceed to Question 21.

20.1. Describe Any Proposed Emission Limitations:

Operating Information

21. Do You Plan to Take Any Operating Limitations to Avoid Major Source Status, Minor New Source Review, MACT, NSPS, etc.? ☐ YES ☒ NO

If YES, complete the rest of Question 21. If NO, proceed to Question 22.

21.1. Describe Any Proposed Operating Limitations:

Additional Information

22. Is There Any Additional Information Pertinent to this Application? ☒ YES ☐ NO

If YES, complete the rest of Question 22.

Additional Information
22.1. Describe: **See attached.**

Emissions Information Application

If you are using this form electronically, press F1 at any time for help

Process Information

1.	Number of Individual Pieces of Process Equipment in Process: **1 emission point/stack for FCCU**
2.	Number of Individual Control Devices in Process: **FCCU has CO Boiler and Belco WGS system w/ Cansolv Absorber. There are no emissions changes to criteria pollutants, except the incorporation of NOx limits, associated with this submittal.**

Emissions Information for First Emission Point/Stack

3.	Emission Point Name: **FCCU WGS Stack**
4.	Equipment ID Number for all Process Equipment and Control Devices Venting Through Emission Point/Stack: **Unit 23**
5.	Pollutant Emissions

If more than 18 pollutants are emitted at this Emission Point/Stack, attach additional copies of this page as needed.

	Pollutant Name (Specify VOCs and HAPs Individually in 5.10 through 5.18)	CAS Number (Not required for 5.1 through 5.9)	Maximum Uncontrolled Emission Rate at Design Capacity	Maximum Controlled Emission Rate at Design Capacity	Annual Potential to Emit (PTE)	Expected Annual Emissions
5.1.	Particulate Matter (PM)		**N/A lbs/hour**	**N/A lbs/hour**	**N/A** tons/year	**N/A** tons/year
5.2.	PM_{10}		**N/A lbs/hour**	**N/A lbs/hour**	**N/A** tons/year	**N/A** tons/year
5.3.	$PM_{2.5}$		**N/A lbs/hour**	**N/A lbs/hour**	**N/A** tons/year	**N/A** tons/year
5.4.	Sulfur Oxides (SO_X)		**N/A lbs/hour**	**N/A lbs/hour**	**N/A** tons/year	**N/A** tons/year
5.5.	Nitrogen Oxides (NO_X)		**137.0 ppmvd @ 0% O2 on a 7-Day rolling average; 100.7 ppmvd @ 0% O2 on a 365-day rolling average lbs/hour**	**137.0 ppmvd @ 0% O2 on a 7-Day rolling average; 100.7 ppmvd @ 0% O2 on a 365-day rolling average lbs/hour**	**N/A** tons/year	**N/A** tons/year
5.6.	Carbon Monoxide (CO)		**N/A lbs/hour**	**N/A lbs/hour**	**N/A** tons/year	**N/A** tons/year

Emissions Information for First Emission Point/Stack

5.7.	Lead		**N/A lbs/day**	**N/A lbs/day**	**N/A** tons/year	**N/A** tons/year
5.8.	Total Volatile Organic Compounds (VOCs)		**N/A lbs/hour**	**N/A lbs/hour**	**N/A** tons/year	**N/A** tons/year
5.9.	Total Hazardous Air Pollutants (HAPs)		**lbs/hour**	**lbs/hour**	tons/year	tons/year
5.10.			**lbs/hour**	**lbs/hour**	tons/year	tons/year
5.11.			**lbs/hour**	**lbs/hour**	tons/year	tons/year
5.12.			**lbs/hour**	**lbs/hour**	tons/year	tons/year
5.13.			**lbs/hour**	**lbs/hour**	tons/year	tons/year
5.14.			**lbs/hour**	**lbs/hour**	tons/year	tons/year
5.15.			**lbs/hour**	**lbs/hour**	tons/year	tons/year
5.16.			**lbs/hour**	**lbs/hour**	tons/year	tons/year
5.17			**lbs/hour**	**lbs/hour**	tons/year	tons/year
5.18.			**lbs/hour**	**lbs/hour**	tons/year	tons/year

6. Provide Any Additional Information Necessary to Understanding the Emission Rates Provided Above: **See attached report.**

Attach the Basis of Determination or Calculations for each Emission Rate provided above.

Emissions Information for Second Emission Point/Stack

7. Emission Point Name: **Not applicable**

8. Equipment ID Number for all Process Equipment and Control Devices Venting Through Emission Point/Stack:

9. Pollutant Emissions

If more than 18 pollutants are emitted at this Emission Point/Stack, attach additional copies of this page as needed.

Emissions Information for Second Emission Point/Stack

	Pollutant Name (Specify VOCs and HAPs Individually in 9.10 through 9.18)	CAS Number (Not required for 9.1 through 9.9)	Maximum Uncontrolled Emission Rate at Design Capacity	Maximum Controlled Emission Rate at Design Capacity	Annual Potential to Emit (PTE)	Expected Annual Emissions
9.1.	Particulate Matter (PM)		**lbs/hour**	**lbs/hour**	tons/year	tons/year
9.2.	PM_{10}		**lbs/hour**	**lbs/hour**	tons/year	tons/year
9.3.	$PM_{2.5}$		**lbs/hour**	**lbs/hour**	tons/year	tons/year
9.4.	Sulfur Oxides (SO_X)		**lbs/hour**	**lbs/hour**	tons/year	tons/year
9.5.	Nitrogen Oxides (NO_X)		**lbs/hour**	**lbs/hour**	tons/year	tons/year
9.6.	Carbon Monoxide (CO)		**lbs/hour**	**lbs/hour**	tons/year	tons/year
9.7.	Lead		**lbs/hour**	**lbs/hour**	tons/year	tons/year
9.8.	Total Volatile Organic Compounds (VOCs)		**lbs/hour**	**lbs/hour**	tons/year	tons/year
9.9.	Total Hazardous Air Pollutants (HAPs)		**lbs/hour**	**lbs/hour**	tons/year	tons/year
9.10.			**lbs/hour**	**lbs/hour**	tons/year	tons/year
9.11.			**lbs/hour**	**lbs/hour**	tons/year	tons/year
9.12.			**lbs/hour**	**lbs/hour**	tons/year	tons/year
9.13.			**lbs/hour**	**lbs/hour**	tons/year	tons/year
9.14.			**lbs/hour**	**lbs/hour**	tons/year	tons/year
9.15.			**lbs/hour**	**lbs/hour**	tons/year	tons/year
9.16.			**lbs/hour**	**lbs/hour**	tons/year	tons/year
9.17			**lbs/hour**	**lbs/hour**	tons/year	tons/year
9.18.			**lbs/hour**	**lbs/hour**	tons/year	tons/year

Emissions Information for Second Emission Point/Stack

10. Provide Any Additional Information Necessary to Understanding the Emission Rates Provided Above:

Attach the Basis of Determination or Calculations for each Emission Rate provided above.

Emissions Information for Third Emission Point/Stack

11. Emission Point Name: **Not applicable**

12. Equipment ID Number for all Process Equipment and Control Devices Venting Through Emission Point/Stack:

13. Pollutant Emissions

If more than 18 pollutants are emitted at this Emission Point/Stack, attach additional copies of this page as needed.

	Pollutant Name (Specify VOCs and HAPs Individually in 13.10 through 13.18)	CAS Number (Not required for 13.1 through 13.9)	Maximum Uncontrolled Emission Rate at Design Capacity	Maximum Controlled Emission Rate at Design Capacity	Annual Potential to Emit (PTE)	Expected Annual Emissions
13.1.	Particulate Matter (PM)		**lbs/hour**	**lbs/hour**	tons/year	tons/year
13.2.	PM_{10}		**lbs/hour**	**lbs/hour**	tons/year	tons/year
13.3.	$PM_{2.5}$		**lbs/hour**	**lbs/hour**	tons/year	tons/year
13.4.	Sulfur Oxides (SO_X)		**lbs/hour**	**lbs/hour**	tons/year	tons/year
13.5.	Nitrogen Oxides (NO_X)		**lbs/hour**	**lbs/hour**	tons/year	tons/year
13.6.	Carbon Monoxide (CO)		**lbs/hour**	**lbs/hour**	tons/year	tons/year
13.7.	Lead		**lbs/hour**	**lbs/hour**	tons/year	tons/year
13.8.	Total Volatile Organic Compounds (VOCs)		**lbs/hour**	**lbs/hour**	tons/year	tons/year
13.9.	Total Hazardous Air Pollutants (HAPs)		**lbs/hour**	**lbs/hour**	tons/year	tons/year
13.10.			**lbs/hour**	**lbs/hour**	tons/year	tons/year

Emissions Information for Third Emission Point/Stack

13.11.		**lbs/hour**	**lbs/hour**	tons/year	tons/year
13.12.		**lbs/hour**	**lbs/hour**	tons/year	tons/year
13.13.		**lbs/hour**	**lbs/hour**	tons/year	tons/year
13.14.		**lbs/hour**	**lbs/hour**	tons/year	tons/year
13.15.		**lbs/hour**	**lbs/hour**	tons/year	tons/year
13.16.		**lbs/hour**	**lbs/hour**	tons/year	tons/year
13.17		**lbs/hour**	**lbs/hour**	tons/year	tons/year
13.18.		**lbs/hour**	**lbs/hour**	tons/year	tons/year

14. Provide Any Additional Information Necessary to Understanding the Emission Rates Provided Above:

Attach the Basis of Determination or Calculations for each Emission Rate provided above.

Emissions Information for Fourth Emission Point/Stack

15. Emission Point Name: **Not applicable**

16. Equipment ID Number for all Process Equipment and Control Devices Venting Through Emission Point/Stack:

17. Pollutant Emissions

If more than 18 pollutants are emitted at this Emission Point/Stack, attach additional copies of this page as needed.

Pollutant Name (Specify VOCs and HAPs Individually in 17.10 through 17.18)	CAS Number (Not required for 17.1 through 17.9)	Maximum Uncontrolled Emission Rate at Design Capacity	Maximum Controlled Emission Rate at Design Capacity	Annual Potential to Emit (PTE)	Expected Annual Emissions
17.1. Particulate Matter (PM)		**lbs/hour**	**lbs/hour**	tons/year	tons/year
17.2. PM_{10}		**lbs/hour**	**lbs/hour**	tons/year	tons/year

Emissions Information for Fourth Emission Point/Stack

17.3.	$PM_{2.5}$		**lbs/hour**	**lbs/hour**	tons/year	tons/year
17.4.	Sulfur Oxides (SO_X)		**lbs/hour**	**lbs/hour**	tons/year	tons/year
17.5.	Nitrogen Oxides (NO_X)		**lbs/hour**	**lbs/hour**	tons/year	tons/year
17.6.	Carbon Monoxide (CO)		**lbs/hour**	**lbs/hour**	tons/year	tons/year
17.7.	Volatile Organic Compounds (VOCs)		**lbs/hour**	**lbs/hour**	tons/year	tons/year
17.8.	Lead		**lbs/hour**	**lbs/hour**	tons/year	tons/year
17.9.			**lbs/hour**	**lbs/hour**	tons/year	tons/year
17.10.			**lbs/hour**	**lbs/hour**	tons/year	tons/year
17.11.			**lbs/hour**	**lbs/hour**	tons/year	tons/year
17.12.			**lbs/hour**	**lbs/hour**	tons/year	tons/year
17.13.			**lbs/hour**	**lbs/hour**	tons/year	tons/year
17.14.			**lbs/hour**	**lbs/hour**	tons/year	tons/year
17.15.			**lbs/hour**	**lbs/hour**	tons/year	tons/year
17.16.			**lbs/hour**	**lbs/hour**	tons/year	tons/year
17.17			**lbs/hour**	**lbs/hour**	tons/year	tons/year
17.18.			**lbs/hour**	**lbs/hour**	tons/year	tons/year

18. Provide Any Additional Information Necessary to Understanding the Emission Rates Provided Above:

Attach the Basis of Determination or Calculations for each Emission Rate provided above.

If there are more than four Emission Points/Stacks, attach additional copies of this form as needed.

Overall Process Emissions

19. Pollutant Emissions

If more than 18 pollutants are emitted from this Process, attach additional copies of this page as needed.

	Pollutant Name (Specify VOCs and HAPs Individually in 19.10 through 19.18)	CAS Number (Not required for 19.1 through 19.9)	Maximum Uncontrolled Emission Rate at Design Capacity	Maximum Controlled Emission Rate at Design Capacity	Annual Potential to Emit (PTE)	Expected Annual Emissions
19.1.	Particulate Matter (PM)		**N/A lbs/hour**	**N/A lbs/hour**	**N/A** tons/year	**N/A** tons/year
19.2.	PM_{10}		**N/A lbs/hour**	**N/A lbs/hour**	**N/A** tons/year	**N/A** tons/year
19.3.	$PM_{2.5}$		**N/A lbs/hour**	**N/A lbs/hour**	**N/A** tons/year	**N/A** tons/year
19.4.	Sulfur Oxides (SO_X)		**N/A lbs/hour**	**N/A lbs/hour**	**N/A** tons/year	**N/A** tons/year
19.5.	Nitrogen Oxides (NO_X)		**137.0 ppmvd @ 0% O2 on a 7-Day rolling average; 100.7 ppmvd @ 0% O2 on a 365-day rolling average lbs/hour**	**137.0 ppmvd @ 0% O2 on a 7-Day rolling average; 100.7 ppmvd @ 0% O2 on a 365-day rolling average lbs/hour**	**N/A** tons/year	**N/A** tons/year
19.6.	Carbon Monoxide (CO)		**N/A lbs/hour**	**N/A lbs/hour**	**N/A** tons/year	**N/A** tons/year
19.7.	Lead		**N/A lbs/day**	**N/A lbs/day**	**N/A** tons/year	**N/A** tons/year
19.8.	Total Volatile Organic Compounds (VOCs)		**N/A lbs/hour**	**N/A lbs/hour**	**N/A** tons/year	**N/A** tons/year
19.9.	Total Hazardous Air Pollutants (HAPs)		**lbs/hour**	**lbs/hour**	tons/year	tons/year
19.10.			**lbs/hour**	**lbs/hour**	**N/A** tons/year	**N/A** tons/year
19.11.			**lbs/hour**	**lbs/hour**	tons/year	tons/year
19.12.			**lbs/hour**	**lbs/hour**	tons/year	tons/year
19.13.			**lbs/hour**	**lbs/hour**	tons/year	tons/year
19.14.			**lbs/hour**	**lbs/hour**	tons/year	tons/year

Overall Process Emissions

19.15.		lbs/hour	lbs/hour	tons/year	tons/year
19.16.		lbs/hour	lbs/hour	tons/year	tons/year
19.17		lbs/hour	lbs/hour	tons/year	tons/year
19.18.		lbs/hour	lbs/hour	tons/year	tons/year

20. Provide Any Additional Information Necessary to Understanding the Emission Rates Provided Above: **See attached.**

Attach the Basis of Determination or Calculations for each Emission Rate provided above.

Minor New Source Review Information

21. Does the Process Have the Potential to Emit More Than Five Tons Per Year of Any Pollutant? ☒ YES ☐ NO

22. Is the Source New or Existing? ☐ NEW ☒ EXISTING
See Question 11 of AQM-1

If the Process has the Potential to Emit more than five tons per year of any pollutant, and is a New Source, a Control Technology Analysis pursuant to Regulation No. 1125 Section 4 must be conducted and attached to this application.

Additional Information

23. Is There Any Additional Information Pertinent to this Application? ☒ YES ☐ NO

If YES, complete the rest of Question 23.

23.1. Describe: **See attached.**