AT&T Bell Laboratories
Naperville, Illinois

2400-11-01

# Certification Report for Renovation of the Concentrated Waste Storage Tank System

January 1991

WESTON
MANAGERS DESIGNERS/CONSULTANTS

Vernon Hills, Illinois

# CERTIFICATION REPORT
# FOR
# RENOVATION OF CONCENTRATED WASTE STORAGE TANK

AT&T Bell Laboratories
2000 North Naperville Road
Naperville, Illinois 60566

Submitted To:
Illinois Environmental Protection Agency
Springfield, Illinois

Prepared By:

Roy F. Weston, Inc.
Three Hawthorn Parkway
Vernon Hills, Illinois 60061

December 1990

TABLE OF CONTENTS


| Section | | Page |
|---|---|---|
| 1 | INTRODUCTION | 1-1 |
| | 1.1 Facility Description | 1-1 |
| | 1.2 CWSTS Description | 1-4 |
| | 1.2.1 Existing CWSTS | 1-4 |
| | 1.2.2 Renovated CWSTS | 1-4 |
| 2 | DESCRIPTION OF CONSTRUCTION | 2-1 |
| | 2.1 Waste Line Containment Trench Construction | 2-1 |
| | 2.2 Curbed Concrete Floor in PC Shop | 2-1 |
| | 2.3 Installation of the CWSTS | 2-2 |
| | 2.3.1 Single and Double Wall Polypropylene Piping | 2-2 |
| | 2.3.2 CWST and Lining | 2-3 |
| | 2.3.3 Leak Detection System | 2-3 |
| | 2.4 Rehabilitation of the Concrete Vault | 2-3 |
| 3 | CWSTS MODIFICATIONS | 3-1 |
| | 3.1 Non-Substantive CWSTS Modifications | 3-1 |
| | 3.2 Substantive CWSTS Modifications | 3-1 |
| 4 | CWSTS TESTS | 4-1 |
| | 4.1 CWST Interior Coating Testing | 4-1 |
| | 4.2 TraceTek Sensor Cable Test | 4-2 |
| | 4.2.1 Wire Brush Test | 4-2 |
| | 4.2.2 Damp Cloth Test | 4-2 |
| | 4.3 Double-Wall Polypropylene Pipe Test | 4-2 |
| | 4.3.1 Copper Waste Line | 4-3 |
| | 4.3.2 Main Waste Line | 4-3 |
| | 4.4 Compaction and Concrete Slump Test | 4-3 |
| | 4.4.1 Compaction Test | 4-4 |
| | 4.4.2 Concrete Slump Test | 4-4 |
| 5 | CERTIFICATION OF CONSTRUCTION | 5-1 |

LIST OF FIGURES


| Figure | | Page |
|---|---|---|
| 1-1 | Area Location Map | 1-2 |
| 1-2 | Site Location Map | 1-3 |
| 1-3 | Existing and Renovated CWSTS | 1-5 |

LIST OF APPENDICES

Appendix


| | |
|---|---|
| A | Photographs of Construction |
| B | Seamless Flooring Information |
| C | Polypropylene Pipe Information |
| D | Polypropylene Pipe Warranty |
| E | Installer's Certification |
| F | CWST Shop Drawings |
| G | CWST Warranty/Weld Inspection and Certification |
| H | TraceTek System Drawings |
| I | TraceTek Warranty |
| J | TraceTek Cable and Panel Information |
| K | Developer MSDS Sheets and Memorandum |
| L | CWSTS Waste Submittal |
| M | A&S Welding Warranty Information |
| N | Lenkote 40 Product Information |
| O | Holiday Test Witness Document |
| P | Holiday and Mil Thickness Test Results |
| Q | Soil Compaction and Concrete Tests |

# SECTION 1

# INTRODUCTION

This report is being submitted in compliance with Section II-Tank Systems of the Hazardous Waste Management RCRA Permit for the AT&T Bell Laboratories-Indian Hill Facility (LPC# 0438050004, ILD680608314, Permit Log No. 107) and presents the information required in Attachment B of the permit. The Concentrated Waste Storage Tank System (CWSTS) was constructed based on plans and specifications prepared by Camp Dresser & McKee Inc. (CDM) in Chicago, Illinois and submitted to AT&T Bell Laboratories in January 1990. This report presents documentation and a certification statement necessary to demonstrate that the construction was conducted in accordance with the approved plans and specifications.

This report contains five sections as described below:

INTRODUCTION - This section presents the scope and purpose of the project.

DESCRIPTION OF CONSTRUCTION - This section presents a description of construction activities associated with renovation of the CWSTS.

CWSTS MODIFICATIONS - This section presents a description of deviations from the original plans and specifications.

CWSTS TESTS - This section presents a description of tests conducted to verify that the renovated CWSTS was constructed and will operate as required by the Permit and plans and specifications.

CERTIFICATION - This section presents the documentation that certifies that the renovated CWSTS was constructed and will operate as required by the Permit and plans and specifications.

## 1.1 FACILITY DESCRIPTION

The AT&T Bell Laboratories Indian Hill Facility (AT&T) is located within the Office, Research and Light Industry; and Research and Development zoning areas of Naperville, DuPage County, Illinois (Figure 1-1). The facility occupies approximately 195 acres and consists of a main building, which includes modular buildings, a service building, a vaulted CWST, containerized waste storage building, and a stormwater detention basin (Figure 1-2). Surrounding land use include residential developments, forest preserves, and commercial and industrial uses.

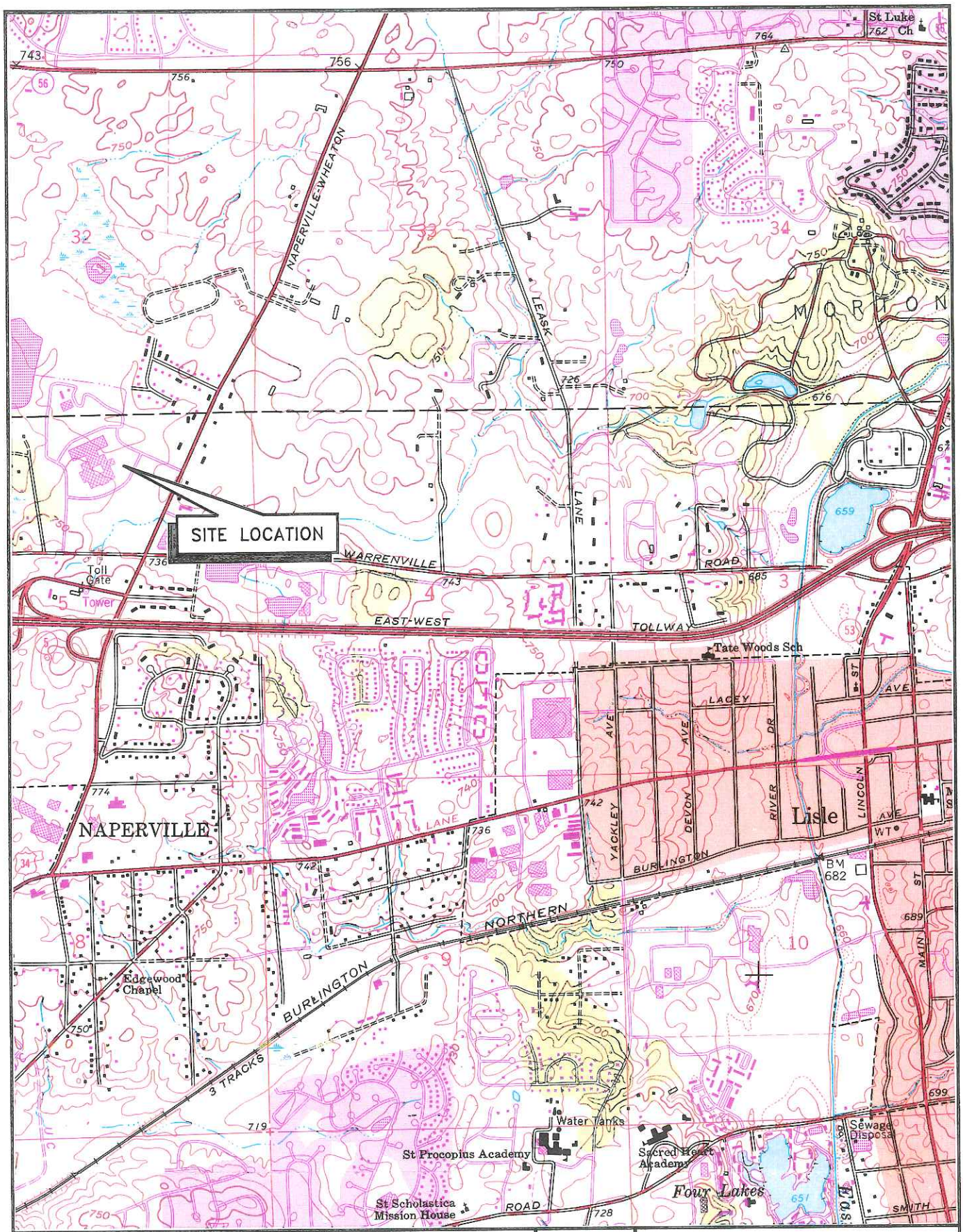


WESTON
MANAGERS DESIGNERS/CONSULTANTS

Three Hawthorn Parkway
Vernon Hills, Illinois
60061

FIGURE
1-1

AREA LOCATION MAP

AT & T BELL LABS
Naperville, Illinois

REV.

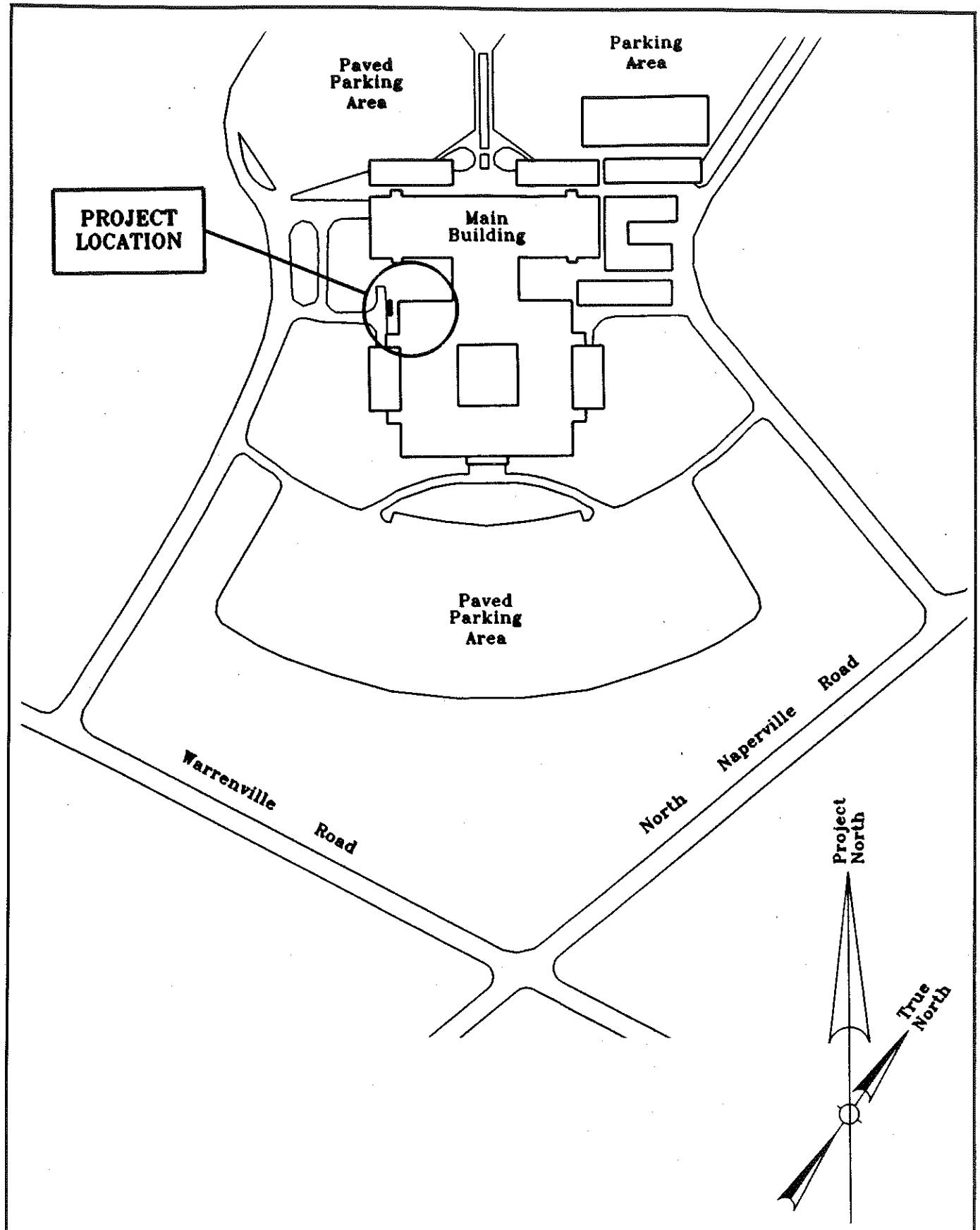


| | | | |
|---|---|---|---|
| WESTON MANAGERS DESIGNERS/CONSULTANTS | Three Hawthorn Parkway<br>Vernon Hills, Illinois<br>60061 | FIGURE<br>1–2 | SITE LOCATION MAP<br>AT & T BELL LABS<br>Naperville, Illinois |

REV.

The AT&T facility is engaged in communications-related research and development as a primary activity. Additional activities include both office support and service functions. The facility currently employs approximately 4,100 personnel.

## 1.2 CWSTS DESCRIPTION

The CWSTS is used to collect and store wastewater generated during printed circuit (PC) board fabrication in the PC Shop and from the Thin Films Coating Laboratory. The major volume of waste managed by the CWSTS met the RCRA definition of corrosity when introduced into the system. However, through dilution and neutralization, the contents of the CWST exhibit the characteristics of an Illinois special waste. By volume, most of the corrosive waste discharged into the CWST is spent caustic developer baths, spent acid ethchant, spent ammonia etchant, electroless copper baths, acid baths, and rinse water from the PC Shop.

### 1.2.1 Existing CWSTS

The existing CWSTS consists of two separate waste lines (Figure 1-3). A 4-inch single-wall polypropylene pipeline conveying waste, via a gravity feed system, from the Section 2 Thin Films Coating Laboratory and PC Shop to the CWST. A non-operational waste line, also a 4-inch single-wall polypropylene pipeline, conveyed similar waste from a now defunct laboratory in Section 6 to the CWST. The existing CWST is a single-wall 6,000 gallon steel tank with interior and exterior protective coatings. The vault is constructed of high density concrete with 12-inch walls and floors. The vault floor is sloped where leakage can be collected. The vault is equipped with a sump, emergency shower, and stairwell.

### 1.2.2 Renovated CWSTS

The renovated CWSTS consists of a 6,000 gallon two compartment double-wall steel tank with an interior chemical resistant coating, a rehabilitated CWST vault, two double-wall polypropylene waste lines, a leak detection system, and a concrete trench that contains the double-wall waste lines. The waste lines originate in the Section 2 Thin Films Coating Laboratory and the PC Shop (Figure 1-3). The renovated CWSTS allows for waste segregation with a 4 x 8 inch double-wall polypropylene pipe (main waste line) conveying PC Shop waste, via a gravity feed system, to the 4,000 gallon compartment of the new CWST. A 3 x 6 inch double-wall polypropylene pipe (copper waste line), also via a gravity feed system, conveys the recoverable copper waste from the Thin Films Coating Laboratory to the 2,000 gallon compartment of the new CWST. Renovation of the CWSTS also included decontaminating, removing, and disposing of the existing CWSTS.

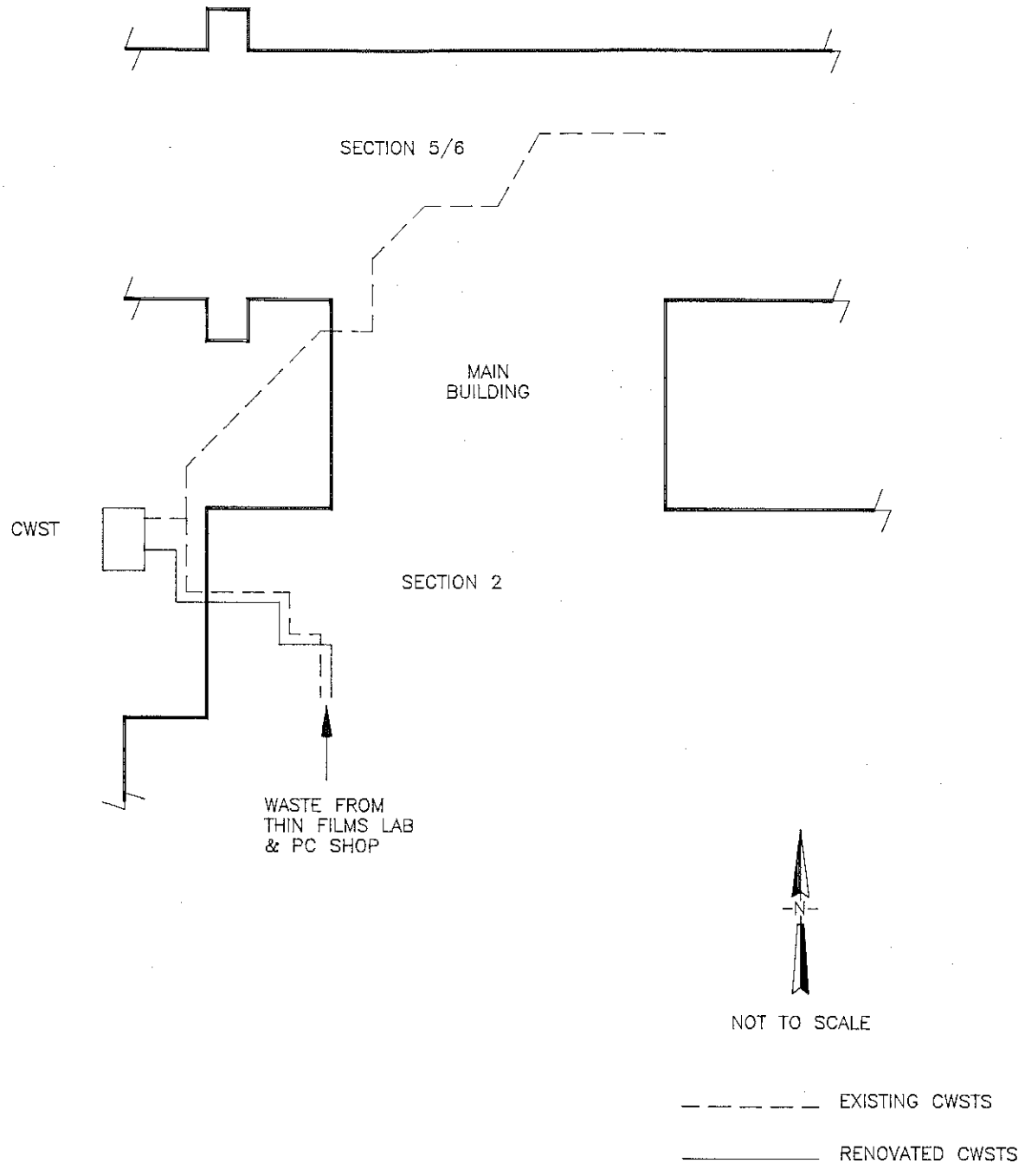


WESTON
MANAGERS DESIGNERS/CONSULTANTS

Three Hawthorn Parkway
Vernon Hills, Illinois
60061

FIGURE
1-3

EXISTING & RENOVATED CWSTS

AT&T BELL LABORATORIES
Naperville, Illinois

REV.

49290

# SECTION 2

# DESCRIPTION OF CONSTRUCTION

This section presents a description of construction activities involved in renovation of the CWSTS at the AT&T facility. Construction activities were conducted by the General Construction Contractor (GCC) Amazing Construction Company, Inc. and its subcontractors based on plans and specifications prepared by CDM and submitted to AT&T in January 1990. The major construction tasks include:

- Waste line containment trench construction in the PC Shop and Mechanical Room No. 2.
- Installation of a new curbed concrete floor in the PC Shop.
- Installation of the new CWSTS.
- Rehabilitation of the existing concrete vault.

All construction activities performed by the GCC and its subcontractors were completed within an eight month period from 3 April to 15 December 1990. Photographic documentation of construction activities is provided in Appendix A. As-built drawings are also provided in the report and referenced by drawing number as necessary throughout this report.

## 2.1 WASTE LINE CONTAINMENT TRENCH CONSTRUCTION

Concrete trenches were constructed in the PC Shop and Mechanical Room No. 2. Flooring was cut and materials were excavated to the appropriate depths as outlined in the plans and specifications. The waste line containment trench in the PC Shop begins outside the service core that contained the riser servicing the Thin Films Coating Laboratory, and extends to a utility tunnel below Mechanical Room No. 2. The Mechanical Room No. 2 waste line containment trench extends from the utility tunnel for approximately 62 feet north and then west for approximately 44 feet. See Drawings S-2 and M-2 for waste line containment layout. All material, equipment, and workmanship were in accordance with sections 02200 and 03300 of the specifications, except for deviations from the specifications discussed in Section 3.

## 2.2 CURBED CONCRETE FLOOR IN PC SHOP

A new curbed concrete floor with seamless flooring was installed in the PC Shop (see Drawings S-1 and M-4 for PC shop floor detail). The surface of the new concrete floor was acid etched with 10%

muriatic acid to remove any bond inhibiting material and any other foreign matter. The seamless flooring was applied to the concrete to a 70-120 mils dry film thickness including scrim fabric reinforcing (see Appendix B for information on seamless flooring). To achieve a slip-proof texture, silica sand was applied to the wet coating and a final light coating was applied to achieve the required texture. The new concrete floor was installed in accordance with applicable parts of sections 03300 and 09727 of the specifications except for deviations from the specifications discussed in Section 3.

## 2.3 INSTALLATION OF CWSTS

The new CWSTS consisted of double-wall polypropylene piping, a 6,000 gallon two compartment double-wall steel storage tank with chemical resistant coating, and a leak detection system.

### 2.3.1 Single and Double-Wall Polypropylene Piping

The double-wall polypropylene piping system including fittings, restraint couplings, and support devices, was installed from the Thin Films Coating Laboratory to the new CWST (see Drawing M-1). The piping system consisted of a 4 x 8 inch double-wall polypropylene pipe (main waste line), a 3 x 6 inch double-wall polypropylene pipe (copper waste line), 2-inch single-wall polypropylene vent piping, and equipment connections to the system.

The main waste line begins in the service core outside the Thin Films Coating Laboratory on the third floor of Section 2. A 2 x 4 inch double wall polypropylene pipe connects to a (3 x 2) x (4 x 6) inch reducer from the Thin Films Coating Laboratory at the second floor of the service core. The 3 x 6 inch double-wall polypropylene pipe passes through the first floor service core and enters the PC Shop where it is connected with a (4 x 3) x (8 x 6) inch reducer to 4 x 8 inch double-wall polypropylene pipe. See Drawing M-3 for floor drain, laterals, and vent pipe connections.

The copper waste line is connected to PC Shop equipment via a 2 inch single-wall polypropylene piping system in the PC Shop. The copper waste line parallels the main waste line through the PC Shop, utility tunnel, and Mechanical Room No. 2 waste line containment trench to the new CWST. See Drawing No. M-4 for details concerning vent piping, laterals, and valve connections.

The single and double-wall polypropylene piping system was installed in accordance with applicable parts of sections 15073, 02200, 11312, 13600, 13215, 15100, and 15140 of the specifications except for deviations from specifications discussed in Section 3. See Section 4 for details concerning testing of the waste piping system. Product information on the polypropylene piping is presented in Appendix C. The pipe warranty is included in

Appendix D and the installer's certification is provided in Appendix E.

### 2.3.2 CWST and Lining

Installation of the CWST included all flanged fittings and vent piping for the new CWST and piping system. The CWST shop drawings are provided in Appendix F. The new CWST was lowered into the rehabilitated concrete vault and was bolted to the vault foundation. See Drawing No. M-5 for piping and foundation detail. The new CWST was installed in accordance to applicable parts of Sections 13215, 02050, 13600, and 15073 of the specifications, except for deviations from the specifications discussed in Section 3. The CWST warranty and weld inspection and certification is provided in Appendix G. See Section 4.1 for details concerning the application and testing of the CWST interior coating.

### 2.3.3 Leak Detection System

A TraceTek Leak Detection and Location System (TraceTek) was installed in the double-wall polypropylene piping system and CWST. The TraceTek system consisted of a zone leak detection sensor cable, an electronic alarm and locating module, a graphic display map of the leak detection system, and all auxiliary fittings, cable anchoring and appurtenances required to detect and locate the leakage of water, acids, and alkalies from the inner pipe of the double-wall polypropylene pipe and CWST. The TraceTek system drawings are provided in Appendix H. The TraceTek was installed in accordance with the manufacturer's instructions and section 13600 of the specifications except for deviations from the original layout of the TraceTek cable as discussed in Section 3. The TraceTek warranty and cable and panel information is provided in Appendices I and J, respectively.

## 2.4 REHABILITATION OF THE EXISTING CONCRETE VAULT

Rehabilitation of the existing concrete vault involved installation of new backwash, vent, fill drain, and sump piping, new pre-cast concrete roof slabs, new concrete riser for the new vent hatch, pipe penetrations, and water-proofing. See Drawing M-5 for concrete vault details. Water-proofing membrane was applied to the edge of the concrete vault prior to pre-cast concrete roof slab installation. Water-proofing was applied to the vault from 18 inches below grade to the top of the vault, over the pre-cast concrete roof, and around slab protrusions. Rehabilitation of the concrete vault was performed in accordance to applicable sections of the specifications except for deviations from the specifications discussed in Section 3.

# SECTION 3

# SYSTEM MODIFICATIONS

This section presents a description of CWSTS modifications or deviations from the approved plans and specifications. The modifications are discussed in the order of appearance on the as-built drawings provided in this report and are presented in two categories:

- Non-substantive modifications to the CWSTS.
- Substantive modifications to the CWSTS.

Non-substantive modifications are deviations bearing no direct affect on the operation of the CWSTS. Substantive modifications are deviations affecting the operation of the CWSTS that require a discussion to justify the deviation from the specifications.

## 3.1 NON-SUBSTANTIVE CWSTS MODIFICATIONS

Based upon the number and the degree of affect on the CWSTS, a discussion is not present on the non-substantive CWSTS modifications. Several examples of non-substantive CWSTS modifications are provided below:

- Revised dimensions of sawcuts for trenches in Mechanical Room No. 2 (Drawing S-1).
- Added removability to one precast waste line containment trench panel (Drawing S-2).
- Revised direction of waste line clean-outs in the waste line containment trench (Drawing M-1).
- Revised routing of existing CWST piping (Drawing M-2).
- Revised floor drain detail in PC Shop (Drawing M-3).
- Clarified backfill material and added geotextile fabric (Drawing M-4).
- Revised pre-cast vault covers and manhole risers (Drawing M-5).

## 3.2 SUBSTANTIVE CWSTS MODIFICATIONS

The modifications presented below are deviations considered by the certifying licensed Illinois Professional Engineer to be deviations from the approved plans and specifications that require an explanation. The deviations are listed and discussed in the same sequence to the as-built drawings.

- Revised PC Shop slab material from polymer concrete to pyrament (Drawing S-1).

SikaTop 122 polymer concrete was originally specified for the new PC Shop floor. However, after repeated attempts, AT&T was unable to obtain verification of compatibility with the CWSTS waste. The pyrament concrete, however, met all compatibility requirements, shorter curing time, and the concrete was more economical than the SikaTop 122. In an effort to install the new floor within an acceptable timeframe, AT&T used the pyrament product.

- Eliminated coating on waste line containment trench floor and walls (Drawing S-2).

Section 09723 of the specifications required the trench floor and walls be coated with a seamless epoxy coating. The CWSTS has double-wall polypropylene piping, a TraceTek leak detection system, and concrete trenches to contain or detect a release. Therefore, trench liner would be a duplication of effort in a system already equipped with secondary containment and a leak detection system.

- Eliminated piping from developer to 4 x 8 inch double-wall polypropylene piping in tunnel (Drawings M-1, M-2, M-3, and M-4).

The piping from the developer to the main waste line was eliminated based upon the waste generated by the developers. A review of the Material Safety Data Sheets (MSDS) indicated that the developer waste could be discharged and vented via the sanitary sewer. As a result, the piping was eliminated and the vent piping and single wall polypropylene piping was revised to discharge to the sanitary sewer line. See Appendix K for MSDS sheets and justification memorandum.

- Add laterals for future piping and/or equipment connections (Drawing M-3).

Laterals were added for future connections to the main waste line in the service core outside the Thin Films Coating Laboratory, the service core on the second floor, and the service core outside the PC Shop. AT&T will meet all notification requirements of the RCRA Part B Permit prior to any future connections to the CWSTS.

- Revised leak detection cables to CWST (Drawing M-5).

The TraceTek leak detection cable was originally specified to enter the interstitial space of each CWST compartment via a one-inch single-wall polypropylene pipe from the CWST fitting to a double-wall vent fitting of the waste lines. The TraceTek sensor cable was revised to enter the interstitial space at each end of the new CWST. The revisions will prevent moisture from the CWST waste compartments contacting the sensor cable and set off the alarm. If

the revision was not made, the TraceTek cable system could always be in alarm mode.

- CWST interior coating revised to Lenkote 40 mil thickness (Drawing M-5).

The original CWST coating, upon review of the CWSTS waste material, was deemed unacceptable by the CWST manufacturer (A&S Welding). See Appendix L for CWSTS waste submittal to A&S Welding. The coating was only applicable for short time durations; therefore, A&S Welding would not warranty the CWST. See Appendix M for A&S Welding warranty information. A&S Welding recommended Lenkote 40 which is applied by Industrial Coatings Company. The Lenkote 40 product is chemical resistive to the CWSTS waste and was substituted for the original coating. Information on the Lenkote 40 coating is provided in Appendix N.

- Revised buoyancy straps from four to two straps (Drawing M-5).

The saddle and the new CWST are welded into one unit and bolted to the foundation of the concrete vault. The buoyancy straps were reduced to two due to redundancy in CWST restraint.

The certifying licensed Illinois Professional Engineer has reviewed the above deviation from the original plans and specifications and it is his opinion that the deviations are acceptable.

# SECTION 4

# CWSTS TESTS

This section presents a description of tests performed on the CWSTS. Tests were performed in accordance to applicable sections of the specifications. Tests are listed and discussed below:

- CWST Interior Coating Testing
- TraceTek Sensor Cable Test
- Double-wall Polypropylene Piping Test
- Soil Compaction and Concrete Tests

## 4.1 CWST INTERIOR COATING TESTING

On 9 August 1990, Reliable Linings and Coating Company (RELIABLE) was subcontracted by AT&T to perform a holiday (leak) test on the CWST interior coating. To prevent any destruction of the coating, a wet sponge tester was used to check for holidays or leaks in the coating. According to RELIABLE, all inside walls of the nozzles showed holidays or leaks. The holiday areas were marked with orange marker.

On 23 August 1990, Industrial Coating Company (INDUSTRIAL) recoated the CWST interior. A Tinker & Rasor Tester was used to check for holidays.

On 24 August 1990, Corrpro Coatings, Inc. (CORRPRO) was subcontracted by AT&T to conduct holiday testing and non-destructive thickness inspections of the interior CWST coating. Thickness measurements indicated insufficient coating thickness at the following locations:

- Bottom two nozzles of the north bulkhead of the 4,000-gallon compartment.
- North bulkhead of the 4,000-gallon compartment.
- South bulkhead of the 2,000-gallon compartment.
- Bottom of the stiffner on the south bulkhead of the 2,000-gallon compartment.
- Bottom two nozzles of the south bulkhead of the 2,000-gallon compartment.

On 4 and 11 September 1990, CORRPRO again found deficiencies in the coating thickness. From 24 to 26 September 1990, in the presence of the certifying licensed Illinois Professional Engineer's designated representative, CORRPRO and INDUSTRIAL remediated all holidays and coating thickness deficiencies in the CWST interior

coating. A holiday test witness document is provided in Appendix O. CORRPRO's holiday and mil thickness test results are provided in Appendix P.

## 4.2 TRACETEK SENSOR CABLE TEST

The certifying licensed Illinois Professional Engineer witnessed testing of the TraceTek sensor cable. Test methods and locations are presented below:

- Wire brush test at a cleanout in Mechanical Room No. 2.
- Wire brush test at a cleanout in the utility tunnel.
- Damp cloth test at a cleanout in the utility tunnel.

### 4.2.1 Wire Brush Test

The TraceTek sensor cable was tested with a wire brush at a cleanout in Mechanical Room No. 2 and the utility tunnel. The wire brush was clamped onto the sensor cable causing interruptions in the system. The interruptions were recorded by a TraceTek monitor temporarily connected to the cable. The TraceTek monitor indicated the distances to each interruption in the system. Distances were recorded and verified by the certifying licensed Illinois Professional Engineer.

### 4.2.2 Damp Cloth Test

A damp cloth was used to test the cable's response to moisture. The damp cloth was placed on the sensor cable at a cleanout in the utility tunnel. The TraceTek monitor displayed the distance to the damp cloth. The distance was recorded and verified by the certifying licensed Illinois Professional Engineer.

## 4.3 DOUBLE-WALL POLYPROPYLENE PIPE TEST

The double-wall polypropylene pipe test was conducted in the presence of the certifying licensed Illinois Professional Engineer. In accordance with section 15073 part 3.03 of the specifications, separate test methods were performed on the inner and outer piping. The test procedure is described below:

- The outer pipe (carrier pipe) test procedure was to purge the system with nitrogen and maintain a pressure of 5 psi for two hours.

- The inner pipe test procedure was to maintain a 10 foot head of water in the waste lines for two hours.

### 4.3.1 Copper Waste Line

On 1 October 1990, the inner pipe of the copper waste line was filled with water to a 10 foot head and left overnight. On 2 October 1990, no leaks were detected by the TraceTek sensor cable and no reduction in water volume was observed.

On 2 October 1990, the outer pipe of the copper waste line was filled with nitrogen. The system was unable to maintain the 5 psi pressure. On 26 October 1990, after the leaking section of pipe was found and repaired, the outer pipe was again purged with nitrogen and maintained the 5 psi pressure for two hours.

### 4.3.2 Main Waste Line

On 1 October 1990, the GCC attempted to fill the inner pipe of the main waste line with water. The GCC was unable to achieve the required 10 foot head. Several leaks were detected in the waste line. On 26 October 1990, after the leaking section of pipe was found and repaired, the inner pipe was again filled with water at the required 10 foot head for the specified 2 hour period. No leaks were detected by the TraceTek sensor cable and no reduction in water volume was observed. Also on 26 October 1990, the outer pipe was filled with nitrogen but failed to maintain the required 5 psi pressure for 2 hours.

On 29 October 1990, after the leaking section of pipe was found and repaired, the outer pipe of the main waste line was again filled with nitrogen and maintained a 5 psi pressure for two hours.

All double-wall polypropylene pipe testing was witnessed and approved by the certifying licensed Illinois Professional Engineer.

## 4.4 SOIL COMPACTION AND CONCRETE TESTS

As required in Sections 02200 Part 1.04 and 03300 Part 3.05 of the specifications, soil compaction and concrete tests were performed in the following areas.

- Soil Compaction test of outdoor trench from Mechanical Room No. 2 to CWST concrete vault.
- Concrete slump tests on the floor slab in the PC Shop, walls in PC Shop, PC Shop trench, and Mechanical Room No. 2 waste line containment trench.

All tests were performed by Testing Service Corporation of Carol Stream, Illinois. Soil compaction and concrete tests results are provided in Appendix Q.

### 4.4.1 Soil Compaction Tests

From 25-26 July 1990, in-place density tests (compaction test) were performed on the CA-6 gray crushed limestone outside Mechanical Room No. 2 to the CWSTS concrete vault. Compaction results between 83.0 and 89.3 percent were obtained. Based on the ASTM D1557-78 (modified) laboratory procedure, the percent compaction values did not meet the specification requirement of 95 percent. Based on the stability of the trench bottom, however, the CA-6 was considered by Testing Service Corp. to have adequate compaction for the work to proceed, and was accepted and approved by the ASHI/AMERICA representative, for compacted bedding supporting their polypropylene pipe.

From 8-12 November 1990, compaction tests were performed on the FA-6 (limestone screening) material and brown silty clay used for trench backfill outside Mechanical Room No. 2 and the CWST concrete vault. The limestone screenings were placed around the pipe. The remainder of the trench was backfilled with the brown silty clay. Based on the ASTM D-1557 (modified) laboratory procedure the percent compaction met the specification requirement of 95 percent. In a few areas, the fill was accepted based on water content, dry unit weight, and stability of the material. Included in Appendix Q is the laboratory compaction curve.

### 4.4.2 Concrete Tests

Concrete tests were performed on the floor slab, walls, and waste line containment trench in the PC Shop and in the Mechanical Room No. 2 waste line containment. Tests were performed according to ASTM C-39 with 6 x 12 inch concrete cylinders. Concrete cylinders met or exceeded the 28 day, 4,000 psi compression strength test.

# SECTION 5

## CERTIFICATION OF CONSTRUCTION

Construction certification of the CWSTS system is based on construction observations on an as necessary basis and witnessing required certification testing by a licensed Illinois Professional Engineer and/or his designated representative. The certifying licensed Illinois Professional Engineer for the project was James Michael Burton, P.E. (062-043086) and his designated representatives were Willy Pua and Steven R. Bosko. The attached certification statement provides formal acknowledgement that it is the opinion of the certifying licensed Illinois Professional Engineer that the renovated CWSTS was constructed in accordance with the Part B Permit.

ILD068608314

# CERTIFICATION

This statement is to be completed by both the responsible officer and the registered professional engineer upon completion of construction in accordance with 35 IAC Section 702.126. Submit one copy of the certification with original signatures and two additional copies. Forward these certification statements and any information required by the permit to the following address:

Illinois Environmental Protection Agency
Division of Land Pollution Control -- #24
Permit Section
2200 Churchill Road
P.O. Box 19276
Springfield, Illinois 62794-9276

FACILITY NAME: AT&T Bell Laboratories Indian Hill Facility
IEPA SITE CODE: LPC #0438050004
U.S. EPA ID NO.: ILD068608314
PART B PERMIT LOG #107
PERMIT (OR MODIFICATION) ISSUANCE DATE:
PERMIT CONDITION NO. REQUIRING CERTIFICATION:

The Renovated Concentrated Waste Storage Tank System has been constructed in accordance with the specifications in the Part B. Documentation that the construction was in accordance with the permit is contained in the enclosed report. I certify under penalty of law that this document and all attachments were prepared under my direction or supervision in accordance with a system designed to assure that qualified personnel properly gather and evaluate the information submitted. Based on my inquiry of the person or persons who manage the system, or those persons directly responsible for gathering the information, the information submitted is, to the best of my knowledge and belief, true, accurate, and complete. I am aware that there are significant penalties for submitting false information, including the possibility of fine and imprisonment for knowing violations.

Signature of Owner/Operator

Name and Title

James Michael Burton
Signature of Registered P.E.

James Michael Burton 062-043086
Name of Registered P.E. and
Illinois Registration Number

January 8, 1991
Date

JAMES MICHAEL BURTON
062-043086
REGISTERED
PROFESSIONAL
ENGINEER
OF
ILLINOIS

# APPENDIX A

# PHOTOGRAPHS OF CONSTRUCTION

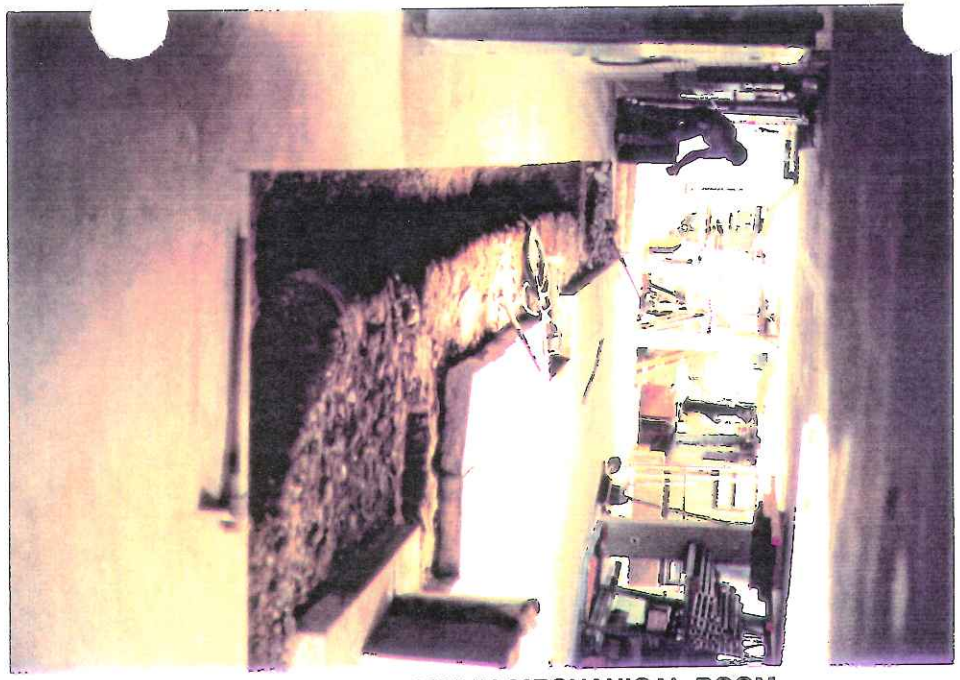

1) TRENCH EXCAVATION IN MECHANICAL ROOM

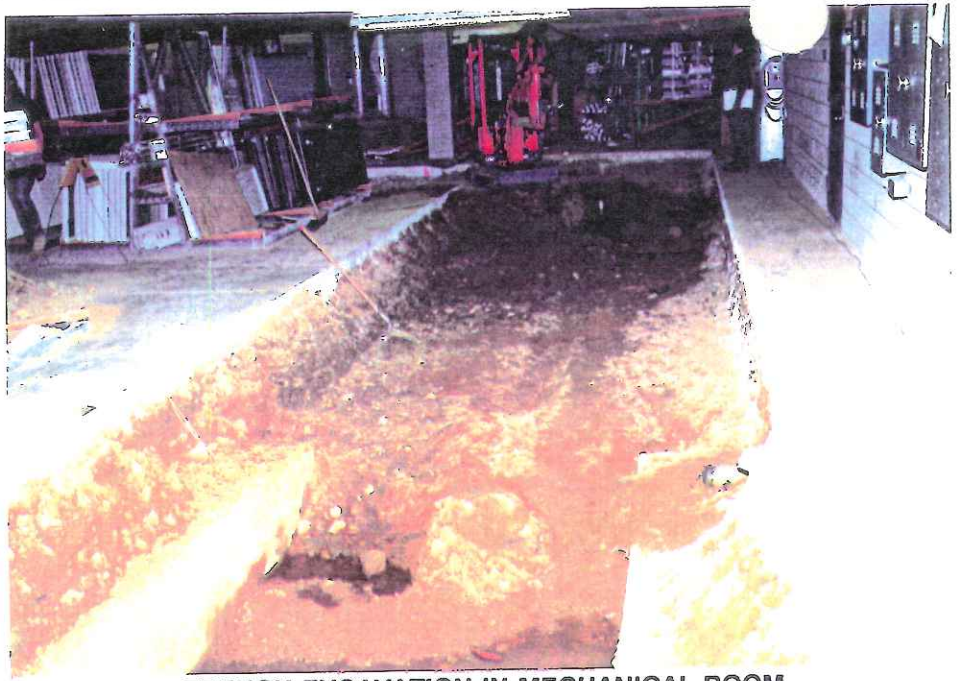

2) TRENCH EXCAVATION IN MECHANICAL ROOM

3) TRENCH EXCAVATION IN MECHANICAL ROOM NEAR THE OUTDOOR ACCESS

4) TRENCH IN MECHANICAL ROOM

5) TRENCH EXCAVATION OUTSIDE THE MECHANICAL ROOM TO THE TANK

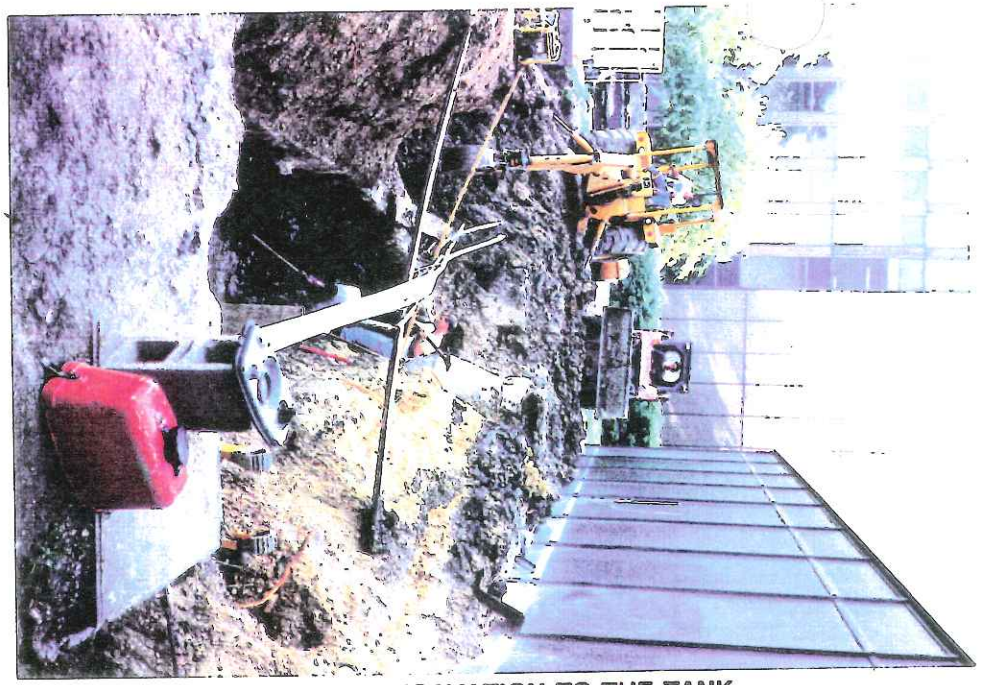

6) TRENCH EXCAVATION TO THE TANK

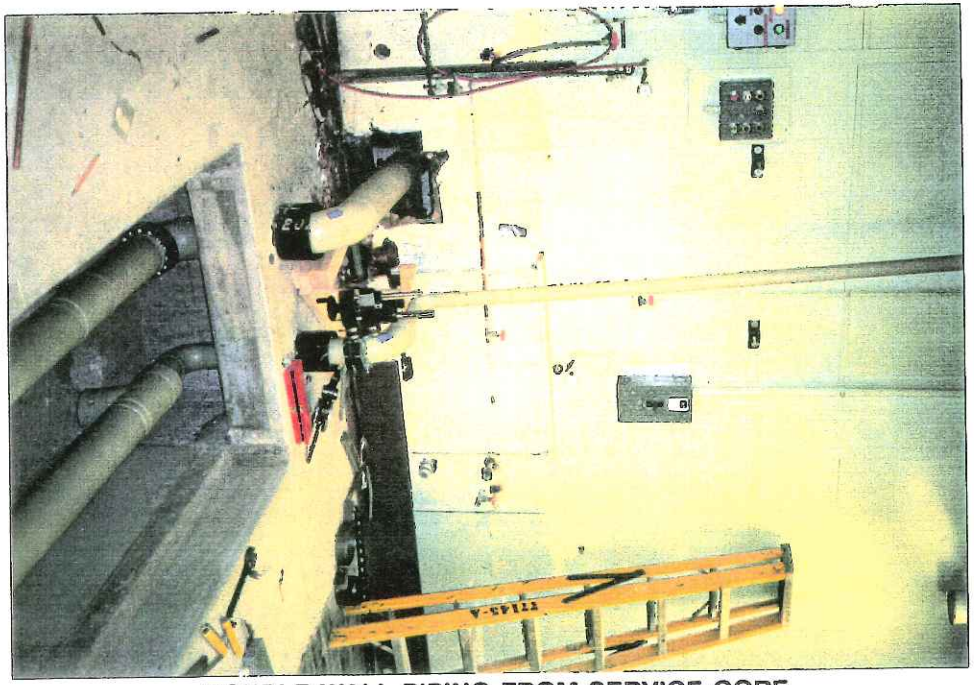

7) DOUBLE WALL PIPING FROM SERVICE CORE TO CONCRETE TRENCH IN THE PC SHOP

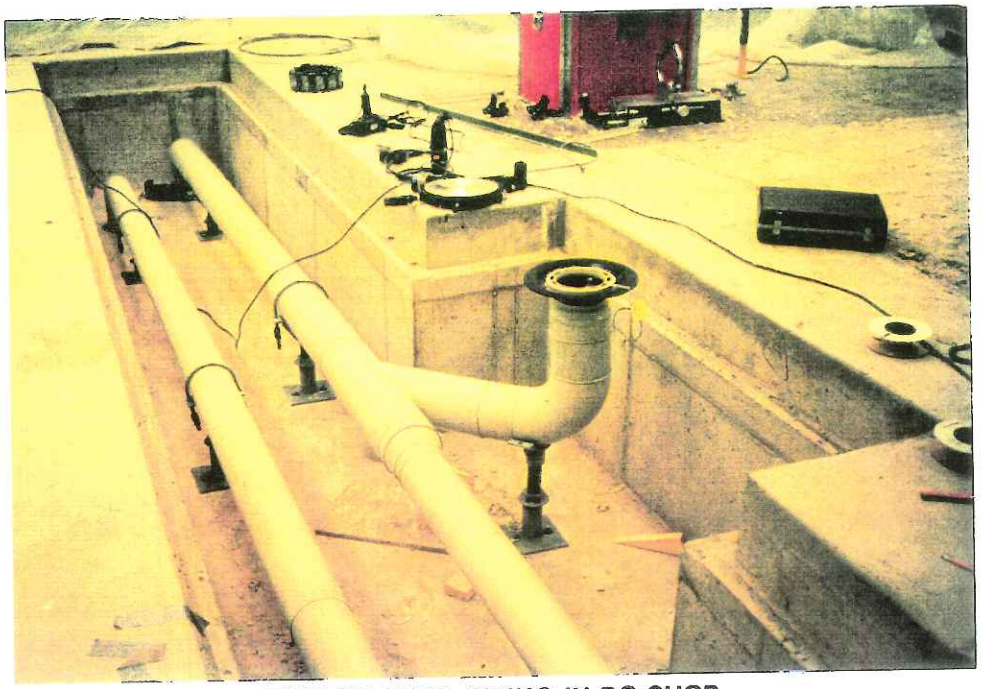

8) DOUBLE WALL PIPING IN PC SHOP

9) DOUBLE WALL PIPING IN CONCRETE TRENCH IN THE MECHANICAL ROOM

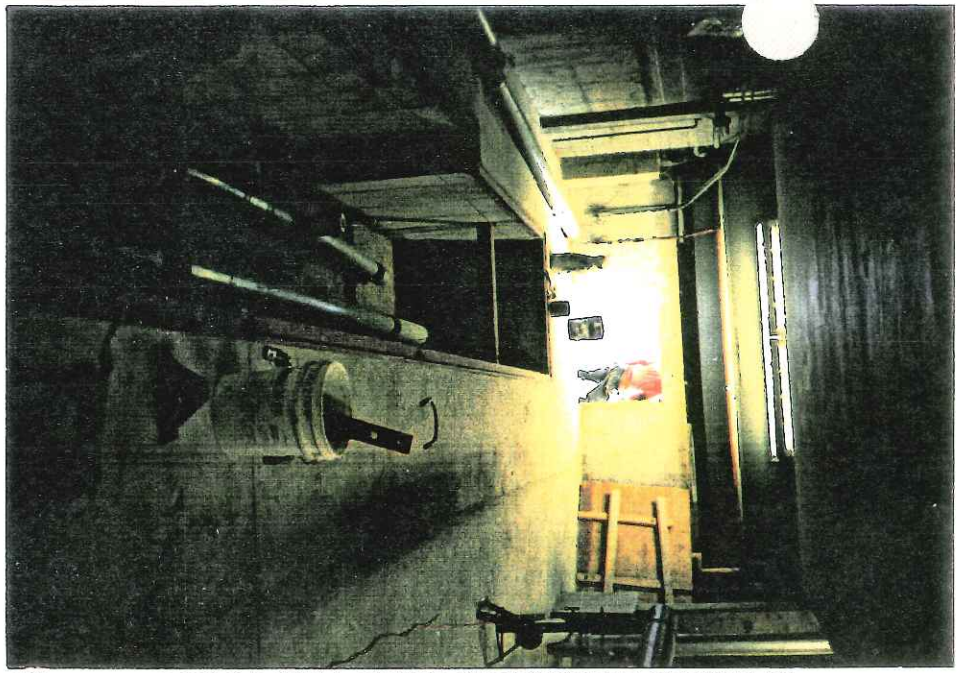

10) DOUBLE WALL PIPING IN CONCRETE TRENCH IN MECHANICAL ROOM NEAR OUTSIDE TRENCH

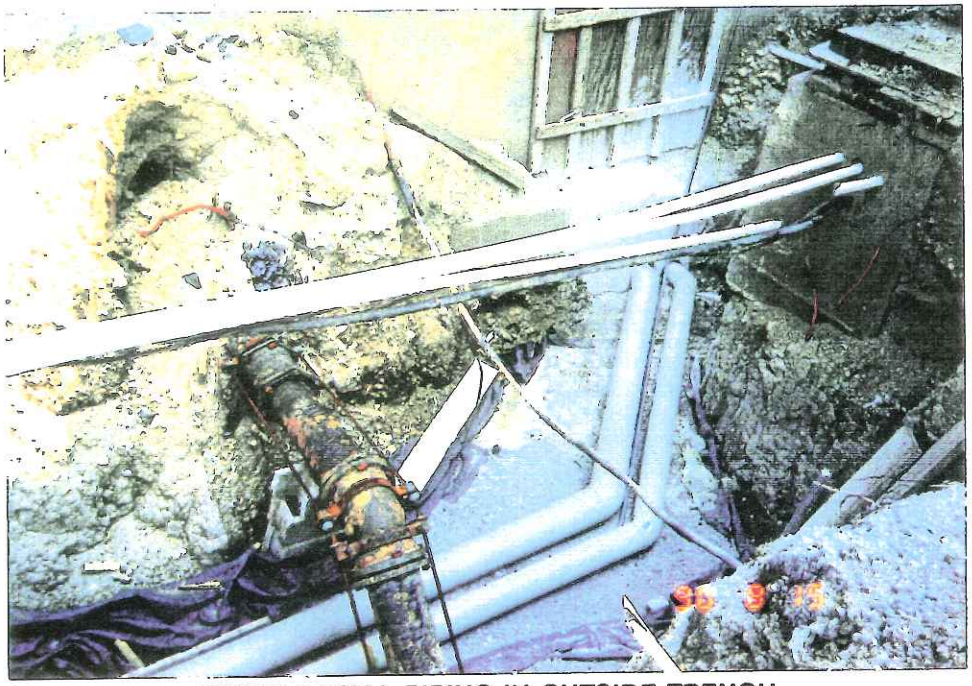

11) DOUBLE WALL PIPING IN OUTSIDE TRENCH

12) DOUBLE WALL PIPING IN OUTSIDE TRENCH TO CONCRETE VAULT

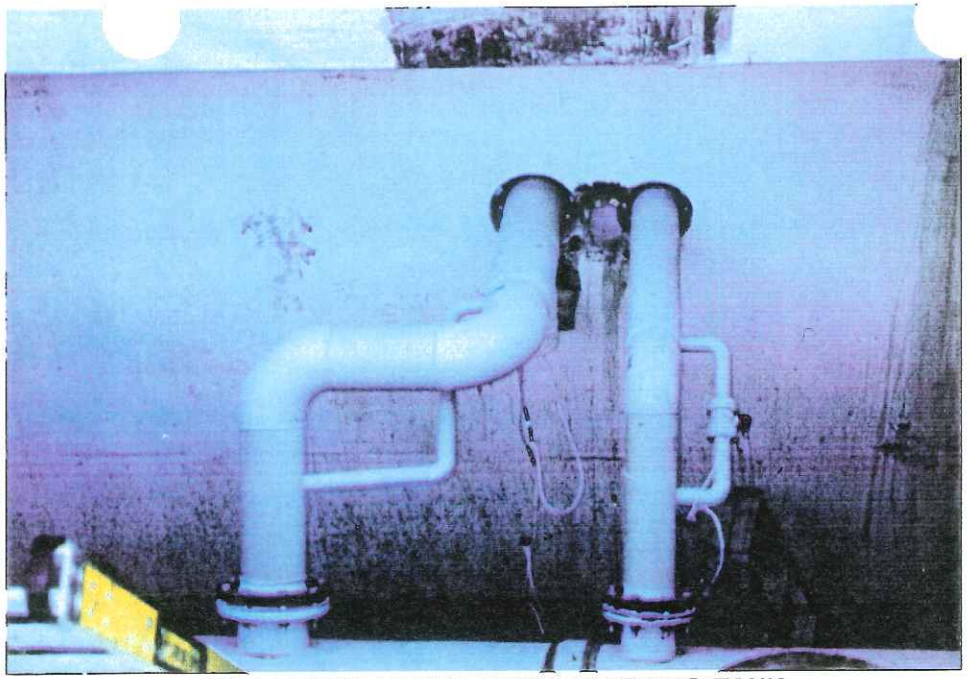

13) DOUBLE WALL PIPING CONNECTION TO TANK

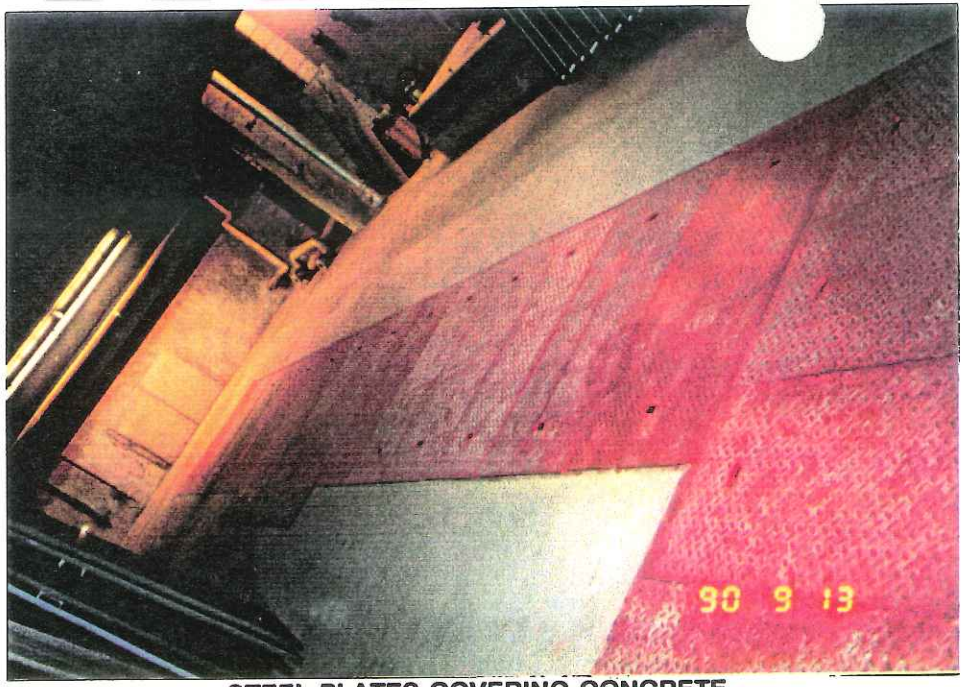


14) STEEL PLATES COVERING CONCRETE TRENCH IN MECHANICAL ROOM

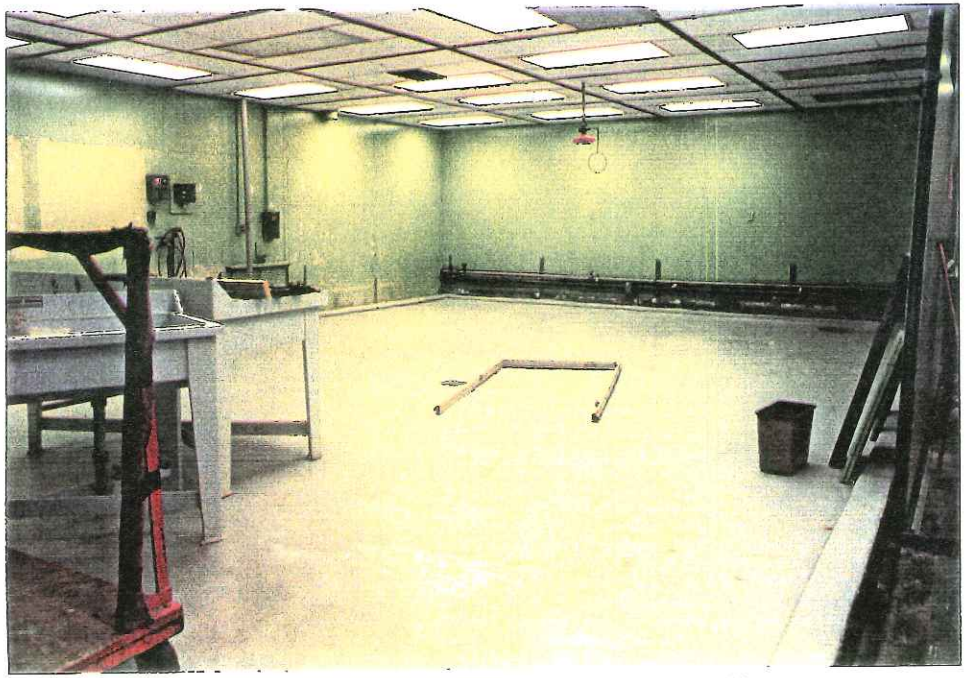

15) NEW POLYMER CONCRETE FLOOR WITH SEAMLESS FLOORING IN THE PC SHOP

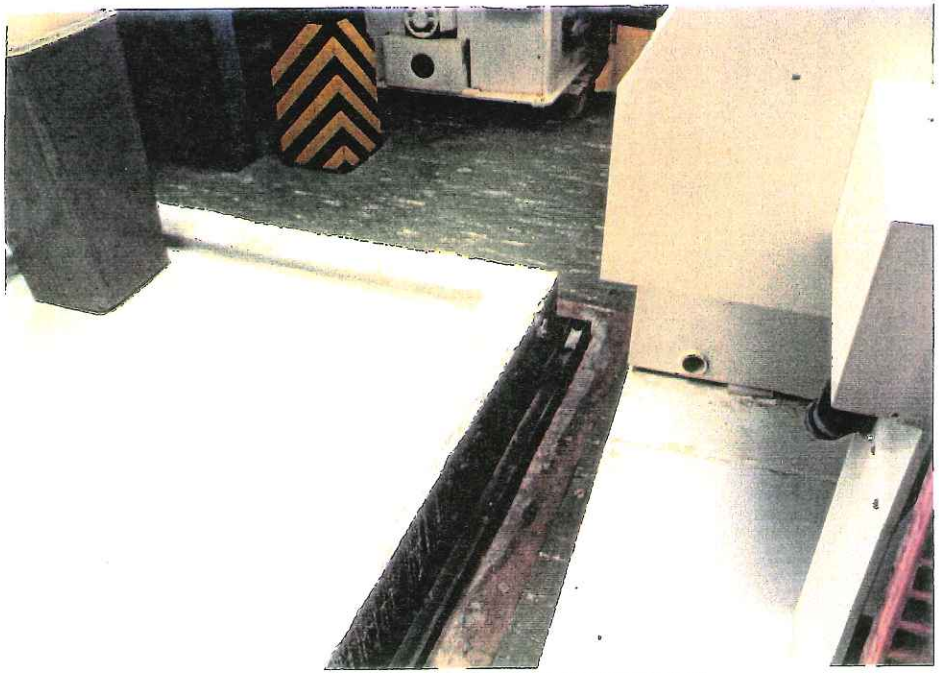

16) EDGE OF NEW POLYMER CONCRETE FLOOR IN THE PC SHOP

17) NEW DOUBLE WALL TWO COMPARTMENT STEEL TANK

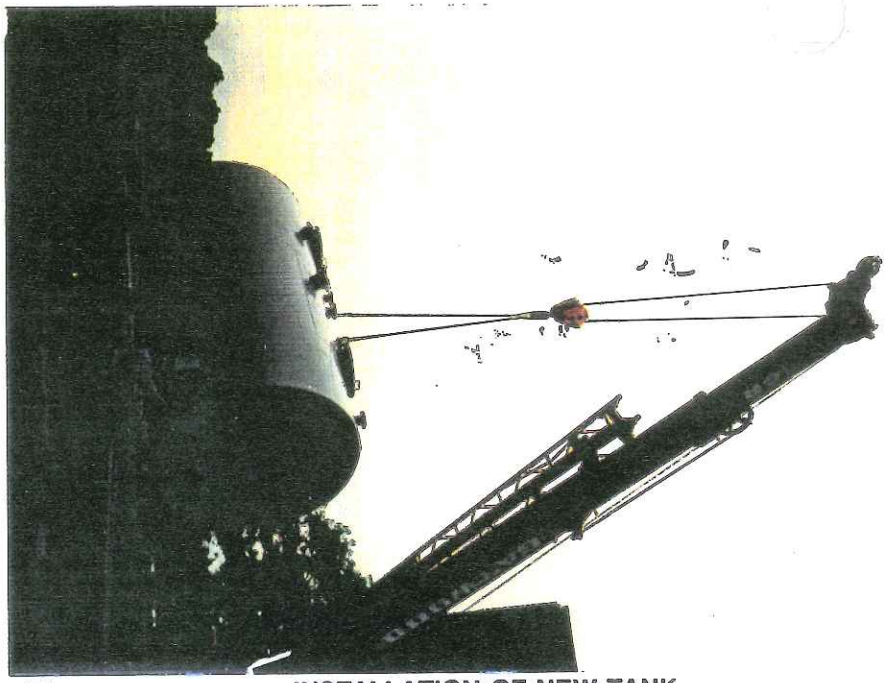

18) INSTALLATION OF NEW TANK

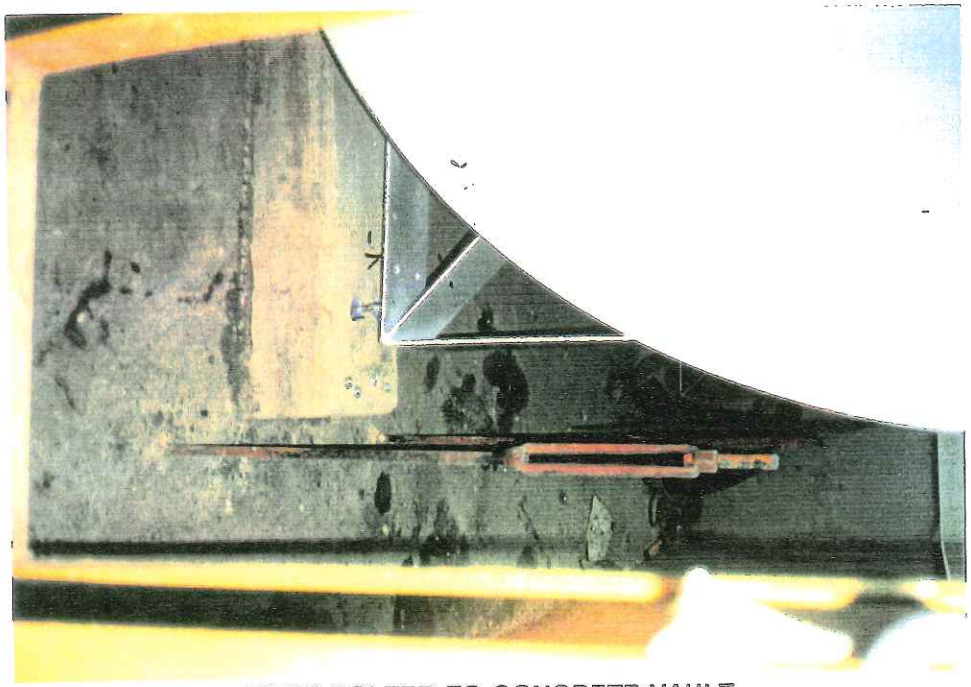

19) TANK BOLTED TO CONCRETE VAULT

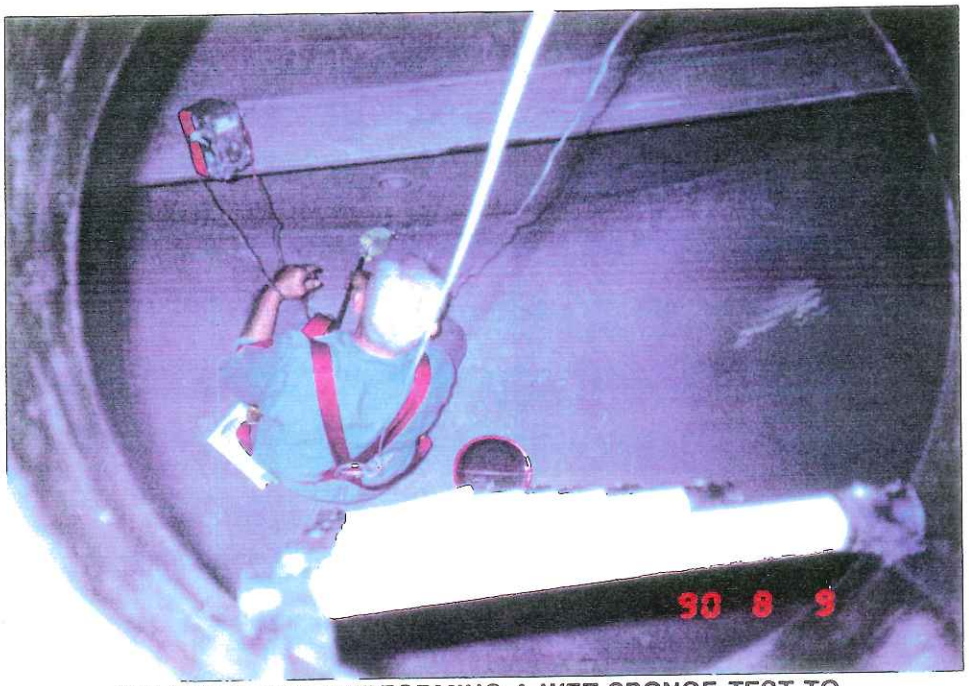


20) RELIABLE, INC. PERFORMING A WET SPONGE TEST TO TO DETECT HOLIDAYS IN THE TANK LINING

21) RELIABLE, INC. TESTING THE MANWAY COVER FOR HOLIDAYS

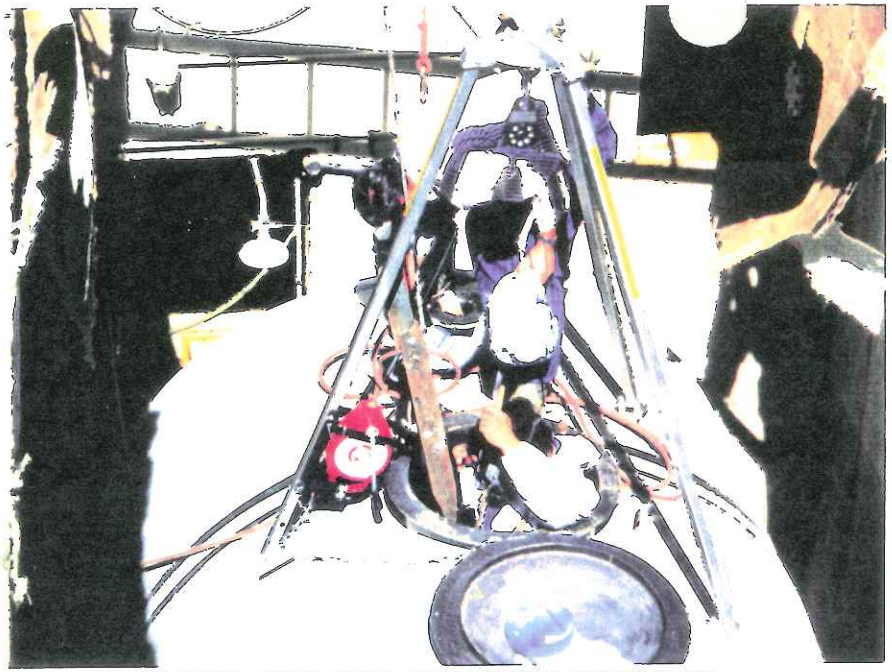

22) INDUSTRIAL COATINGS RECOATING DEFECTIVE AREAS ON THE TANK LINING

23) CORRPRO, INC. TESTING FOR HOLIDAYS WITH A TINKER & RASOR HOLIDAY TESTER

24) CORRPRO, INC. INSPECTING ACCESS PORTS FOR HOLIDAYS

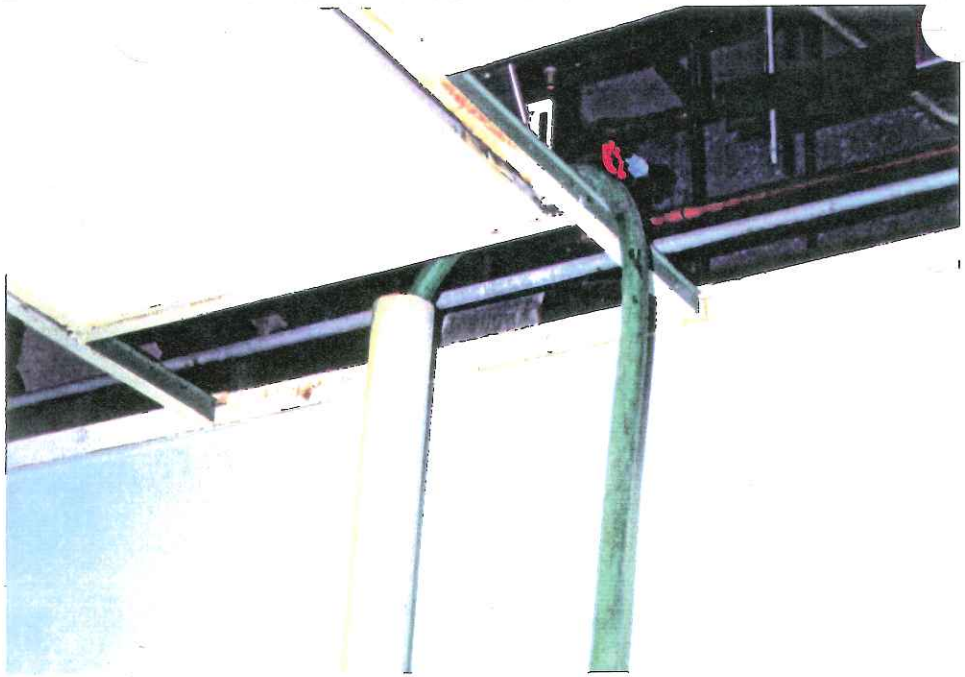

25) FILLING 3x6 INCH PIPE WITH WATER FOR LEAK TEST

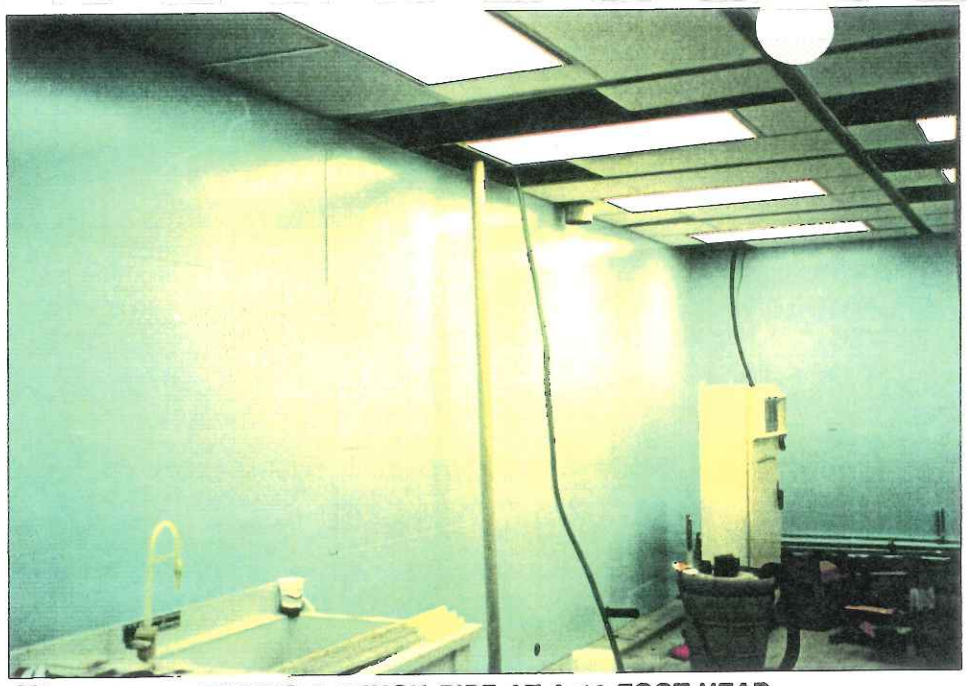

26) FILLING 3x6 INCH PIPE AT A 10 FOOT HEAD

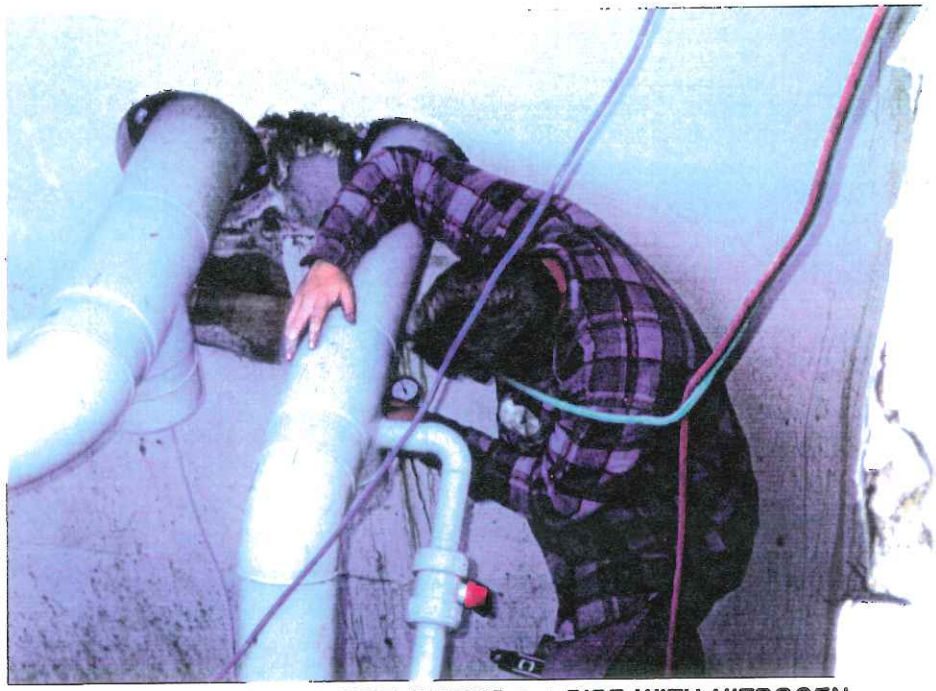

27) FILLING OUTER PIPE OF THE 3x6 PIPE WITH NITROGEN

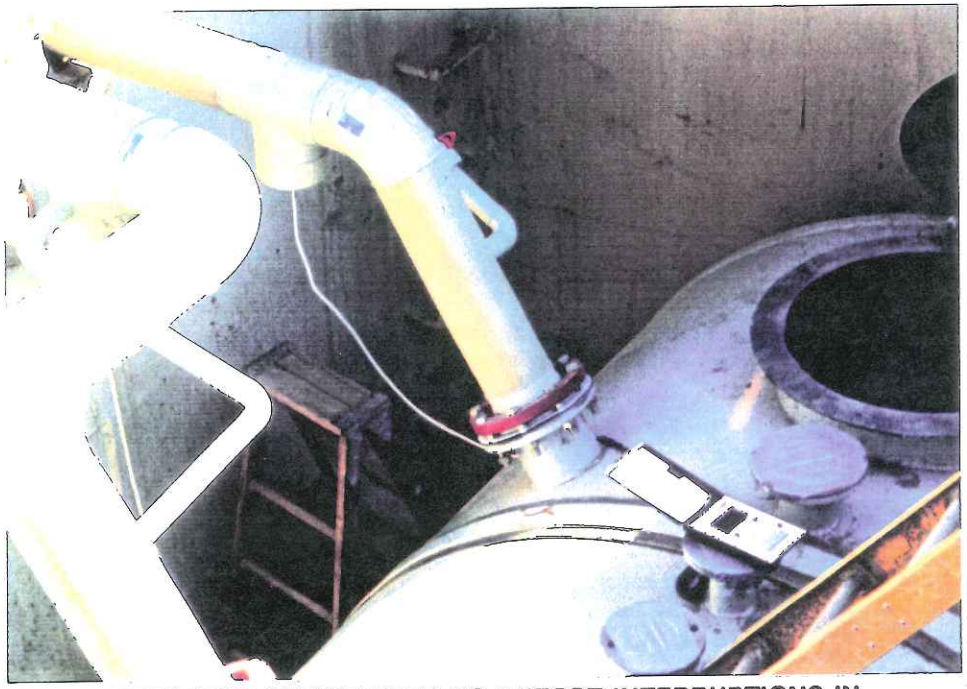

28) TRACETEK DEVICE USED TO DETECT INTERRUPTIONS IN THE CABLE DURING LEAK DETECTION TESTS

29) BACKFILLING THE OUTSIDE PIPE TRENCH WITH COMPACTED FA-6 GRAVEL, GEOTEXTILE FABRIC & CLAY

30) SEALANT APPLIED TO THE CONCRETE VAULT

31) CONCRETE PANELS IN PLACE

32) INSTALLATION OF THE CONCRETE PANELS

# APPENDIX B

# SEAMLESS FLOORING INFORMATION

**TECHNICAL BULLETIN**
February 1988

# SEMSTONE® 140-CT

## Epoxy Floor Coating - Cold Temperature Formulation

## DESCRIPTION AND USES:

SEMSTONE 140-CT is a self-priming, self-leveling epoxy floor coating system that produces a high gloss finish and is specially formulated to be applied at temperatures down to 35°F. Its special formulation also allows it to be applied over wet concrete.

It can be optionally aggregate filled to economically extend its coverage.

SEMSTONE 140-CT is a two component system that possesses the following characteristics in common with all members of Sentry's 140 family of products:

- excellent resistance to:
  - chemical attack;
  - thermal shock;
  - wear and impact.
- superior bonding qualities;
- high cohesive strength, coupled with the flexibility necessary to resist cracking;
- low permeability;
- low odor;
- 100 % solids.

SEMSTONE 140-CT is used to protect concrete surfaces exposed to corrosive chemical environments when application at cold temperatures is required.

It may also be used at higher temperatures when very rapid curing is needed.

Example uses include: winter flooring projects, cold room floor coatings, quick cure floor topping applications, quick cure repair grout.

## PACKAGING/COVERAGE:

SEMSTONE 140-CT is available in 1 gallon and 5 gallon units. Each unit consists of a premeasured Part A component and a premeasured Part B component.

Coverage rates are effected by the condition of the surface being coated. The following are theoretical coverage rates: 32 sq. ft. per gallon at 50 mils; 12.8 sq. ft. per gallon at 125 mils.

Coverage can be increased by up to 100% when extended with silica aggregate. (See paragraph 5 of the application guidelines under MIXING AND APPLICATION.)

Application thickness depends upon expected service conditions. Consult Sentry Polymers or your local representative for specific recommendations.

Sentry POLYMERS
P. O. BOX 2076A
5500 E. HWY 332
FREEPORT, TX 77541
409-233-0312
713-393-1666 (HOUSTON)
800-231-2544 (EXCEPT TX & AK)

## TYPICAL PROPERTIES – WET:

| | |
|---|---|
| Solids, by Volume | 100% |
| Weight per Mixed Gallon | 9.3 lbs |
| Pot Life @ 35°F | 30 - 40 minutes (significantly less at elevated temperatures) |
| Cure Time @ 35°F: | |
| Foot Traffic | 8 hrs. |
| Light Vehicular Traffic | 16 hrs. |
| Chemical Service | 36 hrs. |
| Primer | Not Required |
| Nonflammable | |

## TYPICAL PROPERTIES – CURED:

| | | |
|---|---|---|
| Color | | Light Gray (selected other colors available) |
| Hardness | ASTM D - 2240 Shore D | 70 - 75 |
| Compressive Strength | ASTM C - 579 | 14,000 psi |
| Tensile Strength | ASTM D - 638 | 5,000 psi |
| Tensile Elongation | ASTM D - 638 | 6% |
| Flexural Strength | ASTM D - 790 | 11,000 psi |
| Flexural Modulus of Elasticity | ASTM C - 722 | Complies with Epoxy Type B |
| Abrasion Resistance | ASTM D - 1044 | 56 mg (CS17 wheels) |
| Water Vapor Transmission | ASTM E - 96 | |
| | WVT | 0.0120 grain per hr $ft^2$ |
| | Permeability | 0.0042 perm. -in. |

## RELATED AND ANCILLARY PRODUCTS:

SEMSTONE 140 Epoxy Floor Topping
SEMSTONE 140 - S Epoxy Coating and Lining
SEMSTONE 140 - SL Epoxy Self-Leveling Floor Coating
SEMSTONE 300 Epoxy Polymer Concrete
SEMSTONE 500 Epoxy Putty
SEM-CRETE Rapid Hardening Underlayment Mortar
SEMSTONE Scrim

Refer to separate technical bulletin on each product for uses, application instructions, etc.

## STORAGE AND SHELF LIFE:

Keep SEMSTONE 140-CT components tightly sealed in their original containers until ready for use. Store unopened at 35° - 75°F, out of direct sunlight. Properly stored, SEMSTONE 140-CT has a minimum shelf life of one year.

Refer to batch number on label for date of manufacture.

# CHEMICAL RESISTANCE GUIDE

This guide is intended as an aid in determining the potential usefulness of SEMSTONE 140-CT as a protective barrier against chemical exposure. Each application should be evaluated according to its particular circumstances and conditions.

KEY: 1 = Suitable for constant immersion
2 = Suitable for shorter term containment and continual spillage
3 = Suitable for intermittent spills when followed promptly with water flushing
NR = Not recommended
C = Consult Sentry Polymers

| | RATING | | RATING | | RATING |
|---|---|---|---|---|---|
| Acetic Acid, 10% | 2 | Corn Oil | 1 | Nitric Acid, 5% | 3 |
| Acetic Acid, 30% | 3 | Crude Oil, Sour | 1 | Nitric Acid, 30% | NR |
| Acetic Acid, Glacial | 3 | Crude Oil, Sweet | 1 | Nitric Acid, 50% | NR |
| Acetone | NR | Cyclohexane | 3 | Nitric Acid/Sulfuric Acid | NR |
| Acrylic Acid, up to 25% | NR | Cyclohexanol | 3 | Nitrobenzene | NR |
| Acrylonitrile | NR | Cyclohexanone | 3 | n-Octyl Alcohol | 1 |
| Alum | | Dichlorobenzene | NR | Oils | 1 |
| (Aluminum Potassium Sulfate) | 1 | Diesel Fuel | 1 | Oleum | NR |
| Aluminum Chloride | 1 | Diethyl Benzene | NR | Oleic Acid | 3 |
| Aluminum Fluoride | 1 | Ethyl Alcohol | 2 | Oxalic Acid | 3 |
| Aluminum Hydroxide | 1 | Ethyl Benzene | NR | Perchloroethylene | 3 |
| Aluminum Nitrate | 1 | Ethyl Chloride | NR | Perchloric Acid | NR |
| Aluminum Sulfate | 1 | Ethylene Dichloride | NR | Phenol | NR |
| Ammonia | 2 | Ethylene Glycol | 1 | Phosphoric Acid, 50% | 1 |
| Ammonium Bisulfite | 1 | Fatty Acids | 1 | Phosphoric Acid, 85% | 2 |
| Ammonium Chloride | 1 | Ferric Chloride | 1 | Phosphorous Acid | 3 |
| Ammonium Hydroxide | 1 | Ferric Nitrate | 1 | Potassium Carbonate | 1 |
| Ammonium Nitrate | 1 | Ferric Sulfate | 1 | Potassium Chloride | 1 |
| Ammonium Sulfate | 1 | Ferrous Chloride | 1 | Potassium Dichromate | 2 |
| n-Amyl Alcohol | NR | Fluosilicic Acid | 2,C | Potassium Hydroxide | 1 |
| Aniline | NR | Formaldehyde | 1 | Potassium Nitrate | 1 |
| Barium Chloride | 1 | Formic Acid | 3 | Propionic Acid | 2 |
| Barium Hydroxide | 1 | Fuel Oil | 1 | Silver Nitrate | 1 |
| Barium Sulfate | 1 | Gasoline | 1 | Sodium Acetate | 1 |
| Barium Sulfide | 1 | Glycerine | 1 | Sodium Bicarbonate | 1 |
| Benzene | 2 | Heptane | 1 | Sodium Bisulfate | 1 |
| Benzene Sulfonic Acid | 1 | Hexane | 1 | Sodium Bisulfite | 1 |
| Benzoic Acid | 1 | Hydrobromic Acid | 2 | Sodium Carbonate | 1 |
| Black Liquor, Pulp Mill | 1 | Hydrochloric Acid, 15% | 1 | Sodium Chloride | 1 |
| Bleach Liquor, Pulp Mill | - | Hydrochloric Acid, 37% | 2 | Sodium Chlorite | NR |
| Boric Acid | 1 | Hydrofluoric Acid | 2,C | Sodium Hydroxide, 10% | 1 |
| Brine | 1 | Hydrogen Peroxide | 2 | Sodium Hydroxide, 50% | 1 |
| Bromine, Liquid | NR | Hydrogen Sulfide | 1 | Sodium Hypochlorite | 2,C |
| Bromine Gas (Dry & Wet) | NR | Isopropyl Alcohol | 1 | Sodium Sulfate | 1 |
| n-Butyl Alcohol | 2 | Jet Fuel | 1 | Sodium Sulfide | 1 |
| Butyl Cellosolve Solvent | 3 | Kerosene | 1 | Stannic Chloride | 1 |
| n-Butyric Acid | NR | Lactic Acid | 2 | Stannous Chloride | 1 |
| Cadmium Chloride | 1 | Lauryl Chloride | 1 | Stearic Acid | 1 |
| Calcium Chloride | 1 | Lead Acetate | 1 | Styrene | 3 |
| Calcium Hydroxide | 1 | Linseed Oil | 2 | Sugar/Sucrose | 1 |
| Calcium Hypochlorite | 2,C | Lithium Bromide | 1 | Sulfur Dioxide | 2 |
| Calcium Nitrate | 1 | Lithium Chloride | 1 | Sulfuric Acid, 10% | 1 |
| Calcium Sulfate | 1 | Lithium Hypochlorite | 2,C | Sulfuric Acid, 50% | 1 |
| Calcium Sulfite | 1 | Lithium Hydroxide | 1 | Sulfuric Acid, 98% | NR |
| Carbon Dioxide Gas | 1 | Magnesium Bisulfite | 1 | Tall Oil | 2 |
| Carbon Dissulfide | NR | Magnesium Carbonate | 1 | Tannic Acid | 1 |
| Carbon Tetrachloride | NR | Magnesium Hydroxide | 1 | Tartaric Acid | 1 |
| Chlorine Dioxide | 3 | Magnesium Sulfate | 1 | Toluene | 2 |
| Chlorine Gas (Dry & Wet) | 3 | Maleic Acid | 2 | Toluene Sulfonic Acid | 1 |
| Chlorine Water | 2 | Mercuric Chloride | 1 | Trichloracetic Acid | 3 |
| Chlorobenzene | NR | Mercurous Chloride | 1 | Trichloroethylene | 3 |
| Chloroform | NR | Methyl Alcohol | 2 | Trisodium Phosphate | 1 |
| Chromic Acid, 15% | 3 | Methyl Chloride | NR | Urea | 1 |
| Chromic Acid, 50% | 3 | Methylene Chloride | NR | Water, Deionized | 1 |
| Citric Acid | 1 | Methyl Ethyl Ketone | NR | Water, Demineralized | 1 |
| Copper Chloride | 1 | Mineral Spirits | 2 | Water, Distilled | 1 |
| Copper Cyanide | 1 | Monochloroacetic Acid | 3 | Xylene | 2 |
| Copper Nitrate | 1 | Muriatic Acid | 1 | Zinc Chloride | 1 |
| Copper Sulfate | 1 | Naphtha | 1 | Zinc Sulfate | 1 |
| | | Naphthalene | 1 | | |

# APPLICATION GUIDELINES

## IMPORTANT NOTE

This material has a short pot life. Plan your application accordingly.

## SURFACE PREPARATION - GENERAL

1. Surfaces must be free of dirt, dust, oil, grease, chemicals and other contaminents immediately prior to applying each coat of SEMSTONE 140-CT.

2. For the initial coat, the concrete can be wet.

   However, for recoats, all surfaces must be dry.

## SURFACE PREPARATION OF CONCRETE

1. New concrete generally should be cured a minimum of 28 days.

   NOTE: Check with Sentry Polymers for recommendations regarding concrete cured less than 28 days.

2. Concrete must be structurally sound and must not contain any accelerators or curing compounds.

3. Remove all oil and grease.

4. Remove all surface laitance and expose sound concrete.

   We recommend abrasive blasting to do this. However, other methods, such as acid etching and neutralizing, may be used.

5. In general, any existing coating should be completely removed.

   In certain instances this may not be necessary, but consult with Sentry Polymers first.

   Always remove coatings which have failed due to lack of adhesion or thermal shock.

   .ocate all expansion joints, control joints, floor drains, equipment base plates and mid-floor termination points. Handle them as per Sentry's Construction Details Sheet No. 87-1.

7. Honeycombs or any form voids in vertical surfaces must be filled.

8. If the concrete is wet:

   a. Flush thoroughly with clear water. Steam or hot water is recommended, if available.

   b. Remove all standing water.

## SURFACE PREPARATION OF INCIDENTAL STEEL

Equipment base plates, etc. to be coated along with the concrete should be abrasive blasted to a near white metal finish with a 1 - 2 mil anchor profile. (Ref.SSPC-SP-10)

## MASKING

Mask surfaces that are not to be coated. This material is difficult to remove, once applied.

## APPLICATION EQUIPMENT

SEMSTONE 140-CT may be applied using a notched trowel, serrated squeegee, or roller.

## MIXING AND APPLICATION

1. The components must be individually agitated immediately prior to use.

   Part A - Blend each Part A component to a uniform consistency in its individual container, using a Jiffy type mixer.

   Part B - Stir each Part B component to a uniform color in its individual container.

2. Pour the entire contents of Part B into the container holding Part A, and mix thoroughly for two minutes using a Jiffy type mixer.

3. The pot life of the mixture will be approximately 30-40 minutes @ 35°F; significantly less time at elevated temperatures.

The longer the material is in the bucket after mixing, the shorter its pot life will be. Therefore, immediately pour the entire contents of mixed material onto the prepared surface and spread to desired thickness using a notched trowel, serrated squeegee, or long nap roller.

4. When working a large or congested area, it may be desirable for applicator to wear spiked shoes.

5. SEMSTONE 140-CT may be extended by adding silica sand. This is especially useful when coating rough or mildly eroded concrete.

   a. Do not add sand to SEMSTONE 140-CT unless your coating thickness will be at least 75 mils.

   b. Use only clean, dry, bagged 20/40 mesh round silica sand.

   c. Pour half the mixed SEMSTONE 140-CT into another clean, 5 gallon bucket.

   d. Slowly add sand to each bucket while blending with a Jiffy type mixer. Do both buckets right away.

   e. You may add up to 3 parts, by weight, of sand to 1 part, by weight, of SEMSTONE 140-CT.

      At 3 to 1 you get a mixture of grout-like consistency.

      At 2 to 1, you will obtain a still fluid mixture and extend coverage by 100%.

6. SEMSTONE 140-CT is self-leveling. When used on an area that has a pitch or slope, use a 2 to 1 silica sand mixture (see 5 paragraph above) in order to keep the material from sliding.

7. SEMSTONE 140-CT may tend to run off vertical surfaces. Multiple coats will probably be required to obtain a coating free of pin holes. We recommend a minimum of three coats. Allow each coat to cure tack free before applying the next coat. Prepare the surface between coats in accordance with paragraph 9 under MIXING AND APPLICATION.

   DO NOT USE AGGREGATE ON VERTICAL SURFACES.

8. To obtain a nonskid surface:

   a. Allow the initial coat to cure 8 hours.

   b. Wash the initial coat with soap and water, rinse it thoroughly with clear water, and dry it.

   c. Apply a thin second coat.

   d. Before this second coat reaches its initial set, broadcast your grit media onto the surface.

9. Prepare surfaces for intercoat adhesion as follows:

   a. Allow SEMSTONE 140-CT to cure until jelled before recoating.

   b. If the surface cures firm to the touch, but less than 24 hours, it must be washed with soap and water, rinsed and dried before recoating.

   c. Surfaces cured beyond 24 hours must be washed with soap and water, rinsed, dried and lightly sanded or abrasive blasted.

   d. Important: while SEMSTONE 140-CT can be applied over wet concrete, for recoating, the surface must be dry.

## CLEANUP

Before it jells, SEMSTONE 140-CT may be cleaned from tools and equipment using hot, soapy water.

After SEMSTONE 140-CT jells, Xylene or MEK will be required. Chlorinated solvents may be used if flammable solvents are not allowed.

## SAFETY PRECAUTIONS

FOR INDUSTRIAL USE ONLY.

Avoid contact with eyes and skin; do not ingest or inhale.

When working with SEMSTONE 140-CT, always wear chemical goggles, rubber gloves, and appropriate work clothing.

When working in a confined area, make provision for forced ventilation.

Prolonged or repeated exposure to SEMSTONE 140-CT may cause skin irritation or allergic reactions.

Refer to material safety data sheets regarding individual components.

NOTICE TO CUSTOMERS

We believe the information in this technical bulletin to be accurate; it is offered in good faith for your benefit. However, no guarantee of its accuracy is given or implied. Since the conditions of use are beyond our control, we suggest you make your own evaluation of these recommendations and suggestions. We guarantee our products to conform to our manufacturing standards. We assume no responsibility for coverage, performance or injuries resulting from use. Liability, if any, is limited to replacement of our products.

sentry POLYMERS

P. O. BOX 2076A
5500 E. HWY 332
FREEPORT, TX 77541

409-233-0312
713-393-1666 (HOUSTON)
800-231-2544 (EXCEPT TX & AK)

November 21, 1989

Mr. Frank Girdwain
AT&T Bell Laboratories
2000 N. Naperville Road
Naperville, IL 60566-7033

Dear Frank:

There are three qualified applicators of Sentry Polymer's SEMSTONE products in your area. They are:

Mr. Nels Carlsen
Quality Maintainence
Route 1
Chase Road
Montegue, MI 49437
616-894-8713

Mr. Nick Conversa
Midway Construction
1030 E. 87th Street
Chicago, IL 60619
312-374-2800

Installer

Mr. J. L. Manta
J. L. Manta
7757 S. Chicago Avenue
Chicago, IL 60619
312-731-5300

Please call me at 1-800-231-2544 if you have any questions.

Sincerely,

Paul Kennington
Regional Sales Manager

P.O. BOX 2076-A / FREEPORT, TEXAS 77541 / (409) 233-0312

# APPENDIX C

# POLYPROPYLENE PIPE INFORMATION

Section I

# CHEMICAL PERFORMANCE

Overview of Materials
General Nature
Material Selection
Chemical Attack Mechanisms
Testing Procedures
Chemical Resistance Charts

## OVERVIEW OF MATERIALS

Proline and Super Proline are superior materials in terms of resistance to environmental corrosive agents. Both materials are resistant to a wide variety of organic and inorganic chemicals up to high concentrations and temperatures. Proline is a member of the polyolefin family of plastics. It is an isotactic copolymer polypropylene with excellent chemical inertness, resistance to moisture flow, and complete resistance to attack by ambient moisture. It is not affected by most inorganic chemicals, organic solvents below 180°F, and detergents. It is affected, however, by the halogens, fuming nitric and sulfuric acids, and other highly oxidizing environments. Aromatic and chlorinated hydrocarbons tend to cause swelling and softening at elevated temperatures as well.

Super Proline is a member of the inert fluoropolymer family. It is made from polyvinylidene fluoride (PVDF), with even greater chemical inertness and resistance to moisture flow as compared to Proline. Super Proline resists many corrosives, including inorganic substances such as mineral acids with very low pH's up to operating temperatures of 280°F. It shows excellent resistance to the halogens, strong oxidants and very aggressive ultra-pure water solutions. It is affected by strong baseous solutions, members of the amine family, and is not recommended for highly polar solvents such as ketones or esters.

Asahi/America has very detailed corrosion resistance charts available for these specific products which include over 600 corrosive solutions at a variety of concentrations and operating temperatures. **At all times refer to the specific chemical resistance guide appropriate to each product.** In addition to the printed corrosion resistance information, extensive computerized databases are available to assist in determining the performance of a material with respect to a given corrosive agent. Most important of all, test coupons (tensile bars) for Proline and Super Proline are available for use in arranging tests under actual operating conditions or tests which involve contact with the solution under applied stress. Asahi/America's printed chemical resistance information serves as an excellent source of qualitative information with respect to chemical performance. For a more quantitative analysis of various corrosive agents with respect to design properties of Proline and Super Proline, it is always recommended to conduct testing.

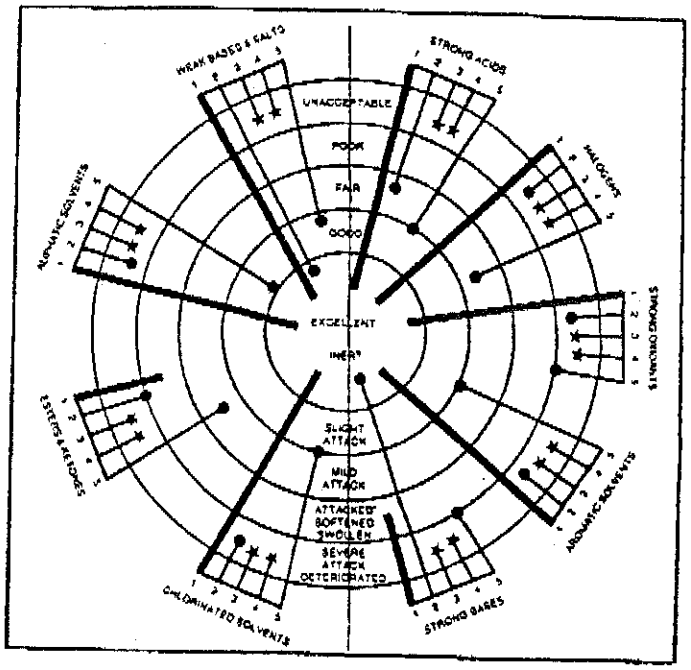


**Figure I-1: General Comparison of Chemical Performance of Various Plastic Piping Materials**

1. SUPER PROLINE (PVDF)
2. PROLINE (Polypropylene)
3. Polyvinylidene Chloride
3. Type I Polyvinyl Chloride
5. Polyester (Glass Fiber Reinforced)

## GENERAL NATURE OF CORROSION AND PLASTICS

Chemical resistance varies greatly between any two particular families of plastics. Within a given family of plastics, there are also differences between any two particular plastics. To compound the matter further, chemical resistance will vary slightly between different grades of a particular plastic or between resins made by different manufacturers. A specific plastic will vary slightly with respect to molecular weight, distribution, degree of crystallinity, amount of internal plasticization that may be present (co-polymerization), and other properties. Therefore, it is not suggested that general chemical resistance charts be used for determining the chemical resistance of a

given manufacturer's resin. In addition, it is strongly recommended that the practice of extrapolating on the basis of chemical similarity of a substance with respect to different plastics of a given family be avoided. What is recommended is that a specific manufacturer's chemical resistance table be consulted for the particular product, such as the Asahi/America tables for Asahi/America products.

The manner in which a type of chemical might effect a plastic also varies, due to the fact that differing chemicals produce differing reaction mechanisms when interacting with a plastic material. Depending on the reaction mechanism, an affected plastic may become embrittled, softened, charred, crazed, delaminated, discolored, dissolved, blistered or swelled. The reaction mechanisms that produce these types of effects can be grouped into major categories such as: chemical reaction; solvation; absorption; plasticization; and environmental stress-cracking. Combinations of these reaction mechanisms do occur and when it does, the detection is thus more complex.

Chemical reaction is a very general heading, and can be broken down into many distinct categories. Some of these include: oxidation, where chemical bonds are attacked; hydrolysis (not possible for polypropylene and PVDF); dehydration (mostly caused by heat); alkylation; halogenation; radiation; and others. Certain reactions are predictable due to chemical structure of the resin. However, attack usually occurs in a complex manner with respect to polymers, suggesting that testing be performed under actual conditions in order to make decision on performance.

## CRITERIA FOR MATERIAL SELECTION

There are several conditions which bear particular importance on the individual chemical attack mechanisms, and thus have a great effect on the selection process. The conditions of direct importance include: temperature, type of corrosive reagent to be handled, the concentration of the particular reagent, and the method by which plastic products are made.

### The Effect of Temperature

Temperature has a large effect on all of the attack mechanisms. The attack will almost always be directly related to temperature, with increasing temperature resulting in increasing attack on the plastic material. Not only does an increase in temperature result in a lowering of the activation energy required for a reaction to proceed, but it also causes a polymer to expand. This results in an increase in permeability, penetrability and solubility characteristics of the polymer which aid in a combination of the different mechanisms.

One important point should be noted regarding temperature. As a plastic increases through its temperature profile, there may be a certain transition temperature where the basic stress crack mechanism may be altered appreciably. The significance of this fact is that by trying to extrapolate from known performance at a low temperature to a high temperature may lead to erroneous results. A particular danger exists when a data point is presented at ambient temperature only, and an attempt is made to make a prediction near the design temperature limit of the polymer.

### The Effect of Concentration

There are many different families and types of reagents, each with different properties concerning solubility, reaction between other chemical groups, etc. Each will present a slightly different concern due to the different attack mechanisms that they might potentially trigger with respect to a given polymer type. The concentration of a reagent will also pose a concern, and can result in differing reaction rates at differing concentration levels. This is true for a variety of complex reasons. Of particular concern, but certainly not alone in importance, is the mineral acids. This group can show substantially different effects at various levels along the concentration profile.

Again, importance must be given to the concentration effect of a given chemical for the same reason that temperature causes great concern. A level of concentration may be obtained where suddenly a transition is achieved and the stress cracking mechanism can show substantial alteration. Extrapolating results on the basis of known concentrations is a very dangerous situation, and is strongly advised against. The larger the number of data points available, the better will be the prediction. However, testing is always recommended if performance is not known.

### Manufacturing Effect

The manner in which a product is manufactured can induce molded-in stresses which can produce changes in chemical resistance, particularly with regards to environmental stress-cracking. Manufacturing can also produce surface irregularities that vary from manufacturer to manufacturer. In general, a smoother surface will show better results in terms of all of the attack mechanisms. A higher level of molded-in stresses will produce a product that has less resistance to environmental stress-cracking.

## CHEMICAL ATTACK MECHANISMS

### Chemical Reaction Mechanism

Chemical attack by virtue of chemical reaction can proceed along the paths of any of the types of reactions described earlier, depending on the given chemical and plastic. If the active sites to be attacked along the polymer chain are at the ends, a chain reaction may be initiated leading to a complete "unzipping" of the polymer structure. If the sites are distributed, then at these distributed sites, the polymer will become scissioned or separated. This will lead to a consequent chemical breakdown of the polymer.

The ease of detecting a chemical reaction occurance through testing depends a great deal on the rates at which these reactions can occur. The typical properties to be measured include molecular weight, dimensions, overall appearance, and short term properties, such as, tensile strength, elongation, flexural properties, and the like. A rapid reaction can easily be detected through molecular weight change, color, appearance, etc. A slower reaction is better detected by the changes in the aforementioned short term mechanical properties. A challenge to the designer in analyzing chemical effect is to try to quantify these results. The point at which a

given plastic's change in properties make it no longer acceptable for a given time of application is arbitrary according to design needs. The most likely property to pay close attention to for piping systems is the tensile creep rupture tests, since this data is the most important property in analyzing design strength of a plastic piping system.

## Solvation Mechanism

Solvation effect of a given solvent on a thermoplastic usually manifests itself in terms of swelling of the plastic, and weight and dimensional changes. Simple tests similar to those described for chemical attack can readily detect these changes in the plastic. Both Proline and Super Proline are very stable due to their high molecular weights and stable molecular structures and thus are not subject to solvation by many known common solvents.

## Plasticization

Plasticization typically arises as an imperfect solvent is selectively absorbed into the surface of the product and incorporates itself into the molecular structure of the molecule through secondary bonding. The typical result is the significant lowering of mechanical properties, and the lowering of glass-transition temperature. The plastic might also tend to gain in weight or dimension, but this is likely to be used only as an indication of the effect. The significance of the effect is better described through measuring the mechanical properties as described earlier and measuring the glass-transition temperature.

## Environmental Stress Cracking Mechanism

When a plastic is subjected to stresses it may be subject to catastrophic failure due to the initiation and propagation of cracks and crazes. This is the process known as environmental stress cracking and is inherently difficult to predict. A basic mechanism is assumed in which a source of localized weakening on the surface of the plastic due to the chemical action of a chemical reagent is commonly accepted as what takes place. As this localized weakening takes place, a crack appears, creating greater surface area, while also acting as a stress concentrator. The effect is thus multiplied, and further failure results until the inevitable catastrophic failure results.

A crack may appear through selective absorption of the reagent into the polymer chain, selective solvation by the reagent of polymer from localized areas, or complexing along the polymer chain at localized sites. No matter what the selective mechanism for the localized attack is, the result is always a weakening of the localized area resulting in an initial failure, followed by crack propogation. The result of the crack propogation is as described above, greater surface area and stress concentration with subsequent catastrophic failure.

To test for environmental stress cracking, both exposure and stress must occur in unison in order to reveal the mechanism. Since this is the most important mechanism with respect to piping performance, three tests are described to assist in detecting this phenomenon.

# TESTING FOR ENVIRONMENTAL STRESS CRACKING

## Creep Rupture Test

To test for environmental stress-cracking under this procedure, the basic test for tensile creep (ASTM D-2990) is modified to produce the desired results. To conduct tests under ambient temperatures, a set-up similar to figure (I-2) might be used. To conduct measurements of creep strain and rupture at a variety of temperatures, a test set-up similar to figure (I-3) might be adapted. In this set-up, the encasing stainless steel outer pipe could be immersed into a constant temperature bath in which the temperature could be varied.

The advantages of these test procedures include the fact that stress-crack resistance is measured as a direct variable in terms of the reduction in design strength (stress) of the plastic (see Engineering Design Theory Section — section D). In addition, the expected service life could be extrapolated in a realistic fashion from these results.

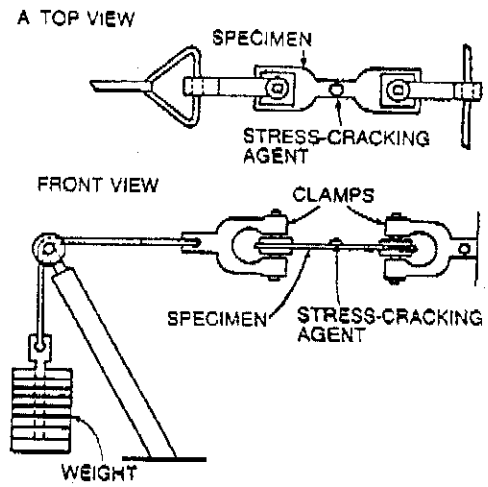


**Figure I-2: Detail Creep Rupture Test (Ambient Temperatures)**

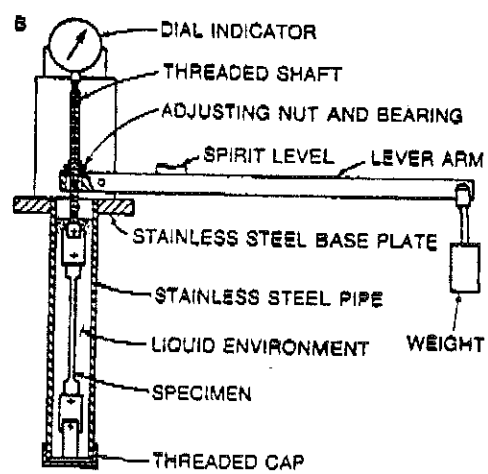


**Figure I-3: Detail of Creep Rupture Test (Elevated Temperatures)**

## Cantilever Beam Test

The cantilever test is a fairly simple test in comparison to the Creep Rupture Test previously described. It is valid primarily when short exposure times are required and when the material does not show significant creep. It is an excellent test for large numbers of test specimans. A suggested test set-up is shown in figure (I-4).

In the test, the test reagent is applied to the blotted paper, and the beam is bent by the clip attached to the end. Initially, trial and error is used to determine a weight that will produce cracking near the mid-point of the bar. Stress and strain will vary in a cantilevered beam from zero at the free end to the maximum at the clamped end. Cracks will therefore appear from the free end, all the way to the distance at which the combination of stress cracking reagent and stress reach the critical stress and strain point. The following formulae can be used to determine critical stress and strain:

$$S_c = \frac{6FL}{bt^2} \qquad \text{equation (I-1)}$$

Where: $S_c$ = critical stress, (psi)
$F$ = weight, (lb)
$L$ = critical distance (measured from free end), (in)
$b$ = width of the bar, (in)
$t$ = thickness of the bar, (in)

$$\epsilon_c = \frac{S_c}{E} \qquad \text{equation (I-2)}$$

Where: $\epsilon_c$ = critical strain, (in/in)
$E$ = short-term flexural modulus, (psi)

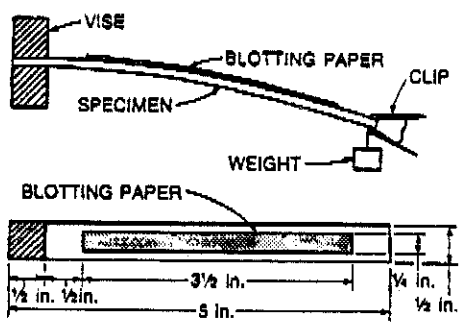


**Figure I-4: Detail of Cantilever Beam Test for Environmental Stress Cracking (Room Temperature)**

## Stress-Relaxation Test

A third alternative is to test a specimen under stress by subjecting it to a fixed deflection. This test eliminates the need for weights, and takes up little space. A suggested set-up is shown in figure (I-5). The test is limited to the more flexible plastics, and to situations where stress-cracking is of short duration, due to the effect of stress relaxation (see Engineering Design Theory — section D). To calculate critical strain at which stress-cracking first appears, use the following equation:

$$\epsilon_c = \left[\frac{bt}{2a^2}\left(1 - x^2\right)\left(\frac{1}{a^2} - \frac{b}{a^4}\right)\right] \qquad \text{equation (H-3)}$$

Where: $c$ = critical strain, (in/in)
$a$ = semi-major axis of ellipse, (in)
$b$ = semi-minor axis of ellipse, (in)
$x$ = distance along major axis, (in)
$t$ = thickness, (in)

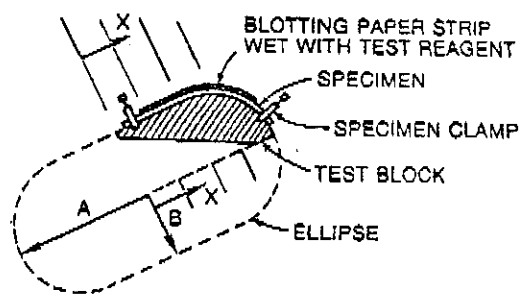


**Figure I-5: Detail of Stress-Relaxation Test**

# CHEMICAL RESISTANCE TABLES FOR PROLINE AND SUPER PROLINE

## General Information

The following tables give qualitative information as to the resistance of Proline (polypropylene) and Super Proline (polyvinylidene fluoride) to specific chemical at various conditions. The values given correspond to the most accurate information available from raw materials suppliers of the specific resins, based upon testing results and other relevant literature.

It should be emphasized that this data has been compiled for initial consultation purposes. The information is in no way intended to replace testing based on actual conditions. Also, the user should contact a competent corrosion expert (certified by NACE or with sufficient experience in these materials) to verify any recommendation or to interpret the tables. Furthermore, any special or unusual factors, including the length of time or level of stress in the system should be taken into consideration. In all circumstances, the engineering department of Asahi/America should be consulted to review and verify final recommendations.

The following symbols are used in the tables:

**RESISTANT SYMBOL**
On the basis of the data, little or no effect on the material has been made evident within the given range of pressure and temperature limits.

• • • • • • **CONDITIONALLY RESISTANT SYMBOL**
Suitability has to be checked in each individual case of application. Further testing may have to be performed to offer a specific recommendation. Please consult with the engineering department of Asahi/America for a specific recommendation.

0 **NON-RESISTANT SYMBOL**
The material is generally regarded to be unsuitable. Therefor, the application is not recommend.

The following abbreviations are used for concentrations in some cases, where a specific numeric value is not given.

VL - aqueous solution, percentage of mass less than 10%
L - aqueous solution, percentage of mass higher than 10%
GL - aqueous solution, saturated at 68°F (20°c)
TR - minimum technically pure concentration
H - commercially available concentration

The following footnotes are used in the body of the tables:

1) penetration of HCl possible
2) oxidizing
3) penetration of HF possible
4) medium might cause stress cracking
5) penetration of HBr possible

## TABLE I-1
## CHEMICAL RESISTANCE OF PP AND PVDF

| Medium | Concentration % | Material | Temperature °C (20 40 60 80 100 120) |
|---|---|---|---|
| Acetaldehyde | 40 | PVDF | 0 |
| | | PP | |
| | 100 | PVDF | 0 |
| | | PP | |
| Acetaldehyde + Acetic acid | 90/10 | PVDF | 0 |
| | | PP | |
| Acetic acid aqueous | 10 | PVDF | |
| | | PP | |
| Acetic acid aqueous (Glacial acetic acid) | min 96 | PVDF | |
| | | PP | |
| Acetic acid - ethyl ester (Ethyl acetate) | TR | PVDF | |
| | | PP | |
| Acetic acid - methyl ester (Methyl acetate) | TR | PVDF | |
| | | PP | |
| Acetic anhydrid | TR | PVDF | |
| | | PP | |
| Acetone | GL | PVDF | |
| | | PP | |
| | 100 | PVDF | 0 |
| | | PP | |
| Acetophenone | TR | PVDF | |
| | | PP | |
| Acrylic acid ethylic ester | 100 | PVDF | |
| | | PP | |
| Acrylonitrile | TR | PVDF | |
| | | PP | |
| Adipic acid aqueous | GL | PVDF | |
| | | PP | |
| Air | TR | PVDF | |
| | | PP | |
| Allyl alcohol (2-propen-1-ol) | 96 | PVDF | |
| | | PP | |
| Aluminium chloride | GL | PVDF | |
| | | PP | |
| Aluminium fluoride | GL | PVDF | |
| | | PP | |
| Aluminium sulphate | GL | PVDF | |
| | | PP | |
| Alums (metal(I)-and metal (III)-sulphates) | GL | PVDF | |
| | | PP | |

| Medium | Concentration % | Material | Temperature °C (20 40 60 80 100 120) |
|---|---|---|---|
| Ammonia gas | TR | PVDF | |
| | | PP | |
| Ammonia liquid | TR | PVDF | 0 |
| | | PP | |
| Ammonia solution aqueous (Ammonia water) | 33 | PVDF | |
| | | PP | |
| Ammonia aluminium sulphate (Ammonia alum) | L | PVDF | |
| | | PP | |
| Ammonia carbonate & ammonium hydrogen carbonate | GL | PVDF | |
| | | PP | |
| Ammonium chloride | GL | PVDF | |
| | | PP | |
| Ammonium iron (III)-sulphate (Iron alum) | L | PVDF | |
| | | PP | |
| Ammonium fluoride | L | PVDF | |
| | | PP | |
| Ammonium nitrate | GL | PVDF | |
| | | PP | |
| Ammonium phosphate | GL | PVDF | |
| | | PP | |
| Ammonium sulphide | L | PVDF | |
| | | PP | |
| Ammonium sulphate | GL | PVDF | |
| | | PP | |
| Amyl acetate | TR | PVDF | |
| | | PP | |
| Aniline hydrochloride aqueous | GL | PVDF | |
| | | PP | |
| Aniline pure | TR | PVDF | |
| | | PP | |
| Anone | TR | PVDF | |
| | | PP | |
| Anthraquinone sulphone acid | GL | PVDF | |
| | | PP | |
| Anti-freezers (motor vehicles) | H | PVDF | |
| | | PP | |
| Antimony chloride aqueous | 90 | PVDF | |
| | | PP | |
| Aqua regia ($HCl/HNO_3$) | 75/25 | PVDF | |
| | | PP | 0 |

## TABLE I-1
## CHEMICAL RESISTANCE OF PP AND PVDF

| Medium | Concentration % | Material | Temperature °C (20, 40, 60, 80, 100, 120) |
|---|---|---|---|
| Arsenic acid aqueous | 80 | PVDF | |
| | | PP | |
| Barium carbonate | GL | PVDF | |
| | | PP | |
| Barium chloride | GL | PVDF | |
| | | PP | |
| Barium hydroxide | GL | PVDF | 0 |
| | | PP | |
| Barium salts | GL | PVDF | |
| | | PP | |
| Barium sulphate | GL | PVDF | |
| | | PP | |
| Beater glue | H | PVDF | |
| | | PP | |
| Beer | H | PVDF | |
| | | PP | |
| Beer dye (Sugar dye) | VL | PVDF | |
| | | PP | |
| Bees-wax | H | PVDF | |
| | | PP | |
| Benzaldehyde | GL | PVDF | |
| | | PP | |
| Benzine | H | PVDF | |
| | | PP | |
| Benzine - benzole mixture | 80/20 | PVDF | |
| | | PP | |
| Benzoic acid | GL | PVDF | |
| | | PP | |
| Benzene | TR | PVDF | |
| | | PP | |
| Benzoyl chloride | TR | PVDF | |
| | | PP | |
| Benzyl alcohol | TR | PVDF | |
| | | PP | |
| Bisulphite lye containing $SO_2$ | GL | PVDF | |
| | | PP | |
| Bleaching solution (Sodium hypochloride) | 20 | PVDF | |
| | | PP | |

| Medium | Concentration % | Material | Temperature °C (20, 40, 60, 80, 100, 120) |
|---|---|---|---|
| Boric acid aqueous | GL | PVDF | |
| | | PP | |
| Borax, aqueous (Sodium tetraborate) | GL | PVDF | |
| | | PP | |
| Bromine liquid | TR | PVDF | |
| | | PP | 0 |
| Bromine fumes | TR | PVDF | |
| | | PP | 0 |
| Bromine[5] (Bromine water) | GL | PVDF | |
| | | PP | |
| Butadiene gas | TR | PVDF | |
| | | PP | |
| Butane gas | TR | PVDF | |
| | | PP | |
| Butanediol aqueous | L | PVDF | |
| | | PP | |
| Butanediol | TR | PVDF | |
| | | PP | |
| Butanol (Butyl alcohol) | TR | PVDF | |
| | | PP | |
| 1,2,4-Butanetriol | TR | PVDF | |
| | | PP | |
| 2-Butene-1,4-diol | TR | PVDF | |
| | | PP | |
| Butindiol | TR | PVDF | |
| | | PP | |
| Butyric acid (and isobutyric acid) | TR | PVDF | |
| | | PP | |
| Butylacetate | TR | PVDF | |
| | | PP | |
| Butylene liquid | TR | PVDF | |
| | | PP | |
| Butylene glycol (1,4-Butanediol) aqueous | TR | PVDF | |
| | | PP | |
| Butylene glycol (Ethylene glycol monobutyl ether) | TR | PVDF | |
| | | PP | |
| Butylphenol | GL | PVDF | |
| | | PP | |
| Butylphenone | GL | PVDF | |
| | | PP | |

## TABLE I-1
## CHEMICAL RESISTANCE OF PP AND PVDF

| Medium | Concentration % | Material | Temperature °C (20 40 60 80 100 120) |
|---|---|---|---|
| Butylphthalate (Dibutylphthalate) | TR | PVDF | |
| | | PP | |
| Calcium carbonate | GL | PVDF | |
| | | PP | |
| Calcium chlorate | GL | PVDF | |
| | | PP | |
| Calcium chloride aqueous | GL | PVDF | |
| | | PP | |
| Calcium hydroxide | GL | PVDF | |
| | | PP | |
| Calcium hypochlorite (Chloride of lime), aqueous | L | PVDF | |
| | | PP | |
| Calcium nitrate aqueous | GL | PVDF | |
| | | PP | |
| Calcium sulphate | GL | PVDF | |
| | | PP | |
| Calcium sulphide | VL | PVDF | |
| | | PP | |
| Camphoric oil (Camphor oil) | TR | PVDF | |
| | | PP | 0 |
| Carbolineum | H | PVDF | |
| | | PP | |
| Carbon monoxide gas | TR | PVDF | |
| | | PP | |
| Carbonic disulphide | TR | PVDF | |
| | | PP | |
| Carbon dioxide gas | TR | PVDF | |
| | | PP | |
| Carbonic acid dry | H | PVDF | |
| | | PP | |
| Carbonic acid aqueous | GL | PVDF | |
| | | PP | |
| Carbonic acid wet | H | PVDF | |
| | | PP | |
| Castor oil | TR | PVDF | |
| | | PP | |
| Caustic lye aqueous | 50 | PVDF | |
| | | PP | |

| Medium | Concentration % | Material | Temperature °C (20 40 60 80 100 120) |
|---|---|---|---|
| Caustic lye aqueous | L | PVDF | |
| | | PP | |
| Caustic soda | 60 | PVDF | |
| | | PP | |
| Chloracetic acid (mono), aqueous | L | PVDF | |
| | | PP | |
| Chloracetic acid (mono), aqueous | 85 | PVDF | |
| | | PP | |
| Chloral (Trichlor acetaldehyde) | TR | PVDF | |
| | | PP | |
| Chloral hydrate | TR | PVDF | |
| | | PP | |
| Chloramine aqueous | L | PVDF | |
| | | PP | |
| Chlordiphenyl | H | PVDF | |
| | | PP | |
| Chloroethane (Ethyl chloride) | TR | PVDF | |
| | | PP | 0 |
| 2-Chlorethanol (Ethylenechlorohydrin) | TR | PVDF | |
| | | PP | |
| Chlorc acid aqueous | 1 | PVDF | |
| | | PP | |
| Chloric acid aqueous | 10 | PVDF | |
| | | PP | |
| Chloric acid aqueous | 20 | PVDF | |
| | | PP | |
| Chloride of lime (Slurry in water) | any | PVDF | |
| | | PP | |
| Chlorine liquid | TR | PVDF | |
| | | PP | 0 |
| Chlorine gas, wet | 0.5 | PVDF | |
| | | PP | |
| Chlorine gas, wet | 1 | PVDF | |
| | | PP | |
| Chlorine gas, dry | TR | PVDF | |
| | | PP | 0 |
| Chlorine water (Chlorine) | GL | PVDF | |
| | | PP | |
| Chlormethyl | 100 | PVDF | |
| | | PP | 0 |

## TABLE I-1
## CHEMICAL RESISTANCE OF PP AND PVDF

| Medium | Concentration % | Material | Temperature °C (20 40 60 80 100 120) |
|---|---|---|---|
| Chlorobenzene | TR | PVDF | |
| | | PP | 0 |
| Chloroform (Trichloromethane) | TR | PVDF | |
| | | PP | 0 |
| Chloromethane (Methylchloride gas) | TR | PVDF | |
| | | PP | |
| Chlorosulphonic acid | TR | PVDF | |
| | | PP | 0 |
| Chrome alum aqueous | GL | PVDF | |
| | | PP | |
| Chrome acid[4] (Chrome(VI)-oxide[4]) aqueous | 20 | PVDF | |
| | | PP | |
| Chrome acid[4] (Chrome(VI)-oxide[4]) aqueous | 40 | PVDF | |
| | | PP | |
| Chromosulphuric acid, Chromic acid/ sulphuric acid | 15/35/50 | PVDF | |
| | | PP | 0 |
| Citric acid | GL | PVDF | |
| | | PP | |
| Citric acid aqueous | VL | PVDF | |
| | | PP | |
| Coconut butter alcohol | TR | PVDF | |
| | | PP | |
| Common salt aqueous | VL | PVDF | |
| | | PP | |
| Common salt (Natrium chloride) | GL | PVDF | |
| | | PP | |
| Copper(II)-chloride | GL | PVDF | |
| | | PP | |
| Copper(II)-cyanide | GL | PVDF | |
| | | PP | |
| Copper fluoride aqueous | GL | PVDF | |
| | | PP | |
| Copper(II)-nitrate aqueous | 30 | PVDF | |
| | | PP | |
| Copper(II)-nitrate | GL | PVDF | |
| | | PP | |
| Copper(II)-sulphate | GL | PVDF | |
| | | PP | |
| Copper sulphate aqueous | GL | PVDF | |
| | | PP | |

| Medium | Concentration % | Material | Temperature °C (20 40 60 80 100 120) |
|---|---|---|---|
| Cotton seed oil | TR | PVDF | |
| | | PP | |
| Cresol aqueous | <90 | PVDF | |
| | | PP | |
| Cresol aqueous | ≥90 | PVDF | |
| | | PP | |
| Crotonaldehyde | TR | PVDF | |
| | | PP | |
| Cyanide of potassium (Potassium cyanice) | L | PVDF | |
| | | PP | |
| Cyanide of potassium aqueous | GL | PVDF | |
| | | PP | |
| Cyclohexanol | TR | PVDF | |
| | | PP | |
| Cyclohexanone | TR | PVDF | |
| | | PP | |
| Cyclohexane | TR | PVDF | |
| | | PP | |
| Decalin® (Decahydronaphthaline) | TR | PVDF | |
| | | PP | |
| Detergents | H | PVDF | |
| | | PP | |
| Dextrine aqueous | L | PVDF | |
| | | PP | |
| Dextrose (Starch sugar, glucose) | 20 | PVDF | |
| | | PP | |
| 1,2-Diaminoethane (Ethylene diamine) | TR | PVDF | |
| | | PP | |
| Dibutyl phthalate | TR | PVDF | |
| | | PP | |
| Dichloroethane (vinylidene dichloride & vinylene dichloride) | TR | PVDF | |
| | | PP | 0 |
| Dichloroethylene (1,1 and 1,2) | TR | PVDF | |
| | | PP | 0 |
| Dichloroacetic acid aqueous | 50 | PVDF | |
| | | PP | |

## TABLE I-1
## CHEMICAL RESISTANCE OF PP AND PVDF

| Medium | Concentration % | Material | Temperature °C (20, 40, 60, 80, 100, 120) |
|---|---|---|---|
| Dichloroacetic acid aqueous | TR | PVDF | |
| | | PP | |
| Dichloroacetic acid methyl ester | TR | PVDF | |
| | | PP | |
| Dichlorobenzene | TR | PVDF | |
| | | PP | |
| Diesel fuel | H | PVDF | |
| | | PP | |
| Diethanolamine | TR | PVDF | 0 |
| | | PP | |
| Diethyl ether (Ethyl ether) | TR | PVDF | |
| | | PP | |
| Diglycolic acid aqueous | GL | PVDF | |
| | | PP | |
| Dihexylphthalate | TR | PVDF | |
| | | PP | |
| Diisobutyl ketone (2,6-Dimethyl-4-heptanone) | TR | PVDF | |
| | | PP | |
| Diisooctyl phthalate | TR | PVDF | |
| | | PP | |
| Diisopropyl ether | TR | PVDF | |
| | | PP | |
| Dimethylamine gas | 100 | PVDF | |
| | | PP | |
| Di-n-Butylether | TR | PVDF | |
| | | PP | |
| Dinonylphthalate (DNP) | TR | PVDF | |
| | | PP | |
| Dioctylphthalate (DOP) | TR | PVDF | |
| | | PP | |
| 1,4-Dioxan (Diethylene dioxide) | TR | PVDF | |
| | | PP | |
| Emulsions photographic | H | PVDF | |
| | | PP | |
| Enzyme mash | H | PVDF | |
| | | PP | |

| Medium | Concentration % | Material | Temperature °C (20, 40, 60, 80, 100, 120) |
|---|---|---|---|
| Ester | 40 | PVDF | |
| | | PP | |
| Ethanol (Ethyl alcohol) | TR | PVDF | |
| | | PP | |
| Ethyl acetate | 100 | PVDF | |
| | | PP | |
| Ethyl alcohol aqueous | 96 | PVDF | |
| | | PP | |
| Ethyl alcohol + acetic acid (Enzyme compound) | H | PVDF | |
| | | PP | |
| Ethyl alcohol (Enzyme mash) | H | PVDF | |
| | | PP | |
| Ethyl alcohol methylated with Toluol 2% | 96 | PVDF | |
| | | PP | |
| Ethyl benzene | TR | PVDF | |
| | | PP | |
| Ethyl chloride gas (Chloroethane) | TR | PVDF | |
| | | PP | 0 |
| Ethylenechlorohydrin (Chloroethanol) | TR | PVDF | |
| | | PP | |
| Ethylenediamine (1,2-Diaminoethane) | TR | PVDF | |
| | | PP | |
| Ethylene glycol (1,2-Ethanediol) | TR | PVDF | |
| | | PP | |
| Ethylene oxide gas (Oxiran) | TR | PVDF | |
| | | PP | 0 |
| Ethyl ether | 100 | PVDF | |
| | | PP | |
| Exhaust gases containing $SO_2$ | VL | PVDF | |
| | | PP | |
| Exhaust gases containing carbon dioxide | any | PVDF | |
| | | PP | |
| Exhaust gases containing hydrochloric acid[1] | any | PVDF | |
| | | PP | |
| Exhaust gases containing hydrogen fluoride | VL | PVDF | |
| | | PP | |
| Exhaust gases containing nitrogen | VL | PVDF | |
| | | PP | |
| Exhaust gases containing oleum | VL | PVDF | |
| | | PP | 0 |

# TABLE I-1
## CHEMICAL RESISTANCE OF PP AND PVDF

| Medium | Concentration % | Material | Temperature °C (20 40 60 80 100 120) |
|---|---|---|---|
| Exhaust gases sulphuric acid wet | any | PVDF | |
| | | PP | |
| Fatty acids | 100 | PVDF | |
| | | PP | |
| Fertilizer salt | H | PVDF | |
| | | PP | |
| Fixing solutions photographic | H | PVDF | |
| | | PP | |
| Fluor gas, dry | TR | PVDF | |
| | | PP | 0 |
| Fluorammonium aqueous | 20 | PVDF | |
| | | PP | |
| Fluosilicic acid aqueous | 32 | PVDF | |
| | | PP | |
| Fluosilicic acid aqueous | 40 | PVDF | |
| | | PP | |
| Formaldehyde aqueous | 40 | PVDF | |
| | | PP | |
| Formic acid aqueous | 85 | PVDF | |
| | | PP | |
| Fructose | L | PVDF | |
| | | PP | |
| Fruit juices, pulp | H | PVDF | |
| | | PP | |
| Fruit pulp | H | PVDF | |
| | | PP | |
| Fuel oil | H | PVDF | |
| | | PP | |
| Furfuryl alcohol | TR | PVDF | |
| | | PP | |
| Gaswater | H | PVDF | |
| | | PP | |
| Gelatine | L | PVDF | |
| | | PP | |

| Medium | Concentration % | Material | Temperature °C (20 40 60 80 100 120) |
|---|---|---|---|
| Glacial acetic acid | 100 | PVDF | |
| | | PP | |
| Glucose aqueous | 20 | PVDF | |
| | | PP | |
| Glucose aqueous | GL | PVDF | |
| | | PP | |
| Glycerine (Glycerol), aqueous | any | PVDF | |
| | | PP | |
| Glycol aqueous | H | PVDF | |
| | | PP | |
| Glycocol aqueous | 10 | PVDF | |
| | | PP | |
| Glycolic acid aqueous | 30 | PVDF | |
| | | PP | |
| Glycolic acid aqueous | 70 | PVDF | |
| | | PP | |
| Heptane | TR | PVDF | |
| | | PP | |
| Hexane | TR | PVDF | |
| | | PP | |
| Hexanetriol (1,2,6) | TR | PVDF | |
| | | PP | |
| Hydrazine hydrate | TR | PVDF | |
| | | PP | |
| Hydrobromic acid (solution) aqueous [4] | 48 | PVDF | |
| | | PP | |
| Hydrochloric acid aqueous [1][4] | VL | PVDF | |
| | | PP | |
| Hydrochloric acid aqueous [1][4] | >32 | PVDF | |
| | | PP | |
| Hydrocyanic acid | L | PVDF | |
| | | PP | |
| Hydrocyanic acid aqueous | TR | PVDF | |
| | | PP | |
| Hydrofluoric acid aqueous [3][4] | 4 | PVDF | |
| | | PP | |
| Hydrofluoric acid aqueous [3][4] | 40 | PVDF | |
| | | PP | |

## TABLE I-1
## CHEMICAL RESISTANCE OF PP AND PVDF

| Medium | Concentration % | Material | Temperature °C (20 40 60 80 100 120) |
|---|---|---|---|
| Hydrofluoric acid aqueous[3][4] | 60 | PVDF | |
| | | PP | |
| Hydrofluoric acid aqueous[3][4] | 70 | PVDF | |
| | | PP | |
| Hydrofluosilicic acid aqueous | 32 | PVDF | |
| | | PP | |
| Hydrofluosilicic acid aqueous | 40 | PVDF | |
| | | PP | |
| Hydrogen bromide gas[5] | TR | PVDF | |
| | | PP | |
| Hydrogen chloride gas wet & dry[2] | TR | PVDF | |
| | | PP | |
| Hydrogen gas | TR | PVDF | |
| | | PP | |
| Hydrogen peroxide aqueous | 30 | PVDF | |
| | | PP | |
| Hydrogen peroxide aqueous | 90 | PVDF | |
| | | PP | |
| Hydrogen sulphide aqueous | GL | PVDF | |
| | | PP | |
| Hydrogen sulphide gas, dry | TR | PVDF | |
| | | PP | |
| Hydrogenthyposulphite aqueous | VL | PVDF | |
| | | PP | |
| Hydroquinone | L | PVDF | |
| | | PP | |
| Hydroquinone | GL | PVDF | |
| | | PP | |
| Hydroxylamine sulphate aqueous | ≤12 | PVDF | |
| | | PP | |
| Iodine, tincture | H | PVDF | |
| | | PP | |
| Iron(II)-chloride | GL | PVDF | |
| | | PP | |
| Iron(III)-chloride | GL | PVDF | |
| | | PP | |
| Iron(III)-nitrate | L | PVDF | |
| | | PP | |

| Medium | Concentration % | Material | Temperature °C (20 40 60 80 100 120) |
|---|---|---|---|
| Iron(II)-sulphate | GL | PVDF | |
| | | PP | |
| Iron(III)-sulphate | GL | PVDF | |
| | | PP | |
| Isobutanol | TR | PVDF | |
| | | PP | |
| Isobutyric acid | TR | PVDF | |
| | | PP | |
| Isooctane | TR | PVDF | |
| | | PP | |
| Isopropyl alcohol | TR | PVDF | |
| | | PP | |
| Lactic acid | TR | PVDF | |
| | | PP | |
| Lactic acid aqueous | 90 | PVDF | |
| | | PP | |
| Lanolin (Wool oil) | H | PVDF | |
| | | PP | |
| Lead acetate aqueous | GL | PVDF | |
| | | PP | |
| Lead tetraethyl (Tetraethyl lead) | TR | PVDF | |
| | | PP | |
| Light liquid paraffin | TR | PVDF | |
| | | PP | |
| Lighting gas | H | PVDF | |
| | | PP | |
| Linseed oil | H | PVDF | |
| | | PP | |
| Liquid ammonia (Ammonia water) | GL | PVDF | |
| | | PP | |
| Magnesium carbonate | GL | PVDF | |
| | | PP | |
| Magnesium chloride aqueous | GL | PVDF | |
| | | PP | |
| Magnesium hydroxide | GL | PVDF | |
| | | PP | |

## TABLE I-1
## CHEMICAL RESISTANCE OF PP AND PVDF

| Medium | Concentration % | Material | Temperature °C (20 40 60 80 100 120) |
|---|---|---|---|
| Magnesium hydroxide carbonate | GL | PVDF | |
| | | PP | |
| Magnesium nitrate | GL | PVDF | |
| | | PP | |
| Magnesium salts | GL | PVDF | |
| | | PP | |
| Magnesium sulphate aqueous | GL | PVDF | |
| | | PP | |
| Maize seed oil | TR | PVDF | |
| | | PP | |
| Maleic acid aqueous | GL | PVDF | |
| | | PP | |
| Malic acid aqueous | | PVDF | |
| | | PP | |
| Menthol | TR | PVDF | |
| | | PP | |
| Mercury | TR | PVDF | |
| | | PP | |
| Mercury(II)-chloride | GL | PVDF | |
| | | PP | |
| Mercury(II)-cyanide | GL | PVDF | |
| | | PP | |
| Mercury(I)-nitrate | L | PVDF | |
| | | PP | |
| Mercury salts | GL | PVDF | |
| | | PP | |
| Methane bromide (Methyl bromide) | TR | PVDF | |
| | | PP | 0 |
| Methanol (Methyl alcohol) | TR | PVDF | |
| | | PP | |
| Methanesulphonic acid (Methylsulphuric acid), aqueous | ≤50 | PVDF | |
| | | PP | |
| Methanesulphonic acid (Methylsulphuric acid), aqueous | >50 | PVDF | |
| | | PP | |
| Methyl alcohol (Methanol) | 5% | PVDF | |
| | | PP | |
| Methylamine aqueous | 32 | PVDF | |
| | | PP | |
| Methoxybutanol | TR | PVDF | |
| | | PP | |

| Medium | Concentration % | Material | Temperature °C (20 40 60 80 100 120) |
|---|---|---|---|
| Methoxybutyl alcohol | TR | PVDF | |
| | | PP | |
| Methylbenzoin acids (Toluene acids) | GL | PVDF | |
| | | PP | |
| Methyl bromide | TR | PVDF | |
| | | PP | 0 |
| Methyl chloride | TR | PVDF | |
| | | PP | 0 |
| Methylene chloride (Dichloromethane) | TR | PVDF | |
| | | PP | |
| Methyl ethyl ketone | TR | PVDF | |
| | | PP | |
| Milk | H | PVDF | |
| | | PP | |
| Mineral oil | H | PVDF | |
| | | PP | |
| Mineral water | H | PVDF | |
| | | PP | |
| Molasses | H | PVDF | |
| | | PP | |

| | | | |
|---|---|---|---|
| Naphtha | H | PVDF | |
| | | PP | |
| Natural gas | TR | PVDF | |
| | | PP | |
| N,N-Dimethylformamide | TR | PVDF | 0 |
| | | PP | |
| Nickel(II)-chloride | GL | PVDF | |
| | | PP | |
| Nickel(II)-nitrate | GL | PVDF | |
| | | PP | |
| Nickel salts | GL | PVDF | |
| | | PP | |
| Nickle(II)-sulphate | GL | PVDF | |
| | | PP | |
| Nicotinic acid | VL | PVDF | |
| | | PP | |

## TABLE I-1
## CHEMICAL RESISTANCE OF PP AND PVDF

| Medium | Concentration % | Material | Temperature °C (20 40 60 80 100 120) |
|---|---|---|---|
| Nitric acid aqueous | VL | PVDF | |
| | | PP | |
| Nitric acid aqueous | 10 - 50 | PVDF | |
| | | PP | |
| Nitric acid aqueous | >50 <65 | PVDF | |
| | | PP | 0 |
| Nitrobenzene | TR | PVDF | |
| | | PP | |
| Nitrous fumes[2] | GL | PVDF | |
| | | PP | |
| 2-Nitrotoluene | TR | PVDF | |
| | | PP | |
| Octylcresole | TR | PVDF | |
| | | PP | |
| Oil of turpentine | TR | PVDF | |
| | | PP | 0 |
| Oils essential | TR | PVDF | |
| | | PP | |
| Oils, vegetable & animal | TR | PVDF | |
| | | PP | |
| Oleic acid | TR | PVDF | |
| | | PP | |
| Oleum ($H_2SO_4 + SO_3$) | TR | PVDF | 0 |
| | | PP | 0 |
| Oleum fumes | VL | PVDF | |
| | | PP | 0 |
| Oleum fumes | L | PVDF | |
| | | PP | 0 |
| Oxalic acid aqueous | GL | PVDF | |
| | | PP | |
| Oxygen | TR | PVDF | |
| | | PP | |
| Ozone gas[4] | 0.5 PPM | PVDF | |
| | | PP | |
| Paraffin emulsions | TR | PVDF | |
| | | PP | |

| Medium | Concentration % | Material | Temperature °C (20 40 60 80 100 120) |
|---|---|---|---|
| Paraffin oil | TR | PVDF | |
| | | PP | |
| Peanut oil | TR | PVDF | |
| | | PP | |
| 1-Pentanol (n-Amylalcohol) | TR | PVDF | |
| | | PP | |
| 2-Pentanol (sec.-n-Amylalcohol) | TR | PVDF | |
| | | PP | |
| Peppermint oil | TR | PVDF | |
| | | PP | |
| Perchloric acid aqueous | 20 | PVDF | |
| | | PP | |
| Perchloric acid aqueous | 50 | PVDF | |
| | | PP | |
| Perchloric acid aqueous | 70 | PVDF | |
| | | PP | |
| Perchloroethylene (Tetrachloroethane) | TR | PVDF | |
| | | PP | |
| Petroleum | TR | PVDF | |
| | | PP | |
| Petroleum ether | TR | PVDF | |
| | | PP | |
| Phenol aqueous | 5 | PVDF | |
| | | PP | |
| Phenol aqueous | 90 | PVDF | |
| | | PP | |
| Phenylhydrazine | TR | PVDF | |
| | | PP | |
| Phenylhydrochloride | TR | PVDF | |
| | | PP | |
| Phosgene gas | TR | PVDF | |
| | | PP | |
| Phosgene liquid | TR | PVDF | |
| | | PP | 0 |
| Phosphates inorganic | GL | PVDF | |
| | | PP | |
| Phosphoric acid aqueous | 95 | PVDF | |
| | | PP | |
| Phosphoric acid aqueous | 50 | PVDF | |
| | | PP | |

## TABLE I-1
## CHEMICAL RESISTANCE OF PP AND PVDF

| Medium | Concentration % | Material | Temperature C (20 40 60 80 100 120) |
|---|---|---|---|
| Phosphoric acid (Ortho-) | 85 | PVDF | |
| | | PP | |
| Phosphorus (III)-chloride | TR | PVDF | |
| | | PP | |
| Phosphorus oxychloride | TR | PVDF | |
| | | PP | |
| Phosphorus pentoxide | TR | PVDF | |
| | | PP | |
| Phosphorus trichloride | TR | PVDF | |
| | | PP | |
| Photographic developing agents | H | PVDF | |
| | | PP | |
| Phthalic acid | GL | PVDF | |
| | | PP | |
| Picric acid (2,4,6-Trinitrophenols) | GL | PVDF | |
| | | PP | |
| Pine needle oil | H | PVDF | |
| | | PP | |
| Potable water (chlorous) | TR | PVDF | |
| | | PP | |
| Potassium aluminium sulphate (Potassium alum) | L | PVDF | |
| | | PP | |
| Potassium bicarbonate | GL | PVDF | |
| | | PP | |
| Potassium bisulphate | GL | PVDF | |
| | | PP | |
| Potassium hydrogen sulphite (Potassium bisulphite) | L | PVDF | |
| | | PP | |
| Potassium borate aqueous | 1 | PVDF | |
| | | PP | |
| Potassium bromate aqueous | 10 | PVDF | |
| | | PP | |
| Potassium bromate | GL | PVDF | |
| | | PP | |
| Potassium bromide aqueous | GL | PVDF | |
| | | PP | |
| Potassium carbonate (Potash) | GL | PVDF | 0 |
| | | PP | |
| Potassium chlorate | GL | PVDF | |
| | | PP | |

| Medium | Concentration % | Material | Temperature C (20 40 60 80 100 120) |
|---|---|---|---|
| Potassium chloride aqueous | GL | PVDF | |
| | | PP | |
| Potassium chromate aqueous | GL | PVDF | |
| | | PP | |
| Potassium chrome (III) sulphate (Chrome alum) | L | PVDF | |
| | | PP | |
| Potassium cyanide (Cyanide of potassium) | L | PVDF | |
| | | PP | |
| Potassium dichromate aqueous | GL | PVDF | |
| | | PP | |
| Potassium ferri-cyanide & potassium ferrocyanide. | GL | PVDF | |
| | | PP | |
| Potassium fluoride | GL | PVDF | |
| | | PP | |
| Potassium hexa-cyanoFerrate(III)&(III) (yellow & red prussiate of potash) | GL | PVDF | |
| | | PP | |
| Potassium hypochlorite | L | PVDF | |
| | | PP | |
| Potassium iodide | GL | PVDF | |
| | | PP | |
| Potassium nitrate aqueous | GL | PVDF | |
| | | PP | |
| Potassium perchlorate aqueous | 10 | PVDF | |
| | | PP | |
| Potassium perchlorate aqueous | GL | PVDF | |
| | | PP | |
| Potassium permanganate aqueous | 6 | PVDF | |
| | | PP | |
| Potassium permanganate aqueous | 20 | PVDF | |
| | | PP | |
| Potassium peroxodi-sulphate (Potassium persulphate) | GL | PVDF | |
| | | PP | |
| Potassium phosphate | GL | PVDF | |
| | | PP | |
| Potassium sulphate | GL | PVDF | |
| | | PP | |
| Potassium sulphide | L | PVDF | |
| | | PP | |
| Potatoe-spirit oil | TR | PVDF | |
| | | PP | |

## TABLE I-1
## CHEMICAL RESISTANCE OF PP AND PVDF

| Medium | Concentration % | Material | Temperature C (20 40 60 80 100 120) |
|---|---|---|---|
| Propane gas | TR | PVDF | |
| | | PP | |
| Propane liquid | TR | PVDF | |
| | | PP | |
| Propionic acid aqueous | 50 | PVDF | |
| | | PP | |
| Propionic acid | TR | PVDF | |
| | | PP | |
| Propanol-(1) (Propyl alcohol) | TR | PVDF | |
| | | PP | |
| Propargylalcohol aqueous | 7 | PVDF | |
| | | PP | |
| Propylene glycol | TR | PVDF | |
| | | PP | |
| Pyridine | TR | PVDF | |
| | | PP | |
| Roaster dry | any | PVDF | |
| | | PP | |
| Salicylic acid | GL | PVDF | |
| | | PP | |
| Sea-water (Lake water) | H | PVDF | |
| | | PP | |
| Silicic acid aqueous | H | PVDF | |
| | | PP | |
| Silicone emulsion | H | PVDF | |
| | | PP | |
| Silicone oil | TR | PVDF | |
| | | PP | |
| Silver acetate | GL | PVDF | |
| | | PP | |
| Silver cyanide | GL | PVDF | |
| | | PP | |
| Silver nitrate aqueous | GL | PVDF | |
| | | PP | |
| Silver salts | GL | PVDF | |
| | | PP | |

| Medium | Concentration % | Material | Temperature C (20 40 60 80 100 120) |
|---|---|---|---|
| Soaps aqueous | GL | PVDF | |
| | | PP | |
| Soda (Sodium bicarbonate) | 50 | PVDF | |
| | | PP | |
| Soda lye (Sodium hydroxide) aqueous | 40 | PVDF | 0 |
| | | PP | |
| Soda lye (Sodium hydroxide) aqueous | 60 | PVDF | 0 |
| | | PP | |
| Sodium acetate | GL | PVDF | |
| | | PP | |
| Sodium benzoate | GL | PVDF | |
| | | PP | |
| Sodium benzoate aqueous | 35 | PVDF | |
| | | PP | |
| Sodium borate hydrogene peroxide (Sodium perborate) | GL | PVDF | |
| | | PP | |
| Sodium bromide | GL | PVDF | |
| | | PP | |
| Sodium carbonate | GL | PVDF | |
| | | PP | |
| Sodium carbonate aqueous | 50 | PVDF | |
| | | PP | |
| Sodium chlorate aqueous | GL | PVDF | |
| | | PP | |
| Sodium chlorite aqueous | 2-20 | PVDF | |
| | | PP | |
| Sodium cyanide | GL | PVDF | |
| | | PP | |
| Sodium dichromate | GL | PVDF | |
| | | PP | |
| Sodium fluoride | GL | PVDF | |
| | | PP | |
| Sodium hexacyanferrat (II) (Sodiumferrocyanide | GL | PVDF | |
| | | PP | |
| Sodium hexacyanferrat (III) (Sodiumferroryanide | GL | PVDF | |
| | | PP | |
| Sodium hexametaphosphate | L | PVDF | |
| | | PP | |
| Sodium hydrogen sulphite (Sodium bisulphite) | L | PVDF | |
| | | PP | |

# APPENDIX D

# POLYPROPYLENE PIPE WARRANTY

ASAHI/AMERICA 1516 Commerce Drive, Elgin, IL 60123-9362 • Tel: (708) 697-8444 • FAX: (708) 697-9160 • (800) 442-7244

November 29, 1990

Mr. Frank Girdwain
AT&T Bell Labs
2000 N. Naperville Road
Naperville, IL 60566-7033

Dear Mr. Girdwain,

This letter is regarding the Acid Waste Project at AT&T Naperville, Illinois. Following is Asahi/America's warranty on Polypropylene Duo Pro system.

Asahi/America, Inc. (Seller) warrants, to the buyer only, that all products delivered hereunder shall be free from defects in design and manufacture for a period of one year from the date of delivery, provided that such products are installed, used, operated, adjusted and serviced only in a proper and appropriate manner and in strict accordance with any instructions relating thereto furnished to Buyer by Seller. In no event shall the foregoing warranty extend to any products in any way caused or allowed to be, or installed, operated or used in such a manner as to be, subject or exposed to conditions of misuse, abuse or accident.

THE FOREGOING WARRANTY IS EXCLUSIVE AND IN LIEU OF ANY AND ALL OTHER WARRANTIES, EXPRESS OR IMPLIED, NO WARRANTY OF MERCHANTABILITY, NO IMPLIED WARRANTY OF FITNESS FOR ANY PARTICULAR PURPOSE, AND NO IMPLIED WARRANTY ARISING BY USAGE OF THE TRADE, COURSE OF DEALING OR COURSE OF PERFORMANCE IS GIVEN BY SELLER OR SHALL ARISE BY OR IN CONNECTION WITH THIS SALE AND/OR THE SELLER'S AND/OR BUYER'S CONDUCT IN RELATION THERETO OR TO EACH OTHER, AND IN NO EVENT SHALL SELLER BE LIABLE ON ANY SUCH WARRANTY WITH RESPECT TO ANY PRODUCT.

Liability of the Seller under or in connection with this sale and/or the foregoing warranty shall be limited, at the sole option of the Seller, to one of repair of, replacement of, or a refund of the purchase price of any products or part thereof (a) with respect to which Seller receives, promptly after Buyer's discovery of any alleged defect and prior to the expiration of the one-year warranty period as provided above, notice from Buyer of Buyer's claim of defect, and (b) which shall be returned to Seller by Buyer, as provided herein, promptly after Buyer's discovery of such alleged defect and which shall be determined by the Seller to have proven defective within the one-year warranty provided above; failure by Buyer so to notify Seller and such products to Seller after Buyer's discovery of such alleged defect shall constitute a waiver by Buyer of any and all claims of any kind with respect thereto. Any products returned by Buyer to Seller under the foregoing terms shall be returned to Seller's place of business freight prepaid, accompanied or preceded by Buyer's particularized statement of the claimed defect. The risk of loss and freight charges to and from Seller in connection with any returned products shall be borne by Buyer; but Seller shall bear such additional freight charges arising in connection with any such returned products ultimately determined by Seller to be defective under the terms of the foregoing warranty, the cost of repair or replacement (if any) of such products, and the risk of loss or damage while such products are in Seller's possession at its place of business. The foregoing remedy shall constitute the sole and exclusive remedy of the Buyer under or in connection with this sale and/or warranty of the Seller. Except as specifically provided herein, Seller shall not be responsible or liable for any costs, expenses or damages of Buyer in connection with any removal, repair or replacement (including any attempts or actions relating thereto) of any allegedly defective products, and no charge or setoff of any kind of Buyer relating thereto shall be made against the Seller without prior and specific written approval of Seller.

**IN NO EVENT SHALL SELLER BE RESPONSIBLE OR LIABLE FOR ANY SPECIAL, INDIRECT, INCIDENTAL OR CONSEQUENTIAL DAMAGES ARISING IN ANY WAY IN CONNECTION WITH ANY PRODUCTS OR THIS SALE.**

The agreement of Seller to sell its products is expressly conditioned upon the Buyer's assent to, and Seller agrees to sell its products only upon, all terms and conditions set forth above and on the face hereof. Buyer's Acceptance of any products provided under this sale shall constitute such assent.

Thank You,

Trish Carey

Trish Carey
Service Manager

TC/rc

# APPENDIX E

# INSTALLER'S CERTIFICATION

HI/AMERICA® 1516 Commerce Drive, Elgin, IL 60123-9362 • Tel: (708) 697-8444 • FAX: (708) 697-9160 • (800) 442-7244

November 29, 1990

Mr. Frank Girdwain
AT&T Bell Laboratories
2000 North Naperville Road
Naperville, Illinois 60566-7033

Dear Mr. Girdwain,

This letter is in regard to the training and inspection of the installation of Asahi/America Duo Pro piping on the AT&T Bell Laboratory project in Naperville, Illinois.

Amazing Construction personnel were formally trained and certified by Dan Anderson on the proper installation techniques of Duo Pro piping. The following pipe fitters were certified:

Jeff Nicholson
Jim McCaffrey
Jeff Smith
Dave Beck
Gene Rio

Mr Anderson repeatedly visited the job site for inspection of installation and field routing of the system as well as on site design changes.

Ken Carey Regional Manager for Asahi/America also inspected completion of the job.

If I can supply you further information please contact me.

Sincerely,

Trish Carey

Trish Carey
Service Manager

TC/rc

# APPENDIX F

# CWST SHOP DRAWINGS

NOTE: 1 INNER TANK CONSTRUCTION: 1/4" CARBON STEEL(ASTM A36)
2 OUTER TANK SHELL CONSTRUCTION: 1/4" CARBON STEEL PL.(ASTM A36)
3 SADDLES ARE SKIP WELDED TO TANK
4 INTERIOR SURFACE PREP. OF INNER TANK: NEAR WHITE BLAST SSPC-SP10
ALL WELDS SHALL BE SMOOTH. CHANNELS AND PIPING SHALL
HAVE A RADIUS WITH NO BURRS.
5 EXTERIOR SURFACE PREP. OF OUTER TANK: NEAR WHITE BLAST SSPC-SP10
6 INTERIOR COATING: LENKOTE 40 SYSTEM AT 35-40 MILS DFT
INSIDE OF PIPES AND MANWAYS SHALL BE LINED ALSO
(DONE BY INDUSTRIAL COATINGS)
7 EXTERIOR COATING: TNEMEC 61 SERIES 6 MILS DFT
8 STRAPS: (2)1/4"x3"Wx20'-6" LG. INCLUDES
1/8"x6"W RUBBER GASKET MATERIL x 15' LG.
9 ANCHOR BOLTS:(4)1" BENT A.B. SEE DETAIL(SUPPLIED BY A&S)

A&S WELDING CO.
DIV OF IPS, INC.
DRAWN BY: JJB DATE: 10-2-90
DWG# LF-95-194-HDW1 REV: 5
COMPANY: LIQUI-FLO
JOB# 13720
DESCRIPTION: 1- 6M GALLON
DOUBLE WALL HORIZ. TANK ON SADDLES
SCALE: NONE AWT: 12400#

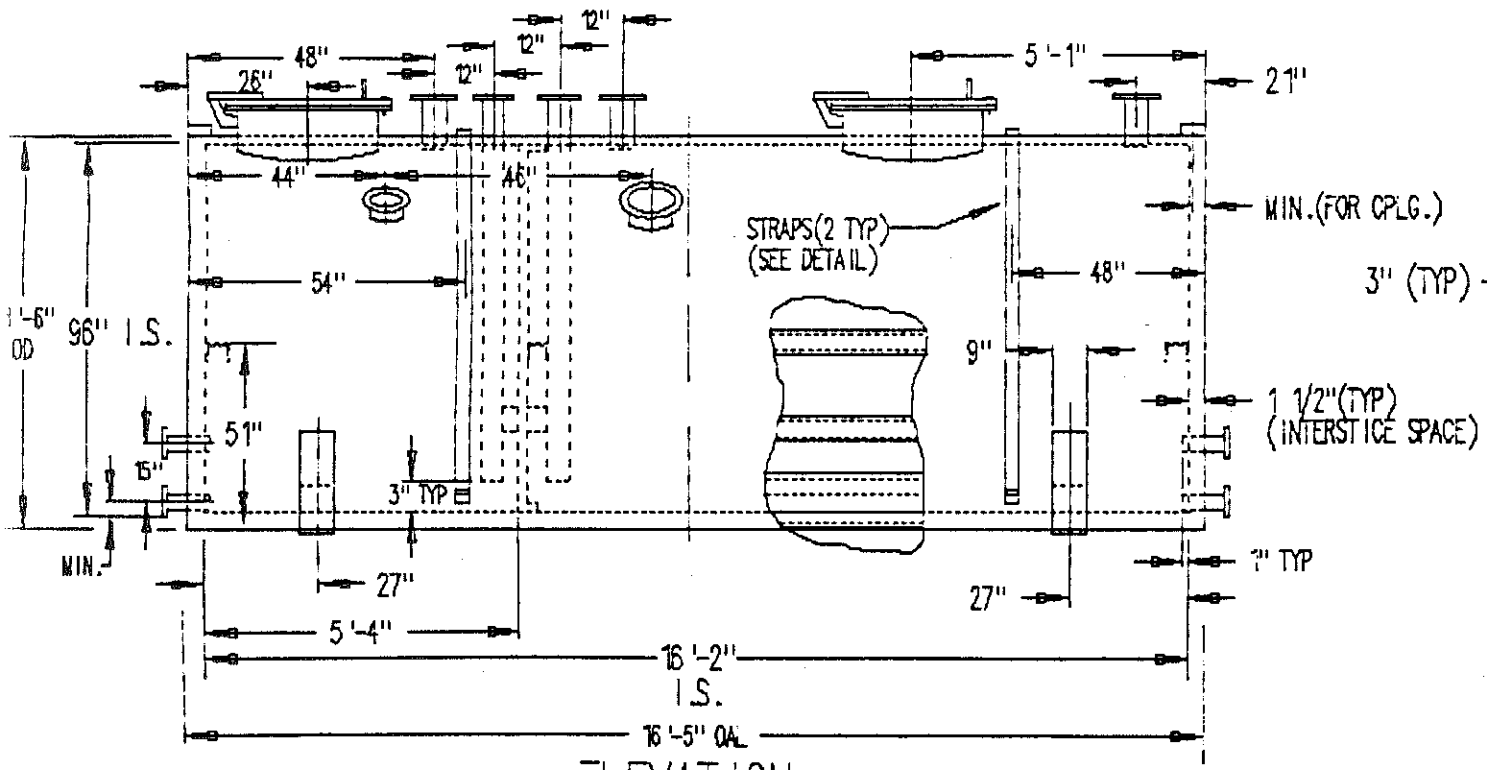


ELEVATION

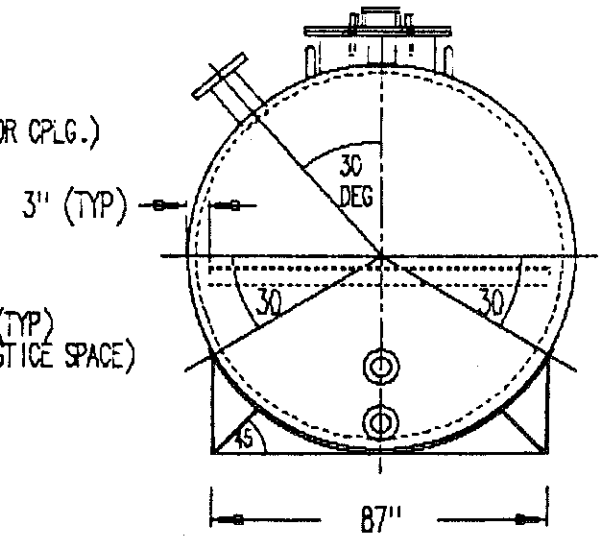


END VIEW

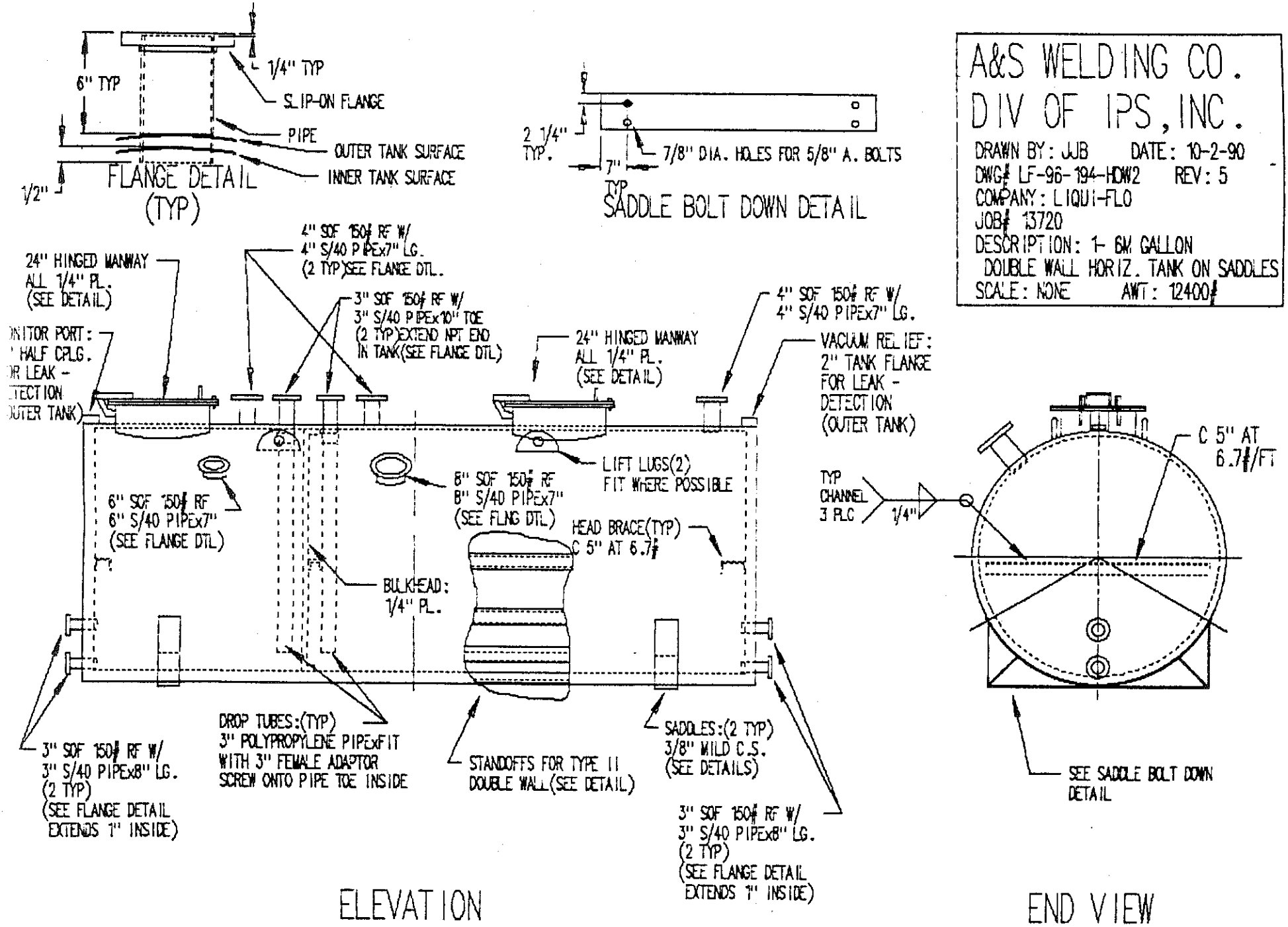
6" TYP
1/4" TYP
SLIP-ON FLANGE
PIPE
OUTER TANK SURFACE
INNER TANK SURFACE
1/2"
FLANGE DETAIL (TYP)
2 1/4" TYP.
7" TYP
7/8" DIA. HOLES FOR 5/8" A. BOLTS
SADDLE BOLT DOWN DETAIL
A&S WELDING CO.
DIV OF IPS, INC.
DRAWN BY: JJB DATE: 10-2-90
DWG# LF-96-194-HDW2 REV: 5
COMPANY: LIQUI-FLO
JOB# 13720
DESCRIPTION: 1- 6M GALLON
DOUBLE WALL HORIZ. TANK ON SADDLES
SCALE: NONE AWT: 12400#
24" HINGED MANWAY
ALL 1/4" PL.
(SEE DETAIL)
4" SOF 150# RF W/
4" S/40 PIPEx7" LG.
(2 TYP)SEE FLANGE DTL.
3" SOF 150# RF W/
3" S/40 PIPEx10" TOE
(2 TYP)EXTEND NPT END
IN TANK(SEE FLANGE DTL)
24" HINGED MANWAY
ALL 1/4" PL.
(SEE DETAIL)
4" SOF 150# RF W/
4" S/40 PIPEx7" LG.
VACUUM RELIEF:
2" TANK FLANGE
FOR LEAK -
DETECTION
(OUTER TANK)
LIFT LUGS(2)
FIT WHERE POSSIBLE
6" SOF 150# RF
6" S/40 PIPEx7"
(SEE FLANGE DTL)
8" SOF 150# RF
8" S/40 PIPEx7"
(SEE FLNG DTL)
HEAD BRACE(TYP)
C 5" AT 6.7#
BULKHEAD:
1/4" PL.
3" SOF 150# RF W/
3" S/40 PIPEx8" LG.
(2 TYP)
(SEE FLANGE DETAIL
EXTENDS 1" INSIDE)
DROP TUBES:(TYP)
3" POLYPROPYLENE PIPExFIT
WITH 3" FEMALE ADAPTOR
SCREW ONTO PIPE TOE INSIDE
STANDOFFS FOR TYPE II
DOUBLE WALL(SEE DETAIL)
SADDLES:(2 TYP)
3/8" MILD C.S.
(SEE DETAILS)
3" SOF 150# RF W/
3" S/40 PIPEx8" LG.
(2 TYP)
(SEE FLANGE DETAIL
EXTENDS 1" INSIDE)
ELEVATION
TYP
CHANNEL
3 PLC
1/4"
C 5" AT
6.7#/FT
SEE SADDLE BOLT DOWN
DETAIL
END VIEW

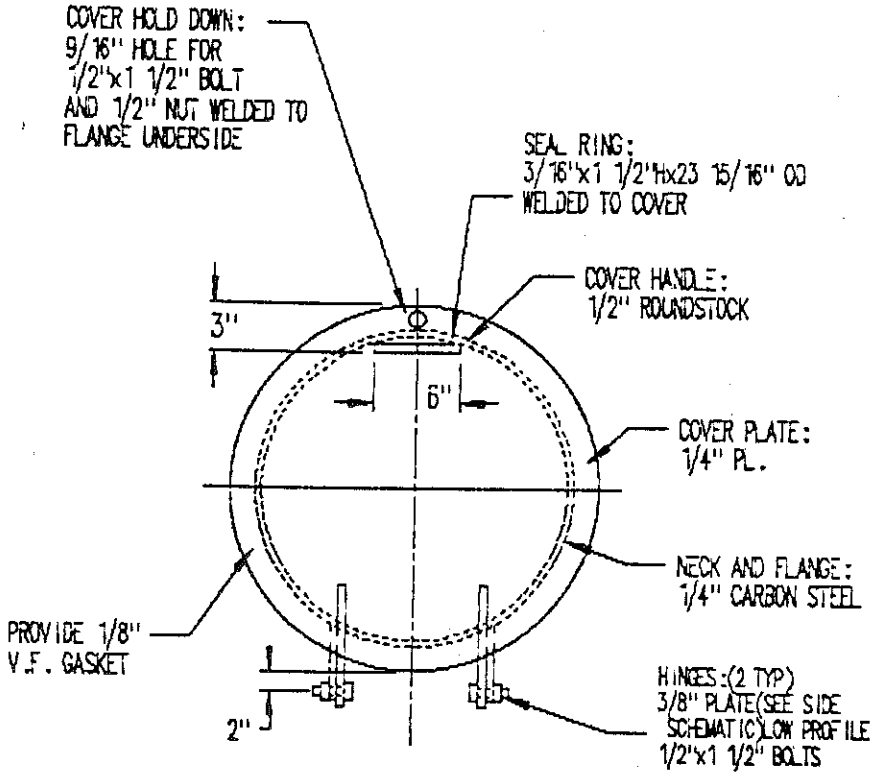


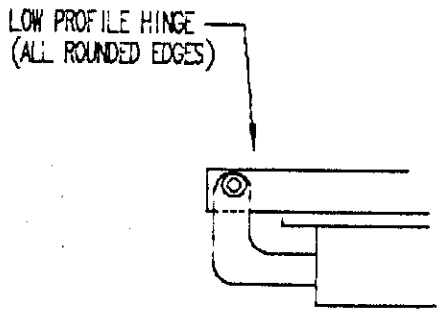


SIDE SCHEMATIC

A&S WELDING CO.
DIV OF IPS, INC.
DRAWN BY: JJB DATE: 10-2-90
DWG# LF-96-194-HDW3 REV: 5
COMPANY: LIQUI-FLO
JOB# 13720
DESCRIPTION: 1- 6W GALLON DOUBLE
WALL HORIZ. TANK ON SADDLES
SCALE: NONE WT: 12400#

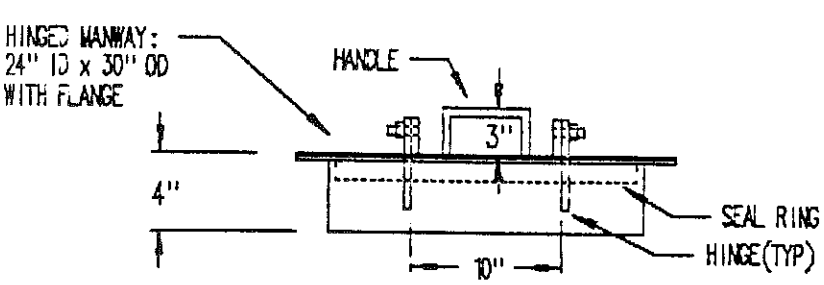


MANWAY COVER DETAIL

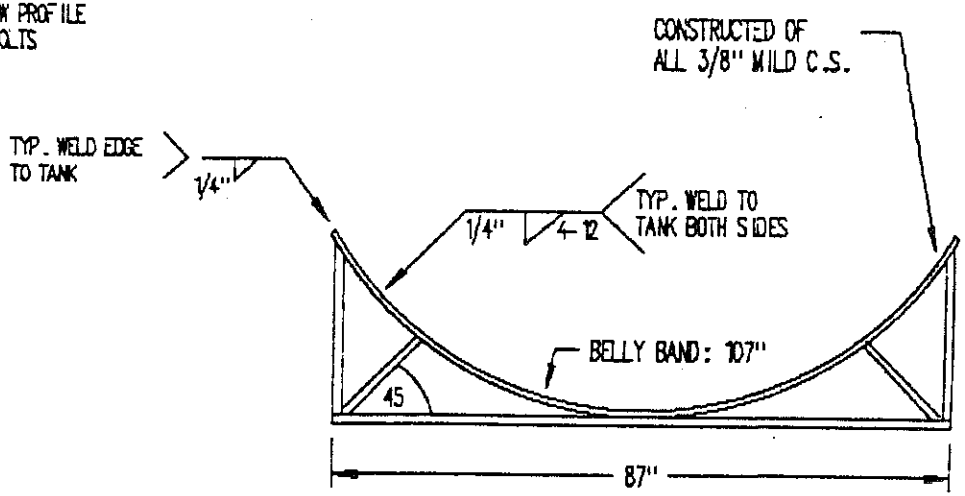


SADDLE DETAIL

A&S WELDING CO.
DIV OF IPS, INC.

DRAWN BY: JJB DATE: 10-2-90
DWG# LF-96-194-HDW4 REV: 5
COMPANY: LIQUI-FLOW
JOB# 13720
DESCRIPTION: STRAP/A. BOLT DETAIL
FOR 6M HORIZ. D.W. STORAGE TANK
SCALE: NONE AWT: #

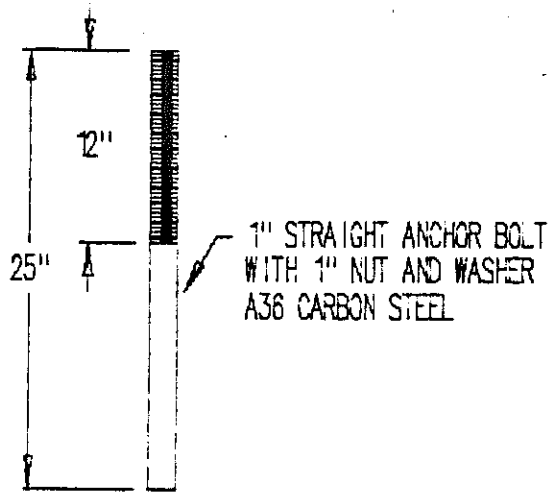


ANCHOR BOLT DETAIL

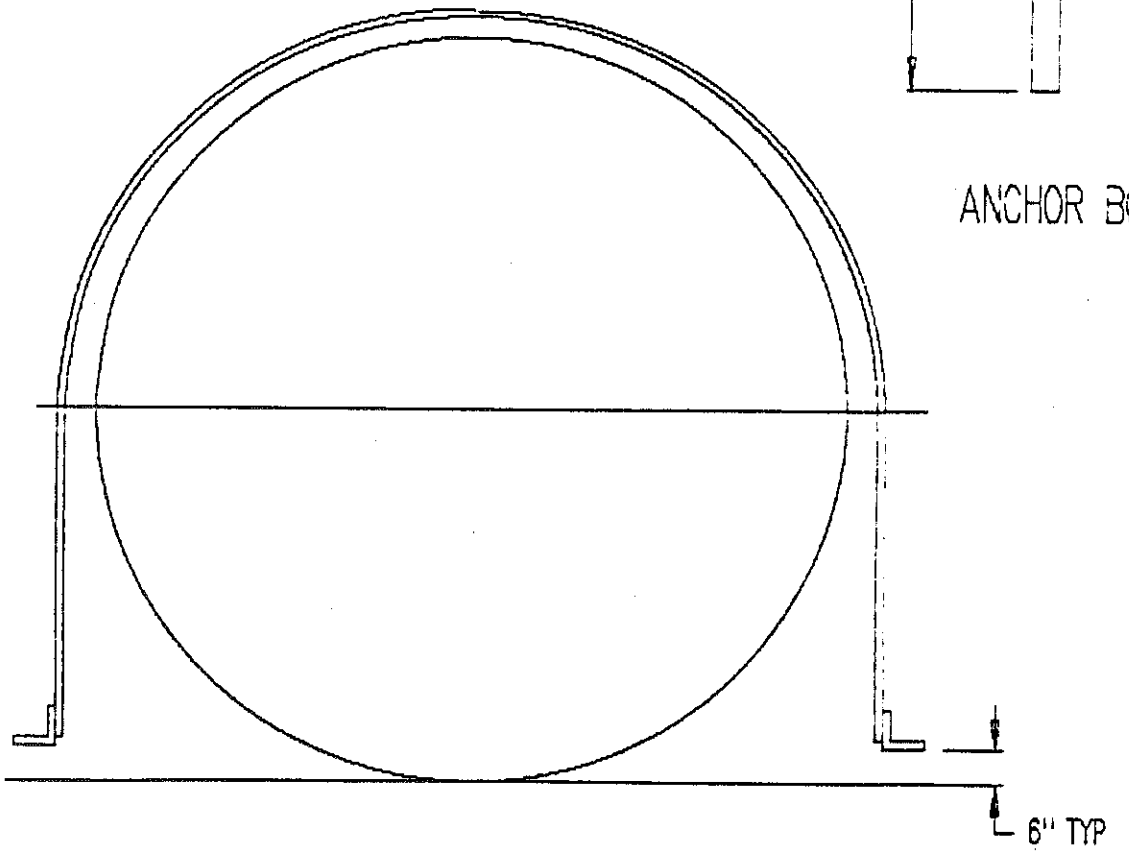


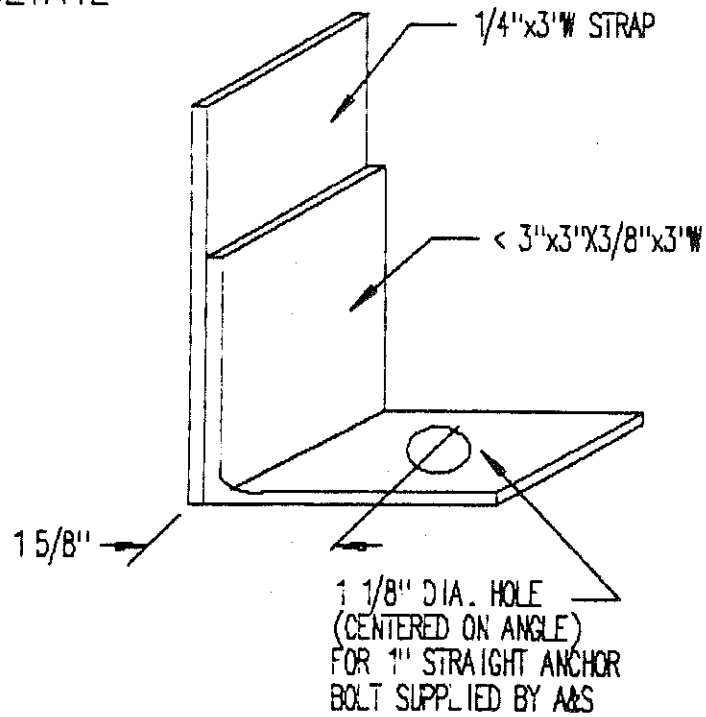


# STRAP DETAILS

A&S WELDING CO.
DIV OF IPS, INC.

DRAWN BY: JJB DATE: 10-2-90
DWG# LF-96-194-HDW5 REV: 5
COMPANY: LIQUI-FLO
JOB# 13720
DESCRIPTION: BRACKET DETAIL FOR DIP PIPES D.W. D.C. HORIZ. TANK
SCALE: NONE AWT: #

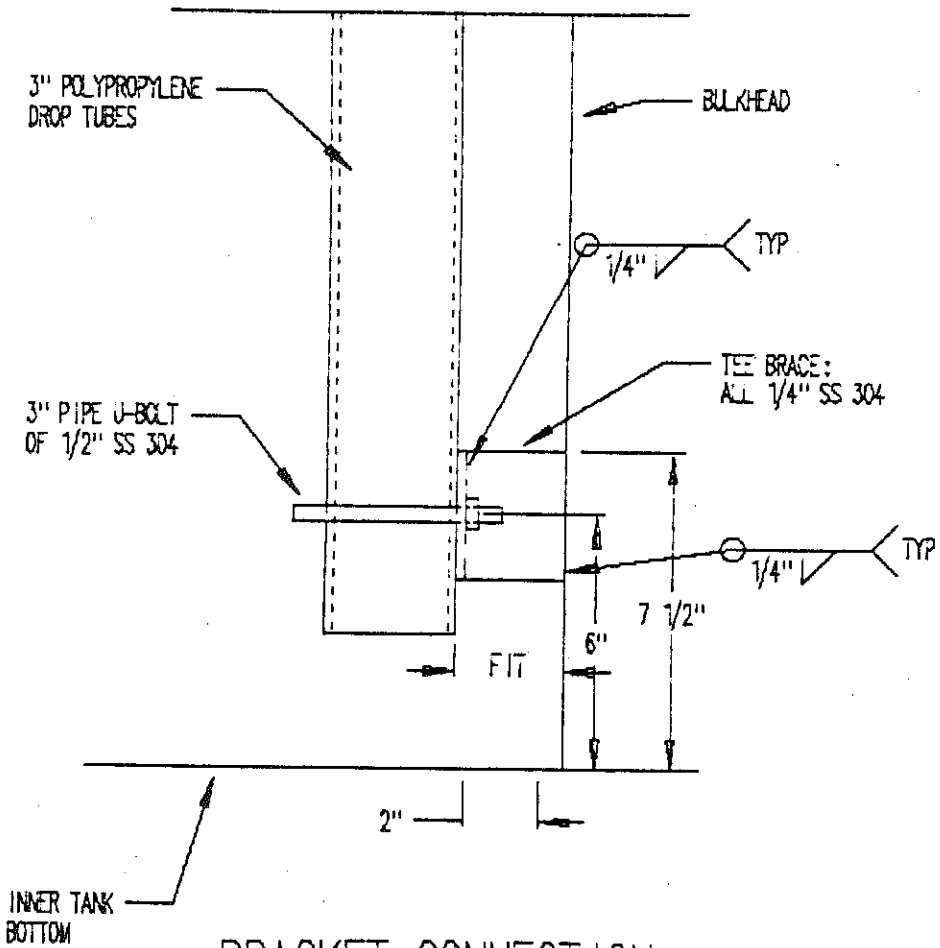


BRACKET CONNECTION FOR DIP PIPE

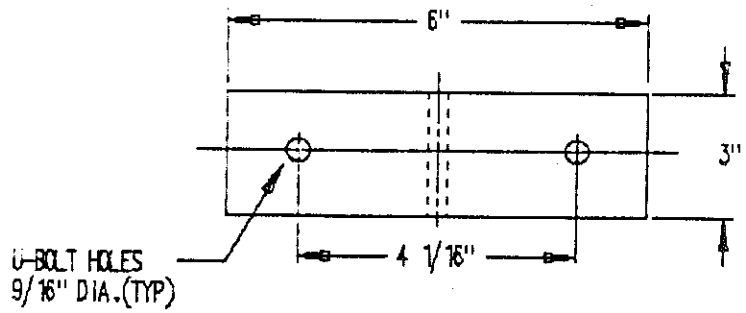


BRACKET DETAIL

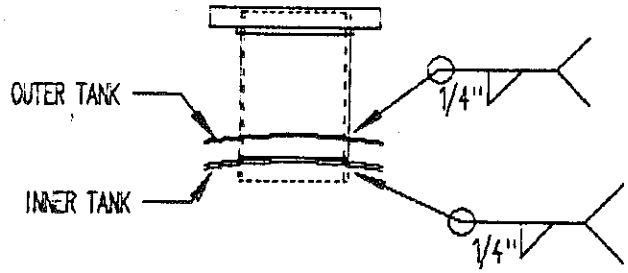


TYPICAL NOZZLE(AND MANWAY)
TO TANK CONNECTION DETAIL

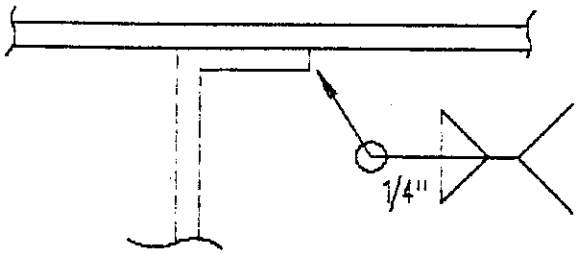


BULKHEAD TO INNER HEAD
CONNECTION DETAIL

A&S WELDING CO.
DIV OF IPS, INC.

DRAWN BY: JJB DATE: 10-2-90
DWG# LF-96-194-HDW6 REV: 5
COMPANY: LIQUI-FLO
JOB# 13720
DESCRIPTION: 1- 6M GALLON
DOUBLE WALL HORIZ. TANK ON SADDLES
SCALE: NONE AWT: 12400#

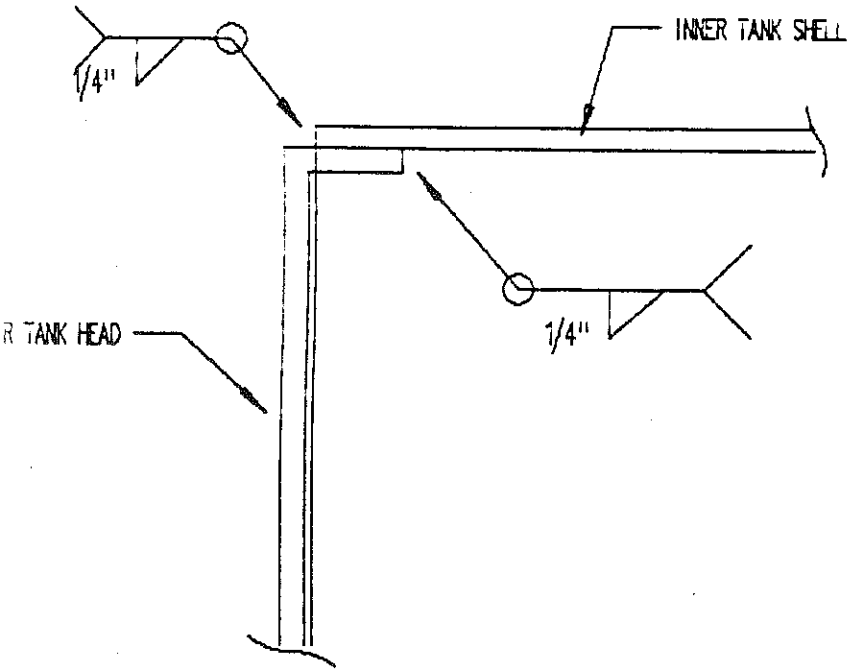


INNER HEAD TO SHELL
CONNECTION DETAIL

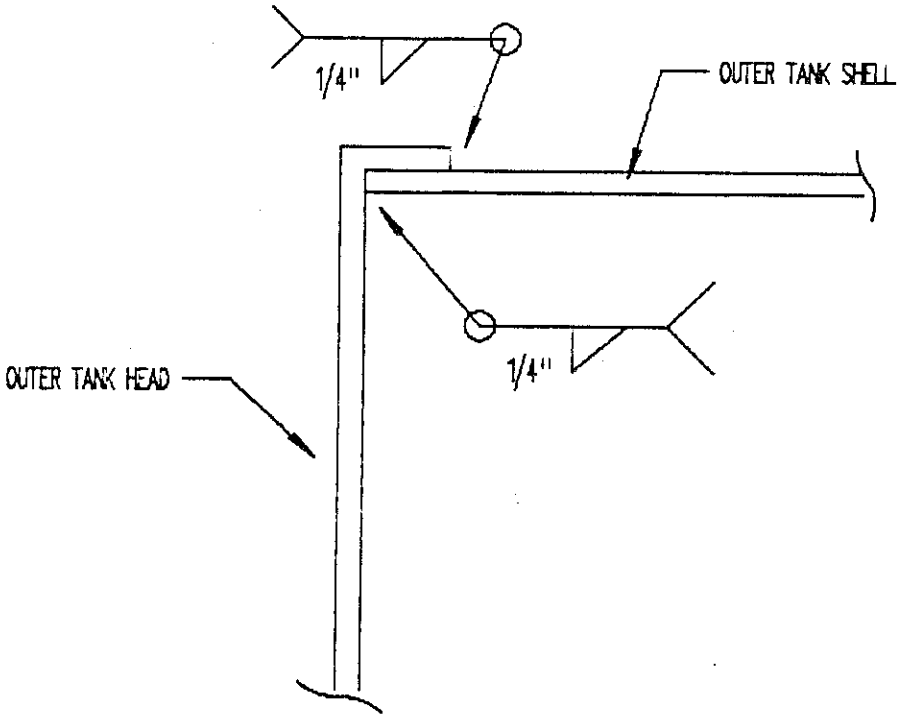


OUTER HEAD TO SHELL
CONNECTION DETAIL

NOTE: 20 DEG IS EQUAL TO A TAPING OF 17 1/2"

A&S WELDING CO.
DIV OF IPS, INC.

DRAWN BY: JJB DATE: 10-2-90
DWG# LF-96-194-HDW7 REV: 5
COMPANY: LIQUI-FLO
JOB# 13720
DESCRIPTION: 1- 6M GALLON
DOUBLE WALL HORIZ. TANK ON SADDLES
SCALE: NONE AWT: 12400#

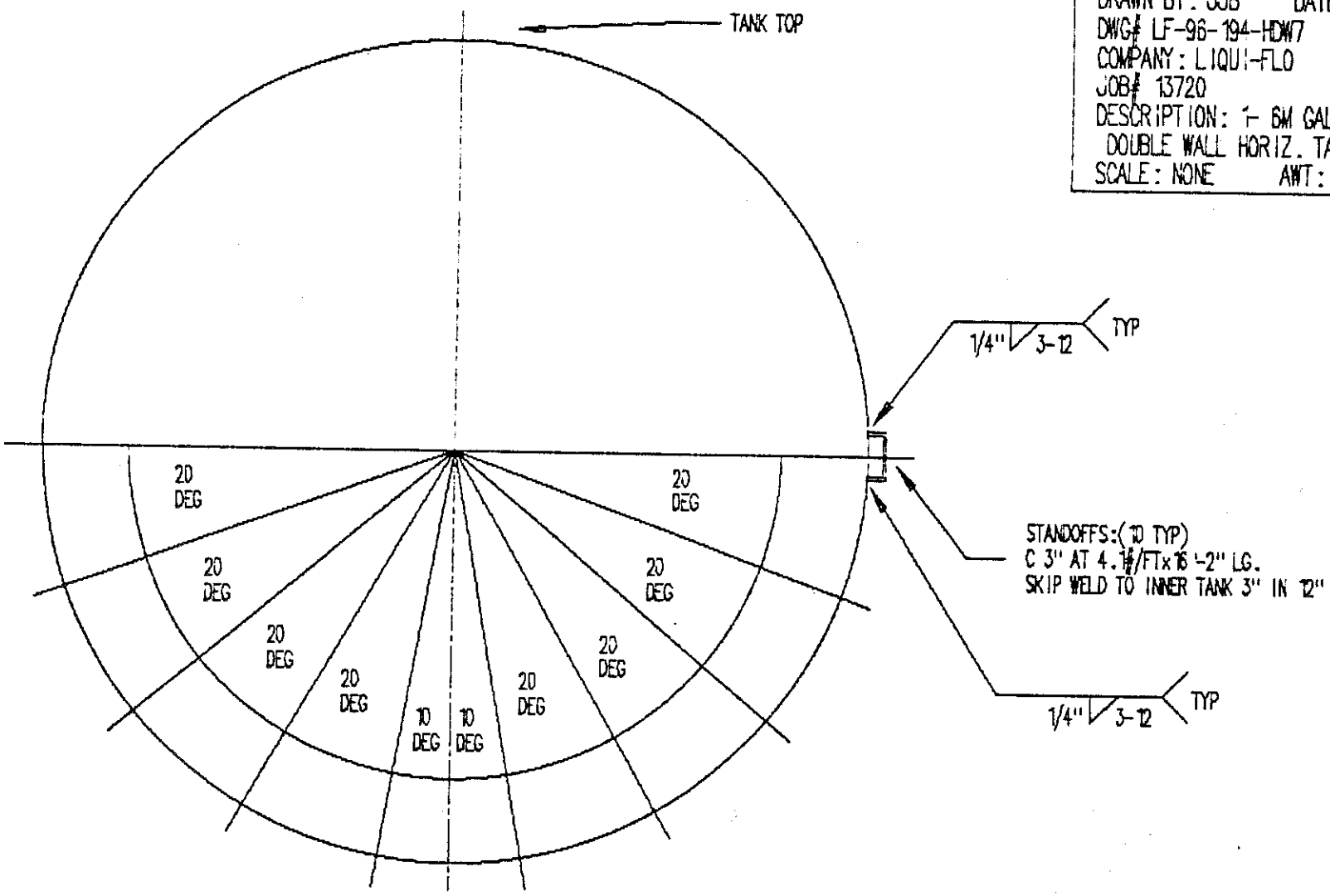


STANDOFF LAYOUT DETAIL

# APPENDIX G

## CWST WARRANTY/WELD INSPECTION AND CERTIFICATION

INTERNATIONAL PRODUCTION SPECIALISTS

35006 WASHINGTON AVENUE • P.O. BOX 117 • HONEY CREEK, WISCONSIN 53138
PHONE: (414) 534-3130 FAX: (414) 534-4748

BULK MATERIAL HANDLING EQUIPMENT STORAGE VESSELS STI-P3 MEMBER

November 15, 1990

International Production Specialists, Inc. warrants to AT & T Bell Labs. that the 6,000 gallon storage tanks conforms to specifications and is free from defects in material and/or workmanship for one (1) year from the date of delivery.* During the warranty period I.P.S. will correct any defect in the tank or tank lining due to failure in material or workmanship at no charge for labor and materials. AT & T must notify I.P.S. in writing of any system failures prior to the expiration of the warranty period.

This warranty covers normal usage and does not warrant or cover:

1. Damage during shipment.
2. Damage caused by a natural disaster.
3. Damage caused by unauthorized alterations or modifications.
4. Damage caused by other abuse, misuse or misapplication.

*Delivery and acceptance by AT & T.

Amy Van

Amy Van - I.P.S.

QW-484 SUGGESTED FORMAT FOR MANUFACTURER'S RECORD OF WELDER OR WELDING OPERATOR QUALIFICATION TESTS

(See QW-301, Section IX, ASME Boiler and Pressure Vessel Code)

Welder Name MATT WATKINS Check No. 095-40-8617 Stamp No. _____

Using WPS No. 70 Rev. 0

the above welder is qualified for the following ranges.

| Variable | Record Actual Values Used in Qualification | Qualification Range |
|---|---|---|
| Process | SMAW | SMAW |
| Process Type | | |
| Backing (metal, weld metal, flux, etc. (QW-402)) | WELD METAL | WELD METAL |
| Material Spec. (QW-403) | P1 to P1 | P1 to P1 |
| Thickness | | |
| Groove | 1/4" | 1/16" - 1/8" |
| Fillet | — | — |
| Diameter | | |
| Groove | — | — |
| Fillet | — | — |
| Filler Metal (QW-404) | | |
| Spec. No. | 5.1 | 5.1 |
| Class | A1 | A1 |
| F-No. | F4 | F1 - F4 |
| Position (QW-405) | 1G FLAT | 1G FLAT |
| Weld Progression (QW-410) | — | — |
| Gas Type (QW-408) | — | — |
| Electrical Characteristics (QW-409) | | |
| Current | D.C. | D.C./A.C. |
| Polarity | REVERSE | REVERSE |

Guided Bend Test Results QW-462.2(a), QW-462.3(a), QW-462.3(b)

| Type and Fig. No. | Result |
|---|---|
| | |
| | |
| | |
| | |

Radiographic Test Results (QW-304 & QW-305)

For alternative qualification of groove welds by radiography

Radiographic Results: ACCEPTABLE ASME Sec IX

Fillet Weld Test Results [See QW-462.4(a), QW-462.4(b)]

Fracture Test (Describe the location, nature and size of any crack or tearing of the specimen) _____

Length and Per Cent of Defects _____ inches _____ %

Macro Test—Fusion _____

Appearance—Fillet Size (leg) _____ in. X _____ in. Convexity _____ in. or Concavity _____ in.

Test Conducted by JEFF Bell Laboratory—Test No. NDT SPECIALISTS INC

We certify that the statements in this record are correct and that the test welds were prepared, welded and tested in accordance with the requirements of Sections IX of the ASME Code.

Organization NDT SPECIALIST INC.

Date 6/28/90

By [signature]

(Detail of record of tests are illustrative only and may be modified to conform to the type and number of tests required by the Code.)

NOTE: Any essential variables in addition to those above shall be recorded.

This form (E00008) may be obtained from the Order Dept., ASME, 345 E. 47 St., New York, N.Y. 1001

QW-484 SUGGESTED FORMAT FOR MANUFACTURER'S RECORD OF WELDER OR WELDING OPERATOR QUALIFICATION TESTS

(See QW-301, Section IX, ASME Boiler and Pressure Vessel Code)

Welder Name Dave Theelkeld Check No. 392-70-7324 Stamp No.

Using WPS No. 7018 Rev. 0

the above welder is qualified for the following ranges.

| Variable | Record Actual Values Used in Qualification | Qualification Range |
|---|---|---|
| Process | SMAW | SMAW |
| Process Type | N/A | — |
| Backing (metal, weld metal, flux, etc. (QW-402)) | WELD METAL | WELD METAL |
| Material Spec. (QW-403) | P1 to P1 | P1 to P1 |
| Thickness | | |
| Groove | 1/4" | 1/16" - 1/2" |
| Fillet | N/A | — |
| Diameter | | |
| Groove | N/A | — |
| Fillet | N/A | — |
| Filler Metal (QW-404) | | |
| Spec. No. | 5.1 | 5.1 |
| Class | A-1 | A-1 |
| F-No. | F-4 | F-4 |
| Position (QW-405) | 1-G FLAT | 1-G FLAT |
| Weld Progression (QW-410) | N/A | — |
| Gas Type (QW-408) | N/A | — |
| Electrical Characteristics (QW-409) | | |
| Current | D.C. | D.C. |
| Polarity | REVERSE | REVERSE |

Guided Bend Test Results QW-462.2(a), QW-462.3(a), QW-462.3(b)

| Type and Fig. No. | Result |
|---|---|
| | |
| | |
| | |
| | |
| | |

Radiographic Test Results (QW-304 & QW-305)

For alternative qualification of groove welds by radiography

Radiographic Results: ACCEPTABLE SEE ATTACHED R.T. REPORT

Fillet Weld Test Results (See QW-462.4(a), QW-462.4(b))

Fracture Test (Describe the location, nature and size of any crack or tearing of the specimen)

Length and Per Cent of Defects _____ inches _____ %

Macro Test—Fusion

Appearance—Fillet Size (leg) _____ in. X _____ in. Convexity _____ in. or Concavity _____ in.

Test Conducted by Laurence J. Schrecke Jr. Laboratory—Test No. NDT SPECIALISTS INC.

We certify that the statements in this record are correct and that the test welds were prepared, welded and tested in accordance with the requirements of Sections IX of the ASME Code.

Organization NDT SPECIALISTS INC

Date 5/17/90

By Laurence J. Schrecke

(Detail of record of tests are illustrative only and may be modified to conform to the type and number of tests required by the Code.)

NOTE: Any essential variables in addition to those above shall be recorded.

(6/82)

This form (E00008) may be obtained from the Order Dept., ASME, 345 E. 47 St., New York, N.Y. 1001

QW-484 SUGGESTED FORMAT FOR MANUFACTURER'S RECORD OF WELDER OR WELDING OPERATOR QUALIFICATION TESTS

(See QW-301, Section IX, ASME Boiler and Pressure Vessel Code)

Name LARRY CLARKE Check No. 310-48-1357 Stamp No.

Using WPS No. 7018 Rev. 0,

the above welder is qualified for the following ranges.

| Variable | Record Actual Values: Used in Qualification | Qualification Range |
|---|---|---|
| Process | SMAW | SMAW |
| Process Type | | |
| Backing (metal, weld metal, flux, etc. (QW-402)) | WELD METAL | WELD METAL |
| Material Spec. (QW-403) | P1 to P1 | P1 to P1 |
| Thickness | 1/4" | 1/16" - 1/2" |
| Groove | N/A | — |
| Fillet | | |
| Diameter | | |
| Groove | N/A | — |
| Fillet | N/A | — |
| Filler Metal (QW-404) | | |
| Spec. No. | 5.1 | 5.1 |
| Class | A-1 | A1 |
| F-No. | F-4 | F1 - F4 |
| Position (QW-405) | 1G FLAT | 1G FLAT |
| Weld Progression (QW-410) | | |
| Gas Type (QW-408) | NA | |
| Electrical Characteristics (QW-409) | | |
| Current | D.C | D.C. / AC |
| Polarity | REVERSE | REVERSE |

Guided Bend Test Results QW-462.2(a), QW-462.3(a), QW-462.3(b)

| Type and Fig. No. | Result |
|---|---|
| | |

Radiographic Test Results (QW-304 & QW-305)

For alternative qualification of groove welds by radiography

Radiographic Results: ACCEPTABLE

Fillet Weld Test Results (See QW-462.4(a), QW-462.4(b))

Fracture Test (Describe the location, nature and size of any crack or tearing of the specimen)

Length and Per Cent of Defects _____ inches _____ %

Macro Test—Fusion

Appearance—Fillet Size (leg) _____ in. X _____ in. Convexity _____ in. or Concavity _____ in.

Test Conducted by Laurence J. LeBrun Sr Laboratory—Test No. NDT SPECIALISTS INC

We certify that the statements in this record are correct and that the test welds were prepared, welded and tested in accordance with the requirements of Sections IX of the ASME Code.

Organization NDT SPECIALISTS INC.

4/11/90

By Laurence J. LeBrun Sr

(Detail of record of tests are illustrative only and may be modified to conform to the type and number of tests required by the Code.)

NOTE: Any essential variables in addition to those above shall be recorded.



This form (E00009) may be obtained from the Order Dept., ASME, 345 E. 47 St., New York, N.Y. 1001

QW-484 SUGGESTED FORMAT FOR MANUFACTURER'S RECORD OF WELDER OR WELDING OPERATOR QUALIFICATION TESTS

(See QW-301, Section IX, ASME Boiler and Pressure Vessel Code)

Welder Name Jordan Ko'Pac II Check No. 396-90-5956 Stamp No. _____

Using WPS No. 7018 Rev. 0,

the above welder is qualified for the following ranges.

| Variable | Record Actual Values Used in Qualification | Qualification Range |
|---|---|---|
| Process | SMAW | SMAW |
| Process Type | | |
| Backing (metal, weld metal, flux, etc. (QW-402)) | WELD METAL | WELD METAL |
| Material Spec. (QW-403) | P1 to P1 | P1 to P1 |
| Thickness | | |
| Groove | 1/4" | 1/16" - 1/2" |
| Fillet | — | — |
| Diameter | | |
| Groove | — | — |
| Fillet | — | — |
| Filler Metal (QW-404) | | |
| Spec. No. | 5.1 | 5.1 |
| Class | A-1 | A-1 |
| F-No. | F4 | F1-F4 |
| Position (QW-405) | 1G FLAT | 1G FLAT |
| Weld Progression (QW-410) | — | — |
| Gas Type (QW-408) | — | — |
| Electrical Characteristics (QW-409) | | |
| Current | D.C | D.C. / A.C. |
| Polarity | Reverse | Reverse |

Guided Bend Test Results QW-462.2(a), QW-462.3(a), QW-462.3(b)

| Type and Fig. No. | Result |
|---|---|
| | |
| | |
| | |
| | |

Radiographic Test Results (QW-304 & QW-305)

For alternative qualification of groove welds by radiography

Radiographic Results: ACCEPTABLE ASME Sec IX

Fillet Weld Test Results (See QW-462.4(a), QW-462.4(b))

Fracture Test (Describe the location, nature and size of any crack or tearing of the specimen) _____

Length and Per Cent of Defects _____ Inches _____ %

Macro Test—Fusion _____

Appearance—Fillet Size (leg) _____ in. X _____ in. Convexity _____ in. or Concavity _____ in.

Test Conducted by Laurence J. Schuchert Laboratory—Test No. NDT SPECIALISTS INC.

We certify that the statements in this record are correct and that the test welds were prepared, welded and tested in accordance with the requirements of Sections IX of the ASME Code.

Organization NDT SPECIALISTS INC

Date 6/28/90

By L J Schuchert III

(Detail of record of tests are illustrative only and may be modified to conform to the type and number of tests required by the Code.)

NOTE: Any essential variables in addition to those above shall be recorded.

This form (E00008) may be obtained from the Order Dept., ASME, 345 E. 47 St., New York, N.Y. 100

QW-484 SUGGESTED FORMAT FOR MANUFACTURER'S RECORD OF WELDER OR WELDING OPERATOR

## QUALIFICATION TESTS

(See QW-301, Section IX, ASME Boiler and Pressure Vessel Code)

Welder Name Jordan Kopac II Check No. 396-90-5956 Stamp No.

Using WPS No. 7018 Rev. 0,

the above welder is qualified for the following ranges.

| Variable | Record Actual Values Used in Qualification | Qualification Range |
|---|---|---|
| Process | SMAW | SMAW |
| Process Type | | |
| Backing (metal, weld metal, flux, etc. (QW-402)) | WELD METAL | WELD METAL |
| Material Spec. (QW-403) | P1 to P1 | P1 to P1 |
| Thickness | | |
| Groove | 1/4" | 1/16" - 1/2" |
| Fillet | — | — |
| Diameter | | |
| Groove | — | — |
| Fillet | — | — |
| Filler Metal (QW-404) | | |
| Spec. No. | 5.1 | 5.1 |
| Class | A-1 | A-1 |
| F-No. | F4 | F1-F4 |
| Position (QW-405) | 1G FLAT | 1G FLAT |
| Weld Progression (QW-410) | — | — |
| Gas Type (QW-408) | — | — |
| Electrical Characteristics (QW-409) | | |
| Current | D.C | D.C. / A.C. |
| Polarity | Reverse | Reverse |

Guided Bend Test Results QW-462.2(a), QW-462.3(a), QW-462.3(b)

| Type and Fig. No. | Result |
|---|---|
| | |
| | |
| | |
| | |

Radiographic Test Results (QW-304 & QW-305)

For alternative qualification of groove welds by radiography

Radiographic Results: ACCEPTABLE ASME Sec IX

Fillet Weld Test Results (See QW-462.4(a), QW-462.4(b))

Fracture Test (Describe the location, nature and size of any crack or tearing of the specimen)

Length and Per Cent of Defects _____ Inches _____ %

Macro Test—Fusion _____

Appearance—Fillet Size (leg) _____ in. X _____ in. Convexity _____ in. or Concavity _____ in.

Test Conducted by Laurence J. Schuchert Laboratory—Test No. NDT SPECIALISTS INC.

We certify that the statements in this record are correct and that the test welds were prepared, welded and tested in accordance with the requirements of Sections IX of the ASME Code.

Organization NDT SPECIALISTS INC

Date 6/28/90 By L J Schuchert III

(Detail of record of tests are illustrative only and may be modified to conform to the type and number of tests required by the Code.)

NOTE: Any essential variables in addition to those above shall be recorded.

This form (E00008) may be obtained from the Order Dept., ASME, 345 E. 47 St., New York, N.Y. 1001

NOTE: 1 ...ER TANK CONSTRUCTION: 1/4" CARBON STEEL(ASTM A36)
2 OUTER TANK SHELL CONSTRUCTION: 1/4" CARBON STEEL PL.(ASTM A36)
3 SADDLES ARE SKIP WELDED TO TANK
4 INTERIOR SURFACE PREP. OF INNER TANK: NEAR WHITE BLAST SSPC-SP10
ALL WELDS SHALL BE SMOOTH. CHANNELS AND PIPING SHALL HAVE A RADIUS WITH NO BURRS.
5 EXTERIOR SURFACE PREP. OF OUTER TANK: NEAR WHITE BLAST SSPC-SP10
6 INTERIOR COATING: LENKOTE 40 SYSTEM AT 35-40 MILS DFT
INSIDE OF PIPES AND MANWAYS SHALL BE LINED ALSO
(DONE BY INDUSTRIAL COATINGS)
7 EXTERIOR COATING: TNEMEC 61 SERIES 6 MILS DFT
8 STRAPS: (2)1/4"x3"Wx20'-6" LG. INCLUDES
1/8"x6"W RUBBER GASKET MATERIL x 15' LG.
9 ANCHOR BOLTS:(4)1" BENT A.B. SEE DETAIL(SUPPLIED BY A&S)

A&S WELDING CO.
DIV OF IPS, INC.
DRAWN BY: JJB DATE: 10-2-90
DWG# LF-95-194-HDW1 REV: 5
COMPANY: LIQUI-FLO
JOB# 13720
DESCRIPTION: 1- 6M GALLON
DOUBLE WALL HORIZ. TANK ON SADDLES
SCALE: NONE AWT: 12400#

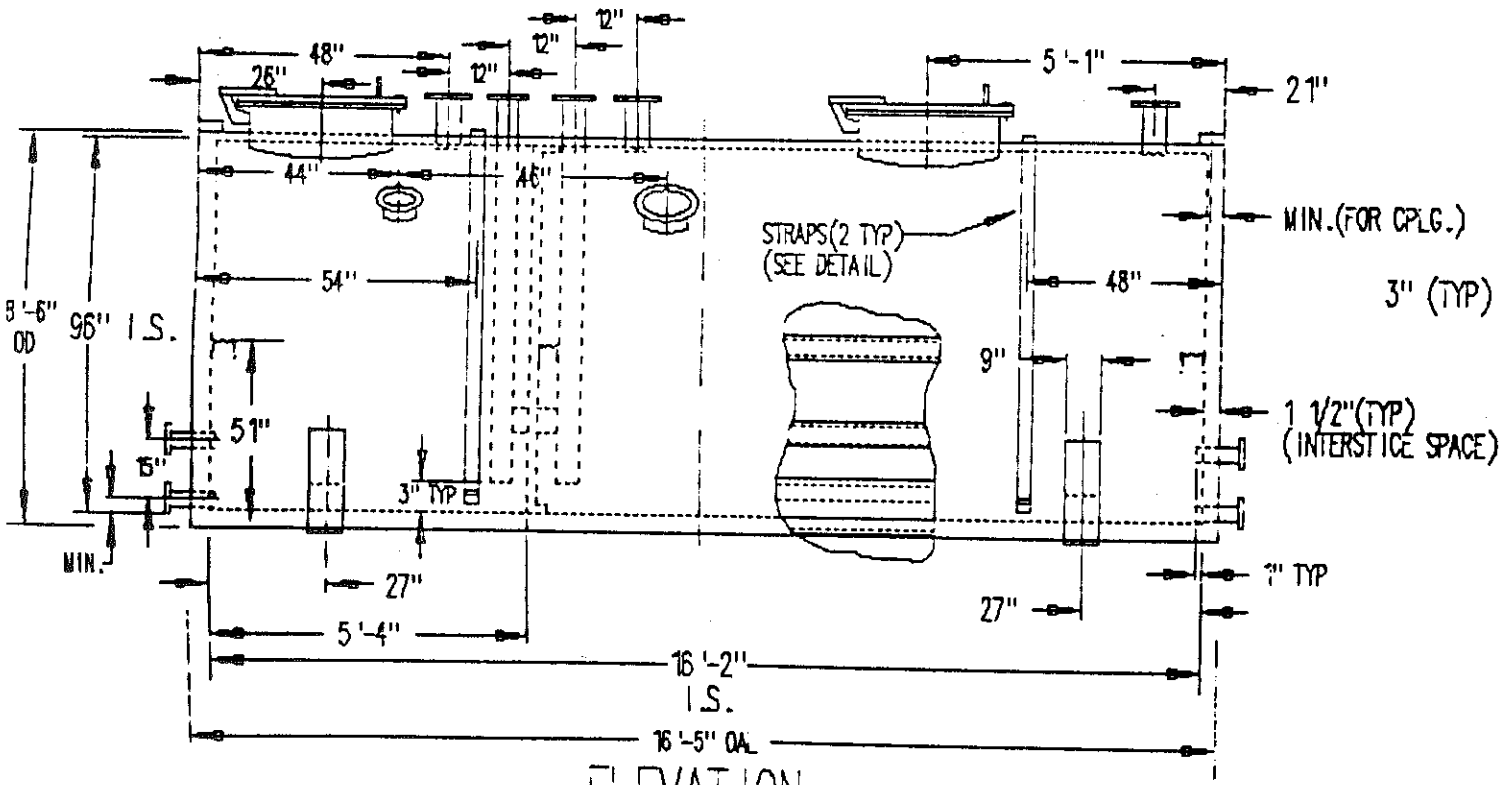


ELEVATION

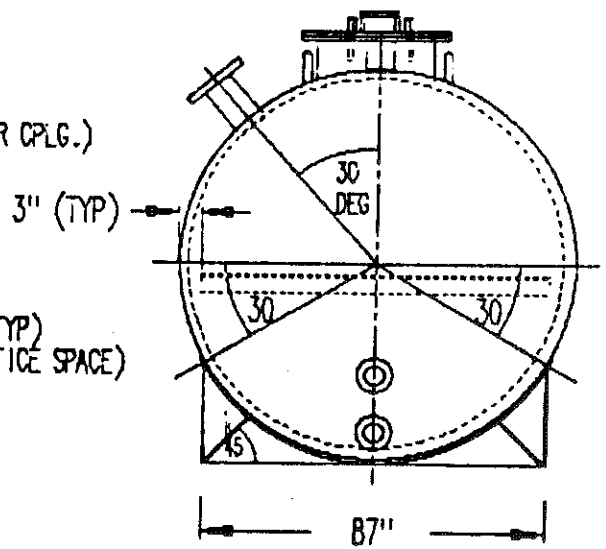


END VIEW

A&S WELDING CO.
DIV OF IPS, INC.

DRAWN BY: JJB DATE: 10-2-90
DWG# LF-96-194-HDW2 REV: 5
COMPANY: LIQUI-FLO
JOB# 13720
DESCRIPTION: 1- 6M GALLON
DOUBLE WALL HORIZ. TANK ON SADDLES
SCALE: NONE AWT: 12400#

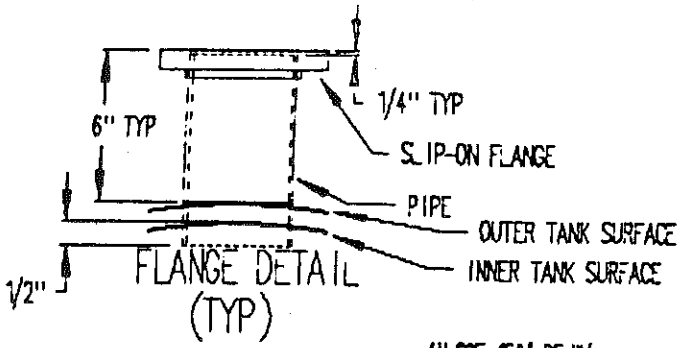

FLANGE DETAIL (TYP)

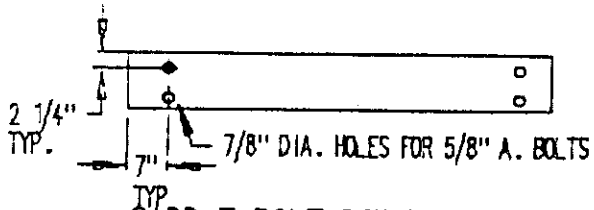

SADDLE BOLT DOWN DETAIL

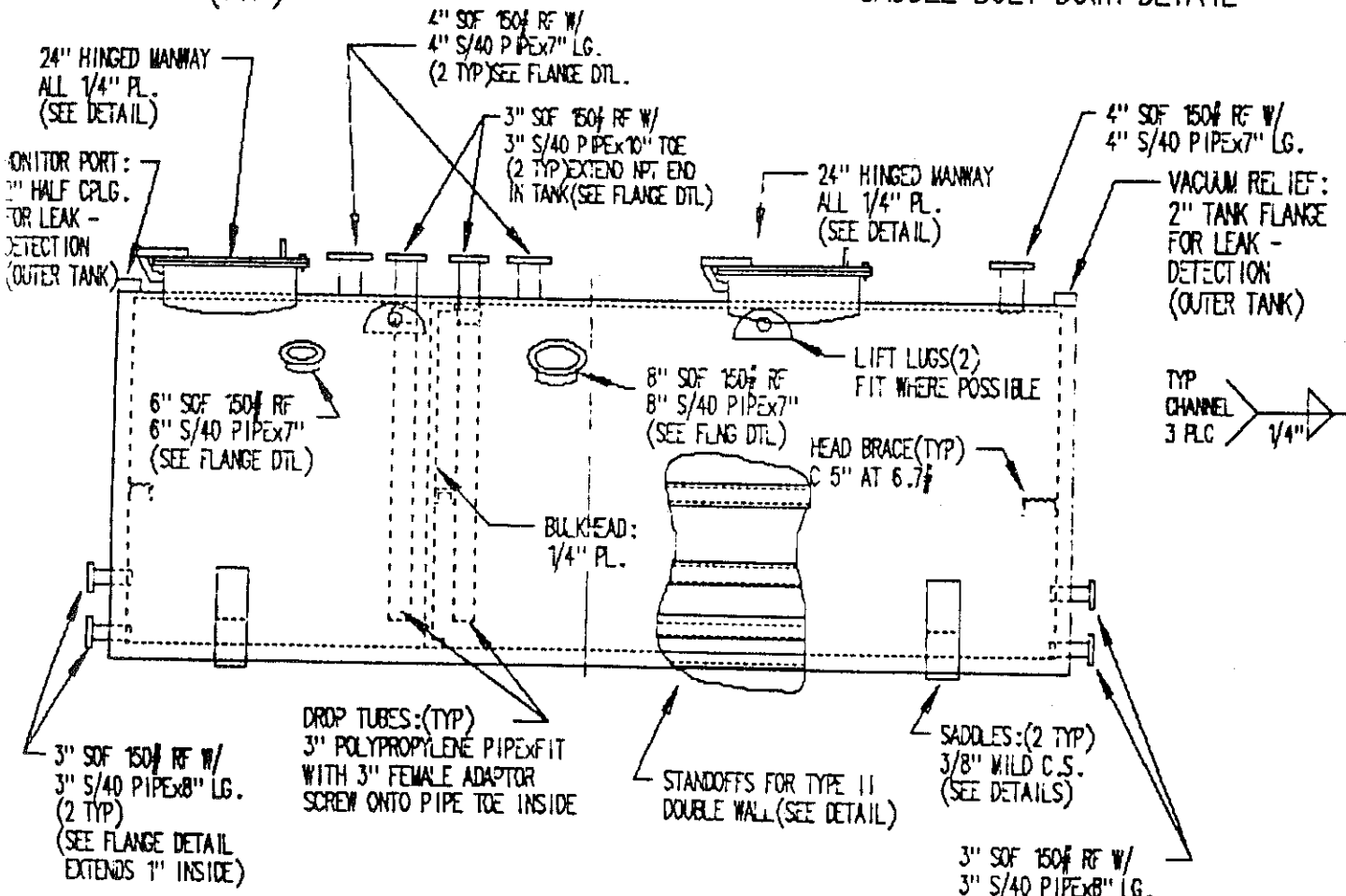

ELEVATION

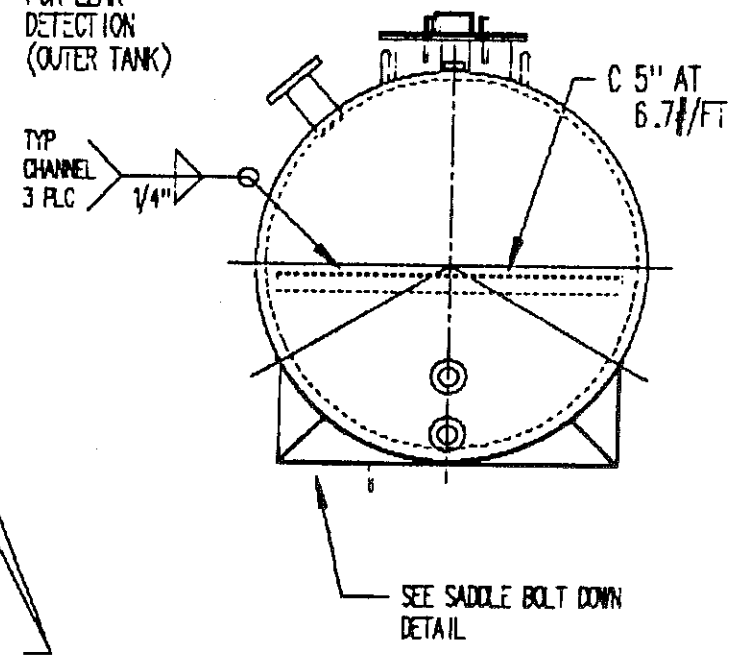

END VIEW

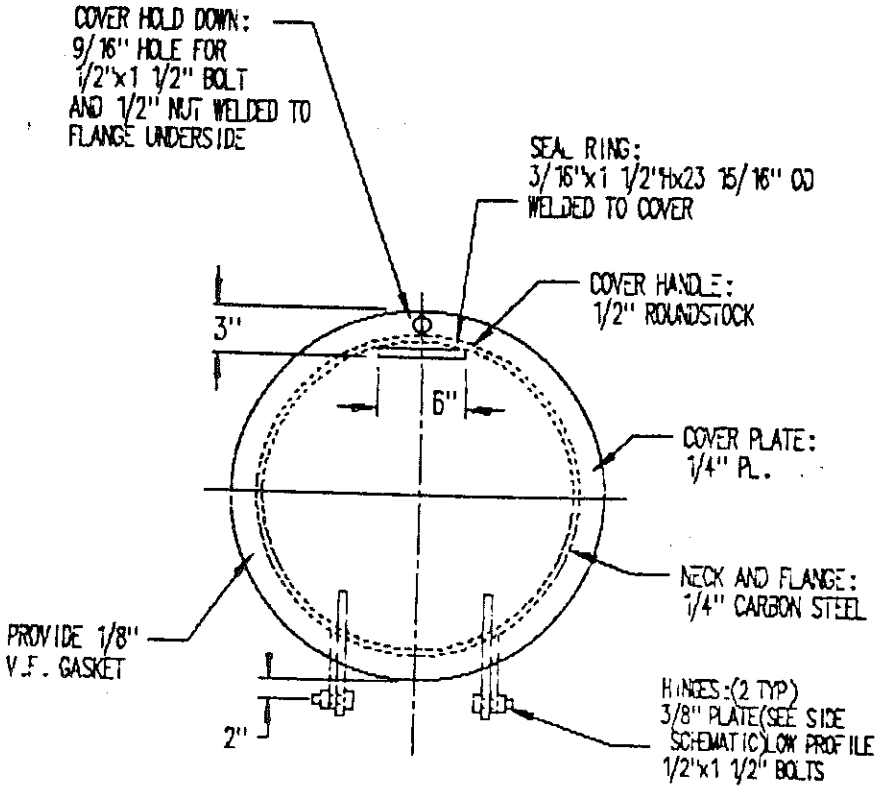


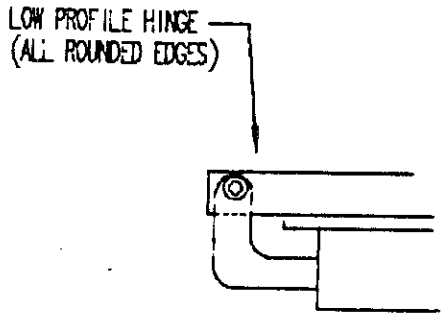


SIDE SCHEMATIC

A&S WELDING CO.
DIV OF IPS, INC.
DRAWN BY: JJB DATE: 10-2-90
DWG# LF-96-194-HDW3 REV: 5
COMPANY: LIQUI-FLO
JOB# 13720
DESCRIPTION: 1- 6M GALLON DOUBLE
WALL HORIZ. TANK ON SADDLES
SCALE: NONE AWT: 12400#

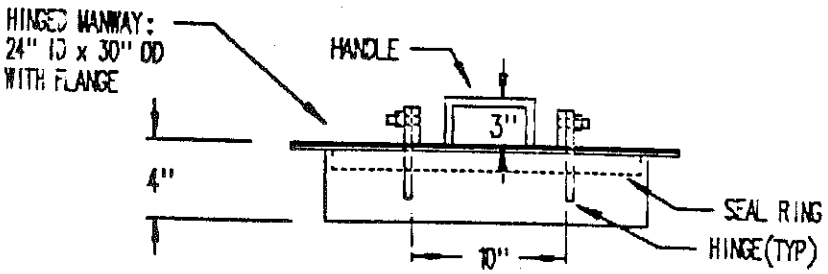


MANWAY COVER DETAIL

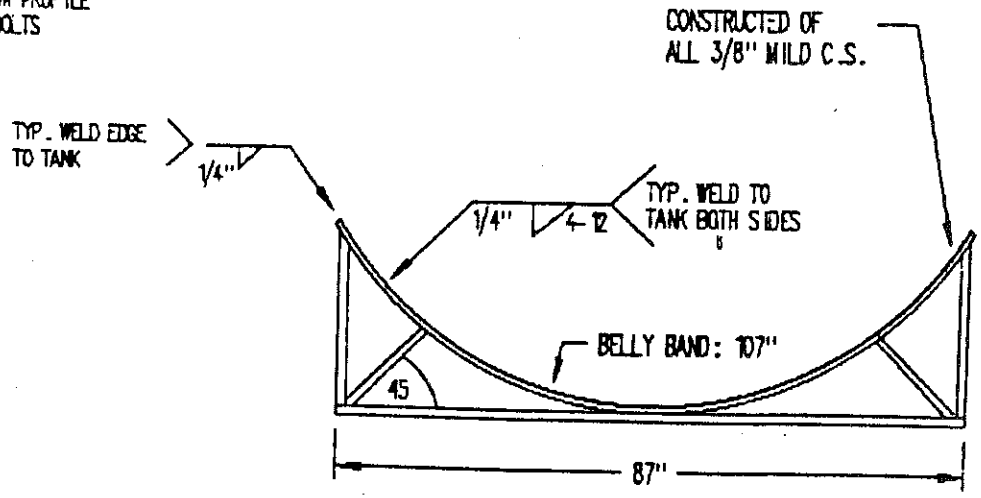


SADDLE DETAIL

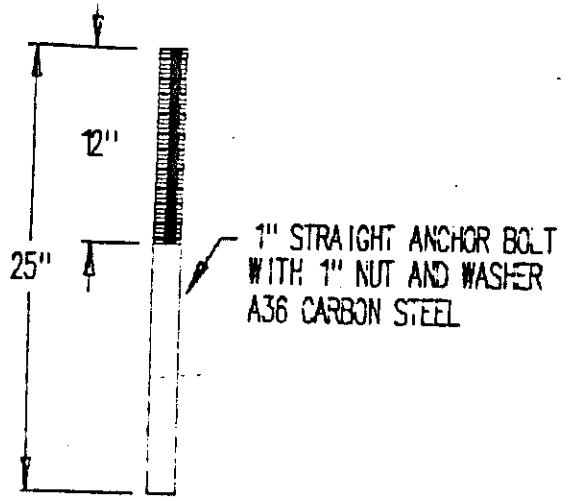


ANCHOR BOLT DETAIL

A&S WELDING CO.
DIV OF IPS, INC.

DRAWN BY: JJB DATE: 10-2-90
DWG# LF-96-194-HDW4 REV: 5
COMPANY: LIQUI-FLOW
JOB# 13720
DESCRIPTION: STRAP/A. BOLT DETAIL
FOR 6M HORIZ. D.W. STORAGE TANK
SCALE: NONE AWT: #

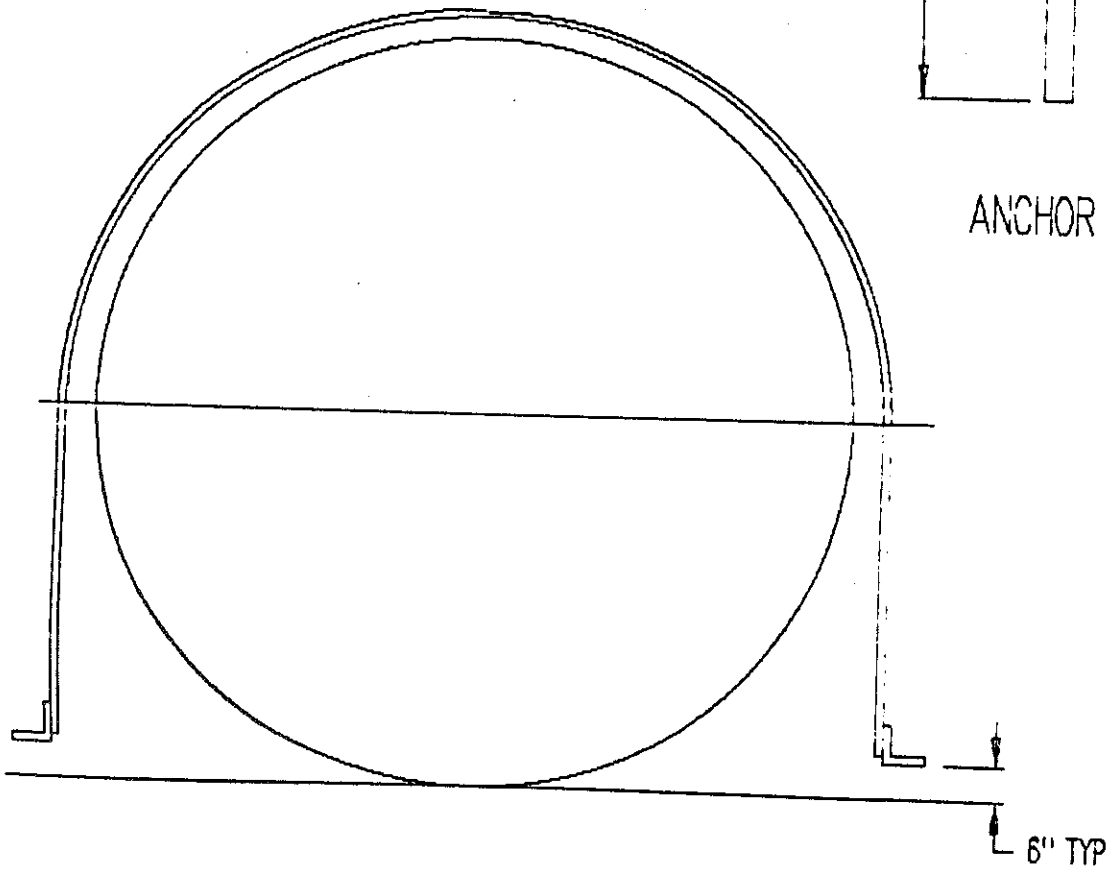


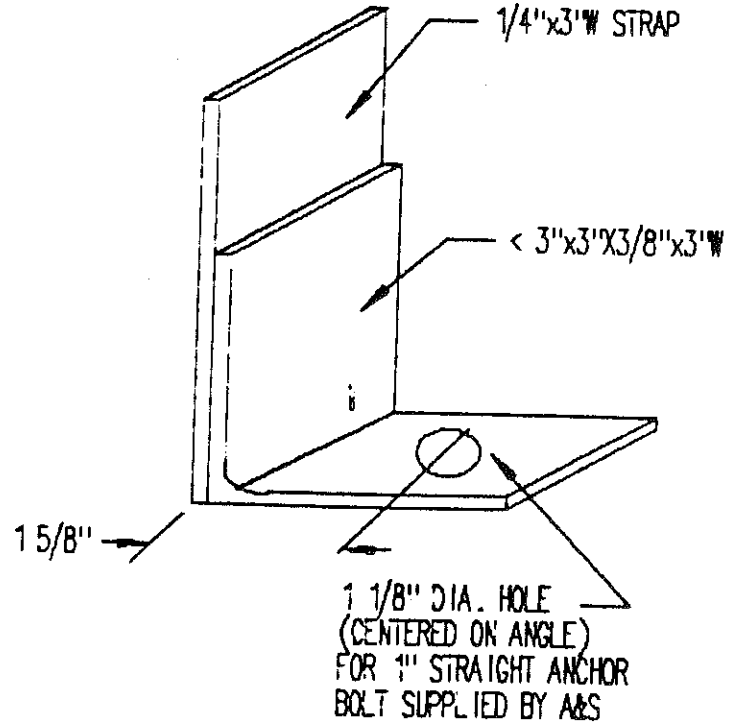


STRAP DETAILS

A&S WELDING CO.
DIV OF IPS, INC.

DRAWN BY: JJB DATE: 10-2-90
DWG# LF-96-194-HDW5 REV: 5
COMPANY: LIQUI-FLO
JOB# 13720
DESCRIPTION: BRACKET DETAIL FOR DIP PIPES D.W. D.C. HORIZ. TANK
SCALE: NONE AWT: #

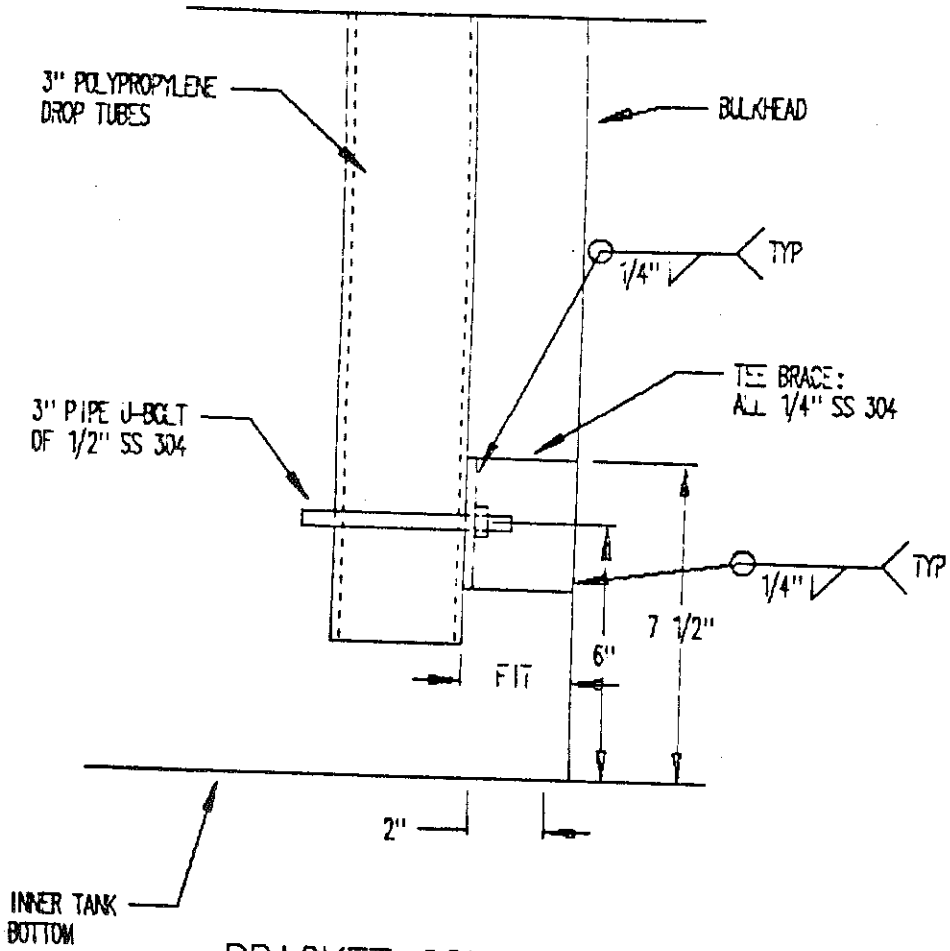


BRACKET CONNECTION FOR DIP PIPE

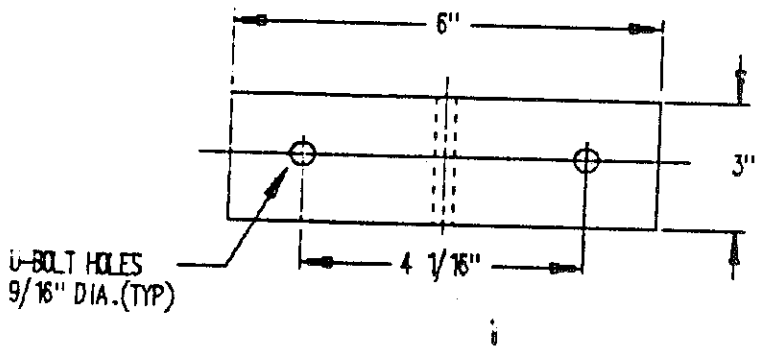


BRACKET DETAIL

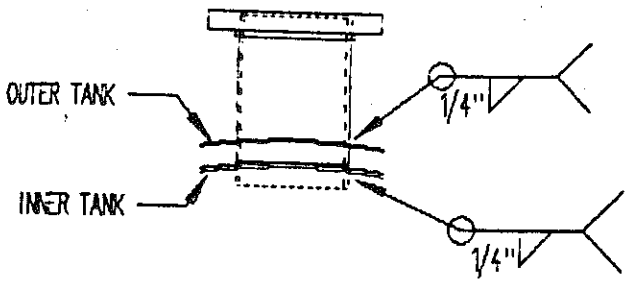


TYPICAL NOZZLE(AND MANWAY)
TO TANK CONNECTION DETAIL

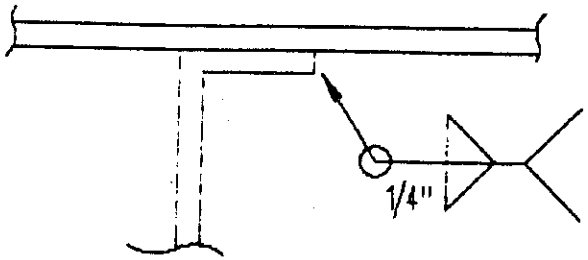


BULKHEAD TO INNER HEAD
CONNECTION DETAIL

A&S WELDING CO.
DIV OF IPS, INC.

DRAWN BY: JJB DATE: 10-2-90
DWG# LF-96-194-HDW6 REV: 5
COMPANY: LIQUI-FLO
JOB# 13720
DESCRIPTION: 1- 6M GALLON
DOUBLE WALL HORIZ. TANK ON SADDLES
SCALE: NONE AWT: 12400#

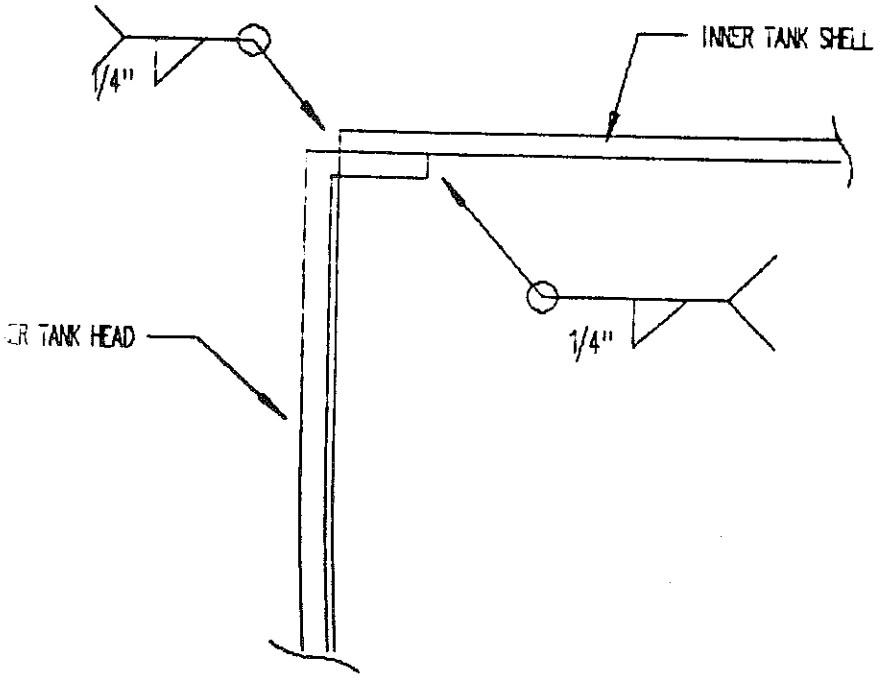


INNER HEAD TO SHELL
CONNECTION DETAIL

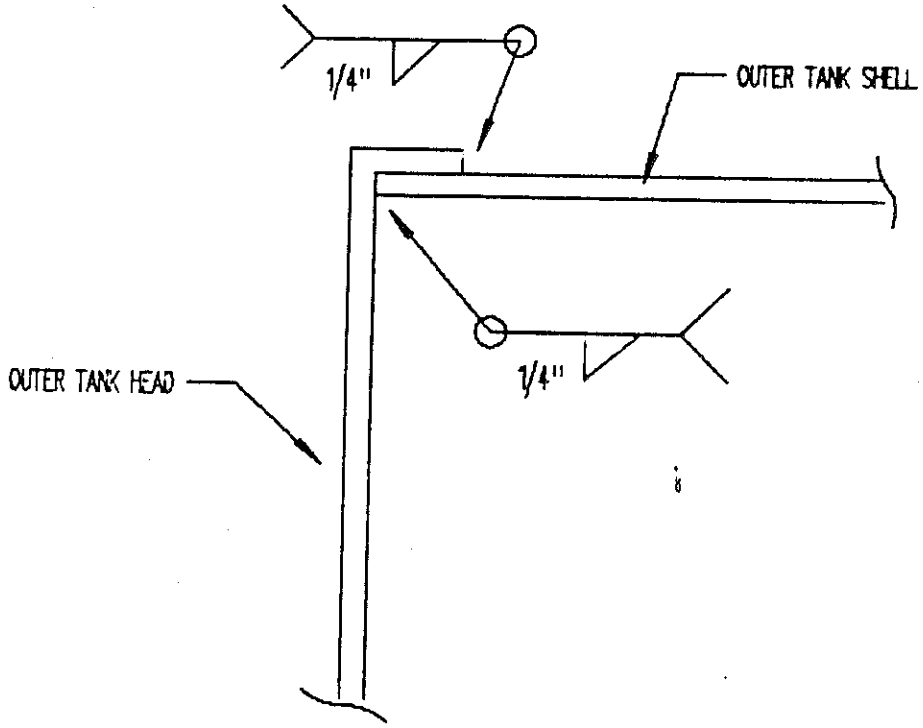


OUTER HEAD TO SHELL
CONNECTION DETAIL

NOTE: 20 DEG IS EQUAL TO A TAPING OF 17 1/2"

A&S WELDING CO.
DIV OF IPS, INC.

DRAWN BY: JJB DATE: 10-2-90
DWG# LF-96-194-HDW7 REV: 5
COMPANY: LIQUI-FLO
JOB# 13720
DESCRIPTION: 1- 6M GALLON
DOUBLE WALL HORIZ. TANK ON SADDLES
SCALE: NONE AWT: 12400#

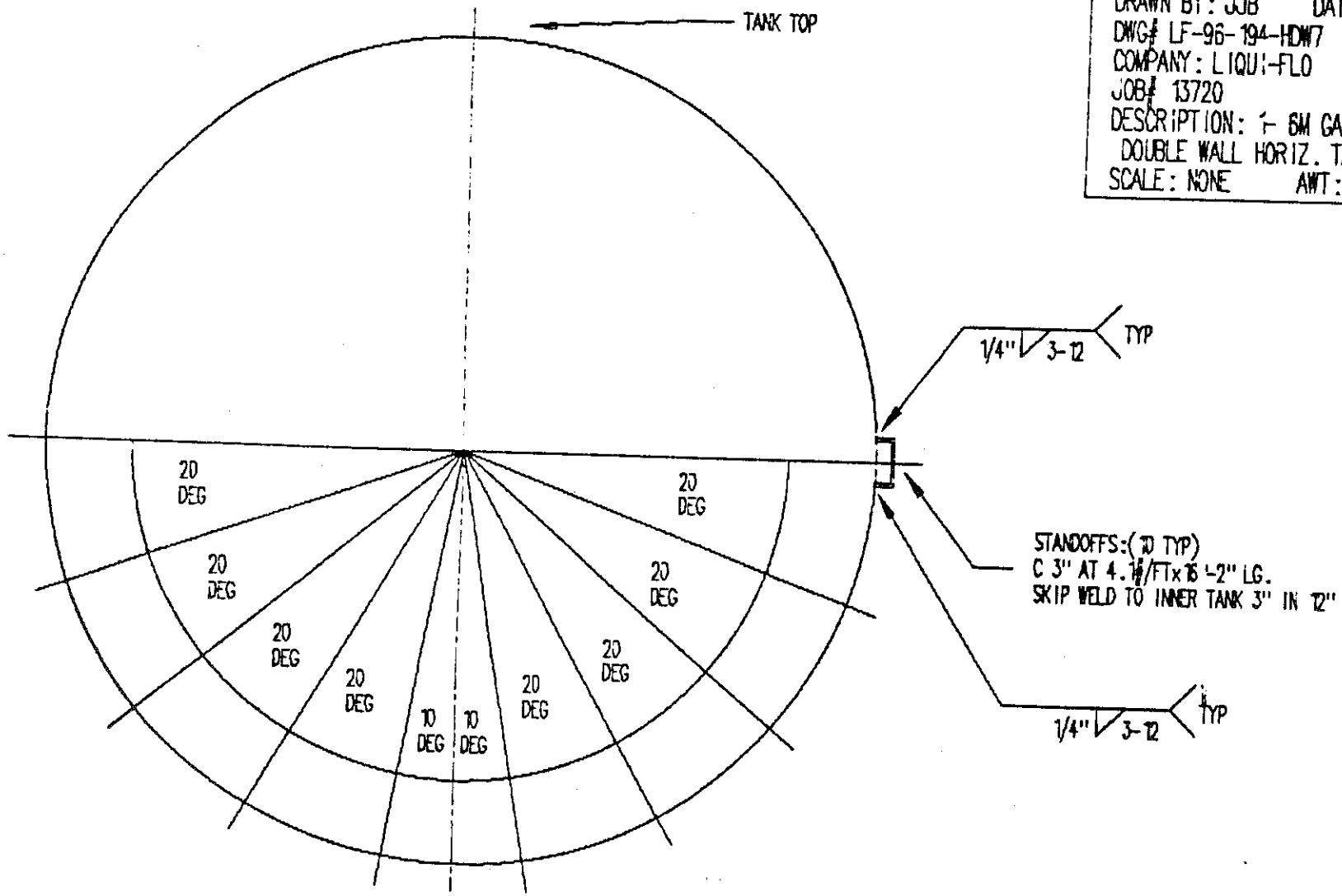


STANDOFF LAYOUT DETAIL

QUALITY CONTROL INSPECTION FORM
(A & S WELDING)

| CUSTOMER & JOB # | DESCRIPTION | |
|---|---|---|
| Liqui-Flow | 6M D.W. D.C | UL # X |
| 13720 | Type II | P3 # |
| | | DOT # |
| | | RECERT# |
| | | REV# |

1. WELD QUALITY SEAMS

A. WELDED BY: M. Nutting D. Threlkeld

B. WELD APPEARANCE:

APPROVED X REJECTED____ INSPECTED BY [signature]

DESCRIPTION OF REPAIRS MADE:

APPROVED____ REJECTED____ INSPECTED BY____ DATE____

2. LAY-OUT

A. BY: Jordan Kopac Jr

B. INSPECTOR:

C. DATE:

NOTE:

3. FITTINGS LEVELED

A. BY: Jordan Kopac Jr.

B. INSPECTOR:

C. DATE:

NOTE:

4. MISC. PARTS

A. DESCRIPTION: Manway

B. INSPECTOR: [signature]

A. DESCRIPTION: Type II

B. INSPECTOR: [signature]

MISC. PARTS

A. DESCRIPTION: _____

_____

B. INSPECTOR: _____

_____

A. DESCRIPTION: _____

_____

B. INSPECTOR: _____

_____

5. MISC. PARTS FITTED

A. EMPLOYEE: Jordan Kupac

B. INSPECTOR: _____

C. DATE: _____

6. MISC PARTS WELDED

A. EMPLOYEE: _____

B. INSPECTOR: _____

C. DATE: _____

7. GRINDING

A. ALL WELD SPLATTER & SLAG

A. REMOVED: _____

B. INSPECTOR: _____

C. DATE: _____

B. ALL GOUGES

A. FILLED: _____

B. GROUND: _____

C. INSPECTOR: _____

D. DATE: _____

8. SANDBLASTING

A. INTERNAL: _____

B. INSPECTOR: _____

C. DATE: _____

A. EXTERNAL: _____

B. INSPECTOR: _____

C. DATE: _____

A. _____: _____

B. INSPECTOR: _____

C. DATE: _____

A. _____: _____

B. INSPECTOR: _____

C. DATE: _____

NONE

9. COATING

| | | |
|---|---|---|
| TYPE: | TYPE: | TYPE: |
| WHERE: | WHERE: | WHERE: |
| INSPECTOR: | INSPECTOR: | INSPECTOR: |
| MILS: | MILS: | MILS: |
| DATE: | DATE: | DATE: |

COATING

| | | |
|---|---|---|
| TYPE: | TYPE: | TYPE: |
| WHERE: | WHERE: | WHERE: |
| INSPECTOR: | INSPECTOR: | INSPECTOR: |
| MILS: | MILS: | MILS: |
| DATE: | DATE: | DATE: |

10. SHIPPING INSPECTION

A. TANK INSPECTED FOR DAMAGE:

ANY DAMAGE TO TANK: YES____ NO X

REPAIRS MADE: —

INSPECTOR: — R. Eddins

DATE: —

B. TANK LOADED PROPERLY

INSPECTOR: R. Eddins

DATE: _____

C. TOUCH-UP ON COATING:

COMPLETE: YES____ NO None

INSPECTOR: _____ DATE: _____

D. ALL MISC. PARTS:

LOADED: YES_____ NO_____ LOADED BY:_____

FREE FROM DEFECTS:_____

INSPECTOR:_____

DATE:_____

---

11. ANY CHANGES, VARIATIONS, OR ADDITIONAL ENGINEERING NOT SHOWN ON DRAWING. DESCRIBE OR SKETCH AND INCLUDE "AUTHORIZATION BY" AND DATE. USE EXTRA PAPER IF NECESSARY & STAPLE TO PACKET.

Internal
3" pipe
Not shipped

# APPENDIX H

# TRACETEK SYSTEM DRAWINGS

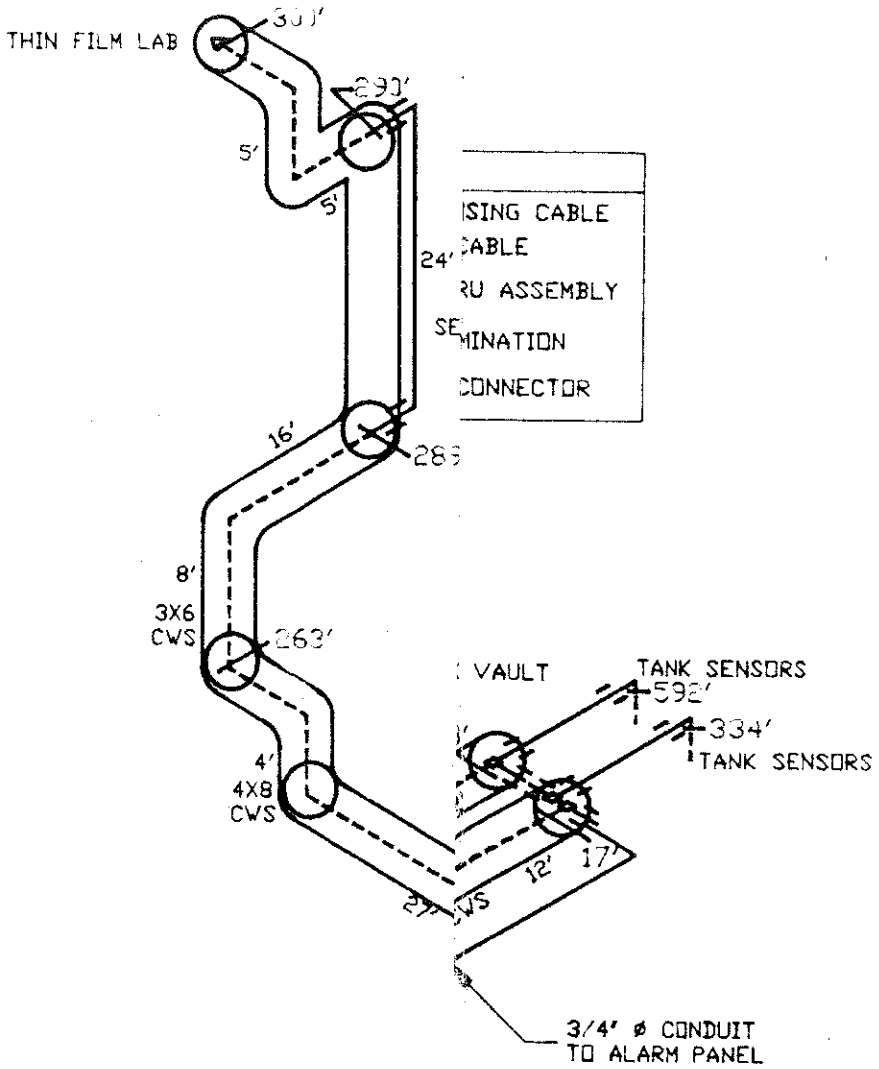
THIN FILM LAB
5'
5'
24'
16'
8'
3X6
CWS
4'
4X8
CWS
VAULT
TANK SENSORS
592'
334'
TANK SENSORS
12'
17'
3/4' ø CONDUIT
TO ALARM PANEL

ESS

IC.

The TraceTek System drawings are currently not available for this certification report. However, AT&T will make every effort to supply this information as soon as it becomes available. It is the opinion of the certifying licensed Illinois Professional Engineer that the TraceTek System drawings are not critical to the operation of the renovated CWSTS based on the system tests presented in Section 4.2.

# APPENDIX I

# TRACETEK WARRANTY

**Raychem**

Raychem Corporation
2015 Spring Road
Suite 700
Oak Brook, Illinois 60521

Telephone 708/572 6300
TWX 910 233 2419

December 20, 1990

Mr. Bill Edwards
Maund-Richards & Associates
9851 South 76th Avenue
Bridgeview, Illinois 60455

Dear Bill:

Regarding our telephone conversation earlier in the week, Raychem agrees to extend our TraceTek product warranty at the AT&T Bell Labs installation in Naperville, IL. We agree to the changes listed below in lieu of our standard terms and conditions of sale (see attachment).

Paragraph 10(a) shall be changed to read "for a period of twelve (12) months from the date of installation."

This change in terms is made with the understanding that a completed TraceTek Commissioning Record will be provided by Maund-Richards to Raychem.

Sincerely,

Lee Grulke

Lee R. Grulke
Central Regional Sales Manager
TraceTek Products Group
RAYCHEM CORPORATION

LG/ls L24

Attachments

8. CONTINGENCIES: Seller shall not be liable for delay in performance or nonperformance of any of its obligations hereunder, in whole or in part, if such performance is rendered impracticable by the occurrence of any contingency or condition beyond the control of either Seller or Seller's suppliers, including without limitation war, sabotage, embargo, riot or other civil commotion, failure or delay in transportation, act of any government or any court or administrative agency thereof (whether or not such action proves to be invalid), labor dispute (whether or not involving Seller's employees), accident, fire, explosion, flood or other casualty, shortage of labor, fuel, energy, raw materials or machinery or technical failure. If any such contingency or condition occurs, Seller may allocate production and deliveries in any reasonable manner and may include in such allocation any regular customers, whether or not then under contract, and Seller's own requirements. If, as a result of any such contingency, Seller's performance is delayed by more than six (6) months, the prices set forth herein shall be subject to appropriate adjustment by Seller.

9. SUBSTITUTIONS AND MODIFICATIONS: Seller may substitute or modify goods or services provided the substituted or modified goods or services comply with applicable specifications. Seller may overship or undership up to ten percent (10%) on any order. Invoices shall be based on the quantity actually shipped.

10. WARRANTY; SUITABILITY:

(a) Seller warrants goods delivered hereunder against faulty workmanship and use of defective materials for a period of six (6) months from the date of shipment. Faulty workmanship and/or use of defective materials shall be hereinafter referred to as a "deficiency." The foregoing warranty shall not be enlarged, or affected by, and (except as expressly provided below in this Section 10) no obligation or liability shall arise or grow out of, Seller's rendering of systems design, drawings, technical advice, services or instructions in connection with the goods furnished hereunder. Such warranty is the only warranty made by Seller and it can be amended only by a written instrument signed by a duly authorized officer of Seller. If the goods furnished by Seller hereunder are determined to contain a deficiency, Buyer's exclusive remedy shall be to have Seller repair such goods or supply replacement goods or credit Buyer's account for such goods and accept their return, whichever Seller may elect in its sole discretion. Notwithstanding the foregoing sentence, in no circumstances shall Seller have any liability or obligation with respect to expenses, liabilities or losses associated with the installation or removal of any goods or the installation of replacement goods or for any inspection, testing or redesign occasioned by any deficiency or by the repair or replacement of goods. Seller's obligations are subject to the further condition that Seller shall have no liability whatsoever for any deficiency unless (i) Seller is notified in writing promptly (and in no event later than 30 days) after