RUST

Quality • Integrity • Creativity • Responsiveness

RCRA Facility Investigation (RFI) Phase I RFI Workplan Quality Assurance Project Plan

Chemical Waste Management
Vickery, Ohio

U.S. EPA ID No.
OHD 020 273 819

Prepared for:

CWM - Vickery, Inc.

August 1995

RUST

Rust Environment & Infrastructure

TABLE OF CONTENTS

Section **Page Number**

1.0 PROJECT DESCRIPTION . . . . . 1 of 16
- 1.1 Introduction . . . . . 2 of 16
  - 1.1.1 Objectives of Phase I . . . . . 2 of 16
  - 1.1.2 Project Status/Phase I . . . . . 4 of 16
  - 1.1.3 QAPjP Preparation Guidelines and History . . . . . 5 of 16
- 1.2 Site/Facility Description . . . . . 6 of 16
  - 1.2.1 Location, Facility Size, and Surroundings . . . . . 6 of 16
  - 1.2.2 Natural & Manmade Features and Topography . . . . . 6 of 16
  - 1.2.3 Local Geology & Hydrogeology . . . . . 6 of 16
- 1.3 Site/Facility History . . . . . 6 of 16
  - 1.3.1 General History . . . . . 6 of 16
  - 1.3.2 Past Data Collection Activities . . . . . 8 of 16
  - 1.3.3 Current Status . . . . . 10 of 16
- 1.4 Project Objectives . . . . . 12 of 16
  - 1.4.1 Specific Objectives by Activity/Media . . . . . 12 of 16
  - 1.4.2 Project Target Parameters and Intended Data Usages . . . . . 14 of 16
  - 1.4.3 Data Quality Objectives . . . . . 14 of 16
- 1.5 Sample Network Design and Rationale . . . . . 15 of 16
- 1.6 Project Schedule . . . . . 16 of 16

2.0 PROJECT ORGANIZATION AND RESPONSIBILITY . . . . . 1 of 7
- 2.1 Project Organization Chart . . . . . 1 of 7
- 2.2 Management Responsibilities . . . . . 1 of 7
- 2.3 Quality Assurance Responsibilities . . . . . 2 of 7
- 2.4 Laboratory Responsibilities . . . . . 3 of 7
- 2.5 Field Responsibilities . . . . . 6 of 7

3.0 QUALITY ASSURANCE OBJECTIVES FOR MEASUREMENT DATA . . . . 1 of 4
- 3.1 Precision . . . . . 1 of 4
- 3.2 Accuracy . . . . . 2 of 4
- 3.3 Completeness . . . . . 2 of 4
- 3.4 Representativeness . . . . . 2 of 4
- 3.5 Comparability . . . . . 3 of 4
- 3.6 Level of Quality Control Effort . . . . . 3 of 4

4.0 SAMPLING PROCEDURES . . . . . 1 of 1

TABLE OF CONTENTS
(Cont'd)

Section **Page Number**

5.0 CUSTODY PROCEDURES . . . . . 1 of 4
5.1 Field Custody Procedures . . . . . 1 of 4
5.2 Laboratory Custody Procedures . . . . . 4 of 4
5.3 Final Evidence Files . . . . . 4 of 4

6.0 CALIBRATION PROCEDURES AND FREQUENCY . . . . . 1 of 3
6.1 Field Instrument Calibration . . . . . 1 of 3
6.2 Laboratory Instrument Calibration . . . . . 2 of 3

7.0 ANALYTICAL PROCEDURES . . . . . 1 of 2
7.1 Field Measurements . . . . . 1 of 2
7.2 Laboratory Analytical Procedures . . . . . 1 of 2
7.3 Geotechnical Analytical Procedures . . . . . 2 of 2

8.0 INTERNAL QUALITY CONTROL CHECKS . . . . . 1 of 2
8.1 Field QC Checks . . . . . 1 of 2
8.2 Laboratory Quality Control Checks . . . . . 1 of 2

9.0 DATA REDUCTION, VALIDATION, AND REPORTING . . . . . 1 of 5
9.1 Data Reduction . . . . . 1 of 5
9.1.1 Field Data Reduction Procedures . . . . . 1 of 5
9.1.2 Laboratory Data Reduction Procedures . . . . . 1 of 5
9.2 Data Validation . . . . . 2 of 5
9.2.1 Procedures to Evaluate Field Data . . . . . 2 of 5
9.2.2 Procedures to Validate Laboratory Data . . . . . 2 of 5
9.3 Data Reporting . . . . . 3 of 5
9.3.1 Field Data Reporting . . . . . 3 of 5
9.3.2 Laboratory Data Reporting . . . . . 3 of 5

10.0 PERFORMANCE AND SYSTEM AUDITS . . . . . 1 of 2
10.1 Field Performance and System Audits . . . . . 1 of 2
10.1.1 Internal Field Audits . . . . . 1 of 2
10.1.2 External Field Audits . . . . . 1 of 2
10.2 Laboratory Performance and Systems Audits . . . . . 2 of 2
10.2.1 Internal Laboratory Audits . . . . . 2 of 2

11.0 PREVENTATIVE MAINTENANCE . . . . . 1 of 1
11.1 Field Instrument Preventative Maintenance . . . . . 1 of 1

TABLE OF CONTENTS
(Cont'd)

Section **Page Number**

11.2 Laboratory Instrument Preventative Maintenance . . . . . 1 of 1

12.0 SPECIFIC ROUTINE PROCEDURES USED TO ASSESS DATA PRECISION, ACCURACY AND COMPLETENESS . . . . . 1 of 2
12.1 Precision Assessment . . . . . 1 of 2
12.2 Accuracy Assessment . . . . . 1 of 2
12.3 Completeness Assessment . . . . . 2 of 2

13.0 CORRECTIVE ACTION . . . . . 1 of 3
13.1 Field Corrective Action . . . . . 1 of 3
13.2 Laboratory Corrective Action . . . . . 2 of 3
13.3 Corrective Action During Data Validation and Data Assessment . . . . . 3 of 3

14.0 QUALITY ASSURANCE REPORTS TO MANAGEMENT . . . . . 1 of 2
14.1 Contents of Project QA Reports . . . . . 1 of 2
14.2 Frequency of QA Reports . . . . . 2 of 2
14.3 Individuals Receiving/Reviewing QA Reports . . . . . 2 of 2

APPENDICES

Appendix A GP Environmental Services Analytical and Preparatory SOPs
Appendix B GP Environmental Services Sample Custody SOP

TABLES AND FIGURES

Table 1-1 Summary of Sampling and Analysis Program
Table 1-2 Reporting Limits and Data Quality Levels Appendix IX Volatile Organics by Method 8240B
Table 1-3 Reporting Limits and Data Quality Levels Appendix IX Volatile Organics by Method 8240B
Table 1-4 Reporting Limits and Data Quality Levels Appendix IX Organochlorine Pesticides/PCB's by Method 8080A
Table 1-5 Reporting Limits and Data Quality Levels Appendix IX Organophosphate Pesticides/PCB's by Method 8141A
Table 1-6 Reporting Limits and Data Quality Levels Appendix IX Organochlorine Herbicides by Method 8150B

TABLE OF CONTENTS
(Cont'd)

Table 1-7	Reporting Limits and Data Quality Levels Appendix IX Metals and Inorganics
Table 1-8	Reporting Limits and Data Quality Levels Appendix IX Dioxins by Method 8280
Figure 1-1	Project Schedule
Figure 2-1	RFI Project Organization Chart
Table 3-1	Precision and Accuracy Criteria Appendix IX Volatile Organics by Method 8240B
Table 3-2	Precision and Accuracy Criteria Appendix IX Semivolatile Organics by Method 8270B
Table 3-3	Precision and Accuracy Criteria Appendix IX Organochlorine Pesticides/PCBs by Method 8080A
Table 3-4	Precision and Accuracy Criteria Appendix IX Organophosphate Pesticides by Method 8141A
Table 3-5	Precision and Accuracy Criteria Appendix IX Organochlorine Herbicides by Method 8150B
Table 3-6	Precision and Accuracy Criteria Appendix IX Metals and Inorganics
Table 3-7	Precision and Accuracy Criteria Appendix IX Dioxins by Method 8280
Table 7-1	Analytical & Preparatory Methods
Table 7-2	Geotechnical Methods
Table 8-1	GP Environmental Services Control Limits and Corrective Actions
Table 11-1	GP Environmental Services Preventive Maintenance Schedule

LIST OF PERSONS WHO HAVE RECEIVED THIS QAPP

Thomas W. Matheson	U.S. EPA Region 5	4 Copies
Edwin Lim	Ohio EPA DHWM	1 Copy
Chuck Hull	Ohio EPA NWDO	1 Copy
CWM Vickery Information Repository		1 Copy
Michael Curry	CWM Vickery	2 Copies
Ruth Carter	GP Environmental Services	1 Copy
Richard Zweig	Rust Environment & Infrastructure, Inc.	2 Copies

SECTION 1
PROJECT DESCRIPTION

This section describes the purpose and scope of the Phase I RCRA Facility Investigation (RFI) at the CWM Vickery facility, and indicates how the findings of this investigation will be used to determine the appropriate course of further action, if any, required to address the overall objectives of the RCRA Corrective Action process. The Phase I RFI is being completed under the direction of the United States Environmental Protection Agency (U.S. EPA) as a condition to the issuance of a Part B Permit to CWM Vickery dated October 24, 1994. As stated in the Part B Permit, CWM Vickery must investigate potential releases of hazardous waste(s) or hazardous constituent(s) from all solid waste management units (SWMUs) at the facility, regardless of when the waste was placed in such units. If these investigations show the presence of hazardous waste constituents in the environment at concentrations that pose a risk to human health and the environment, Corrective Measures may be necessary.

The Phase I RFI at CWM Vickery is specifically focussed on determining if releases have actually occurred -- this is, are there hazardous waste constituents in the soils adjacent to and underlying the SWMUs and Areas of Concern (AOCs) or in the sediments of surface streams draining the site. If so, the Phase I report will propose specific and focussed investigations to assess the extent and risk-impact of those releases, including investigation of groundwater if appropriate. If not, there will be no need to investigate the possible presence of hazardous waste constituents in groundwater or to assess potential impacts to offsite surface water receptors. As discussed below, this approach is justified because historic groundwater monitoring data shows no detectable contamination, and because follow-up studies of releases to surface water have shown full recovery of the ecosystem.

This Quality Assurance Project Plan (QAPjP) presents the organization, objectives, planned activities, and specific QA/QC procedures associated with the Phase I RFI for this facility. Specific protocols for sampling, sample handling and storage, chain-of-custody, and laboratory and field analyses described herein. All QA/QC procedures will be structured in accordance with applicable technical standards, U.S. EPA's requirements, regulations, guidance, and technical standards. This QAPjP has been prepared in accordance with a guidance manual entitled, "Region 5 Model RCRA Quality Assurance Project Plan", May 1993.

1.1 Introduction

This Phase I QAPjP was prepared by Rust Environment & Infrastructure Inc. (Rust) for the Chemical Waste Management (CWM) Vickery Treatment, Storage and Disposal (TSD) Facility at the request of CWM Vickery. The QAPjP is appended to the Phase I RFI Work Plan, dated August 1995. A Field Sampling Plan is included as Section 5 of the Phase I Work Plan is hereby explicitly incorporated into this QAPjP by reference. A Project Management Plan (PjMP) and a Health and Safety Plan (HASP) are also appended to the Work Plan.

1.1.1 Objectives of Phase I

The purpose of the Phase I RFI is to determine if releases have actually occurred from 53 SWMUs and 9 AOCs identified in (and/or subsequent to) the RCRA Facility Assessment. Specifically, are there hazardous waste constituents in the soils adjacent to and underlying the SWMUs and AOCs or in the sediments of surface streams draining the site. If so, the Phase I report will propose specific and focussed investigations to assess the extent and risk-impact of those releases, including investigation of groundwater if appropriate. If not, there will be no need to investigate the possible presence of hazardous waste constituents in groundwater or to assess potential impacts to offsite surface water receptors.

This approach is being taken because most of the SWMUs and AOCs at the facility were land-based units used for the storage of liquid hazardous waste prior to deep-well injection or for the treatment of residuals by land-farming. Some of these units have been "clean-closed" and some have been only partially closed. They are underlain by clayey lacustrine and glacial till soils which, based on several years of semi-annual and quarterly groundwater monitoring, have substantially limited the migration of hazardous waste or hazardous waste constituents into the subsurface.

Objectives of the data collection will be as follows:

- Characterize the nature of residual materials at those SWMUs and AOCs not clean closed by drilling borings and collecting samples of these materials. Data quality must be sufficient for use in a qualitative risk assessment during the Phase I RFI. The results of this risk assessment would be used to develop action levels (i.e., concentrations that would trigger a Corrective Measures Study (CMS) for the site. The data quality should also be sufficient for

use in a quantitative risk assessment should that prove necessary at some future point in the RCRA Corrective Action process.

- Determine through borings and soil sampling if there are hazardous waste constituents in the soils adjacent to and underlying the SWMUs and AOCs -- i.e., have hazardous waste constituents been released beyond the boundaries of the SWMUs and into the environment. Depending on the configuration of the individual SWMU or AOC, this could involve the collection of soil samples from beneath residual waste materials, or the collection of surficial soil samples. During this determination, it may be readily apparent from field observations that hazardous waste constituents are present in the soil, and if so, the borings would be extended to assess the vertical extent of migration. Data quality must be sufficient for use in a qualitative risk assessment during the Phase I RFI. The results of this risk assessment would be used to develop action levels (i.e., concentrations that would trigger a Corrective Measures Study (CMS) for the site. The data quality should also be sufficient for use in a quantitative risk assessment should that prove necessary at some future point in the RCRA Corrective Action process.

- Characterize the effectiveness of the clean closure of former SWMUs now underneath the TSCA Closure Cell by collecting a sample of groundwater from the capillary drainage layer. This layer has continual inward flow, and the groundwater flowing into it has traveled through the clean-closed soils of the former SWMUs. Data quality must be sufficient for use in a qualitative risk assessment during the Phase I RFI. The results of this risk assessment would be used to develop action levels (i.e., concentrations that would trigger a Corrective Measures Study (CMS) for the site. The data quality should also be sufficient for use in a quantitative risk assessment should that prove necessary at some future point in the RCRA Corrective Action process.

- Characterize residual effects of releases to surface water drainage-ways at the site by collecting samples of sediment at exit points from the site. Data quality must be sufficient for use in a qualitative risk assessment during the Phase I RFI. The results of this risk assessment would be used to develop action levels (i.e., concentrations that would trigger a Corrective Measures Study (CMS) for the site. The data quality should also be sufficient for use in a quantitative risk assessment should that prove necessary at some future point in the RCRA Corrective Action process.

1.1.2 Project Status/Phase I

Rust will utilize an integrated and phased approach for the RFI. The Phase I investigation will integrate existing data with information that will be gathered through direct field investigations.

The Phase I field investigation will include:

- Residual waste material sampling to characterize SWMUs and AOCs not clean closed;
- Subsurface soil sampling at SWMUs and AOCs where residual materials are still present to determine if hazardous waste constituents have been released into the underlying native soils.
- Surface soil (0 to 24 inches) sampling at SWMUs and AOCs where liquids or sludges were or could have been released to the ground surface;
- Deeper subsurface soil sampling to assess the vertical extent of migration where the uppermost native soil shows field evidence of contamination;
- Sampling of groundwater collected in the capillary drainage layer of the TSCA Closure Cell to characterize the effectiveness of clean closures at former SWMUs now located beneath the Cell;
- Sediment sampling at the exit points for streams draining the site to assess residual impacts of releases to surface water;

Soil and sediment samples will be analyzed for Appendix IX volatile organics, semivolatile organics, pesticides (organochlorine and organophosphate), PCBs, herbicides, metals, cyanide, sulphide, and soil pH. Approximately 10 percent of these samples will also be analyzed for cation exchange capacity (CEC), Atterburg limits, percent moisture, grain size distribution, and total organic carbon (TOC) to determine soil physical parameters and their effect on contamination migration. The groundwater sample from the capillary drain will be analyzed for Appendix IX volatile organics, semivolatile organics, pesticides (organochlorine and organophosphate), PCBs, herbicides, metals, cyanide, sulphide and dioxin.

Data from the Phase I investigation will be evaluated in conjunction with existing data to determine whether a Phase II investigation is necessary. If hazardous waste constituents are present in the

soils or sediments at the site, a qualitative risk assessment will be performed to establish action levels for the site, and the Phase I report will propose specific and focussed investigations to assess the extent and risk-impact of those releases, including investigation of groundwater if appropriate. If not, there will be no need to investigate the possible presence of hazardous waste constituents in groundwater or to assess potential impacts to offsite surface water receptors. The rationale and scope of any Phase II investigation will be discussed with and approved by the U.S. EPA prior to implementation.

Potential Phase II work may include:

- Additional soil or sediment sampling to further define the extent and concentration levels of hazardous waste constituents in these media;
- Sampling of existing monitor wells where such wells are appropriately positioned to assess a particular SWMU or AOC with soil contamination; and
- Installation of additional monitoring wells where the existing network can not adequately characterize potential groundwater impacts from a SWMU or AOC with soil contamination.

A technical memorandum, presenting the Phase I data and recommendations of the risk assessment will be prepared and submitted to the U.S. EPA. After a review of the technical memorandum, the need for implementing a Phase II investigation will be evaluated in light of the overall objectives of the Corrective Action process.

This QAPjP is intended to fully address the scope of Phase I RFI activities at the site. To the extent that potential Phase II activities are comparable to those in Phase I, this QAPjP is expected to apply; however, specific review of any proposed Phase II activities and this QAPjP will be required to assess its applicability and the need to provide further information in a "Phase II QAPjP Addendum".

1.1.3 QAPjP Preparation Guidelines and History

As explained above, this Phase I QAPjP has been prepared in accordance with the "Region 5 Model RCRA Quality Assurance Project Plan", dated, May 1993. A pre-QAPjP meeting was held in Chicago on January 17, 1995. CWM Vickery submitted a document describing a proposed grouping of SWMUs and outline the project objective on February 17, 1995, and received comments

from U.S. EPA on April 11, 1995. The timing of this receipt did not allow the comments to be incorporated in the first draft of this QAPjP submitted in April 1995. The current version of the QAPjP (August 1995) has been substantially re-written in response to the April 11, 1995 comments and those received on the first draft. This Phase I QAPjP therefore retains a "Version: 0" status.

1.2 Site/Facility Description

1.2.1 Location, Facility Size, and Surroundings

As described in Section 2.1 of the Phase I RFI Work Plan, the CWM Vickery Facility is located in a rural, unincorporated area of Sandusky County in the north-central part of Ohio.

1.2.2 Natural & Manmade Features and Topography

The natural and manmade features of the CWM Vickery facility are described in Sections 2.1 and 3.1 of the Phase I RFI Work Plan.

1.2.3 Local Geology & Hydrogeology

Information concerning the site's geology, soil, groundwater resources, surface hydrology and drainage is presented in Sections 3.2 and 3.3 of the Phase I RFI Work Plan.

1.3 Site/Facility History

1.3.1 General History

The CWM Vickery facility provides for the treatment, storage and disposal of liquid hazardous wastes. Operations at this facility began in 1958. The site began as Don's Oil Service and in 1970 changed its name to Ohio Liquid Disposal (OLD). Waste Management, Inc. (WMI) acquired the facility in 1978 and later transferred it to Chemical Waste Management (a wholly owned subsidiary of WMI).

The site was initiated as an oil recovery facility to provide hauling services for waste oil from neighboring industries to a central facility and to recover the oil for eventual resale. As time went

on the facility started to accept various industrial wastes and stored them in surface impoundments. In 1964 the site was granted permission by the State of Ohio to accept chemical process waste. More surface impoundments were constructed to hold these wastes. As the inventory of wastes increased the site began searching for a suitable means to dispose of the waste. In 1972, the site was granted permission to drill a test hole to evaluate the subsurface conditions for the possible location of an injection well. After a number of years of applying for an approval to use the injection well, being denied, and appealing, an approval was finally granted to inject waste into the subsurface wells drilled on the site. A total of 7 injections wells were drilled on site throughout the history of the facility (Injection Wells 1, 1A, 2, 3,4, 5 and 6).

During the history of the facility a total of 12 surface impoundments existed. These surface impoundments were constructed between the years 1964 through 1975. As injection of wastes began, the surface impoundments were closed. Between the years of 1979 to 1992 all of the surface impoundments were closed. Details of these closures can be found in Section 6.0 of the Report on Current Conditions (December 1994 Revised April 1994). Injection Wells 1, 1A and 3 were plugged and abandoned due to mechanical and physical failures. Presently, Injection Wells 2, 4, 5 and 6 are active on site.

Additional facilities used at the site to treat, store and dispose of wastes included landfarming activities and an Oil Recovery Facility.

In order to provide for the disposal of the wastes generated during the closure of the surface impoundments and other treatment facilities, CWM Vickery was granted an approval to construct a Toxic Substances Control Act (TSCA) closure cell. The closure cell was built between 1986-1988. Waste from a temporary waste pile was finally given an approval to be moved into the closure cell in 1990. The waste in the closure cell is comprised of stabilized wastes from the closure of the surface impoundments, and specific site facilities detailed in the 1984 Consent Decree. A number of the surface impoundments across the site were certified clean closed (i.e., Ponds 4, 5,7, 11 and 12) by the OEPA.

Presently, CWM Vickery receives a large variety of liquid hazardous wastes. The most common types include; pickle liquors, acid wastes, caustic wastes, neutral wastes, and other aqueous wastes including landfill leachate. The facility does not accept radioactive wastes, infectious wastes, explosive or shock sensitive wastes, air reactive wastes, compressed gases, reactive wastes

that generate dangerous quantities of toxic or explosive gases when acidified, bulk ignitable wastes, bulk wastes containing >5% Volatile Organic Compounds (VOCs), or wastes that the facility deems can not be managed properly.

1.3.2 Past Data Collection Activities

The CWM Vickery Facility has been subject to a number of hydrogeologic and geologic investigations since 1983. The following summaries are based on a review of reports and supporting documents submitted by consultants and information obtained from the project files of the U.S. EPA and the State.

1.3.2.1 Hydrogeologic Assessment (1983)

This assessment was completed by Bowser-Morner, Inc. and is summarized in their report titled "Hydrogeologic Assessment, Northern Ohio Treatment Facility, Vickery, Ohio", dated May 3, 1983. The purpose of this assessment was to perform a hydrogeologic study and analysis of existing groundwater quality data. The work was done in accordance with the special terms and conditions set forth by the Hazardous Waste Facilities Approval Board (HWFAB) in the site permit issued December, 1981. The hydrogeologic investigation was based on a comprehensive soil boring and superficial rock coring program integrated with data available in published and unpublished literature. Water quality data was summarized and evaluated utilizing regression analysis.

The report summarized that the natural soil conditions are good to excellent for the containment of the types of waste handled at the site. A statistical analysis of the groundwater quality data indicated that most of the parameters except for hardness, sulfates and chlorides were below federal drinking water standards at the time of the analysis. Of these parameters, hardness and sulfate concentrations were attributed to the natural groundwater and the mineralogy of the rock formation through which it flows. The reasons for the elevated chloride levels was not determined as part of this study. The study recommended additional testing, analysis and installation of new monitoring wells.

1.3.2.2 Geohydrologic Review (1983)

This review was completed by Golder Associates and described in their report titled "Geotechnical and Geohydrologic Data Review, Vickery, Ohio Chemical Waste Management Facility", dated June

20, 1983. The report was requested by CWM - Vickery, in conjunction with the OEPA, to perform a thorough review and study of all the geotechnical and geohydrologic data available. The report summarized the geologic and hydrogeologic conditions at the site. This included details on the types of deposits, structural features, permeability (vertical and horizontal), water level data and the groundwater flow directions and velocities. An overall understanding of the hydrogeological system at the site was developed with the data available to the date of the report. This was summarized by Golder as an interim step in defining the aquifer parameters and more quantitatively understanding the system. Additional studies and continuing studies were to be directed toward providing these data and information needed to accurately assess the potential for groundwater contamination at the facility. The results of these studies were to be presented when they were available. In conclusion, Golder stated that the Vickery site is considered to have characteristics favorable for locating a hazardous waste facility.

1.3.2.3 Summary of Hydrogeologic Conditions (1983)

This summary was completed by Golder Associates and described in their report titled " Summary and Characterization of Site Hydrogeologic Conditions" dated September 29, 1983. The purpose of this report was to present a more detailed discussion and interpretation of site hydrogeology, based on the results of published data and previous studies at the site by others, and the most recent results of field investigations at the site. A summary of hydrogeologic conditions was made by Golder which include:

- The site is underlain by some 40 ft. to 50 ft. of lacustrine clay and glacial till overburden. A series of carbonate deposits extend from the overburden to depths of about 600 ft. Underlying the carbonate deposits is a sequence of sedimentary rocks which extends to the Precambrian basement rock at a depth of about 2,900 ft.

- The water table in the overburden is close to the ground surface. Although all of the overburden below the water table is saturated, it is not considered an aquifer because of its very low hydraulic conductivity.

- The uppermost aquifer at the site is in the carbonate rocks of the Salina Group ("Big Lime" Formation). This confined aquifer and potentiometric surface is about 10 ft. to 15 ft. below ground surface.

- The ambient water quality in the carbonate aquifer is poor due to naturally high TDS and sulfate content. The base of the carbonate aquifer is considered to be the base of potable water in Ohio. The groundwater in the sedimentary rocks beneath the carbonate aquifer is generally a brine water.

- Groundwater level monitoring at the site indicates that on-site pumping has created a cone of depression in the upper portion of the shallow dolomite aquifer. This cone of depression may impede off-site migration of water in the upper portion of the dolomite.

- The direction of groundwater flow in the overburden is generally downward. The rate of flow to the underlying dolomite is less than 0.07 ft./yr. and is controlled by the low hydraulic conductivity of the soil.

- The natural groundwater gradient in the dolomite aquifer (disregarding the effects of on-site pumping) is thought to be directed toward the northwest. There is currently no data available regarding the vertical gradients within the dolomite, but it is possible that there is a slight upward flow component.

1.3.2.4 Additional Studies

Several additional studies have been performed since the above have been completed. These studies and investigations have centered on describing certain specific areas at the facility. A list of previous studies is provided in Table 3-1 of the RFI Work Plan.

1.3.3 Current Status

Based on reports and documents reviewed for the site, and a current assessment of all available information, the following target compounds and source area release mechanisms have been targeted for further investigation.

- Past Facility Operations. The potential for releases to the soil and groundwater at the facility from past operations vary depending on the nature of the SWMU. SWMUs with adequate secondary containment have a low potential for releases to the soil and groundwater. However, before the mid-1980's most of the SWMUs at the facility did not have adequate secondary containment and releases to the soil were not uncommon.

Most of the medium-size historical releases (50 to 5,000 gallons) resulted from failures of the PVC waste transfer lines which carried liquid waste between the former surface impoundments, tanks, filter buildings and pumphouses. These releases probably impacted the soil but had little effect on the groundwater because of the low permeability of the clay soil and many of the releases were immediately treated with lime and the contaminated soil was removed.

- Surface Impoundment. The former unlined surface impoundments have had the greatest impact on the soil and potentially the groundwater at the site. The increased hydraulic head created when the surface impoundments were filled with liquid wastes contributed to deeper and more pervasive contamination of soil beneath the surface impoundments. Several feet of contaminated clay were removed from some of the surface impoundments during closure.

  Studies performed at the site have statistically evaluated elevated concentrations in the monitoring wells on the site and have concluded one isolated location (L-19) as contaminated with a VOC. The deeper bedrock aquifer has a less likely potential for contamination due to the low permeability of the clay.

- Surface Water: Several large releases of liquid hazardous waste to both Little Raccoon Creek and Meyers Ditch have been documented. In 1979 a spill of up to 96,000 gallons of hazardous waste from the transfer line between surface impoundment 7 and 11 reached Meyers Ditch. The waste was reported to have been pumped out. On March 3, 1986, approximately 75,000 gallons of Waste Pile leachate was accidentally released to Little Raccoon Creek through surface water flow control gate G-1 at the Leachate Retention Pond. Subsequent testing of the creek water showed little contamination present. Other releases have occurred to the surface water, one as recently as April 1993. Due to the nature of the wastes which were released, an analysis of the streambed sediment for such constituents as, metals, PCBs and semi-volatile organics should be made to characterize this medium.

The historical release of contaminants as described above may have resulted in the some contamination of on-site soils and CWM Vickery facility buildings. Although significant attempts have been made to remediate the contamination i.e., on-soil removal, transfer-line excavations, etc., potentially concentrations of residual waste may remain in soils even though the primary sources

have been removed. At this time, these soils constitute a secondary source of contamination, potentially affecting human and environmental targets in the area of the site.

1.4 Project Objectives

Data Quality Objectives (DQOs) are qualitative and quantitative statements which specify the quality of the data required to support decisions made during RFI/CMS activities and are based on the end usage of the data to be collected. As such, different data usage may require different levels of data quality. There are at least five analytical levels which address various data uses and the QA/QC effort and methods required to achieve the desired level of quality.

1.4.1 Specific Objectives by Activity/Media

The purpose of the Phase I RFI is to gather sufficient information to evaluate whether releases have occurred at 53 solid waste management units (organized into 9 groups) and 9 areas of concern. If releases have occurred, the Phase I RFI will provide information on the nature of these releases (i.e., constituents and concentrations) and may provide some information on the vertical extent of contamination. Constituent and concentration data will be used qualitatively to assess whether unreasonable health risks are associated with the releases and to establish action levels for determining the need for further investigation and/or corrective measures.

The specific objectives of the data collection at the CWM Vickery facility are as follows:

Field monitoring of VOCs will be performed for the following purposes: i) general characterization of possible contaminant levels through casual screening of soil cores; ii) selection of samples for laboratory analysis through a specified headspace screening of soil samples; and iii) monitoring of ambient and work-space atmospheres for worker health and safety. This data collection activity will be performed on-site using an HNu. This data will require a screening level of data quality. This level of data quality requires documentation of instrument calibration in accordance with procedures specified by the manufacturer and at a frequency specified in Section 6 of this QAPjP.

At two of the SWMU groups (Groups A and C), where clean closure has not been performed, samples of the residual materials will be collected and analyzed for Appendix IX parameters using SW-846 methods to characterize the nature of these materials. This data would serve at the basis

for reducing parameter lists for future phases of RFI work (if such work is needed), and might be used in qualitative or quantitative risk assessments. As such, a confirmation level of data quality will be required.

At eight of the SWMU groups (Groups A, C, D, E, F, G, H, and I) and four of the AOCs (A, B, C, and F) soil samples will be collected will be analyzed for Appendix IX parameters using SW-846 methods to determine whether there has been a release of hazardous waste or hazardous waste constituents into the native soils adjacent to or underlying these locations. Where field observations indicate that contamination is present in the uppermost native soil, additional soil samples will be collected at greater depths to characterize the vertical extent of migration. These data will be used in qualitative and/or quantitative risk assessments. As such, a confirmation level of data quality will be required.

At one of the SWMU groups (Group B), a groundwater sample will be collected from the capillary drainage layer that underlies the TSCA Closure Cell and analyzed for Appendix IX parameters using SW-846 methods. This cell was built "over" the area that formerly contained SWMUs #4, 5 and 7, which were clean-closed. There is continual inward flow to the drainage layer, and the groundwater flowing into it has traveled through the clean-closed soils of the former SWMUs. These data will be used in qualitative and/or quantitative risk assessments. As such, a confirmation level of data quality will be required.

At one AOC (H), sediment samples will be collected along Meyers Ditch and analyzed for Appendix IX parameters using SW-846 methods to characterize residual effects of the single large release of processed acid wastewater that reached this drainageway. These data will be used in qualitative and/or quantitative risk assessments. As such, a confirmation level of data quality will be required.

At three SWMU's within Group I (No. 43, 44, and 45) soil samples will be collected and analyzed for fecal coliform as an indicator of leakage from these SWMUs. The SWMUs are used exclusively for the management of sanitary waste produced at three of the on site buildings. The facilities wastewater contained in these SWMUs is processed on site in the facility's sanitary wastewater treatment system and injected in to the deepwell.

The confirmational level of analytical quality provides the highest level of data quality and includes, but is not limited to the purposes of risk assessment, evaluation of remedial alternatives and

establishing cleanup levels. These analyses require full documentation of SW-846 analytical methods, sample preparation steps, data packages and data validation procedures necessary to provide defensible data. Quality Control must be sufficient to define the precision and accuracy of these procedures at every step. The sampling and analysis program is summarized in Table 1-1.

1.4.2 Project Target Parameters and Intended Data Usages

The target parameters for field monitoring for the Phase I RFI project at CWM Vickery are volatile organic compounds as detectable using an HNu. As described above, these data will be used for the following purposes: i) general characterization of possible contaminant levels through casual screening of soil cores; ii) selection of samples for laboratory analysis through a specified headspace screening of soil samples; and iii) monitoring of ambient and work-space atmospheres for worker health and safety.

The target parameters for laboratory analysis for the Phase I RFI project at CWM Vickery are the Appendix IX volatiles, semivolatile, pesticides (organochlorine and organophosphate), PCBs, herbicides, metals, cyanide, sulphide and dioxin, and they are listed in Tables 1-2 through 1-8. Intended data usages for the results of laboratory analysis are to determine the presence or absence of contamination, and --if contamination is found -- to establish action levels (through qualitative risk assessment) for determining the need for further RFI or CMS activity. As part of this process, the data may be compared with U.S. EPA's "data quality levels" for general information purposes. These levels are also shown in Tables 1-2 through 1-8. The data may also be used in a quantitative risk assessment (if necessary) at some future point in the Corrective Action process. If corrective measures are deemed necessary, the data may also be used to assess feasibility of using certain remediation technologies.

1.4.3 Data Quality Objectives

As described above, field monitoring data will require a screening level of data quality, and laboratory data will require a confirmation level of data quality.

1.5 Sample Network Design and Rationale

The sample network design and the rationale for sample locations (in respective media) is fully described in detail in the Field Sampling Plan - Section 5 of the Phase I RFI Work Plan. Sample matrices, analytical parameters and frequencies of sample collection for the 9 SWMU groups and the 9 AOCs are summarized in Table 1-1. As described above, it is possible that additional soil samples will be collected at locations where field observations indicate that the uppermost native soil is contaminated. The person making such decisions will be the Site Field Manager whose responsibilities are described in Section 2 of this QAPjP.

Maps showing intended soil, sediment and groundwater sampling locations are included as Figures in the Field Sampling Plan - Section 5 of the Phase I RFI Work Plan as follows:

- SWMU Group A -- Figure 5-7
- SWMU Group C -- Figure 5-8
- SWMU Group D -- Figure 5-9
- SWMU Group E -- Figure 5-10
- SWMU Group F -- Figure 5-11
- SWMU Group G -- Figure 5-12
- SWMU Group H -- Figure 5-13
- SWMU #15 -- Figure 5-14
- SWMU #20 -- Figure 5-15
- SWMU #28 -- Figure 5-16
- SWMU #41 -- Figure 5-17
- SWMU #42 -- Figure 5-18
- SWMU #43 -- Figure 5-19
- SWMU #44 & #45 -- Figure 5-20
- SWMU AOC A -- Figure 5-21
- SWMU AOC B -- Figure 5-22
- SWMU AOC C -- Figure 5-23
- SWMU AOC F -- Figure 5-24
- SWMU AOC H -- Figure 5-26

It is possible that some of the sampling locations will be changed on the basis of field observations or conditions. For example, on-site observations may show that the intended sampling location at a SWMU suspected of releasing liquids to the ground surface is not along a flow path away from the source, or that there is an area of stained soil which would more fully characterize the impacts of the release. In these cases, sampling locations would be changed to provide data more representative of site conditions. On the other hand, certain sampling locations may need to be moved due to overhead or underground obstructions that either limit accessibility to the location or create undue safety hazards to the field crew. The person making such decisions will be the Rust Field Team Leader whose responsibilities are described in Section 2 of this QAPjP.

1.6 Project Schedule

As required by conditions to the Part B Permit, Phase I RFI field activities will begin within 30 days of U.S. EPA's approval of the Phase I RFI Work Plan and QAPjP. A Task Bar Chart for project activities as a function of time following this approval is presented in Figure 1-1.

TABLE 1-1
SUMMARY OF SAMPLING AND ANALYSIS PROGRAM
CWM VICKERY PHASE I RFI

SWMU Groups & AOCS	Sample Matrix	Investigative Samples	Field Duplicates	Field Blanks	Trip Blanks	Matrix Spike	Matrix Spike Duplicate	Total Sample	Test Parameters
Group A: SWMU # 1, 2, 3, 8 & 16									
Soil Boring At Grid Nodes	Soil	24	3			2	2	31	VOC- Appendix IX
		24	3			2	2	31	SVOC- Appendix IX
		24	3			2	2	31	Pesticides, PCB's, Herbicides- Appendix IX
		24	3			2	2	31	Metals, Cyanide, Sulphide- Appendix IX
		24	3					27	Soil pH
		3						3	Geotechnical Testing*
		24						24	Qualitative Screening of Gross Organic Vapors
Soil Boring At Selected Locations	Soil	8	1			1	1	11	VOC- Appendix IX
		8	1			1	1	11	SVOC- Appendix IX
		8	1			1	1	11	Pesticides, PCB's, Herbicides- Appendix IX
		8	1			1	1	11	Metals, Cyanide, Sulphide- Appendix IX
		8	1					9	Soil pH
		1						1	Geotechnical Testing*
		8						8	Qualitative Screening of Gross Organic Vapors
Group B: SWMU # 4, 5, 7, 11, 12, 17 & 18									
Groundwater From Capillary Drain	Water	1	1	1	1	1	1	6	VOC- Appendix IX
		1	1	1	1	1	1	6	SVOC- Appendix IX
		1	1	1	1	1	1	6	Pesticides, PCB's, Herbicides, Dioxins- Appendix IX
		1	1	1	1	1	1	6	Metals, Cyanide, Sulphide- Appendix IX
Group C: SWMU # 6, 9 & 19									
Soil Boring At Grid Nodes	Soil	18	2			1	1	22	VOC- Appendix IX
		18	2			1	1	22	SVOC- Appendix IX
		18	2			1	1	22	Pesticides, PCB's, Herbicides- Appendix IX
		18	2			1	1	22	Metals, Cyanide, Sulphide- Appendix IX
		18	2					20	Soil pH
		2						2	Geotechnical Testing*
		18						18	Qualitative Screening of Gross Organic Vapors
Soil Boring At Selected Locations	Soil	5	1			1	1	8	VOC- Appendix IX
		5	1			1	1	8	SVOC- Appendix IX
		5	1			1	1	8	Pesticides, PCB's, Herbicides- Appendix IX
		5	1			1	1	8	Metals, Cyanide, Sulphide- Appendix IX
		5	1					6	Soil pH
		1						1	Geotechnical Testing*
		5						5	Qualitative Screening of Gross Organic Vapors
Group D: SWMU # 12, 13 & 14									
Soil Boring At Grid Nodes	Soil	33	4			2	2	41	VOC- Appendix IX
		33	4			2	2	41	SVOC- Appendix IX
		33	4			2	2	41	Pesticides, PCB's, Herbicides- Appendix IX
		33	4			2	2	41	Metals, Cyanide, Sulphide- Appendix IX
		33	4					37	Soil pH
		4						4	Geotechnical Testing*
		33						33	Qualitative Screening of Gross Organic Vapors

**Note: Geotechnical testing will include cation exchange capacity, Atterberg Limits, moisture content, grainsize distribution and total organic carbon.*

TABLE 1-1 (cont.)
SUMMARY OF SAMPLING AND ANALYSIS PROGRAM
CWM VICKERY PHASE I RFI

SWMU Groups & AOCS	Sample Matrix	Investigative Samples	Field Duplicates	Field Blanks	Trip Blanks	Matrix Spike	Matrix Spike Duplicate	Total Sample	Test Parameters
Group E: SWMU # 50, 51 & 52									
Soil Boring At Grid Nodes	Soil	3	1			1	1	6	VOC- Appendix IX
		3	1			1	1	6	SVOC- Appendix IX
		3	1			1	1	6	Pesticides, PCB's, Herbicides- Appendix IX
		3	1			1	1	6	Metals, Cyanide, Sulphide- Appendix IX
		3	1					4	Soil pH
		1						1	Geotechnical Testing*
		3						3	Qualitative Screening of Gross Organic Vapors
Group F: SWMU # 31, 32, 33, 34, 35, 36, 37, 38, 39 & 40									
Soil Boring At Grid Nodes	Soil	20	2			1	1	24	VOC- Appendix IX
		20	2			1	1	24	SVOC- Appendix IX
		20	2			1	1	24	Pesticides, PCB's, Herbicides- Appendix IX
		20	2			1	1	24	Metals, Cyanide, Sulphide- Appendix IX
		20	2					22	Soil pH
		2						2	Geotechnical Testing*
		20						20	Qualitative Screening of Gross Organic Vapors
Group G: SWMU # 21, 22, 23, 24, 25, 26, 27, 29 & 30									
Soil Boring At Grid Nodes	Soil	13	2			1	1	17	VOC- Appendix IX
		13	2			1	1	17	SVOC- Appendix IX
		13	2			1	1	17	Pesticides, PCB's, Herbicides- Appendix IX
		13	2			1	1	17	Metals, Cyanide, Sulphide- Appendix IX
		13	2					15	Soil pH
		2						2	Geotechnical Testing*
		13						13	Qualitative Screening of Gross Organic Vapors
Group H: SWMU # 46, 47, 48 & 49									
Soil Boring At Grid Nodes	Soil	4	1			1	1	7	VOC- Appendix IX
		4	1			1	1	7	SVOC- Appendix IX
		4	1			1	1	7	Pesticides, PCB's, Herbicides- Appendix IX
		4	1			1	1	7	Metals, Cyanide, Sulphide- Appendix IX
		4	1					5	Soil pH
		1						1	Geotechnical Testing*
		4						4	Qualitative Screening of Gross Organic Vapors
Group I: SWMU # 15, 20, 28, 41, 42, 43, 44 & 45									
Oil Recovery (#15) Soil Boring At Grid Nodes	Soil	12	2			1	1	16	VOC- Appendix IX
		12	2			1	1	16	SVOC- Appendix IX
		12	2			1	1	16	Pesticides, PCB's, Herbicides- Appendix IX
		12	2			1	1	16	Metals, Cyanide, Sulphide- Appendix IX
		12	2					14	Soil pH
		2						2	Geotechnical Testing*
		12						12	Qualitative Screening of Gross Organic Vapors

**Note: Geotechnical testing will include cation exchange capacity, Atterberg Limits, moisture content, grainsize distribution and total organic carbon.*

TABLE 1-1 (cont.)
SUMMARY OF SAMPLING AND ANALYSIS PROGRAM
CWM VICKERY PHASE I RFI

SWMU Groups & AOCS	Sample Matrix	Investigative Samples	Field Duplicates	Field Blanks	Trip Blanks	Matrix Spike	Matrix Spike Duplicate	Total Sample	Test Parameters
Group I: SWMU # 15, 20, 28, 41, 42, 43, 44 & 45 (cont.)									
Lab Waste Tank (#20) Soil Boring At Grid Nodes		1	1			1	1	4	VOC- Appendix IX
		1	1			1	1	4	SVOC- Appendix IX
		1	1			1	1	4	Pesticides, PCB's, Herbicides- Appendix IX
		1	1			1	1	4	Metals, Cyanide, Sulphide- Appendix IX
		1	1					2	Soil pH
		1						1	Geotechnical Testing*
		1						1	Qualitative Screening of Gross Organic Vapors
Sluice Pit (#28) Soil Boring At Selected Locations	Soil	4	1			1	1	7	VOC- Appendix IX
		4	1			1	1	7	SVOC- Appendix IX
		4	1			1	1	7	Pesticides, PCB's, Herbicides- Appendix IX
		4	1			1	1	7	Metals, Cyanide, Sulphide- Appendix IX
		4	1					5	Soil pH
		1						1	Geotechnical Testing*
		4						4	Qualitative Screening of Gross Organic Vapors
PCB Storage Area (#41) Soil Boring At Selected Locations	Soil	3	1			1	1	6	PCB's Appendix IX
		3	1					4	Soil pH
		1						1	Geotechnical Testing*
		3						3	Qualitative Screening of Gross Organic Vapors
Maintenance Oil Tank (#42) Soil Boring At Selected Locations	Soil	1	1			1	1	4	PCB's
		1	1			1	1	4	Metals
		1	1					2	Soil pH
		1						1	Geotechnical Testing*
		1						1	Qualitative Screening of Gross Organic Vapors
Sanitary WWTS (#43) Soil Boring At Selected Locations	Soil	2	1					3	Fecal Coliform
		2	1					3	Soil pH
		1						1	Geotechnical Testing*
		2						2	Qualitative Screening of Gross Organic Vapors
Cess Pits (#44 & #45) Soil Boring At Selected Locations	Soil	2	1					3	Fecal Coliform
		2	1					3	Soil pH
		1						1	Geotechnical Testing*
		2						2	Qualitative Screening of Gross Organic Vapors
AOC A									
Transfer Pipeline Maintenance Tanks Soil Boring At Selected Locations	Soil	22	3			2	2	29	VOC- Appendix IX
		22	3			2	2	29	SVOC- Appendix IX
		22	3			2	2	29	Pesticides, PCB's, Herbicides- Appendix IX
		22	3			2	2	29	Metals, Cyanide, Sulphide- Appendix IX
		22	3					25	Soil pH
		2						2	Geotechnical Testing*
		22						22	Qualitative Screening of Gross Organic Vapors

**Note: Geotechnical testing will include cation exchange capacity, Atterberg Limits, moisture content, grainsize distribution and total organic carbon.*

TABLE 1-1 (cont.)
SUMMARY OF SAMPLING AND ANALYSIS PROGRAM
CWM VICKERY PHASE I RFI

SWMU Groups & AOCS	Sample Matrix	Investigative Samples	Field Duplicates	Field Blanks	Trip Blanks	Matrix Spike	Matrix Spike Duplicate	Total Sample	Test Parameters
AOC B									
North Parking Lot Truck Unloading Facility Soil Boring At Selected Locations	Soil	2	1			1	1	5	VOC- Appendix IX
		2	1			1	1	5	SVOC- Appendix IX
		2	1			1	1	5	Pesticides, PCB's, Herbicides- Appendix IX
		2	1			1	1	5	Metals, Cyanide, Sulphide- Appendix IX
		2	1					3	Soil pH
		1						1	Geotechnical Testing*
		2						2	Qualitative Screening of Gross Organic Vapors
AOC C									
Pug Mill Staging Area (Hay Mill) Soil Boring At Selected Locations	Soil	2	1			1	1	5	VOC- Appendix IX
		2	1			1	1	5	SVOC- Appendix IX
		2	1			1	1	5	Pesticides, PCB's, Herbicides- Appendix IX
		2	1			1	1	5	Metals, Cyanide, Sulphide- Appendix IX
		2	1					3	Soil pH
		1						1	Geotechnical Testing*
		2						2	Qualitative Screening of Gross Organic Vapors
AOC F									
Truck Sampling Area & Inspection Bay Collection Tank Soil Boring At Selected Locations	Soil	1	1			1	1	4	VOC- Appendix IX
		1	1			1	1	4	SVOC- Appendix IX
		1	1			1	1	4	Pesticides, PCB's, Herbicides- Appendix IX
		1	1			1	1	4	Metals, Cyanide, Sulphide- Appendix IX
		1	1					2	Soil pH
		1						1	Geotechnical Testing*
		1						1	Qualitative Screening of Gross Organic Vapors
AOC H									
Transfer Pipeline Soil Boring At Selected Locations	Soil	7	1			1	1	10	VOC- Appendix IX
		7	1			1	1	10	SVOC- Appendix IX
		7	1			1	1	10	Pesticides, PCB's, Herbicides- Appendix IX
		7	1			1	1	10	Metals, Cyanide, Sulphide- Appendix IX
		7	1					8	Soil pH
		2						2	Geotechnical Testing*
		7						7	Qualitative Screening of Gross Organic Vapors

**Note: Geotechnical testing will include cation exchange capacity, Atterberg Limits, moisture content, grainsize distribution and total organic carbon.*

TABLE 1-2
REPORTING LIMITS AND DATA QUALITY LEVELS
APPENDIX IX VOLATILE ORGANICS BY METHOD 8240B

	GP REPORTING LIMIT		DATA QUALITY LEVEL (DQL)	
PARAMETERS	SOIL (µg/kg)	WATER (µg/L)	SOIL (µg/kg)	GROUND WATER (µg/L)
Acetone	10	10	9,200,000	770
Acetonitrile	100	100	230,000	220
Acrolein	20	20	780,000	730
Allyl Chloride	5	5	200,000	180
Benzene	5	5	2,700	0.62
Bromodichloromethane	5	5	2,900	0.29
Bromoform	5	5	110,000	11
Bromomethane	10	10	60,000	11
2-Butanone (MEK)	10	10	5,200,000	---
Carbon disulfide	5	5	53,000	28
Carbon tetrachloride	5	5	920	0.26
Chlorobenzene	5	5	300,000	52
2-Chloro-1,3-butadiene	10	10	---	---
Chloroethane	10	10	270,000	710
Chloroform	5	5	960	0.28
Chloromethane	10	10	3,700	2.3
Dibromochloromethane	5	5	10,000	1
1,2-Dibromo-3-chloropropane	100	100	610	0.061
1,2-Dibromoethane	5	5	19	0.00097
Dibromomethane	5	5	390,000	370
trans-1,4-Dichloro-2-butene	100	100	15	0.0019
Dichlorodiflouromethane	5	5	380,000	520
1,1-Dichloroethane	5	5	400,000	1,000
1,2-Dichloroethane	5	5	840	0.2
1,1-Dichloroethene	5	5	70	0.068
1,2-Dichloroethene (total)	5	5	620,000	100
1,2-Dichloropropane	5	5	1,300	0.26
cis-1,3-Dichloropropene	5	5	1,000	0.13
trans-1,3-Dichloropropene	5	5	1,000	0.13
1,4-Dioxane	20	20	32,000	1.6
Ethylbenzene	5	5	58,000	700
Ethyl methacrylate	5	5	38,000	690
2-Hexanone	10	10	50	50
Isobutyl alcohol	50	50	---	50
Methacrylonitrile	5	5	56,000	1.4

TABLE 1-2 (cont.)
REPORTING LIMITS AND DATA QUALITY LEVELS
APPENDIX IX VOLATILE ORGANICS BY METHOD 8240B

	GP REPORTING LIMIT		DATA QUALITY LEVEL (DQL)	
PARAMETERS	SOIL (µg/kg)	WATER (µg/L)	SOIL (µg/kg)	GROUND WATER (µg/L)
Methylene chloride	5	5	22,000	5
Methyl iodide	5	5	5	5
Methyl methacrylate	5	5	3,200,000	2,900
4-Methyl-2-pentanone (MIBK)	10	10	2,000,000	1,800
Pentachloroethane	5	5	10	5
Propionitrile	50	50	100	5
Styrene	5	5	13,000,000	1,500
1,1,1,2-Tetrachloroethane	5	5	10,000	0.69
1,1,2,2-Tetrachloroethane	5	5	2,100	0.088
Toluene	5	5	280,000	930
1,1,1-Trichloroethane	5	5	300,000	200
1,1,2-Trichloroethane	5	5	3,900	0.32
Trichloroethene	5	5	14,000	2.5
Trichloroflouromethane	5	5	410,000	1,700
1,2,3-Trichloropropane	5	5	310,000	40
Vinyl acetate	10	10	39,000,000	37,000
Vinyl chloride	10	10	10	0.028
Xylenes (total)	5	5	99,000	1,900

TABLE 1-3
REPORTING LIMITS AND DATA QUALITY LEVELS
APPENDIX IX VOLATILE ORGANICS BY METHOD 8270B

	GP REPORTING LIMIT		DATA QUALITY LEVEL (DQL)	
PARAMETERS	SOIL (µg/kg)	WATER (µg/L)	SOIL (µg/kg)	GROUND WATER (µg/L)
Acenapthene	330	10	36,000	460
Acenaphthylene	330	10	660	10
Acetophenone	330	10	3,900,000	3,700
2-Acetylaminoflourene	660	20	---	10
Aniline	330	10	11,000	11
Anthracene	330	10	1,900	2,300
Aramite	660	20	34,000	3.4
Benzo(a)anthracene	330	10	660	0.1
Benzo(b)flouranthene	330	10	660	0.12
Benzo(k)flouranthene	330	10	660	0.12
Benzo(ghi)perylene	330	10	660	10
Benzo(a)pyrene	330	10	660	0.012
Bezyl alcohol	330	10	12,000,000	11,000
bis(2-Chloroethoxy)methane	330	10	660	10
bis(2-Chloroethyl)ester	330	10	150	0.016
bis(2-Chloroisopropyl)ether	330	10	12,000	1.2
bis(2-ethylhexyl)phthlate	330	10	61,000	6.1
4-Bromophenyl phenyl ether	330	10	660	10
Butyl benzyl phthlate	330	10	7,800,000	100
4-Chloroaniline	330	10	160,000	150
Chlorobenzailate	330	10	3,200	0.32
4-Chloro-3-methylphenol	330	10	---	---
2-Chloronapthalene	330	10	3,100,000	2,900
2-Chlorophenol	330	10	200,000	180
4-Chlorophenyl phenyl ether	330	10	660	10
Chrysene	330	10	800	0.2
ciS/trans-Diallate	330	10	---	---
Dibenzofuran	330	10	660	10
Di-n-butyl phthalate	330	10	3,900,000	3,700
Dibenz(a,h)anthracene	330	10	120	0.012
1,2-Dichlorobenzene	330	10	230,000	480
1,3-Dichlorobenzene	330	10	280,000	600
1,4-Dichlorobenzene	330	10	1,700	0.75
3,3'-Dichlorobenzene	660	20	1,900	0.19
2,4-Dichlorophenol	330	10	120,000	110

TABLE 1-3 (cont.)
REPORTING LIMITS AND DATA QUALITY LEVELS
APPENDIX IX VOLATILE ORGANICS BY METHOD 8270B

	GP REPORTING LIMIT		DATA QUALITY LEVEL (DQL)	
PARAMETERS	SOIL (µg/kg)	WATER (µg/L)	SOIL (µg/kg)	GROUND WATER (µg/L)
2,6-Dichlorophenol	330	10	---	10
Diethyl phthalate	330	10	31,000,000	29,000
Dimethoate	660	20	7,800	7.3
p-(Dimethylamino)azobenzene	330	10	---	10
7,12-Dimethylbenz(a)anthracene	330	10	---	10
3,3'-Dimethylbenzidine	330	10	93	0.0093
a,a-Dimethylphenethyleamine	330	10	---	10
2,4-Dimethylphenol	330	10	780,000	730
Dimethyl phthalate	330	10	100,000,000	370,000
1,3-Dinotrobenzene	330	10	3,900	3.7
4,6-Dinitro-2-methylphenol	1,650	50	3,300	50
2,4-Dinitrophenol	1,650	50	78,000	73
2,4-Dinitrotoluene	330	10	78,000	73
2,6-Dinitrotoluene	330	10	1,300	0.13
Di-n-octyl phthalate	330	10	780,000	730
Diphenylamine	330	10	980,000	910
Ethyl methanesulfonate	660	20	---	10
Flouranthene	330	10	1,600,000	1,500
Flourene	330	10	28,000	310
Hexachlorobenzene	330	10	530	1
Hexachlorobutadiene	330	10	11,000	1.1
Hexachlorocyclopentadiene	330	10	270,000	26
Hexachloroethane	330	10	39,000	6.1
Hexachloropropene	330	10	---	10
Indeno(1,2,3-cd)pyrene	330	10	1,200	0.4
Isodrin	660	20	10	10
Isophorone	330	10	900,000	90
Isosafrole	330	10	---	10
Methapyrilene	3,300	100	---	10
3-Methylcholanthrene	330	10	---	10
Methyl methansulfonate	495	15	---	10
2-Methylnaphthalene	330	10	660	10
2-Methylphenol	330	10	2,000,000	---
3 or 4-Methylphenol	330	10	2,000,000	---
Naphthalene	330	10	80,000	31
1,4-Naphthoquinone	330	10	---	10
1-Naphthalamine	330	10	---	10
2-Naphthalamine	330	10	---	10
2-Nitroanaline	1,650	50	2,300	2.2
3-Nitroanaline	1,650	50	3,300	50

TABLE 1-3 (cont.)
REPORTING LIMITS AND DATA QUALITY LEVELS
APPENDIX IX VOLATILE ORGANICS BY METHOD 8270B

	GP REPORTING LIMIT		DATA QUALITY LEVEL (DQL)	
PARAMETERS	SOIL (µg/kg)	WATER (µg/L)	SOIL (µg/kg)	GROUND WATER (µg/L)
4-Nitroanaline	660	20	---	50
Nitrobenzene	330	10	20,000	18
2-Nitrophenol	330	10	300	5
4-Nitrophenol	1,650	50	190	10
4-Nitroquinoline-1-oxide	1,320	40	---	10
n-Nitrosodi-n-butylamine	330	10	160	0.016
n-Nitrosodiethylamine	660	20	5.7	0.00057
n-Nitrosodimethylamine	330	10	17	0.0017
n-Nitrosodipheylamine	330	10	170,000	17
n-Nitrosodipropylene	330	10	120	0.012
n-Nitrosomethylethylamine	330	10	39	0.0039
n-Nitrosomorholine	330	10	---	10
n-Nitrosopiperidine	660	20	---	10
n-Nitrosopyrrolidine	330	10	---	40
5-Notro-o-toluidine	330	10	---	10
Pentachlorobenzene	330	10	31,000	29
Pentachlorophenol	1,650	50	7,100	0.71
Phenacetin	660	20	---	10
Phenanthrene	330	10	660	10
Phenol	330	10	23,000,000	22,000
1,4-Phenylenediamine	330	10	---	---
2-Picoline	330	10	---	5
Pronamide	330	10	2,900,000	---
Pyrene	330	10	1,200,000	1,100
Pyridine	330	10	3,900	37
Safrole	330	10	---	10
1,2,4,5-Tetrachlorobenzene	330	10	12,000	11
2,3,4,6-Tetrachlorophenol	330	10	1,200,000	1,100
Tetraethyl dithiopyrophosphate	35	0.70	20,000	18
Thionazine	660	20	---	---
o-Toluidine	330	10	---	10
1,2,3-Trichlorobenzene	330	10	93,000	23
2,4,5-Trichlorophenol	330	10	930	3,700
2,4,6-Trichlorophenol	330	10	77,000	7.7
o,o,o-Triethyl phosphorothioate	330	10	---	10
1,3,5-Trinitrobenzene	330	10	2,000	1.8

TABLE 1-4
REPORTING LIMITS AND DATA QUALITY LEVELS
APPENDIX IX ORGANOCHLORINE PESTICIDES / PCB's BY METHOD 8080A

	GP REPORTING LIMIT		DATA QUALITY LEVEL (DQL)	
PARAMETERS	SOIL (µg/kg)	WATER (µg/L)	SOIL (µg/kg)	GROUND WATER (µg/L)
Aldrin	1.34	0.04	50	0.005
alpha BHC	1.01	0.03	2.0	0.05
beta BHC	2.01	0.06	4.0	0.05
delta BHC	3.02	0.09	6.0	0.1
gamma BHC/Lindane	1.34	0.04	2.68	0.066
Chlorodane	4.69	0.14	660	0.066
4,4'-DDD	3.69	0.11	3,500	0.35
4,4'-DDE	1.34	0.04	2,500	0.25
Dieldrin	0.67	0.02	53	0.0053
Endosulfan I	4.69	0.14	2,000	1.8
Endosulfan II	1.34	0.04	2,000	1.8
Endosulfan Sulfate	22.11	0.66	44.2	0.5
Endrin	2.01	0.06	12,000	0.2
Endrin aldehyde	7.71	0.23	15.4	0.2
Heptachlor	1.01	0.03	190	0.019
Heptachlor epoxide	27.81	0.83	94	0.0094
Hexachlorophene	1650	50	12,000	11
Kepone	660	20	47	0.0047
Methoxychlor	58.96	1.76	200,000	40
Toxaphene	80.4	2.40	770	0.077
Arochlor 1016	16.75	0.50	110	0.5
Arochlor 1221	16.75	0.50	110	0.5
Arochlor 1232	16.75	0.50	110	0.5
Arochlor 1242	21.78	0.65	110	0.5
Arochlor 1248	33.5	1.00	110	0.5
Arochlor 1254	33.5	1.00	110	0.5
Arochlor 1260	33.5	1.00	110	0.5

TABLE 1-5
REPORTING LIMITS AND DATA QUALITY LEVELS
APPENDIX IX ORGANOPHOSPHATE PESTICIDES BY METHOD 8141A

	GP REPORTING LIMIT		DATA QUALITY LEVEL (DQL)	
PARAMETERS	SOIL (µg/kg)	WATER (µg/L)	SOIL (µg/kg)	GROUND WATER (µg/L)
Disulfoton	4.69	0.7	1,600	1.5
Phorate	2.68	0.4	7,800	7.3
Ethyl parathion	4.02	0.6	---	---
Famphur	660	20.0	---	10
Methyl parathion	8.04	1.2	20	0.5

TABLE 1-6
REPORTING LIMITS AND DATA QUALITY LEVELS
APPENDIX IX ORGANOCHLORINE HERBICIDES BY METHOD 8150B

	GP REPORTING LIMIT		DATA QUALITY LEVEL (DQL)	
PARAMETERS	SOIL (µg/kg)	WATER (µg/L)	SOIL (µg/kg)	GROUND WATER (µg/L)
2,4-D	20	1.0	390,000	70
Dinosab	14	0.7	39,000	7
2,4,5-TP (Silvex)	2	0.1	110	5
2,4,5-T	2	0.1	390,000	370

TABLE 1-7
REPORTING LIMITS AND DATA QUALITY LEVELS
APPENDIX IX METALS AND INORGANICS

PARAMETERS	GP REPORTING LIMIT		DATA QUALITY LEVEL (DQL)		METHOD USED
	SOIL (µg/kg)	WATER (µg/L)	SOIL (µg/kg)	GROUND WATER (µg/L)	
Antimony	170	1.7	31,000	6	7041
Arsenic (GFAA)	180	1.8	970	50	7060
Barium	2300	23.0	5,500,000	2,000	6010A
Beryllium	110	1.1	400	0.02	6010A
Cadmium	400	4.0	39,000	5	6010A
Chromium	600	6.0	940,000	100	6010A
Cobalt	1400	14.0	100	10	6010A
Copper	900	9.0	2,900,000	1,300	6010A
Lead (GFAA)	90	0.9	500,000	4	7421
Mercury	200	0.2	23,000	2	7471A
Nickel	2000	20.0	1,600,000	100	6010A
Selenium (GFAA)	160	1.6	390,000	50	7740
Silver	70	0.7	390,000	50	7761
Thallium (GFAA)	280	2.8	---	2	7841
TIn	4000	40.0	47,000,000	22,000	6010A
Vanadium	2000	20.0	550,000	260	6010A
Zinc	800	8.0	23,000,000	11,000	6010A
Cyanide	1000	5.0	1,600,000	200	9010A
Sulfide	5000	1,000.0	---	---	376.1

TABLE 1-8
REPORTING LIMITS AND DATA QUALITY LEVELS
APPENDIX IX DIOXINS BY METHOD 8280

	GP REPORTING LIMIT		DATA QUALITY LEVEL (DQL)	
PARAMETERS	SOIL (µg/kg)	WATER (µg/L)	SOIL (µg/kg)	GROUND WATER (µg/L)
Dioxin	2	0.01	---	0.01

**Note: This analysis will be performed by PACE, Inc., 284 Raritan Center Pkwy., P.O. Box 7807, Edison, NJ 08818*

FIGURE 1-1
CWM VICKERY
RFI WORKPLAN SCHEDULE OF ACTIVIITES

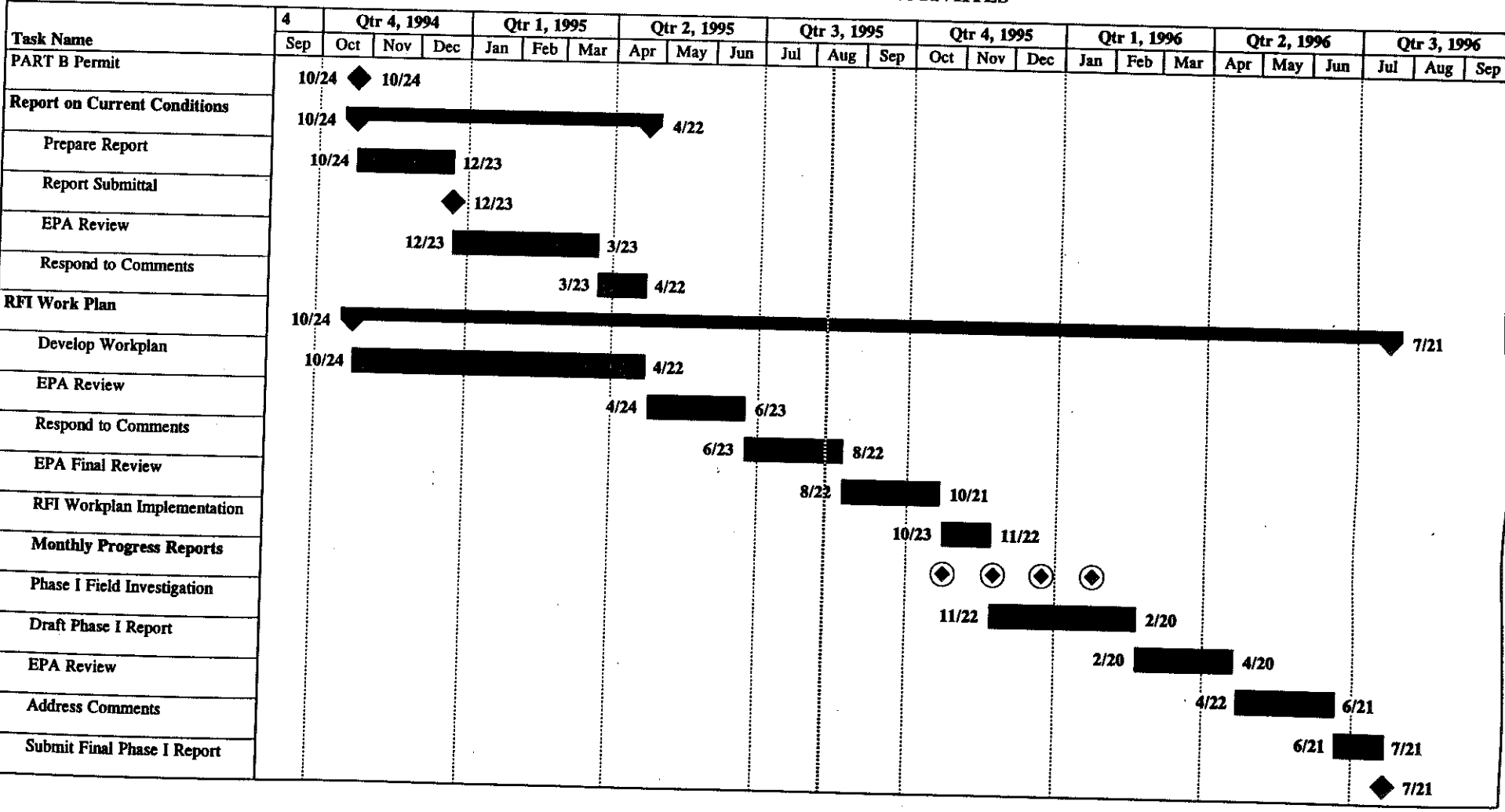

Project #: 38627
C:\RAL\38627\SCHED.MPP
Date: 8/11/95

Task
Progress
Milestone
Summary
Rolled Up Task
Rolled Up Milestone
Rolled Up Progress

SECTION 2

PROJECT ORGANIZATION AND RESPONSIBILITY

At the direction of the U.S. EPA RCRA Project Coordinator (RPC), Rust will have overall responsibility for the Phase I RFI. Rust will perform the field investigation, evaluate the data, and prepare the RFI report. Project management will also be provided by Rust in concert with the CWM Vickery facility. The various quality assurance, field, laboratory and management responsibilities of key project personnel are defined below.

2.1 Project Organization Chart

A Project Organization Chart is presented in Figure 2-1. It shows the roles, individuals and lines of authority for the Phase I RFI project, and includes all of the individuals discussed below.

2.2 Management Responsibilities

U.S. EPA RCRA Project Coordinator

Thomas W. Matheson will be the U.S. EPA RCRA Project Coordinator (RPC). He will have overall responsibility for all phases of the RFI/CMS.

CWM Vickery Project Manager

Michael Curry will be the CWM Vickery Project Manager. He will be responsible for implementing the project, and has the authority to commit the resources necessary to meet project objectives and requirements. The CWM Vickery Project Manager's primary function is to ensure that technical, financial, and scheduling objectives are achieved successfully. The CWM Vickery Project Manager will report directly to the U.S. EPA RPC and will provide the major point of contact and control for matters concerning the project. The CWM Vickery Project Manager will:

- Define project objectives;

- Establish project policy and procedures to address the specific needs of the project as a whole, as well as the objectives of each task;
- Acquire and apply technical and corporate resources as needed to ensure performance within budget and schedule constraints;
- Review the work performed on each task to ensure its quality, responsiveness, and timeliness;
- Review and analyze overall task performance with respect to planned requirements and authorizations;
- Approve all reports (deliverables) before their submission to U.S. EPA Region 5;
- Ultimately be responsible for the preparation and quality of interim and final reports; and
- Represent the project team at meetings and public hearings.

Rust Project Manager

Richard Zweig will be the Rust Project Manager. He will have overall responsibility for ensuring that the project meets U.S. EPA's objectives and CWM Vickery quality standards. The Rust Project Manager will provide assistance to the CWM Vickery Project Manager in terms of writing and distributing the QAPjP to all those parties connected with the project (including the laboratory). The Rust project manager will report directly to the CWM Vickery Project Manager and is responsible for technical quality control and project oversight.

Rust Project Supervisor

Edward Need will be the Rust Project Supervisor. He will report directly to the CWM Vickery Project Manager and is responsible for the overall quality of the service provided by Rust on the project. Independent of the Rust Project Manager, the Rust Project Supervisor will provide oversight of technical, budetary and scheduling aspect of the project and serve as a resource to both the CWM Vickery Project Manager and the Rust Project Manager. He will also be responsible for managing the quality assurance and quality control aspects of the project, including the data validation process.

2.3 Quality Assurance Responsibilities

Rust QA Officer

Roy Peterson will be the Rust QA Officer. He will report to the Rust Project Supervisor and will be responsible for ensuring that all field activities are performed in compliance with Rust procedures and with the approved QAPjP and Field Sampling Plan. Thus, the Rust QA Officer will be responsible for performing the internal field audits, and for direct supervision of the data validation process.

Rust Data Validator

Dinesh Patel will be the Rust Data Validator. He will be responsible for performing the data validation in accordance with the procedures described in Section 9 of this QAPjP.

U.S. EPA Region 5 Quality Assurance Manager (RQAM)

EPA RQAM has the responsibility to review and approve all Quality Assurance Project Plans (QAPjPs). Additional U.S. EPA responsibilities for the project include:

- Conducting external Performance and System Audits of GP Environmental's laboratory
- Reviewing and evaluating analytical field and laboratory procedures.

2.4 Laboratory Responsibilities

Samples collected during the Phase I RFI at CWM Vickery will be sent to the following laboratories:

1) GP Environmental Services
   202 Perry Parkway
   Gaithersburg, MD 20877
   (301) 926-6802

   This laboratory will be used for analysis of all organic and inorganic parameters except dioxin.

2) Pace, Inc.
284 Raritan Center Parkway
P.O. Box 7807
Edison, NJ 08818
(908) 225-6792

This laboratory will be used for laboratory analysis of dioxin.

3) Rust E&I, Inc.
12 Metro Park Road
Albany, New York 12205
(518) 458-1313

This laboratory will be used for analysis of geotechnical parameters (e.g. Atterburg Limits, percent moisture, etc.).

GP Environmental Services Project Manager

The GP Environmental Services Project Manager, Ken Ives, will report directly to the Rust Project Manager and will be responsible for the following:

- Ensuring all resources of the laboratory are available on an as-required basis; and
- Coordinating with Pace Laboratories for performance of dioxin analysis.
- Overviewing of final analytical reports.

GP Environmental Services Operations Manager

GP Environmental Services Operations Manager, Albert Ellis, will report to the GP Environmetal Services Project Manager and will be responsible for the following:

- Coordinating laboratory analyses;
- Supervising in-house chain-of-custody;
- Scheduling sample analyses;
- Overseeing data review;
- Overseeing preparation of analytical reports; and
- Approving final analytical reports prior to submission to Rust/CWM Vickery.

GP Environmental Services Quality Assurance Manager

GP Environmental Services QA Manager has the overall responsibility for data after it leaves the laboratory. GP Environmental Services QA Manager will communicate data issues through the GP Environmental Services Project Manager. In addition, the GP Environmental Services QA Manager will:

- Review and approve the QAPjP;
- Overview laboratory quality assurance;
- Overview QA/QC documentation;
- Conduct detailed data review;
- Determine whether to implement laboratory corrective actions, if required and also be responsible for formally approving corrective actions;
- Define appropriate laboratory QA procedures; and
- Prepare laboratory Standard Operation procedures.

GP Environmental Services Sample Custodian

GP Environmental Services Sample Custodian will report to the GP Environmental Services Operations Manager. Responsibilities of the GP Environmental Services sample custodian will include:

- Receiving and inspecting the incoming sample containers;
- Recording the condition of the incoming sample containers;
- Signing appropriate documents;
- Verifying chain-of-custody and its correctness;
- Notifying laboratory manager and laboratory supervisor of sample receipt and inspection;
- Assigning a unique identification number and customer number, and entering each into the sample receiving log;
- With the help of the operations manager, initiating transfer of the samples to appropriate lab sections; and
- Controlling and monitoring access/storage of samples and extracts.

GP Environmental Services Technical Staff

GP Environmental Services technical staff will be responsible for sample analysis and identification of corrective actions. The staff will report directly to the GP Environmental Services Operations Manager.

2.5 Field Responsibilities

Rust Field Team Leader

Jay Smerekanicz will be the Rust Field Team Leader. He will be responsible for leading and coordinating the day-to-day activities of the various resource specialists under his supervision. The Rust Field Team Leader is a highly experienced environmental professional and will report directly to the Rust Project Manager. Specific field team leader responsibilities include:

- Provision of day-to-day coordination with the CWM Vickery Project Manager on technical issues in specific areas of expertise;
- Developing and implementing field-related work plans, assurance of schedule compliance, and adherence to management-developed study requirements;
- Coordinating and managing field staff including sampling, drilling, and supervising field laboratory staff;
- Implementing QC for technical data provided by the field staff including field measurement data;
- Adhering to work schedules provided by the Rust Project Manager;
- Authoring, writing, and approving of text and graphics required for field team efforts;
- Coordinating and overseeing of technical efforts of subcontractors assisting the field team;
- Identifying problems at the field team level, resolving difficulties in consultation with the CWM Vickery Project Manager, implementing and documenting corrective action procedures, and provision of communication between team and upper management; and
- Participating in preparation of the final report.

Rust Field Technical Staff

The technical staff for this project will be drawn from Rust's pool of corporate resources. The technical team staff will be utilized to gather and analyze data, and to prepare various task reports and support materials. All of the designated technical team members are experienced

professionals who possess the degree of specialization and technical competence required to effectively and efficiently perform the required work.

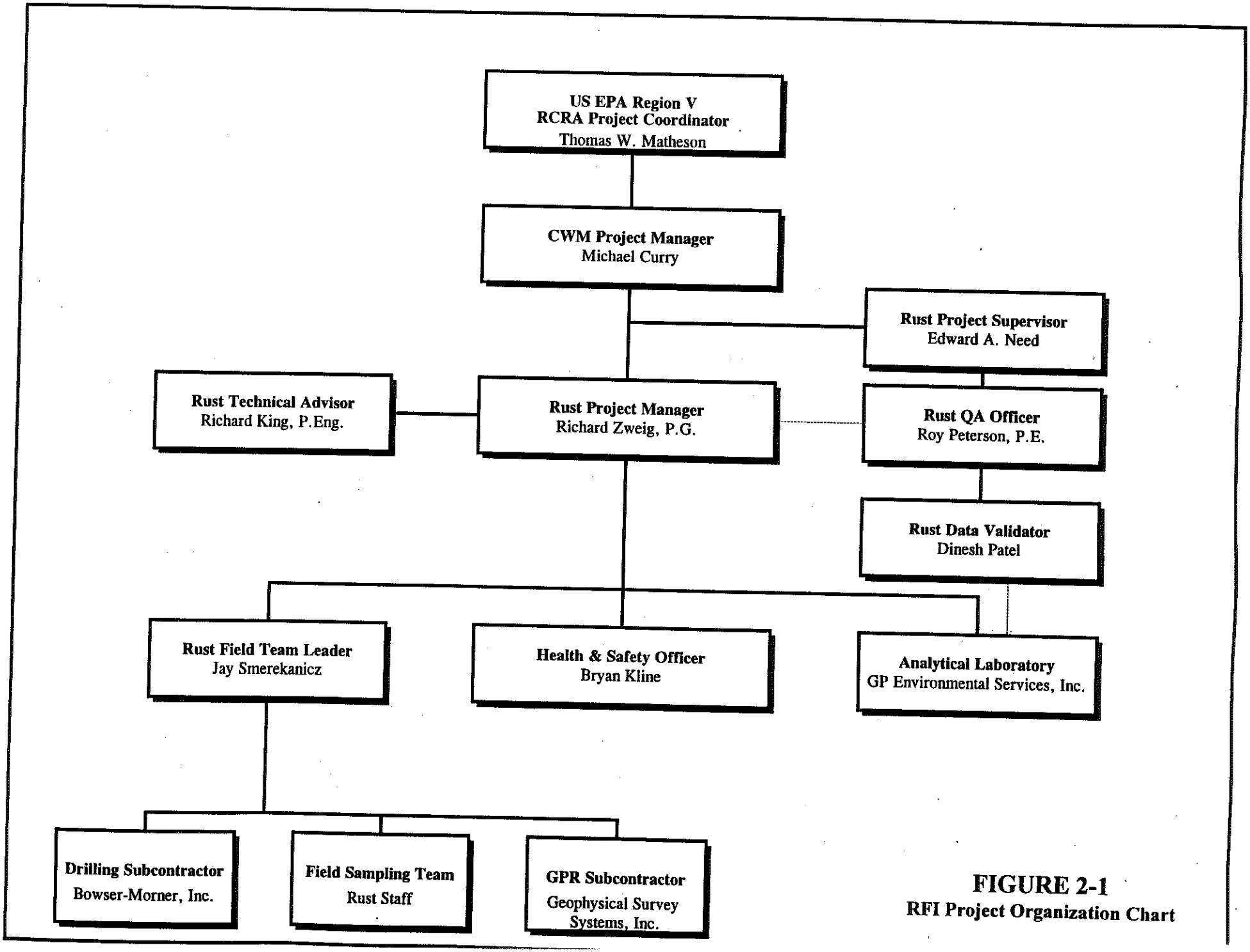

FIGURE 2-1
RFI Project Organization Chart

SECTION 3

QUALITY ASSURANCE OBJECTIVES FOR MEASUREMENT DATA

The overall QA objective for this project is to develop and implement procedures for field sampling, chain-of-custody, laboratory analysis, and reporting that will provide results which are legally defensible in a court of law. Specific procedures for sampling, chain-of-custody, laboratory instrument calibration, laboratory analysis, reporting of data, internal quality control, audits, preventive maintenance of field equipment, and corrective action are described in other sections of this QAPjP. The purpose of this section is to address the specific objectives for precision, accuracy, completeness, representativeness and comparability. This section also describes the level of Quality Control effort (i.e. the kind and frequency of QC samples) for the investigative program described in this QAPjP.

3.1 Precision

Precision is a measure of the degree to which two or more measurements are in agreement. The precision of field measurements (HNu screening for VOCs) will be assessed through replicate measurements; however, because VOCs will be "lost" as part of an initial measurement, the subsequent replicate measurement is expected to be biased "low". Thus, no formalized assessment (i.e., the calculation of relative percent difference) is planned.

Analytical precision will be assessed through the calculation of the relative percent difference (RPD) for the concentrations of spiked analytes in two replicate samples. The equation for calculating precision for this project can be found in Section 12 of this Phase I QAPjP. Field effects on analytical precision will be assessed through the collection and measurement of field duplicates at a rate of 1 duplicate per 10 analytical samples. The total number of field duplicates being collected for this project is shown in Table 1-1. Laboratory effects on analytical precision will be assessed through the use of laboratory duplicate samples and matrix spike/matrix spike duplicate (MS/MSD) samples. The total number of MS/MSD samples being collected for this project is shown in Table 1-1. Precision control limits for laboratory analysis are given in Tables 3-1 through 3-7.

3.2 Accuracy

Accuracy is the degree of agreement between an observed value and an accepted reference value. The accuracy of field measurements (HNu screening for VOCs) will be assessed through evaluation of calibration records maintained during the course of the field operations. The procedures for routine calibration of the HNu are described in Section 6 of this Phase I QAPjP. Thus, no formalized assessment (i.e., the calculation of percent recovery) is planned.

Analytical accuracy will be assessed through the calculation of the percent recovery (%R) of a known amount of selected analytes spiked into a designated sample. The equation for calculating accuracy in this project can be found in Section 12 of this Phase I QAPjP. Field effects on accuracy will be assessed through evaluation of sampling documentation showing adherence with all sample handling, preservation and holding times requirements. Laboratory effects on accuracy will be assessed through evaluation of surrogate recoveries in each sample analyzed, and through the analysis of matrix spikes (MS) for the determination of percent recoveries. The total number of MS samples being collected for this project is shown in Table 1-1. Accuracy control limits for laboratory analysis are given in Tables 3-1 through 3-7.

3.3 Completeness

Completeness is a measure of the amount of valid data obtained from a measurement system compared to the amount that was expected to be obtained under normal conditions. The calculation of completeness is described in Section 12 of this QAPjP. By their nature, the field screening measurements of VOCs are considered to be 100 percent complete. It is expected that GP Environmental Services will provide data meeting QC acceptance criteria for 95 percent or more for all sample tested using SW-846 methods. If this objective would not be met due to difficulties and/or problems in the laboratory, then additional samples be taken and analyzed to meet the objective.

3.4 Representativeness

Representativeness expresses the degree to which data accurately and precisely represent a characteristic of a population, parameter variations at a sampling point, a process condition, or an environmental condition. Representativeness is dependent upon the proper design of the

sampling program and will be satisfied by ensuring that the field sampling plan (FSP) is followed and that proper sampling techniques are used, proper analytical procedures are followed and holding times of samples are not exceeded.

3.5 Comparability

Comparability is an expression of the confidence with which one data set can be compared with another. Comparability is dependent upon the proper design of the sampling program and will be satisfied by ensuring that the FSP is followed and that proper sampling techniques are used. Planned analytical data will be comparable when similar sampling and analytical methods are used and documented in the QAPjP. Comparability is also dependent on similar QA objectives.

3.6 Level of Quality Control Effort

Field blank, trip blank, field duplicate, matrix spike and matrix spike duplicate samples will be analyzed to assess the quality of the data resulting from the field sampling programs. Field blanks will consist of deionized water placed in sample containers at the site using the same (decontaminated) equipment that will be used to collect the samples. Field blanks are used to check for contamination which may have been introduced as a result of the sampling procedures and/or from ambient field conditions. Field blanks will be collected at the rate of one per 10 or fewer *aqueous* investigative samples.

Trip blanks will consist of deionized water placed in sample containers in the laboratory. These samples will accompany the other (empty) sample containers to the site, be kept with them in the field, and accompany the filled samples containers back to the laboratory. Trip blanks are used to assess the potential for (volatile organic) contamination of samples due to contaminant migration during shipment and storage. One trip blank will accompany each cooler of *aqueous VOC* samples shipped to the laboratory.

Field duplicate samples will consist of distinct samples obtained from the same sampling point or location. They are analyzed to check for sampling and analytical reproducability. Duplicate samples will be collected at the rate of one per 10 or fewer investigative samples.

Matrix spike samples (which are prepared in the laboratory from extra investigative sample volume collected in the field) provide information about the effect of the sample matrix on the preparation and measurement methodology. The extra volumes required are triple the normal volume for VOC analysis and double the normal volume for other organics analysis. These extra volumes are in addition to the normal volume requirements for the investigative sample. All matrix spikes for organic analyses are performed in duplicate and are hereinafter referred to as MS/MSD samples. MS/MSD samples will be collected (for organics analysis) at the rate of one per 20 or fewer investigative samples. A matrix spike and laboratory duplicate will be analyzed for inorganic parameter analysis. These analyses must be performed on an aliquot from the original investigative sample container; the samples will be designated in the field as MS samples but no extra volume is required. The MS/LD analyses will be performed at the rate of one per 20 or fewer investigative samples.

The number of duplicate, field blank, trip blank, matrix spike, and matrix spike duplicate samples to be collected for the Phase I RFI at CWM Vickery are listed Table 1-1. Sampling procedures are specified in the Field Sampling Plan (Section 5 of the Phase I RFI Work Plan).

TABLE 3-1
PRECISION AND ACCURACY CRITERIA
APPENDIX IX VOLATILE ORGANICS BY METHOD 8240B

PARAMETER	PRECISION (RPD)		ACCURACY (%R)	
	Water	Soil	Water	Soil
Benzene	13	21	76-127	66-142
Chlorobenzene	11	21	75-130	60-133
1,1-Dichloroethene	14	22	61-145	59-172
Toluene	13	21	76-125	59-139
Trichloroethene	14	24	71-120	62-137

SURROGATE COMPOUND	PRECISION (RPD)		ACCURACY (%R)	
	Water	Soil	Water	Soil
4 Bromofluorobenzene	N/A	N/A	86-115	74-121
1, 2 Dichloroethane - d4	N/A	N/A	76-114	70-121
Toluene - d8	N/A	N/A	88-110	81-117

TABLE 3-2
PRECISION AND ACCURACY CRITERIA
APPENDIX IX SEMIVOLATILE ORGANICS BY METHOD 8270B

PARAMETER	PRECISION (RPD)		ACCURACY (%R)	
	Water	Soil	Water	Soil
Acenapthene	31	19	46-118	31-137
4-Chloro-3-methylphenol	42	33	23-97	26-103
2-Chlorophenol	40	50	27-123	25-102
1,4-Dichlorobenzene	28	27	36-97	28-104
2,4-Dinitrotoluene	38	47	24-96	28-89
4-Nitrophenol	50	50	10-80	11-114
n-Nitrosodi-n-propylamine	38	38	41-116	41-126
Pentachlorophenol	50	47	9-103	17-109
Phenol	42	35	12-89	26-90
Pyrene	31	36	26-127	35-142
1,2,4-Trichlorobenzene	28	23	39-98	38-107

SURROGATE COMPOUND	PRECISION (RPD)		ACCURACY (%R)	
	Water	Soil	Water	Soil
Nitrobenzene - d5	N/A	N/A	35-114	23-120
2-Fluorobiphenyl	N/A	N/A	43-116	30-115
p-Terphenyl-d14	N/A	N/A	33-141	18-137
Phenol	N/A	N/A	10-94	24-113
2-Fluorophenol	N/A	N/A	21-100	25-121
2, 4, 6 - Tribromophenol	N/A	N/A	10-123	19-122

TABLE 3-3
PRECISION AND ACCURACY CRITERIA
APPENDIX IX ORGANOCHLORINE PESTICIDES / PCBs BY METHOD 8080A

PARAMETER	PRECISION (RPD)		ACCURACY (%R)	
	Water	Soil	Water	Soil
Aldrin	22	43	40-120	34-132
gamma BHC/Lindane	15	50	56-123	46-127
Dieldrin	18	38	52-126	31-134
Endrin	21	45	56-121	42-139
Heptachlor	20	31	40-131	35-130

SURROGATE COMPOUND	PRECISION (RPD)		ACCURACY (%R)	
	Water	Soil	Water	Soil
Dibutylchloroendate	N/A	N/A	24-150*	24-150*

**Advisory Surrogate minimum 10% recovery used as action limit.*

TABLE 3-4
PRECISION AND ACCURACY CRITERIA
APPENDIX IX ORGANOPHOSPHATE PESTICIDES BY METHOD 8141A

PARAMETER	PRECISION (RPD)		ACCURACY (%R)	
	Water	Soil	Water	Soil
Ethyl parathion	25	50	75-125	65-140
Tetraethyl dithiopyrophosphate (Sulfotep)	25	50	30-100	15-125

SURROGATE COMPOUND	PRECISION (RPD)		ACCURACY (%R)	
	Water	Soil	Water	Soil
Tetrapropylphosphate	N/A	N/A	25-125	20-150

TABLE 3-5
PRECISION AND ACCURACY CRITERIA
APPENDIX IX ORGANOCHLORINE HERBICIDES BY METHOD 8150B

PARAMETER	PRECISION (RPD)		ACCURACY (%R)	
	Water	Soil	Water	Soil
2,4-D	15	15	50-125	50-125
2,4,5-TP (Silvex)	15	15	50-125	50-125
2,4,5-T	15	15	50-125	50-125

SURROGATE COMPOUND	PRECISION (RPD)		ACCURACY (%R)	
	Water	Soil	Water	Soil
2, 4 - DCAA	N/A	N/A	16-124	28-104

TABLE 3-6
PRECISION AND ACCURACY CRITERIA
APPENDIX IX METALS AND INORGANICS

PARAMETER	METHOD	PRECISION (RPD)		ACCURACY (%R)	
		Water	Soil	Water	Soil
Antimony	7041	20	20	75-125	75-125
Arsenic	7060	20	20	75-125	75-125
Barium	6010A	20	20	75-125	75-125
Beryllium	6010A	20	20	75-125	75-125
Cadmium	6010A	20	20	75-125	75-125
Chromium	6010A	20	20	75-125	75-125
Cobalt	6010A	20	20	75-125	75-125
Copper	6010A	20	20	75-125	75-125
Lead	7421	20	20	75-125	75-125
Mercury	7471A	20	20	75-125	75-125
Nickel	6010A	20	20	75-125	75-125
Selenium	7740	20	20	75-125	75-125
Silver	7761	20	20	75-125	75-125
Thallium	7841	20	20	75-125	75-125
TIn	6010A	20	20	75-125	75-125
Vanadium	6010A	20	20	75-125	75-125
Zinc	6010A	20	20	75-125	75-125
Cyanide	9010A	20	20	75-125	75-125
Chloride	300.0	NA	20	NA	75-125
Sulfide	376.1	20	20	75-125	75-125

TABLE 3-7
PRECISION AND ACCURACY CRITERIA
APPENDIX IX DIOXINS BY METHOD 8280

PARAMETER	PRECISION (RPD)		ACCURACY (%R)	
	Water	Soil	Water	Soil
2, 3, 7, 8 - TCDD	50	50	60-140	60-140
1, 2, 3, 7, 8 - PECDD	---	---	60-140	60-140
1, 2, 3, 4, 7, 8 - HXCDD	---	---	60-140	60-140
1, 2, 3, 4, 6, 7, 8 - OCDD	---	---	60-140	60-140
2, 3, 7, 8 - TCDF	---	---	60-140	60-140
1, 2, 3, 7, 8 - PECDF	---	---	60-140	60-140
1, 2, 3, 4, 7, 8 - HXCDF	---	---	60-140	60-140
1, 2, 3, 4, 6, 7, 8, 9 - OCDF	---	---	60-140	60-140
13c12 - 2, 3, 7, 8 TCDD	---	---	60-140	60-140
13c12 - 1, 2, 3, 6, 7, 8 - HXCDD	---	---	60-140	60-140
13c12 - OCDD	---	---	60-140	60-140
13c12 - 2, 3, 7, 8 - TCDF	---	---	60-140	60-140
13c12 - 1, 2, 3, 4, 6, 7, 8 - HPCDF	---	---	60-140	60-140

SURROGATE COMPOUND	PRECISION (RPD)		ACCURACY (%R)	
	Water	Soil	Water	Soil
13c12 - 2, 3, 7, 8 TCDD	N/A	N/A	40-120	40-120
13c12 - 1, 2, 3, 6, 7, 8 - HXCDD	N/A	N/A	40-120	40-120
13c12 - OCDD	N/A	N/A	40-120	40-120
13c12 - 2, 3, 7, 8 - TCDF	N/A	N/A	40-120	40-120
13c12 - 1, 2, 3, 4, 6, 7, 8 - HPCDF	N/A	N/A	40-120	40-120

SECTION 4

SAMPLING PROCEDURES

The sampling procedures to be used in the Phase I RFI at CWM Vickery will be consistent with the purpose of this project. The field sampling plan (FSP) outlines all the sampling procedure information. The FSP is located in Section 5 of the Phase I RFI Work Plan.

The sample containers will be provided by GP Environmental Services, who will prepare them in accordance with current U.S. EPA guidance (i.e., "Specification and Guidance for Contaminant Free Sample Containers", April 1992).

Please refer to Section 5 of the Phase I RFI Work Plan for the following information:

- Sample Containers - Section 5.2.3.3
- Obtaining Contaminant-Free Sample Containers - Section 5.2.3.3
- QC Sample Procedures - Section 5.2.5
- Field Blank Collection - Section 5.2.6.1
- Field Duplicative Collection - Section 5.2.6.1.1
- Matrix Spike/Matrix Spike Duplicate Collection - Section 5.2.6.1.2
- Trip Blank Preparation - Section 5.2.6.1.3
- Sampling Equipment Decontamination - Section 5.5
- Subsurface Soil Sampling Collection Procedures - Section 5.7
- Surface Soil Sampling Collection Procedures - Section 5.7
- Sediment Sampling Collection Procedures - Section 5.7
- Soil Sampling Order - Section 5.7
- Sediment Sampling Order - Section 5.7
- Test Pit Sampling Procedures - Section 5.7

SECTION 5

CUSTODY PROCEDURES

It is U.S. EPA and Region V policy to follow the U.S. EPA Region V custody, or chain of custody protocols as described in "NEIC Policies and Procedures", EPA-330/9-78DDI-R, Revised June 1985. This custody is in three parts: Sample collection, Laboratory analysis, and Final evidence files. Final evidence files, including all originals of laboratory reports and purge files, are maintained under document control in a secure area.

A sample or evidence file is under your custody if they:

- are in your possession;
- are in your view, after being in your possession;
- are in your possession and you place them in a secure location; and,
- are in a designated secure area.

5.1 Field Custody Procedures

Field logbooks will provide the means of recording the activities performed during data collection. As such, entries will be described in as much detail as possible so that persons going to the facility could reconstruct a particular situation without reliance on memory.

Field logbooks will be bound, field survey books or notebooks. Logbooks will be assigned to field personnel, but will be stored in the document control center when not in use. Each logbook will be identified by the project-specific document number.

The title page of each logbook will contain the following:

- Person to whom the logbook is assigned;
- Logbook number;
- Project name;
- Project start date; and
- End date.

Entries into the logbook will contain a variety of information. At the beginning of each entry, the date, start time, weather, names of all sampling team members present, level of personal protection being used, and the signature of the person making the entry will be entered. The names of visitors to the site, field sampling or investigation team personnel and the purpose of their visit will also be recorded in the field logbook.

Measurements made and samples collected will be recorded. All entries will be made in ink, signed, and dated and no erasures will be made. If an incorrect entry is made, the information will be crossed out with a single strike mark which is signed and dated by the sampler. Whenever a sample is collected, or a measurement is made, a detailed description of the location of the station, which includes compass and distance measurements, shall be recorded. The number of the photographs taken of the station, if any, will also be noted. All equipment used to make measurements will be identified, along with the date of calibration.

Samples will be collected following the sampling procedures documented in Section 5.0 of the Phase I RFI Work Plan. The equipment used to collect samples will be noted, along with the time of sampling, sample description, depth at which the sample was collected, volume and number of containers. Sample identification number will be assigned prior to sample collection. Field duplicate samples, which will receive an entirely separate sample identification number, will be noted under sample description.

The sample packaging and shipment procedures summarized below will ensure that the samples will arrive at the laboratory with the chain of custody intact.

a) The field sampler is personally responsible for the care and custody of the samples until they are transferred or properly dispatched. As FEW people as possible should handle the samples.

b) All bottles will be identified by use of sample tags or labels with sample numbers, sampling locations, date/time of collection, and type of analysis. The sample numbering system is presented in Section 6.0 of the Phase I RFI Work Plan.

c) Sample tags or labels are to be completed for each sample using waterproof ink unless prohibited by weather conditions. For example, a logbook notation would

explain that a pencil was used to fill out the sample tag because the ballpoint pen would not function in freezing weather.

d) Samples are accompanied by a properly completed chain of custody form. The sample numbers and locations will be listed on the chain of custody form. When transferring the possession of samples, the individuals relinquishing and receiving will sign, date, and note the time on the record. This record documents transfer of custody of samples from the sampler to another person, to a mobile laboratory, to the permanent laboratory, or to/from a secure storage area. An example chain of custody form is shown in Figure 5-1 of the Phase I RFI Work Plan.

e) Samples will be properly packaged on ice at 4°C for shipment and dispatched to the laboratories specified in Section 2.4 of this QAPjP as appropriate for the analyses specified in Section 2.4 of this QAPjP, with a separate signed custody record enclosed in and secured to the inside top of each sample box or cooler. Shipping containers will be locked and secured with strapping tape and custody seals for shipment to the laboratory. The custody seals will be signed by the field team leader or his designee before attaching to the front right and back left of the cooler. The custody seals are covered with clear plastic tape. The cooler is strapped shut with strapping tape in at least two locations.

f) Whenever samples are collected to be split with a government agency, a separate sample receipt is prepared for those samples and marked to indicate with whom the samples are being collected. The person relinquishing the samples to the facility or agency should request the representatives signature acknowledging sample receipt. If the representative is unavailable or refuses to sign, this is noted in the "Received By" space.

g) All shipments will be accompanied by the Chain of Custody Record identifying the contents. The original record will accompany the shipment, and the pink and yellow copies will be retained by the sampler for returning to the sampling office.

h) If the samples are sent by common carrier, a bill of lading should be used. Receipts of bills of lading will be retained as part of the permanent documentation. If sent

by mail, the package will be registered with return receipt requested. Commercial carriers are not required to sign off on the custody form as long as the custody forms are sealed inside the sample cooler and the custody seals remain intact.

i) Samples will generally be transported to the laboratory by overnight courier but no later than 72 hours from time of sample collection.

5.2 Laboratory Custody Procedures

Laboratory custody procedures for sample receiving and log-in; sample storage and numbering; tracking during sample preparation and analysis; and storage of data are described in Section 7 of the GP Environmental Services Quality Assurance Plan which has been excerpted and attached to this QAPjP as Appendix B.

5.3 Final Evidence Files

Custody of final evidence files will be maintained by the Rust Project Manager for a period of 10 years. The files which will include original filed forms/notes, field log books, and original laboratory reports, will be kept in a secured, limited access area and under custody of the Rust Project Manager. The files will be offered to U.S. EPA prior to disposal.

SECTION 6

CALIBRATION PROCEDURES AND FREQUENCY

This section describes the calibration procedures and the frequency at which these procedures will be performed for both field and laboratory instruments.

6.1 Field Instrument Calibration

The field instrument HNu Model PI 101 will be calibrated daily prior to use and will be recalibrated every 25 samples. In addition, the PID will be calibrated if the probe assembly is removed from the readout assembly, if the ion chamber is cleaned, if the UV light is changed, or if the PID appears to be working erratically.

All calibration procedures will be documented in the field log book. Each entry shall include the following information:

- Date;
- Time;
- Weather Conditions;
- Calibrating Personnel;
- Condition of Battery;
- Type of Calibration Gas;
- Concentration of Calibration Gas;
- Gas Cylinder Pressure;
- Span Setting; and
- Pertinent Comments.

The Photoionization detector (PID) is calibrated in the following manner:

1) Attach the probe extension to the probe. The probe extension must be used during the calibration procedure.

2) Attach the probe to the readout assembly. Align the 12 pin interface tabs before locking the probe to readout assembly with the threaded coupling.

3) Turn the function switch to the battery position. The needle should be in the green region on the readout. If it is not, recharge the battery. Make note of the battery's condition in the PID Calibration Log.

4) Turn the function switch to the standby position. If necessary, set the zero point with the zero potentiometer.

5) Attach the regulator to the isobutylene cylinder (calibration gas). Make note of the isobutylene concentration and the cylinder pressure in the PID Calibration Log. Do not use cylinders with pressures less than 30 pounds per square inch (psi). Low cylinder pressure can effect the calibration results.

6) Attach the probe extension to the regulator with a ¼ inch diameter tubing as described in PID Manufacturer's manual. The probe extension and the ¼ inch diameter tubing should be clean. Dirty extensions and ¼ inch diameter tubing can effect the calibration results.

7) Turn the function switch to the 0-200 ppm range.

8) Initiate gas flow by fully opening the valve on the regulator. The regulator sets and controls the flow rate of the gas at a value preset at the factory. Allow the gas to flow until a steady reading is obtained.

9) If the reading is the same as concentration indicated on the span gas bottle, then no adjustment is necessary. If the reading has changed from the concentration indicated on the span gas bottle, unlock and adjust the span control knob until the desired reading is obtained. Lock the span control knob and make note of the span setting in the PID Calibration Log.

6.2 Laboratory Instrument Calibration

GP Environmental Services calibration procedures and requirements are found in their Standard Operating Procedures (SOPs) which are included in Appendix A.

The laboratory maintains a sample logbook for each instrument which will contain the following information: instrument identification, serial number, date of calibration, analyst, calibration solutions run and the samples associated with these calibrations.

SECTION 7

ANALYTICAL PROCEDURES

The samples collected during the Phase I RFI field operations at CWM Vickery will be analyzed by GP Environmental Services, 202 Perry Parkway, Gaithersburg, Maryland 20877, 301-926-6802 (chemical analysis for all organic and inorganic parameters except dioxin); Pace, Inc., 284 Raritan Center Parkway, Edison, New Jersey 08818, 908-225-6792 (chemical analysis of dioxin); and Rust E&I, 12 Metro Park Road, Albany, New York 12205, 518-458-1313 (geotechnical analyses).

7.1 Field Measurements

Field measurements will be limited to qualitative screening of VOCs using an HNu. Two types of screening will be performed -- for general information purposes and for selection of samples for laboratory analysis. Where the purpose is to obtain general information on the subsurface materials (i.e., comparable to noting the color and texture of the soil), the HNu probe tip will be drawn along the edge of the soil core as the sampling device is opened. The rate of movement will balance the need to obtain and observe a valid instrument response with the need to take measurements before excessive loss of VOCs occurs. Where the purpose is to select samples for laboratory analysis, the head-space screening procedure described in the FSP (Section 5 of the Phase I RFI Work Plan) will be followed. This procedure involves immediate collection of possible samples in containers appropriate for laboratory analysis, with a portion of sample material placed in a plastic bag for head-space screening after a specified time allowance for volitization.

7.2 Laboratory Analytical Procedures

GP Environmental Services will analyze the samples collected in the field for Appendix IX volatile organics, semivolatile organics, pesticides (organochlorine and organophosphate), PCBs, herbicides, metals, cyanide, sulfide, and chloride as detailed in Table 1-1 using the analytical and preparatory methods listed in Table 7-1. The parameters comprising these analytical suites and the reporting limits that will be used by GP Environmental Services are shown in Tables 1-2 through 1-7. Pace, Inc. will analyze the samples collected in the field for dioxin using the

analytical and preparatory methods listed in Table 7-1. The parameters comprising this analytical suite and the reporting limits that will be used Pace, Inc. are shown in Table 1-8. Table 7-1 shows the laboratories' Standard Operating Procedure (SOP) numbers, the titles of the methods, and the SW-846 (3rd Edition) methods on which SOPs are based. The SOPs are included in the Phase I QAPjP as Appendix A.

7.3 Geotechnical Analytical Procedures

The Rust geotechnical laboratory will analyze the samples collected in the field for cation exchange capacity, Atterberg Limits, moisture content, grain-size distribution (sieve and hydrometer), and total organic carbon using the methods listed in Table 7-2.

TABLE 7-1
ANALYTICAL & PREPARATORY METHODS

GP Environmental Services SOP's No.	Title	3rd Edition SW 846 Method No.
13.1	Volatile Organics	8240B
12.17	Soil Extraction for Semivolatile Organics (Sonication Extraction)	3550
13.34	GC/MS Analysis of The Target Compound List and Appendix IX Semivolatile Organics	8270B
12.15	Continuous Liquid-Liquid Extraction for Pesticides/PCB's	3520B
12.16	Soil Extraction for Pesticides/PCB's Compounds (Sonication Extraction)	3550A
13.0	Organochlorine Pesticides and PCB's	8080A
13.36	Organophosphorus Pesticides	8141A
13.35	Analysis of Herbicides	8150B
11.36	Acid Digestion of Surface and Ground Water Samples for Flame/ICP Analyses and Furnace Analysis of Antimony in Accordance with SW 846	3005A
11.37	Acid Digestion of Surface and Ground Water Samples for Furnace Analysis in Accordance with SW 846	3020A
11.35	Acid Digestion of Soil, Sludge, Sediment, and Other Solid Waste Samples for Flame/ICP and Furnace Analyses in Accordance with SW 846	3050A
11.38	ICP Operation, Calibration and Quntitation of HSL Metals	6010A
11.41	Graphite Furnace Analysis for Arsenic	7060
11.40	Graphite Furnace Analysis for Antimony	7041
11.42	Graphite Furnace Analysis for Lead	7421
11.45	Graphite Furnace Analysis for Selenium	7740
11.43	Graphite Furnace Analysis for Silver	7761
11.44	Graphite Furnace Analysis for Thallium	7841
11.39	Cold Vapor Analysis for Mercury in Accordance with SW 846	7470A & 7471A
11.46	Method for Total Cyanide Analysis In Water and Soil	9010A
11.47	Analysis for Water and Soils for Sulfide According to MCAWW Method 376.1 (titrimetric)	
	Fecal Coliform Membrane Filter Procedure, Standard Method No. 9222D	
ETC Doc. No. EX411901	Extraction and Cleanup of Environmental Samples for the Analysis of Polychlorinated Dibenzo-P-Dioxins and Dibenzofurans by SW 846 for N-J DEPE X-26174	
ETC Doc. No. EX420301	The Analysis of Environmental Sample Extract for Polychlorinated Dibenzo-P-Dioxins and Dibenzofurans Using Gas Chromatography/Mass Spectrometry by SW 846	8280

TABLE 7-2
GEOTECHNICAL METHODS

ASTM METHOD NO.	TITLE
D4318	Atterberg Limits
D2216	Soil Moisture
D422	Particle Size Analysis
D4927	Soil pH
D2974	TOC
EPA 9080	Cation Exchange Capacity

SECTION 8

INTERNAL QUALITY CONTROL CHECKS

8.1 Field QC Checks

QC checks to assess field sampling precision and bias will be made by collecting field duplicates and field blanks (aqueous samples only) for laboratory analysis. Collection of these samples will be in accordance with the procedures described in the FSP at the frequency specified in Section 3 of this Phase I QAPjP.

8.2 Laboratory Quality Control Checks

The GP Environmental Services laboratory uses an internal QC program to ensure the reliability and validity of the analysis performed at the laboratory. Each SOP includes a QC section which addresses the minimum QC requirements for the procedure. The internal quality control checks might differ slightly for each individual procedure, but, in general, the QC requirements include the following:

- Field and Trip blanks (aqueous samples only);
- Method blanks;
- Reagent/preparation blanks (applicable to inorganic analysis);
- Instrument blanks;
- Surrogate spikes;
- Analytical spikes (Graphite furnace);
- Field duplicates;
- Laboratory duplicates;
- Laboratory control standards;
- Internal standard areas for GC/MS analysis; control limits;
- Mass tuning for GC/MS analysis;
- Endrin/DDT degradation checks for GC/EC analysis; and,
- Second, dissimilar column confirmation for GC/EC analysis.

For a description of the specific QC requirements applicable to the analyses included in the Phase I RFI at CWM Vickery, refer to the laboratory's SOPs, which are included in Appendix A. These requirements are also summarized in Table 8-1.

All data obtained will be properly recorded. The data package will include a full deliverable package capable of allowing the recipient to reconstruct QC information and compare it to QC criteria. Any samples analyzed which are in nonconformance with the QC criteria will be reanalyzed by the laboratory, if sufficient volume is available and if sample holding times are not exceeded. The need for reanalysis will be brought to the attention of the Rust Project Manager, who, in consultation with the CWM Vickery Project Manager, the Rust Project Supervisor, and/or the Rust QA Officer, may choose to perform reanalysis beyond holding times with the understanding that the results will be qualified. It is expected that sufficient volumes/weights of samples will be collected to allow for reanalysis when necessary.

TABLE 8-1
G.P. ENVIRONMENTAL SERVICES
CONTROL LIMITS AND CORRECTIVE ACTIONS

Analytical Method	Parameter	Quality Control Check	Frequency	Acceptance Criteria	Corrective Action
8240B	Volatile Organics	Trip blank	One per cooler	Less than 4 cmpds. all with conc. less than 3 times the EQL.	Examine analytical results, if there is not a problem and compound is present in samples then resample.
		Field blank	1 per 10 samples or daily; whichever is more frequent	Less than 4 cmpds. all with conc. less than 3 times the EQL.	Examine analytical results, if there is not a problem and compound is present in samples then resample.
		Field duplicate	1 per 10 samples	Water - < 30% RPD Soils - < 40% RPD	Examine analytical results. If no problems then examine sampling procedures.
		Storage blank	1 per set of samples	Less than 4 cmpds. with conc. less than 3 times EQL.	Examine analytical results, if there is not a problem and compound is present in samples then resample.
		Method blank	1 per 12 per period	All compounds less than EQL.	Reanalyze blanks, if contaminants are still present then clean and recalibrate the instrument.
		Surrogate spikes	All analyses	See Table 3 for spiking compound, concentrations and control limits.	Reanalyze sample, and if recoveries are again outside of the limits then report both analyses and bias the data.
		MS/MSD analyses	1 pair for every 20 samples or less	See Table 3 for compounds, recovery limits and RPD.	Recalibrate and reanalyze.
		LCS	1 per 20 samples or less	Does not violate any item listed below in Note 1.	Determine reason for loss of control and reanalyze.
8270B	Semivolatile Organics	Field blank	1 per 10 samples or daily; whichever is more frequent	Less than 4 cmpds. all with conc. less than 3 times the EQL.	Examine analytical results, if there is not a problem and compound is present in samples then resample.
		Field duplicate	1 per 10 samples	Water - < 30% RPD Soils - < 40% RPD	Examine analytical results. If no problems then examine sampling procedures.
		Method blank	Per daily extraction-batch or 1 per 20 samples, whichever is more frequent	All cmpds. less than the EQL except phthalates which are less than 5 times the EQL.	Reanalyze and re-examine analytical results. If still present, re-extract and reanalyze all associated samples. Document al actions.
		Surrogate spikes	All analyses	See Table 3 for spiking compound, concentrations and control limits.	Reanalyze sample, and if recoveries are again outside of the limits then report both analyses and bias the data.
		MS/MSD analyses	1 pair for every 20 samples or less	See Table 3 for compounds, recovery limits and RPD.	Recalibrate and reanalyze.
		LCS	1 per 20 samples or less	Does not violate any item listed below in Note 1.	Determine reason for loss of control and reanalyze.
8080A	Pesticides / PCBs	Field blank	1 per 10 samples or daily; whichever is more frequent	Less than 4 cmpds. all with conc. less than 3 times the EQL.	Examine analytical results, if there is not a problem and compound is present in samples then resample.
		Field duplicate	1 per 10 samples	Water - < 30% RPD Soils - < 40% RPD	Examine analytical results. If no problems then examine sampling procedures.
		Method blank	Per daily extraction-batch or 1 per 20 samples, whichever is more frequent	All cmpds. less than the EQL.	Reanalyze. If still present clean instrument and recalibrate.
		Surrogate spikes	All analyses	See Table 3 for spiking compound, concentrations and control limits.	Reanalyze samples. If outside of criteria, then report both results and bias the data.

TABLE 8-1 (cont.)
G.P. ENVIRONMENTAL SERVICES
CONTROL LIMITS AND CORRECTIVE ACTIONS

Analytical Method	Parameter	Quality Control Check	Frequency	Acceptance Criteria	Corrective Action
8080A (Cont.)	Pesticides / PCBs (cont.)	MS/MSD analyses	1 per 20 samples or less	See Table 3 for compounds, recovery limits and RPD.	Reanalyze and if recoveries are still outside of criteria, report both results.
		LCS	1 per 20 samples or less	Does not violate any item listed below in Note 1.	Determine reason for loss of control and reanalyze.
EPA 8150B	Herbicides	Field blank	1 per 10 samples or daily; whichever is more frequent	All cmpds. less than the EQL.	Examine analytical results, if there is not a problem and compound is present in samples then resample.
		Field duplicate	1 per 10 samples	Water - < 30% RPD Soils - < 40% RPD	Examine analytical results. If no problems then examine sampling procedures.
		Method blank	Per daily extraction-batch or 1 per 20 samples, whichever is more frequent	All cmpds. less than the EQL.	Reanalyze blanks. If containments are still present, then clean and recalibrate instrument.
		Surrogate spikes	All analyses	See Table 3 for spiking compound, concentrations and control limits.	Reanalyze sample, and if recoveries are again outside of the limits then report both analyses and bias the data.
		MS/MSD analyses	1 per 20 samples or less	See Table 3 for compounds, recovery limits and RPD.	Reanalyze and if recoveries are still outside of criteria, report both results.
		LCS	1 per 20 samples or less	Does not violate any item listed below in Note 1.	Determine reason for loss of control and reanalyze.
6010 & 700 Series	Metals	Field blank	1 per 10 samples or daily; whichever is more frequent	All cmpds. less than the EQL.	Examine analytical results, if there is not a problem and compound is present in samples then resample.
		Field duplicate	1 per set of 10 samples	Water - < 30% RPD Soils - < 40% RPD	Examine analytical results. If no problems then examine sampling procedures.
		Method blank	Daily or one per digestion batch, whichever is more frequent	All cmpds. less than the EQL.	Reanalyze. If problem still exists then redigest and reanalyze all associated samples.
		Lab duplicate	1 per digestion batch	If less than 5x CRDL, then +/-CRDL for water and +/-2x for CRDL for soils.	Reanalyze and re-examine analyses.
		Matrix Spike	1 per 10 samples or 1 per digestion batch	See Table 3.	Reanalyze and confirm results. Report analyses.
		LCS	1 per set of 10 samples	Recovery between 80-110%.	Reanalyze, if problem still exists then redigest and reanalyze associated samples.
9010A & 9030	Cyanide & sulfide	Field blank	Daily	All cmpds. less than the EQL.	Reanalyze and examine field sampling procedures if necessary.
		Field duplicate	1 per 10 samples	Water - < 20% Soils - < 30%	Examine analytical results. If no problems then examine sampling procedures.
		Method blank	Once per extraction procedure	All cmpds. less than the EQL.	Reanalyze and re-distill all associated samples if necessary.
		Lab duplicate	1 per 10 samples	Water - < 20% Soils - < 30%	Examine analytical data and reanalyze if necessary.

TABLE 8-1 (cont.)
G.P. ENVIRONMENTAL SERVICES
CONTROL LIMITS AND CORRECTIVE ACTIONS

Analytical Method	Parameter	Quality Control Check	Frequency	Acceptance Criteria	Corrective Action
9010A & 9030 (Cont.)	Cyanide & sulfide (Cont.)	Matrix Spike	1 per 10 samples or 1 per digestion batch	See Table 3.	Reanalyze and confirm results. Report analyses.
		LCS	1 per set of 10 samples	Recovery between 80-110%.	Reanalyze, if problem still exists then redigest and reanalyze associated samples.

*Note 1

The laboratory QC logbooks are for the recording of QC data (LCS results) by the analyst immediately after it is acquired. The data points are also immediately plotted by the analyst on Quality Control Charts in the QC logbooks. Control charts may also be generated automatically by the laboratory data management system. This allows the analyst to immediately ascertain the validity of the QC data and to take action, if required, in the event of an out of control situation. An analysis may be considered out of control whenever, at a minimum, any one of the following conditions is demonstrated by a control chart used to monitor that analysis:

- Any one point is outside of the control limits
- Any three consecutive points are outside the warning limits
- Any eight consecutive points are on the same side of the plotted mean
- Any six consecutive points are such that each point is larger (or smaller) than its immediate predecessor
- Any obvious cyclic pattern is seen in the data points

Quality Control Charts are periodically updated based on historical data. It is G.P. Environmental Services' policy to update Control Charts after every twenty new sample data points are accumulated. The recalculation of mean and standard deviation values are based upon the forty most recent data points.

Warning and control limits are based upon the following formulas:

Upper Control Limit (UCL) $= \chi + 3\sigma$
Upper Warning Limit (UWL) $= \chi + 2\sigma$
Lower Warning Limit (LWL) $= \chi - 2\sigma$
Lower Control Limit (LCL) $= \chi - 3\sigma$

where:
χ= mean percent recovery
σ= Standard deviation

SECTION 9

DATA REDUCTION, VALIDATION, AND REPORTING

All data generated through field activities or by the laboratory operation shall be reduced and validated prior to reporting. No data shall be disseminated by the laboratory until it has been subjected to the procedures summarized below.

9.1 Data Reduction

9.1.1 Field Data Reduction Procedures

Field data pertaining to the Phase I RFI will only be from direct read instrumentation for qualitative screening of VOCs by photoionization detector, and all data will be recorded into the field logbook immediately after the measurements are taken. Therefore, field data reduction will be minimal. If errors are made, results will be legibly crossed out, initialed and dated by the field member, and corrected in a space adjacent to the original (erroneous) entry. Later, when these readings are tabulated or transferred to boring logs for inclusion in the Phase I RFI report, the Field Team Leader (who is identified in Section 2 of this Phase I QAPjP) will proof the table and logs to determine whether any transcription errors have been made.

9.1.2 Laboratory Data Reduction Procedures

Laboratory data reduction will be performed according to the following protocol. All raw analytical data will be recorded in numerically identified laboratory notebooks. These notebooks will be issued only by the Laboratory Section Supervisor. Data are recorded in this notebook along with other pertinent information, such as the sample identification number and the sample tag number. Other details will also be recorded in the lab notebook, such as the analytical method used (SOP#), name of analyst, the date of analysis, matrix sampled, reagent concentrations, instrument settings, and the raw data. Each page of the notebook shall be signed and dated by the analyst. Copies of any strip chart printouts (such as gas chromatograms) will be maintained on file. Periodic review of these notebooks by the Lab QA Manager takes place prior to final data reporting. (Records of notebook entry inspections are maintained by the Lab Section Supervisor.)

For this project, the equations that will be employed in reducing data are those specified in the laboratory's SOPs which are included in this Phase I QAPjP in Appendix A. Such formulae make pertinent allowances for matrix type. All calculations are checked by the Section supervisor at the conclusion of each operating day. Errors are noted, corrections are made, but the original notations are crossed out legibly. Analytical results for soil samples shall be calculated and reported on a dry weight basis.

Quality control data (e.g. laboratory duplicates, surrogates, matrix spikes, and matrix spike duplicates) will be compared to the method acceptance criteria. Data considered to be acceptable will be entered into the laboratory computer system. Data summaries will be sent to the Laboratory Operations Manager for review. If approved, data are logged into the project database format. Unacceptable data shall be appropriately qualified in the project report. Case narratives will be prepared which will include information concerning data that fell outside acceptance limits, and any other anomalous conditions encountered during sample analysis. After the Lab Operations Manager approves these data, they are considered ready for third party data validation.

9.2 Data Validation

9.2.1 Procedures to Evaluate Field Data

Procedures to evaluate field data for this project primarily include checking the calibration records for the HNu. This task will be the responsibility of the Rust QA Officer, who will otherwise not participate in making any of the field measurements, or in adding notes, data or other information to the log book.

9.2.2 Procedures to Validate Laboratory Data

Procedure to validate laboratory data will be similar to the U.S. EPA Contract Laboratory Program's "National Functional Guidelines for Organic Data Review" (EPA 540/R-94/012, February 1994) and "National Functional Guidelines For Inorganic Data Review" (EPA 540/R-94/013, February 1994). One hundred percent of organic and inorganic data will be validated by The Rust Data Validator who is identified in Section 2 of this Phase I QAPjP.

The overall completeness of the data package will be evaluated by the Rust Data Validator. Completeness checks will be administered on all data to determine whether deliverables specified in the Phase I RFI Work Plan and Phase I QAPjP are present. At a minimum, deliverables will include sample chain-of-custody forms, analytical results, QC summaries, and supporting raw data from instrument printouts. The reviewer will determine whether all required items are present and request copies of missing deliverables.

9.3 Data Reporting

9.3.1 Field Data Reporting

Field data will be reported using summary tabulations of the HNu readings and as information included on boring logs.

9.3.2 Laboratory Data Reporting

Laboratory data reporting has two components: reporting from the laboratory to Rust, and reporting from Rust/CWM Vickery to U.S. EPA. Prior to submitting its laboratory report to Rust, GP Environmental's Operations Manager will perform a final review of the report summaries and case narratives to determine whether the report meets project requirements. In addition to the record of chain-of-custody, the report format shall consist of the following:

1. Case Narrative:

    i. Date of issuance
    ii. Laboratory analysis performed
    iii. Any deviations from intended analytical strategy
    iv. Laboratory batch number
    v. Numbers of samples and respective matrices
    vi. Project name and number
    vii. Discussion of whether or not sample holding times were met
    viii. Discussion of technical problems or other observations which may have created analytical difficulties
    ix. Discussion of any laboratory quality control checks which failed to meet project criteria
    x. Signature of the Laboratory Operations Manager

2. Chemistry Data Package

   i. Case narrative for each analyzed batch of samples
   ii. Summary page indicating dates of analyses for samples and laboratory quality control checks
   iii. Cross referencing of laboratory sample to project sample identification numbers
   iv. Data qualifiers to be used should be adequately described
   v. Sample preparation and analyses for samples
   vi. Sample results
   vii. Raw data for sample results and laboratory quality control samples
   viii. Results of (dated) initial and continuing calibration checks, and GC/MS tuning results
   ix. Matrix spike and matrix spike duplicate recoveries, laboratory control samples, method blank results, calibration check compounds, and system performance check compound results
   x. Labeled (and dated) chromatograms/spectra of sample results and laboratory quality control checks
   xi. Results of tentatively identified compounds

The data package submitted will be a "CLP-like" data package consisting of all the information presented in a CLP data package (but without the CLP forms).

Upon receipt of the laboratory's report, the Rust Data Validator will validate the data as described above. The Rust Data Validator will involve other project personnel (i.e., the Rust QA Officer, the Rust Project Manager, the Rust Project Supervisor, the CWM Vickery Project Manager, and/or appropriate staff at the laboratory) in the validation process as necessary to clarify and resolve validation issues, and prepare a validation report. Upon completion of this process, Rust/CWM Vickery will submit the laboratory's data report and the Rust data validation report to U.S. EPA.

SECTION 10

PERFORMANCE AND SYSTEM AUDITS

Performance and system audits of both field and laboratory activities will be conducted to verify that sampling and analysis are performed in accordance with the procedures established in the FSP and QAPjP. The audits of field and laboratory activities include two independent parts: internal and external audits.

10.1 Field Performance and System Audits

10.1.1 Internal Field Audits

The internal audits of field activities including sampling and field measurements will conducted by the Rust QA Officer. These audits will verify that all established procedures are being followed. The initial field audit will be conducted during the first week of field operations. If a substantial number of corrective action issues are identified during this initial audit, or if the field operations extend beyond 12 weeks, follow-up audits will be scheduled and performed to ensure that deficiencies are corrected and to verify that QA procedures are maintained throughout the field operations.

The audits will include examination of field sampling records, field measurement records, field instrument operating records, instrumentation calibration records, sample collection, sample handling, sample packaging, sample documentation, maintenance of QA procedures, and chain-of-custody procedures. The results of these audits will be reported in the next monthly QA report to management as described in Section 14 of this Phase I QAPjP. If these audits identify nonconformances with the FSP and Phase I QAPjP that affect data quality, the emergency Corrective Action procedures described in Section 14 of this Phase I QAPjP (including notification of the U.S. EPA RCRA Project Coordinator) will be implemented.

10.1.2 External Field Audits

External field audits may be conducted by the U.S. EPA RCRA Project Coordinator or his designee. External field audits may be conducted at any time during the field operations. These

audits may or may not be announced and are at the discretion of the U.S. EPA. External field audits will be conducted according to the field activity information presented in the Phase I QAPjP.

10.2 Laboratory Performance and Systems Audits

10.2.1 Internal Laboratory Audits

The internal laboratory audit will be conducted by the Rust QA Officer or his designee. An initial laboratory audit will be conducted during the first month following approval of this QAPjP by U.S. EPA. Subsequent system audits will be performed on an annual basis and subsequent performance audits will be performed on a quarterly basis as necessary based on the duration of the Phase I RFI.

The internal lab system audits will include an examination of laboratory documentation on sample receiving, sample log-in, sample storage, chain-of- custody procedures, sample preparation and analysis, instrument operating records, etc. The performance audits will involve preparing blind QC samples and submitting them along with project samples to the laboratory for analysis throughout the project. The Rust QA Officer will evaluate the analytical results of these blind performance samples to ensure the laboratory maintains acceptable QC performance.

10.2.2 External Laboratory Audits

An external audit will be conducted by U.S. EPA Region 5 Central Regional Laboratory (CRL). An external audit will be conducted at least once prior to the initiation of the sampling and analysis activities. These audits may or may not be announced and are at the discretion of the U.S. EPA. External laboratory audits will include (but not be limited to) review of laboratory analytical procedures, laboratory on-site audits, and/or submission of performance evaluation samples to the laboratory for analysis.

SECTION 11

PREVENTATIVE MAINTENANCE

11.1 Field Instrument Preventative Maintenance

The field equipment for this project includes HNU meters. Specific preventative maintenance procedures to be followed for field equipment are those recommended by the manufacturer. Field instruments will be checked and calibrated daily before use. Calibration checks will be documented in field notebooks. Critical spare parts such as lamps will be kept on-site to reduce downtime. Backup instruments and equipment will be available on-site or within 1 day shipment to avoid delays in the field schedule.

11.2 Laboratory Instrument Preventative Maintenance

As part of their QA/QC program, a routine preventative maintenance program is conducted by GP Environmental Services to minimize the occurrence of instrument failure and other system malfunctions. Designated laboratory employees shall regularly performe routine scheduled maintenance and repair of all instruments. All maintenance that is performed will be documented in the laboratory's operating record. All laboratory instruments are maintained in accordance with manufacturer's specification.

The schedules for preventive maintenance for laboratory instruments are included in the laboratory SOPs attached as Appendix A, and are summarized in Table 11-1.

TABLE 11-1
G.P. ENVIRONMENTAL SERVICES
PREVENTIVE MAINTENANCE SCHEDULE

INSTRUMENT	ACTIVITY	FREQUENCY
Perkin-Elmer 6000 & 6500 Inductively Coupled Argon Plasma Spectrometers	Change pump tube & sample introduction line	Daily
	Check waste bottle & drain line system	Daily
	Check BEC of the instrument at Mn line	Daily
	Check Na bullet in the plasma source	Daily
	Check gains of each element analyzed	Daily
	Disassemble and clean the plasma torch assembly	Weekly
	-replace the sample and gas introduction tips	Weekly
	-check the condition of torch glassware & replace if needed	Weekly
	-replace the O-ring seals	Weekly
	-check the injector tube for wear or deposits & replace if needed	Weekly
	-reassemble the torch and check out system	Weekly
	Check element files for wavelength offsets	Weekly
	Check disk space in ICP software data area	Weekly
	Check the gas lines and fittings for wear or corrosion	Weekly
	Clean the inlet filter to the spectrometer mainframe	Monthly
	Clean the filters to the 7500 computer	Monthly
	Clean the file system integrity	Monthly
	Check the Rf power supply dynamic currents and voltages	Monthly
Perkin-Elmer 5100 & 3030 Zeeman Atomic Absorption (AA) Spectrophotometers	Check the condition of graphite tube and platform	Daily
	Refill the water supply and empty the drain waste bottle	Daily
	Check and record the gain for each element analyzed	Daily
	Clean the area around the furnace	Weekly
	Clean the silica lenses in the furnace chamber	Weekly
	Make a working copy of the system disk	Monthly
	Clean optics	Annual
	Change contact rings	Annual
Perkin-Elmer 3030B & 460AA Spectrophotometers	Clean burner silt	Daily
	Check the drain waste bottle for appropriate level	Daily
	Clean entrance and exit optics	Weekly
	Wipe acid residue from burner chamber	Weekly

TABLE 11-1 (cont.)
G.P. ENVIRONMENTAL SERVICES
PREVENTIVE MAINTENANCE SCHEDULE

INSTRUMENT	ACTIVITY	FREQUENCY
Perkin-Elmer 3030B & 460AA Spectrophotometers (cont.)	Replace sample capillary tubing to neubilizer chamber	Weekly
	Clean internal optics	Annual
	Reseat electronic boards	Annual
PS 200 Mercury Autoanalyzer	Drying tube - replace desiccant	Daily
	Clean and refill wash basin	Daily
	Perform test optics and record results	Daily
	Lubricate Autosampler Rails	Daily
	Replace pump tubing if needed	Weekly
	Align Autosampler if needed	Monthly
	Perform Instrumental Detection Limit Study	Quarterly
	Replace Liquid - Gas separator	Annual
	Clean Absorption Cell	Annual
Dionex 4000i Ion Chromatograph	Rinse hydroxide system to remove residual carbonates	Daily
	Prepare and degas aluents	Daily
	Check baseline stability, (pt eval)	Daily
	Check for spills in column and valve compartments	Weekly
	Clean dried eluent from surfaces and components	Weekly
	Check micromembrane suppressers for leaks	Weekly
	Check all lines for crimping	Weekly
	Check GPM pump seals and pistons	Monthly
	Replace regen system acid	Quarterly
	Clean conductivity detector and check cell constant	Quarterly
	Regenerate Anion Trap Column	Annual
	Disassemble and clean GPM check valve	Annual
	Disassemble and clean ACM liquid valves and check piston o-rings	Annual
	Clean guard and separator columns	Annual
	Clean dust from GPM cooling fan and boards	As Needed
	Change gas cylinder (helium)	As Needed
	Replace guard column	As Needed
	Replace Separator column	As Needed

TABLE 11-1 (cont.)
G.P. ENVIRONMENTAL SERVICES
PREVENTIVE MAINTENANCE SCHEDULE

INSTRUMENT	ACTIVITY	FREQUENCY
Dionex 4000i Ion Chromatograph (cont.)	Replace ATC	As Needed
	Replace micromembrane suppresser	As Needed
	Replace auto-regen cartridge	As Needed
	Replace gas & liquid lines	As Needed
Analytical Balance	Clean the sample holder	Each Use
	Adjust the zero setting	Each Use
	Check the calibration of the scale through full range	Biweekly
Perkin-Elmer 8410 & HP 5890(s) Gas Chromatographs	Change septa	Daily
	Save the data files from previous day's run	Daily
	Check the carrier gas pressure and replace it if below 250 psi	Daily
	Check the gas indicator traps for water and replace if needed	Daily
	Back up the computer system software	Monthly
	Remove column and check for deposits	Monthly
	Replace glass wool and ferrules	Monthly
	Reinstall and check flow rate	Monthly
	Bake out electron capture detectors at 400 C for 4 hours	Monthly
	Check and clean the syringe and dip needle	Monthly
	Replace the gas line purifying devices	Quarterly
	Replace the printer ribbon	Quarterly
HP 5970B GC/MS Selective Detector	Check oil level in mechanical pump	Weekly
	Run Autotune	Weekly
	Back up data and tape unit	Weekly
	Check the condition of the carrier gas trap at each cylinder change	Weekly
	Inspect and refill the cal gas vial with PFTBA (Perfluorotributylamine)	Quarterly
	Change the oil in the mechanical pump	Semiannual
	Change the oil in the turbomolecular pump	Semiannual
	Vacuum the dust from the grills of the two cooling fans as needed	Annual
	Filament replacement	Annual

TABLE 11-1 (cont.)
G.P. ENVIRONMENTAL SERVICES
PREVENTIVE MAINTENANCE SCHEDULE

INSTRUMENT	ACTIVITY	FREQUENCY
HP 5970B GC/MS Selective Detector (cont.)	Source cleaning - repeller face, drawout lens face, quadrupoles, lens stack electron focus, ion source chamber, and any other metal parts that appear dirty	Annual
	Replace electron multiplier	Annual
	Replace GC column (capillary/packed)	Annual
Rapid Flow AutoAnalyzer	Empty the sample cups	Each Use
	Check the fitting connections	Each Use
	Perform flow test	Each Use
	Make up new reagents and standards	Each Use
	Flush the system with distilled water	Each Use
	Check the pump fittings and connections	Weekly
	Check the pump rollers and clean the system with Kemwash	Weekly
	Recheck the correct ISAC	Weekly
	Change the pump tubes	Bimonthly
	Reset bubble phase; correct for ISAC timing	Bimonthly
	Check the transmission tubing and connections and change as needed	Bimonthly
	Lubricate the main speed reduction gear on the pump	Biannual
	Inspect and/or change the transmission tubing and sleeving	Biannual
Spectronic 21 Spectrophotometer	Calibrate with analytical standards	Each Use
	Check the absorbance to transmittance calibration, adjust if needed	Quarterly
	Check the concentration factor & check calibration, adjust if needed	Quarterly

SECTION 12

SPECIFIC ROUTINE PROCEDURES USED TO ASSESS DATA PRECISION, ACCURACY AND COMPLETENESS

12.1 Precision Assessment

To assess the precision of analytical procedures, two environmental samples designated in the field as the matrix spike (MS) and matrix spike duplicate (MSD) samples are spiked with known amounts of the analyte or analytes to be evaluated. As specified in Section 3 of this Phase I QAPjP, MS/MSD samples will be collected at the rate of one MS/MSD for every 20 or fewer investigative samples. The duplicate spiked samples are analyzed, and the difference in the amount of the analyte detected in the two samples is compared to determine the relative percent difference (RPD). Daily control charts are plotted for the spiked compounds and kept on instrument-, matrix-, and analyte-specific bases. The RPD is calculated according to the following formula:

$$\text{RPD} = \frac{\text{Amount in Spike 1} - \text{Amount in Spike 2}}{0.5(\text{Amount in Spike 1} + \text{Amount in Spike 2})} \times 100$$

12.2 Accuracy Assessment

To assess the accuracy of analytical procedures, an environmental sample designated in the field as the matrix spike (MS) sample is spiked with a known amount of the analyte or analytes to be evaluated. As specified in Section 3 of this Phase I QAPjP, MS samples will be collected at the rate of one MS for every 20 or fewer investigative samples. The spike sample is analyzed, and the increase in concentration of the analyte observed in the spiked sample (due to the addition of a known quantity of the analyte) compared to the reported value of the same analyte in the unspiked sample determines the percent recovery. Daily control charts are plotted for each commonly analyzed compound and kept on instrument-, matrix-, and analyte-specific bases. The percent recovery for a spiked sample is calculated according to the following formula:

$$\%R = \frac{\text{Amount in Spiked Sample} - \text{Amount in Sample}}{} \times 100$$

Known Amount Added

12.3 Completeness Assessment

Completeness is the ratio of the number of valid sample results to the total number of planned sample analyses for a specific matrix and analytical procedure. Following completion of the analytical testing, the percent completeness will be calculated by the following equation:

$$\text{Completeness} = \frac{\text{(number of valid measurements)}}{\text{(number of measurements planned)}} \times 100$$

SECTION 13

CORRECTIVE ACTION

Corrective action is the process of identifying, recommending, approving and implementing measures to counter unacceptable procedures or out-of-quality-control performance which can affect data quality. Corrective action can occur during field activities, laboratory analyses, data validation and data assessment. All corrective action proposed and implemented should be documented in the regular quality assurance reports to management. Corrective action should only be implemented after approval by the CWM Vickery Project Manager, or his designee. If immediate corrective action is required, approvals secured by telephone from the CWM Vickery Project Manager and the U.S. EPA RCRA Project Coordinator should be documented in an additional memorandum.

For noncompliance problems, a formal corrective action program will be determined and implemented at the time the problem is identified. The person who identifies the problem is responsible for notifying the Rust Project Manager. The Rust Project Manager will involve other Rust and/or laboratory management as appropriate to the situation, and notify the CWM Vickery Project Manager, who in turn will notify the U.S. EPA RCRA Project Coordinator. If the problem is analytical in nature, information on these problems will be promptly communicated to the U.S. EPA, Quality Assurance Section. Implementation of corrective action will be confirmed in writing through the same channels.

Any nonconformance with the established quality control procedures in the Phase I QAPjP or Field Sampling Plan will be identified and corrected in accordance with the Phase I QAPjP. The CWM Vickery Project Manager, or his designee, will issue a nonconformance report for each nonconformance condition.

13.1 Field Corrective Action

Corrective action in the field can be needed when the sample network is changed (i.e., more/less samples, sampling locations other than those specified in the Phase I QAPjP, etc.), or when sampling procedures and/or field analytical procedures require modification due to unexpected conditions. In general, the field team (e.g., Rust field staff, Rust Field Team Leader, CWM

Vickery Project Manager) may identify the need for corrective action. The Rust field staff in consultation with the Rust Field Team Leader will recommend a corrective action. The CWM Vickery Project Manager will approve the corrective measure which will be implemented by the Rust field staff. It will be the responsibility of the Rust Field Team Leader to ensure the corrective action has been implemented.

If the corrective action will supplement the existing sampling plan using existing and approved procedures in the Phase I QAPjP (i.e., additional soil borings), corrective action approved by the CWM Vickery Project Manager will be documented. If corrective actions result in fewer samples (or analytical fractions), in alternate locations, or in other situations that would cause project quality assurance objectives not to be achieved, all levels of project management including the Rust Project Manager, the CWM Vickery Project Manager, and the U.S. EPA RCRA Project Coordinator must concur with the proposed action.

Corrective action resulting from internal field audits will be implemented immediately if data may be adversely affected due to unapproved or improper use of approved methods. The Rust QA Officer will identify deficiencies and recommended corrective action to the CWM Vickery Project Manager. Implementation of corrective actions will be performed by the Rust Field Team Leader and field staff. Corrective action will be documented in quality assurance reports to the entire project management.

Corrective actions will be implemented and documented in the field record book. No staff member will initiate corrective action without prior communication of findings through the proper channels. If corrective actions are insufficient, work may be stopped by the U.S. EPA RCRA Project Coordinator.

13.2 Laboratory Corrective Action

Corrective action in the laboratory may occur prior to, during and after initial analyses. A number of conditions such as broken sample containers, multiple phases, low/high pH readings, potentially high concentration samples may be identified during sample log-in or just prior to analysis. Following consultation with lab analysts and section leaders, it may be necessary for the GP Environmental Service QA Manager to approve the implementation of corrective action.

The submitted standard SOPs specify some conditions during or after analysis that may automatically trigger corrective action or optional procedures. These conditions may include dilution of samples, additional sample extract cleanup, automatic reinjection/reanalysis when certain quality control criteria are not met, etc. In these istuations, the bench chemist will identify the need for corrective action. The GP Environmental Services Operations Manager, in consultation with the GP Environmental Services staff, will approve the required corrective action to be implemented by the laboratory staff. The GP Environmental Services QA Manager will ensure implementation and documentation of the corrective action.

These corrective actions are performed prior to release of the data from the laboratory. The corrective action will be documented in both the GP Environmental Services's corrective action forms (signed by analyst, section leader and quality control coordinator), and the narrative data report sent from the laboratory to the Rust Data Validator.

If corrective action does not rectify the situation, the laboratory will contact the Rust Project Manager. If the nonconformance causes project objectives not to be achieved, it will be necessary to inform all levels of project management including the Rust Project Manager, the CWM Vickery Project Manager and the U.S. EPA RCRA Project Coordinator to concur with the corrective action.

13.3 Corrective Action During Data Validation and Data Assessment

The need for corrective action may be identified during either the data validation or data assessment. Potential types of corrective action may include resampling by the field team or reinjection/reanalysis of samples by the laboratory.

These actions are dependent upon the ability to mobilize the field team, whether the data to be collected is necessary to meet the required quality assurance objectives (e.g. the holding time for samples is not exceeded, etc.) When the Rust Data Validator identifies a corrective action situation during data assessment, the CWM Vickery Project Manager will be responsible for approving the implementation of corrective action, including resampling if necessary.

SECTION 14

QUALITY ASSURANCE REPORTS TO MANAGEMENT

The deliverables associated with the tasks identified in the Phase I RFI Work Plan and the monthly progress reports will contain separate QA sections in which data quality information collected during the task is summarized. Those reports will be the responsibility of the CWM Vickery Project Manager and will include the Rust QA Officer report on the accuracy, precision, and completeness of the data, the results of the performance and system audits, and any corrective action needed or taken during the project.

14.1 Contents of Project QA Reports

QA reports that accompany a deliverable will summarize all pertinent information relating to the activites and findings described in that deliverable (i.e., a summary of information contained in the monthly reports as relevant to the deliverable). The monthly QA reports will contain on a routine basis all results of field and laboratory audits, all information generated during the past month reflecting on the achievement of specific data quality objectives, and a summary of any corrective actions that were implemented (including their impacts to the project). The status of the project with respect to the project schedule in the Phase I QAPjP will be determined. Whenever necessary, updates on training provided, changes in key personnel, anticipated problems in the field or lab (that could bear on data quality), and proposed solutions to those problems will be reported. Detailed references to modifications of the Phase I QAPjP will also be highlighted. All QA reports will be prepared in written, final format by the CWM Vickery Project Manager or his designee.

In the event of an emergency, or in case it is essential to implement corrective action immediately, QA reports can be made by telephone to the individuals specified in the Corrective Action Section of this Phase I QAPjP (including the U.S. EPA RPC). However, these events, and their resolution will be addressed thoroughly in the next issue of the monthly QA report.

14.2 Frequency of QA Reports

QA Reports will be prepared on a monthly basis and will be delivered with the monthly progress report. The monthly reports will continue without interruption until the project has been completed. The frequency of any emergency reports that must be delivered verbally cannot be estimated at the present time. QA reports accompanying project deliverables will be attached to and incorporated in those deliverable and submitted concurrently.

14.3 Individuals Receiving/Reviewing QA Reports

The monthly QA report will be sent to the individuals identified as having management responsibilites in Section 2.2 of this Phase I QAPjP.

Appendix A

Effective Date: July 1995
Version Number: 1
Initiated By :
Approved By :

SOP No.: 13.1

Title : Volatile Organics - Method 8240B

1.0 SCOPE AND APPLICATION

This method is used by the GC/MS laboratory for the determination of the purgeable compounds in waste water and soil. The compounds listed below are grouped into two categories, Target Compounds and Appendix IX Compounds.

Target Compound List

1. Chloromethane
2. Bromomethane
3. Vinyl Chloride
4. Chloroethane
5. Methylene Chloride
6. Acetone
7. Carbon Disulfide
8. 1,1-Dichloroethene
9. 1,1-Dichloroethane
10. trans-1,2-Dichloroethene
11. Chloroform
12. 1,2-Dichloroethane
13. 2-Butanone
14. 1,1,1-Trichloroethane
15. Carbon Tetrachloride
16. Vinyl Acetate
17. Bromodichloromethane
18. 1,1,2,2-Tetrachloroethane
19. 1,2-Dichloropropane
20. trans-1,3-Dichloropropene
21. Trichloroethene
22. Dibromochloromethane
23. 1,1,2-Trichloroethane
24. Benzene
25. cis-1,3-Dicholoropropene
26. 2-Chloroethyl Vinyl Ether
27. Bromoform
28. 2-Hexanone
29. 4-Methyl-2-pentanone
30. Tetrachloroethene

31. Toluene
32. Chlorobenzene
33. Ethyl Benzene
34. Styrene
35. Total Xylenes

Appendix IX List

1. Acetonitrile
2. Acrylonitrile*
3. Allyl Chloride
4. 2-Chloro-1,3-butadiene
5. 1,2-Dibromo-3-chloropropane
6. Dibromomethane
7. 1,2-Dibromoethane
8. 1,2-Dichlorobenzene
9. 1,3-Dichlorobenzene
10. 1,4-Dichlorobenzene
11. trans-1,4-Dichloro-2-butene
12. Dichlorodifluoromethane
13. p-Dioxane*
14. Ethyl methacrylate
15. Isobutyl alcohol
16. Methacrylonitrile
17. Methyl iodide
18. Methyl methacrylate
19. Pentachloroethane
20. Propionitrile*
21. 1,1,1,2-Tetrachloroethane
22. Hexachloroethane
23. 1,2,4-Trichlorobenzene
24. Trichlorofluoromethane
25. 1,2,3-Trichloropropane

*Poor purging efficiency resulting in high EDL.

2.0 SUMMARY OF METHOD

2.1 The volatile compounds are introduced into a gas chromatograph by the purge and trap method.

2.2 An inert gas is bubbled through the solution at ambient temperature (at elevated temperatures for soil samples), and the volatile components are efficiently transferred from the aqueous phase to the vapor phase. The vapor is swept through a sorbent column where the volatile components are trapped. After purging is completed, the sorbent column is heated and backflushed with inert gas to desorb the components onto a gas chromatographic column. The gas chromatographic column is heated to elute the components, which are detected with a mass spectrometer.

3.0 INTERFERENCES

3.1 Interferences purged from the samples will vary considerably from source to source, depending upon the particular sample or extract being tested. The analytical system, however, should be checked to ensure freedom from interferences and contamination, under the analysis conditions, by analyzing method blanks.

4.0 APPARATUS AND MATERIALS

4.1 Gas Chromatograph

Hewlett-Packard 5890 Gas Chromatographic Systems (GC) are employed for execution of this method. The GCs are complete with temperature programming capabilities, and all required accessories such as columns, gases, cooling valves and syringes. Sample introduction is accomplished through the use of purge and trap systems.

4.2 Purge and Trap System

The Tekmar 2000 purge and trap system is coupled with the gas chromatographic system. It comes complete with the Tekmar 2016 sixteen position autosampler, and the sample heating device for soil samples.

The purge and trap device consists of three separate modules. The sample purger, the trap and the desorber. The purging chamber accepts vessels capable of holding at least 5-ml of liquid samples or 5 grams of soil samples.

The trap utilized by the laboratory is 25 cm long and has an inside diameter of 0.105 in. Traps are purchased from vendors such as Supelco, and consist of equal amounts of 2,6-diphenylene oxide polymer, silica gel and coconut charcoal. When the determination of fluorochlorocarbons in required, a different trap, containing no charcoal is utilized.

A complete description of the inner workings of this purge and trap model is available in the Tekmar 2000 manual.

4.3 Mass Spectrometer

The HP-5970 Quadropole Mass Selective Detector is used as the detection device for Method 8240. This system is capable of scanning from 35-260 amu every one second or less, using 70 volts (nominal) electron energy in the EI mode. After proper tuning,

the system produces a mass spectrum that meets all the criteria in

Table 4 when 50 ng of 4-Bromofluorobenzene (BFB) are injected through the gas chromatograph.

4.4 Data System

The HP-1000,RTE-A based computer system is interfaced to the GC/MS systems, to operate and control them. This system, coupled with the Aquarius software and internally developed software, allows the continuous acquisition and storage on sealed Winchester hard-disk drives, of all mass spectra obtained throughout the duration of the chromatographic program.

The system utilizes software that allows the search, of any data file for ions of a specified mass, and plots the ion abundances versus time or scan number. In other words, the system generates Extracted Ion Current Profiles. Ion abundances can be easily integrated utilizing a variety of integrator programs available in the HP software library. A full EPA/NIH Mass Spectral Library is available on the hard disk for spectral determination of unknown components.

4.5 Column

A Restek Megabore column, 60 meters in length, with a 0.53 mm internal diameter and 2.0 micron film thickness is used.

4.6 Microsyringes - 10 μl, 25 μl, 100 μl, 250 μl, 500 μl, and 1000 μl.

4.7 Luerlock syringe - 5 ml gas tight.5.0 REAGENTS

5.1 Organic free reagent water.

5.2 Stock solutions.

5.3 Methanol, High purity grade, B & J Brand for Purge and Trap analysis.

6.0 PROCEDURE

6.1 Calibration

Five concentration levels for each analyte. A five point curve is then created after all 5 points are analyzed.

6.2 Instrumentation Parameters

The following set of operating conditions exist for method 8240.

Electron energy:	70 volts (nominal)
Mass range:	35-260 amu
Scan time:	To give 5 scans/peak but not to exceed 7 sec/scan

Initial column temperature:	10°C
Initial column holding time:	4 min
Column temperature program:	8°C/minutes
Final column temperature:	180°C
Final column holding time:	1 min
Injector temperature:	200°C
Source temperature:	According to manufacturer's specifications
Transfer line temperature:	290°C (Preset to manufacturer)
Carrier gas:	Helium at 8 ml/min

6.3 Tuning

At the beginning of each day, each GC/MS system is injected with 50ng of BFB and tuned to meet the criteria listed in Table 4. No analysis begins unless the criteria are met. This requirement must be met for each 12 hour interval.

6.4 Calibration Requirements

Once tuning requirements are met, the initial or continuing calibration check must be established. The generation of response factors is the next step in establishing the calibration requirements for method 8240. The instructions for determining the response factors are as follows:

Tabulate the area response of the characteristic ions (see Table 1) against the concentration for each compound and each internal standard. Calculate response factors (RF) for each compound relative to one of the internal standards. The internal standard selected for the calculation of the RF for a compound should be the internal standard with the retention time closest to the compound being measured. The RF is calculated as follows:

$$RF = \frac{(A_x C_{is})}{(A_{is} C_x)}$$

where:

A_x - Area of the characteristic ion for the compound being measured.

A_{is} = Area of the characteristic ion for the specific internal standard.

C_{is} = Concentration of the specific internal standard.

C_x = Concentration of the compound being measured.

The average RF must be calculated for each compound. A system performance check should be completed before the calibration curve is used. Five compounds (the System Performance Check Compounds, or SPCCs, are checked for a minimum average response factor. These compounds are chloromethane, 1,1-dichloroethane, bromoform, 1,1,2,2-tetrachloroethane , and chlorobenzene. The minimum acceptable average RF for these compounds should be 0.300 (0.250 for bromoform). These compounds typically have RFs of 0.4-0.6 and are used to check compound instability and check for degradation caused by contaminated lines or active sites in the system. Initial calibration is analyzed at 5 levels. These levels are 20, 50, 100, 150 and 200μg/l. The following compounds (Appendix IX) have higher initial calibration levels.

Acrylonitrile	50	125	250	375	500
Propionitrile	100	250	500	750	1000
p-Dioxane	100	250	500	750	1000

Using the RFs from the initial calibration, calculate the percent relative standard deviation (% RSD) for all compounds (CCCs).

$$\% \text{ RSD} = \frac{SD}{\bar{x}} \times 100$$

where:

RSD = relative standard deviation

$\bar{X}$ = mean of 5 initial RFs for a compound

N = Number of calibration point

SD = standard deviation of average RFs

for a compound

X_i = Response factor for each point

$$SD = \left[\sum_{i=1}^{N} \frac{(x_i - \bar{x})^2}{N - 1}\right]^{1/2}$$

The % RSD for each individual analyte should be <u>less</u> than 25 percent. This criterion must be met in order for the individual calibration to be valid. The CCCs are:

1,1-Dichloroethene
Chloroform
1,2-Dichloropropane
Toluene
Ethylbenzene
Vinyl chloride

The initial calibration curve for each compound of interest must be checked and verified once every 12 hours of analysis time. This is accomplished by analyzing a 50 ppb calibration standard and checking the SPCC and CCC.

System Performance Check Compounds (SPCCs) - A system performance check must completed each 12 hours. If the SPCC criteria are met, a comparison of response factors is made for all compounds. This is the same check that is applied during the initial calibration. If the minimum response factors are not met, the system must be evaluated, and corrective action must be taken before sample analysis begins. The minimum response factor for volatile SPCCs is 0.300 (0.250 for Bromoform). Potential problems include standard mixture degradation, injection port inlet contamination, contamination of the front end of the analytical column, and active sites in the column or chromatographic system.

$$\% \text{ Difference} = \frac{\overline{RF_i} - RF_c}{\overline{RF_i}} \times 100$$

where:

$\overline{RF_I}$ = average response factor from initial calibration

RF_c = response factor from current verification check standard

If the percent difference for any compound is greater than 20, the laboratory should consider this a warning limit. If the percent difference for each analyte is less than 25%, the initial calibration is assumed to be valid. If the criterion is not met (> 25% difference), for any one analyte, corrective action MUST be taken. If no source of the problem can be determined after corrective action has been taken, a new five-point calibration MUST be generated. This criterion MUST be met before quantitative sample analysis begins.

The internal standard response and retention times in the calibration check standard must be evaluated immediately after or during data acquisition.

6.5 Retention Time Change

If the retention time for any internal standard changes by more than 30 sec. from the last check calibration or any internal standard area changes by a factor of 2 (-50% to +100%), from the last continuing calibration standard, then all affected samples must be reanalyzed after the problem is corrected.

6.6 Qualitative Analysis

6.6.1 The compounds listed in Section 1 shall be identified by an analyst by comparison of the sample mass spectrum to the mass spectrum of a standard of the suspected compound. Two criteria must be satisfied to verify the identification.

6.6.1.1 Relative relation time of the sample and standard must agree ± 0.05.

6.6.1.2 Correspondence of the sample component and standard component mass spectra.

6.7 The requirement for qualitative verification by comparison of mass

spectra are as follows:

All ions present in the standard mass spectra at a relative intensity greater then 10% must be present in the sample spectrum. All ions specified must agree within ± 20% between the standard and sample spectra. Ions greater than 10% in the sample spectrum but not present in the standard spectrum must be considered and accounted for.

6.8 For non-TCL components a library search may be executed. Up to 20 non-surrogate organic compounds shall be tentatively identified. Guidelines for making tentative identification:

6.8.1 Ions greater than 10% of the most abundant ion should be present in the sample spectrum.

6.8.2 Relative intensities of the major ions should agree within ± 20%.

6.8.3 Molecular ion present in the reference spectrum should be present in sample spectrum.

6.8.4 Ions present in the sample spectrum but not in the reference spectrum should be reviewed for possible background contamination or presence of co-eluting compounds.

6.9 GC/MS Analysis

6.9.1 Water Samples

6.9.2 All samples and standard solutions must be allowed to warm to ambient temperature before analysis.

6.9.3 BFB tuning criteria and daily GC/MS calibration criteria must be met before analyzing samples.

6.9.4 Adjust the purge gas (Helium) flow rate to about 40 ml/min on the purge and trap device.

6.9.5 Remove the plunger from a 5 ml syringe. Open the sample and carefully pour the sample into the syringe barrel to just short of overflowing. Compress the sample. Vent any residual air while adjusting the sample volume to 5.0 ml.

6.9.6 Add 5.0 μl of surrogate spiking solution and 5 μl of internal standard solution through the valve bore of the syringe.

6.9.7 For matrix spike analysis, add 5 μl of the matrix spike

solution to the sample to be purged.

6.9.8 The samples are analyzed with appropriate dilution when the concentration level of any analyte exceeds the calibration range. Dilutions are made in the 5 ml gastight luer lock syringe by adding reagent water. Calculate the volume of reagent water needed for the dilution and add into a 4 ml syringe. Using a suitable syringe, add the exact volume of sample into the reagent water in the 5ml syringe. Add 5 μl of Internal Standard & Surrogate and analyze as discussed above.

If the dilute sample has a concentration of analytes that exceeds the initial calibration range, the sample must be reanalyzed at a higher dilution.

6.9.9 The spiked sample is injected into a purging tube attached to the Purge & Trap device. Purge the sample for 11 minutes and desorb the contents of the trap at 175° for 2 minutes into the GC/MS.

6.10 Sediment/Soil and Waste Samples

6.10.1 Low Concentration method: Applicable for samples containing individual compounds of <1 mg/kg. All granular/porous waste/sediment/soil samples can be analyzed using this method.

Weigh 5 gms of the sample into a glass sparge tube and record the weight to the nearest 0.1 g. Add reagent water to a 5 ml luerlock type syringe and adjust the volume to 5 ml. Add 5ml of internal standard and 5 μl of surrogate standard to the water. Connect the sparge tube with the sample to the purge & trap device and add the spiked water to the sample. Heat the sample to 40°C $\pm$1°C and purge the sample for 11 minutes.

If the concentration level of any analyte exceeds the calibration range and is below 1 mg/kg, the sample should be analyzed by weighing 1 g of the sample. If the concentration level of any analyte is higher than 1 mg/kg, then the high concentration method should be used.

6.10.2 High concentration method: The method is based on

extracting the soil/sediment with methanol. Weigh 4gm of the sample into a 20 ml vial using a top loading balance. Record the weight to the nearest 0.1g. Using a pipet, add 10.0 ml methanol into the vial. Close the cap and shake for 2 minutes. 100 µl of the extract is added to reagent water collected in a 5 ml luerlock syringe. 5 µl each of Internal Standard and Surrogate are added to the syringe. Proceed with the analysis as outlined in the water sample analysis. If further dilution is needed, a smaller extract volume is used and the same procedure is repeated.

A separate method blank containing 100 µl methanol should be analyzed prior to a high concentration sample analysis and should be free of contaminants.

7.0 QUALITY CONTROL

7.1 Prior to initiating any on going data is necessary that the GC/MS meets BFB abundance criteria (Table 4) every twelve (12) hour period for the method.

7.2 When twelve (12) hours have elapsed since the initial tune, the GC/MS must be retuned to continue analysis.

7.3 If the retention time of the standard changes by more than 30 seconds, the GC system must be inspected for malfunction.

7.4 Surrogate recoveries must be evaluated by determining whether the concentrations fall inside the required recovery limits listed in Table 5.

7.5 A matrix spike and spike duplicate must be performed every 20 samples.

7.6 A method blank must be performed for each 12 hour time period.

7.6.1 A method blank for volatile analysis must contain less than or equal to 5 times the CRQL of methylene chloride, acetone, toluene and 2-butanone.

7.6.2 For all other target compound list not listed above, the method blank may contain less than or equal to the CRQL of any single analyte.

8.0 SAFETY

8.1 Safety glasses for eye protection, laboratory coats for body protection, latex gloves for hand protection.

8.2 Due to the toxicity or carcinogenicity of each reagent, each chemical compound should be treated as a potential health hazard.

8.3 Material Safety Data Sheets (MSDS) can be found on the procurement bookshelves in the library.

8.4 Preparation of standard should be handled under a hood.

9.0 REFERENCES

9.1 Test Methods for Evaluating Solid Waste, Physical/Chemical Methods, SW-846, 3rd Edition

TABLE 1

FRACTION	MATRIX SPIKE COMPOUNDS	ACCEPTABLE RECOVERY RANGES WATER	SOIL/SEDIMENT
VOA	1,1-Dichloroethene	61-145	59-172
VOA	Trichlorethene	71-120	62-137
VOA	Chlorolenzene	75-130	60-133
VOA	Toluene	76-125	59-139
VOA	Benzene	76-127	66-142

TABLE 2

CALIBRATION CHECK COMPOUNDS

1 - 1,1-Dichloroethene

2 - Chloroform

3 - 1,2-Dichloropropane

4 - Toluene

5 - Ethylbenzene

6 - Vinyl chloride

TABLE 3

SYSTEM PERFORMANCE CHECK COMPOUNDS

1 - Chloromethane

2 - 1,1-Dichloroethane

3 - Bromoform

4 - 1,1,2,2-Tetrachloroethane

5 - Chlorobenzene

TABLE 4

BFB KEY ION ABUNDANCE CRITERIA

Mass	Ions Abundance Criteria
50	15 to 40% of mass 95
75	30 to 60% of mass 95
95	base peak, 100% relative abundance
173	less than 2% of mass 174
174	greater than 50% of mass 95
175	5 to 9% of mass 174
176	greater than 95% but less than 101% of mass 174
177	5 to 9% of mass 176

TABLE 5

SURROGATE SPIKE RECOVERY LIMITS FOR WATER AND SOIL/SEDIMENT SAMPLES

SURROGATE COMPOUND	LOW/MEDIUM WATER	LOW/MEDIUM SOIL/SEDIMENT
4-Bromofluorbenzene	86-115	74-121
1,2-Dichloroethane-d_4	76-114	70-121
Toluene-d_8	88-110	81-117

METHOD 8240B
VOLATILE ORGANICS BY GAS CHROMATOGRAPHY/MASS SPECTROMETRY (GC/MS)

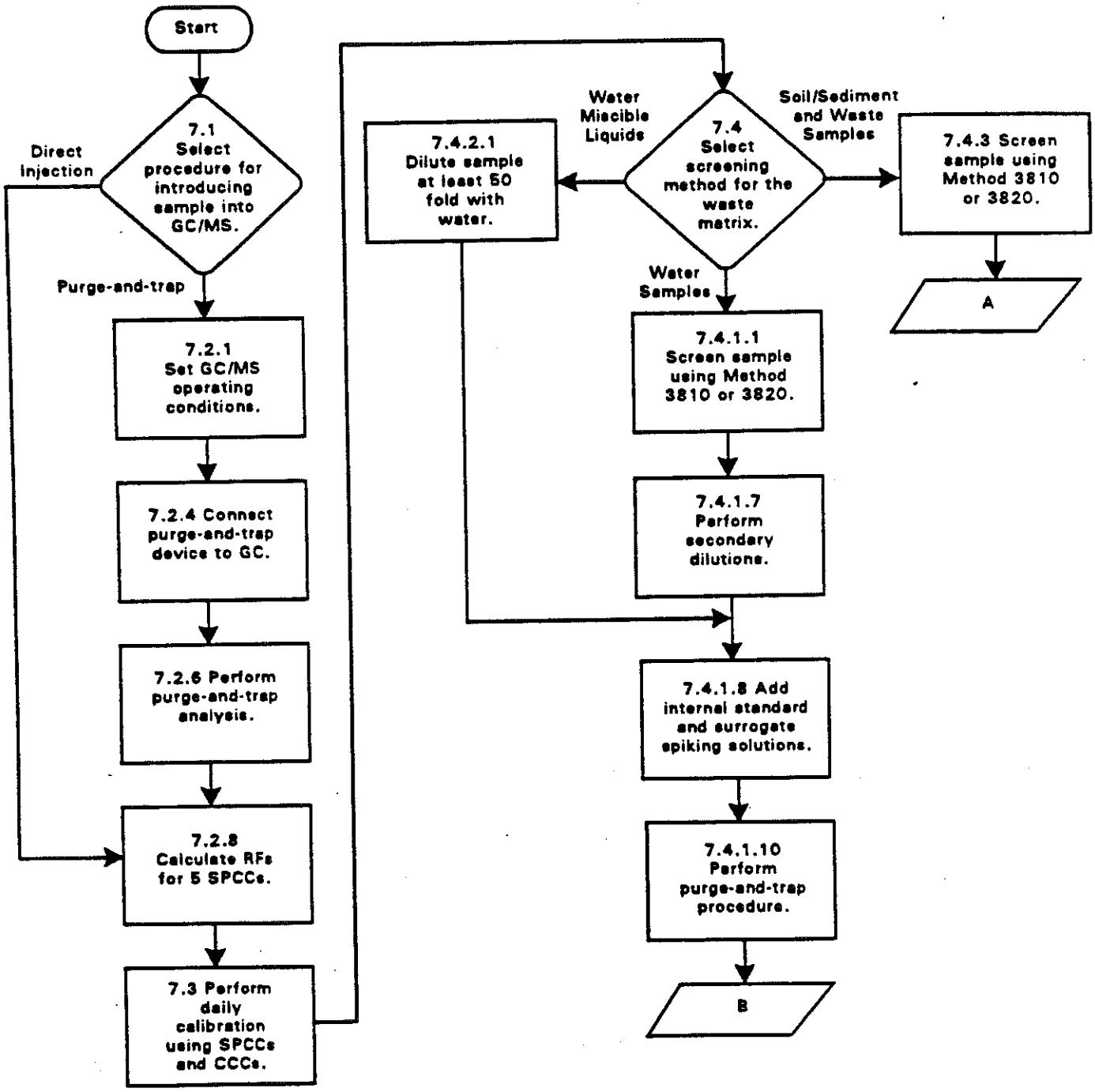

METHOD 8240B
(continued)

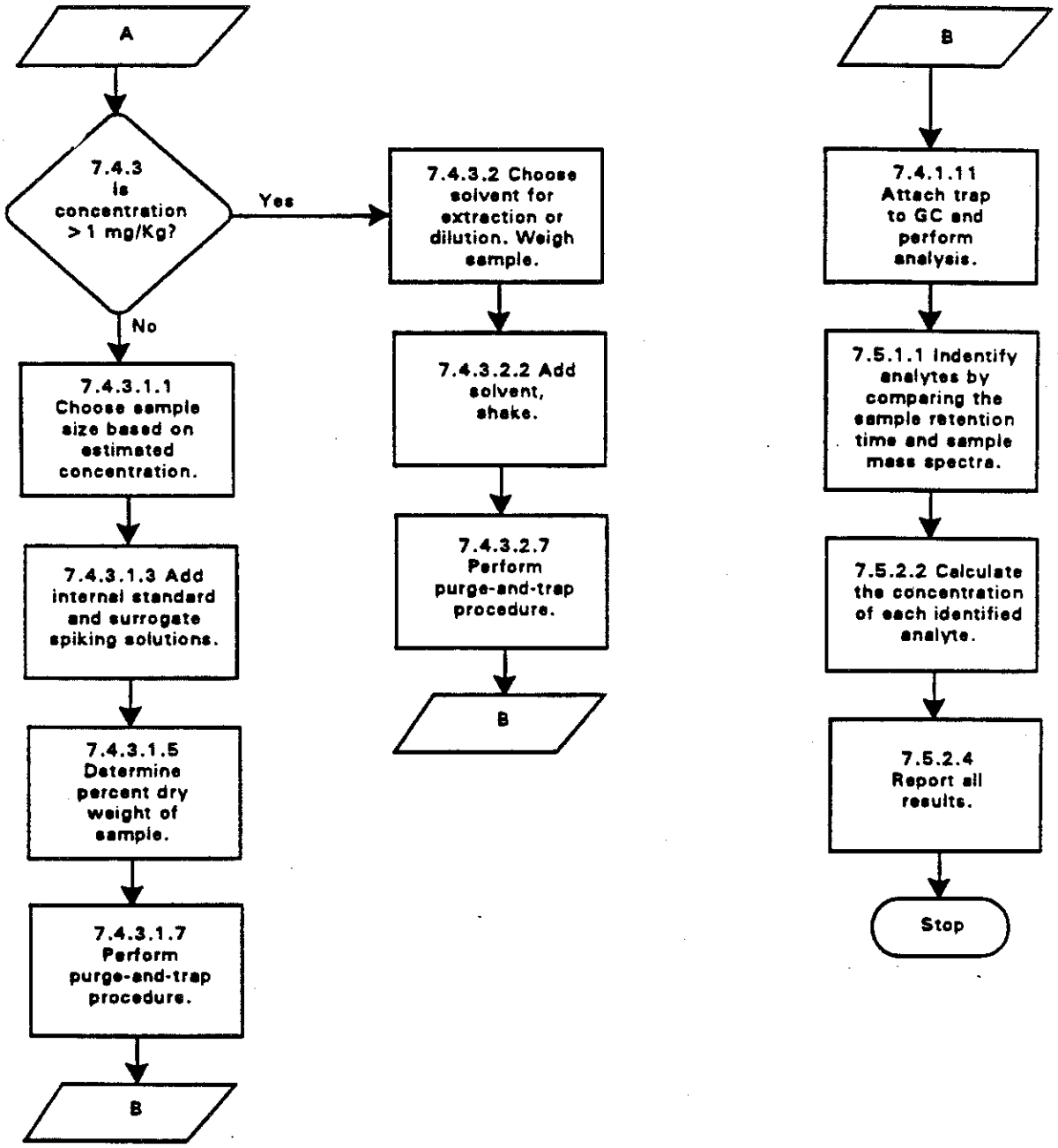

GP ENVIRONMENTAL SERVICES, INC.

Controlled Copy No. 0

Effective Date: December 1993
Version Number: 1
Initiated By :
Approved By :

SOP No.: 12.17

Title : Soil Extraction for Semivolatile Organics by Method 3550 (Sonication Extraction).

1.0 APPLICATION AND SCOPE

1.1 This method describes the procedure for extracting non-volatile and semi-volatile organic compounds from solids such as soils. Extracts are suitable for analysis by method 8270.

2.0 SUMMARY OF METHOD

2.1 Method 3550 describes both a high level and low level technique. This SOP is based on the low level version of method 3550.

2.1 A 30g sample is mixed with anhydrous sodium sulfate to form a free-flowing powder. This is solvent extracted three times using sonication. The extract is separated from the sample by filtration. The extract is ready for cleanup following concentration.

3.0 INTERFERENCES

3.1 Solvents, reagent, glassware, and other sample processing hardware may yield artifacts and/or interferences to sample analysis. These materials must be demonstrated to be free from interferences under the conditions of the analysis by analyzing method blanks.

4.0 APPARATUS AND MATERIALS

4.1 Mortar Model 155 Grinder, Fisher Scientific Company, or an equivalent brand and model.

4.2 Ultrasonic cell disrupter, Heat Systems - Ultra Sonic, Inc., Model W-385 (475 watt) Sonicator or equivalent (power wattage must be a minimum of 375 with pulsing capability and No. 200 1/2" Tapped Disrupter Horn) plus No. 207 3/4" Tapped Disrupter Horn, and No. 419 1/8" Standard Tapped Microtip Probe.

4.3 Apparatus for Determining Percent Moisture

- Oven: drying
- Desiccator
- Crucibles: Porcelain

4.4 Pasteur Glass Pipets, Disposable, 1-ml

4.5 Beakers, 400-ml

4.6 Filtration Apparatus

- Conical funnel
- Filter paper: Whatman No. 41 or equivalent

4.7 Kuderna-Danish (K-D) Apparatus

4.7.1 Concentrator tube: 10-ml graduated (Kontes K-570050-1025 or equivalent).

4.7.2 Evaporator Flask: 500-ml (Kontes K-570001-0500 or equivalent).

4.7.3 Snyder Column: Three-ball macro (Kontes K-503000-0121 or equivalent).

4.8 Solvent extracted Boiling Chips, approximately 10/40 mesh (Silicon Carbide or equivalent)

4.9 Heated Water Bath, with concentric ring cover, capable of temperature control (± 5°C). The bath should be used in a hood.

4.10 Top-loading Analytical Balance, capable of accurately weighing 0.001 grams.

4.11 2 ml and 12 ml Vials and Caps

4.12 Glass Funnel

4.13 Nitrogen evaporation device equipped with a water bath that can be maintained at 35-40°C.

4.14 Spatula, Stainless steel or Teflon

4.15 Syringe, 1-ml

4.16 Large disposable glass pipets

5.0 REAGENTS

5.1 Sodium Sulfate; Anhydrous and reagent grade, heated at 400°C for 4 hours, cooled in a desiccator, and stored in a glass bottle. Baker anhydrous powder, catalog # 73898, or equivalent.

5.2 Methylene chloride: acetone (1:1, V:V)

5.3 Methylene chloride (B&J GC2 grade, or equivalent)

6.0 PROCEDURE

6.1 Sample Handling

6.1.1 Sediment/soil samples: Decant and discard any water layer on a sediment sample. Mix sample thoroughly, especially composited samples. Discard any foreign objects such as sticks, leaves, and rocks.

6.2 Determination of Percent Moisture

In most cases sample results are desired based on a dry-weight basis. When such data is desired, a portion of sample for moisture determination should be weighed simultaneously with the portion used for analytical determination.

Immediately after weighing the sample for extraction, weigh 5-10 g of the sample into a tared crucible. Determine the percent moisture by drying overnight at 105°C. Allow to cool in a desiccator before weighing.

$$\frac{\text{g of Sample} - \text{g of dry Sample}}{\text{g of Sample}} \times 100 = \%\ \text{moisture}$$

6.3 Determination of pH

Transfer 50 g of sample to a 100-ml beaker. Add 50 ml of water and stir for 1 hour. Determine the pH of sample with pH paper. Discard this portion of sample. A lesser amount of sample may be used if an appropriate amount is unavailable. Adjust the amount of water proportionally.

6.4 The following step should be performed rapidly to avoid loss of the more volatile extractables. Weigh approximately 30 g of sample into a 200-ml beaker. Record the weight to be nearest 0.01 g. To ensure an efficient extraction, all samples must be dried by mixing with 60 g of anhydrous sodium sulfate using a spatula. The sample should be free-flowing at this point. Add 1-ml of surrogate standards to all samples, spikes, and blanks. For the sample in each analytical batch selected for spiking, add 1.0 ml of the matrix spiking standard. The amount added for the surrogates and matrix spiking compounds should result in a final concentration of 3300 µg/Kg of each base/neutral analyte and 6600 µg/Kg of each acid analyte in the extract to be analyzed. Immediately add 100-ml of 1:1 methylene-chloride: Acetone.

6.5 Place the bottom surface of the tip of the #207 3/4" disrupter horn approximately 1/2" below the surface of the solvent, above the sediment layer.

6.6 Sonicate for 3 minutes with the output control knob set at 10, the mode switch set on pulse, and the percent-duty cycle knob set at 8-10. DO <u>NOT</u> use a microtip probe.

6.7 Decant and filter extracts through Whatman No. 41 filter paper, or centrifuge and decant extraction solvent.

6.8 Repeat the extraction two more times using two additional 100-ml portions of solvent. Decant and filter the extraction solvent after each sonication. On the final sonication, pour the entire sample into the conical funnel and rinse with extraction solvent.

6.9 Assemble a Kuderna-Danish (K-D) Concentrator by attaching a 10-ml concentrator tube to a 500-ml evaporative flask.

6.10 Dry the extract by passing it through a drying column containing approximately 10 cm of anhydrous Sodium Sulfate. Collect the dried extract in a K-D Concentrator. Wash the extractor flask and Sodium Sulfate Column with 100-125 ml of extraction solvent to complete the quantitative transfer.

6.11 Add one or two clean boiling chips to the evaporative flask and attach a three-ball Snyder Column. Pre-wet the Snyder Column by adding approximately 1-ml methylene chloride to the top. Place the K-D apparatus in a hot water bath (80-85°C) so that the concentrator tube is partially immersed in the hot water and the entire lower rounded surface of the flask is bathed with hot vapor. Adjust the vertical position of the apparatus and the water temperature, as required, to complete the concentration in 10-15 minutes. At the proper rate of distillation the balls of the column will actively chatter however, the chambers will not

flood with condensed solvent. When the apparent volume of liquid reaches 1-ml, remove the K-D apparatus and allow to drain and cool for at least 10 minutes.

6.12 Remove the Snyder Column and rinse the flask and lower joints into the concentrator tube with 1-2 ml of methylene chloride. The extract may be further concentrated and adjusted to 1.0 ml using the solvent.

6.13 Transfer the concentrated extract to a clean 2ml vial. Seal the vial with a Teflon-lined lid and mark the level on the vial. Label with the sample number and fraction and store in the dark at 4°C.

7.0. QUALITY CONTROL

7.1 Method Blank

7.1.1 A method blank for a soil sample consists of purified solid matrix (NA_2SO_4) which is carried through the entire extraction. The method blank weight must be approximately equal to the sample weights being processed.

7.1.2 Method Blank

A method blank extraction must be performed once:

- daily, or
- each 20 samples in a case, including matrix spike or
- whenever samples are extracted by the same procedure.

7.2 Matrix Spike/Matrix Spike Duplicate

7.2.1 Matrix Spike/Matrix Spike Duplicate frequency of extraction

A matrix spike and matrix spike duplicate must be performed once:

- each 20 field samples in a case, or
- each 30 calendar day period during which field samples in a case are received.

7.3 Matrix Spiking Solutions

Base/Neutrals	Conc.	Acids	Conc.
1,2,3-Trichlorobenzene	100 µg/ml	Pentachloro-phenol	200 µg/ml
Acenaphthene	100 µg/ml	Phenol	200 µg/ml
2,4-Dinitrotoluene	100 µg/ml	2-Chlorophenol	200 µg/ml
Pyrene	100 µg/ml	4-chloro-3-methylphenol	200 µg/ml
N-Nitroso-Di-n-Propylamine	100 µg/ml	4-Nitophenol	200 µg/ml
1,4-Dichlorobenzene	100 µg/ml		

7.4 Surrogate Spike

Each sample, matrix spike, matrix spike duplicate and blank are spiked with surrogate compounds prior to extraction.

Surrogate Spiking Compounds

Base/Neutral	Conc.	Acid	Conc.
Nitrobenzene-d_5	100 µg/ml	2-Florophenol	200 µg/ml
2-Flourobiphenyl	100 µg/ml	2,4,6-Tribromophenol	200 µg/ml
P-Terphenyl-d_{14}	100 µg/ml	Phenol-d_5	200 µg/ml

8.0 SAFETY

8.1 Safety glasses, lab coat, and gloves should be worn at all times during extraction.

8.2 Label reagents, spikes, surrogate solutions with solution type, concentration, date, chemist's initials and shelf life.

9.0 REFERENCES

9.1 Test Methods for Evaluating Solid Waste, Physical/Chemical Methods, SW-846, 3rd Edition

SOP No.: 13.34

Title : SOP for Method SW 8270B
GC/MS Analysis of The Target Compound List and Appendix IX Semivolatile Organics

1.0 SCOPE AND APPLICATION

1.1 This Standard Operating Procedure (SOP) describes the methodology used to determine the concentration of semivolatile organic compounds in extracts prepared from all types of solid waste matrices, soils, and water. Table 1 indicates Target Compound List (TCL) typically determined by this method and lists the method suggested detection limits for water and soil. Table 2 lists the Appendix IX compounds which can be determined using 8270 methodologies.

2.0 SUMMARY OF METHOD

2.1 Prior to using this method, the samples should be prepared for chromatography using the appropriate sample preparation methods.

3.0 INTERFERENCE

3.1 GC/MS data from all blanks, samples, and spikes must be evaluated for interferences. Determine if the source of interference is in the preparation of the samples and initiate corrective action to eliminate the problem.

3.2 Contamination by carryover can occur whenever high-level and low-level samples are sequentially analyzed. To reduce carryover, the sample syringe must be rinsed with solvent between each use.

4.0 APPARATUS AND MATERIALS

4.1 Gas Chromatograph/Mass Spectrometer

Hewlett Packard 5970 MSD System equipped with an autosampler is utilized. The HP 5970 MSD is a complete instrument composed of two modules: a Controller and a main frame GCMS.

4.1.1 The controller is composed of an HP 1000 minicomputer and scanning interface which is a smaller computer. The data system is equipped with RTE/A and Aquarius software package.

4.1.2 The main frame GC/MS includes a microprocessor controlled GC oven and temperature zones. The data system is equipped with a rack mounted disc drive and 600 ft tape cartridges, tape drive. The system is also connected to a 7970E, 1600 bpi 8 track magnetic tape drive. There are 4 working terminals and 3 dot matrix printers connected to this system.

4.2 Columns

A 30 meter 0.25 mm ID, 1.0μ meter RTX-5 (5% phenyl methyl silicon) Restek column is used.

4.3 Syringe: 10 μl

5.0 GC CONDITION

5.1 The following GC parameters are established:

- Injection port temp 280°C
- Interface temp 300°C
- Initial temp 40°C
- Initial time 4 min
- Rate at 15°C per min
- Final temp 310°C
- Final time 20 min
- Equilibrium time .5 min
- Septum purge flow on at .5 ml/min
- Septum purge flow on at .5 min
- Flow rate at about 0.7 ml/min
- Splitless flow about 50 ml/min
- Injection type "Splitless"
- Autosampler injection mode "Fast"
- Sample Volume 1 μl.

5.2 GC/MS CONDITION

5.2.1 Scanning from 35 to 500 amu in less than 1 second, using 70 volt (nominal) electron energy in the Electron Impact Ionization mode. Scan delay is past solvent peak or ends about 7 minutes.

5.2.2 GCMS Tuning - to determine the system performance, 50 ng of decafluorotriphenylphosphine (DFTPP) is injected and the mass spectrum is evaluated. The following criteria must be met before any further analysis is performed.

DFTPP KEY IONS AND ION ABUNDANCE CRITERIA

MASS	ION ABUNDANCE CRITERIA
51	30-60% of mass 198
68	<2% of mass 69
70	<2% of mass 69
127	40-60% of mass 198
197	<1% of mass 198
198	Base peak, 100% relative abundance
199	5-9% of mass 198
365	>1% of mas 198
441	Present but less than mass 443
442	>40% of mass 198
443	17-23% of mass 442

5.3 CALIBRATION

5.3.1 Upon satisfactory completion of DFTPP analysis, five levels of calibration standards at 20, 50, 80, 120 and 160 ng are analyzed. Calibration standards must contain the following internal and surrogate standards. Appendix IX calibration standards are also analyzed at 20, 50, 80, 120 and 160ng, except for those compounds with low instrument sensitivities. Calibration for poor sensitivity compounds are performed with the exclusion of 20ng standard.

5.3.1.1 Internal Standards - the following Internal Standards at 40μg/ml must be present in the Calibration Standard.

- 1,4-dichlorobenzene-d_4
- Naphthalene-d_8
- Acenaphthane-d_{10}
- Phenanthrene-d_{10}
- Chrysene-d_{12}
- Penylene-d_{12}

5.3.1.2 The following Surrogate Standards at 20, 50, 80, 120 and 160 ng are analyzed.

- Phenol-d_6
- 2-Fluorophenol
- 2,4,6-Tribromophenol
- nitrobenzane-d_5
- 2-fluorobiphenyl
- p-terphenyl-d_{14}

5.4 After analyzing the initial Calibration Standard the average RF (Response Factor) should be calculated for each compound. The percent relative standard deviation (% RSD) should be calculated for each compound. Calibration Check Compounds (CCC) must have a % RSD less than 30%. The relative retention times of each compound in each calibration run should agree within 0.06 relative time units. System performance check compounds must have a minimum RF of 0.05. The CCC and SPCC compounds are listed as follow:

SPCC	CCC
N-nitroso-di-n-prophylanine	Acenaphthene
hexachlorocyclopantachiene	1,4-Dichlorobenzene
2,4-dinitrophenol	N-Nitroso-di-nphenylamine
4-nitrophenol	Di-n-octylphthalate
	Fluorantane
	Benzo(a)pyrane
	4-chloro-3-methylphenol
	2,4-Dichlorophenol
	2-Nitrophenol
	Phenol
	Pentachlorophenol
	2,4,6-Trichlorophenol

5.5 Internal Standard responses and retention times in the calibration check, blanks and samples must be evaluated. Retention time variation for any internal standard must be less than 30 seconds from the 12 hour calibration check. Variation of the areas for internal standards must not vary by more than a factor of two or -50% to +100%.

5.6 A continuing calibration (daily) at 50 ng concentration containing all semivolatile analytes, including all required surrogates must be analyzed every 12 hours. The following criteria must be met before sample analysis starts:

- CCC < 30% RSD
- SPCC $\geq$ 0.050 RF
- Internal Standard Area -50 to +100%
- Retention time for Internal Standards $\pm$ 30 seconds

6.0 SAMPLE ANALYSIS

6.1 Initially 0.5 ml of Acid and Base Neutral extracts are combined and 10 μl of 4000 μg/ml internal standard is added to each mix. One μl of this extract is injected into the GCMS using the same parameters as the calibration standard. All samples must be injected within a 12 hour period starting with analysis of DFTPP.

6.2 Qualitative Analysis

6.2.1 Two criteria must be satisfied to verify compound identification

6.2.1.1 Elution of sample component at the same GC relative retention time (RRT) ±0.06 units.

6.2.1.2 Correspondence of the sample component and the standard component mass spectrum.

All ions present in the standard mass spectrum at a relative intensity greater than 10% must be present in the sample spectrum. The relative intensity of these ions must agree ± 20% between the standard and sample spectra.

6.2.2 Library Search

6.2.2.1 When required, a search may be performed for the purpose of tentative identification. Only after visual comparison of sample spectra with the nearest library searches will the analyst assign a tentative identification. The analyst should use an approach similar to the 5 step identification listed for method SW 8270 (pp-18), Sept 1986.

6.3 Quantitative Analysis

6.3.1 When a compound is identified, the quantitation of that compound will be based on the integrated abundance from the EICP of the primary characteristic ion. Quantitation is based on the internal standard technique. The internal standard nearest the retention time of that given analyte, shall be used.

7.0 CALCULATIONS

The following information should be used throughout the quantitation process.

7.1 Response Factor

$$RF = \frac{(A_x C_{is})}{(A_{is} C_x)}$$

Where:

A_x = Area of the characteristic ion for the compound being measured.

A_{is} = Area of the characteristic ion for the specific internal standard

C_x = Concentration of the compound being measured (μg/ml)

C_{is} = Concentration of the specific internal standard (μg/ml)

7.2 % RSD and % Difference

$$\% \text{ RSD} = \frac{\text{Standard Deviation}}{\text{Average RF}} \times 100$$

$$\% \text{ difference} = \frac{\text{AvgRF}_i\text{(initial calibration)} - \text{RF}_c\text{(Continuing Calibration)}}{\text{Avg RF}_i} \times 100$$

7.3 Sample Calculation

Water Concentration = $\mu g/l$

$$\frac{(A_x)(I_s)(V_t)(Dil)}{(A_{is})(RF)(V_o)(V_i)}$$

Soil concentration = $\mu g/kg$

$$\frac{(A_x)(I_s)(V_t)(Dil)}{(A_{is})(RF)(V_i)(W_s)(D)}$$

Where:

I_s = Amount of internal standard injected (ng)

V_t = Volume of total extract

V_o = Initial volume

V_i = Volume of extract injected (ml)

W_s = Weight of sample extracted (G)

D = Percent solids

Dil = Dilution applied

8.0 QUALITY CONTROL

8.1 Blank analysis - A method blank is analyzed with each analytical batch to examine the interferences and contamination from extraction and analysis. Concentration of the target compounds in the blank must be less than or equal to the PQL except for phthalate esters which can be 5 times the PQL. If the above criteria are not met, reinjection or reextraction of the blank and the samples is required.

8.2 Surrogate analysis - Surrogate standard determinations are performed on all samples and blanks. The following range of recoveries is suggested.

SURROGATE COMPOUND	WATER	LOW/MEDIUM SOIL/SEDIMENT
Nitrobenzene-d_5	35-114	23-120
2-Fluorobiphenyl	43-116	30-115
p-Terphenyl-d_{14}	33-141	18-137
Phenol-d_6	10-94	24-113
2-Fluorphenol	21-100	25-121
2,4,6-Tribromophenol	10-123	19-122

If recoveries of 2 surrogates in either the BN or acid fraction are outside the surrogate spike recovery limits, or recovery of any one surrogate in either the BN or Acid is below 10%, corrective action should be taken. First, re-inject the sample - if no improvement is observed, reextraction should be considered. The blank and all samples associated with the blank should be re-extracted.

8.3 Matrix Spikes - A matrix spike and matrix spike duplicate are analyzed with each case of 20 samples. Recoveries of MS/MSD should be calculated and listed. The following range of recoveries are suggested:

MATRIX SPIKE RECOVERY LIMITS

FRACTION	MATRIX SPIKE COMPOUND	WATER	SOIL/ SEDIMENT
BN	1,2,4-Trichlorobenzene	39-98	38-107
BN	Acenaphthene	46-118	31-137
BN	2,4-Dinitrotoluene	24-96	28-89
BN	Pyrene	26-127	35-142
BN	N-Nitroso-Di-n-Prophylamine	41-116	41-126
BN	1,4-Dichlorobenzene	36-97	28-104
Acid	Pentachlorophenol	9-103	17-104
Acid	Phenol	12-89	26-90
Acid	2-Chlorophenol	27-132	25-102
Acid	4-Chloro-3-Methylphenol	23-97	26-103
Acid	4-Nitrophenol	10-80	11-114

8.4 Lab Control Sample

8.4.1 A laboratory control sample is extracted and analyzed routinely with each extracted batch. Calculated concentrations are compared with the amount added and results are used for in house monitoring of extraction and analytical processes. Results of the LCS need not be reported in a CLP data package, but may be required in other types of data packages.

8.5 Internal Standard Recoveries and Retention times - when internal standard recoveries (-50 to +100%) or retention time requirements, (0.06 RRT) are not satisfied, sample is reinjected and reanalyses results are submitted if they are acceptable. If both analyses are out of criteria, then both results are submitted.

8.6 All extracts must be analyzed within 30 days after completion of extraction.

8.7 Dilutions are performed on samples when the concentration of target analytes exceed the calibration range. Additional IS must be added to the diluted extract to maintain the required IS

concentration. Surrogate recoveries (if possible) are not required to fall within suggested range.

9.0 REFERENCES

9.1 Test Methods for Evaluating Solid Waste Physical/Chemical Methods, SW-846, 3rd Edition

TABLE 1

Target Compound List (TCL) and
Contract Required Quantitation Limits (CRQL)*

Semivolatiles	CAS Number	Quantitation Limits** Water ug/L	Low Soil/Sediment[b] ug/Kg
Phenol	108-95-2	10	330
bis (2-Chloroethyl) ether	111-44-4	10	330
2-Chlorophenol	95-57-8	10	330
1,3-Dichlorobenzene	541-73-1	10	330
1,4-Dichlorobenzene	106-46-7	10	330
Benzyl alcohol	100-51-6	10	330
1,2-Dichlorobenzene	95-50-1	10	330
2-Methylphenol	95-48-7	10	330
bis (2-Chloroisopropyl) ether	108-60-1	10	330
4-Methylphenol	106-44-5	10	330
N-Nitroso-di-n-dipropylamine	621-64-7	10	330
Hexachloroethane	67-72-1	10	330
Nitrobenzene	98-95-3	10	330
Isophorone	78-59-1	10	330
2-Nitrophenol	88-75-5	10	330
2,4-Dimethylphenol	105-67-9	10	330
Benzoic acid	65-85-0	50	1600
bis (2-Chloroethoxy) methane	111-91-1	10	330
2,4-Dichlorophenol	120-83-2	10	330
1,2,4-Trichlorobenzene	120-82-1	10	330
Naphthalene	91-20-3	10	330
4-Chloroaniline	106-47-8	10	330
Hexachlorobutadiene	87-68-3	10	330
4-Chloro-3-methylphenol (para-chloro-meta-cresol)	59-50-7	10	330
2-Methylnaphthalene	91-57-6	10	330
Hexachlorocyclopentadiene	77-47-4	10	330
2,4,6-Trichlorophenol	88-06-2	10	330
2,4,5-Trichlorophenol	95-95-4	50	1600

TABLE 1 (Cont)

Target Compound List (TCL) and
Contract Required Quantitation Limits (CRQL)*

Semivolatiles	CAS Number	Quantitation Limits** Water ug/L	Low Soil/Sediment[b] ug/Kg
2-Chloronaphthalene	91-58-7	10	330
2-Nitroaniline	88-74-4	50	1600
Dimethylphthalate	131-11-3	10	330
Acenaphthylene	208-96-8	10	330
2,6-Dinitrotoluene	606-20-2	10	330
3-Nitroaniline	99-09-2	50	1600
Acenaphthene	83-32-9	10	330
2,4-Dinitrophenol	51-28-5	50	1600
4-Nitrophenol	100-02-7	50	1600
Dibenzofuran	132-64-9	10	330
2,4-Dinitrotoluene	121-14-2	10	330
Diethylphthalate	84-66-2	10	330
4-Chlorophenyl-phenyl ether	7005-72-3	10	330
Fluorene	86-73-7	10	330
4-Nitroaniline	100-01-6	50	1600
4,6-Dinitro-2-methylphenol	534-52-1	50	1600
N-nitrosodiphenylamine	86-30-6	10	330
4-Bromophenyl-phenylether	101-55-3	10	330
Hexachlorobenzene	118-74-1	10	330
Pentachlorophenol	87-86-5	50	1600
Phenanthrene	85-01-8	10	330
Anthracene	120-12-7	10	330
Di-n-butylphthalate	84-74-2	10	330
Fluoranthene	206-44-0	10	330
Pyrene	129-00-0	10	330
Butylbenzylphthalate	85-68-7	10	330
3,3'-Dichlorobenzidine	91-94-1	20	660

TABLE 1 (Cont)

Target Compound List (TCL) and
Contract Required Quantitation Limits (CRQL)*

Semivolatiles	CAS Number	Quantitation Limits** Water ug/L	Low Soil/Sediment[b] ug/Kg
Benzo(a)anthracene	56-55-3	10	330
Chrysene	218-01-9	10	330
bis (2-Ethylhexyl) phthalate	117-81-7	10	330
Di-n-octylphthalate	117-84-0	10	330
Benzo(b)fluoranthene	205-99-2	10	330
Benzo(k)fluoranthene	207-08-9	10	330
Benzo(a)pyrene	50-32-8	10	330
Indeno (1,2,3-cd) pyrene	193-39-5	10	330
Dibenz(a,h)anthracene	53-70-3	10	330
Benzo(g,h,i)perylene	191-24-2	10	330

[b] Medium Soil/Sediment Contract Required Quantitation Limits (CRQL) for Semivolatile TCL Compounds are 60 times the individual Low Soil/Sediment CRQL.

* Specific quantitation limits are highly matrix dependent. The quantitation limits listed herein are provided for guidance and may not always be achievable.

**Quantitation limits listed for soil/sediment are based on wet weight. The quantitation limits calculated by the laboratory for soil/sediment. Calculated on dry weight basis as required by the contract, will be higher.

TABLE 2

Appendix IX Compounds

1. Acetophenone
2. 2-Acetylaminofluorene
3. 4-Aminobiphenyl
4. Aniline
5. Chlorobenzilate
6. 4-Chlorophenyl phenyl ether
7. m-Cresol
8. Dimethoate
9. 4-Dimethylaminoazobenzene
10. 7,12-Dimethylbenz(a)anthracene
11. 3,3'-Dimethylbenzidine
12. a,a-Dimethylphenethylamine
13. 1,3-Dinitrobenzene
14. Diphenylamine
15. 1,4-Dioxane
16. Famphur
17. Hexachloropropene
18. Isodrin
19. Isosafrole(cis)
20. Kepone
21. Methapyrilene hydrochloride
22. 3-Methylcholanthrene
23. Methyl methane sulfonate
24. 1,4-Naphthoquinone
25. 1-Naphthylamine
26. 2-Naphthylamine
27. 4-Nitroquinoline-1-oxide
28. N-Nitrosodi-n-butylamine
29. N-Nitrosodiethylamine
30. N-Nitrosodimethylamine
31. N-Nitrosomethylethylamine
32. N-Nitrosomorpholine
33. N-Nitrosopiperidine
34. N-Nitrosopyrrolidine
35. 5-Nitro-o-toluidine
36. Pentachlorobenzene
37. Pentachloronitrobenzene
38. Phenacetin
39. 1,4-Phenylenediamine
40. Phorate
41. 2-Picoline
42. Pronamide
43. Pyridine
44. Safrole
45. 1,2,4,5-Tetrachlorobenzene
46. 2,3,4,6-Tetrachlorophenol
47. Thionazin
48. o-Toluidine
49. O,O,O-Triethylphophorothioate
50. sym-Trinitrobenzene
51. Methyl methacrylate
52. Ethyl methacrylate
53. Ethyl methane sulfonate
54. o-Anisidine
55. p-Cresidine
56. 5-Chloro-2-methylaniline
57. Phthalic anlydride
58. 2,4-Diaminotoluene
59. 1-Chloronaphthalene
60. Diallate
61. Disulfoton
62. Methylparathion
63. Ethylparathion
64. 4-Aminoazobenzene
65. 4,4-Oxydianiline
66. 3,3-Dimethoxybenzidine
67. Tetraethyldithiopyrophosphate

METHOD 8270B
(Continued)

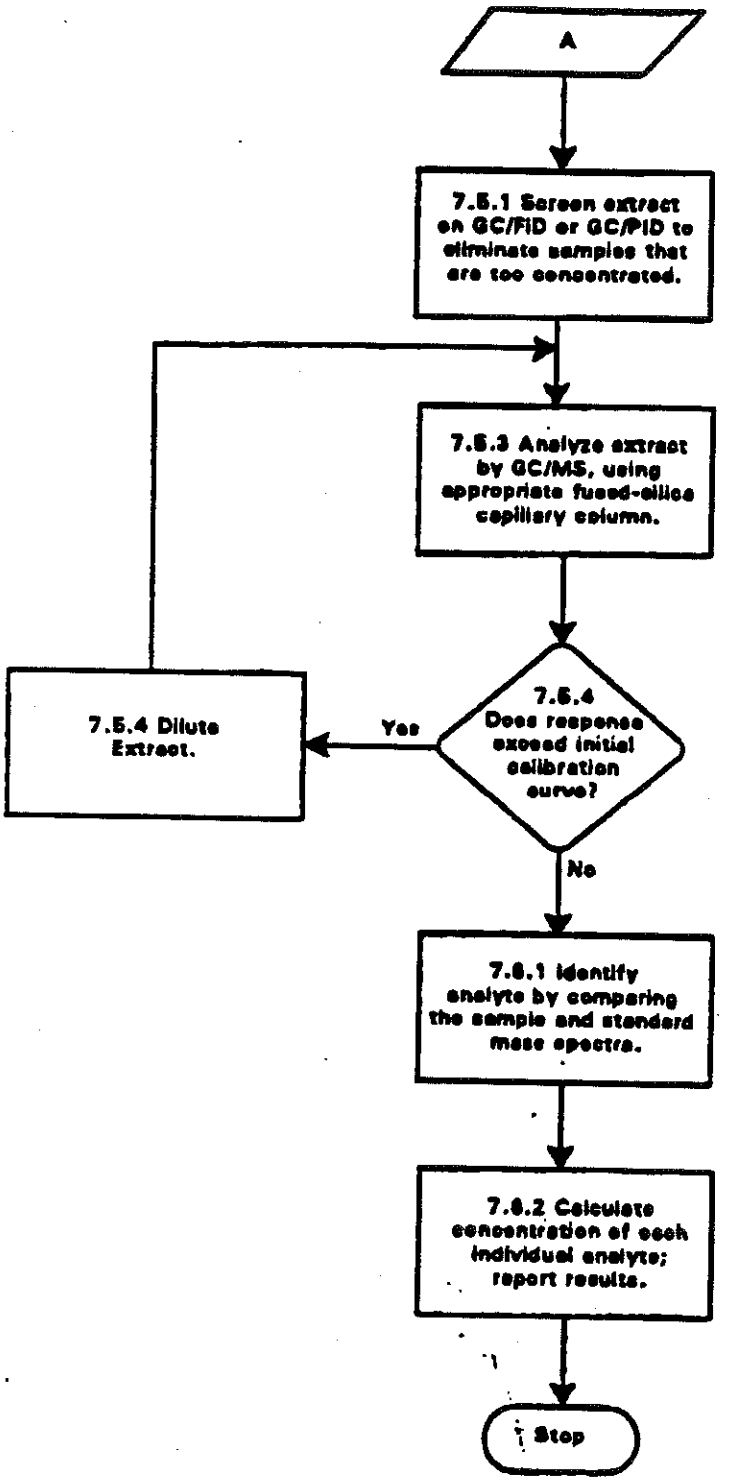

METHOD 8270B
SEMIVOLATILE ORGANIC COMPOUNDS BY GAS CHROMATOGRAPHY/MASS SPECTROMETRY (GC/MS): CAPILLARY COLUMN TECHNIQUE

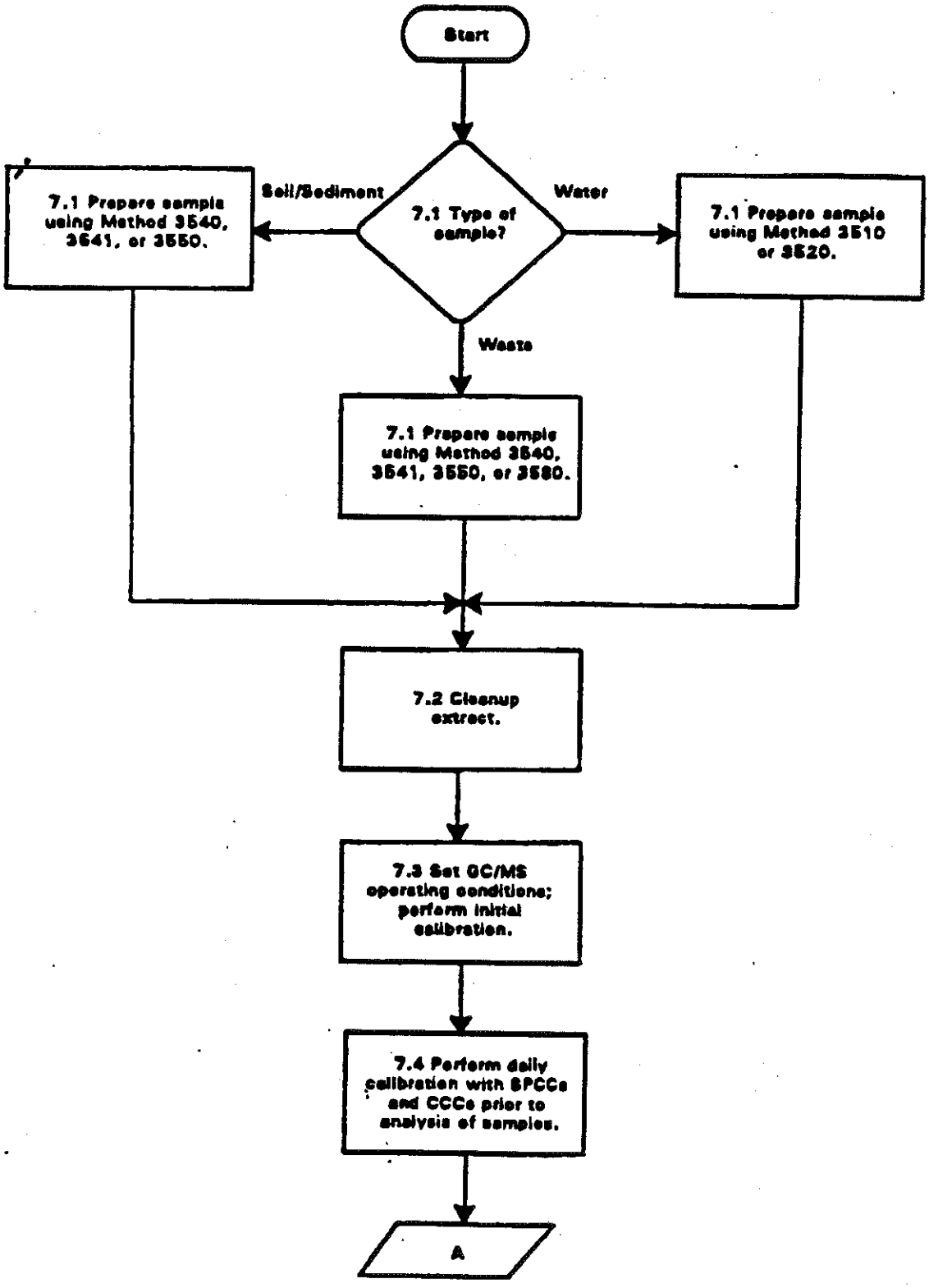

Effective Date: July 1995
Version Number: 3
Initiated By :
Approved By :

SOP No.: 12.15

Title : Method 3520B, Continuous Liquid-Liquid Extraction for Pesticide/PCBs

1.0 SCOPE AND APPLICATION

1.1 This method is applicable to the isolation and concentration of water-insoluble and slightly water-soluble organics such as organochlorine pesticides and PCBs. Extracts produced by this method may be analyzed by Methods 8080 or 608.

1.2 This method also describes concentration techniques suitable for preparing the extract for the appropriate method.

2.0 SUMMARY OF METHOD

2.1 A measured volume of sample, usually 1 liter, is placed into a continuous liquid-liquid extractor, adjusted, if necessary, to a specific pH and extracted with organic solvent for 18-24 hours. The extract is dried, concentrated and exchanged into a solvent compatible with the step being employed.

3.0 INTERFERENCES

3.1 Solvents, reagents, glassware, and other sample processing hardware may yield artifact and/or interferences to sample analysis. All materials must be demonstrated to be free from interferences under the conditions of the analysis by analyzing method blanks.

4.0 APPARATUS AND MATERIALS

4.1 Continuous Liquid-Liquid Extractor (Equipped with joints and snapring clips).

4.2 Drying Column (A glass funnel with pyrex glass wool at the neck of the funnel, half filled with dry Na_2SO_4).

4.3 Kuderna-Danish (K-D) Apparatus

4.3.1 Concentrator tube: 10 ml, graduated (Kontes K-570050-1025 or equivalent). A ground-glass stopper is used to prevent evaporation of extracts.

4.3.2 Evaporator flask: 500-ml (Kontes K-570001-500 or equivalent). Attach to concentrator tube with springs.

4.3.3 Snyder column: Three-ball macro (Kontes K-503000-0121 or equivalent).

4.4 Solvent extracted Boiling Chips, approximately 10/40 mesh (silicon carbide or equivalent).

4.5 Heated water Bath, with concentric ring cover, capable of temperature control (± 5°C). The bath should be used in a hood.

4.6 Glass vials, 2-ml capacity, with Teflon-lined screw cap.

4.7 pH Indicator Paper covering pH 2 to pH 12.

4.8 Rheostat controlled Heating Mantle.

4.9 1.0 ml Gas-Tight Luer-Lok Syringe.

4.10 One (1) Liter Class A Graduated Cylinder.

4.11 Pyrex Glass Wool.

4.12 Activity III neutral aluminum (Al_2O_3-H_2Ox) prepared by adding 8% (v/w) deionized water to Super I Woelm neutral aluminum in a 150 ml Erlenmeyor flask. Shake the flask using a wrist action shaker for a least 2 hours.

4.13 Large disposable glass pipets.

5.0 REAGENTS

5.1 Reagent Water (water in which an interferant is not observed at the method detection limit of the compounds of interest).

5.2 Sodium Hydroxide Solution, 10N.

(ACS) Dissolve 40 g NaOH in reagent water and dilute to 100 ml.

5.3 Sodium Sulfate.

(ACS) Granular, Anhydrous (purified by heating at 400°C for 4 hours in a shallow tray).

5.4 Sulfuric Acid Solution (1:1).

Slowly add 50-ml of H_2SO_4 (sp. gr. 1.84) to 50 ml of reagent water.

5.5 Methylene Chloride (B & J GC2 grade or equivalent).

5.6 Hexane (Pesticide grade).

6.0 PROCEDURE

6.1 Place a few boiling stones in a 500 ml collecting flask and assemble continuous extractor.

6.2 Add 500 ml of methylene chloride to the extraction.

6.3 Using a Class A graduated cylinder, measure out 1 liter of sample and transfer it to the continuous extraction. Add 1.0 ml of surrogate spiking solution. Check the pH of the sample using wide range pH paper and adjust the pH to 7.0 using 1:1 H_2SO_4 or 10N NaOH. Use 1.0 liter of deionized water to another extraction for the method blank preparation and analysis.

6.4 For the sample in each analytical batch selected for spiking, measure one additional 1.0 liter aliquots. Add 1.0 ml of the matrix spiking standard.

6.5 Add an aliquot of 0.5 ml of Acetone to the extract in the concentrator tube.

6.6 Add sufficient methylene chloride to the extractor to ensure proper operation and extraction for 18 hours. Adjust the heating mantle to approximately seventy (70) degrees centigrade and allow to extract for 18 hours.

6.7 Allow to cool, then detach and label the boiling flask. The extract is then ready to be dried and concentrated.

6.8 Assemble a Kuderna-Danish (K-D) Concentrator by attaching a 10-ml concentrator tube to a 500-ml evaporation flask.

6.9 Dry the extract by passing it through a drying column containing about 10 cm anhydrous sodium sulfate. Collect the dried extract in a K-D concentrator. Rinse the flask which contained the solvent extract with 20-30 ml of methylene chloride and add to the column to complete the quantitative transfer.

6.10 Add one or two clean boiling chips to the flask and attach a three ball Snyder Column. Pre-wet the Snyder Column by adding approximately 1 ml of methylene chloride to the top of the column. Place the K-D apparatus on a hot water bath (85-95°C) until the concentrator tube is partially immersed in the hot water and the entire lower rounded surface of the flask is bathed with hot vapor. Adjust the vertical position of the apparatus and the water temperature, as required, to complete the concentration.

When the apparent volume of liquid reaches about 10 ml, remove the K-D apparatus from the water bath and perform a solvent exchange by adding 15 ml of hexane through the top of Snyder column. Continue extraction in the water bath until the volume of extract reaches approximately 7 ml.

6.11 Prepare the micro alumina column by plugging a large disposable glass pipet with a small piece of pyrex wool. Add about 1.5 inches of deactivated alumina to the column. Tap the column to settle the alumina.

6.12 Transfer extract to micro alumina column and collect eluent in a 12 ml sample vial. Rinse alumina continuously with about 10 ml of hexane and collect all eluate until 10 ml of extract is collected in sample vial. It is important to note that one should not allow alumina to go to dryness when the clean-up procedure is being performed, so as to prevent formation of channels in packings.

6.13 Disassemble K-D Apparatus and place the concentrator tube in a warm water bath (35°C) and evaporate the solvent volume to 0.5 ml using a gentle stream of clean, dry nitrogen (filtered through a column of activated carbon).

7.0 QUALITY CONTROL

7.1 Method Blank

7.1.1 The method blank is a volume of deionized, laboratory water carried through the entire extraction. The method blank volume must be equal to 1.0 lit or the sample volumes being extracted.

7.1.2 Frequency of Method Blanks

Method blank extraction must be performed per each batch of 20 samples or less (counting MS/MSD as samples).

7.2 Matrix Spike/Matrix Spike Duplicate

7.2.1 MS/MSD Frequency of Extraction

Matrix spike and matrix spike duplicate extraction must be performed per each batch of 20 samples or less. If the batch of samples are received periodically, then MS/MSD are extracted every 14 days.

7.3 Matrix Spiking Solutions

7.3.1 Method 608 matrix spikes

1.0ml of the following concentrations is added:

Aldrin	1 µg/mL	Dieldrin	2 µg/mL
a-BHC	1 µg/mL	Endosulfan I	2 µg/mL
b-BHC	1 µg/mL	Endosulfan II	2 µg/mL
g-BHC	1 µg/mL	Endosulfan sulfate	6 µg/mL
d-BHC	1 µg/mL	Endrin	2 µg/mL
4,4'-DDD	6 µg/mL	Endrin aldehyde	6 µg/mL
4,4'-DDE	2 µg/mL	Heptachlor	1 µg/mL
4,4'-DDT	6 µg/mL	Heptachlor epoxide	1 µg/mL

7.3.2 Method 8080 matrix spikes

Matrix spike is prepared in methanol and 1.0ml is added to the designated samples. The mixture contains the following compounds at the given concentrations:

g-BHC	0.2ug/ml
Heptachlor	0.2ug/ml
Aldrin	0.2ug/ml
Dieldrin	0.5ug/ml
Endrin	0.5ug/ml
4,4'-DDT	0.5ug/ml

LCS spiking levels are the same as those used to spike samples.

7.4 Surrogate Spike (SS)

Each sample, matrix spike, and blank are spiked with surrogate compounds prior to extraction. The concentration in the following table exhibits the concentration in the spiking solution.

Compounds	Concentration Added
Decachlorobiphenyl (PCBs only)	1.0ml of 2.0ug/ml
Dibutylchlordate (Pest, PCBs)	1.0ml of 1.0ug/ml

7.5 Lab Control Spike (LCS)

Blank spikes are extracted at the same frequency as matrix spikes using deionized water as the matrix.

7.6 PCBs Spike

When PCBs are only needed, follow the same extraction procedure as Pest/PCBs. Spike sample and the related QC with 1.0ml of 2.0ug/ml Decachlorobiphenyl (DCB). For matrix spike and LCS QC runs use 1.0ml of AR1260 and AR1016 spiking solution of the concentration of 1.0 and 0.5ug/ml respectively.

8.0 SAFETY

8.1 Safety glasses, lab coat, and gloves should be worn at all times during extraction.

8.2 Label reagents, spikes, surrogate solutions by identifying the solution, concentration, date, chemist's initials, and shelf life.

8.3 Waste Disposal

8.3.1 Chlorinated solvent waste should be put into a polyethylene safety can designated for methylene chloride. This will be disposed of by the hazardous waste coordinator.

8.3.2 Water waste can be poured down the drain after neutralizing it using H_2SO_4 or NaOH depending upon the pH of the waste.

9.0 REFERENCES

9.1 Test Methods For Evaluating Solid Waste, Physical/Chemical Methods, SW-846, 3rd Edition.

METHOD 3520B
CONTINUOUS LIQUID-LIQUID EXTRACTION

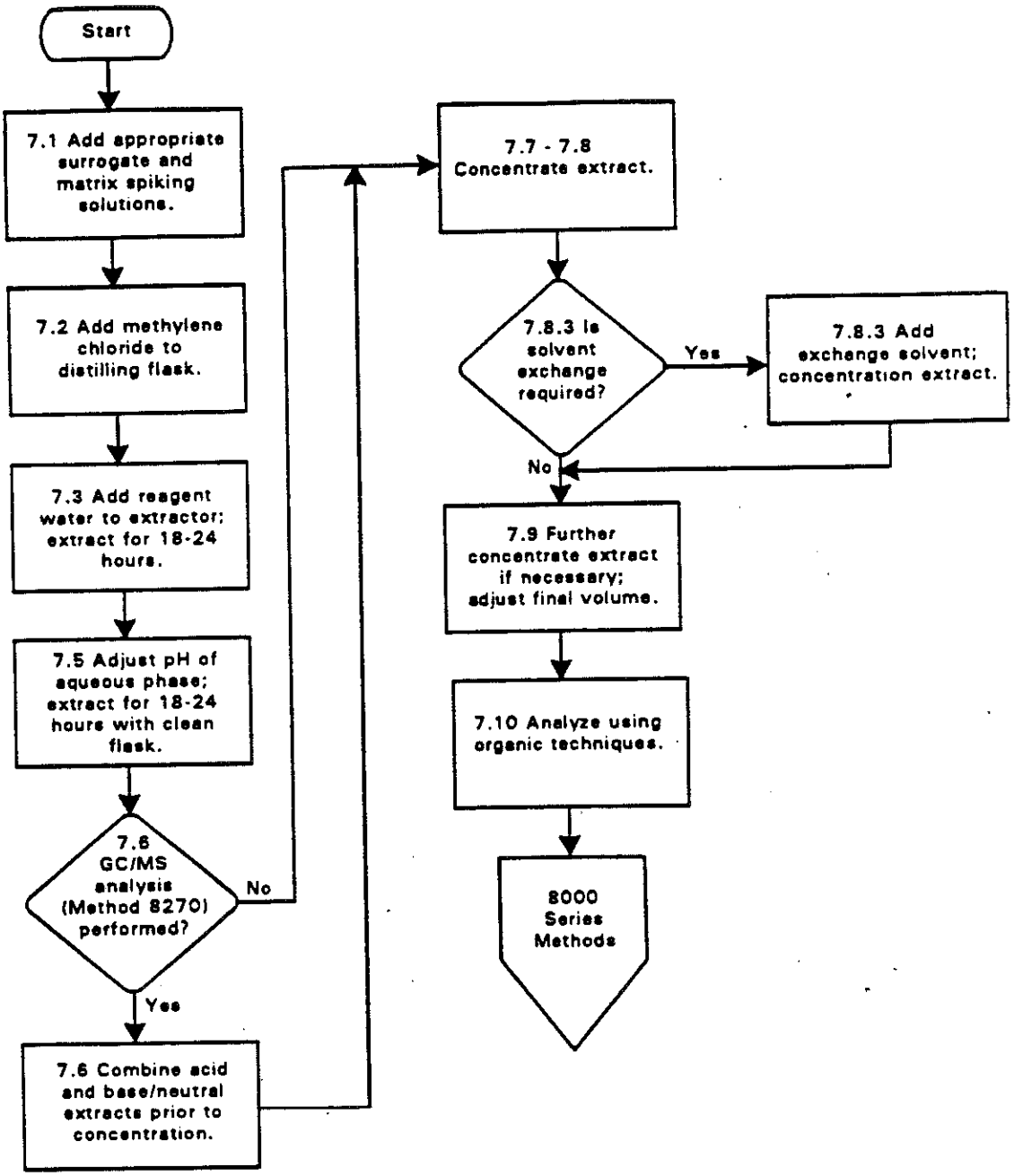

GP ENVIRONMENTAL SERVICES

Effective Date: July 1995
Version Number: 2
Initiated By : M. [illegible]
Approved By : W. [illegible]

SOP No.: 12.16

Title : Soil Extraction for Pesticides/PCBs Compounds by Method 3550A (Sonicatin Extraction).

1.0 APPLICATION AND SCOPE

1.1 This method is a procedure for extracting organochlorine pesticide and PCB compounds from solids such as soils, sludges, and wastes. Extracts are suitable for analysis by method 8080.

1.2 Method 3550A describes both high level and low level extraction procedures. This SOP is based on the low level version of method 3550.

2.0 SUMMARY OF METHOD

2.1 A 30g sample is mixed with anhydrous sodium sulfate to form a free-flowing powder. Mixture is extracted with solvent three times using sonication. The extract is separated from the sample by filtration. The extract is ready for cleanup following concentration.

3.0 INTERFERENCES

3.1 Solvents, reagents, glassware, and other sample processing hardware may yield artifacts and/or interferences to sample analysis. These materials must be demonstrated to be free from interferences under the conditions of the analysis by analyzing method blanks.

4.0 APPARATUS AND MATERIALS

4.1 Mortar Model 155 Grinder, Fisher Scientific Company, or an equivalent brand and model.

4.2 Ultrasonic cell disrupter, Heat Systems - Ultra Sonic, Inc., Model W-385 (475 watt) Sonicator or equivalent (power wattage must be a minimum of 375 with pulsing capability and No. 200 1/2" Tapped Disrupter Horn) plus No. 207 3/4" Tapped Disrupter Horn, and No. 419 1/8" Standard Tapped Microtip Probe (where applicable).

4.3 Apparatus for Determining Percent Moisture

- Oven: drying
- Desiccator
- Crucibles: Porcelain

4.4 Pasteur Glass Pipets, Disposable, 1-ml

4.5 Beakers, 400-ml

4.6 Filtration Apparatus

- Conical funnel
- Filter paper: Whatman No. 41 or equivalent

4.7 Kuderna-Danish (K-D) Apparatus

4.7.1 Concentrator tube: 10-ml graduated (Kontes K-570050-1025 or equivalent).

4.7.2 Evaporator Flask: 500-ml (Kontes K-570001-0500 or equivalent).

4.7.3 Snyder Column: Three-ball macro (Kontes K-503000-0121 or equivalent).

4.8 Solvent extracted Boiling Chips, approximately 10/40 mesh (Silicon Carbide or equivalent)

4.9 Heated Water Bath, with concentric ring cover, capable of temperature control (± 5°C). The bath should be used in a hood.

4.10 Top-loading Analytical Balance, capable of accurately weighing 0.01 grams.

4.11 12 ml Vials and Caps

4.12 Glass Funnel

4.13 Nitrogen evaporation device equipped with a water bath that can be maintained at 35-40°C.

4.14 Spatula, Stainless steel or Teflon

4.15 Syringe, 1-ml

4.16 Large disposable glass pipets

5.0 REAGENTS

5.1 Sodium Sulfate; Anhydrous and reagent grade, heated at 400°C for 4 hours, cooled in a desiccator, and stored in a glass bottle. Baker anhydrous powder, catalog # 73898, or equivalent.

5.2 Methylene chloride: acetone (1:1, V:V)

5.3 Methylene chloride (B&J GC2 grade or equivalent)

5.4 Hexane (pesticide quality or equivalent).

5.5 Activity III Neutral Alumina (Al_2O_3 - H_2O_x)

5.5.1 Prepared by adding 8% (v/w) deionized water to Super I Woelm neutral alumina in a 150 ml E-flask. Shake in a wrist shaker for at least two hours.

6.0 PROCEDURE

6.1 Sample Handling and Storage

6.1.1 Samples must be refrigerated at 4°C upon arrival. Holding time for soil samples is 14 days from the collection date. Samples must be brought to room temp before extraction begins. Spare containers (if provided) should be used for matrix spike and re-extractions (if needed).

6.1.2 Sediment/soil samples: Decant and discard any water layer on a sediment sample. Mix sample thoroughly, especially composited samples. Discard any foreign objects such as sticks, leaves, and rocks.

6.2 Determination of Percent Moisture

In most cases sample results are desired based on a dry-weight basis. When such data is desired, a portion of sample for moisture determination should be weighed simultaneously with the portion used for the analytical determination.

Immediately after weighing the sample for extraction, weigh 5-10 g of the sample into a tared crucible. Determine the percent moisture by drying overnight at 105°C. Allow to cool in a desicator before weighing.

$$\frac{\text{g of Sample - g of dry Sample}}{\text{g of Sample}} \times 100 = \text{\% moisture}$$

6.3 Determination of pH

Transfer 50 g of sample to a 100-ml beaker. Add 50 ml of water and stir for 1 hour. Determine the pH of sample with pH paper. Discard this portion of sample. A lesser amount of sample may be used if 50 g is not available. In this case, adjust the amount of water proportionally also.

6.4 The following step should be performed to avoid loss of the more volatile extractables. Weigh approximately 30 g of sample into a 200-ml beaker. Record the weight to be nearest 0.01 g. Non-porous or wet samples (gummy or clay type) lacking a free-flowing sandy texture must be mixed with 60 g of anhydrous sodium sulfate using a spatula. The sample should be free-flowing at this point. Add 1-ml of surrogate standards to all samples, spikes, and blanks. For the sample in each analytical batch selected for spiking, add 1.0 ml of the matrix spiking standard. Then immediately add 100-ml of 1:1 methylene-chloride: acetone.

6.5 Place the bottom surface of the tip of the #207 3/4" disrupter horn about 1/2" below the surface of the solvent, but above the sediment layer.

6.6 Sonicate for 3 minutes with the output control knob set at 10 and the mode switch set on pulse and the percent-duty cycle knob set at 8-10. DO <u>NOT</u> use a microtip probe.

6.7 Decant and filter extracts through Whatman No. 41 filter paper using filtration or centrifuge and decant extraction solvent.

6.8 Repeat the extraction two more times with two additional 100-ml portions of solvent. Decant off the extraction solvent after each sonication. On the final sonication, pour the entire sample into the conical funnel and rinse with extraction solvent.

6.9 Assemble a Kuderna-Danish (K-D) Concentrator by attaching a 10-ml concentrator tube to a 500-ml evaporative flask.

6.10 Dry the extract by passing it through a drying funnel filled with anhydrous Sodium Sulfate. Collect the dried extract in a K-D Concentrator. Wash the extractor flask and Sodium Sulfate Column with 100-125 ml of extraction solvent to complete the quantitative transfer.

6.11 Add one or two clean boiling chips to the evaporative flask and attach a three-ball Snyder Column. Pre-wet the Snyder Column by adding about 1-ml methylene chloride to the top. Place the K-D apparatus on a hot water bath (80-85°C) so that the concentrator tube is partially immersed in the hot water and the entire lower rounded surface of the flask is bathed with hot vapor. Adjust the

vertical position of the apparatus and the water temperature, as required, to complete the concentration in 10-15 minutes. At the proper rate of distillation the balls of the column will actively chatter but the chambers will not flood with condensed solvent. When the apparent volume of liquid reaches 10 ml, remove the K-D apparatus and add 15 ml of Hexane through the top of Snyder column and continue concentration until liquid volume reaches about 7 ml.

6.12 Remove the Snyder Column and rinse the flask and its lower joints into the concentrator tube with 1-2 ml of Hexane. The extract may be further concentrated and adjusted to 1.0 ml with the solvent. Add 0.5 ml of acetone. Plug a large disposable glass pipet with small a piece of pyrex glass wool. Add about 1.5 inches of deactivated alumina to the column. Tap the column to settle the alumina.

6.13 Transfer the extract to the micro alumina column and collect the eluent in a 12 ml vial. Rinse the alumina continuously with about 10 ml of Hexane and collect all eluent until 10 ml of extract have been collected. Do not allow the alumina to go dry.

7.0. QUALITY CONTROL

7.1 Method Blank

7.1.1 A method blank is purified solid matrix (NA_2SO_4) for soil samples, carried through the entire extraction. The method blank weight must be approximately equal to the sample weights being processed.

Method blank extraction must be performed per each batch of 20 samples or less (counting MS/MSD as samples).

7.2 Matrix Spike/Matrix Spike Duplicate

7.2.1 Matrix Spike/Matrix Spike Duplicate frequency of extraction

Matrix spike and matrix spike duplicate extraction must be performed per each batch of 20 samples or less. If the batch of samples are received periodically, then MS/MSD are extracted every 14 days.

7.3 Matrix Spiking Solution is prepared in methanol and 1.0ml is added to the designated samples. The mixture contains the following compounds at the given concentrations:

Analyte	Conc.	Analyte	Conc.
g-BHC	0.2ppm (μg/ml)	4,4'-DDT	0.5ppm (μg/ml)
Heptachlor	0.2ppm (μg/ml)	Endrin	0.5ppm (μg/ml)
Aldrin	0.2ppm (μg/ml)	Dieldrin	0.5ppm (μg/ml)

7.4 Surrogate Spike

Each sample, matrix spike, matrix spike duplicate and blank is spiked with surrogate compounds prior to extraction. The concentration in the following table exhibits the concentration in the spiking solution.

Compounds	Concentration Added
Decachlorobiphenyl (PCBs only)	1.0ml of 2.0ug/ml
Dibutylchlorendate (Pest/PCBs)	1.0ml of 1.0ug/ml

7.5 Lab Control Spikes (LCS)

Blank spikes are extracted at the same frequency as matrix spikes using Na_2SO_4 as the matrix. LCS spiking levels are the same as matrix spike concentrations.

8.0 SAFETY

8.1 Safety glasses, lab coat, and gloves should be worn at all times during extraction.

8.2 Label reagents, spikes, surrogate solutions with solution type, concentration, date, chemist's initials and shelf life.

9.0 REFERENCES

9.1 Test Methods for Evaluating Solid Waste, Physical/Chemical Methods, SW-846, 3rd Edition.

METHOD 3550A
ULTRASONIC EXTRACTION

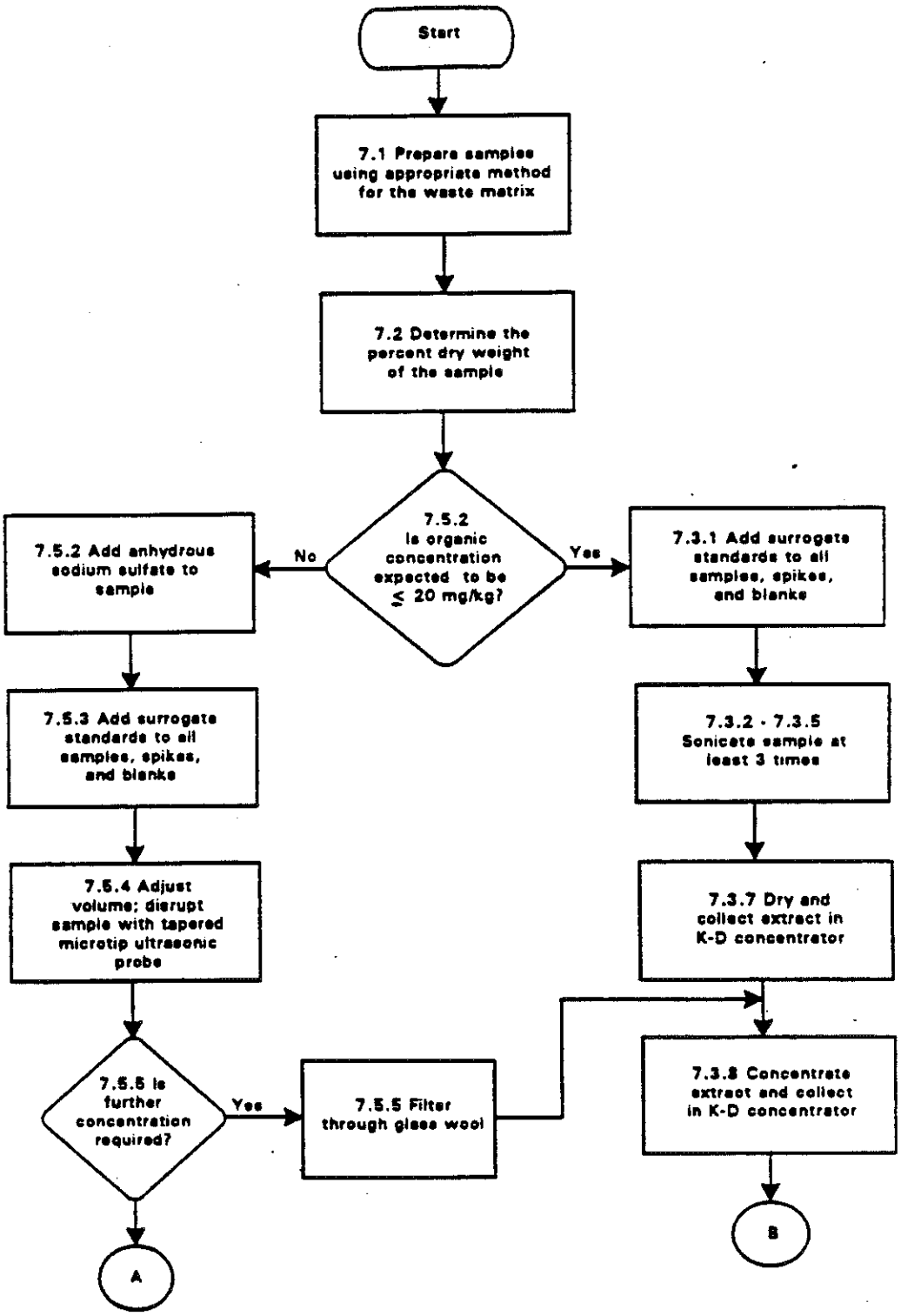

METHOD 3550A
continued

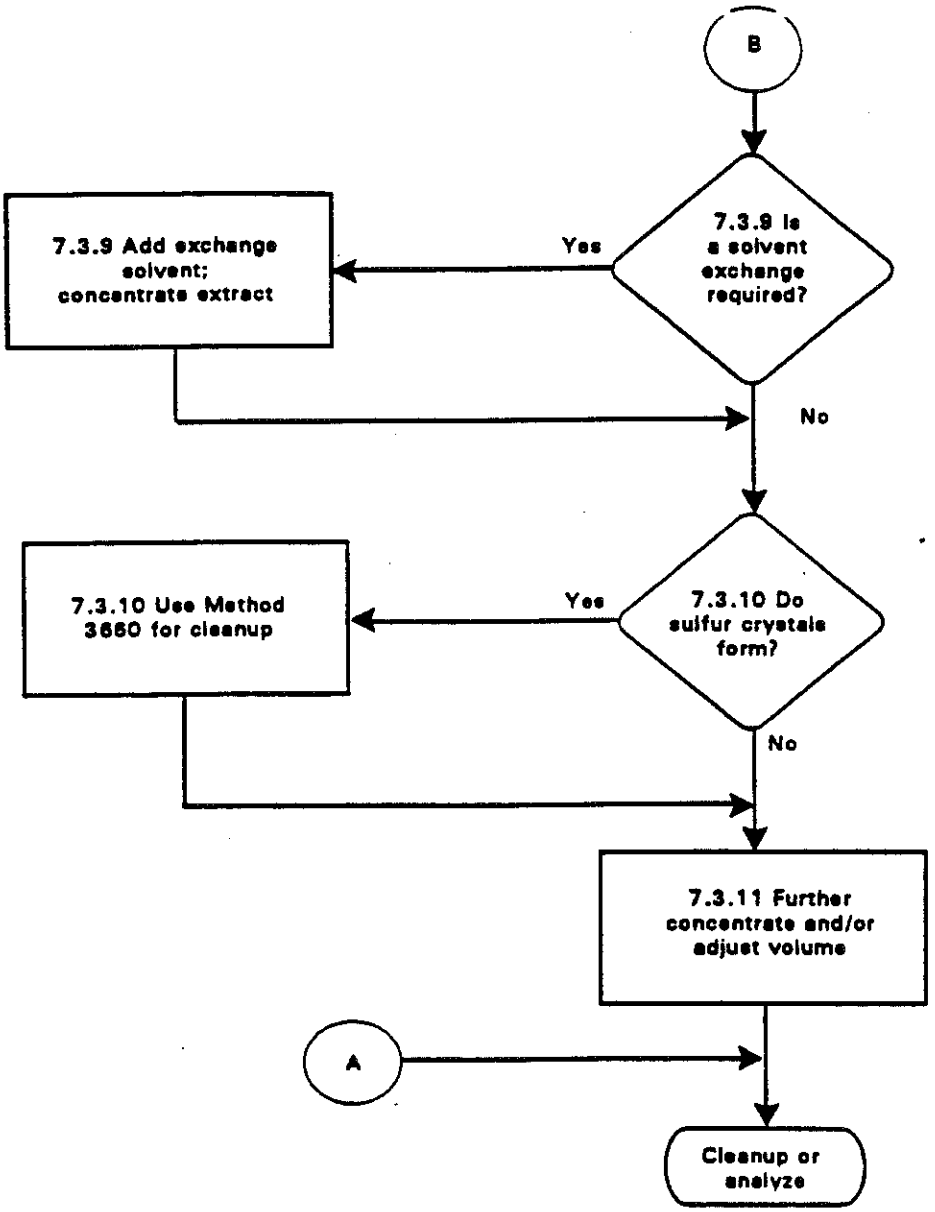

Effective Date: July 1995
Version Number: 2
Initiated By :
Approved By :

SOP No.: 13.0

Title : SOP for Method 8080A
Organochlorine Pesticides and PCBs

1.0 SCOPE AND APPLICATION

1.1 Method 8080A is used to determine the concentration of various organochlorine pesticides and polychlorinated biphenyls (PCBs). Table 1 indicates compounds that may be determined by this method.

TABLE 1

NAME
4,4'-DDD
4,4'-DDE
4,4'-DDT
Aldrin
Aroclor 1016
Aroclor 1221
Aroclor 1232
Aroclor 1242
Aroclor 1248
Aroclor 1254
Aroclor 1260
Chlordane
Dieldrin
Endosulfan I
Endosulfan II
Endosulfan Sulfate
Endrin
Endrin Aldehyde
Heptachlor
Heptachlor epoxide
Methoxychlor
Toxaphene
alpha-BHC
beta-BHC
delta-BHC
gamma-BHC (Lindane)

Additional compounds may be determined by this method. These compounds are suggested by Method 8081 and/or listed under Appendix IX compound list. Table 2 indicates compounds that can be analyzed by this method.

Table 2

Compound Name	CAS Registry No.
Chlorobenzilate	510-15-6
DBCP	96-12-8
Diallate	2303-16-4
Isodrin	465-73-6
Kepone	143-50-0
Alachlor	15972-60-8
Chorothalonil	1897-45-6
DCPA	1861-32-1
Mirex	2385-85-5
Propachlor	1918-16-17
Trans-Nonachlor	39765-80-5
Trifluralin	1582-09-8

2.0 SUMMARY OF METHOD

2.1 Method 8080A provides gas chromatographic conditions for the detection of ppb levels of certain organochlorine pesticides and PCBs. Prior to the use of this method, appropriate sample extraction techniques must be used.

3.0 INTERFERENCES

3.1 Interferences by pthalate esters can pose a major problem in pesticide determinations when using the electron capture detector. These compounds generally appear in the chromatogram as large-eluting peaks, especially in the 15% and 50% fraction from cleanups. Interferences from pthalates can best be minimized by avoiding contact with any plastic materials.

4.0 APPARATUS AND MATERIALS

4.1 Gas Chromatograph

Hewlette Packard GC Systems 5890 equipped with autosampler is used. Nelson or HP EnviroQuant software systems for data recording and processing is interfaced with the GC system.

4.2 Columns

4.2.1 Dual column connected with a "Y" connector to a single injection port is used. In this mode, material injected is split between the columns and detected by 2 separate ECD detectors.

4.2.2 Column 1: 30 meter, 0.53 I.D., 0.5 micron film thickness, Restek RTX-1701, fused silica column is used.

4.2.3 Column 2: 30 meter, 0.53 I.D., 0.5 micron film thickness, Restek RTX-5, fused silica column is used.

4.2.4 5 meter guard column (inert) is used at the "Y" connector.

4.3 GC Condition

4.3.1 The following GC parameters are implemented:

- Injection port temperature 265°C
- Detectors temperature 300°C
- A tri-ramp temperature program is used

1st Ramp:	
Initial temperature	150°C
Initial time	0.5 min
Rate	8°C/min
Final temperature	180°C
Final time	10 min

2nd Ramp:	
Initial temperature	180°C
Rate	8°C/min
Final temperature	210°C
Final time	10 min

3rd Ramp:	
Initial temperature	210°C
Rate	15°/min
Final temperature	270°C
Final time	8 min

- Equilibrium time 0.75 min
- Septum purge on
- Attenuation 0
- Signal rages 0
- Splitless purge 50ml/min
- Makeup gas 80ml/min

4.4 Gases

4.4.1 Helium ultrapure grade issued is used as a gas carrier at about 5 ml per min at 50° measured at the column end.

4.4.2 Make up gas is Argon/Methane (5% methane) and the flow rate is about 80 ± 5 ml per min for each detector.

5.0 CALIBRATION

5.1 Calibration standards at five concentration level, are prepared through dilution of the stock standards with hexane (refer to standard logbook). Five μl of each level is injected. Concentrations of the compounds are listed on Table 3.

TABLE 3

	Level 1 (ug/L)	Level 2 (ug/L)	Level 3 (ug/L)	Level 4 (ug/L)	Level 5 (ug/L)
4,4'-DDD	5	25	50	75	100
4,4'-DDE	5	25	50	75	100
4,4'-DDT	5	25	50	75	100
Aldrin	5	25	50	75	100
alpha-BHC	5	25	50	75	100
beta-BHC	5	25	50	75	100
Chlordane	100	250	500	1000	2000
Decachlorobiphenyl (PCB Surr)	25	62.5	125	187.5	250
delta-BHC	5	25	50	75	100
Dibutylchlorendate (Surrogate)	5	25	50	75	100
Dieldrin	5	25	50	75	100
Endosulfan I	5	25	50	75	100
Endosulfan II	5	25	50	75	100
Endosulfan Sulfate	5	25	50	75	100
Endrin	5	25	50	75	100
Endrin aldehyde	5	25	50	75	100
Endrin ketone	5	25	50	75	100
gamma-BHC (Lindane)	5	25	50	75	100
Heptachlor	5	25	50	75	100
Heptachlor epoxide	5	25	50	75	100
Methoxychlor	5	25	50	75	100
Toxaphene	100	250	500	1000	2000
AR1016	100	250	500	750	1000
AR1221	100	250	500	750	1000
AR1232	100	250	500	750	1000
AR1242	100	250	500	750	1000
AR1248	100	250	500	750	1000
AR1254	100	250	500	750	1000
AR1260	200	500	1000	1500	2000

5.2 Surrogate standard Decachlorobiphenyl is used in PCB's analyses. It is calculated at levels indicated in Table.

6.0 GC ANALYSIS

6.1 Retention time windows

6.1.1 Make 3 injections of all single component standard mixtures and multipeaks throughout the course of a 72-hour period. Calculate standard deviation of the three absolute retention times for each single component standard. For multiresponse products, choose one major peak from the cluster and calculate the standard deviation of the three retention times for that peak.

6.1.1.1 Plus or minus three times the standard deviation of the absolute retention times for each standard will be used to define retention time window. For multipeak products, primarily combination of chromatography pattern and retention times are used.

6.1.1.2 In those cases where the standard deviation for a particular standard is zero, substitute the standard deviation of a close eluting, similar compound to develop a valid retention time window.

6.1.1.3 When a new GC column is installed retention time window must be established.

6.2 Degradation of DDT and Endrin

6.2.1 Check for degradation problems by injecting a mid-level standard containing only 4,4'-DDT and endrin. Look for the degradation products of 4,4'-DDT (4,4'-DDE and 4,4'-DDD) and endrin (endrin ketone and endrin aldehyde). Degradation must be less than 20% before any sample analyzed.

$$\text{\% Breakdown for 4,4'-DDT} = \frac{\text{Total DDT degradation peak area (DDE + DDD)} \times 100}{\text{Total DDT peak area (DDT + DDE + DDD)}}$$

$$\text{\% Breakdown for Endrin} = \frac{\text{Total Endrin degradation peak area (endrin aldehyde + endrin ketone)} \times 100}{\text{Total Endrin peak area (endrin + endrin ketone + endrin aldehyde)}}$$

6.3 Calibration

6.3.1 Five level calibration is initially analyzed. Percent RSD (relative standard deviation) must be below 20% for 5 points. Same procedure must be applied for multiple peak compounds such as Toxaphene and PCBs.

6.3.2 Continuing calibration is analyzed at the beginning of each shift. Percent difference should be kept less than 15% for all compounds or another curve should be generated. A continuing (mid-level) calibration standard must also be injected at intervals not less than every 10 samples and at the end of the analysis sequence.

6.4 Sample Analysis

6.4.1 When all degradation and calibration requirements are met sample analysis may begin. After each batch of 10 runs degradation and linearity should be checked before any more samples analyzed.

6.4.2 Dilution must be made if the response exceed the linear range of the compounds.

6.4.3 Peak identification is based on detection on both columns. A daily retention time window is established for each analyte from section 5.1 as the midpoint of the window for that day. The daily retention time window equals the midpoint $\pm$ 3 times the standard deviation determined in section 5.1.

6.4.4 GCMS Confirmation is implemented if the concentration permits.

6.5 PCBs

Initially 5 levels of standards for each Aroclor are analyzed and calibration curves are established. When PCBs analysis is required, a continuing calibration is analyzed for Ar-1660. If PCBs are detected in the sample, patterns are compared with initial standards and corresponding PCBs are analyzed for fingerprint match and retention time comparison. Calculation is based on average area or peak height quantification of 5 representative peaks. When interferences are present, those peaks with less interferences may be chosen for quantification. Also fewer peaks (minimum of 3) may be used for quantification if there are considerable interferences.

6.6 Toxaphene and Chlordane

Approach similar to 6.5

6.7 Calculation

6.7.1 All quantifications are based on external standard calculations.

6.7.1.1 Calculation for calibration factor

$$\text{Calibration factor} = \frac{\text{Total Area of Peak*}}{\text{Mass injected (nonograms)}}$$

* for multipeak analytes use total area of all peaks used for quantitation

6.7.1.2 Percent Difference

$$\text{Percent difference} = \frac{R_1 - R_2}{R_1} \times 100$$

R_1 = Calibration factor from first analysis
R_2 = Calibration factor from succeeding analyses

6.7.1.3 The concentration of each analyte in the sample may be determined by calculating the amount of standard injected from the peak response, using the calibration curve or factor determined from 6.7.1.1.

$$\text{Concentration } (\mu g/L) = [(A_x)(A)(Vt)(D)]/[(As)(Vi)(Vs)]$$

$$\text{Aqueous Solid Conc. } (\mu g/kg) = [(A_x)(D)(A)(V_t)]/[(As)(Ws)(Vi)]$$

where:

A_x = Response for the analyte in the sample, (area or peak height
A = Amount of standard injected in ng
As = Response for the external standard
Vi = Volume of extract injected
D = Dilution factor, if any
Vt = Volume of total extract
Vs = Volume of sample extracted
Ws = Weight of sample extracted

For non-aqueous samples, the unit is ng/g and dry weight of sample is used for Ws.

7. QUALITY CONTROL

7.1 Required Instrument AC

7.1.1 It is required that the % RSD vary by <20% when 5 point calibration factors are compared.

7.1.2 It is required that difference of daily response of a given analyte vary ± 15% when compared to initial responses.

7.1.3 All succeeding standards in an analysis sequence must fall within daily retention time window established by the first standard of the sequence.

7.2 Matrix Spikes

7.2.1 For each analytical batch of up to 20 samples MS and MSD must be analyzed. If less than twenty samples are analyzed per month, MS/MSD must be analyzed on per month basis. Percent recoveries and Relative Percent Difference (RPD) should be calculated as follows:

$$\text{Matrix Spike Recovery \%} = \frac{SSR - SR}{SA} \times 100$$

where:

SSR = Spike Sample Results
SR = Sample Results
SA = Spike Added from Spiking Mix

$$RPD = \frac{D1 - D2}{(D1 + D2)/2} \times 100$$

D1 = First Sample Value
D2 = Second Sample Value

7.3 Lab Control Sample (LCS)

7.3.1 A control check sample is extracted and analyzed at frequency similar to MS/MSD with each extracted batch. Calculated concentrations are compared with the amount added and results are used in house monitoring of extraction and analytical process.

7.4 Blanks

7.4.1 Blank is extracted and analyzed with each analytical batch. Blanks must be contaminant free. Concentration of any confirmed peak should be less than CRQL. Gross contaminations must be investigated if they interfere with analyte peaks.

7.5 Percent recovery for the surrogate is periodically (minimum of once a year) determined using 20 consecutive blanks. Control limits for each surrogate compound is measured using the following formula:

Upper Control Limit (UCL) = p + 3s
Lower Control Limit (LCL) = p - 3s

where p is the mean recovery and s is the standard deviation.

8.0 SAFETY

8.1 Safety glasses for eye protection, laboratory coasts for body protection, latex gloves for hand protection.

8.2 Due to the toxicity or carcinogenicity of each reagent, each chemical compound should be treated as a potential health hazard.

8.3 Material Safety Data Sheets (MSDS) can be found on the procurement bookshelves in the rear secretarial area.

8.4 Preparation of the standard should be handled under a hood.

9.0 REFERENCES

9.1 Test Methods for Evaluating Solid Waste, Physical/Chemical Methods, SW-846, 3rd Edition

METHOD 8080A
ORGANOCHLORINE PESTICIDES AND POLYCHLORINATED BIPHENYLS BY GAS CHROMATOGRAPHY

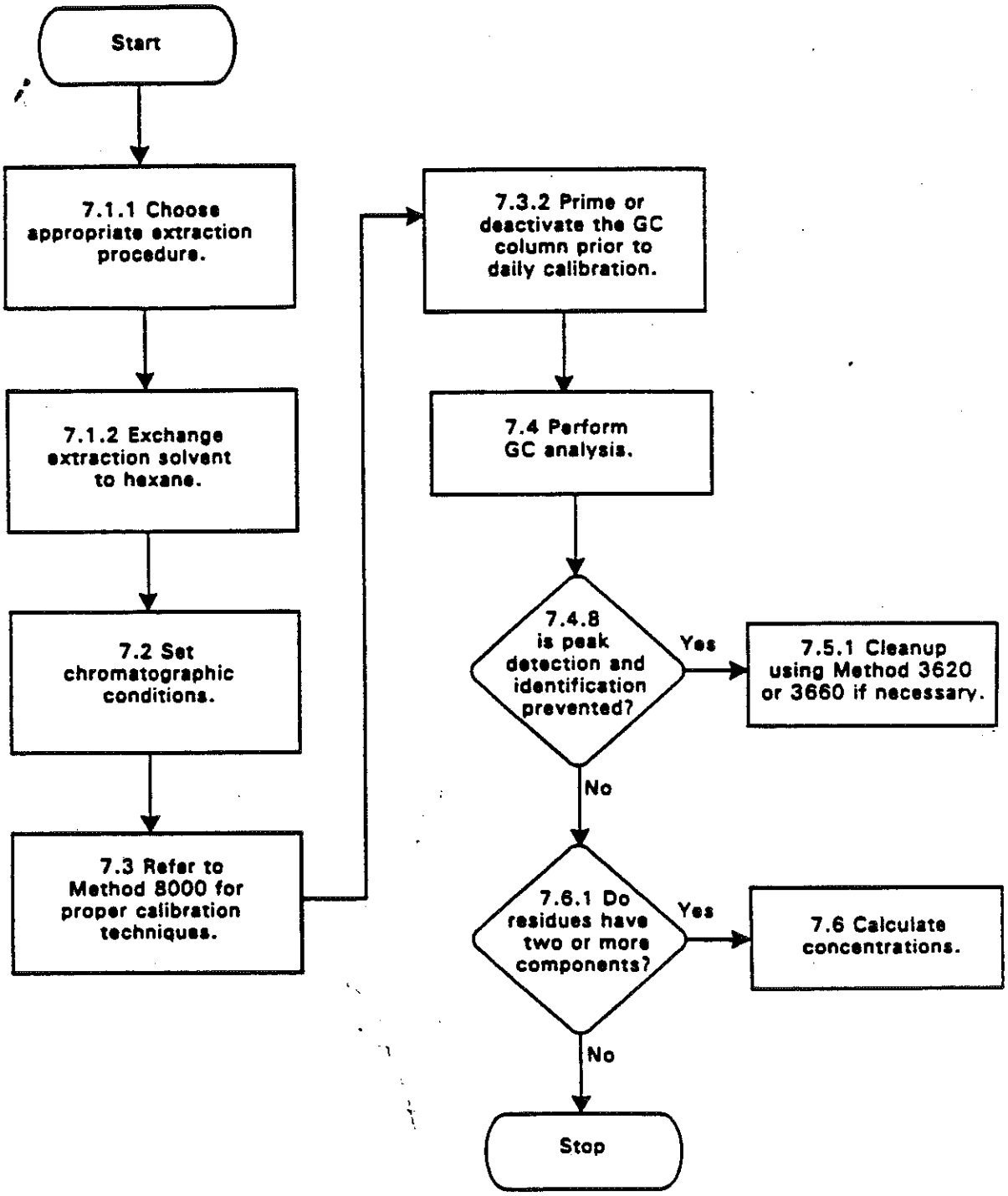

Effective Date: August 1, 1995
Version No.: 1.0
Initiated By: M. S[illegible]
Approved By: W. [illegible]

SOP No: 13.36

Title: Organophosphorus Pesticides by Method 8141A

1.0 APPLICATION AND SCOPE

1.1 This method applicable to the determination of certain organophosphorus (OP) pesticides. Specifically, it may be used to detect the following substances:

1.2 Tetraethylpyrophosphate
Thionazin (Zinophos)
Phorate
Disulfoton
Dimethoate
Methyl Parathion
Parathion
Carbophenothion
Famphur
Sulfotepp

Additional organophosphorus compounds may be determined by this method. Extended list of Organophosphorus compounds tabulated by Method 8141A plus the OP compounds listed as Appendix IX are applicable to this method.

2.0 SUMMARY OF METHOD

2.1 This method provides gas chromatographic conditions for the detection of ppb levels of certain organophosphoric pesticides. Prior to the use of this method, appropriate sample extraction techniques must be used. Both neat and dilute organic liquids may be analyzed by direct injection. A 2-μL of the extract is injected into a gas chromatograph using a flush solvent technique. The compounds are then detected with a flame photometric detection (FPD).

2.2 The sensitivity of this method usually depends on the level of interferences rather than on instrumental limitations.

2.3 This method is based on Method 8141A Organophosphorus Pesticides, which is found in USEPA SW-846, September 1994 Edition.

3.0 INTERFERENCES

3.1 Solvents, reagents, glassware, and other sample processing hardware may yield discrete artifacts and/or elevated baselines causing misinterpretation of gas chromatograms. All these materials must, therefore, be demonstrated to be free from interferences under the conditions of the analysis by running method blanks. Specific selection of reagents and purification of solvents by distillation in all-glass systems may be required.

3.2 Interferences coextracted from the samples will vary considerably from waste to waste.

3.3 Glassware must be scrupulously clean. Clean all glassware as soon as possible after use by rinsing with the last solvent used. This should be followed by detergent washing in hot water. Rinse with tap water, distilled water, acetone, and finally pesticide-quality hexane. Heavily contaminated glassware may require treatment in a muffle furnace at 400°C for 15 to 30 minutes.

3.4 Use of a flame photometric detector in the phosphorus mode will minimize interferences from materials that do not contain phosphorus.

3.5 Contamination by carryover can occur whenever high-level and low-level samples are sequentially analyzed. To reduce carryover, the sample syringe must be rinsed out between samples with reagent water or solvent. Whenever an unusually concentrated sample is encountered, it should be followed by analysis of a solvent blank to check for cross contamination.

4.0 SAFETY

4.1 The toxicity or carcinogenicity of each reagent used in this method has not been precisely defined; however, with chemical compound should be treated as a potential health hazard. From this viewpoint, exposure to these chemicals must be reduced to the lowest possible level by whatever means available.

4.2 All the analytes covered by this method have been tentatively classified as known or suspected, human or mammalian poisons.

5.0 SAMPLE COLLECTION, PRESERVATION AND HANDLING

5.1 Sample extracts are preserved by keeping them cooled to 4°C.

5.2 The holding time for extraction of the sample is within 7 days of sampling.

5.3 Samples must be analyzed within 40 days of extraction.

6.0 APPARATUS AND MATERIALS

6.1 Gas Chromatograph

6.1.1 Gas Chromatograph

Analytical system complete with gas chromatograph suitable for on-column injections and all required accessories, including detectors, column supplies, recorder, gases and syringes. A data system for measuring peak heights or areas.

6.1.2 Columns

6.1.2.1 Column 1

RTx-5, 30 m x 0.53 mm ID, 0.5um film thickness bonded silicone coated fused silica capillary column or equivalent.

6.1.3 Detectors - flamephotometric (FPD)

6.2 Microsyringe - 10 μL

6.3 Syringe - 5 mL

6.4 Vials - Glass, 2-, 10- and 20mL capacity with Teflon-lined screw cap.

7.0 REAGENTS AND STANDARD PREPARATION

7.1 Solvents - hexane, acetone (pesticide quality or equivalent).

7.2 Stock Standard Solutions

7.2.1 Stock standard solutions are made at volumes and concentrations useful for making working calibration standards, usually at 10,000 or 5,000 ppm depending on what stock is being prepared. When compound purity is assayed to be 96% or greater, the weight can be used without correction to calculate the concentration of the stock standard. Commercially prepared stock standards can be used at any concentration if they are certified by the manufacturer or by an independent source.

7.2.2 Transfer the stock standard solutions into Teflon-sealed screw-up bottles. Store at 4°C and protect from light. Stock standards should be checked frequently for signs of degradation or evaporation, especially just prior to preparing calibration standards from them.

7.2.3 Stock standard solutions must be replaced after six months or sooner if comparison with check standards indicates a problem.

7.3 Calibration Standards

Calibration standards at a minimum of five concentration levels (Table 2) for each parameter of interest are prepared through dilution of the stock standards with hexane. One of the concentration levels should be at a concentration near, but above, the method detection limit. The remaining concentration levels should correspond to the expected range of concentrations found in real samples or should define the working range of the GC. Calibration solutions must be replaced after six months, or sooner, if comparison with check standards indicates a problem. See Table 1 for actual calibration levels.

7.4 Surrogate Standards

The extraction and analytical system performance is monitored by spiking pesticide surrogate into each standard, sample and reagent water blank. Ethyl p-nitrophenylbenzenthiophosphonate (EPN) is the primary surrogate standard and should be used whenever possible. See Table 1 for surrogate concentration levels. See section 12 for surrogate acceptance limits and corrective action. A surrogate standard is also prepared containing Tetrapropylphosphate (TPP). The levels can be found on Table 1.

8.0 CALIBRATION

8.1 The working calibration range of this method can be found for each compound by looking at Table 1. The calibration range is that range which is inclusive of the 5 standards run for each compound.

8.2 External standard calibration procedure

8.2.1 For each analyte of interest, prepare calibration standards at a minimum of five concentration levels by adding volumes of one or more stock standards to a volumetric flask and diluting to volume with an appropriate solvent. One of the external standards should be at a concentration near, but above, the method detection limit. The other concentrations should correspond to the expected range of concentrations found in real samples or should define the working range of the detector.

8.2.2 Inject each calibration standard using the technique that will be used to introduce the actual samples into the gas chromatograph (e.g., 2 μL injections). Tabulate peak height responses against the concentration injected. The results can be used to prepare a calibration curve for each analyte. Alternatively, for samples that are introduced into the gas

chromatograph using a syringe, the ratio of the response to the amount injected, defined as the calibration factor (CF), can be calculated for each analyte at each standard concentration. If the percent relative standard deviation (%RSD) of the calibration factor is less than 20% over the working range, linearity through the origin can be assumed, and the average calibration factor can be used in place of the calibration curve.

$$\text{Calibration factor} = \frac{\text{Total Height of Peak}}{\text{conc. of std (in } \mu\text{g/ml)}}$$

8.2.3 The working calibration curve or calibration factor must be verified on each working day by the injection of one or more calibration standards. The frequency of verification is dependent of the detector. A mid-level continuing calibration standard must be analyzed every working day (at a minimum) and every 10 samples. If the response for any analyte varies from the predicted response by more than ±15%, a new calibration curve must be prepared for that analyte.

$$\text{Percent Difference} = \frac{|R_1 - R_2| \times 100}{R_1}$$

Where:

R_1 = Calibration Factor from first analysis.
R_2 = Calibration Factor from succeeding analyses.

8.3 Retention Time Windows

8.3.1 Before establishing windows, make sure the GC system is within optimum operating conditions. Make three injections of all single component standard mixtures throughout the course of a 72 hour period. Serial injections over less than a 72 hour period result in retention time windows that are too tight.

8.3.2 Calculate the standard deviation of the three absolute retention times for each single component standard. The peak chosen should be fairly immune to losses due to degradation and weathering in samples.

8.3.3 Plus or minus three times the standard deviation of the absolute retention times for each standard will be used to define the retention time window; however, the experience of the analyst should weigh heavily in the interpretation of chromatograms.

8.3.4 In those cases where the standard deviation for particular standard is zero, the analyst must substitute the standard deviation of a close eluting, similar compound to develop a valid retention time window.

8.3.5 The retention time windows will be updated at least weekly.

8.3.6 The analyst must calculate retention time windows for each standard on each GC column and whenever a new GC column is installed. The data must be retained by the analyst in each batch carcass.

9.0 QUALITY CONTROL

9.1 Method detection limits are calculated according to 40CFR Part 136, Appendix B of the Federal Register.

9.2 Before processing any samples, the analyst should demonstrate through the analysis of a reagent water blank, that interferences from the analytical system, glassware and reagents are under control. Each time a set of samples is extracted or there is a change in reagents, a reagent water blank should be processed as a safeguard against chronic laboratory contamination. The blank samples should be carried through all stages of the sample preparation and measurement steps.

9.3 For each analytical batch (up to 20 samples), a reagent blank, matrix spike and matrix spike duplicate must be analyzed (the frequency of the spikes may be different for different monitoring programs). The blank and spiked samples must be carried through all stages of the sample preparation and measurement steps.

Required Instrument QC:

9.3.1 Section 8.2 requires that a %RSD vary by <20% when comparing calibration factors to determine if a five point calibration curve is linear.

9.3.2 Section 8.2 sets a limit of ±15% difference when comparing the initial response of a give analyte versus any succeeding standards analyzed during an analysis sequence.

9.4 The laboratory must, on an ongoing basis, perform at least one MS/MSD per analytical batch (maximum of 20 samples per batch) to assess accuracy. If ten or less samples are analyzed within a given month, at least one spiked sample per month is required.

9.5 As part of the QC program for the laboratory, method accuracy for each matrix studied must be assessed and records must be maintained. After the analysis of five spiked samples (of the sample matrix type), calculate the average percent recovery (p) and the standard deviation of the percent recovery (sp).

9.6 To determine acceptable accuracy and precision limits for surrogate standards, the following procedure should be performed:

9.6.1 For each sample analyzed, calculate the percent recovery of each surrogate in the sample.

9.6.2 Once a minimum of 20 blanks of the same matrix have been analyzed, calculate the average percent recovery (p) and standard deviation of the percent recovery (s) for each of the surrogates.

9.6.3 For a given matrix, calculate the upper and lower control limit for method performance for each surrogate standard. This should be done as follows:

Upper Control Limit (UCL) = p + 3s
Lower Control Limit (LCL) = p - 3s

9.6.4 If recovery is not within limits, the following is required:

- Check to be sure there are no errors in calculations, surrogate solutions and internal standards. Also, check instrument performance.

- Recalculate the data and/or reanalyze the extract if any of the above checks reveal a problem.

9.6.5 At a minimum, surrogate recovery limits are reviewed on a matrix-by-matrix basis, annually.

9.7 Summary of QC

Surrogates	Every sample and standard
Calibration check standard	Every working day After every 10th injection
Method blank	One per batch, per matrix, per concentration level
Matrix spike	One per batch, per matrix, per concentration level

Matrix spike duplicate	One per batch, per matrix, per concentration level
QC blank spike sample (Laboratory Control Sample)	One per batch, per matrix, per concentration level

10.0 INSTRUMENTAL PROCEDURES

10.1 Gas Chromatography Conditions

10.1.1 Column - A 30um, 0.53 ID, 0.5um RTX5 column used. GC parameters are as follows:

- Splitless mode
- Purge flow 2ml/min
- Splitless flow 50ml/min
- Carrier gas He at about 10ml/min
- Oven heating parameters
  - Inj part 200°
  - Initial temp 45°
  - Initial time 2 min
  - Ramp Rate 25°/min
  - Final temp 250°
  - Final time 2 min
- Detector Parameters
  - Detector in phosphorous mode
  - Temp 250°
  - Nitrogen flow 8ml/min
  - Air flow 100ml/min
  - Hydrogen flow 80ml/min

10.2 Suggested chromatography system maintenance:
Corrective action may require one or more of the following remedial actions.

10.2.1 Capillary columns: Clean and deactivate the glass injection port insert or replace with a cleaned deactivated insert. Carefully cut off the first few inches (up to one foot) of the injection port side of the column. Remove the column and solvent backflush according to the manufacturer's instructions. If problems persist, replace the column.

10.3 A compound is qualitatively identified as being present if the peak is detected within the established retention time window for that specific compound. To confirm that an analyte is present, the extract must be run on a secondary column. Again, the peak must be detected within the established retention time window.

10.4 If both columns confirm the presence of an analyte, the analyte is quantitated using the peak area of the primary column. The concentration of the analyte is then computed using the calculation from Section 11.1.

10.5 The target analyte concentration must be within the calibration range for quantitation. If the sample requires dilution, the dilution must also be acquired on a secondary column for confirmation.

11.0 CALCULATIONS

11.1 External Standard Calibration

Aqueous Samples:

Concentration (μg/L) = $[(A_x)\ (V_t)\ (D)]/[(CF)\ (V_i)\ (V_s)]$

Where:

A_x = Response for the analyte in the sample, units are peak heights counts.

CF = Calibration Factor (see Section 8.2.2)

V_i = Volume of extract injected, μL.

D = Dilution factor - if dilution was made on the sample prior to analysis. If no dilution was made, D = 1, dimensionless.

V_t = Volume of total extract, μL.

V_s = Volume of sample extracted, mL.

Nonaqueous Samples:

Concentration (μg/kg) = $[(A_x\ (D)\ (V_t)]/[(CF)\ (W_s)\ (V_i)]$

Where:

A_x = Response for one analyte in the sample, units are peak heights counts.

CF = Calibration Factor (see Section 8.2.2.)

V_i = Volume of extract injected, μl.

D = Dilution Factor - if dilution was made on the sample prior to analysis. If no dilution was made D=1, dimensionless.

V_t = Volume of total extract, μl.

W_s = Weight of sample extracted, either dry weight or wet weight may be used, depending upon the specific application. All concentrations are to be reported on a dry weight basis otherwise specified.

11.2 Percent Recovery (%R)

$$\%R = \frac{\text{(Observed - Sample) Concentration}}{\text{Expected Concentration}} \times 100$$

11.3 Relative Percent Difference (RPD)

$$RPD = \frac{\text{(Measurement 1 - Measurement 2)}}{\text{Average of Measurement 1 and 2}} \times 100$$

12.0 ACCEPTANCE OF DATA

12.1 If the method blank contains any analytes of interest above the method detection limit as determined by GC analysis, the batch is rejected and the samples are re-extracted.

12.2 The advisory limits for the surrogate recovery are:

TPP	25-125 (Aqueous)	20-150 (Non-aqueous)

12.2.1 If the percent recovery is outside of the control limits, the sample must be reanalyzed. If the surrogate recoveries for method blank are outside the advisory limit reanalysis and/or re-extraction of the blank and associated samples is required.

13.0 REPORTING OF RESULTS

13.1 Aqueous results are routinely reported as µg/L and nonaqueous results as µg/kg.

13.2 If the analyte is detected above the minimum reporting limits, the value will be reported.

13.3 If there is no evidence of the presence of the analyte, the analyte is reported as ND.

13.4 If the analyte is detected below the practical quantitation limit, the analyte is reported as BQL.

14.0 SUPPLEMENTAL DOCUMENTS

14.1 GP Sops for sample preparations.

15.0 REFERENCES

15.1 Test Methods for Evaluating Solid Waste, United States Environmental Protection Agency, SW-846, Volume 1-B Laboratory Manual, Third Edition, November 1986, "Method 8000 Gas Chromatography" and "Method 8140 Organophosphorous Pesticides".

Table 1

Standards

L E V E LS

Calibration Levels for Individual Mix A:

Compound	I	II	III	IV	V
Tetraethylpyrophosphate	0.25	0.50	1.00	2.00	4.00
Thionazin (Zinophos)	0.10	0.20	0.40	0.80	1.60
Disulfoton	0.05	0.10	0.20	0.40	0.80
Dimethoate	0.25	0.50	1.00	2.00	4.00
Methyl Parathion	0.10	0.20	0.40	0.80	1.60
Parathion	0.10	0.20	0.40	0.80	1.60
Famphur	1.00	2.00	4.00	8.00	16.00
TPP	0.20	0.50	1.00	2.00	4.00
Sulfotep	0.20	0.50	1.00	2.00	4.00

Calibration Levels for Individual Mix B:

Compound	I	II	III	IV	V
Phorate	0.25	0.50	1.50	2.00	4.00
Carbophenothion	1.00	2.00	4.00	8.00	16.00

Calibration standards units are μg/ml. Application of the sample extraction concentration step (1000 ml to 10 ml) decreases the equivalent concentration by a fraction of 100x.

CORRECTIVE ACTION TABLE
ORGANOPHOSPHORUS PESTICIDES BY GC/FPD

QC PARAMETER	FREQUENCY	CRITERIA	ACTION
Retention Time Window (RT)	Every Calibration standard; sample surrogate	+3 standard deviation of absolute RT	Verify calibration standard Check instrument performance Evaluate matrix interference Re-establish RT windows
Initial 5 PT Calibration Average Response CF: %RSD	Prior to Sample analysis	<20%	Verify calibration standard Check regression criteria
Linear Regression: Corr. Coefficient [1yr intercept value]		>0.995 <Reporting Limit	Verify calibration standards Calibrate check standard for possible contamination Recalibrate instrument for that analyte
Continuing Calibration: (Mid Level Standard) %D	Every working day: every 10 samples.	<15%	Verify calibration standard Check instrument performance Recalibrate instrument for that analyte Reanalyze any samples acquired after failed continuing calibration standard
Method Blank	1 per every batch per matrix per concentration	All analytes detected below the reporting limit.	Check Instrument performance Recalibrate/re-analyze Contact QA if reoccurs

QC PARAMETER	FREQUENCY	ACCEPTANCE CRITERIA	CORRECTIVE ACTION
Method Blank	1 per batch per matrix per concentration	All analytes detected below the reporting limit	Check instrument performance Recalibrate/re-analyze Contact QA if reoccurs
QC Blank Spike (QC Check Sample)	1 per batch per matrix per Concentration level	See Table 3	Verify standards and calculation Check instrument performance Recalculate/reanalyze sample
Matrix Spike / Matrix Spike Duplicate	1 per batch (maximum of 20 samples) per matrix per concentration level	See Table 3	Verify standards and calibration Check instrument performance Evaluate for possible matrix interference
Surrogates	All standards, blanks, samples	TPP: Aqueous: 25-125% Nonaqueous: 20-150%	Verify calculation and instrument performance Confirm on a secondary column Reanalyze sample. If surrogate out of control in Blank, Confirm on a secondary column Re-extract/re-analyze batch.

METHOD 8141A
ORGANOPHOSPHORUS COMPOUNDS BY GAS CHROMATOGRAPHY: CAPILLARY COLUMN TECHNIQUE

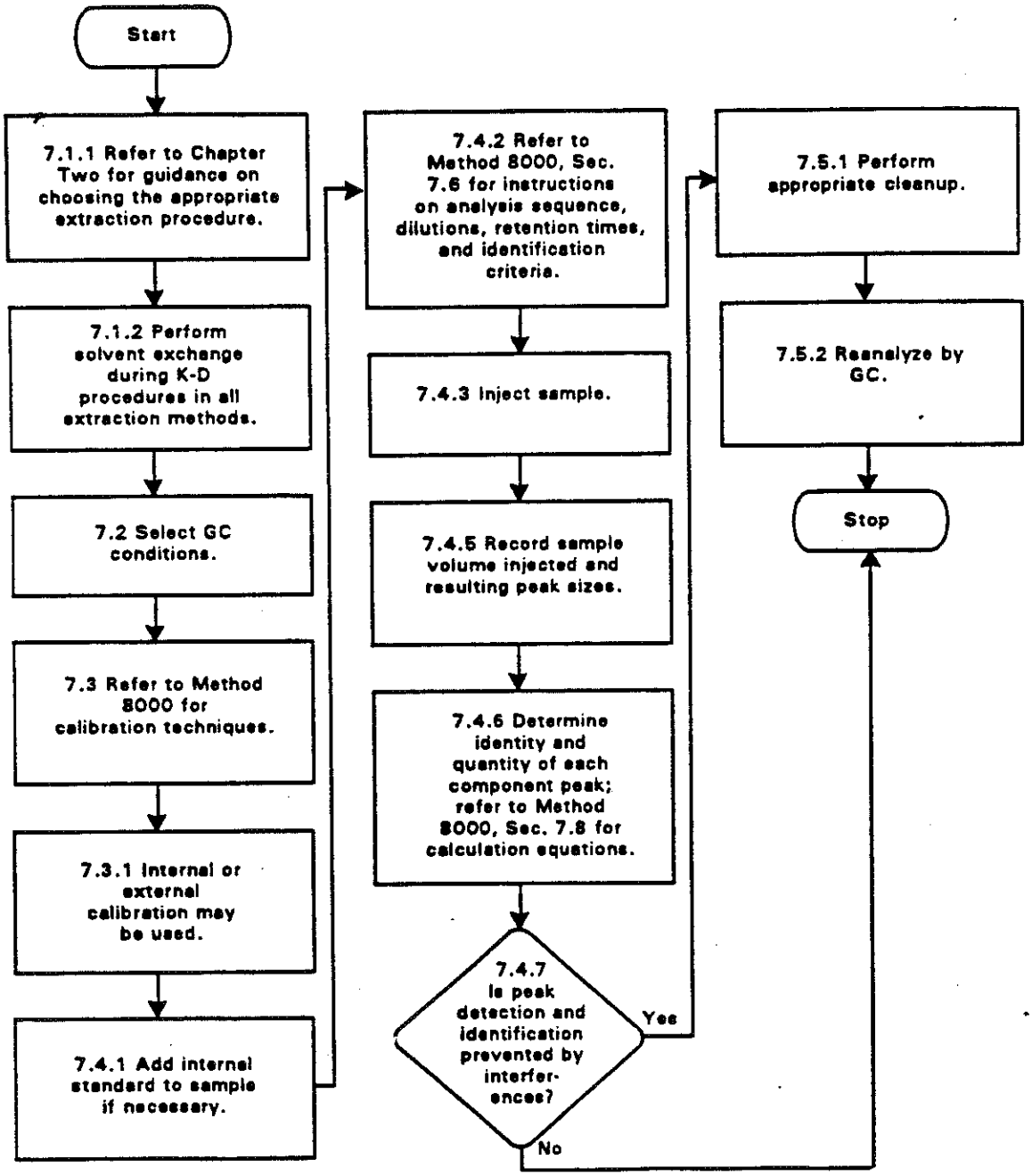

Effective Date: July 1995
Version Number: 1
Initiated By:
Approved By:

SOP No: 13.35

Title: Analysis of Herbicides by Method 8150B

1.0 SCOPE AND APPLICATION

1.1 This method is applicable to the determination of certain chlorophenoxy acid herbicides by GC/ECD.

1.2 The following compounds can be determined using this method:

2,4-D	2,4,5-T	2,4,5-TP
2,4-DB	Dichlorprop	MCPP
Palapon	Dinoseb	
Dicamba	MCPA	

2.0 SUMMARY OF METHOD

2.1 Method 8150 provides extraction, esterification, and gas chromatographic conditions for the analysis of chlorinated phenoxy acid herbicides. The esters are hydrolyzed with potassium hydroxide, and extraneous organic material is removed by a solvent wash. After acidification, the acids are extracted with solvent and converted to their methyl esters using diazomethane as the derivatizing agent. After excess reagent is removed, the esters are determined by gas chromatography employing an electron capture detector. The results are reported as the acid equivalents.

3.0 INTERFERENCES

3.1 Organic acids, especially chlorinated acids, cause the most direct interference with the determination. Phenols, including chlorophenols, may also interfere with this procedure.

3.2 The herbicides, being strong organic acids, react readily with alkaline substances and may be lost during analysis.

3.3 Solvents, reagents, glassware and other sample processing hardware may yield discrete artifacts and/or elevated baselines causing misinterpretation of gas chromatograms. All these materials must, therefore, be demonstrated to be free from interferences under the

conditions of the analysis by running method blanks. Specific selection of reagents and purification of solvents by distillation in all-glass systems may be required.

3.4 Interferences coextracted from the samples will vary considerably from waste to waste. While general cleanup techniques are provided as part of this method, unique samples may require additional cleanup approaches to achieve desired sensitivities.

3.5 Glassware must be scrupulously clean. Clean all glassware as soon as possible after use by rinsing with the last solvent used. This should be followed by detergent washing in hot water. Rinse with tap water, distilled water, acetone, and finally pesticide-quality hexane. Heavily contaminated glassware may require treatment in a muffle furnace at 400°C for 15 to 30 minutes.

4.0 SAFETY

4.1 The toxicity or carcinogenicity of each reagent used in this method has not been precisely defined; however, each chemical compound should be treated as a potential health hazard. From this viewpoint, exposure to these chemicals must be reduced to the lowest possible level by whatever means available. The laboratory is responsible for maintaining a current awareness file of OSHA regulations regarding the safe handling of the chemicals specified in this method. A reference file of material data handling sheets should also be made available to all personnel involved in the chemical analysis.

5.0 SAMPLE CONTAINERS, COLLECTION AND PRESERVATION

5.1 Samples are preserved by keeping them cooled to 4°C.

5.2 The holding time for extraction of the sample is within 7 days of sampling. Sample extracts must be analyzed within 40 days of extraction.

6.0 APPARATUS AND MATERIALS

6.1 Gas Chromatograph

6.1.1 Gas Chromatograph

Analytical system complete with gas chromatograph suitable for splitless mode capillary column injections and all required accessories, including detector, column supplies, recorder, gases and syringes. A data system for measuring peak heights. The gas chromatograph is a Hewlett Packard 5890A.

6.1.2 Columns - Dual column connected with a "Y" connector to a guard column is used. In this mode, material injected is split between the columns and detected by 2 separate ECD detectors.

6.2 Vials: Amber glass, 10- to 15-mL capacity with Teflon-lined screw cap.

6.3 Microsyringe: 10-uL.

6.4 Syringe: 5-mL

7.0 REAGENTS AND STANDARD PREPARATION

7.1 Solvents: Acetone, methanol, ether, methylene chloride, hexane (pesticide quality or equivalent).

7.2 Stock standard solutions: Stock standard solutions can be prepared from pure standard materials or purchased as certified solutions.

7.2.1 Prepare stock standard solutions by accurately weighing about 0.0100g of pure methylesters. Dissolve the material in hexane (pesticide quality) solvent and dilute to volume in a 10-mL volumetric flask. Larger volumes can be used at the convenience of the analyst. If compound purity is certified at 96% or greater, the weight can be used without correction to calculate the concentration of the stock standard. Commercially prepared stock standards can be used at any concentration if they are certified by the manufacturer or by an independent source.

7.2.2 Transfer the stock standard solutions into Teflon-sealed screw-cap bottles. Store at 4°C and protect from light. Stock standard solutions should be checked frequently for signs of degradation or evaporation, especially just prior to preparing calibration standards from them.

7.2.3 Stock standard solutions must be replaced after 1 year, or sooner if comparison with check standards indicates a problem.

7.3 Calibration Standards

7.3.1 Calibration standards at a minimum of five concentration levels (listed below) for each parameter of interest are prepared through dilution of the stock standards with hexane. One of the concentration levels should be at a concentration near, but above, the method detection limit. The remaining concentration levels correspond to the expected range of concentrations found in the real samples

or define the working range of the GC. Calibration solutions must be replaced after six months, or sooner, if comparison with check standards indicates a problem.

Concentrations in µg/L

Compound	I	II	III	IV	V
2,4-DCAA (Sur)	25	50	100	150	200
Dalapon	250	500	1000	1500	2000
Dicamba	50	500	1000	1500	2000
Dichloroprob	25	50	100	150	200
2,4-D	25	50	100	150	200
2,4,5-TP (Silvex)	250	500	1000	1500	2000
2,4-DB	25	50	100	150	200
2,4,5-T	250	500	1000	1500	2000
Dinoseb	25	50	100	150	200
MCPA	10	25	50	75	100
MCPP	10	25	50	75	100

7.4 Surrogate Standards

has been chosen to be the surrogate for this analysis. See above calibration table for actual calibration ranges.

8.0 CALIBRATION

8.1 Inject 4 microliter of each calibration standard using the splitless mode. Tabulate peak height or area responses against the mass injected. The results are used to prepare a calibration curve for each analyte. Alternatively, the ratio of the response to the amount injected, defined as the calibration factor (CF), can be calculated for each analyte at each standard concentration. If the percent relative standard deviation (%RSD) of the calibration factor is less than 20% over the working range, linearity through the origin can be assumed, and the average calibration factor can be used in place of the calibration curve.

$$\text{Calibration factor} = \frac{\text{Height of Peaks}}{\text{mass injected (nanograms)}}$$

8.2 The working calibration curve or calibration factor must be verified on each working day by the injection of one calibration standards. A mid-level continuing calibration standard must be analyzed every 12 hours and every 10 sample injections. If the response for any analyte varies from the predicted response by more than +15%, a new calibration curve must be prepared for that analyte.

$$\text{Percent Difference} = \frac{[R_1 - R_2] \times 100}{R_1}$$

where:

R_1 = Average Calibration Factor
R_2 = Calibration Factor from succeeding analyses

8.3 Retention Time Windows

8.3.1 Before establishing windows, make sure the GC system is within optimum operating conditions. Make three injections of all calibration standard mixtures.

8.3.2 Calculate the standard deviation of the three absolute retention times for each component.

8.3.3 The mean retention time plus or minus three times the standard deviation of the mean retention time for each component will define the retention time window; however, the experience of the analyst should weigh heavily in the interpretation of chromatograms.

8.3.4 In those cases where the standard deviation for particular standard is zero, the laboratory must substitute the standard deviation of a close eluting, similar compound to develop a valid retention time window.

8.3.5 The retention time windows are updated at least weekly or upon sample analysis if the method is performed less frequently.

8.3.6 The laboratory must calculate retention time windows for each component on each GC column and whenever a new GC column is installed. The data must be retained by the analyze in each batch carcass.

9.0 QUALITY CONTROL

9.1 Method detection limits are calculated according to 40CFR Part 136, Appendix B of the Federal Register.

9.2 Minimum Reporting Levels for all compounds are the method detection limits and can be found on Table 1.

9.3 Before processing any samples, the analyst should demonstrate through the analysis of a reagent water blank, that interferences from the analytical system, glassware and reagents are under control. Each time a set of samples is extracted or there is a

change in reagents, a reagent water blank should be processed as a safeguard against chronic laboratory contamination. The blank samples should be carried through all stages of the sample preparation and measurement steps.

9.4 For each analytical batch (up to 20 samples), a reagent blank, matrix spike and matrix spike duplicate must be analyzed. The blank and spiked samples must be carried through all stages of the sample preparation and measurement steps.

Required Instrument QC:

9.4.1 Section 8.1 requires that a %RSD vary by <20% when comparing calibration factors to determine if a five point calibration curve is linear.

9.4.2 Section 8.2 sets a limit of ±15% difference when comparing daily response of a given analyte versus the initial response. If the limit is exceeded, a new standard curve must be prepared.

9.4.3 Paragraph 8.2 sets a limit of ±15% difference when comparing the initial response of a given analyte versus any succeeding standards analyzed during an analysis sequence.

9.5 The laboratory must, on an ongoing basis, perform at least one Matrix Spike/Matrix Spike Duplicate per analytical batch (maximum of 20 samples per batch) to assess accuracy. If ten or less samples are analyzed within a given month, at least one MS/MSD sample per 14 days is required.

9.6 To determine acceptable accuracy and precision limits for surrogate standards, the following procedure should be performed:

9.6.1 For each blank analyzed, calculate the percent recovery of each surrogate in the blank.

9.6.2 Once a minimum of thirty blanks of the same matrix have been analyzed, calculate the average percent recovery (p) and standard deviation of the percent recovery (s) for each of the surrogates.

9.6.3 For a given matrix, calculate the upper and lower control limit for method performance for each surrogate standard. This should be done as follows:

$$\text{Upper Control Limit (UCL)} = p + 3s$$
$$\text{Lower Control Limit (LCL)} = p - 3s$$

9.6.4 If recovery is not within limits, the following is required:

- Check to be sure there are no errors in calculations, surrogate solutions and internal standards. Also, check instrument performance.

- Recalculate the data and/or reanalyze the extract if any of the above checks reveal a problem.

9.6.5 At a minimum, surrogate recovery limits are reviewed on a matrix-by-matrix basis, annually.

9.7 Summary of QC

Surrogates	Every sample and standard
Calibration check standard	Every 12 hours After every 10th sample injection
Method blank	One per batch, per matrix, per concentration level
Matrix spike	One per batch, per matrix, per concentration level
Matrix spike duplicate	One per batch, per matrix, per concentration level
QC blank spike sample (Laboratory Control Sample)	One per batch, per matrix, per concentration level

10. INSTRUMENTAL PROCEDURES

10.1 Gas Chromatography

10.1.1 Gas Chromatography Conditions

Column 1: DB1701

Carrier Gas	Helium
Split Flow	60 ml/min
Purge Flow	3 ml/min
Column Flow	4 ml/min @ 180°C
Make-Up Flow	60 ml/min (95:5 Argon/Methane)
Injector Port	265°C
Column Temp	150°C Isothermal
Final Temp	270°C
Final Time	5 min.
Ramp Rate	4°/min.
Split Valve On	1.0 min.
Split Valve Off	0.0 min.

Column 2: DB5	
Carrier Gas	He
Split Flow	60 ml/min
Purge Flow	3 ml/min
Column Flow	4 ml/min @ 180°C
Make-Up Flow	60 ml/min (95:5 Argon/Methane)
Injector Port	265°C
Column Temp	180°C Isothermal
Final Temp	240°C
Final Time	5 min.
Ramp Rate	4°/min.
Split Valve On	0.5 min.
Split Valve Off	0 min.

10.2 Suggested chromatography system maintenance: corrective action may require the following remedial action.

10.2.1 Capillary columns: Clean and deactivate the glass injection port insert or replace with a cleaned deactivated insert. Carefully cut off the first few inches (up to one foot) of the injection port side of the column. Remove the column and solvent backflush according to the manufacture's instructions. If degradation problems persist, replace the column.

10.3 A compound is qualitatively identified as being present if the peak is detected within the established retention time window for that specific compound. To confirm that an analyte is present, the extract must be run on a secondary column. Again, the peak must be detected within the established retention time window.

10.4 If both columns confirm the presence of an analyte, the analyte is quantitated using the peak area of the primary column. The concentration of the analyte is then computed using the calculation from Section 11.1.

10.5 The target analytes concentration must be within the calibration range for quantitation. If the sample requires dilution, the dilution must also be acquired on a secondary column for confirmation.

11.0 CALCULATIONS

11.1 External Standard Calibration

<u>Aqueous Samples:</u>

Concentration (ug/L) = $[(A_x)(V_t)(D)]/[(CF)(V_i)(V_s)]$

Where:

A_x = Response for the analyte in the sample, units are peak heights counts

CF = Calibration Factor (See Section 8.2.2)

V_i = Volume of extract injected, uL

D = Dilution factor - if dilution was made on the sample prior to analysis. If no dilution was made, D = 1, dimensionless

V_t = Volume of total extract, uL

V_s = Volume of sample extracted, ml

Nonaqueous Samples:

Concentration (ug/kg) = $[(A_x)(D)(V_t)]/[(CF)(W_s)(V_i)]$

Where:

A_x = Response for the analyte in the sample, units are peak heights counts

CF = Calibration Factor (See Section 8.2.2)

V_i = Volume of extract injected, uL

D = Dilution factor - if dilution was made on the sample prior to analysis. If no dilution was made, D = 1, dimensionless

V_t = Volume of total extract, uL

W_s = Weight of sample extracted. Either dry weight or wet weight may be used, depending upon the specific application. All concentrations are to be reported on a dry weight basis otherwise specified.

11.2 Percent Recovery (%R)

$$\%R = \frac{\text{(Observed - Sample) Concentration}}{\text{Expected Concentration}} \times 100$$

11.3 Relative Percent Difference (RPD)

$$RPD = \frac{\text{(Measurement 1 - Measurement 2)}}{\text{Average of Measurement 1 and 2}} \times 100$$

12.0 ACCEPTANCE OF DATA

12.1 If the method blank contains any analytes of interest above the method detection limit as determined by GC analysis, the batch is rejected and the samples are re-extracted.

12.2 The percent recovery for the entire surrogate is periodically (annually) determined using 20 cause blanks. Control limits surrogate compound is measured using the following formula:

Upper Control Limit (UCL) = p + 3s
Lower Control Limit (LCL) = p - 3s

where p is the mean and s is standard deviation.

13.0 REPORTING OF RESULTS

13.1 The minimum reporting limits for all compounds are the method detection limits and can be found in Table 1.

13.2 Aqueous results are routinely reported as ug/L and nonaqueous results are ug/kg.

13.3 TCLP results are t/o be reported as µg/L.

13.4 The number of significant figures to be reported is three.

13.5 If the analyte is detected above the minimum reporting limits, the value will be reported.

13.6 If there is no evidence of the presence of the analyte, the analyte is reported as ND.

13.7 If the analyte is detected below the practical quantitation detection limit, the analyte is reported as BQL.

14.0 SUPPLEMENTAL DOCUMENTS

14.1 Method 8150 SOP for sample preparation.

15.0 REFERENCES

15.1 U.S. EPA 40 CFR Part 136: Guidelines Establishing Test Procedures for the Analysis of Pollutants Under the Clean Water Act. October 1984.

15.2 Test Methods for Evaluating Solid Waste, United States Environmental Protection Agency, SW-846, Volume 1-B Laboratory Manual, Third Edition, November 1986, "Method 8000 Gas Chromatography" and "Method 8150 Chlorinated Herbicides".

METHOD 8150B
CHLORINATED HERBICIDES BY GAS CHROMATOGRAPHY

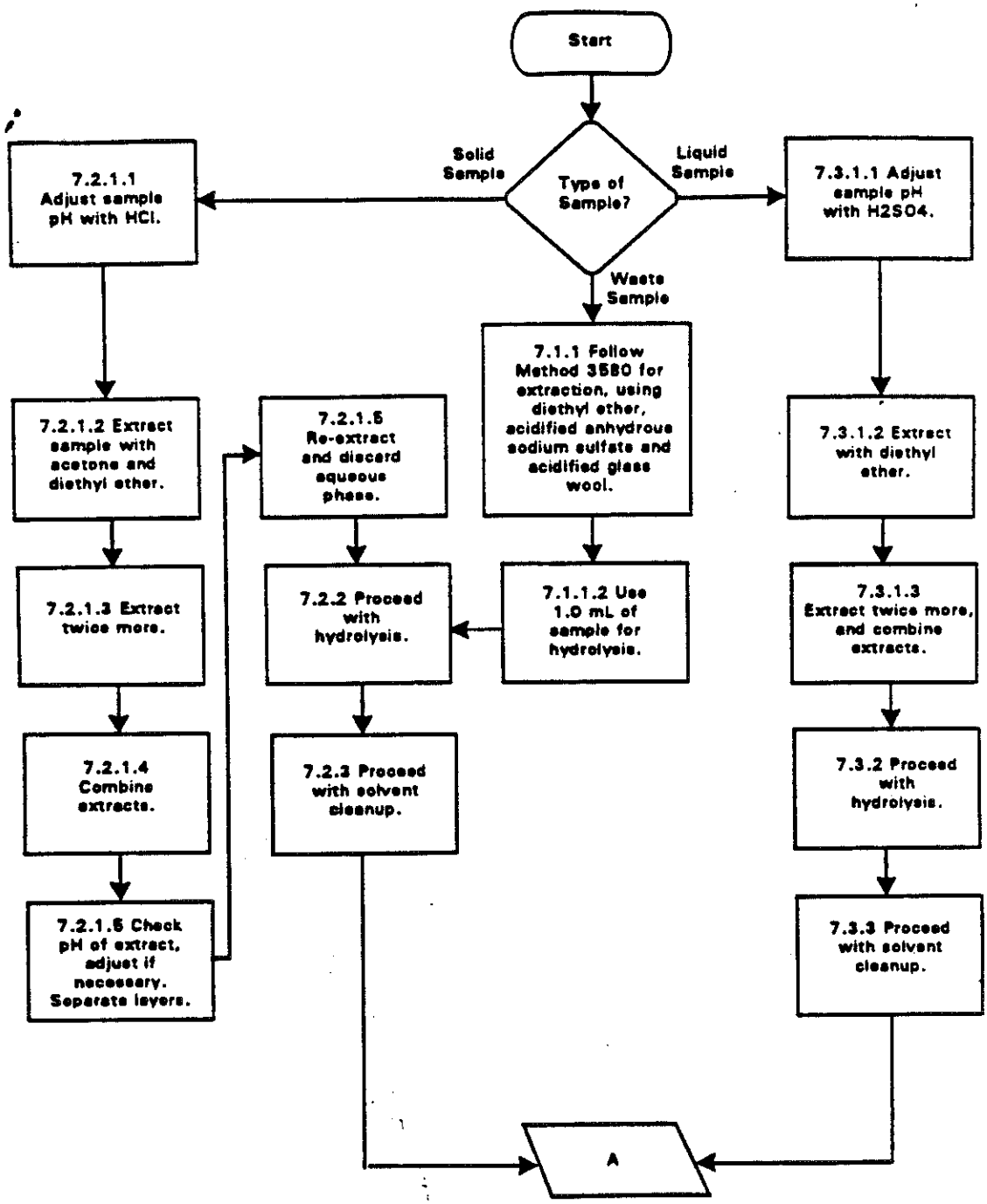

METHOD 8150B
(Continued)

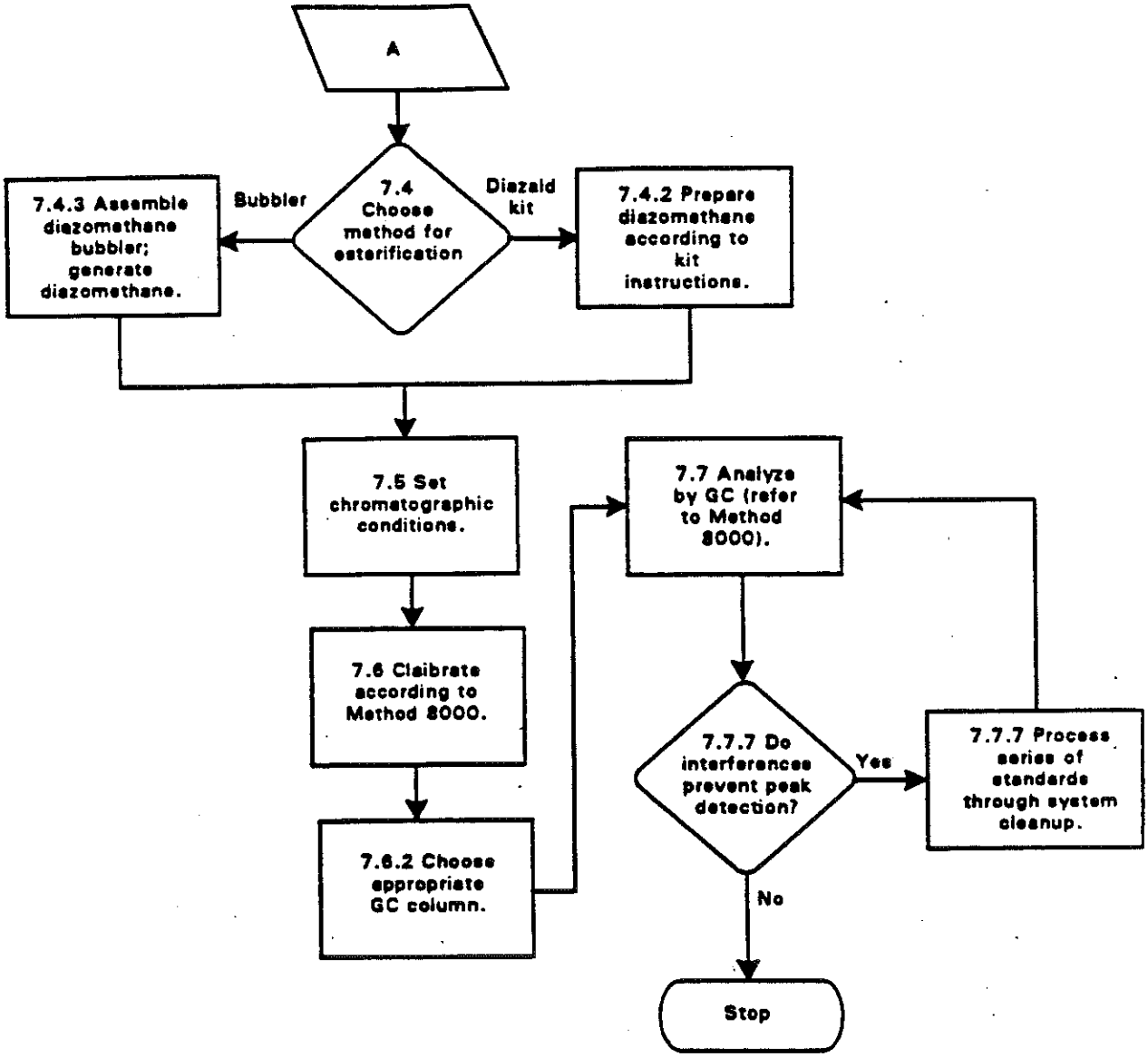

Effective Date: July 27, 1995
Version Number: 1.0
Initiated By :
Approved By :

SOP No.: 11.36

Title : Acid Digestion of Surface and Ground Water Samples for Flame/ICP Analyses and Furnace Analysis of Antimony in accordance with SW 846 Method 3005A.

Scope : The method detailed in this procedure is performed to prepare aqueous samples for quantitation of certain metallic analytes using Inductively Coupled Plasma (ICP) or Flame Atomic Absorption (FLAA) or Graphite Furnace Atomic Absorption for antimony (GFAA) spectroscopy in accordance with SW 846 method 3005A.

I. Purpose

The method detailed in this procedure is used to prepare aqueous samples for analysis using an Inductively Coupled Plasma (ICP) spectrophotometer or a Flame Atomic Absorption (FLAA) spectrophotometer or Graphite Furnace Atomic Absorption for antimony (GFAA). The sample holding time before digestion is 180 days. Samples must be stored in refrigerator at 4°C until time of preparation. The elements to be analyzed using this procedure are:

ICP Elements	FLAA Elements	GFAA Elements
Al	K	Sb
Ba	Na	
Be		
Cd		
Ca		
Cr		
Co		
Cu		
Fe		
Mg		
Mn		
Ni		
V		
Zn		

This method is also applicable to other metals.

II. References

SW 846 method 3005A revision 1

III. Equipment and Supplies

- 250 ml teflon beakers
- 100 ml volumetric flasks
- Hot plate
- Whatman No. 41 filter paper
- 250 ml sample bottle (plastic)
- Watch glass
- Plastic disposable funnels
- Thermometer, calibrated, NBS traceable
- Fume hood
- Eppendorf and Oxford pipettors (calibrated)
- 100 ml graduated cylinders

IV. Reagents

- Concentrated Nitric Acid - trace metals grade

- Concentrated Hydrochloric Acid - trace metals grade

- Metals Standards - commercially prepared NBS traceable metals standards with documented concentrations, including impurities and expiration dates (Vendor: High Purity Standards, Charleston, SC).

- 10 ppm Antimony standard - dilute 1000 stock Antimony standard 1:00 with Flame water (see below).

- Diluent for ICP & FLAA standards. = Flame Water. Flame water is prepared by adding 100 ml concentrated nitric acid and 500 ml concentrated hydrochloric acid to 10 liters deionized water.

- Grade and quality of water required is ASTM Type II water (ASTM D1193): Water must be monitored for changes in conductivity by laboratory staff and is currently provided by a laboratory pure water system.

V. Procedure (see figure 4 for flow chart)

A. Preparation of Spike Solution for Matrix Spike Samples
Use the following chart for preparing matrix spiking solution:

Element	Stock Standard Conc.	mL of Stock Standard to use
Al	10000 ppm	4.0 ml
Ba	10000 ppm	4.0 ml
Be	1000 ppm	1.0 ml
Cd	1000 ppm	1.0 ml
Cr	1000 ppm	4.0 ml
Co	1000 ppm	10 ml

Cu	1000 ppm	10 ml
Fe	10000 ppm	2.0 ml
Mn	1000 ppm	10 ml
Ni	1000 ppm	10 ml
V	1000 ppm	10 ml
Zn	1000 ppm	10 ml

Dilute to 200 ml final volume with Flame water.

This solution must be documented in the Standards Logbook located in the metals lab. Log in GP-ID's for stock metal standards used in Matrix Spiking Solution preparation. A 1 ml aliquot of spiking stock is added to 100 ml of aqueous sample with a final digested volume of 100 ml. After the flame spike is prepared, label the bottle with analysts initials, preparation date, and page number of standard logbook. This page number shall be noted on the digestion logsheets.

B. Sample Digestion Procedure

1. Mix the sample thoroughly to achieve homogeneity. Transfer 100 ml of sample using a graduated cylinder to a beaker. Transfer 100 ml of sample each for duplicate and matrix spike analysis and label as duplicate and matrix spike.

2. To the matrix spike beaker, add 1 ml of matrix spike solution and 1 ml of 10 ppm antimony solution.

3. Label one empty beaker "LSCW" for the laboratory control sample. Add 100 ml ASTM type II water and 1 ml of ICVA solution. Add 1 ml of 10 ppm antimony solution.

4. Label one empty beaker "PBW" for the preparation blank. Add 100 ml ASTM type II water.

5. To all beakers, add 2 ml of concentrated nitric acid (HNO_3) and 5 ml of concentrated hydrochloric acid. Cover the samples with watch glasses and heat on a hot plate in the fume hood to 95°C until volume has been reduced to 15-20 ml or 2 hours. Do not boil. Remove beaker from hot plate and allow to cool.

6. After cooling, filter sample if necessary through Whatman No. 41 filter paper (or equivalent) using disposable funnel. Dilute to 100 ml in volumetric flask with Type II water. NOTE: In place of filtering, the sample may be centrifuged or allowed to settle by gravity overnight to remove insoluble material. Filter or centrifuge the sample only when sample contains insoluble materials that may clog the nebulizer. The diluted digestate solution contains approximately 5% (v/v) $_{HCL}$ and 2% HNO3. Transfer to 250 ml plastic sample bottle and label with GP work order, fraction, WFL (for water matrix, flame/ICP

digestion) and date of digestion. Date of digestion may be put on the box of digestates instead of on each bottle. For analysis, withdraw aliquots of approximate volume, and add any required reagent or matrix modifier. The sample is now ready for analysis.

VI. Quality Control

A. Troubleshooting and corrective action.

The furnace, ICP and flame AA operators should report to his/her supervisor and lab manager any recoveries outside warning limits for LCS samples for analytes being determined. Sample recoveries for any element which are outside of the control established limits for the laboratory control sample, are deemed unacceptable. The digestion batch must be redigested for those analytes. Document the incident on a redigestion form and submit to supervisor.

Other items pertaining to quality control are addressed in Section V.

VII. Safety

1. Safety equipment required

Fume hood - minimum flow of 100 linear feet/minute
Safety glasses
Safety gloves (unpowdered)
Lab apron
Face shield if necessary

2. Potential hazards

The most hazardous chemical acids that laboratory personnel are likely to encounter are strong acids such as Hydrochloric Acid and Nitric Acid (HNO_3).

3. Special handling requirements

Analysts should always read the label on the bottle. Chemicals require handling with care to include wearing adequate garments for skin protection. Also, acid use should be performed under a ventilated hood.

VIII. Disposal Requirements

A. Acid wastes should be placed into the acid waste bottle which is located under the sink in the metals digestion lab. Any remaining samples should be returned to sample control. More details concerning disposal characteristics and procedures can be located in the SOP 9.1 "Analytical Division Laboratory Waste Handling and Disposal Procedure".

IX. Reporting Requirements

A. Documentation to include Work Orders and Work Sheets (see SOP 7.3, Sample Logging and Record Keeping), Sample Description Forms (Figure 2), and the Metal Digestion Log Forms (Figure 3) must be submitted to the Metals Supervisor with the Digestion Technician's initials and the preparation date documented on each form for each case.

B. Sample Description Forms must be filled out for any work order of type VI or VII (see comment section on work order) and should contain the following information for aqueous digestates. The fields for color and clarity, before and after digestion, must be completed. The following descriptive terms are recommended:

Color - red, blue, yellow, green, orange, violet, white, colorless, brown, grey, black

Clarity - clear, cloudy, opaque

Note any significant changes that occur during sample preparation (i.e., emulsion formation) in the Comments section. Enter any sample-specific comments concerning the analyte results in the comments section.

C. Metal Digestion Log Forms must be documented completely by the Digestion Technician during digestion include the date of digestion, work order number, client name, digestion technician signature, digestion supervisor approval, identification of method or SOP used, client ID, GP fraction ID, sample matrix (soil/water), amount of sample used in digestion and final volume of sample, identification of the matrix spiking solution used and the amount used.

D. QC records are maintained in the form of control charts to document percent recovery of analytes from EPA ICV and independent laboratory control samples subjected to the digestion procedure. See SOP 3.12, Quality Control Charts for more information.

Figure 1

Standards Preparation Log

GP ENVIRONMENTAL SERVICES ***** METALS WORKING STANDARDS LOGBOOK

Document Control No.: GP163 Page No.: 315

Type : _____ Date Prepared: _____ Initials: _____

Matrix: _____ Date of Expiration: _____ Supervisor: _____

Element	A Starting Conc(ppm)	B Volume Added(ml)	C Final Volume(ml)	AxB/C Final Conc(ppm)	Std Source page # or (GP ID no)	Date of Expire
Zinc					Zn	
Beryllium					Be	
Cadmium					Cd	
Manganese					Mn	
Barium					Ba	
Cobalt					Co	
Copper					Cu	
Vanadium					V	
Chromium					Cr	
Nickel					Ni	
Iron					Fe	
Aluminum					Al	
Magnesium					Mg	
Calcium					Ca	
Arsenic					As	
Selenium					Se	
Silver					Ag	
Lead					Pb	
Thallium						

Comments: _____

Figure 2

Sample Description Form

GP ENVIRONMENTAL SERVICES
SAMPLE DESCRIPTION FORM

ate of Digestion : _____
Work Order Number : _____
ase Number : _____ SAS # : _____
DG Number : _____
repared By : _____ Date : _____
Page 158 : _____ Date : _____

			SOIL		WATER			SOIL & WATER	
CLIENT ID	GP ID	MATRIX	ARTIFACT DESCRIPTION	TEXTURE	pH	CLARITY BEFORE	CLARITY AFTER	COLOR BEFORE	COLOR AFTER

Comments:

Figure 3

Metals Digestion Form

GP ENVIRONMENTAL SERVICES METALS DIGESTION LOG, Part A

Date.:_____ Document Control No.: GP151 ____ of ____

Analyst:_____ Approved: _____ EPA SAS No :_____ EPA SDG No.:_____

This digestion batch contains samples from the following workorders:

CPWorkorder	Clientcode	Type	GP SDG#	Comments (Matrix, Rush, Redigestion,etc)

QA/QC: Identify methods, reagent sources by lot#, & laboratory control sample

Category	Flame/ICP	Furnace	Other:_____
Method Used			
Prep Blank			
Laboratory Control Sample Source(lot#)/Amount added Source / Amount added(mL) Source / Amount added(mL)			
Spiked sample ID: Vol(mL)/GP Spike log pg# Vol(mL)/GP Spike log pg# Vol(mL)/GP Spike log pg#			
Spiked sample ID: Vol(mL)/GP Spike log pg# Vol(mL)/GP Spike log pg# Vol(mL)/GP Spike log pg#			
Second Spike Sample ID: Vol(mL)/GP Spike log pg# Vol(mL)/GP Spike log pg# Vol(mL)/GP Spike log pg#			

HNO3 ACID LOT#_____ HCl Lot# _____ Peroxide Lot# _____

Comments:_____

GP ENVIRONMENTAL SERVICES METALS DIGESTION LOG FORM, part B

Date.:_____ Document Control No.: GP151 ____ of ____

CPWORKORDER	FRAC	CLIENT SAMPLE ID	MATRIX	ICP/FLAME SIZE ___	FINAL VOL(mL)	FURNACE SIZE___	FINAL VOL(mL)

GP ENVIRONMENTAL SERVICES

Figure 4

ACID DIGESTION OF SURFACE AND GROUND WATER SAMPLES FOR FLAME/ICP ANALYSIS AND FURNACE ANALYSIS OF SB

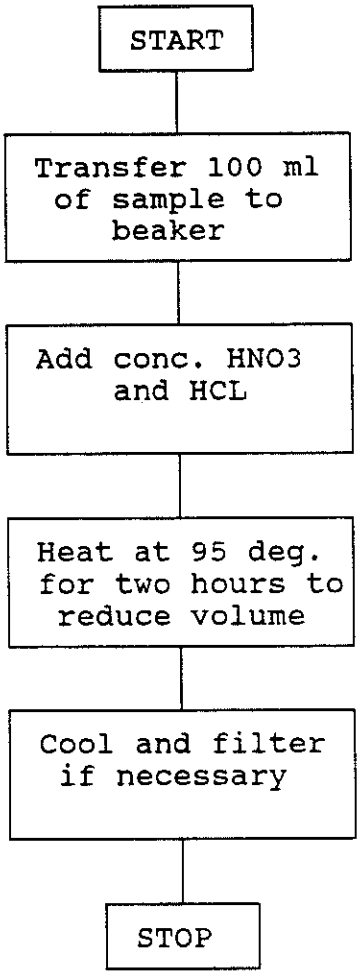

GP ENVIRONMENTAL SERVICES

Effective Date: July 27, 1995
Version Number: 1.0
Initiated By :
Approved By :

SOP No.: 11.37

Title : Acid Digestion of Surface and Ground Water Samples for Furnace Analysis in Accordance with SW 846 Method 3020A.

Scope : The method detailed in this procedure is performed to prepare aqueous samples for quantitation of certain metallic analytes using Graphite Furnace Atomic Absorption (GFAA) spectroscopy in accordance with SW 846 method 3020A.

I. Purpose

The method detailed in this procedure is used to prepare aqueous samples for analysis using a Graphite Furnace Atomic Absorption Spectrophotometer (GFAA). The sample holding time before digestion is 180 days. Samples must be stored in refrigerator at 4°C until time of preparation. The elements to be analyzed using this procedure are:

GFAA Elements

As
Pb
Se
Ag
Tl

This method is also applicable to other metals.

II. References

SW 846 method 3020A revision 1

III. Equipment and Supplies

- 250 ml teflon beakers
- 100 ml volumetric flasks
- Hot plate
- Whatman No. 41 filter paper
- 250 ml sample bottle (plastic)
- Watch glass
- Plastic disposable funnels
- Thermometer, calibrated, NBS traceable
- Fume hood
- Eppendorf and Oxford pipettors (calibrated)
- 100 ml graduated cylinders

IV. Reagents

- Concentrated Nitric Acid - trace metals grade
- Metals Standards - commercially prepared NBS traceable metals standards with documented concentrations, including impurities and expiration dates (Vendor: High Purity Standards, Charleston, SC).
- Diluent for furnace standards. = Furnace Water. Furnace water is prepared by adding 125 ml of concentrated nitric acid to 60 ml hydrogen peroxide (30%) to 5 liters of distilled water, then to a final volume of 10 liters.
- Grade and quality of water required is ASTM Type II water (ASTM D1193): Water must be monitored for changes in conductivity by laboratory staff and is currently provided by a laboratory pure water system.

V. Procedure

A. Preparation of Furnace Soil Spike Solution for Matrix Spike Samples
Use the following chart for preparing matrix spiking stock solution:

Element	Stock Std Concentration	mL of Stock Standard to Use
As	1000 ppm	0.8 ml
Se	1000 ppm	0.2 ml
Pb	1000 ppm	0.4 ml
Tl	1000 ppm	1.00 ml
Ag	1000 ppm	1.00 ml

Dilute to 200 ml with Furnace water.

1 ml aliquot of spiking solution is used to spike 100 ml of aqueous sample with a final digestion volume of 100 ml. This solution shall be documented in the Standards Log Book located in the metals lab. Record lot numbers for stock metal standards used in Matrix Spike preparation. This page number, date of preparation, date of expiration and initials shall be written on the side of the bottle for this matrix spike. This page number shall be noted on digestion logsheets.

B. Sample Digestion Procedure

1. Mix the sample thoroughly to achieve homogeneity. Transfer 100 ml of sample using a graduated cylinder to a beaker. Transfer 100 ml of sample each for duplicate and matrix spike analysis and label as duplicate and matrix spike.

2. To the matrix spike beaker, add 1 ml of matrix spike solution.

3. Label one empty beaker "LSCW" for the laboratory control sample. Add 100 ml ASTM type II water and 1 ml of ICVC solution.

4. Label one empty beaker "PBW" for the preparation blank. Add 100 ml ASTM type II water.

5. To all beakers, add 3 ml of concentrated nitric acid (HNO_3). Cover the samples with watch glasses and heat on a hot plate in the fume hood until volume has been reduced to approximately 5 ml. Do not boil. Cool the beakers and add 3 more mls of concentrated nitric acid. Cover the beaker and heat until a gentle reflux action occurs.

6. Continue heating and adding acid as necessary until the sample is light in color. Evaporate to a low volume. Remove the beaker and add 10 ml of ASTM type II water, mix and continue to warm for 10-15 minutes.

7 Remove beaker from hot plate and allow to cool.

8. After cooling, filter sample if necessary through Whatman No. 41 filter paper (or equivalent) using disposable funnel. Dilute to 100 ml in volumetric flask with Type II water. NOTE: In place of filtering, the sample may be centrifuged or allowed to settle by gravity overnight to remove insoluble material. Filter or centrifuge the sample only when sample contains insoluble materials that may clog the nebulizer. The diluted digestate solution contains approximately 3% HNO3. Transfer to 250 ml plastic sample bottle and label with GP work order, fraction, WFN (for water matrix, furnace digestion) and date of digestion. Date of digestion may be put on the box of digestates instead of on each bottle. For analysis, withdraw aliquots of approximate volume, and add any required reagent or matrix modifier. The sample is now ready for analysis.

VI. Quality Control

A. Troubleshooting and corrective action.

The furnace operators should report to his/her supervisor and lab manager any recoveries outside warning limits for LCS samples for analytes being determined. Sample recoveries for any element which are outside of the control established limits for the laboratory control sample, are deemed unacceptable. The digestion batch must be redigested for those analytes. Document the incident on a redigestion form and submit to supervisor.

Other items pertaining to quality control are addressed in Section V.

VII. Safety

1. Safety equipment required

Fume hood - minimum flow of 100 linear feet/minute
Safety glasses
Safety gloves (unpowdered)
Lab apron
Face shield if necessary

2. Potential hazards

The most hazardous chemical acids that laboratory personnel are likely to encounter are strong acids such as Hydrochloric Acid and Nitric Acid (HNO_3).

3. Special handling requirements

Analysts should always read the label on the bottle. Chemicals require handling with care to include wearing adequate garments for skin protection. Also, acid use should be performed under a ventilated hood.

VIII. Disposal Requirements

A. Acid wastes should be placed into the acid waste bottle which is located under the sink in the metals digestion lab. Any remaining samples should be returned to sample control. More details concerning disposal characteristics and procedures can be located in the SOP 9.1 "Analytical Division Laboratory Waste Handling and Disposal Procedure".

IX. Reporting Requirements

A. Documentation to include Work Orders and Work Sheets (see SOP 7.3, Sample Logging and Record Keeping), Sample Description Forms (Figure 2), and the Metal Digestion Log Forms (Figure 3) must be submitted to the Metals Supervisor with the Digestion Technician's initials and the preparation date documented on each form for each case.

B. Sample Description Forms must be filled out for any work order of type VI or VII (see comment section on work order) and should contain the following information for aqueous digestates. The fields for color and clarity, before and after digestion, must be completed. The following descriptive terms are recommended:

Color - red, blue, yellow, green, orange, violet, white, colorless, brown, grey, black

Clarity - clear, cloudy, opaque

Note any significant changes that occur during sample preparation (i.e., emulsion formation) in the Comments section. Enter any sample-specific comments concerning the analyte results in the comments section.

C. Metal Digestion Log Forms must be documented completely by the Digestion Technician during digestion include the date of digestion, work order number, client name, digestion technician signature, digestion supervisor approval, identification of method or SOP used, client ID, GP fraction ID, sample matrix (soil/water), amount of sample used in digestion and final volume of sample, identification of the matrix spiking solution used and the amount used.

D. QC records are maintained in the form of control charts to document percent recovery of analytes from EPA ICV and independent laboratory control samples subjected to the digestion procedure. See SOP 3.12, Quality Control Charts for more information.

Figure 1

Standards Preparation Log

GP ENVIRONMENTAL SERVICES ***** METALS WORKING STANDARDS LOGBOOK

Document Control No.: GP/63 Page No.: 315

Type : _____ Date Prepared: _____ Initials: _____

Matrix: _____ Date of Expiration: _____ Supervisor: _____

Element	A Starting Conc(ppm)	B Volume Added(ml)	C Final Volume(ml)	AxB/C Final Conc(ppm)	Std Source page # or (GP ID no)	Date of Expire
Zinc					Zn	
Beryllium					Be	
Cadmium					Cd	
Manganese					Mn	
Barium					Ba	
Cobalt					Co	
Copper					Cu	
Vanadium					V	
Chromium					Cr	
Nickel					Ni	
Iron					Fe	
Aluminum					Al	
Magnesium					Mg	
Calcium					Ca	
Arsenic					As	
Selenium					Se	
Silver					Ag	
Lead					Pb	
Thallium						

Comments: _____

Figure 2

Sample Description Form

GP ENVIRONMENTAL SERVICES
SAMPLE DESCRIPTION FORM

ate of Digestion :
/ork Order Number :
ase Number :
DG Number :
repared By :
P Log # 158 :

SAS # :
Date :
Date :

			SOIL		WATER		SOIL & WATER		
CLIENT ID	GPID	MATRIX	ARTIFACT DESCRIPTION	TEXTURE	pH	CLARITY BEFORE	CLARITY AFTER	COLOR BEFORE	COLOR AFTER

Comments:

Figure 3

Metals Digestion Form

GP ENVIRONMENTAL SERVICES METALS DIGESTION LOG, Page A

Date.:_____ Document Control No.: GP151 ____ of ____

Analyst:_____ Approved: _____ EPA SAS No.:_____ EPA SDG No.:_____

This digestion batch contains samples from the following workorders:

GPWorkorder	ClientcodeType	GP SDG#	Comments:(Matrix, Rush, Redigestion,etc)

QA/QC: Identify methods, reagent sources by lot#, & laboratory control sample

Category	Flame/ICP	Furnace	Other:_____
Method Used			
Prep Blank			
Laboratory Control Sample Source(Lot#)/Amount added Source / Amount added(mL) Source / Amount added(mL)			
Spiked sample ID: Vol(mL)/GP Spike Log # Vol(mL)/GP Spike Log # Vol(mL)/GP Spike Log #			
Spiked sample ID: Vol(mL)/GP Spike Log # Vol(mL)/GP Spike Log # Vol(mL)/GP Spike Log #			
Second Spike Sample ID: Vol(mL)/GP Spike log # Vol(mL)/GP Spike log # Vol(mL)/GP Spike log #			

HNO3 ACID LOT#_____ HCl Lot#_____ Peroxide Lot#_____

Comments:_____

GP ENVIRONMENTAL SERVICES METALS DIGESTION LOG FORM, page B

Date.:_____ Document Control No.: GP151 ____ of ____

GPWORKORDER	FRAC	CLIENT SAMPLE ID	MATRIX	ICP/FLAME SIZE ____	FINAL VOL(mL)	FURNACE SIZE ____	FINAL VOL(mL)

Figure 4

ACID DIGESTION OF AQUEOUS SAMPLES OR EXTRACT FOR FURNACE ANALYSIS

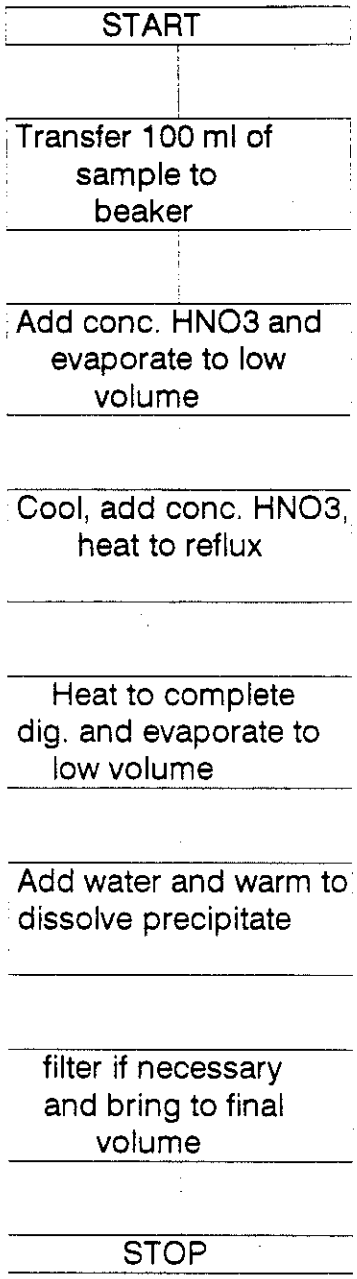

GP ENVIRONMENTAL SERVICES

Effective Date: July 27, 1995
Version Number: 1.0
Initiated By :
Approved By :

SOP No.: 11.35

Title : Acid Digestion of Soil, Sludge, Sediment, and Other Solid Waste Samples for Flame/ICP and Furnace Analyses in Accordance with SW 846 Method 3050A.

Scope : The method detailed in this procedure is performed to prepare soil, sediment, sludge and other solid samples for quantitation of certain metallic analytes using Inductively Coupled Plasma (ICP), Flame Atomic Absorption (FLAA), or Graphite Furnace Atomic Absorption spectroscopy in accordance with SW 846 method 3050A.

I. Purpose

The method detailed in this procedure is used to prepare solid waste samples for analysis using an Inductively Coupled Plasma (ICP) spectrophotometer, a Flame Atomic Absorption (FLAA) spectrophotometer, or a Graphite Furnace Atomic Absorption (GFAA) spectrophotometer. The sample holding time before extraction is 180 days. Samples must be stored in refrigerator at 4°C until time of preparation. The elements to be analyzed using this procedure are:

ICP Elements	FLAA Elements	GFAA Elements
Al	K	As
Ba	Na	Se
Be		Tl
Cd		Pb
Ca		Sb
Cr		Ag
Co		
Cu		
Fe		
Mg		
Mn		
Ni		
V		
Zn		

This method is also applicable to other metals.

II. References

SW 846 method 3050A revision 1

III. Equipment and Supplies

- 250 ml teflon beakers
- Analytical balance accurate to 0.001 grams
- 100 ml volumetric flasks
- Hot plate
- Whatman No. 41 filter paper
- 250 ml sample bottle (plastic)
- Watch glass
- Plastic disposable funnels
- Thermometer, calibrated, NBS traceable
- Fume hood
- Eppendorf and Oxford pipettors (calibrated)
- Teflon coated spatulas

IV. Reagents

- Concentrated Nitric Acid - trace metals grade

- 8M Nitric Acid - trace metals grade

- Concentrated Hydrochloric Acid - trace metals grade

- Metals Standards - commercially prepared NBS traceable metals standards with documented concentrations, including impurities and expiration dates (Vendor: High Purity Standards, Charleston, SC).

- 10 ppm Antimony standard - dilute 1000 stock Antimony standard 1:00 with Flame water (see below).

- 30% Hydrogen Peroxide

- Diluent for furnace standards. = Furnace Water. Furnace water is prepared by adding 125 ml of concentrated nitric acid to 60 ml hydrogen peroxide (30%) to 5 liters of distilled water, then to a final volume of 10 liters.

- Diluent for ICP & FLAA standards. = Flame Water. Flame water is prepared by adding 100 ml concentrated nitric acid and 500 ml concentrated hydrochloric acid to 10 liters deionized water.

- Grade and quality of water required is ASTM Type II water (ASTM D1193): Water must be monitored for changes in conductivity by laboratory staff and is currently provided by a laboratory pure water system.

- Solid laboratory control sample (Vendor: Environmental Resources Associates, Arvada, CO).

V. Procedure (see Figure 4 for flow chart)

A. Preparation of Furnace Soil Spike Solution for Matrix Spike Samples
Use the following chart for preparing matrix spiking stock solution:

Element	Stock Std Concentration	mL of Stock Standard to Use
As	1000 ppm	0.8 ml
Se	1000 ppm	0.2 ml
Pb	1000 ppm	0.4 ml
Tl	1000 ppm	1.00 ml
Ag	1000 ppm	1.00 ml

Dilute to 200 ml with Furnace water.

1 ml aliquot of spiking solution is used to spike 1 gram of soil with a final digestion volume of 100 ml. This solution shall be documented in the Standards Log Book located in the metals lab. Record lot numbers for stock metal standards used in Matrix Spike preparation. This page number, date of preparation, date of expiration and initials shall be written on the side of the bottle for this matrix spike. This page number shall be noted on digestion logsheets.

B. Preparation of ICP/FLAA Soil Spike Solution for Matrix Spike Samples
Use the following chart for preparing matrix spiking solution:

Element	Stock Standard Conc.	mL of Stock Standard to use
Al	10000 ppm	4.0 ml
Ba	10000 ppm	4.0 ml
Be	1000 ppm	1.0 ml
Cd	1000 ppm	1.0 ml
Cr	1000 ppm	4.0 ml
Co	1000 ppm	10 ml
Cu	1000 ppm	10 ml
Fe	10000 ppm	2.0 ml
Mn	1000 ppm	10 ml
Ni	1000 ppm	10 ml
V	1000 ppm	10 ml
Zn	1000 ppm	10 ml

Dilute to 200 ml final volume with Flame water.

This solution must be documented in the Standards Logbook located in the metals lab. Log in GP-ID's for stock metal standards used in Matrix Spiking Solution preparation. A 1 ml aliquot of spiking stock is added to 1 g of soil with a final digested volume of 100

ml. After the flame soil spike is prepared, label the bottle with analysts initials, preparation date, and page number of standard logbook. This page number shall be noted on the digestion logsheets.

C. Sample Digestion Procedure

1. Mix the sample thoroughly to achieve homogeneity using a teflon coated spatula. For each digestion procedure, weigh (to the nearest .01 g) a 1.0 g portion of sample and transfer to a beaker. (three beakers for flame/ICP analysis) soil; (three beakers for furnace analyses) soil; (four empty beakers for LCSS samples and preparation blanks).
   Note: A separate sample shall be dried for percent solids determination. See SOP 11.24, Percent Solids Determination Procedure.

2. Label two soil beakers, one as a duplicate and the second as a sample for ICP/flame analyses.

3. Label two soil beakers, one as a duplicate and the second as a sample for furnace analysis.

4. Label two remaining soil beakers as matrix spike furnace and matrix spike flame. <u>To matrix spike furnace beaker</u> add 1 ml of spiking solution (furnace soil spiking solution). <u>To matrix spike ICP/FLAA beaker</u> add 1 ml of flame spiking solution (ICP/FLAA soil spiking solution), and 1.0 ml of 10ppm Sb.

5. Take two empty beakers and add 1.0 ml each of deionized water and label as prep blank furnace and prep blank ICP.

6. Take the two remaining empty beakers and weigh out 1.0 gram ($\pm$ .01 g) of ERA laboratory control solid (record GP-ID) and label these as LCSS-ICP/FLAA and as LCSS-Furnace.

7. To all beakers, add 10 ml of 8 M nitric acid (HNO_3), mix the slurry, and cover with a watch glass. Heat the sample on a hot plate in the fume hood to 95°C and reflux for 10 minutes without boiling. Allow the sample to cool, add 5 ml of concentrated HNO_3, replace the watch glass, and reflux for 30 minutes. Repeat this step. Do not allow the volume to be reduced to less than 5 ml while maintaining a covering of solution over the bottom of the beaker.

8. After the second reflux step has been completed and the sample has cooled, add 2 ml of Type II water and 3 ml of 30% hydrogen peroxide (H_2O_2). Return the beaker to the hot plate to warm to start the peroxide reaction. Care must be taken to ensure that losses do not occur due to excessively vigorous effervescence. Heat until effervescence subsides, and cool the beaker.

9. Continue to add 30% H_2O_2 in 1 ml aliquots with warming until the effervescence is minimal or until the general sample appearance is unchanged. (NOTE: Do not add more than a total of 10 ml 30% H_2O_2.)

10. Final reflux, cooling and transfer.

    a. Furnace Analyses [1]

    When the sample is being prepared for furnace analyses of As, Be, Cd, Cr, Co, Cu, Fe, Pb, Mn, Ni, Se, Ag, Tl, Sb, V, and Zn, continue heating the acid-peroxide digestate until the volume has been reduced to approximately 5 ml, add 10 ml of Type II water, and warm the mixture. After cooling, filter sample through Whatman No. 41 filter paper (or equivalent) using disposable funnel and dilute to 100 ml with Type II water (or centrifuge the sample). NOTE: In place of filtering, the sample (after dilution and mixing) may be centrifuged or allowed to settle by gravity overnight to remove insoluble material. The diluted digestate solution contains approximately 2% (v/v) HNO_3. Transfer to 250 ml plastic sample bottle and label with GP work order, fraction, SFN (for soil matrix, furnace digestion) and date of digestion. Date of digestion may be put on the box of digestates instead of on each bottle. For analysis, withdraw aliquots of approximate volume, and add any required reagent or matrix modifier. The sample is now ready for analysis.

    b. Flame Analyses [1]

    When the sample is being prepared for the furnace AA analysis of Sb, the flame AA or ICP analysis of Al, Ba, Be, Ca, Cd, Cr, Co, Cu, Fe, Pb, Mg, Mn, Ni, K, Ag, Na, Tl, V, and Zn, add 5 ml of concentrated HCl and 10 ml of Type II water, return the covered beaker to the hot plate, and heat for an additional 15 minutes. After cooling, filter through Whatman No. 41 filter paper (or equivalent) using disposable funnel and dilute to 100 ml with Type II water. NOTE: In place of filtering, the sample (after dilution and mixing) may be centrifuged

---

[1] - As in the acid digestion for aqueous samples procedures, remember to pre-wet filter with 1% nitric acid and to mix samples completely between volumetric flasks and sample bottle containers (See comment concerning this in SOP 11.1 and 11.2). See Standard Operating Procedure for Acid digestion of aqueous samples for furnace or ICP/flame analysis.

or allowed to settle by gravity overnight to remove insoluble material. The diluted sample has an approximate acid concentration of 2.5% (v/v) HCl and 5% (v/v) HNO_3. Transfer the sample diluted sample to a 250 ml plastic sample bottle labeled with the GP work order, fraction, SFL (for soil matrix and flame/ICP digestion) and date of digestion. Date of digestion may by put on the box of digestates instead of on each bottle. The sample is now ready for analysis.

VI. Quality Control

A. Troubleshooting and corrective action.

The furnace, ICP and flame AA operators should report to his/her supervisor and lab manager any recoveries outside warning limits for LCS samples for analytes being determined. Sample recoveries for any element which are outside of the control established limits for the laboratory control sample, are deemed unacceptable. The digestion batch must be redigested for those analytes. Document the incident on a redigestion form and submit to supervisor.

Other items pertaining to quality control are addressed in Section V.

VII. Safety

1. Safety equipment required

Fume hood - minimum flow of 100 linear feet/minute
Safety glasses
Safety gloves (unpowdered)
Lab apron
Face shield if necessary

2. Potential hazards

The most hazardous chemical acids that laboratory personnel are likely to encounter are strong acids such as Hydrochloric Acid and Nitric Acid (HNO_3).

3. Special handling requirements

Analysts should always read the label on the bottle. Chemicals require handling with care to include wearing adequate garments for skin protection. Also, acid use should be performed under a ventilated hood.

VIII. Disposal Requirements

A. Acid wastes should be placed into the acid waste bottle which is located under the sink in the metals digestion lab. Any remaining samples should be returned to sample control. More details concerning disposal characteristics and procedures can be located in the SOP 9.1 "Analytical Division Laboratory Waste Handling and Disposal Procedure".

IX. Reporting Requirements

A. Documentation to include Work Orders and Work Sheets (see SOP 7.3, Sample Logging and Record Keeping), Sample Description Forms (Figure 2), and the Metal Digestion Log Forms (Figure 3) must be submitted to the Metals Supervisor with the Digestion Technician's initials and the preparation date documented on each form for each case.

B. Sample Description Forms must be filled out for any work order of type VI or VII (see comment section on work order) and should contain the following information for aqueous digestates. The fields for color and clarity, before and after digestion, must be completed. The following descriptive terms are recommended:

Color - red, blue, yellow, green, orange, violet, white, colorless, brown, grey, black

Clarity - clear, cloudy, opaque

Note any significant changes that occur during sample preparation (i.e., emulsion formation) in the Comments section. Enter any sample-specific comments concerning the analyte results in the comments section.

C. Metal Digestion Log Forms must be documented completely by the Digestion Technician during digestion include the date of digestion, work order number, client name, digestion technician signature, digestion supervisor approval, identification of method or SOP used, client ID, GP fraction ID, sample matrix (soil/water), amount of sample used in digestion and final volume of sample, identification of the matrix spiking solution used and the amount used.

D. QC records are maintained in the form of control charts to document percent recovery of analytes from EPA ICV and independent laboratory control samples subjected to the digestion procedure. See SOP 3.12, Quality Control Charts for more information.

Figure 1

Standards Preparation Log

GP ENVIRONMENTAL SERVICES ***** METALS WORKING STANDARDS LOGBOOK

Document Control No.: GP163 Page No.: 315

Type : _____ Date Prepared: _____ Initials: _____

Matrix: _____ Date of Expiration: _____ Supervisor: _____

Element	A Starting Conc(ppm)	B Volume Added(ml)	C Final Volume(ml)	AxB/C Final Conc(ppm)	Std Source page # or (GP ID no)	Date of Expire
Zinc					Zn	
Beryllium					Be	
Cadmium					Cd	
Manganese					Mn	
Barium					Ba	
Cobalt					Co	
Copper					Cu	
Vanadium					V	
Chromium					Cr	
Nickel					Ni	
Iron					Fe	
Aluminum					Al	
Magnesium					Mg	
Calcium					Ca	
Arsenic					As	
Selenium					Se	
Silver					Ag	
Lead					Pb	
Thallium						

Comments: _____

Figure 2

Sample Description Form

GP ENVIRONMENTAL SERVICES
SAMPLE DESCRIPTION FORM

ate of Digestion : _____
/ork Order Number : _____
ase Number : _____ SAS # : _____
DG Number : _____
repared By : _____ Date : _____
GP Log # 158 : _____ Date : _____

			SOIL		WATER		SOIL & WATER		
CLIENT ID	GPID	MATRIX	ARTIFACT DESCRIPTION	TEXTURE	pH	CLARITY BEFORE	CLARITY AFTER	COLOR BEFORE	COLOR AFTER

Comments:

Figure 3

Metals Digestion Form

GP ENVIRONMENTAL SERVICES METALS DIGESTION LOG, Part A

Date.:_____ Document Control No.: GP151 ____ of ____

Analyst:_____ Approved: _____ EPA SAS No.:_____ EPA SDG No.:_____

This digestion batch contains samples from the following workorders:

GPWorkorder	Clientcode	Type	GP SDG#	Comments:(Matrix, Rush, Redigestion,etc)

QA/QC: Identify methods, reagent sources by lot#, & laboratory control sample

Category	Flame/ICP	Furnace	Other:_____
Method Used			
Prep Blank			
Laboratory Control Sample Source(lot#)/Amount added Source / Amount added(mL) Source / Amount added(mL)			
Spiked sample ID: Vol(mL)/GP Spike log pg# Vol(mL)/GP Spike log pg# Vol(mL)/GP Spike log pg#			
Spiked sample ID: Vol(mL)/GP Spike log pg# Vol(mL)/GP Spike log pg# Vol(mL)/GP Spike log pg#			
Second Spike Sample ID: Vol(mL)/GP Spike log pg# Vol(mL)/GP Spike log pg# Vol(mL)/GP Spike log pg#			

HNO3 ACID LOT#_____ HCl Lot# _____ Peroxide Lot# _____

Comments:_____

GP ENVIRONMENTAL SERVICES METALS DIGESTION LOG FORM, part B

Date.:_____ Document Control No.: GP151 ____ of ____

GPWORKORDER	FRAC	CLIENT SAMPLE ID	MATRIX	ICP/FLAME SIZE ____	FINAL VOL(mL)	FURNACE SIZE___	FINAL VOL(mL)

GP ENVIRONMENTAL SERVICES

Figure 4
ACID DIGESTION OF SOILS, SEDIMENTS, AND SLUDGES

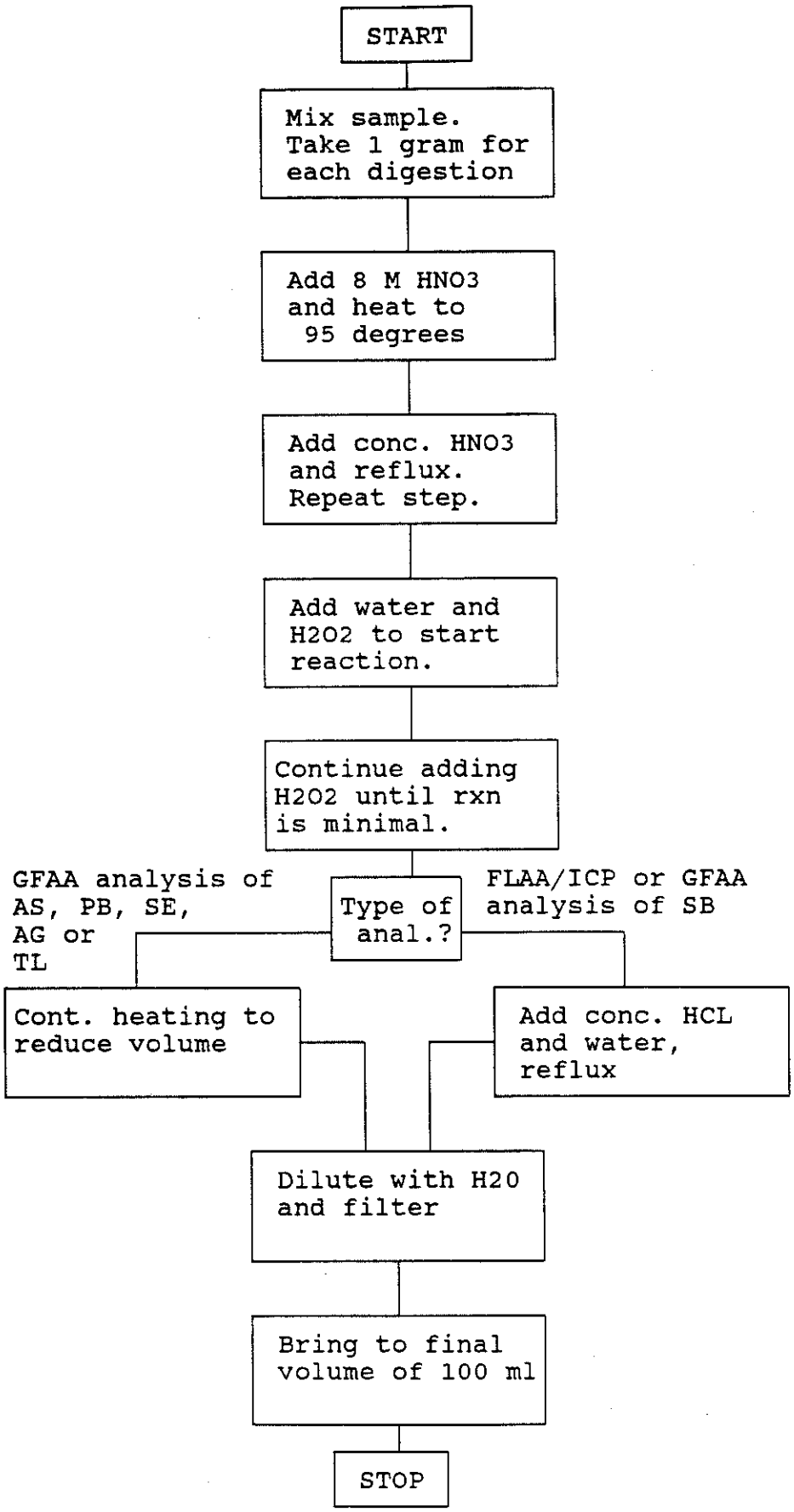

Effective Date: July 27, 1995
Version Number: 1.0
Initiated By :
Approved By :

SOP No.: 11.38

Title : ICP Operation, Calibration and Quantitation of HSL Metals

Scope : The method detailed in this procedure is for the analysis of water, TCLP and EP extracts, soils, sludges, sediments and other solid wastes digestates for Hazardous Substance List (HSL) Metals by Inductively Coupled Plasma (ICP) spectroscopy in accordance with USEPA method 6010A.

I. Purpose

The purpose of this procedure is to describe the sequential analysis of metals on the USEPA Hazardous Substances List (Aluminum, Barium, Beryllium, Cadmium, Calcium, Chromium, Cobalt, Copper, Iron, Magnesium, Manganese, Nickel, Vanadium, and Zinc) by ICP. All samples are digested in accordance with SOP 11.35 or 11.36 prior to analysis. The digestate holding time is 180 days. This method can also be used for other metals which are not listed in the USEPA Hazardous Substances List.

II. References

Perkin-Elmer ICP/6000 Operator's Manual

SW 846 method 6010A revision 1

III. Equipment and Supplies

A.
- 100 mL volumetric flasks
- 500 mL volumetric flasks
- 1000 mL volumetric flasks
- 100 mL plastic storage bottles
- 500 mL plastic storage bottles
- 20.0 L Nalgene carboy
- 10.0 L Nalgene carboy
- 1000 mL graduated cylinder
- 200 mL graduated cylinders
- 15 mL disposable centrifuge tubes
- Centrifuge tube holder
- Pipetters and Pipette Tips
  - 1.000 mL Rainin
  - .1000 mL Eppendorf
- 5 and 10 mL glass pipets
- Pump Tubing (Fisher Brand, Accu-rated)
- Argon gas (cryogenic liquid source)

B. Instrumentation

Perkin-Elmer ICP model 6000 with pneumatic nebulizer or Perkin-Elmer ICP Model 6500 with Type II torch and ceramic injector, both with Perkin-Elmer Laboratory Computer and printer.

Peristaltic Pump

IV. Reagents

Deionized water ASTM type II or equivalent

Concentrated hydrochloric acid, trace metals grade

Concentrated nitric acid, trace metals grade

Flame Water - 5% hydrochloric acid, 1% nitric acid

Preparation of flame water:

Fill a 20.0 L Nalgene carboy half full with type II water. Add 200 ml concentrated nitric acid and 1000 ml concentrated hydrochloric acid underneath a hood to contain noxious gases. Dilute to twenty liters with type II water and mix thoroughly.

2% nitric acid

Preparation of 2% nitric acid:

Fill a 10.0 L Nalgene carboy half full with type II water. Add 200 mL of concentrated nitric acid underneath a hood. Dilute to ten liters with type II water and mix thoroughly.

Standards - Metal plasma grade standards which are traceable to NBS standard reference materials; High Purity Standards brand or equivalent.

ICV, CCV and ICS quality control standards currently supplied by High Purity Standards. LCS quality control standard currently supplied by Environmental Resources Associates.

1 ppm Manganese Emission check solution

Preparation of Mn solution:

Pipet 0.5 mL of 1000 ppm Manganese stock solution into a 500 mL volumetric flask. Dilute to volume with flame water. Transfer to a bottle labelled 1 ppm Mn. Record the date of preparation, expiration date and preparers initials on the bottle label. Prepare Manganese emission check solution every three months or when depleted, whichever is more frequent.

GENERAL PRECAUTIONS

AVOID CONTAMINATION of STOCK STANDARDS. Always pour out a small volume of standard stock solution into a new microbeaker before taking an aliquot. NEVER insert a pipet directly into the bottle. This also applies to quality control standards stock solutions (ICVA, IC1, etc.)

Check pipetters daily for leaks and for proper calibration.

V. Procedure

A. Preparation of Calibration Standards

To prepare the calibration standard, Standard 1 in flame water, add the volumes of the certified standard solutions listed below with either pipetters or glass pipets to a 1000 mL volumetric flask which has been half filled with flame water. Dilute the flask to volume with flame water. Mix the solution thoroughly, and transfer it to a plastic bottle. Document the standard in the ICP Standards Logbook (figure 1). Label the standard solution bottle. The label should include the preparers initials, the date of preparation, the expiration date, and the page number on which the standard has been recorded in the log book. The expiration date of standard solutions is three months from the date of preparation or whenever one of the certified standards expires, whichever is first.

To prepare the calibration standard, Standard 1 in 2% nitric acid, follow the same procedure as with Standard 1 in flame water substituting 2% nitric acid for flame water.

To prepare the calibration standard, Standard 2 in flame water, add the volumes of the certified standard solutions listed below with either pipetters or glass pipets to a 500 mL volumetric flask which has been half filled with flame water. Dilute the flask to volume with flame water, mix the solution thoroughly, and transfer to a plastic bottle. Document and label the standard as described above.

To prepare the calibration standard, Standard 2 in 2% nitric acid, follow the same procedure as with Standard 2 in flame water substituting 2% nitric acid for flame water.

Element	Certified Std. Conc.	Volume Added	Calibration Std. Conc.
Standard 1			
Zinc	1000 ppm	5.0 mL	5.0 ppm
Beryllium	1000 ppm	0.6 mL	0.6 ppm
Cadmium	1000 ppm	1.0 mL	1.0 ppm
Manganese	1000 ppm	5.0 mL	5.0 ppm
Barium	1000 ppm	5.0 mL	5.0 ppm
Cobalt	1000 ppm	2.0 mL	2.0 ppm
Copper	1000 ppm	5.0 mL	5.0 ppm
Vanadium	1000 ppm	2.0 mL	2.0 ppm
Chromium	1000 ppm	1.0 mL	1.0 ppm
Nickel	1000 ppm	2.0 mL	2.0 ppm
Standard 2			
Iron	10000 ppm	2.5 mL	50.0 ppm
Aluminum	10000 ppm	2.5 mL	50.0 ppm
Magnesium	10000 ppm	2.5 mL	50.0 ppm
Calcium	10000 ppm	5.0 mL	100.0 ppm

B. QC Preparation

1. Preparation of Contract Required ICP Detection Limit (CRI) Stock Solution:

Fill a 100.0 mL volumetric flask halfway with flame water and add the following:

Element	Conc. (ppb)	Volume Std (mL)	Certified Stock Conc.
Be	1000	.1000	1000 ppm
Cd	1000	.1000	1000 ppm
Cr	2000	.2000	1000 ppm
Co	10.00	1.000	1000 ppm
Cu	5.000	.5000	1000 ppm
Mn	3.000	.3000	1000 ppm
Ni	8.000	.8000	1000 ppm
V	10.00	1.000	1000 ppm
Zn	4.000	.4000	1000 ppm

(Note: Fe, Al, Ba, Mg, Ca, need not be added.) Dilute to the mark with flame water and transfer to a storage bottle. Document the solution in the ICP Standards Log Book (figure 1). Label the bottle as ICP CRI Stock and record the preparation date, the expiration date, the preparers initials, and the page number on which the solution has been recorded in the log book on the label. Prepare fresh solution every three months or when one of the certified standards expires.

2. Initial Calibration Verification (ICV) and Continuing Calibration Verification (CCV):

   Fill a 100 mL volumetric flask halfway with flame water and add one mL of ICVA certified stock solution. Dilute the flask to volume with flame water. Mix the solution thoroughly and transfer to a plastic bottle labelled ICV. If undigested filtered samples or drinking water samples are to be analyzed, then prepare the ICV solution using 2% nitric acid instead of flame water. These solutions should be prepared fresh daily.

3. Interference Check Standard A (ICSA):

   Fill a 100 mL volumetric flask halfway with flame water and add 10 mL of IC2 certified stock solution. Dilute the flask to volume with flame water. Mix the solution thoroughly and transfer to a plastic bottle labelled ICSA. If undigested filtered samples or drinking water samples are to be analyzed, then prepare the ICSA solution using 2% nitric acid instead of flame water. These solutions should be prepared fresh daily.

4. Interference Check Standard AB (ICSAB):

   Fill a 100 mL volumetric flask halfway with flame water and add 10 mL of IC2 certified stock solution, and 0.100 mL of IC1 certified stock solution. Dilute the flask to volume with flame water. Mix the solution thoroughly and transfer to a plastic bottle labelled ICSAB. If undigested filtered samples or drinking water samples are to be analyzed, then prepare the ICSAB solution using 2% nitric acid instead of flame water. These solutions should be prepared fresh daily.

5. Contract Required Detection Limit Standard for ICP (CRI): Fill a 100 mL volumetric flask halfway with flame water and add 1 mL of CRI stock solution. Dilute the flask to volume with flame water. Mix the solution thoroughly and transfer to a plastic bottle labelled CRI. If undigested filtered samples or drinking water samples are to be analyzed, then prepare the CRI solution using 2% nitric acid instead of flame water. These solutions should be prepared fresh daily.

C. Preparation of 1:5 Serial Dilution (L)

Obtain the sample digestates for the case or SDG to be analyzed. Take the original sample digestate that corresponds to the sample designated for duplicate and matrix spike digestions for each SDG and matrix and prepare its serial dilution as follows:

Into a 15 mL centrifuge tube labelled (L), pipet the following:

2 mL of sample
8 mL of flame water

If undigested filtered samples or drinking water samples are to be analyzed, then prepare the serial dilution using 2% nitric acid instead of flame water. Prepare the serial dilution immediately before analysis.

D. Tuning and Calibration of the ICP

1. Conduct a pre-start up inspection.

a. Argon supply and drain vessel

Make sure there is an adequate supply of Argon. Check the float gauge in the liquid argon dewar which is located in the cylinder storage room. The line pressure regulator should be set at 60 psi.

Check the drain vessel beneath the ICP and empty it if full.

b. Torch box

Open the torch box and visually inspect the glass and RF load coils for cleanliness and any oxidation.

Make sure all connections are secure and air tight, including the drain hose, nebulizer cap, argon lines and cooling water inlet connections.

c. Peristaltic pump

Install new flexible pump tubing at least daily or if the old one shows signs of flattening or stretching, and connect to the nebulizer with capillary tubing. Pump DI water and adjust pressure on tension arm to obtain a smooth flow by letting an air bubble into the pump tubing and observing its flow.

2. Ignite the argon plasma.

a. Turn on the RF power supply by throwing the circuit breaker switch up and pressing the "CKTS ON" button on the RF power supply unit.

b. Turn on the cooling water.

c. On the torch box press the buttons corresponding to the plasma, nebulizer, and auxiliary gas flows. The buttons should illuminate when pressed. The gas flows should read approximately as follows:

plasma= 13.0 L/min
nebulizer= 0.40 L/min
auxiliary= 0.20 L/min

Close all doors on the torch box. The blue "RF OFF" button should illuminate indicating that all safety interlocks are closed and RF power unit is ready. Aspirate DI water and let the argon gas purge any air in the spray chamber for about 2 minutes.

d. Plasma ignition

Press the nebulizer flow button and wait for the flow to drop to zero, then press red "RF ON" button. The RF incident kilowatts meter should read 1.25 KW, but can be lower. The RF reflected watts reading will go off scale. Press and hold the white "ICP IGNITE" button to turn on the tesla coil, which should start a stable plasma. Immediately release the "ICP IGNITE" button and turn the nebulizer flow back on. The RF reflected watts reading should return to zero.

VERY IMPORTANT: if an unstable plasma should form, IMMEDIATELY turn off the RF power by pressing the blue "RF OFF" button or the plasma will melt the torch. Consult ICP 6000 manual pg. 7-5 for further details.

3. Optimize conditions and prepare for sample analysis.

a. It takes approximately 20 minutes for the plasma to reach thermal equilibrium. During this time the nebulizer system can be checked. Aspirate a 1000 ppm solution of sodium and observe the plasma. A conical orange "bullet" should appear just above injector. If the injector is ceramic, the top of the "bullet" should end 4-5 mm above the RF coils. If necessary, adjust the nebulizer flow by turning the knob below the nebulizer pressure regulator until this occurs.

b. Alignment check

On the spectrometer keypad press "CE". Then enter 257.6 followed by "λ slew". Aspirate the 1.000 ppm Manganese solution and observe the emission reading. With the gain set at 500, the emission reading should be about 1.200.

Align the torch box by moving it either slightly towards or away from the analyst until the signal is optimized.

c. BEC determination

1.) Using the keyboard controls of the spectrometer, set the following conditions:

PRINT - turned off. The red light beside the key should not be illuminated.

SLIT - L .02. This is displayed digitally on the keyboard.

CONT - turned on. The red light beside the key should be illuminated.

TIME - 0.2. This is displayed digitally on the keyboard.

EM - turned on. The red light beside the key should be illuminated.

SCAN + and SCAN -
- 0.2. This can be checked by pressing "CHK" and then either the "SCAN +" or "SCAN -" key. If it is not correct, key in .2 and press either the "SCAN +" or the "SCAN -" key.

GAIN - 600. This can be checked by pressing "CHK" and then "GAIN".

2.) Slew the monochromator to the low UV by entering 178 and pressing " SLEW".

3.) Press "AZ". This will set the instrument readout to zero for zero intensity.

4.) Aspirate the 1 ppm Mn solution. Set the monochromator to the Mn line at 257.610 nm by entering 257.6 on the keyboard and "SLEW".

5.) Find the top of the 257.610 nm Mn line by pressing "SCAN +" and "SCAN -" on and off very quickly in succession, so as to move the monochromator a very small amount at a time until a maximum reading is obtained. If the emission signal is too intense the instrument will display E03. If this occurs reset the photomultiplier voltage by pressing "GAIN". Also, if the signal is too weak, it can

be increased by pressing "GAIN". The instrument should read at least 1.200. When the signal is optimized, note the reading.

6.) Aspirate flame water until a minimum signal is reached and note the reading.

8.) Calculate the background equivalent concentration (BEC) by dividing the minimum reading by the difference between the maximum reading and the minimum reading.

BEC = min. reading/(max. reading-min. reading)

The calculated BEC should be .050 or less.

9.) Record the BEC in the ICP run log (figure 2).

10.) Press "HOLD" and "PRINT". THIS STEP MUST BE PREFORMED BEFORE CONTINUING.

d. Turn on the computer. Type idris and press "RETURN". At the login: prompt, type icp press "RETURN".

e. Graphics Calibration

Graphics calibration should be preformed at least monthly.

1.) First enter the element mode by pressing "Element" located on the top portion of the computer keyboard. Recall the desired element file by typing its name and pressing "Recall". The element file should show the date of the last graphics calibration.

2.) Enter graphics mode by pressing "Graphics". Recall the graphics file corresponding to the previous element file recalled by typing the element file name and then "recall". Aspirate the appropriate standard and press "Standard". Using the arrow keys move the cursor line until it crosses the maximum point of the peak and press " Calib". Move the curser to the position of the desired background point or background points with the arrow keys and press "Back Corr". Save the graphics file by pressing "Store".

3.) Enter element mode again by pressing "Element". The element file should now show the new background points and the new date of graphics calibration.

Save these changes by pressing "Store".

4.) Record any elements which have been recalibrated graphicly in the ICP run log (figure 2).

4. Calibration

a. Recall the desired method file by pressing "Utilities", followed by "Library Mode" and "List Method" which are indicated by the soft keys located below the computer screen. Move the curser to the desired method file and press "Recall". Type a run file name of eight symbols or less and press "Data name". Press "Run Manual" and follow the prompt on the computer screen.

b. Aspirate Standard 1 and press "Standard". When all the elements in the Standard 1 have been calibrated, wash the capillary tubing in the wash beaker and proceed according to the computer prompt. Aspirate Standard 2 and press the "Standard". Aspirate clean flame water for about two to three minutes and then press the "Blank". If undigested filtered samples are to be analyzed, follow this procedure using standards made up in 2% nitric acid and a 2% nitric acid blank instead of flame water.

E. Sample Analysis

To analyze a sample or quality control sample, aspirate the sample, enter the sample name, and press "Sample". If a sample concentration reads greater than the calibration standard for any element, then the sample must be diluted and the sample name should be followed by a colon which should be followed by the dilution factor.

The following sequence should be followed when analyzing samples by method 6010A:

Typical Analysis Sequence

LINEAR RANGE 1
LINEAR RANGE 2
ICV
ICB
ICSABI
CRI
PBW
PBS
LCSW
LCSS
SAMPLE
DUPLICATE
SPIKE
(POST DIG SPIKE)
CCV1
CCB1
SAMPLE:5
ICSABF
CCV2
CCB2

If the samples to be analyzed have been digested then all the calibration standards and quality control solutions used should be prepared using flame water. If the samples to be analyzed are undigested filtered samples or drinking water samples, then all the calibration standards and quality control standards used should be prepared using 2% nitric acid.

Record the analysis sequence, the instrument identification, the date, the analyst's name, the analyst's signature, the time of analysis initiation, and the work order numbers on the bench sheet (figure 3).

F. Quality Control Requirements

1. LINEAR RANGE

The linear range sample is run immediately after calibration when analyzing samples by method 6010. The linear range sample is the same solution that was used to calibrate the instrument. The linear range sample result should be within 5% of the true value. When measurements for any element exceed the control limits, the analysis is void for that element. The problem must be corrected and the samples reanalyzed.

2. ICV/CCV

The ICV is run immediately after calibration when analyzing samples by CLP method, or immediately after the linear range sample when running samples by method 6010. The CCV is run after every ten samples or every two hours. The ICV and CCV must be within 10% of the true value. When measurements for any element exceed the control limits the analysis is void for that element. The problem must be corrected and the samples reanalyzed.

Acceptance Criteria
ICV

Element	Control Limits (ppb)	True Value (ppb)
Aluminum	1800 - 2200	2000
Barium	450 - 550	500
Beryllium	90 - 110	100
Cadmium	450 - 550	500
Calcium	9000 - 11000	10000
Chromium	450 - 550	500
Cobalt	450 - 550	500
Copper	900 - 1100	1000
Iron	1800 - 2200	2000
Magnesium	9000 - 11000	10000
Manganese	450 - 550	500
Nickel	450 - 550	500
Vanadium	450 - 550	500
Zinc	450 - 550	500

3. ICB/CCB

The ICB and CCB are blank solutions. The ICB must be run immediately after the ICV. A CCB must be run immediately after each CCV. The absolute value of the ICB and CCB measurements should be less than or equal to the EPA CRDL (ILM03.01). Otherwise, the analysis is void for that element. The problem must be corrected and the samples reanalyzed.

Element	CRDL (ppb)
Aluminum	200
Barium	200
Beryllium	5
Cadmium	5
Calcium	5000
Chromium	10
Cobalt	50
Copper	25
Iron	100
Magnesium	5000
Manganese	15
Nickel	40
Vanadium	50
Zinc	20

4. ICSAB

The ICSA and ICSAB must be run at the beginning and end of each analysis run or at a minimum of twice per eight hour shift. ICSAB must be run immediately following ICSA. ICSA contains interferents. ICSAB contains analytes plus interferents. The ICSA and ICSAB measurements must be within 20% of the true values. If any element is outside this limit, then the analysis is void for that element. The problem must be corrected and the element should be reanalyzed.

Acceptance Criteria
ICSAB

Element	Control Limits (ppb)	True Value (ppb)
Aluminum	400000 - 600000	500000
Barium	400 - 600	500
Beryllium	400 - 600	500
Cadmium	800 - 1200	1000
Calcium	400000 - 600000	500000
Chromium	400 - 600	500
Cobalt	400 - 600	500
Copper	400 - 600	500
Iron	160000 - 240000	200000
Magnesium	400000 - 600000	500000
Manganese	400 - 600	500
Nickel	400 - 600	1000
Vanadium	400 - 600	500
Zinc	800 - 1200	1000

5. CRI

The CRI is to verify linearity near the CRDL. If samples are being run by method 6010, then the CRI must be run at least once during the analysis. Specific acceptance criteria currently do not exist.

6. PBW/PBS

The PBW and PBS are laboratory digested blanks. If any element concentration in the digested blank is above CRDL, then all the samples associated with that blank which have concentrations greater than the CRDL and less than ten times the blank concentration must be redigested and reanalyzed for that element. If any element concentration in the digested blank is less than the negative of the CRDL, then all samples associated with that blank must be reanalyzed.

7. LCSW/LCSS

The LCSW and LCSS are digested control samples. The LCSW measurements must be within 20% of the true values. If any element concentration in the LCS is outside the control limits, then all the samples associated with that LCS must be redigested and reanalyzed.

Acceptance Criteria
LCSW

Element	Control Limits (ppb)	True Value (ppb)
Aluminum	1600 - 2400	2000
Barium	400 - 600	500
Beryllium	80 - 120	100
Cadmium	400 - 600	500
Calcium	8000 - 12000	10000
Chromium	400 - 600	500
Cobalt	400 - 600	500
Copper	400 - 600	500
Iron	1600 - 2400	2000
Magnesium	8000 - 12000	10000
Manganese	400 - 600	500
Nickel	500 - 600	500
Vanadium	400 - 600	500
Zinc	400 - 600	500

Acceptance Criteria
LCSS

The manufactur (ERA) supplied control limits are used unless otherwise specified.

8. Duplicates

One duplicate must be analyzed for each matrix type in each group of samples. If an element concentration is greater than or equal to five times the CRDL, then the % RPD should be 20%.

$$\%RPD = \frac{\text{sample} - \text{dup}}{\frac{\text{sample} + \text{dup}}{2}} \times 100$$

9. Matrix Spike and Post Digestion Spike Samples

The spike sample analysis is designed to provide information regarding the digestion and methodology used for analysis. One spike is prepared for each matrix type in each group of samples. If the spike recovery for an element is less than 25% of the true value, and if the sample concentration corresponding to the spiked sample is less than four times the spike added, then a post digestion spiked sample must be run. The post digestion spike must be twice the sample concentration or twice the CRDL, whichever is greater. For purposes of calculating the % spike recovery, sample results less than the instrument detection limit (IDL), should be assumed to be zero.

Element	Aqueous (ppb)	Solid (ppb)
Aluminum	2000	not required
Barium	2000	2000
Beryllium	50	50
Cadmium	50	50
Calcium	not required	not required
Chromium	200	200
Cobalt	500	500
Copper	250	250
Iron	1000	not required
Magnesium	not required	not required
Manganese	500	500
Nickel	500	500
Vanadium	500	500
Zinc	500	500

8. Serial Dilution

One serial dilution is prepared for one sample of each matrix type in each group of samples. If the element concentration is fifty times the IDL or greater, then the % difference between the serial dilution and the sample should be 10%.

$$\% \text{ Difference} = \frac{\text{sample} - \text{dilution}}{\text{sample}} \times 100$$

G. Instrument Shut Down

1. Aspirate flame water for several minutes to clean nebulizer tips and spray chamber.

2. Press blue "RF OFF" button.

3. Stop the peristaltic pump and release the tension on tubing.

4. Turn off the gas flows.

5. Turn off the cooling water.

6. Flip the circuit breaker on the power unit down.

7. If no other instruments need argon, close valve on main liquid argon dewar in cylinder storage room.

8. Leave the ICP software by pressing "quit" followed by "Y".

9. To transfer data files to a floppy disk, insert a disc in the top disc drive. At the login: prompt type root. Type cd usr/as/data. Type wribm 0 followed by the file name of the data file to be transferred.

10. Before turning the computer off type shutdown, and wait for the "ok to power down" prompt.

H. Trouble shooting and corrective action

1. Problem: Stable plasma will not start.

   Action: Check the system for leaks. The Nebulizer pressure should be between 20 - 50 psi for ceramic injector with nebulizer gem tips. Check the quartz torch for oxidation or melting. A new torch may be needed, or torch o-rings may need replacement. It may help to raise the auxiliary flow to 0.6 L/m.

2. Problem: Standard emissions are different than normal readings.

   Action: ICP may not have reached thermal equilibrium. Check the plasma flow, the lower the flow the hotter the plasma and the higher the emissions for both the element and the background.

3. Problem: ICV fails for an element.

   Action: The instrument may need to be recalibrated. The graphics files may need to be recalibrated. The sample injection tip may need cleaning or replacement.

4. Problem: ICB fails for an element.

   Action: The instrument may need to be recalibrated. The graphics files may need to be recalibrated. New background points may need to be selected for the graphics and element files. One of the solutions or the spray chamber may be contaminated.

5. Problem: ICSA or ICSAB fails for an element.

   Action: The instrument or the graphics files may need to be recalibrated, or new background points may need to be selected for the graphics and element files.

VI. Safety

A. Equipment

1. Lab coat
2. Safety glasses
3. Gloves

B. Potential hazards

1. All samples and solutions are in 10-20% HCl and may contain high concentrations of metals a well. Safety glasses should be worn to protect the eyes from acid splashes. Gloves and lab coats should be worn to protect the hands and skin from spills or splatter. If any solution is spilled on the skin, wash the area immediately with plenty of water and notify a supervisor. If any solution is splashed in the eyes, rinse immediately and thoroughly in an eyewash basin and contact a supervisor immediately.

2. The ICP uses high voltage electricity and generates an RF field, so there is a potential risk of electrocution if shielding is circumvented. The Perkin-Elmer ICP has numerous safety interlocks to shut off power to the RF coils if there is a break in the shielding around the coils, if the supply of cooling water is lost, or if there is a loss of argon pressure.

   If there is a short in the ICP, immediately turn off the ICP by pressing the blue "RF OFF" button or by turning one of the

large red emergency knobs. Leave the room if any smoke is emanating from the ICP, since it may contain poisonous substances. Allow the smoke to dissipate before returning. Call Perkin-Elmer Service.

VII. Disposal Requirements

1. After analysis sample digestates must be held for six months, after which they are disposed of in accordance with the Hazardous Waste Disposal Procedure.

2. All other non hazardous solutions may be washed down the drain with copious amounts of water.

VIII. Reporting Requirements

1. The case number, date, instrument ID, analyst's initials, and page number or source of all standard and quality control solutions must be recorded on the first page of raw data.

2. The ICP run log (figure 2) must be filled out for each day's operations. The date, plasma flow, viewing height, nebulizer flow, nebulizer pressure, auxiliary flow, RF power, BEC must be recorded at the top of the page. In addition, each run must be recorded according to work orders, fraction numbers, data file name, elements completed, and analyst's initials. If any maintenance is preformed, it must be recorded in the spaces provided.

3. If any maintenance is performed, routine or non-routine, the Maintenance log for the affected ICP shall be filled out (figure 4). This shall accompany all field service reports.

4. Record all solutions made in the ICP Calibration Standards logbook (figure 1).

Table 1

Element	CRDL (µg/L)
Zinc	20
Cadmium	5
Cobalt	50
Nickel	40
Barium	200
Manganese	15
Iron	100
Chromium	10
Magnesium	5000 *
Vanadium	50
Aluminum	200
Beryllium	5
Calcium	5000 *
Copper	25

* - May also be performed by FLAA

FLAA = Flame Atomic Absorption

GFAA = Graphite Furnace Atomic Absorption

Figure 1

GP ENVIRONMENTAL SERVICES ***** METALS WORKING STANDARDS LOGBOOK

Document Control No.: GP163 Page No.: 315

Type : _____ Date Prepared: _____ Initials: _____

Matrix: _____ Date of Expiration: _____ Supervisor: _____

Element	A Starting Conc(ppm)	B Volume Added(ml)	C Final Volume(ml)	AxB/C Final Conc(ppm)	Std Source page # or (GP ID no)	Date of Expire
Zinc					Zn	
Beryllium					Be	
Cadmium					Cd	
Manganese					Mn	
Barium					Ba	
Cobalt					Co	
Copper					Cu	
Vanadium					V	
Chromium					Cr	
Nickel					Ni	
Iron					Fe	
Aluminum					Al	
Magnesium					Mg	
Calcium					Ca	
Arsenic					As	
Selenium					Se	
Silver					Ag	
Lead					Pb	
Thallium						

Comments: _____

Figure 2

GP ENVIRONMENTAL SERVICES
ICP ANALYSIS RUN LOG

DOCUMENT NO.: GP162

INSTRUMENT ID NO.: 6000 DATE: _____

VIEWING HEIGHT: _____ mm PLASMA FLOW: _____ L/min

NEB. PRESSURE: _____ psi NEB. FLOW: _____ L/min

R.F. POWER_(1.25): _____ Kilowatts AUXILLIARY FLOW: _____ L/min

ENERGY: _____ B.E.C. (< 0.05): _____

WORKORDER NUMBER	FRACTIONS	DATAFILE	TIME	ELEMENTS COMPLETED	ANALYST

COMMENTS:

Figure 3

GP ENVIRONMENTAL SERVICES

INSTRUMENT ID_____ BENCH SHEET FOR ICP

DATE OF ANALYSIS_____ DATE OF REVIEW_____

ANALYST NAME_____ REVIEWER'S NAME_____

ANALYST SIGNATURE_____ REVIEWER'S SIGNATURE_____

TIME ANALYSIS INITIATED_____ WORK ORDER NUMBER_____

CASE_____ SDG_____

INDUCTIVELY COUPLED PLASMA

ID	D.F.	COMMENTS	ID	D.F.	COMMENTS	ID	D.F.	COMMENTS
1. ICV			25.CCV			49.CCV		
2. ICB			26.CCB			50.CCB		
3.			27.			51.		
4.			28.			52.		
5.			29.			53.		
6.			30.			54.		
7.			31.			55.		
8.			32.			56.		
9.			33.			57.		
10.			34.			58.		
11.			35.			59.		
12.			36.			60.		
13.CCV			37.CCV			61.CCV		
14.CCB			38.CCB			62.CCB		
15.	--		39.			63.		
16.			40.			64.		
17.			41.			65.		
18.			42.			66.		
19.			43.			67.		
20.			44.			68.		
21.			45.			69.		
22.			46.			70.		
23.			47.			71.		
24.			48.			72.		

COMMENTS:

Figure 4

GP Environmental Services
Perkin Elmer _____ Maintenance Log

Date Problem Occured : _____ Date Service Technician Contacted : _____

Date Service Technician Came : _____ Service Performed By : _____

Description of Problem : _____

Initiated By : _____

Figure 5

ICP OPERATION, CALIBRATION AND QUANTITATION OF HSL METALS

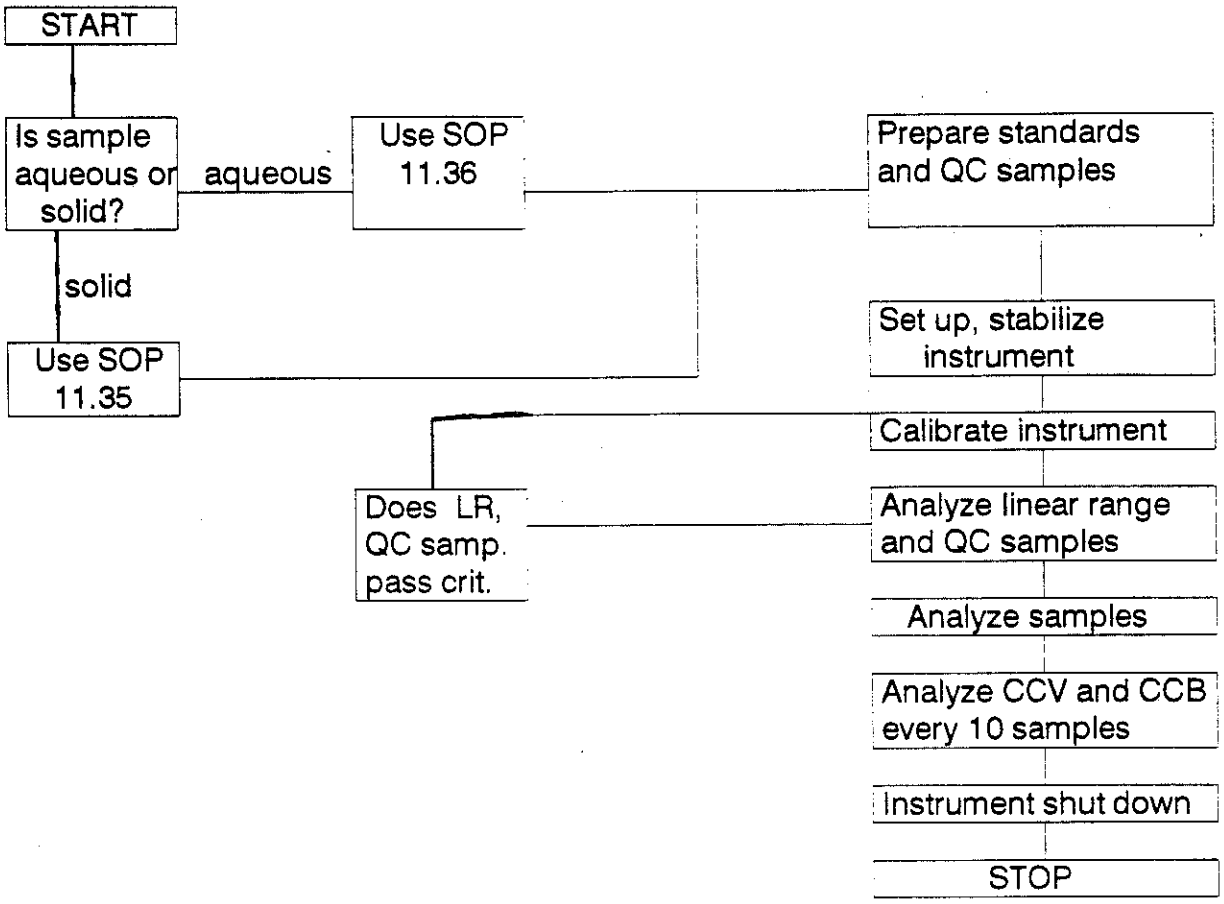

Effective Date: July 1995
Version Number: 1
Initiated By :
Approved By :

SOP No.: 11.41

Title : Graphite Furnace Analysis for Arsenic

Scope : The method detailed in this procedure is for the analysis of water, soil, sediment, sludge and other solid waste digestates for arsenic by graphite furnace atomic absorption spectroscopy in accordance with SW 846 method 7060.

I. PURPOSE

The quantification of Arsenic by graphite furnace. All samples are digested in accordance with SOP 11.35 or SOP 11.37 prior to analysis. The digestate holding time is 180 days.

II. REFERENCES

SW 846 method 7060A

III. Equipment and Supplies

- Eppendorf pipetters and pipette tips
  - 1000 μl
  - 100 μl
  - 20 μl
  - 10 μl
- 5 or 10 ml disposable polystyrene beakers
- 2 ml autoanalysis disposable sample cups
- Perkin Elmer Graphite Furnace (Zeeman 3030)
- Autosampler (AS 60/70)
- Perkin Elmer or Buck Scientific pyrocoated graphite tubes and platforms
- Light Source (Electrodeless Discharge Lamp (EDL) or Hollow Cathode Lamp (HCL))

- Argon gas (cryogenic liquid source)
- EDL Power supply (for an EDL lamp)

IV. REAGENTS

- 5% Nickel Nitrate solution:

  Dissolve 24.78 grams if ACS reagent grade $Ni(NO_3)2 \times 6 H_2O$ in deionized water and bring to 100 ml in volumetric flask.

- 1000 ppm certified As standard.
- Furnace Water - Deionized water with 1.25% Nitric acid and 0.18% Hydrogen Peroxide

  Add 125 mls of concentrated Nitric acid and 60 mls H_2O_2 (30%) to 10 liters of deionized H_2O.

- Deionized H_2O ASTM Type II or equivalent.
- ICV, CCV and LCS Standards currently supplied by HIGH PURITY STANDARDS.

  LCSS Standards currently supplied by ENVIROMENTAL RESOURCE ASSOCIATES (ERA).

V. PROCEDURE (See Figure 7 for flow chart)

A. Standard Preparation

1. Prepare a blank with Furnace H_2O

2. Prepare Stock Solution 1 (10 ppm) from the 1000 ppm standard solution. Prepare Stock Solution 2 (1000 ppb) from the 10 ppm Stock Solution 1. Prepare the Stock Solution 3 (500 ppb) from the 1000 ppb Stock Solution 2. Preparation parameters are given below. Prepare in disposable beakers Standards 1 (100 ppb), 2 (50 ppb), and 3 (10 ppb) from Stock Solutions 1, 2, and 3, respectively as described below.

$$\text{Stock 1} = \frac{(0.02\ \text{ml})(1000\ \text{ppm})}{2\ \text{ml Furnace } H_2O} = 10\ \text{ppm or } 10000\ \text{ppb}$$

$$\text{Stock 2} = \frac{(0.20\ \text{ml})(10\ \text{ppm})}{2\ \text{ml Furnace } H_2O} = 1000\ \text{ppb}$$

$$\text{Stock 3} = \frac{(1.0\ \text{ml})(1000\ \text{ppb})}{} = 500\ \text{ppb}$$

$$\text{Std. 1} = \frac{(0.20\ \text{ml})(1000\ \text{ppb})}{2\ \text{ml Furnace } H_2O} = 100\ \text{ppb}$$

$$\text{Std. 2} = \frac{(0.20\ \text{ml})(500\ \text{ppb})}{2\ \text{ml Furnace } H_2O} = 50\ \text{ppb}$$

$$\text{Std. 3} = \frac{(0.20\ \text{ml})(100\ \text{ppb})}{2\ \text{ml Furnace } H_2O} = 10\ \text{ppb}$$

3. 1000 ppb will be used as the analytical spiking solution.

4. Label four sample cups: 10 ppb, 50 ppb, 100 ppb, and blank. Add 20 μl of the 5% Nickel Nitrate solution to four sample cups and add 1 ml of each concentration of standard to its respective cup and 1 ml of furnace water to the fourth for the blank.

5. Prepare standards daily.

B. QC Preparation

1. Using ICVC, prepare the ICV and CCV's in a sample cup with 20 μl of the 5% Nickel Nitrate solution as follows:

$$\frac{(10\ \mu\text{l of ICVC})}{1\ \text{ml}} = \text{a final concentration of } 50.0\ \text{ppb}$$

True Value of ICVC = 5000 μg/L

2. ICB and CCB preparation is the same as the preparation for the blank standard.

3. A CCV (ICV) and a CCB (ICB) must be run for every ten samples analyzed, at the beginning of the run and at the end of a run.

C. Sample Preparation

1. Treat preparation blanks (PB), laboratory control samples (LCS), digested spikes, and duplicates as samples.

2. The LCS soil needs a dilution before analyzing. Check the certificate of analysis to determine what dilution will be needed.

3. The LCS water (LCSW = IVC) does not need dilution. The true value is 50.0.

4. Add 20 μl of the 5% Nickel Nitrate solution to all sample cups to be used for the analysis.

5. To these sample cups add one ml of sample.

6. Analytical Spike Preparation

A 20 ppb analytical spike is required of all samples, prep. blanks, LCS's, and duplicates. It is not required on a digested spike.

Prepare an analytical spike (using 1000 ppb spiking solution prepared with the standards) in a sample cup with 20 μl of the 5% Nickel Nitrate solution as follows:

$$\frac{(20\ \mu l \text{ of } 1000 \text{ ppb})}{1 \text{ ml}} = 20 \text{ ppb} + \text{the sample concentration}$$

7. Prepare an Arsenic bench sheet (Figure 4) in the following sequence:

a) ICV
b) ICB
c) CRA (the lowest standard in the calibration line)
d) PB (either water, soil or both; see QC rules)
e) PBA
f) LCS (either water, soil or both)
g) LCSA
h) Sample
i) SampleA
j) SampleD (duplicate)
k) SampleDA
l) SampleS (digested spike)
m) CCV1
n) CCB1

The "A" following the sample indicates the analytical spike. It may be necessary to run a CCV and CCB before 10 samples have been run to avoid splitting up an analytical spike and its sample.

The Benchsheet is created directly in the computer which utilizes the Multipro software program.
This program is able to acquire data directly from the instrument.
To use this program, turn the computer on.
MENU will appear on the screen with the following submenu:

1. ANALYST'S NOTEBOOK

2. NETWORK

3. EMERGENCY LOCAL ANALYST NOTEBOOK OPERATION

Type 1 and the password.
Select the printer to which you want your work directed to.

The Multipro screen will then appear with the menu:

"System, Analysis, Methods, Data Entry, Export Data, Reports".

Go to method and load. Press "Enter", and type AS.

Go to "Analysis" select "Add New Run".

Then name your runfile, your initial, date of the run and run number. Press "Enter."

Go to "Incomplete backlog". Here you are automatically loading workorder(s) that you want to run. You can load by department or by testcode.
To load by department, type "INGF", or type "206_2" or "7060" whichever is applicable if you are loading by test code.
The list of workorders will then appear, Press "Enter" on any workorder you choose. Press "F10" when you finish your selection to load the selected workorder(s). Enter "Y" for default of analytical spike "AS."

Go to "Data Entry" and hit "Enter".

Select "Modify data".
Go to Edit Sequence. All the loaded workorder should be here. Modify your benchsheet to reflect what it should look like. Insert the approriate quality controls where they should be by using the insert key.
The quality control requirements must be met.
Please refer to the quality control section of this procedure.
When this is completed then go to "Acquire Data."
Press "Enter" and again press "F10" to commit.
In the default mode type "LR" (Linear Regression).
Enter the number of replicates.
Enter "Y" to to record time of runs.
Then press "F10" one more time to start acquiring your data.

Note: The "PRINT" key on the instrument must be on for the multipro to acquire data.

D. Tuning and Calibration of Instrument

1. Turn on the furnace in the following sequence:

   a. cooling water on

   b. furnace power on

c. computer screen on

d. printer on

2. Make sure there is enough deionized water in the white plastic water bottle located under the autosampler.

3. Check the graphite tube to see if it is still usable. (Press the "furnace" button to open the furnace where the tube is.) If it is overly charred or bent, replace the tube and platform. Make sure the injection hole is lined up correctly.

4. Attach the light source (EDL or HCL).

   a. For EDL:

      1) Attach to cable running to EDL power supply.
      2) Turn on power supply.
      3) Start the UV light with the "UV starter".
      4) Turn the power supply to 250.

   b. For HCL:
      1) Plug into GFA
      2) Set to 10 amps on program page. (later)

5. Press "user index" control key to find user index page.

6. Select the method # that corresponds to Arsenic by entering in the number and pressing "recall" control key. A method that has already been set up will appear (Figure 1).

7. Set the wavelength at 193.7. Set the slit width at 0.7 nm.

8. Press the "set up" control key for the "SET UP MODE INSTRUMENT" page. Adjust the lamp by turning the metal knobs by the lamp to gain the maximum energy. Press the "gain" key to rescale and increase energy. The energy should be approximately 50. The lamp will need some time to warm up (15-30 min.).

9. Go to the "PROGRAM INSTRUMENT MODE" page by pressing the "prog" key. Advance or backup through this page by using the keys at the bottom. This page should appear as shown in Figure 1. If using a hollow cathode lamp, set the amps at 10 or whatever is required by the lamp manufacturer.

10. Press the "prog" button again for the "PROGRAM MODE HGA 600" page. Use the keys on the bottom to move around the screen. The first two steps are the drying temperatures; the second two are the pretreat temps.; the third is the atomization temp.; and the last is the burn off temperature. The ramp time

is the time the furnace takes to reach the corresponding temperature and the hold time is how long that temperature is held before the next step. The set up on this page should be as described in Figure 2.

11. Press the "prog" button again to go to the "PROGRAMMING MODE AUTOSAMPLER" page. Use the keys at the bottom to move around the screen. Enter the location of which your standards (1-4) and samples (starting at location 5) are in the autosampler. Enter in the injection volume specified for the standards and samples (See Figure 3). Now you are ready to begin the analysis.

E. Sample Analysis

1. Press the "run" button and a screen with a blank graph will appear.

2. If a "check" key at the bottom of the page appears, press this first. This will tell you if there is anything wrong with the program set up.

3. Now press the "sampler reset" key at the bottom of the screen. This resets the autosampler.

4. Now press the "sampler on/off" key at the bottom of the screen. This starts and stops the autosampler.

5. Make sure the printer is on line and press the print key to print out the results.

6. When the last standard is running, press the "autosampler on/off" key again to stop after the last standard. Check the calibration. The correlation must be at least .995 or better.

7. Record the absorbance of the highest standard in the Graphite Furnace Run Log, located at each furnace instrument.

8. Enter in the number of the first sample in the autosampler, a period and then the number of the last sample (ex. 1.32). This will tell the autosampler where to stop. Now press the "autosampler on/off" key again to start the analysis of the samples.

9. A "run finished" will appear on the screen when the run is completed.

10. Fill out the Graphite Furnace Run Log (Figure 5) for samples or cases run that day.

Other key functions:

11. "Cont" enables you to see a bar graph of the relative signal. Also, by using the keys at the bottom of the screen, the instrument can be autozeroed, the injector can be flushed with DI water, and the injector can be moved into and out of the DI water.

12. "Display Graph" displays the graph of the sample that was run last.

13. "Display Calib." displays the calibration curve.

14. "Display Suppl" displays the absorbances and the results.

15. "New keys" allows you to start the calibration from the middle if one of the calibration points was off.

16. "Store" stores the method in the user index.

17. "Print Screen" prints the screen displayed.

18. "Print" prints the results.

The keys at the bottom of the display screens:

19. "HGA on/off" turns the furnace on or off.

20. "Manual temp." turns the furnace temp. on until you press it again.

21. "Skip Step" skips the current step and progresses to the next one.

22. "Manual Position" tell the autosampler to run the specific sample entered.

F. Trouble Shooting and Corrective Action

1. The calibration curve is below .995.

   a. The standards may need to be remade.

   b. The temperatures or times may need to be adjusted.

2. The values are all coming out very low or zero.

   a. Make sure the autosampler is injecting into the graphite tube.

3. The values are low.

   a. The tube may need changing.

4. "High tube impedence" error message appears.
   a. The tube needs changing.

5. "The instrument cannot set gain (no energy)" error message appears.

   a. Check the wavelength

   b. Check to see if the power supply is on.

   c. Make sure nothing is blocking the light source.

   d. Check to see if the correct lamp is connected.

6. ICV fails

   a. Check absorbances of standards for possibility of incorrect dilution.

   b. Remake ICV and if it still fails, recalibrate and try again.

7. High negative values.

   a. There is a high matrix interference and the sample needs to be diluted.

G. Calculations

1. % Recovery for ICV, CCV's, LCS

$$\frac{\text{Obtained value}}{\text{True Value}} \times 100$$

2. % Recovery for spikes and analytical spikes.

$$\frac{\text{Spike value} - \text{Sample value}}{\text{Spiked conc.}} \times 100$$

3. If the value is below the IDL, a zero is used for calculations.

VI. QUALITY CONTROL

A. The instrument must be calibrated every time a new run is started or every 24 hours.

B. After a new calibration, the run must begin with an ICV followed by an ICB and a CRA.

C. QC's and blanks must be run every ten samples or every two hours (whichever is more frequent).

D. A Prep blank, LCS, Duplicate, and Digested Spike must be run for every SDG or every 20 samples within an SDG (soil for soil samples, water for water samples, or both for both matrices).

E. The coefficient variation must be < 20%

F. % Recoveries or limits:

ICV	± 10%
CCV	± 10%
ICB	Less than the lowest standard
CCB	Less than the lowest standard
PB	Less than the lowest standard
PBA	± 15%
LCSW	± 20%
LCSWA	>40%
LCSS	between 273.5 ppb and 830 ppb (ERA 220 7/94)
LCSSA	>40%
SAMPLE-A	± 15%

1. If the ICV fails, the adjustments must be made and the instrument recalibrated.

2. If a CCV fails, the run must be stopped, the instrument recalibrated and the preceding 10 samples must be rerun.

3. If the ICB fails, autozero the instrument, recalibrate and run again. If it still fails, check for contaminants in the furnace water or the matrix modifier.

4. If a CCB fails, stop the run, autozero and recalibrate. The preceding 10 samples must be rerun.

5. If a prep blank fails, rerun once. If it still fails, the samples are contaminated and must be redigested.

6. If PBA fails, the spiking solution must be remade and the PB and PBA must be rerun. If it still fails, there are interferences and the samples must be redigested.

7. If an LCS fails, rerun once. If it still fails, the samples must be redigested.

8. If an LCSA fails, rerun the LCS and LCSA once. If it still fails, there are interferences and the samples must be redigested.

9. If an analytical spike of a sample is between 40% and 85%, an MSA is required. Exception: if the spiked result is > 3 X the value of the sample.

   MSA Preparation: Using the sample result, spike the sample at 50%, 100%, and 150% of that value using standard solution 1000 ppb. Only a single injection is required. If the correlation is below 0.995, rerun once.

10. If the analytical spike of a sample is < 40%, dilute and rerun.

VII. SAFETY

A. Equipment

1. Lab coat

2. Safety glasses

3. Plastic gloves

B. Potential hazards

1. UV light source is hazardous to the eyes if looked at directly.

2. The furnace temperature is very high. Wait a minute before checking tube in furnace after operating.

3. Fumes emitted from the furnace are potentially hazardous. A ventilation system provided over each furnace to remove these fumes.

VIII. DISPOSAL REQUIREMENTS

A. The samples are held for three months in a storage room.

B. The samples are neutralized and washed down the drain according to SOP 9.1, Hazardous Waste Disposal.

IX. REPORTING REQUIREMENTS

A. 1. The raw data must be recorded in ink and must contain on the first page:

a. Analyst's initials

b. Date

c. Element analyzed

d. Standard source and lot #

e. ICV source

f. Work order

2. Each sample must be identified in the raw data by the appropriate name designated by the client.

3. Each sample must have an analysis time associated with it in the raw data.

4. MSA analysis must be accompanied by the correlation, calculated value, slope, and intercept in the raw data.

5. The following information must be recorded in the Graphite Furnace Run Log (Figure 5): date, element, highest standard, units of highest standard, lamp energy, time, absorbance, analyst's name, work order #, and fractions run.

6. The following information must be recorded on the Arsenic Bench Sheet (Figure 4): instrument ID, date of analysis, analyst's name and signature, review date, reviewer's signature, work order number, time analysis initiated.

7. All maintenance, both routine and unexpected, shall be recorded on a Maintenance Log sheet (Figure 6) which is kept in the "Maintenance Log" Book for each instrument.

Figure 1

Furnace Program - main page

PROGRAMMING MODE INSTRUMENT USER METHOD # 01 - AS DATE: _____

ELEMENT: AS WAVELENGTH (NM): 196.7 SLIT (NM): 0.7
PYRO COATED TUBE WITH PLATFORM - MAX POWER HEATING - GAS STOP - MATRIX MOD.
PRETREAT TEMP: 1300 ATOMIZE TEMP: 2300 CHARACT.MASS (PG) 17.0

1.	TECHNIQUE: ZEEMAN	2.	LAMP CURRENT (MA): 0	<< USE EDL
2.	SIGNAL PROCESSING: PEAK AREA	3.	CALIBRATION: LINEAR	
4.	TIME (SECONDS): 5.0	5.	READ DELAY (SECONDS): 0.0	
7.	SCREEN FORMAT: 0.2 GRAPHICS	8.	PRINTER: OFF	<< MUST BE OFF
9.	RECORDER SIGNAL: 0.2 CONT ABS	10.	RECORDER EXP: 1000	
11.	STATISTICS: 2 AVG. & SD & CV	12.	NOMINAL WEIGHT 1.0	
13.	ROLLOVER(ABS): 1.5	14.	BG SCALE: 0.2	

15. S1: <<LEAVE ALL ENTRIES FOR STANDARD EMPTY

Figure 2

Furnace Program - heating times and temperatures

PROGRAMMING MODE INSTRUMENT USER METHOD # 01 - AS DATE: _____

ELEMENT: AS WAVELENGTH (NM): 196.7 SLIT (NM): 0.7
PYRO COATED TUBE WITH PLATFORM - MAX POWER HEATING - GAS STOP - MATRIX MOD.
PRETREAT TEMP: 1300 ATOMIZE TEMP: 2300 CHARACT.MASS (PG) 17.0

STEP NUMBER	FURNACE TEMPERATURE	TIME RAMP	TIME HOLD	INTERNAL GASFLOW	READ	RECORDER
1	120	1	15	300	-	-
2	220	5	5	300	-	-
3	1100	5	5	300	-	-
4	20	1	5	0	-	-
5	2300	0	5	0	*	-
6	2700	1	3	300	-	-

Figure 3

Furnace Program - Autosampler controls

PROGRAMMING MODE AUTOSAMPLER USER METHOD # 01 - AS DATE: _____

SOLUTIONS	LOCATION	VOLUME	BLANK VOLUME
BLANK	--	--	20
STANDARD 1	--	--	__
STANDARD 2	--	--	__
STANDARD 3	--	--	__
STANDARD 4	--	--	__
STANDARD 5	--	--	__
STANDARD 6	--	--	__
STANDARD 7	--	--	__
STANDARD 8	--	--	__
RESLOPE	--	--	__
MATRIX MODIFER 1	--	--	__
MATRIX MODIFER 2	--	--	__
SAMPLE 01 TO 40 WITH MODIFER - - -		20	__
SAMPLE -- TO -- WITH MODIFER - - -		--	__

RECAL LOCATIONS: -- : -- : -- : -- NUMBER OF INJECTIONS: 01

NOTE: Add 20 uL 5% nickel nitrate modifer to 1.0 ml of standards and samples prior to loading onto autosampler.

Figure 4

95-06-133
95-06-148
95-06-149
95-06-179
95-06-220
EU 7.10

BENCH SHEET
ARSENIC

Page 1

DATA FILE: AS71095A
INSTRUMENT FILE: AS71095A

CASE:
INSTRUMENT: 3209

SDG:
ANALYZED: 07/10/95

SEQ	LAB ID	CLIENT ID	MATRIX	DILUTION	SIZE	VOLUME	%SOLIDS	ANALYZED	
1	0.00 ug/L	S0	WATER	1.00	100.000	100.000	100.00	07/10/95	06:21
2	10.0 ug/L	S10	WATER	1.00	100.000	100.000	100.00	07/10/95	06:24
3	30.0 ug/L	S30	WATER	1.00	100.000	100.000	100.00	07/10/95	06:27
4	100 ug/L	S100	WATER	1.00	100.000	100.000	100.00	07/10/95	06:30
5	ICV	ICV	WATER	1.00	100.000	100.000	100.00	07/10/95	06:33
6	ICB	ICB	WATER	1.00	100.000	100.000	100.00	07/10/95	06:36
7	CRA	CRA	WATER	1.00	100.000	100.000	100.00	07/10/95	06:39
8	PBW 07-07-95	PBW 07-07-95	WATER	1.00	100.000	100.000	100.00	07/10/95	06:42
9	PBW 07-07-95A	PBW 07-07-95A	WATER	1.00	100.000	100.000	100.00	07/10/95	06:45
10	PBS 07-07-95	PBS 07-07-95	SOIL	1.00	1.000	100.000	100.00	07/10/95	06:48
11	PBS 07-07-95A	PBS 07-07-95A	SOIL	1.00	1.000	100.000	100.00	07/10/95	06:51
12	LCSW	LCSW	WATER	1.00	100.000	100.000	100.00	07/10/95	06:54
13	LCSWA	LCSWA	WATER	1.00	100.000	100.000	100.00	07/10/95	06:57
14	LCSS	LCSS	SOIL	50.00	1.000	100.000	100.00	07/10/95	07:00
15	LCSSA	LCSSA	SOIL	50.00	1.000	100.000	100.00	07/10/95	07:03
16	CCV1	CCV1	WATER	1.00	100.000	100.000	100.00	07/10/95	07:06
17	CCB1	CCB1	WATER	1.00	100.000	100.000	100.00	07/10/95	07:09
18	9506132-02E	E36-SW24-00-126	WATER	1.00	100.000	100.000	100.00	07/10/95	07:12
19	9506132-02EA	E36-SW24-00-126A	WATER	1.00	100.000	100.000	100.00	07/10/95	07:15
20	9506132-02ED	E36-SW24-00-1260	WATER	1.00	100.000	100.000	100.00	07/10/95	07:18
21	9506132-02EDA	E36-SW24-00-1260A	WATER	1.00	100.000	100.000	100.00	07/10/95	07:21
22	9506132-02ES	E36-SW24-00-126S	WATER	1.00	100.000	100.000	100.00	07/10/95	07:24
23	9506132-04E	E36-SW24-00-129	WATER	1.00	100.000	100.000	100.00	07/10/95	07:27
24	9506132-04EA	E36-SW24-00-129A	WATER	1.00	100.000	100.000	100.00	07/10/95	07:30
25	9506132-06E	E36-SW26A-00-133	WATER	1.00	100.000	100.000	100.00	07/10/95	07:33
26	9506132-06EA	E36-SW26A-00-133A	WATER	1.00	100.000	100.000	100.00	07/10/95	07:36
27	CCV2	CCV2	WATER	1.00	100.000	100.000	100.00	07/10/95	07:39
28	CCB2	CCB2	WATER	1.00	100.000	100.000	100.00	07/10/95	07:42
29	9506133-01E	E36-SD24-01-128	SOIL	1.00	1.000	100.000	51.20	07/10/95	07:45
30	9506133-01EA	E36-SD24-01-128A	SOIL	1.00	1.000	100.000	51.20	07/10/95	07:48
31	9506133-02E	E36-SS24-01-131	SOIL	1.00	1.000	100.000	70.10	07/10/95	07:51
32	9506133-02EA	E36-SS24-01-131A	SOIL	1.00	1.000	100.000	70.10	07/10/95	07:54
33	9506133-03E	E36-SS19-01-139	SOIL	1.00	1.000	100.000	82.30	07/10/95	07:57
34	9506133-03EA	E36-SS19-01-139A	SOIL	1.00	1.000	100.000	82.30	07/10/95	08:04
35	9506133-04E	E36-SD24-01-132	SOIL	1.00	1.000	100.000	33.50	07/10/95	08:07
36	9506133-04EA	E36-SD24-01-132A	SOIL	1.00	1.000	100.000	33.50	07/10/95	08:10
37	9506133-05E	E36-SD26A-01-135	SOIL	1.00	1.000	100.000	80.70	07/10/95	08:13
38	9506133-05EA	E36-SD26A-01-135A	SOIL	1.00	1.000	100.000	80.70	07/10/95	08:16
39	CCV3	CCV3	WATER	1.00	100.000	100.000	100.00	07/10/95	08:19
40	CCB3	CCB3	WATER	1.00	100.000	100.000	100.00	07/10/95	08:22

F. Welch FU 7-10-95
Analyst / Date

Lab Supervisor / Date

Figure 5

GP ENVIRONMENTAL SERVICES FURNACE RUN LOG

INSTRUMENT ID: 3050 DOCUMENT CONTROL NUMBER:_____ PAGE NO._____

DATE_____ TIME_____ ELEMENT_____ WORK ORDER # / FRACTIONS

HIGHEST STD_____UG/L ABS_____ _____/_____

STD SOURCE_____ ICV SOURCE_____ _____/_____

DATAFILE NAME_____ LAMP ENERGY_____ _____/_____

METHOD FILE_____ FURNACE PROG ____ _____/_____

COMMENTS_____ _____/_____

_____ _____/_____

_____ _____/_____

ANALYST'S NAME_____ _____/_____

DATE_____ TIME_____ ELEMENT_____ WORK ORDER # / FRACTIONS

HIGHEST STD_____UG/L ABS_____ _____/_____

STD SOURCE_____ ICV SOURCE_____ _____/_____

DATAFILE NAME_____ LAMP ENERGY_____ _____/_____

METHOD FILE_____ FURNACE PROG ____ _____/_____

COMMENTS_____ _____/_____

_____ _____/_____

_____ _____/_____

ANALYST'S NAME_____ _____/_____

DATE_____ TIME_____ ELEMENT_____ WORK ORDER # / FRACTIONS

HIGHEST STD_____UG/L ABS_____ _____/_____

STD SOURCE_____ ICV SOURCE_____ _____/_____

DATAFILE NAME_____ LAMP ENERGY_____ _____/_____

METHOD FILE_____ FURNACE PROG ____ _____/_____

COMMENTS_____ _____/_____

_____ _____/_____

_____ _____/_____

ANALYST'S NAME_____ _____/_____

Figure 6

3-27-95	New Graphite tube installed FH.
4-3-95	New Graphite tube installed FH.
4-6-95	Computer screen shaking when instrument is not operational. Turned instrument off. Appears to arise from power source.
4-11-95	Graphite tube changed FH
4-19-95	New graphite tube installed FH
4-27-95	New Graphite tube installed FH
5-3-95	New Graphite tube installed FH
5-11-95	New Graphite tube installed FH windows cleaned FH.
5-18-95	New Graphite tube installed FH
6-1-95	New Graphite tube installed FH
6-13-95	New graphite tube installed FH
6-27-95	New graphite tube installed FH
7-3-95	New graphite tube installed FH

Figure 7

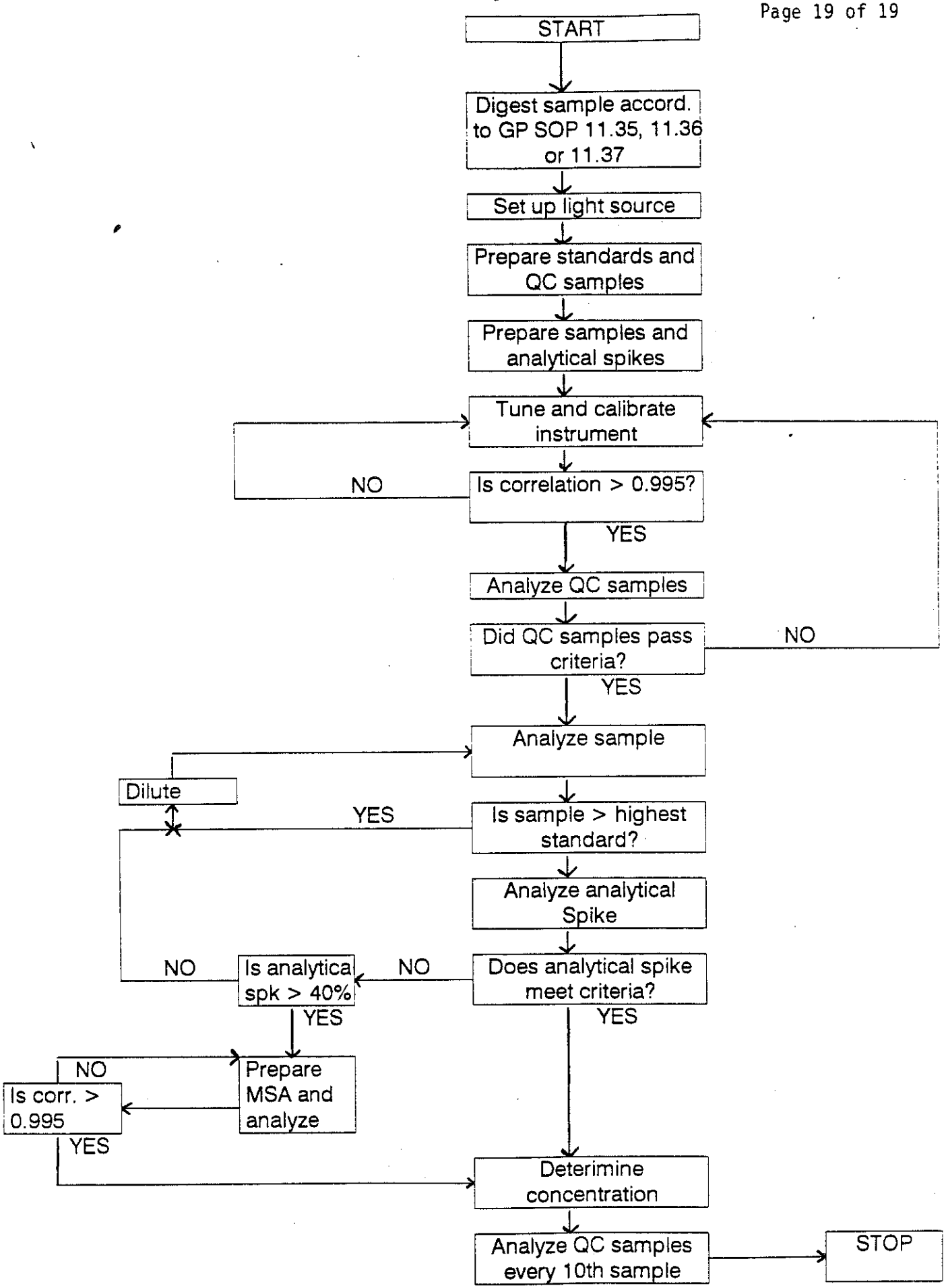
START
Digest sample accord. to GP SOP 11.35, 11.36 or 11.37
Set up light source
Prepare standards and QC samples
Prepare samples and analytical spikes
Tune and calibrate instrument
Is correlation > 0.995?
NO
YES
Analyze QC samples
Did QC samples pass criteria?
NO
YES
Analyze sample
Dilute
Is sample > highest standard?
YES
Analyze analytical Spike
Does analytical spike meet criteria?
NO
YES
Is analytical spk > 40%
NO
YES
Prepare MSA and analyze
Is corr. > 0.995
NO
YES
Deterimine concentration
Analyze QC samples every 10th sample
STOP

Effective Date: July 1995
Version Number: 1
Initiated By :
Approved By :

SOP No.: 11.40

Title : Graphite Furnace Analysis for Antimony

Scope : The method detailed in this procedure is for the analysis of water, soil, sediment, sludge and other solid waste digestates for antimony by graphite furnace atomic absorption spectroscopy in accordance with SW 846 method 7041.

I. PURPOSE

The quantification of Antimony by graphite furnace. All samples are digested in accordance with SOP 11.35 or SOP 11.36 prior to analysis. All samples will be digested in hydrochloric acid as Antimony is unstable in nitric acid prior to analysis. The digestate holding time is 180 days.

II. REFERENCES

SW 846 method 7041

III. EQUIPMENT AND SUPPLIES

- Eppendorf pipetters and pipette tips
  - 1000 μl
  - 100 μl
  - 20 μl
  - 10 μl
- 5 or 10 ml disposable polystyrene beakers
- 2 ml autoanalysis disposable sample cups
- Perkin Elmer Graphite Furnace (Zeeman 3030)
- Autosampler (AS 60/70)
- Perkin Elmer or Buck Scientific pyrocoated graphite tubes and platforms
- Light Source (Electrodeless Discharge Lamp (EDL) or Hollow Cathode Lamp

- Argon gas (cryogenic liquid source)
- EDL power supply (for EDL lamp)

IV. REAGENTS

- 5% Nickel Nitrate solution:

  Dissolve 24.78 grams of ACS reagent grade $Ni(NO_3)_2$ 6 H_2O in deionized water and bring to 100 ml in volumetric flask.

- 1000 ppm certified Sb standard
- Flame Water - Deionized water with 1.00% Nitric acid and 5.00% Hydrochloric acid

  Add 100 mls of concentrated HNO_3 and 500 mls HCl to 10 liters of deionized H_2O.

- Deionized H_2O ASTM Type II or equivalent.
- ICV, CCV, and LCS Standards currently supplied by HIGH PURITY STANDARDS or ENVIRONMENTAL RESOURCES ASSOCIATES.

V. PROCEDURE (See Figure 7 for flow chart)

A. Standards Preparation

1. Prepare a blank with Flame H_2O

2. Prepare Stock Solution 1 (10 ppm) from the 1000 ppm standard solution. Next, prepare Stock Solution 2 (1000 ppb) from the 10 ppm Standard Solution 1. Prepare in disposable beakers Standards 1 (150 ppb), 2 (30 ppb), and 3 (6 ppb) from Stock Solution 2 as follows:

$$\text{Stock soln. 1} = \frac{(0.02\ \text{ml})(1000\ \text{ppm})}{2\ \text{ml Flame } H_2O} = 10\ \text{ppm or } 10000\ \text{ppb}$$

$$\text{Stock soln. 2} = \frac{(0.20\ \text{ml})(10\ \text{ppm})}{2\ \text{ml Flame } H_2O} = 1000\ \text{ppb}$$

$$\text{Std. 1} = \frac{(0.15\ \text{ml})(10000\ \text{ppb})}{1\ \text{ml Flame } H_2O} = 150\ \text{ppb}$$

$$\text{Std. 2} = \frac{(0.30\ \text{ml})(1000\ \text{ppb})}{1\ \text{ml Flame } H_2O} = 30\ \text{ppb}$$

$$\text{Std. 3} = \frac{(0.60\ \text{ml})(100\ \text{ppb})}{1\ \text{ml Flame } H_2O} = 6\ \text{ppb}$$

Prepare the MSA Spike Solution (100 ppb) from the 1000 ppm antimony standard as follows:

$$\frac{(.10)(1000\ \text{ppm})}{1\ \text{ml Flame } H_2O} = 100\ \text{ppb}$$

The 1000 ppb will be used as the analytical spiking solution

3. Label four cups, 150 ppb, 30 ppb, 6 ppb, and Blank.

4. Add 20 μl of 5% Nickel Nitrate solution to each of four sample cups, add 1 ml of each concentration of standard to its respective cup, and add 1 ml of flame water to the fourth cup for the blank.

5. Prepare standards daily.

B. QC Preparation

1. Using ICVB, prepare the ICV and CCV's in a sample cup with 20 μl of 5% Nickel Nitrate solution as follows:

$$\frac{(10\ \mu\text{l of ICVB})}{1\ \text{ml}} = \text{a final concentration of 1000 ppb}$$

$$\frac{(100\ \text{ul of 1000 ppb})}{1\ \text{ml}} = 100\ \text{ppb}$$

*True Value of ICVB = 100000 μg/L

2. ICB and CCB preparation is the same as the preparation for the blank standard.

3. A CCV (ICV) and a CCB (ICB) must be run for every ten samples analyzed, at the beginning of a run and at the end of a run.

C. Sample Preparation

1. Treat preparation blanks (PB), laboratory control samples (LCS), digested spikes, and duplicates as samples.

2. The LCS soil needs a dilution before analyzing.
The LCS soil is made from Enviromental Resource Associates (ERA) quality control standards. Check the certificate of analysis for the true value to determine the dilution required.

3. ICVA is used to make the LCSW

   The true value for the LCS water is 100 ppb

4. Add 20 μl of 5% Nickel Nitrate solution to all sample cups to be used for the analysis.

5. To these sample cups add one ml of sample.

6. Analytical Spike Preparation

   A 50 ppb analytical spike is required for all samples, prep. blanks, LCS's, and duplicates. It is not required on a digested spike.

   Prepare an analytical spike (using 1000 ppb spiking solution prepared with the standards) in a sample cup with 20 μl Nickel Nitrate solution as follows:

$$\frac{(50\ \mu l \text{ of } 1000 \text{ ppb})}{1 \text{ ml}} = 50 \text{ ppb} + \text{the sample concentration}$$

7. Prepare an Antimony bench sheet (Figure 4) in the following sequence:

   a) ICV
   b) ICB
   c) CRA (the lowest standard in the calibration line)
   d) PB (either water, soil or both; see QC rules)
   e) PBA
   f) LCS (either water, soil or both)
   g) LCSA
   h) Sample
   i) SampleA
   j) SampleD (duplicate)
   k) SampleDA
   l) SampleS (digested spike)
   m) CCV1
   n) CCB1

   The "A" following the sample indicates the analytical spike. It may be necessary to run a CCV and CCB before 10 samples have been run to avoid splitting up an analytical spike and its sample.

   The Benchsheet is created directly in the computer which utilizes the Multipro software program.
   This program is able to acquire data directly from the instrument.

To use this program, turn the computer on.
MENU will appear on the screen with the following submenu:

1. ANALYST'S NOTEBOOK

2. NETWORK

3. EMERGENCY LOCAL ANALYST NOTEBOOK OPERATION

Type 1 and the password.
Select the printer to which you want your work directed to.

The Multipro screen will then appear with the menu:

"System, Analysis, Methods, Data Entry, Export Data, Reports".

Go to method and load. Press "Enter", and type SB.

Go to "Analysis" select "Add New Run".

Then name your runfile, your initial, date of the run and run number. Press "Enter."

Go to "Incomplete backlog". Here you are automatically loading workorder(s) that you want to run. You can load by department or by testcode.
To load by department, type "INGF", or type "204_2" or "7041" whichever is applicable if you are loading by test code.
The list of workorders will then appear, Press "Enter" on any workorder you choose. Press "F10" when you finish your selection to load the selected workorder(s). Enter "Y" for default of analytical spike "AS."

Go to "Data Entry" and hit "Enter".

Select "Modify data".
Go to Edit Sequence. All the loaded workorder should be here. Modify your benchsheet to reflect what it should look like. Insert the approriate quality controls where they should be by using the insert key.
The quality control requirements must be met.
Please refer to the quality control section of this procedure.
When this is completed then go to "Acquire Data."
Press "Enter" and again press "F10" to commit.
In the default mode type "LR" (Linear Regression).
Enter the number of replicates.
Enter "Y" to to record time of runs.
Then press "F10" one more time to start acquiring your data.

Note: The "PRINT" key on the instrument must be on for the multipro to acquire data.

D. Tuning and Calibration of Instrument

1. Turn on the furnace in the following sequence:

   a. cooling water on

   b. furnace power on

   c. computer screen on

   d. printer or attached PC computer with printer on

2. Make sure there is enough deionized water in the white plastic water bottle located under the autosampler.

3. Check the graphite tube to see if it is still usable. (Press the "furnace" button to open the furnace where the tube is.) If it is overly charred or bent, replace the tube and platform. Make sure the injection hole is lined up correctly.

4. Attach the light source (EDL or HCL).

   a. For EDL:

      1) Attach to cable running to EDL power supply.
      2) Turn on power supply.
      3) Start the UV light with the "UV starter".
      4) Turn the power supply to approximately 250.

   b. For HCL:

      1) Plug into GFA
      2) Set to 10 amps on program page. (later)

5. Press "user index" control key to find user index page.

6. Select the method # which corresponds to Antimony by entering in the number and pressing "recall" control key. A method that has already been set up will appear (Figure 1).

7. Set the wavelength at 217.6. Set the slit width at 0.7 nm.

8. Press the "set up" control key for the "SET UP MODE INSTRUMENT" page. Adjust the lamp by turning the metal knobs by the lamp to gain the maximum energy. Press the "gain" key to rescale and increase energy. The energy should be approximately 50. The lamp will need some time to warm up (15-30 min.).

9. Go to the "PROGRAM INSTRUMENT MODE" page by pressing the "prog" key. Advance or backup through this page by using the keys at the bottom. This page should appear as shown in (Figure 1). If using a hollow cathode lamp, set the amps at 10 or whatever is required by the lamp manufacturer.

10. Press the "prog" button again for the "PROGRAM MODE HGA 600" page. Use the keys on the bottom to move around the screen. The first two steps are the drying temperatures; the second two are the pretreat temps.; the third is the atomization temp.; and the last is the burn off temperature. The ramp time is the time the furnace takes to reach the corresponding temperature and the hold time is how long that temperature is held before the next step. The set up on this page should be as described in Figure 2.

11. Press the "prog" button again to go to the "PROGRAMMING MODE AUTOSAMPLER" page. Use the keys at the bottom to move around the screen. Enter the location of which your standards (1-4) and samples (starting at location 5) are in the autosampler. Enter in the injection volume specified for the standards and samples (See Figure 3). Now you are ready to begin the analysis.

E. Sample Analysis

1. Press the "run" button and a screen with a blank graph will appear.

2. If a "check" key at the bottom of the page appears, press this first. This will tell you if there is anything wrong with the program set up.

3. Now press the "sampler reset" key at the bottom of the screen. This resets the autosampler.

4. Now press the "sampler on/off" key at the bottom of the screen. This starts and stops the autosampler.

5. Make sure the printer is on line and press the print key to print out the results.

6. When the last standard is running, press the "autosampler on/off" key again to stop after the last standard. Check the calibration. The correlation must be at least .995 or better.

7. Record the absorbance of the highest standard in the Graphite Furnace Run Log (Figure 5), located at each furnace instrument.

8. Enter in the number of the first sample in the autosampler, a period and then the number of the last sample (ex. 1.32). This will tell the autosampler where to stop. Now press the "autosampler on/off" key again to start the analysis of the samples.

9. A "run finished" will appear on the screen when the run is completed.

10. Fill out the Graphite Furnace Run Log (Figure 5) for samples or cases run that day.

Other key functions:

11. "Cont" enables you to see a bar graph of the relative signal. Also, by using the keys at the bottom of the screen, the instrument can be autozeroed, the injector can be flushed with DI water, and the injector can be moved into and out of the DI water.

12. "Display Graph" displays the graph of the sample that was run last.

13. "Display Calib." displays the calibration curve.

14. "Display Suppl" displays the absorbances and the results.

15. "New keys" allows you to start the calibration from the middle if one of the calibration points was off.

16. "Store" stores the method in the user index.

17. "Print Screen" prints the screen displayed.

18. "Print" prints the results.

The keys at the bottom of the display screens:

19. "HGA on/off" turns the furnace on or off.

20. "Manual temp." turns the furnace temp. on until you press it again.

21. "Skip Step" skips the current step and progresses to the next one.

22. "Manual Position" tell the autosampler to run the specific sample entered.

F. Trouble Shooting and Corrective Action

1. The calibration curve is below .995.

   a. The standards may need to be remade.

   b. The temperatures or times may need to be adjusted.

2. The values are all coming out very low or zero.

   a. Make sure the autosampler is injecting into the graphite tube.

3. The values are low.

   a. The tube may need changing.

4. "High tube impedence" error message appears.

   a. The tube needs changing.

5. "The instrument cannot set gain (no energy)" error message appears.

   a. Check the wavelength

   b. Check to see if the power supply is on.

   c. Make sure nothing is blocking the light source.

   d. Check to see if the correct lamp is connected.

6. ICV fails

   a. Check absorbances of standards for possibility of incorrect dilution.

   b. Remake ICV and if it still fails, recalibrate and try again.

7. High negative values.

   a. There is a high matrix interference and the sample needs to be diluted.

G. Calculations

1. % Recovery for ICV, CCV's, LCS

$$\frac{\text{Obtained value}}{\text{True Value}} \times 100$$

2. % Recovery for spikes and analytical spikes.

$$\frac{\text{Spike value - Sample value}}{\text{Spiked conc.}} \times 100$$

3. If the value is below the IDL, a zero is used for calculations.

VI. QUALITY CONTROL

A. The instrument must be calibrated every time a new run is started or every 24 hours.

B. After a new calibration, the run must begin with an ICV followed by an ICB and a CRA.

C. QC's and blanks must be run every ten samples or every two hours (whichever is more frequent).

D. A Prep blank, LCS, Duplicate, and Digested Spike must be run for every SDG or every 20 samples within an SDG (soil for soil samples, water for water samples, or both for both matrices).

E. The coefficient variation between duplicate sample injections must be < 20%

F. % Recoveries or limits:

ICV	± 10%
CCV	± 10%
ICB	Less than the lowest standard
CCB	Less than the lowest standard
PB	Less than the lowest standard
PBA	± 15%
LCSW	± 20%
LCSWA	>40%
LCSS	between 117.5 ppb and 980 ppb (ERA 220 7/94)
LCSSA	>40%
SAMPLE-A	± 15%

1. If the ICV fails, the adjustments must be made and the instrument recalibrated.

2. If a CCV fails, the run must be stopped, the instrument recalibrated and the preceding 10 samples must be rerun.

3. If the ICB fails, autozero the instrument, recalibrate and run again. If it still fails, check for contaminants in the furnace water or the matrix modifier.

4. If a CCB fails, stop the run, autozero and recalibrate. The preceding 10 samples must be rerun.

5. If a prep blank fails, rerun once. If it still fails, the samples are contaminated and must be redigested.

6. If PBA fails, the spiking solution must be remade and the PB and PBA must be rerun. If it still fails, there are interferences and the samples must be redigested.

7. If an LCS fails, rerun once. If it still fails, the samples must be redigested.

8. If an LCSA fails, rerun the LCS and LCSA once. If it still fails, there are interferences and the samples must be redigested.

9. If an analytical spike of a sample is between 40% and 85%, an MSA is required. Exception: if the spiked result is > 3 X the value of the sample.

   MSA preparation: Using the sample result, spike the sample at 50%, 100% and 150% of that value using standard solution 1000 ppb. only a single injection is required. If the correlation is below 0.995, rerun once. Report value with the best correlation.

10. If the analytical spike of a sample is < 40%, dilute and rerun.

VII. SAFETY

A. Equipment

1. Lab coat
2. Safety glasses
3. Plastic gloves

B. Potential hazards

1. UV light source is hazardous to the eyes if looked at directly.
2. The furnace temperature is very high. Wait a minute before checking tube in furnace after operating.
3. Fumes emitted from the furnace are potentially hazardous. A ventilation system provided over each furnace to remove these fumes.

VIII. DISPOSAL REQUIREMENTS

A. The samples are held for three months in a storage room.

B. The samples are neutralized and washed down the drain according to SOP 9.1, Hazardous Waste Disposal.

IX. REPORTING REQUIREMENTS

A. 1. The raw data must be recorded in ink and must contain on the first page:

a. Analyst's initials

b. Date

c. Element analyzed

d. Standard source and lot #

e. ICV source

f. Work order

2. Each sample must be identified in the raw data by the appropriate name designated by the client.

3. Each sample must have an analysis time associated with it in the raw data.

4. MSA analysis must be accompanied by the correlation, calculated value, slope, and intercept in the raw data.

5. The following information must be recorded in the Graphite Furnace Run Log (Figure 5): date, element, highest standard, units of highest standard, lamp energy, time, absorbance, analyst's name, work order #, and fractions run.

6. The following information must be recorded on the Antimony Bench Sheet (Figure 4): instrument ID, date of analysis, analyst's name and signature, review date, reviewer's signature, work order number, time analysis initiated.

7. All maintenance, both routine and unexpected, shall be recorded on a Maintenance Log sheet (Figure 6) which is kept in the "Maintenance Log" Book for each instrument.

Figure 1

Furnace Program - main page

PROGRAMMING MODE INSTRUMENT USER METHOD # 29 - SB DATE: _____

ELEMENT: SB WAVELENGTH (NM): 217.6 SLIT (NM): 0.7
PYRO COATED TUBE WITH PLATFORM - MAX POWER HEATING - GAS STOP - MATRIX MOD.
PRETREAT TEMP: 1100 ATOMIZE TEMP: 2400 CHARACT.MASS (PG) 38.0

1.	TECHNIQUE: ZEEMAN	2.	LAMP CURRENT (MA): 0	<< USE EDL
2.	SIGNAL PROCESSING: PEAK AREA	3.	CALIBRATION: LINEAR	
4.	TIME (SECONDS): 5.0	5.	READ DELAY (SECONDS): 0.0	
7.	SCREEN FORMAT: 1.0 GRAPHICS	8.	PRINTER: OFF	<< MUST BE OFF
9.	RECORDER SIGNAL: 0.2 CONT ABS	10.	RECORDER EXP: 1000	
11.	STATISTICS: 2 AVG. & SD & CV	12.	NOMINAL WEIGHT 1.0	
13.	ROLLOVER(ABS): 1.5	14.	BG SCALE: 1.0	

15. S1: <<LEAVE ALL ENTRIES FOR STANDARD EMPTY

Figure 2

Furnace Program - heating times and temperatures

PROGRAMMING MODE INSTRUMENT USER METHOD # 29 - SB DATE: _____

ELEMENT: SB WAVELENGTH (NM): 217.6 SLIT (NM): 0.7
PYRO COATED TUBE WITH PLATFORM - MAX POWER HEATING - GAS STOP - MATRIX MOD.
PRETREAT TEMP: 1100 ATOMIZE TEMP: 2400 CHARACT.MASS (PG) 38.0

STEP NUMBER	FURNACE TEMPERATURE	TIME RAMP	TIME HOLD	INTERNAL GASFLOW	READ	RECORDER
1	120	1	10	300	-	-
2	220	5	5	300	-	-
3	1100	1	10	300	-	-
4	20	1	5	0	-	-
5	2200	0	5	0	*	-
6	2700	1	3	300	-	-

Figure 3

Furnace Program - Autosampler controls

PROGRAMMING MODE AUTOSAMPLER USER METHOD # 29 - SB DATE: _____

SOLUTIONS	LOCATION	VOLUME	BLANK VOLUME
BLANK	--	--	20
STANDARD 1	--	--	—
STANDARD 2	--	--	—
STANDARD 3	--	--	—
STANDARD 4	--	--	—
STANDARD 5	--	--	—
STANDARD 6	--	--	—
STANDARD 7	--	--	—
STANDARD 8	--	--	—
RESLOPE	--	--	—
MATRIX MODIFER 1	--	--	—
MATRIX MODIFER 2	--	--	—
SAMPLE 01 TO 40 WITH MODIFER - - -		20	—
SAMPLE -- TO -- WITH MODIFER - - -		--	—

RECAL LOCATIONS: -- : -- : -- : -- NUMBER OF INJECTIONS: 01

NOTE: Add 20 uL 5% nickel nitrate modifer to 1.0 ml of standards and samples prior to loading onto autosampler.

Figure 4

Dupl. of 95-06-197
95-06-215
95-06-222
95-06-223
95-06-234
95-06-237
95-06-255

95-06-210
95-06-212
95-06-125 PE Page 1

BENCH SHEET
ANTIMONY

DATA FILE: SB70995A
INSTRUMENT FILE: SB70995A

CASE:
INSTRUMENT: 3209

SDG:
ANALYZED: 07/09/95

FU 7-9

SEQ	LAB ID	CLIENT ID	MATRIX	DILUTION	SIZE	VOLUME	%SOLIDS	ANALYZED	
1	0.00 ug/L	S0	WATER	1.00	100.000	100.000	100.00	07/09/95	13:09
2	6.00 ug/L	S6	WATER	1.00	100.000	100.000	100.00	07/09/95	13:12
3	30.0 ug/L	S30	WATER	1.00	100.000	100.000	100.00	07/09/95	13:15
4	150 ug/L	S150	WATER	1.00	100.000	100.000	100.00	07/09/95	13:18
5	ICV	ICV	WATER	1.00	100.000	100.000	100.00	07/09/95	13:21
6	ICB	ICB	WATER	1.00	100.000	100.000	100.00	07/09/95	13:24
7	CRA	CRA	WATER	1.00	100.000	100.000	100.00	07/09/95	13:27
8	9506199-02A	E10-GW01-00-085	WATER	1.00	100.000	100.000	100.00	07/09/95	13:30
9	9506199-02AA	E10-GW01-00-085A	WATER	1.00	100.000	100.000	100.00	07/09/95	13:33
10	9506199-05A	E10-GW01-00-087	WATER	1.00	100.000	100.000	100.00	07/09/95	13:36
11	9506199-05AA	E10-GW01-00-087A	WATER	1.00	100.000	100.000	100.00	07/09/95	13:39
12	9506199-07A	E10-GW01-00-089	WATER	1.00	100.000	100.000	100.00	07/09/95	13:42
13	9506199-07AA	E10-GW01-00-089A	WATER	1.00	100.000	100.000	100.00	07/09/95	13:45
14	9506199-09A	E10-GW01-00-091	WATER	1.00	100.000	100.000	100.00	07/09/95	13:48
15	9506199-09AA	E10-GW01-00-091A	WATER	1.00	100.000	100.000	100.00	07/09/95	13:51
16	CCV1	CCV1	WATER	1.00	100.000	100.000	100.00	07/09/95	13:54
17	CCB1	CCB1	WATER	1.00	100.000	100.000	100.00	07/09/95	13:57
18	9506199-11A	E10-GW01-00-093	WATER	1.00	100.000	100.000	100.00	07/09/95	14:00
19	9506199-11AA	E10-GW01-00-093A	WATER	1.00	100.000	100.000	100.00	07/09/95	14:03
20	9506218-02A	E10-GW02-00-098	WATER	1.00	100.000	100.000	100.00	07/09/95	14:06
21	9506218-02AA	E10-GW02-00-098A	WATER	1.00	100.000	100.000	100.00	07/09/95	14:09
22	9506218-05A	E10-GW02-00-095	WATER	1.00	100.000	100.000	100.00	07/09/95	14:12
23	9506218-05AA	E10-GW02-00-095A	WATER	1.00	100.000	100.000	100.00	07/09/95	14:15
24	9506218-05AD	E10-GW02-00-095D	WATER	1.00	100.000	100.000	100.00	07/09/95	14:18
25	9506218-05ADA	E10-GW02-00-095DA	WATER	1.00	100.000	100.000	100.00	07/09/95	14:21
26	9506218-08A	E10-GW03-00-100	WATER	1.00	100.000	100.000	100.00	07/09/95	14:24
27	9506218-08AA	E10-GW03-00-100A	WATER	1.00	100.000	100.000	100.00	07/09/95	14:27
28	CCV2	CCV2	WATER	1.00	100.000	100.000	100.00	07/09/95	14:30
29	CCB2	CCB2	WATER	1.00	100.000	100.000	100.00	07/09/95	14:33
30	9506218-10A	E10-GW16-00-102	WATER	1.00	100.000	100.000	100.00	07/09/95	14:36
31	9506218-10AA	E10-GW16-00-102A	WATER	1.00	100.000	100.000	100.00	07/09/95	14:39
32	9506220-03A	E36-SW19-00-176	WATER	1.00	100.000	100.000	100.00	07/09/95	14:42
33	9506220-03AA	E36-SW19-00-176A	WATER	1.00	100.000	100.000	100.00	07/09/95	14:45
34	9506222-02A	E33-SW01-00-023	WATER	1.00	100.000	100.000	100.00	07/09/95	14:48
35	9506222-02AA	E33-SW01-00-023A	WATER	1.00	100.000	100.000	100.00	07/09/95	14:51
36	9506222-04A	E33-SW01-00-025	WATER	1.00	100.000	100.000	100.00	07/09/95	14:54
37	9506222-04AA	E33-SW01-00-025A	WATER	1.00	100.000	100.000	100.00	07/09/95	14:57
38	9506222-06A	E33-SW01-00-027	WATER	1.00	100.000	100.000	100.00	07/09/95	15:03
39	9506222-06AA	E33-SW01-00-027A	WATER	1.00	100.000	100.000	100.00	07/09/95	15:06
40	CCV3	CCV3	WATER	1.00	100.000	100.000	100.00	07/09/95	15:09

E. Nicai FU 7-9-95
Analyst / Date

7/12/95
Lab Supervisor / Date

Figure 5

GP ENVIRONMENTAL SERVICES FURNACE RUN LOG

INSTRUMENT ID: 3050 DOCUMENT CONTROL NUMBER:_____ PAGE NO._____

DATE_____ TIME_____ ELEMENT_____ WORK ORDER # / FRACTIONS

HIGHEST STD_____UG/L ABS_____ _____/_____

STD SOURCE_____ ICV SOURCE_____ _____/_____

DATAFILE NAME_____ LAMP ENERGY_____ _____/_____

METHOD FILE_____ FURNACE PROG ____ _____/_____

COMMENTS_____ _____/_____

_____ _____/_____

_____ _____/_____

ANALYST'S NAME_____ _____/_____

DATE_____ TIME_____ ELEMENT_____ WORK ORDER # / FRACTIONS

HIGHEST STD_____UG/L ABS_____ _____/_____

STD SOURCE_____ ICV SOURCE_____ _____/_____

DATAFILE NAME_____ LAMP ENERGY_____ _____/_____

METHOD FILE_____ FURNACE PROG ____ _____/_____

COMMENTS_____ _____/_____

_____ _____/_____

_____ _____/_____

ANALYST'S NAME_____ _____/_____

DATE_____ TIME_____ ELEMENT_____ WORK ORDER # / FRACTIONS

HIGHEST STD_____UG/L ABS_____ _____/_____

STD SOURCE_____ ICV SOURCE_____ _____/_____

DATAFILE NAME_____ LAMP ENERGY_____ _____/_____

METHOD FILE_____ FURNACE PROG ____ _____/_____

COMMENTS_____ _____/_____

_____ _____/_____

_____ _____/_____

ANALYST'S NAME_____ _____/_____

Figure 6

3-27-95 New Graphite tube installed FH.

4-3-95 New Graphite tube installed FH.

4-6-95 Computer screen shaking when instrument is not operational. Turned instrument off. Appears to arise from power source.

4.11.95 Graphite tube changed FH

4-19-95 New graphite tube installed FH

4-27-95 New Graphite tube installed FH

5-3-95 New Graphite tube installed FH

5-11-95 New Graphite tube installed FH
windows cleaned FH.

5-19-95 New Graphite tube installed FH

6-1-95 New Graphite tube installed FH

6-13-95 New graphite tube installed FH

6-27-95 New graphite tube installed FH

7-3-95 New graphite tube installed FH

Figure 7

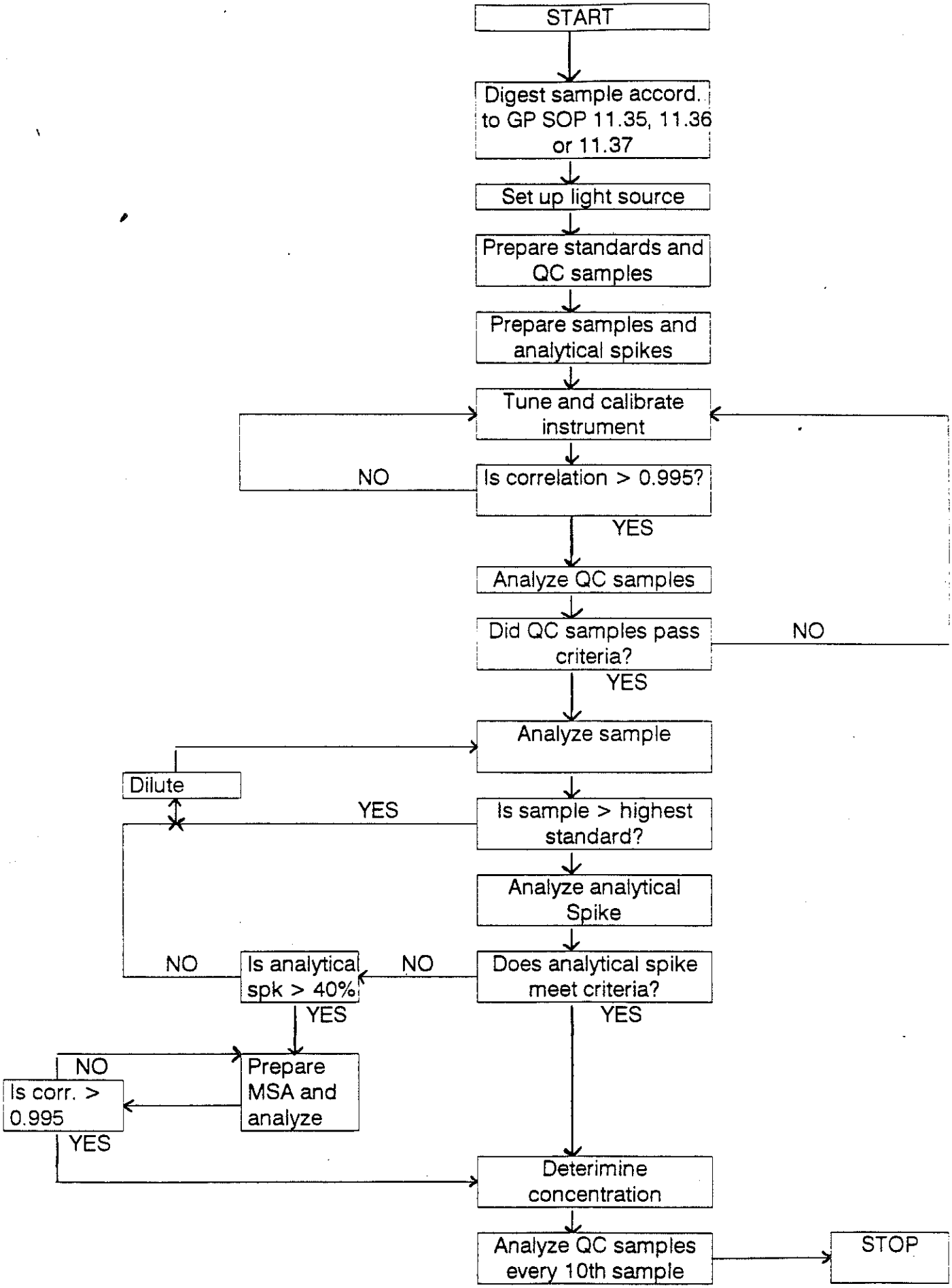
START
Digest sample accord. to GP SOP 11.35, 11.36 or 11.37
Set up light source
Prepare standards and QC samples
Prepare samples and analytical spikes
Tune and calibrate instrument
NO
Is correlation > 0.995?
YES
Analyze QC samples
Did QC samples pass criteria?
NO
YES
Analyze sample
Dilute
YES
Is sample > highest standard?
Analyze analytical Spike
NO
Is analytical spk > 40%
NO
Does analytical spike meet criteria?
YES
YES
NO
Prepare MSA and analyze
Is corr. > 0.995
YES
Deterimine concentration
Analyze QC samples every 10th sample
STOP

Effective Date: July 1995
Version Number: 1
Initiated By :
Approved By :

SOP No.: 11.42

Title : Graphite Furnace Analysis for Lead

Scope : The method detailed in this procedure is for the analysis of water, soil, sediment, sludge or other solid waste digestates for lead by graphite furnace atomic absorption spectroscopy in accordance with SW 846 method 7421.

I. PURPOSE

The quantification of Lead by graphite furnace. All samples are digested in accordance with SOP 11.35 and SOP 11.37 prior to analysis. The holding time is 180 days.

II. REFERENCES

SW 846 method 7421

III. EQUIPMENT AND SUPPLIES

- Eppendorf pipetters and pipette tips
  - 1000 μl
  - 100 μl
  - 20 μl
  - 10 μl
- 5 or 10 ml disposable polystyrene beakers
- 2 ml autoanalysis disposable sample cups
- Perkin Elmer Graphite Furnace (Zeeman 3030)
- Autosampler (AS 60/70)
- Perkin Elmer or Buck Scientific pyrocoated graphite tubes and platforms
- Light Source (Electrodeless Discharge Lamp (EDL) or Hollow Cathode Lamp (HCL))

- Argon gas (cryogenic liquid source)
- EDL Power supply (for an EDL lamp)

IV. REAGENTS

- 1000 ppm certified Pb standard.
- Furnace Water - Deionized water with 1.25% Nitric acid and 0.18% Hydrogen Peroxide

  Add 125 mls of concentrated Nitric acid and 60 mls H_2O_2 (30%) to 10 liters of deionized H_2O.
- Deionized H_2O ASTM Type II or equivalent.
- ICV, CCV and LCS Standards currently supplied by HIGH PURITY STANDARDS.

V. PROCEDURE (See Figure 7 for flow chart)

A. Standard Preparation

1. Prepare a blank with furnace H_2O

2. Prepare Stock Solution 1 (10 ppm) from the 1000 ppm standard solution. Prepare Stock Solution 2 (1000 ppb) from the 10 ppm Stock Solution 1. Prepare the Stock Solution 3 (500 ppb) from the 1000 ppb Stock Solution 2. Prepare Stock Solution 4 (100 ppb) from the 1000 ppb Stock Solution 2. Preparation parameters are given below. Prepare in disposable beakers Standards 1 (75 ppb), 2 (50 ppb), and 3 (3 ppb) from Stock Solutions 2, 3, and 4 as described below.

$$\text{Stock 1} = \frac{(0.02\ \text{ml})(1000\ \text{ppm})}{2\ \text{ml Furnace } H_2O} = 10\ \text{ppm or } 10000\ \text{ppb}$$

$$\text{Stock 2} = \frac{(0.20\ \text{ml})(10\ \text{ppm})}{2\ \text{ml Furnace } H_2O} = 1000\ \text{ppb}$$

$$\text{Stock 3} = \frac{(1.0\ \text{ml})(1000\ \text{ppb})}{2\ \text{ml Furnace } H_2O} = 500\ \text{ppb}$$

$$\text{Stock 4} = \frac{(0.20\ \text{ml})(1000\ \text{ppb})}{2\ \text{ml Furnace } H_2O} = 100\ \text{ppb}$$

$$\text{Std. 1} = \frac{(0.15\ \text{ml})(1000\ \text{ppb})}{2\ \text{ml Furnace } H_2O} = 75\ \text{ppb}$$

$$\text{Std. 2} = \frac{(0.20\ \text{ml})(500\ \text{ppb})}{} = 50\ \text{ppb}$$

$$\text{Std. 3} = \frac{(.03\ \text{ml})(100\ \text{ppb})}{2\ \text{ml Furnace } H_2O} = 3\ \text{ppb}$$

3. 1000 ppb will be used as the analytical spiking solution.

4. Label four sample cups: 3 ppb, 50 ppb, 75 ppb and Blank. Add 1 ml of each concentration of standard to its respective cup and 1 ml of furnace water to the fourth for the blank.

5. Prepare standards daily.

B. QC Preparation

1. Using ICVC, prepare the ICV and CCV's in a sample cup as follows:

$$\frac{(10\ \mu\text{l of ICVC})}{1\ \text{ml}} = \text{a final concentration of } 50.0\ \text{ppb}$$

True Value of ICVC (4/94) = 5000 ppb

2. ICB and CCB preparation is the same as the preparation for the blank standard.

3. A CCV (ICV) and a CCB (ICB) must be run for every ten samples analyzed.

C. Sample Preparation

1. Treat preparation blanks (PB), laboratory control samples (LCS), digested spikes, and duplicates as samples.

2. The LCS soil needs a dilution before analyzing. See the certificate of analysis for the true value to determine what dilution it will require.

3. The LCS water (LCSW = ICVC) does not need dilution. The true value is 50.0

4. To sample cups add one ml of sample.

5. Analytical Spike Preparation

A 20 ppb analytical spike is required of all samples, prep. blanks, LCS's, and duplicates. It is not required on a digested spike.

Prepare an analytical spike (using 1000 ppb spiking solution prepared with the standards) in a sample cup:

$$\frac{(20\ \mu l \text{ of } 1000 \text{ ppb})}{1 \text{ ml}} = 20 \text{ ppb} + \text{the sample concentration}$$

6. The turbidity of drinking water samples must be less than 1.0 NTU before it could be directly analyzed by furnace. If the turbity of the drinking water sample is greater than 1.0 NTU, it must be digested before analyses.

7. Prepare a Lead bench sheet (Figure 4) in the following sequence:

   a) ICV
   b) ICB
   c) CRA (the lowest standard in the calibration line)
   d) PB (either water, soil or both; see QC rules)
   e) PBA
   f) LCS (either water, soil or both)
   g) LCSA
   h) Sample
   i) SampleA
   j) SampleD (duplicate)
   k) SampleDA
   l) SampleS (digested spike)
   m) CCV1
   n) CCB1

   The "A" following the sample indicates the analytical spike. It may be necessary to run a CCV and CCB before 10 samples have been run to avoid splitting up an analytical spike and its sample.

   The Benchsheet is created directly in the computer which utilizes the Multipro software program.
   This program is able to acquire data directly from the instrument.
   To use this program, turn the computer on.
   MENU will appear on the screen with the following submenu:

   1. ANALYST'S NOTEBOOK

   2. NETWORK

   3. EMERGENCY LOCAL ANALYST NOTEBOOK OPERATION

   Type 1 and the password.
   Select the printer to which you want your work directed to.

   The Multipro screen will then appear with the menu:

   "System, Analysis, Methods, Data Entry, Export Data, Reports".

Go to method and load. Press "Enter", and type PB.

Go to "Analysis" select "Add New Run".

Then name your runfile, your initial, date of the run and run number. Press "Enter."

Go to "Incomplete backlog". Here you are automatically loading workorder(s) that you want to run. You can load by department or by testcode.
To load by department, type "INGF", or type "239_2" or "7421" whichever is applicable if you are loading by test code.
The list of workorders will then appear, Press "Enter" on any workorder you choose. Press "F10" when you finish your selection to load the selected workorder(s). Enter "Y" for default of analytical spike "AS."

Go to "Data Entry" and hit "Enter".

Select "Modify data".
Go to Edit Sequence. All the loaded workorder should be here. Modify your benchsheet to reflect what it should look like. Insert the approriate quality controls where they should be by using the insert key.
The quality control requirements must be met.
Please refer to the quality control section of this procedure.
When this is completed then go to "Acquire Data."
Press "Enter" and again press "F10" to commit.
In the default mode type "LR" (Linear Regression).
Enter the number of replicates.
Enter "Y" to to record time of runs.
Then press "F10" one more time to start acquiring your data.

Note: The "PRINT" key on the instrument must be on for the multipro to acquire data.

D. Tuning and Calibration of Instrument

1. Turn on the furnace in the following sequence:

   a. cooling water on

   b. furnace power on

   c. computer screen on

   d. PC computer with attached printer on

2. Make sure there is enough deionized water in the white plastic

water bottle located under the autosampler.

3. Check the graphite tube to see if it is still usable. (Press the "furnace" button to open the furnace where the tube is.) If it is overly charred or bent, replace the tube and platform. Make sure the injection hole is lined up correctly.

4. Attach the light source (EDL or HCL).

   a. For EDL:

      1) Attach to cable running to EDL power supply.
      2) Turn on power supply.
      3) Start the UV light with the "UV starter".
      4) Turn the power supply to 8 watts.

   b. For HCL:
      1) Plug into GFA
      2) Set to 10 amps on program page. (later)

5. Press "user index" control key to find user index page.

6. Select the method # that corresponds to Lead by entering in the number and pressing "recall" control key. A method that has already been set up will appear (Figure 1).

7. Set the wavelength at 283.3. Set the slit width at 0.7 nm.

8. Press the "set up" control key for the "SET UP MODE INSTRUMENT" page. Adjust the lamp by turning the metal knobs by the lamp to gain the maximum energy. Press the "gain" key to rescale and increase energy. The energy should be approximately 50. The lamp will need some time to warm up (15-30 min.).

9. Go to the "PROGRAM INSTRUMENT MODE" page by pressing the "prog" key. Advance or backup through this page by using the keys at the bottom. This page should appear as shown in Figure 1. If using a hollow cathode lamp, set the amps at 10 or whatever is required by the lamp manufacturer.

10. Press the "prog" button again for the "PROGRAM MODE HGA 600" page. Use the keys on the bottom to move around the screen. The first two steps are the drying temperatures; the second two are the pretreat temps.; the third is the atomization temp.; and the last is the burn off temperature. The ramp time is the time the furnace takes to reach the corresponding temperature and the hold time is how long that temperature is held before the next step. The set up on this page should be as described in Figure 2.

11. Press the "prog" button again to go to the "PROGRAMMING MODE AUTOSAMPLER" page. Use the keys at the bottom to move around the screen. Enter the location of which your standards (1-4) and samples (starting at location 5) are in the autosampler. Enter in the injection volume specified for the standards and samples (See Figure 3). Now you are ready to begin the analysis.

E. Sample Analysis

1. Press the "run" button and a screen with a blank graph will appear.

2. If a "check" key at the bottom of the page appears, press this first. This will tell you if there is anything wrong with the program set up.

3. Now press the "sampler reset" key at the bottom of the screen. This resets the autosampler.

4. Now press the "sampler on/off" key at the bottom of the screen. This starts and stops the autosampler.

5. Make sure the printer is on line and press the print key to print out the results.

6. When the last standard is running, press the "autosampler on/off" key again to stop after the last standard. Check the calibration. The correlation must be at least .995 or better.

7. Record the absorbance of the highest standard in the Graphite Furnace Run Log (Figure 5) located at each furnace instrument.

8. Enter in the number of the first sample in the autosampler, a period and then the number of the last sample (ex. 1.32). This will tell the autosampler where to stop. Now press the "autosampler on/off" key again to start the analysis of the samples.

9. A "run finished" will appear on the screen when the run is completed.

10. Fill out the Graphite Furnace Run Log (Figure 5) for samples or cases run that day.

Other key functions:

11. "Cont" enables you to see a bar graph of the relative signal. Also, by using the keys at the bottom of the screen, the instrument can be autozeroed, the injector can be flushed with

DI water, and the injector can be moved into and out of the DI water.

12. "Display Graph" displays the graph of the sample that was run last.

13. "Display Calib." displays the calibration curve.

14. "Display Suppl" displays the absorbances and the results.

15. "New keys" allows you to start the calibration from the middle if one of the calibration points was off.

16. "Store" stores the method in the user index.

17. "Print Screen" prints the screen displayed.

18. "Print" prints the results.

The keys at the bottom of the display screens:

19. "HGA on/off" turns the furnace on or off.

20. "Manual temp." turns the furnace temp. on until you press it again.

21. "Skip Step" skips the current step and progresses to the next one.

22. "Manual Position" tell the autosampler to run the specific sample entered.

F. Trouble Shooting and Corrective Action

1. The calibration curve is below .995.

   a. The standards may need to be remade.

   b. The temperatures or times may need to be adjusted.

2. The values are all coming out very low or zero.

   a. Make sure the autosampler is injecting into the graphite tube.

3. The values are low.

   a. The tube may need changing.

4. "High tube impedence" error message appears.

a. The tube needs changing.

5. "The instrument cannot set gain (no energy)" error message appears.

a. Check the wavelength

b. Check to see if the power supply is on.

c. Make sure nothing is blocking the light source.

d. Check to see if the correct lamp is connected.

6. ICV fails

a. Check absorbances of standards for possibility of incorrect dilution.

b. Remake ICV and if it still fails, recalibrate and try again.

7. High negative values.

a. There is a high matrix interference and the sample needs to be diluted.

G. Calculations

1. % Recovery for ICV, CCV's, LCS

$$\frac{\text{Obtained value}}{\text{True Value}} \times 100$$

2. % Recovery for spikes and analytical spikes.

$$\frac{\text{Spike value} - \text{Sample value}}{\text{Spiked conc.}} \times 100$$

3. If the value is below the IDL, a zero is used for calculations.

VI. QUALITY CONTROL

A. The instrument must be calibrated every time a new run is started or every 24 hours.

B. After a new calibration, the run must begin with an ICV followed by an ICB and a CRA.

C. QC's and blanks must be run every ten samples or every two hours (whichever is more frequent).

D. A Prep blank, LCS, Duplicate, and Digested Spike must be run for every SDG or every 20 samples within an SDG (soil for soil samples, water for water samples, or both for both matrices).

E. The coefficient variation must be < 20%

G. % Recoveries or limits:

ICV	± 10%
CCV	± 10%
ICB	Less than lowest standard
CCB	Less than lowest standard
PB	Less than lowest standard
PBA	± 15%
LCSW	± 20%
LCSWA	>40%
LCSS	between 560 ppb and 1455 ppb (ERA 4/94)
LCSSA	>40%
SAMPLE-A	± 15%

1. If the ICV fails, the adjustments must be made and the instrument recalibrated.

2. If a CCV fails, the run must be stopped, the instrument recalibrated and the preceding 10 samples must be rerun.

3. If the ICB fails, autozero the instrument, recalibrate and run again. If it still fails, check for contaminants in the furnace water or the matrix modifier.

4. If a CCB fails, stop the run, autozero and recalibrate. The preceding 10 samples must be rerun.

5. If a prep blank fails, rerun once. If it still fails, the samples are contaminated and must be redigested.

6. If PBA fails, the spiking solution must be remade and the PB and PBA must be rerun. If it still fails, there are interferences and the samples must be redigested.

7. If an LCS fails, rerun once. If it still fails, the samples must be redigested.

8. If an LCSA fails, rerun the LCS and LCSA once. If it still fails, there are interferences and the samples must be redigested.

9. If an analytical spike of a sample is between 40% and 85%, an MSA is required. Exception: if the spiked result is > 3 X the value of the sample.

MSA preparation: Using the sample result, spike the sample at 50%, 100%, and 150% of that value using the standard solution 1000 ppb. Only a single injection is required. If the correlation is below 0.995, rerun once. Report the value with the best correlation.

10. If the analytical spike of a sample is < 40%, dilute and rerun.

VII. SAFETY

A. Equipment

1. Lab coat

2. Safety glasses

3. Plastic gloves

B. Potential hazards

1. UV light source is hazardous to the eyes if looked at directly.

2. The furnace temperature is very high. Wait a minute before checking tube in furnace after operating.

3. Fumes emitted from the furnace are potentially hazardous. A ventilation system provided over each furnace to remove these fumes.

VIII. DISPOSAL REQUIREMENTS

A. The samples are held for three months in a storage room.

B. The samples are neutralized and washed down the drain according to SOP 9.1, Hazardous Waste Disposal.

IX. REPORTING REQUIREMENTS

A. 1. The raw data must be recorded in ink and must contain on the first page:

a. Analyst's initials

b. Date

c. Element analyzed

d. Standard source and lot #

e. ICV source

f. Work order

2. Each sample must be identified in the raw data by the appropriate name designated by the client.

3. Each sample must have an analysis time associated with it in the raw data.

4. MSA analysis must be accompanied by the correlation, calculated value, slope, and intercept in the raw data.

5. The following information must be recorded in the Graphite Furnace Run Log (Figure 5): date, element, highest standard, units of highest standard, lamp energy, time, absorbance, analyst's name, work order #, and fractions run.

6. The following information must be recorded on the Lead Bench Sheet (Figure 4): instrument ID, date of analysis, analyst's name and signature, review date, reviewer's signature, work order number, time analysis initiated.

7. All maintenance, both routine and unexpected, shall be recorded on a Maintenance Log sheet (Figure 6) which is kept in the "Maintenance Log" Book for each instrument.

Figure 1

Furnace Program - main page

PROGRAMMING MODE INSTRUMENT USER METHOD # 2 - PB DATE: _____

ELEMENT: PB WAVELENGTH (NM): 283.3 SLIT (NM): 0.7
PYRO COATED TUBE WITH PLATFORM - MAX POWER HEATING - GAS STOP - MATRIX MOD.
PRETREAT TEMP: 900 ATOMIZE TEMP: 1800 CHARACT.MASS (PG) 12.0

1.	TECHNIQUE: ZEEMAN	2.	LAMP CURRENT (MA): 0	<< USE EDL
2.	SIGNAL PROCESSING: PEAK AREA	3.	CALIBRATION: LINEAR	
4.	TIME (SECONDS): 5.0	5.	READ DELAY (SECONDS): 0.0	
7.	SCREEN FORMAT: 0.5 GRAPHICS	8.	PRINTER: OFF	<< MUST BE OFF
9.	RECORDER SIGNAL: 0.2 CONT ABS	10.	RECORDER EXP: 1000	
11.	STATISTICS: 2 AVG. & SD & CV	12.	NOMINAL WEIGHT 1.0	
13.	ROLLOVER(ABS): 2.0	14.	BG SCALE: 0.5	

15. S1: <<LEAVE ALL ENTRIES FOR STANDARD EMPTY

Figure 2

Furnace Program - heating times and temperatures

PROGRAMMING MODE INSTRUMENT USER METHOD # 2 - PB DATE: _____

ELEMENT: PB WAVELENGTH (NM): 283.3 SLIT (NM): 0.7
PYRO COATED TUBE WITH PLATFORM - MAX POWER HEATING - GAS STOP - MATRIX MOD.
PRETREAT TEMP: 900 ATOMIZE TEMP: 1800 CHARACT.MASS (PG) 12.0

STEP NUMBER	FURNACE TEMPERATURE	TIME RAMP	TIME HOLD	INTERNAL GASFLOW	READ	RECORDER
1	120	1	10	300	-	-
2	220	5	5	300	-	-
3	900	1	10	300	-	-
4	20	1	5	0	-	-
5	1800	0	5	0	*	-
6	2650	1	4	300	-	-

Figure 3

Furnace Program - Autosampler controls

PROGRAMMING MODE AUTOSAMPLER USER METHOD # 2 - PB DATE: _____

SOLUTIONS	LOCATION	VOLUME	BLANK VOLUME
BLANK	--	--	20
STANDARD 1	--	--	__
STANDARD 2	--	--	__
STANDARD 3	--	--	__
STANDARD 4	--	--	__
STANDARD 5	--	--	__
STANDARD 6	--	--	__
STANDARD 7	--	--	__
STANDARD 8	--	--	__
RESLOPE	--	--	__
MATRIX MODIFER 1	--	--	__
MATRIX MODIFER 2	--	--	__
SAMPLE 01 TO 40 WITH MODIFER - - -		20	__
SAMPLE -- TO -- WITH MODIFER - - -		--	__

RECAL LOCATIONS: -- : -- : -- : -- NUMBER OF INJECTIONS: 01

NOTE: Add 20 uL 10% ammoniumphosphate (NH4H2PO4) modifer to 1.0 ml of standards and samples prior to loading onto autosampler.

Figure 4

95-06-143
95-06-148
95-06-149
95-06-179
95-06-220

BENCH SHEET
239_2 or 7421

Page 1

TA FILE: PB71095A
STRUMENT FILE: PB71095A

CASE:
INSTRUMENT: 3051

SDG: FCL 7-10
ANALYZED: 07/10/95

D	LAB ID	CLIENT ID	MATRIX	DILUTION	SIZE	VOLUME	%SOLIDS	ANALYZED	
1	0.00 ug/L	S0	WATER	1.00	100.000	100.000	100.00	07/10/95	06:24
2	3.00 ug/L	S3	WATER	1.00	100.000	100.000	100.00	07/10/95	06:27
3	20.0 ug/L	S20	WATER	1.00	100.000	100.000	100.00	07/10/95	06:30
4	75.0 ug/L	S75	WATER	1.00	100.000	100.000	100.00	07/10/95	06:33
5	ICV	ICV	WATER	1.00	100.000	100.000	100.00	07/10/95	06:36
6	ICB	ICB	WATER	1.00	100.000	100.000	100.00	07/10/95	06:39
7	CRA	CRA	WATER	1.00	100.000	100.000	100.00	07/10/95	06:42
8	PBW 07-07-95	PBW 07-07-95	WATER	1.00	100.000	100.000	100.00	07/10/95	06:45
9	PBW 07-07-95A	PBW 07-07-95A	WATER	1.00	100.000	100.000	100.00	07/10/95	06:48
1	PBS 07-07-95	PBS 07-07-95	SOIL	1.00	1.000	100.000	100.00	07/10/95	06:51
1	PBS 07-07-95A	PBS 07-07-95A	SOIL	1.00	1.000	100.000	100.00	07/10/95	06:54
2	LCSW	LCSW	WATER	1.00	100.000	100.000	100.00	07/10/95	06:57
3	LCSWA	LCSWA	WATER	1.00	100.000	100.000	100.00	07/10/95	07:00
4	LCSS	LCSS	SOIL	10.00	1.000	100.000	100.00	07/10/95	07:03
5	LCSSA	LCSSA	SOIL	10.00	1.000	100.000	100.00	07/10/95	07:06
6	CCV1	CCV1	WATER	1.00	100.000	100.000	100.00	07/10/95	07:09
7	CCB1	CCB1	WATER	1.00	100.000	100.000	100.00	07/10/95	07:12
8	9506132-02E	E36-SW24-00-126	WATER	1.00	100.000	100.000	100.00	07/10/95	07:15
19	9506132-02EA	E36-SW24-00-126A	WATER	1.00	100.000	100.000	100.00	07/10/95	07:18
20	9506132-02ED	E36-SW24-00-126D	WATER	1.00	100.000	100.000	100.00	07/10/95	07:21
21	9506132-02EDA	E36-SW24-00-126DA	WATER	1.00	100.000	100.000	100.00	07/10/95	07:24
22	9506132-02ES	E36-SW24-00-126S	WATER	1.00	100.000	100.000	100.00	07/10/95	07:27
23	9506132-04E	E36-SW24-00-129	WATER	1.00	100.000	100.000	100.00	07/10/95	07:30
24	9506132-04EA	E36-SW24-00-129A	WATER	1.00	100.000	100.000	100.00	07/10/95	07:33
25	9506132-06E	E36-SW26A-00-133	WATER	1.00	100.000	100.000	100.00	07/10/95	07:36
26	9506132-06EA	E36-SW26A-00-133A	WATER	1.00	100.000	100.000	100.00	07/10/95	07:39
27	CCV2	CCV2	WATER	1.00	100.000	100.000	100.00	07/10/95	07:42
28	CCB2	CCB2	WATER	1.00	100.000	100.000	100.00	07/10/95	07:45
29	9506133-01E	E36-SD24-01-128	SOIL	1.00	1.000	100.000	51.20	07/10/95	07:48
30	9506133-01EA	E36-SD24-01-128A	SOIL	1.00	1.000	100.000	51.20	07/10/95	07:51
31	9506133-02E	E36-SS24-01-131	SOIL	1.00	1.000	100.000	70.10	07/10/95	07:54
32	9506133-02EA	E36-SS24-01-131A	SOIL	1.00	1.000	100.000	70.10	07/10/95	07:57
33	9506133-03E	E36-SS19-01-139	SOIL	1.00	1.000	100.000	82.30	07/10/95	08:03
34	9506133-03EA	E36-SS19-01-139A	SOIL	1.00	1.000	100.000	82.30	07/10/95	08:06
35	9506133-04E	E36-SD24-01-132	SOIL	1.00	1.000	100.000	33.50	07/10/95	08:09
36	9506133-04EA	E36-SD24-01-132A	SOIL	1.00	1.000	100.000	33.50	07/10/95	08:12
37	9506133-05E	E36-SD26A-01-135	SOIL	1.00	1.000	100.000	80.70	07/10/95	08:15
38	9506133-05EA	E36-SD26A-01-135A	SOIL	1.00	1.000	100.000	80.70	07/10/95	08:18
39	CCV3	CCV3	WATER	1.00	100.000	100.000	100.00	07/10/95	08:21
40	CCB3	CCB3	WATER	1.00	100.000	100.000	100.00	07/10/95	08:24

Analyst / Date

Lab Supervisor / Date

Figure 5

GP ENVIRONMENTAL SERVICES FURNACE RUN LOG

INSTRUMENT ID: 3050 DOCUMENT CONTROL NUMBER:_____ PAGE NO._____

DATE_____ TIME_____ ELEMENT_____ WORK ORDER # / FRACTIONS

HIGHEST STD_____UG/L ABS_____ _____/_____

STD SOURCE_____ ICV SOURCE_____ _____/_____

DATAFILE NAME_____ LAMP ENERGY_____ _____/_____

METHOD FILE_____ FURNACE PROG ____ _____/_____

COMMENTS_____ _____/_____

_____ _____/_____

_____ _____/_____

ANALYST'S NAME_____ _____/_____

DATE_____ TIME_____ ELEMENT_____ WORK ORDER # / FRACTIONS

HIGHEST STD_____UG/L ABS_____ _____/_____

STD SOURCE_____ ICV SOURCE_____ _____/_____

DATAFILE NAME_____ LAMP ENERGY_____ _____/_____

METHOD FILE_____ FURNACE PROG ____ _____/_____

COMMENTS_____ _____/_____

_____ _____/_____

_____ _____/_____

ANALYST'S NAME_____ _____/_____

DATE_____ TIME_____ ELEMENT_____ WORK ORDER # / FRACTIONS

HIGHEST STD_____UG/L ABS_____ _____/_____

STD SOURCE_____ ICV SOURCE_____ _____/_____

DATAFILE NAME_____ LAMP ENERGY_____ _____/_____

METHOD FILE_____ FURNACE PROG ____ _____/_____

COMMENTS_____ _____/_____

_____ _____/_____

_____ _____/_____

ANALYST'S NAME_____ _____/_____

Figure 6

3-27-95 New Graphite tube installed FCL.

4-3-95 New Graphite tube installed FCL.

4-6-95 Computer screen shaking when instrument is not operational. Turned instrument off. Appears to arise from power source.

4.11.95 Graphite tube changed FCL

4-19-95 New graphite tube installed FCL

4-27-95 New Graphite tube installed FCL

5-3-95 New Graphite tube installed FCL

5-11-95 New Graphite tube installed FCL
windows cleaned FCL.

5-18-95 New Graphite tube installed FCL

6-1-95 New Graphite tube installed FCL

6-13-95 New graphite tube installed FCL

6-27-95 New graphite tube installed FCL

7-3-95 New graphite tube installed FCL

Figure 7

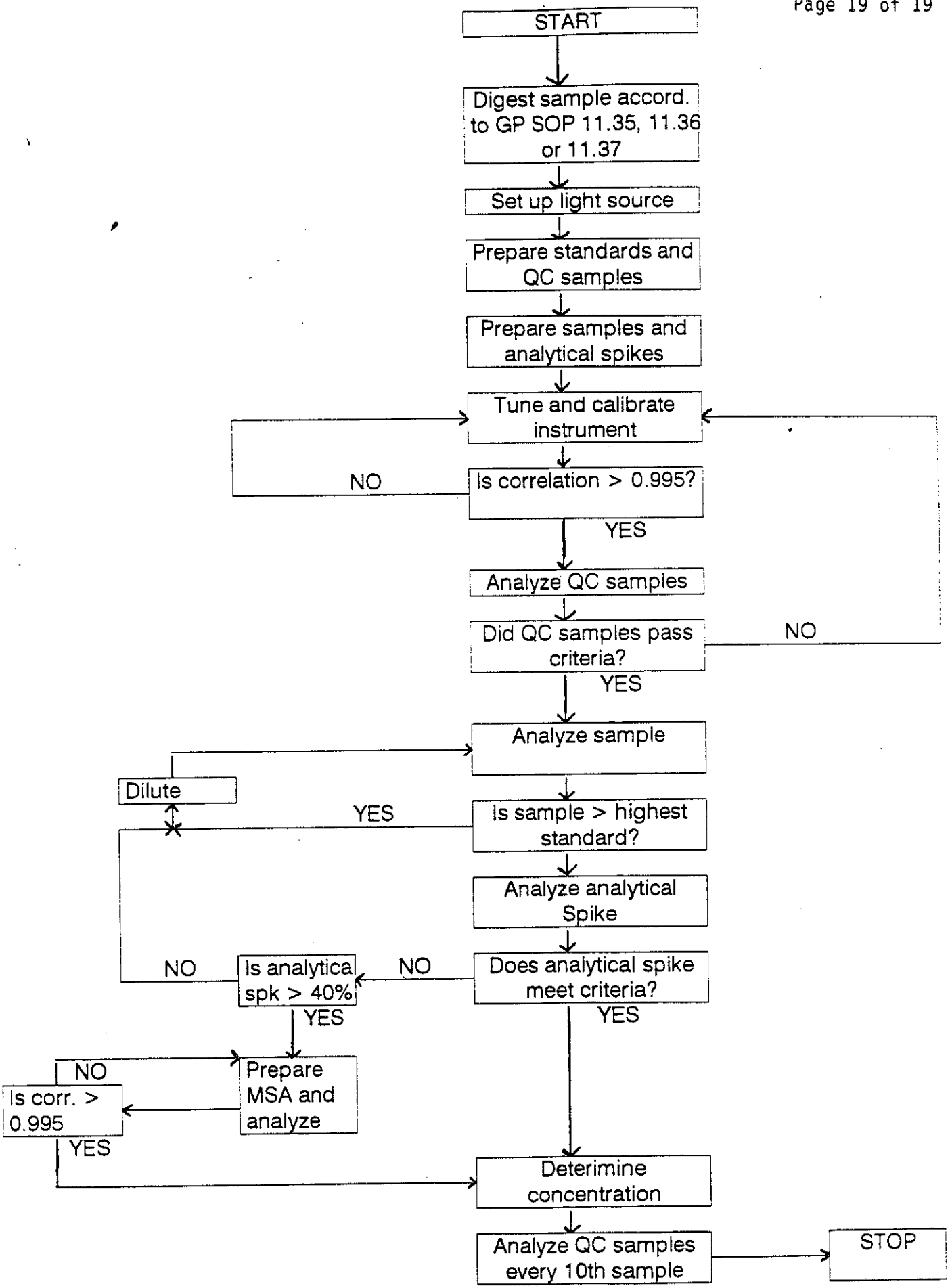
START
Digest sample accord. to GP SOP 11.35, 11.36 or 11.37
Set up light source
Prepare standards and QC samples
Prepare samples and analytical spikes
Tune and calibrate instrument
Is correlation > 0.995?
NO
YES
Analyze QC samples
Did QC samples pass criteria?
NO
YES
Analyze sample
Dilute
Is sample > highest standard?
YES
Analyze analytical Spike
Does analytical spike meet criteria?
NO
YES
Is analytical spk > 40%
NO
YES
Prepare MSA and analyze
Is corr. > 0.995
NO
YES
Deterimine concentration
Analyze QC samples every 10th sample
STOP

Effective Date: July 1995
Version Number: 1
Initiated By :
Approved By :

SOP No.: 11.45

Title : Graphite Furnace Analysis for Selenium

Scope : The method detailed in this procedure is for the analysis of water, soil, sediment, sludge and other solid wastes digestates for selenium by graphite furnace atomic absorption spectroscopy in accordance with SW 846 method 7740.

I. PURPOSE

The quantification of Selenium by graphite furnace. All samples are digested in accordance with SOP 11.35 and SOP 11.37 prior to analysis. The holding time is 180 days.

II. REFERENCES

SW 846 method 7740

III. EQUIPMENT AND SUPPLIES

- Eppendorf pipetters and pipette tips
  - 1000 μl
  - 100 μl
  - 20 μl
  - 10 μl
- 5 or 10 ml disposable polystyrene beakers
- 2 ml autoanalysis disposable sample cups
- Perkin Elmer Graphite Furnace (Zeeman 3030)
- Autosampler (AS 60/70)
- Perkin Elmer or Buck Scientific pyrocoated graphite tubes and platforms
- Light Source (Electrodeless Discharge Lamp (EDL) or Hollow Cathode Lamp (HCL))

- Argon gas (cryogenic liquid source)
- EDL Power supply (for an EDL lamp)

IV. REAGENTS

- 5% Nickel Nitrate solution:

  Dissolve 24.78 grams if ACS reagent grade $Ni(NO_3)2 \times 6\ H_2O$ in deionized water and bring to 100 ml in volumetric flask.

- 1000 ppm certified Se standard.
- Furnace Water - Deionized water with 1.25% Nitric acid and 0.18% Hydrogen Peroxide

  Add 125 mls of concentrated Nitric acid and 60 mls H_2O_2 (30%) to 10 liters of deionized H_2O.

- Deionized H_2O ASTM Type II or equivalent.
- ICV, CCV and LCS Standards currently supplied by HIGH PURITY STANDARDS

V. PROCEDURE (See Figure 7 for flow chart)

A. Standard Preparation

1. Prepare a blank with furnace H_2O

2. Prepare Stock Solution 1 (10 ppm) from the 1000 ppm standard solution. Prepare Stock Solution 2 (1000 ppb) from the 10 ppm Stock Solution 1. Prepare Stock Solution 3 (500 ppb) from the 1000 ppb Stock Solution 2. Preparation parameters are given below. Prepare in disposable beakers Standards 1 (5 ppb), 2 (10 ppb), 3 (50 ppb), and 4 (100 ppb) from the 1000 ppm stock Selenium solution as described below.

$$\text{Stock 1} = \frac{(0.02\ \text{ml})(1000\ \text{ppm})}{2\ \text{ml Furnace } H_2O} = 10\ \text{ppm or } 10000\ \text{ppb}$$

$$\text{Stock 2} = \frac{(0.20\ \text{ml})(10\ \text{ppm})}{2\ \text{ml Furnace } H_2O} = 1000\ \text{ppb}$$

$$\text{Stock 3} = \frac{(1.0\ \text{ml})(1000\ \text{ppb})}{2\ \text{ml Furnace } H_2O} = 500\ \text{ppb}$$

$$\text{Std. 1} = \frac{(0.20\ \text{ml})(1000\ \text{ppb})}{2\ \text{ml Furnace } H_2O} = 100\ \text{ppb}$$

$$\text{Std. 2} = \frac{(0.20\ \text{ml})(500\ \text{ppb})}{} = 50\ \text{ppb}$$

$$\text{Std. 3} = \frac{(0.20\ \text{ml})(100\ \text{ppb})}{2\ \text{ml Furnace } H_2O} = 10\ \text{ppb}$$

$$\text{Std. 4} = \frac{(50\ \mu\text{l})(100\ \text{ppb})}{1.0\ \text{ml Furnace } H_2O} = 5\ \text{ppb}$$

3. 500 ppb will be used as the analytical spiking solution.

4. Label five sample cups: 5 ppb, 10 ppb, 50 ppb, 100 ppb and Blank. Add 20 μl of the 5% Nickel Nitrate solution to five sample cups and add 1 ml of each concentration of standard to its respective cup and 1 ml of furnace water to the fifth for the blank.

5. Prepare standards daily.

B. QC Preparation

1. Using ICVC, prepare the ICV and CCV's in a sample cup with 20 μl of the 5% Nickel Nitrate solution as follows:

$$\frac{(10\ \mu\text{l of ICVC})}{1\ \text{ml}} = \text{a final concentration of } 50.0\ \text{ppb}$$

True Value of ICVC = 5000 ppb

2. ICB and CCB preparation is the same as the preparation for the blank standard.

3. A CCV (ICV) and a CCB (ICB) must be run for every ten samples analyzed, at the beginning of the run and at the end of the run.

C. Sample Preparation

1. Treat preparation blanks (PB), laboratory control samples (LCS), digested spikes, and duplicates as samples.

2. The LCS soil needs a dilution before analyzing. Refer to the certificate of analysis for the true value to determine what dilution it will require.

3. The LCS water (LCSW = ICVC) needs no dilution. The true value is 50.0.

4. Add 20 μl of the 5% Nickel Nitrate solution to all sample cups to be used for the analysis.

5. To these sample cups add one ml of sample.

6. Analytical Spike Preparation

A 10 ppb analytical spike is required of all samples, prep. blanks, LCS's, and duplicates. It is not required on a digested spike.

Prepare an analytical spike (using 500 ppb spiking solution prepared with the standards) in a sample cup with 20 μl of the 5% Nickel Nitrate solution as follows:

$$\frac{(20\ \mu l \text{ of } 500 \text{ ppb})}{1 \text{ ml}} = 10 \text{ ppb} + \text{the sample concentration}$$

7. Prepare the Selenium (Figure 4) bench sheet in the following sequence:

a) ICV
b) ICB
c) CRA (the lowest standard in the calibration line)
d) PB (either water, soil or both; see QC rules)
e) PBA
f) LCS (either water, soil or both)
g) LCSA
h) Sample
i) SampleA
j) SampleD (duplicate)
k) SampleDA
l) SampleS (digested spike)
m) CCV1
n) CCB1

The "A" following the sample indicates the analytical spike. It may be necessary to run a CCV and CCB before 10 samples have been run to avoid splitting up an analytical spike and its sample.

The Benchsheet is created directly in the computer which utilizes the Multipro software program.
This program is able to acquire data directly from the instrument.
To use this program, turn the computer on.
MENU will appear on the screen with the following submenu:

1. ANALYST'S NOTEBOOK

2. NETWORK

3. EMERGENCY LOCAL ANALYST NOTEBOOK OPERATION

Type 1 and the password.

Select the printer to which you want your work directed to.

The Multipro screen will then appear with the menu:

"System, Analysis, Methods, Data Entry, Export Data, Reports".

Go to method and load. Press "Enter", and type SE.

Go to "Analysis" select "Add New Run".

Then name your runfile, your initial, date of the run and run number. Press "Enter."

Go to "Incomplete backlog". Here you are automatically loading workorder(s) that you want to run. You can load by department or by testcode.
To load by department, type "INGF", or type "270_2" or "7740" whichever is applicable if you are loading by test code.
The list of workorders will then appear, Press "Enter" on any workorder you choose. Press "F10" when you finish your selection to load the selected workorder(s). Enter "Y" for default of analytical spike "AS."

Go to "Data Entry" and hit "Enter".

Select "Modify data".
Go to Edit Sequence. All the loaded workorder should be here. Modify your benchsheet to reflect what it should look like. Insert the approriate quality controls where they should be by using the insert key.
The quality control requirements must be met.
Please refer to the quality control section of this procedure.
When this is completed then go to "Acquire Data."
Press "Enter" and again press "F10" to commit.
In the default mode type "LR" (Linear Regression).
Enter the number of replicates.
Enter "Y" to to record time of runs.
Then press "F10" one more time to start acquiring your data.

Note: The "PRINT" key on the instrument must be on for the multipro to acquire data.

D. Tuning and Calibration of Instrument

1. Turn on the furnace in the following sequence:

   a. cooling water on

   b. furnace power on

   c. computer screen on

d. PC computer with attached printer on

2. Make sure there is enough deionized water in the white plastic water bottle located under the autosampler.

3. Check the graphite tube to see if it is still usable. (Press the "furnace" button to open the furnace where the tube is.) If it is overly charred or bent, replace the tube and platform. Make sure the injection hole is lined up correctly.

4. Attach the light source (EDL or HCL).

   a. For EDL:

      1) Attach to cable running to EDL power supply.
      2) Turn on power supply.
      3) Start the UV light with the "UV starter".
      4) Turn the power supply to 250.

   b. For HCL:
      1) Plug into GFA
      2) Set to 10 amps on program page. (later)

5. Press "user index" control key to find user index page.

6. Select the method # that corresponds to Selenium by entering in the number and pressing "recall" control key. A method that has already been set up will appear (Figure 1).

7. Set the wavelength at 196.0. Set the slit width at 0.7 nm.

8. Press the "set up" control key for the "SET UP MODE INSTRUMENT" page. Adjust the lamp by turning the metal knobs by the lamp to gain the maximum energy. Press the "gain" key to rescale and increase energy. The energy should be approximately 50. The lamp will need some time to warm up (15-30 min.).

9. Go to the "PROGRAM INSTRUMENT MODE" page by pressing the "prog" key. Advance or backup through this page by using the keys at the bottom. This page should appear as shown in Figure 1. If using a hollow cathode lamp, set the amps at 10 or whatever is required by the lamp manufacturer.

10. Press the "prog" button again for the "PROGRAM MODE HGA 600" page. Use the keys on the bottom to move around the screen. The first two steps are the drying temperatures; the second two are the pretreat temps.; the third is the atomization temp.; and the last is the burn off temperature. The ramp time is the time the furnace takes to reach the corresponding temperature and the hold time is how long that temperature is

held before the next step. The set up on this page should be as described in Figure 2.

11. Press the "prog" button again to go to the "PROGRAMMING MODE AUTOSAMPLER" page. Use the keys at the bottom to move around the screen. Enter the location of which your standards (1-4) and samples (starting at location 5) are in the autosampler. Enter in the injection volume specified for the standards and samples (See Figure 3). Now you are ready to begin the analysis.

E. Sample Analysis

1. Press the "run" button and a screen with a blank graph will appear.

2. If a "check" key at the bottom of the page appears, press this first. This will tell you if there is anything wrong with the program set up.

3. Now press the "sampler reset" key at the bottom of the screen. This resets the autosampler.

4. Now press the "sampler on/off" key at the bottom of the screen. This starts and stops the autosampler.

5. Make sure the printer is on line and press the print key to print out the results.

6. When the last standard is running, press the "autosampler on/off" key again to stop after the last standard. Check the calibration. The correlation must be at least .995 or better.

7. Record the absorbance of the highest standard in the Graphite Furnace Run Log (Figure 5), located at each furnace instrument.

8. Enter in the number of the first sample in the autosampler, a period and then the number of the last sample (ex. 1.32). This will tell the autosampler where to stop. Now press the "autosampler on/off" key again to start the analysis of the samples.

9. A "run finished" will appear on the screen when the run is completed.

10. Fill in the Furnace run log (figure 5)

Other key functions:

11. "Cont" enables you to see a bar graph of the relative signal.

Also, by using the keys at the bottom of the screen, the instrument can be autozeroed, the injector can be flushed with DI water, and the injector can be moved into and out of the DI water.

12. "Display Graph" displays the graph of the sample that was run last.

13. "Display Calib." displays the calibration curve.

14. "Display Suppl" displays the absorbances and the results.

15. "New keys" allows you to start the calibration from the middle if one of the calibration points was off.

16. "Store" stores the method in the user index.

17. "Print" sends the output to the LIMS.

The keys at the bottom of the display screens:

18. "HGA on/off" turns the furnace on or off.

19. "Manual temp." turns the furnace temp. on until you press it again.

20. "Skip Step" skips the current step and progresses to the next one.

21. "Manual Position" tell the autosampler to run the specific sample entered.

F. Trouble Shooting and Corrective Action

1. The calibration curve is below .995.

   a. The standards may need to be remade.

   b. The temperatures or times may need to be adjusted.

2. The values are all coming out very low or zero.

   a. Make sure the autosampler is injecting into the graphite tube.

3. The values are low.

   a. The tube may need changing.

4. "High tube impedence" error message appears.

a. The tube needs changing.

5. "The instrument cannot set gain (no energy)" error message appears.

a. Check the wavelength

b. Check to see if the power supply is on.

c. Make sure nothing is blocking the light source.

d. Check to see if the correct lamp is connected.

6. ICV fails

a. Check absorbances of standards for possibility of incorrect dilution.

b. Remake ICV and if it still fails, recalibrate and try again.

7. High negative values.

a. There is a high matrix interference and the sample needs to be diluted.

G. Calculations

1. % Recovery for ICV, CCV's, LCS

$$\frac{\text{Obtained value}}{\text{True Value}} \times 100$$

2. % Recovery for spikes and analytical spikes.

$$\frac{\text{Spike value} - \text{Sample value}}{\text{Spiked conc.}} \times 100$$

3. If the value is below the IDL, a zero is used for calculations.

VI. Quality Control

A. The instrument must be calibrated every time a new run is started or every 24 hours.

B. After a new calibration, the run must begin with an ICV followed by an ICB and a CRA.

C. QC's and blanks must be run every ten samples or every two hours (whichever is more frequent).

D. A Prep blank, LCS, Duplicate, and Digested Spike must be run for every SDG or every 20 samples within an SDG (soil for soil samples, water for water samples, or both for both matrices).

E. The coefficient variation must be < 20%

F. % Recoveries or limits:

ICV	± 10%
CCV	± 10%
ICB	Less than the lowest standard
CCB	Less than the lowest standard
PB	Less than the lowest standard
PBA	± 15%
LCSW	± 20%
LCSWA	>40%
LCSS	between 311.5 ppb and 890 ppb (ERA 220)
LCSSA	>40%
SAMPLE-A	± 15%

1. If the ICV fails, the adjustments must be made and the instrument recalibrated.

2. If a CCV fails, the run must be stopped, the instrument recalibrated and the preceding 10 samples must be rerun.

3. If the ICB fails, autozero the instrument, recalibrate and run again. If it still fails, check for contaminants in the furnace water or the matrix modifier.

4. If a CCB fails, stop the run, autozero and recalibrate. The preceding 10 samples must be rerun.

5. If a prep blank fails, rerun once. If it still fails, the samples are contaminated and must be redigested.

6. If PBA fails, the spiking solution must be remade and the PB and PBA must be rerun. If it still fails, there are interferences and the samples must be redigested.

7. If an LCS fails, rerun once. If it still fails, the samples must be redigested.

8. If an LCSA fails, rerun the LCS and LCSA once. If it still fails, there are interferences and the samples must be redigested.

9. If an analytical spike of a sample is between 40% and 85%, an MSA is required. Exception: if the spiked result is > 3 X the value of the sample.

MSA preparation: Using the sample result, spike the sample at 50%, 100%, and 150% of that value using standard solution 1000 ppb. Only a single injection is required. If the Correlation is below 0.995, rerun once. Report the value with the best correlation.

10. If the analytical spike of a sample is < 40%, dilute and rerun.

VII. Safety

A. Equipment

1. Lab coat

2. Safety glasses

3. Plastic gloves

B. Potential hazards

1. UV light source is hazardous to the eyes if looked at directly.

2. The furnace temperature is very high. Wait a minute before checking tube in furnace after operating.

3. Fumes emitted from the furnace are potentially hazardous. A ventilation system provided over each furnace to remove these fumes.

VIII. Disposal Requirements

A. The samples are held for three months in a storage room.

B. The samples are neutralized and washed down the drain according to SOP 9.1, Hazardous Waste Disposal.

IX. Reporting Requirements

A. 1. The raw data must be recorded in ink and must contain on the first page:

a. Analyst's initials

b. Date

c. Element analyzed

d. Standard source and lot #

e. ICV source

f. Work Order

2. Each sample must be identified in the raw data by the appropriate name designated by the client.

3. Each sample must have an analysis time associated with it in the raw data.

4. MSA analysis must be accompanied by the correlation, calculated value, slope, and intercept in the raw data.

5. The following information must be recorded in the Graphite Furnace Run Log (Figure 5): date, element, highest standard, units of highest standard, lamp energy, time, absorbance, analyst's name, work order #, and fractions run.

6. The following information must be recorded on the Selenium Bench Sheet (Figure 4): instrument ID, date of analysis, analyst's name and signature, review date, reviewer's signature, work order number, time analysis initiated.

7. All maintenance, both routine and unexpected, shall be recorded on a Maintenance Log sheet (Figure 6) which is kept in the "Maintenance Log" Book for each instrument.

Figure 1

Furnace Program - main page

PROGRAMMING MODE INSTRUMENT USER METHOD # 3 - SE DATE: _____

ELEMENT: SE WAVELENGTH (NM): 196.0 SLIT (NM): 0.7
PYRO COATED TUBE WITH PLATFORM - MAX POWER HEATING - GAS STOP - MATRIX MOD.
PRETREAT TEMP: 900 ATOMIZE TEMP: 2100 CHARACT.MASS (PG) 30.0

1.	TECHNIQUE: ZEEMAN	2.	LAMP CURRENT (MA): 0	<< USE EDL
2.	SIGNAL PROCESSING: PEAK AREA	3.	CALIBRATION: LINEAR	
4.	TIME (SECONDS): 5.0	5.	READ DELAY (SECONDS): 0.0	
7.	SCREEN FORMAT: 0.7 GRAPHICS	8.	PRINTER: OFF	<< MUST BE OFF
9.	RECORDER SIGNAL: 0.2 CONT ABS	10.	RECORDER EXP: 1000	
11.	STATISTICS: 2 AVG. & SD & CV	12.	NOMINAL WEIGHT 1.0	
13.	ROLLOVER(ABS): 1.5	14.	BG SCALE: 0.7	

15. S1: <<LEAVE ALL ENTRIES FOR STANDARD EMPTY

Figure 1

Furnace Program - main page

PROGRAMMING MODE INSTRUMENT USER METHOD # 3 - SE DATE: _____

ELEMENT: SE WAVELENGTH (NM): 196.0 SLIT (NM): 0.7
PYRO COATED TUBE WITH PLATFORM - MAX POWER HEATING - GAS STOP - MATRIX MOD.
PRETREAT TEMP: 900 ATOMIZE TEMP: 2100 CHARACT.MASS (PG) 30.0

1.	TECHNIQUE: ZEEMAN	2.	LAMP CURRENT (MA): 0	<< USE EDL
2.	SIGNAL PROCESSING: PEAK AREA	3.	CALIBRATION: LINEAR	
4.	TIME (SECONDS): 5.0	5.	READ DELAY (SECONDS): 0.0	
7.	SCREEN FORMAT: 0.7 GRAPHICS	8.	PRINTER: OFF	<< MUST BE OFF
9.	RECORDER SIGNAL: 0.2 CONT ABS	10.	RECORDER EXP: 1000	
11.	STATISTICS: 2 AVG. & SD & CV	12.	NOMINAL WEIGHT 1.0	
13.	ROLLOVER(ABS): 1.5	14.	BG SCALE: 0.7	

15. S1: <<LEAVE ALL ENTRIES FOR STANDARD EMPTY

Figure 2

Furnace Program - heating times and temperatures

PROGRAMMING MODE INSTRUMENT USER METHOD # 3 - SE DATE: _____

ELEMENT: SE WAVELENGTH (NM): 196.0 SLIT (NM): 0.7
PYRO COATED TUBE WITH PLATFORM - MAX POWER HEATING - GAS STOP - MATRIX MOD.
PRETREAT TEMP: 900 ATOMIZE TEMP: 2100 CHARACT.MASS (PG) 30.0

STEP NUMBER	FURNACE TEMPERATURE	TIME RAMP	TIME HOLD	INTERNAL GASFLOW	READ	RECORDER
1	120	1	10	300	-	-
2	180	5	5	300	-	-
3	900	1	10	300	-	-
4	20	1	5	0	-	-
5	2100	0	5	0	*	-
6	2700	1	3	300	-	-

Figure 3

Furnace Program - Autosampler controls

PROGRAMMING MODE AUTOSAMPLER USER METHOD # 3 - SE DATE: _____

SOLUTIONS	LOCATION	VOLUME	BLANK VOLUME
BLANK	--	--	20
STANDARD 1	--	--	—
STANDARD 2	--	--	—
STANDARD 3	--	--	—
STANDARD 4	--	--	—
STANDARD 5	--	--	—
STANDARD 6	--	--	—
STANDARD 7	--	--	—
STANDARD 8	--	--	—
RESLOPE	--	--	—
MATRIX MODIFER 1	--	--	—
MATRIX MODIFER 2	--	--	—
SAMPLE 01 TO 40 WITH MODIFER - - -		20	—
SAMPLE -- TO -- WITH MODIFER - - -		--	—

RECAL LOCATIONS: -- : -- : -- : -- NUMBER OF INJECTIONS: 01

NOTE: Add 20 uL 5% nickel nitrate modifer to 1.0 ml of standards and samples prior to loading onto autosampler.

Figure 4

95-06-132
95-06-133
95-06-148
95-06-149
95-06-179
95-06-220

Page 1

BENCH SHEET
SELENIUM

DATA FILE: SE71095A
INSTRUMENT FILE: SE71095A

CASE:
INSTRUMENT: 3209

SDG: PU 7 10
ANALYZED: 07/10/95

SEQ	LAB ID	CLIENT ID	MATRIX	DILUTION	SIZE	VOLUME	%SOLIDS	ANALYZED	
1	0.00 ug/L	S0	WATER	1.00	100.000	100.000	100.00	07/10/95	11:15
2	5.00 ug/L	S5	WATER	1.00	100.000	100.000	100.00	07/10/95	11:18
3	30.0 ug/L	S30	WATER	1.00	100.000	100.000	100.00	07/10/95	11:21
4	100 ug/L	S100	WATER	1.00	100.000	100.000	100.00	07/10/95	11:24
5	ICV	ICV	WATER	1.00	100.000	100.000	100.00	07/10/95	11:27
6	ICB	ICB	WATER	1.00	100.000	100.000	100.00	07/10/95	11:30
7	CRA	CRA	WATER	1.00	100.000	100.000	100.00	07/10/95	11:33
8	PBW 07-07-95	PBW 07-07-95	WATER	1.00	100.000	100.000	100.00	07/10/95	11:36
9	PBW 07-07-95A	PBW 07-07-95A	WATER	1.00	100.000	100.000	100.00	07/10/95	11:39
10	PBS 07-07-95	PBS 07-07-95	SOIL	1.00	1.000	100.000	100.00	07/10/95	11:42
11	PBS 07-07-95A	PBS 07-07-95A	SOIL	1.00	1.000	100.000	100.00	07/10/95	11:45
12	LCSW	LCSW	WATER	1.00	100.000	100.000	100.00	07/10/95	11:48
13	LCSWA	LCSWA	WATER	1.00	100.000	100.000	100.00	07/10/95	11:51
14	LCSS	LCSS	SOIL	50.00	1.000	100.000	100.00	07/10/95	11:54
15	LCSSA	LCSSA	SOIL	50.00	1.000	100.000	100.00	07/10/95	11:57
16	CCV1	CCV1	WATER	1.00	100.000	100.000	100.00	07/10/95	12:00
17	CCB1	CCB1	WATER	1.00	100.000	100.000	100.00	07/10/95	12:03
18	9506132-02E	E36-SW24-00-126	WATER	1.00	100.000	100.000	100.00	07/10/95	12:06
19	9506132-02EA	E36-SW24-00-126A	WATER	1.00	100.000	100.000	100.00	07/10/95	12:09
20	9506132-02ED	E36-SW24-00-126D	WATER	1.00	100.000	100.000	100.00	07/10/95	12:12
21	9506132-02EDA	E36-SW24-00-126DA	WATER	1.00	100.000	100.000	100.00	07/10/95	12:15
22	9506132-02ES	E36-SW24-00-126S	WATER	1.00	100.000	100.000	100.00	07/10/95	12:18
23	9506132-04E	E36-SW24-00-129	WATER	1.00	100.000	100.000	100.00	07/10/95	12:21
24	9506132-04EA	E36-SW24-00-129A	WATER	1.00	100.000	100.000	100.00	07/10/95	12:24
25	9506132-06E	E36-SW26A-00-133	WATER	1.00	100.000	100.000	100.00	07/10/95	12:27
26	9506132-06EA	E36-SW26A-00-133A	WATER	1.00	100.000	100.000	100.00	07/10/95	12:30
27	CCV2	CCV2	WATER	1.00	100.000	100.000	100.00	07/10/95	12:33
28	CCB2	CCB2	WATER	1.00	100.000	100.000	100.00	07/10/95	12:36
29	9506133-01E	E36-SD24-01-128	SOIL	1.00	1.000	100.000	51.20	07/10/95	12:39
30	9506133-01EA	E36-SD24-01-128A	SOIL	1.00	1.000	100.000	51.20	07/10/95	12:42
31	9506133-02E	E36-SS24-01-131	SOIL	1.00	1.000	100.000	70.10	07/10/95	12:45
32	9506133-02EA	E36-SS24-01-131A	SOIL	1.00	1.000	100.000	70.10	07/10/95	12:48
33	9506133-03E	E36-SS19-01-139	SOIL	1.00	1.000	100.000	82.30	07/10/95	12:51
34	9506133-03EA	E36-SS19-01-139A	SOIL	1.00	1.000	100.000	82.30	07/10/95	12:54
35	9506133-04E	E36-SD24-01-132	SOIL	1.00	1.000	100.000	33.50	07/10/95	12:57
36	9506133-04EA	E36-SD24-01-132A	SOIL	1.00	1.000	100.000	33.50	07/10/95	13:00
37	9506133-05E	E36-SD26A-01-135	SOIL	1.00	1.000	100.000	80.70	07/10/95	13:03
38	9506133-05EA	E36-SD26A-01-135A	SOIL	1.00	1.000	100.000	80.70	07/10/95	13:06
39	CCV3	CCV3	WATER	1.00	100.000	100.000	100.00	07/10/95	13:09
40	CCB3	CCB3	WATER	1.00	100.000	100.000	100.00	07/10/95	13:12

E. [illegible] FU 7-10-95
Analyst / Date

[illegible] 7/12/95
Lab Supervisor / Date

Figure 5

GP ENVIRONMENTAL SERVICES FURNACE RUN LOG

INSTRUMENT ID: 3050 DOCUMENT CONTROL NUMBER:_____ PAGE NO._____

DATE_____ TIME_____ ELEMENT_____ WORK ORDER # / FRACTIONS

HIGHEST STD_____UG/L ABS_____ _____/_____

STD SOURCE_____ ICV SOURCE_____ _____/_____

DATAFILE NAME_____ LAMP ENERGY_____ _____/_____

METHOD FILE_____ FURNACE PROG ____ _____/_____

COMMENTS_____ _____/_____

_____ _____/_____

_____ _____/_____

ANALYST'S NAME_____ _____/_____

DATE_____ TIME_____ ELEMENT_____ WORK ORDER # / FRACTIONS

HIGHEST STD_____UG/L ABS_____ _____/_____

STD SOURCE_____ ICV SOURCE_____ _____/_____

DATAFILE NAME_____ LAMP ENERGY_____ _____/_____

METHOD FILE_____ FURNACE PROG ____ _____/_____

COMMENTS_____ _____/_____

_____ _____/_____

_____ _____/_____

ANALYST'S NAME_____ _____/_____

DATE_____ TIME_____ ELEMENT_____ WORK ORDER # / FRACTIONS

HIGHEST STD_____UG/L ABS_____ _____/_____

STD SOURCE_____ ICV SOURCE_____ _____/_____

DATAFILE NAME_____ LAMP ENERGY_____ _____/_____

METHOD FILE_____ FURNACE PROG ____ _____/_____

COMMENTS_____ _____/_____

_____ _____/_____

_____ _____/_____

ANALYST'S NAME_____ _____/_____

Figure 6

3-27-95 New Graphite tube installed FH.

4-3-95 New Graphite tube installed FH.

4-6-95 Computer screen shaking when instrument is not operational. Turned instrument off. Appear to arise from power source.

4-11-95 Graphite tube changed FH

4-19-95 New graphite tube installed FH

4-27-95 New Graphite tube installed FH

5-3-95 New Graphite tube installed FH

5-11-95 New Graphite tube installed FH
windows cleaned FH.

5-18-95 New Graphite tube installed FH

6-1-95 New Graphite tube installed FH

6-13-95 New graphite tube installed FH

6-27-95 New graphite tube installed FH

7-3-95 New graphite tube installed FH

Figure 7

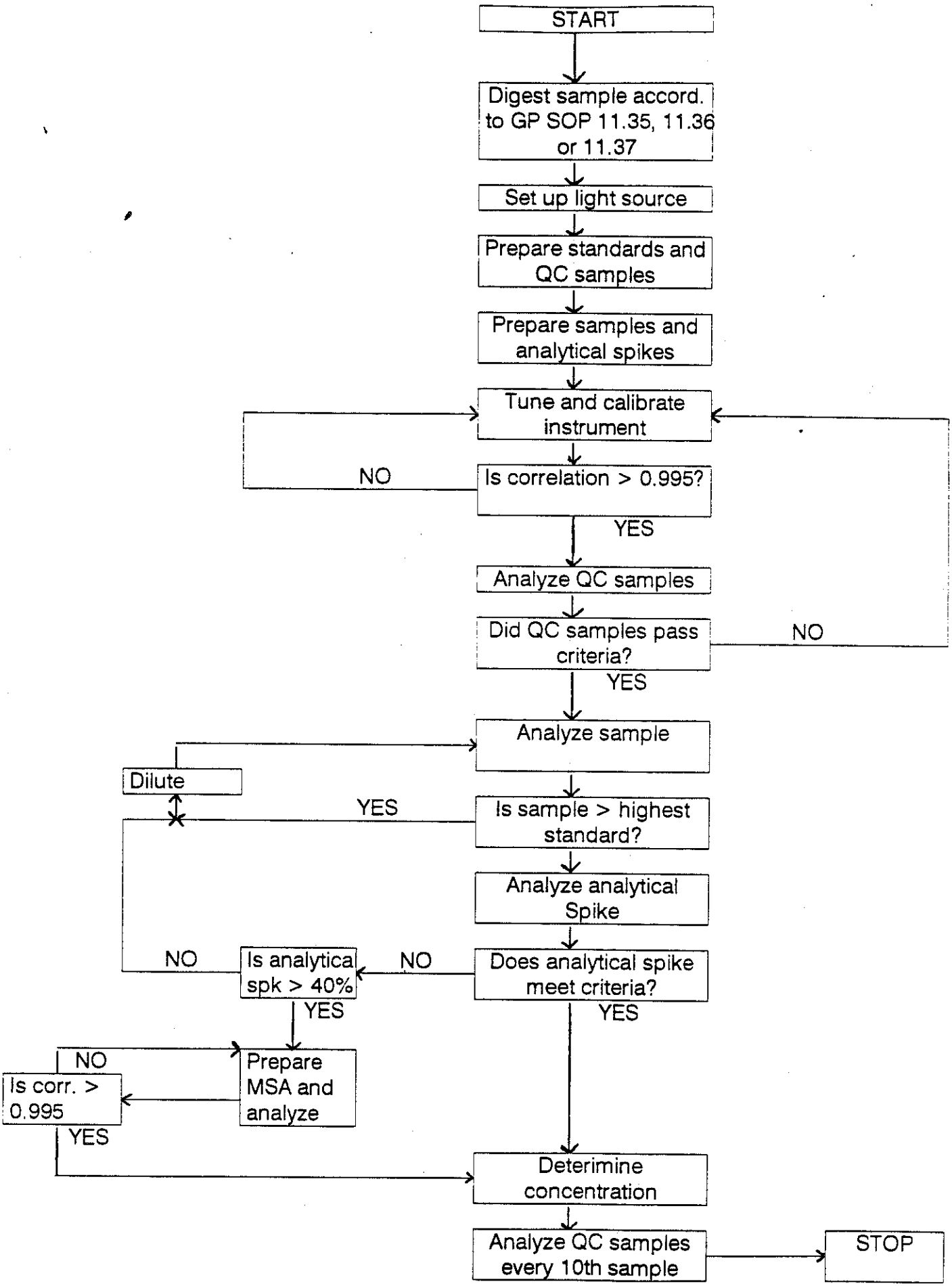
START
Digest sample accord. to GP SOP 11.35, 11.36 or 11.37
Set up light source
Prepare standards and QC samples
Prepare samples and analytical spikes
Tune and calibrate instrument
NO
Is correlation > 0.995?
YES
Analyze QC samples
Did QC samples pass criteria?
NO
YES
Analyze sample
Dilute
YES
Is sample > highest standard?
Analyze analytical Spike
NO
Is analytical spk > 40%
NO
Does analytical spike meet criteria?
YES
YES
NO
Prepare MSA and analyze
Is corr. > 0.995
YES
Deterimine concentration
Analyze QC samples every 10th sample
STOP

Effective Date: July 1995
Version Number: 1
Initiated By :
Approved By :

SOP No.: 11.43

Title : Graphite Furnace Analysis for Silver.

Scope : The method detailed in this procedure is for the analysis of water, soil, sediment, sludge and other solid wastes digestates for silver by graphite furnace atomic absorption spectroscopy in accordance with SW 846 method 7761

I. PURPOSE

The quantification of Silver by graphite furnace. All samples are digested in accordance with SOP 11.35 and SOP 11.37 prior to analysis. The holding time is 180 days.

II. REFERENCES

SW 846 method 7761

III. EQUIPMENT AND SUPPLIES

- Eppendorf pipetters and pipette tips
  - 1000 µl
  - 100 µl
  - 20 µl
  - 10 µl
- 5 or 10 ml disposable polystyrene beakers
- 2 ml autoanalysis disposable sample cups
- Perkin Elmer Graphite Furnace (Zeeman 3030)
- Autosampler (AS 60/70)
- Perkin Elmer or equivalent pyrocoated graphite tubes and platforms
- Light Source (Electrodeless Discharge Lamp (EDL) or Hollow Cathode Lamp (HCL))

- Argon gas (cryogenic liquid source)
- EDL Power supply (for an EDL lamp)
- * Data acquisition software (MULTI-PRO)

IV. REAGENTS

- 1000 ppm certified Ag standard.
- Deionized H_2O ASTM Type II or equivalent.
- Furnace Water - Deionized water with 1.25% Nitric acid and 0.18% Hydrogen Peroxide

  Add 125 mls of concentrated Nitric acid and 60 mls H_2O_2 (30%) to 10 liters of deionized H_2O.
- ICV, CCV and LCS Standards (supplied by HIGH PURITY STANDARDS and ENVIRONMENTAL RESOURCE ASSOCIATES.)

V. PROCEDURE (See Figure 7 for flow chart)

A. Standard Preparation

1. Prepare a blank with furnace H_2O

2. Prepare Stock Solution 1 (10 ppm) from the 1000 ppm Standard Solution: pipet 1.0 mL of 1000 ppm standard into a 100 mL class A volumetric flask, bring up to line with furnace water, stopper flask and invert several times to mix.

$$\text{Stock 1} = \frac{(1.000\ \text{ml})(1000\ \text{ppm})}{100\ \text{ml Furnace } H_2O} = 10\ \text{ppm or } 10000\ \text{ppb}$$

Prepare Stock Solution 2 (1000 ppb) from the 10 ppm Stock Solution 1: pipet 10.00 ml using class A volumtric pipet into a 100 mL class A volumetic flask and bring to line with furnace water.

$$\text{Stock 2} = \frac{(10.00\ \text{ml})(10\ \text{ppm})}{100\ \text{ml Furnace } H_2O} = 1000\ \text{ppb}$$

Next, prepare Standards 1 (10 ppb), 2 (20 ppb), 3 (50 ppb), as follows:

$$\text{Std. 1} = \frac{(.01\ \text{ml})(1000\ \text{ppb})}{1\ \text{ml Furnace } H_2O} = 10\ \text{ppb}$$

$$\text{Std. 2} = \frac{(.02\ \text{ml})(1000\ \text{ppb})}{1\ \text{ml Furnace } H_2O} = 20\ \text{ppb}$$

$$\text{Std. 3} = \frac{(.05\ \text{ml})(1000\ \text{ppb})}{1\ \text{ml Furnace } H_2O} = 50\ \text{ppb}$$

3. 1000 ppb will be used as the analytical spiking solution. For analytical spikes, pipet 0.020ml of 1000 ppb to 1.0 ml of sample.

4. Label four sample cups: 10 ppb, 20 ppb, 50 ppb, and Blank. Add 1 ml of each concentration of standard to its respective cup and 1 ml of furnace water to the fourth for the blank. Add an additional 20 uL of DI water to each cup to compensate for the analytical spikes.

5. Prepare standards daily.

B. QC Preparation

1. Using ICVC, prepare the ICV and CCV's as follows: pipet 1.0 ml of ICV into a 100 mL class A volumetric flask and bring up to volume with furnace water, stopper and invert several times to mix.

$$\frac{(1000\ \mu l\ \text{of ICVC})}{100\ \text{ml}} = \text{a final concentration of } 20.0\ \text{ppb}$$

*certified concentration of undiluted ICVC = 2000 ppb

2. ICB and CCB preparation is the same as the preparation for the blank standard.

3. A CCV (ICV) and a CCB (ICB) must be run for every ten samples analyzed, and at the beginning and end of the run.

C. Sample Preparation

1. Treat preparation blanks (PB), laboratory control samples (LCS), digested spikes, and duplicates as samples.

2. The LCS soil needs a 1:10 dilution before analyzing. Refer to the certificate of analysis for the ture value to determing what dilution it will require.

3. The LCS water (LCSW = ICVC) needs no dilution. The final concentration of LCSW = 20.0.

4. To sample cups add one ml of sample and label it with a marker.

5. Analytical Spike Preparation

A 20 ppb analytical spike is required of all samples, prep. blanks, LCS's, and duplicates. It is not required on a digested spike.

Prepare an analytical spike (using 1000 ppb spiking solution prepared with the standards) in a sample cup as follows: pipet 20 uL of 1000 ppb standard to the cup, pipet 20 uL of DI water to another cup, tranfer 1.0 mL of sample to each cup.

$$\frac{(20\ \mu l \text{ of } 1000 \text{ ppb})}{1 \text{ ml}} = 20 \text{ ppb}$$

NOTE: the final volume is really 1020 uL, but the additional 20 uL has been corrected by adding 20 uL to the standards, ICV's and CCV's as well.

6. Prepare a Silver bench sheet (Figure 4) in the following sequence in the multipro.

a) ICV
b) ICB
c) CRA (the lowest standard in the calibration line)
d) PB (either water, soil or both; see QC rules)
e) PBA
f) LCS (either water, soil or both)
g) LCSA
h) CCV1
i) CCB1
j) sample
k) SampleA
l) SampleD (duplicate)
m) SampleDA
n) SampleS (digested spike)
o) CCV2
p) CCB2

The "A" following the sample indicates the analytical spike. It may be necessary to run a CCV and CCB before 10 samples have been run to avoid splitting up an analytical spike and its sample.

The Benchsheet is created directly in the computer which utilizes the Multipro software program.
This program is able to acquire data directly from the instrument.
To use this program, turn the computer on.
MENU will appear on the screen with the following submenu:

1. ANALYST'S NOTEBOOK

2. NETWORK

3. EMERGENCY LOCAL ANALYST NOTEBOOK OPERATION

Type 1 and the password.
Select the printer to which you want your work directed to.

The Multipro screen will then appear with the menu:

"System, Analysis, Methods, Data Entry, Export Data, Reports".

Go to method and load. Press "Enter", and type AG.

Go to "Analysis" select "Add New Run".

Then name your runfile, your initial, date of the run and run number. Press "Enter."

Go to "Incomplete backlog". Here you are automatically loading workorder(s) that you want to run. You can load by department or by testcode.
To load by department, type "INGF", or type "272_2" or "7761" whichever is applicable if you are loading by test code.
The list of workorders will then appear, Press "Enter" on any workorder you choose. Press "F10" when you finish your selection to load the selected workorder(s). Enter "Y" for default of analytical spike "AS."

Go to "Data Entry" and hit "Enter".

Select "Modify data".
Go to Edit Sequence. All the loaded workorder should be here. Modify your benchsheet to reflect what it should look like. Insert the approriate quality controls where they should be by using the insert key.
The quality control requirements must be met.
Please refer to the quality control section of this procedure.
When this is completed then go to "Acquire Data."
Press "Enter" and again press "F10" to commit.
In the default mode type "LR" (Linear Regression).
Enter the number of replicates.
Enter "Y" to to record time of runs.
Then press "F10" one more time to start acquiring your data.

Note: The "PRINT" key on the instrument must be on for the multipro to acquire data.

D. Tuning and Calibration of Instrument

1. Turn on the furnace in the following sequence:

a. cooling water on

b. furnace power on

c. computer screen on

d. Multi-pro loaded with method file and set to acquisition mode.

2. Make sure there is enough deionized water in the white plastic water bottle located under the autosampler.

3. Check the graphite tube to see if it is still usable. (Press the "furnace" button to open the furnace where the tube is.) If it is overly charred or bent, replace the tube and platform. Make sure the injection hole is lined up correctly.

4. Attach the light source (EDL or HCL).

   a. For EDL:

      1) Attach to cable running to EDL power supply.
      2) Turn on power supply.
      3) Start the UV light with the "UV starter".
      4) Turn the power supply to 8 watts.

   b. For HCL:
      1) Plug into GFA
      2) Set to 10 amps on program page. (later)

5. Press "user index" control key to find user index page.

6. Select the method # that corresponds to Silver by entering in the number and pressing "recall" control key. A method that has already been set up will appear (Figure 1).

7. Set the wavelength at 328.1. Set the slit width at 0.7 nm.

8. Press the "set up" control key for the "SET UP MODE INSTRUMENT" page. Adjust the lamp by turning the metal knobs by the lamp to gain the maximum energy. Press the "gain" key to rescale and increase energy. The energy should be approximately 50. The lamp will need some time to warm up (15-30 min.).

9. Go to the "PROGRAM INSTRUMENT MODE" page by pressing the "prog" key. Advance or backup through this page by using the keys at the bottom. This page should appear as shown in Figure 1. If using a hollow cathode lamp, set the amps at 10 or whatever is required by the lamp manufacturer.

10. Press the "prog" button again for the "PROGRAM MODE HGA 600" page. Use the keys on the bottom to move around the screen.

The first two steps are the drying temperatures; the second two are the pretreat temps.; the third is the atomization temp.; and the last is the burn off temperature. The ramp time is the time the furnace takes to reach the corresponding temperature and the hold time is how long that temperature is held before the next step. The set up on this page should be as described in Figure 2.

11. Press the "prog" button again to go to the "PROGRAMMING MODE AUTOSAMPLER" page. Use the keys at the bottom to move around the screen. Enter the location of which your standards (1-4) and samples (starting at location 5) are in the autosampler. Enter in the injection volume specified for the standards and samples (See Figure 3). Now you are ready to begin the analysis.

E. Sample Analysis

1. Press the "run" button and a screen with a blank graph will appear.

2. If a "check" key at the bottom of the page appears, press this first. This will tell you if there is anything wrong with the program set up.

3. Now press the "sampler reset" key at the bottom of the screen. This resets the autosampler.

4. Now press the "sampler on/off" key at the bottom of the screen. This starts and stops the autosampler.

5. Make sure the printer is on line and press the print key to send the result to Multipro.

6. When the last standard is running, press the "autosampler on/off" key again to stop after the last standard. Check the calibration. The correlation must be at least .995 or better.

7. Record the absorbance of the highest standard in the <u>Graphite Furnace Run Log</u> (Figure 5), located at each furnace instrument.

8. Enter in the number of the first sample in the autosampler, a period and then the number of the last sample (ex. 1.32). This will tell the autosampler where to stop. Now press the "autosampler on/off" key again to start the analysis of the samples.

9. A "run finished" will appear on the screen when the run is completed.

10. Fill out the Graphite Furnace Run Log (Figure 5) for samples or cases run that day.

Other key functions:

11. "Cont" enables you to see a bar graph of the relative signal. Also, by using the keys at the bottom of the screen, the instrument can be autozeroed, the injector can be flushed with

    DI water, and the injector can be moved into and out of the DI water.

12. "Display Graph" displays the graph of the sample that was run last.

13. "Display Calib." displays the calibration curve.

14. "Display Suppl" displays the absorbances and the results.

15. "New keys" allows you to start the calibration from the middle if one of the calibration points was off.

16. "Store" stores the method in the user index.

17. "Print Screen" prints the screen displayed.

18. "Print" prints the results.

The keys at the bottom of the display screens:

19. "HGA on/off" turns the furnace on or off.

20. "Manual temp." turns the furnace temp. on until you press it again.

21. "Skip Step" skips the current step and progresses to the next one.

22. "Manual Position" tell the autosampler to run the specific sample entered.

F. Trouble Shooting and Corrective Action

1. The calibration curve is below .995.

    a. The standards may need to be remade.

    b. The temperatures or times may need to be adjusted.

2. The values are all coming out very low or zero.

   a. Make sure the autosampler is injecting into the graphite tube.

3. The values are low.

   a. The tube may need changing.

4. "High tube impedence" error message appears.

   a. The tube needs changing.

5. "The instrument cannot set gain (no energy)" error message appears.

   a. Check the wavelength

   b. Check to see if the power supply is on.

   c. Make sure nothing is blocking the light source.

   d. Check to see if the correct lamp is connected.

6. ICV fails

   a. Check absorbances of standards for possibility of incorrect dilution.

   b. Remake ICV and if it still fails, recalibrate and try again.

7. High negative values.

   a. There is a high matrix interference and the sample needs to be diluted.

G. Calculations

1. % Recovery for ICV, CCV's, LCS

$$\frac{\text{Obtained value}}{\text{True Value}} \times 100$$

2. % Recovery for spikes and analytical spikes.

$$\frac{\text{Spike value} - \text{Sample value}}{\text{Spiked conc.}} \times 100$$

3. If the value is below the IDL, a zero is used for calculations.

VI. QUALITY CONTROL

A. The instrument must be calibrated every time a new run is started or every 24 hours.

B. After a new calibration, the run must begin with an ICV followed by an ICB and a CRA.

C. QC's and blanks must be run every ten samples or every two hours (whichever is more frequent).

D. A Prep blank, LCS, Duplicate, and Digested Spike must be run for every SDG or every 20 samples within an SDG (soil for soil samples, water for water samples, or both for both matrices).

E. The coefficient variation must be < 20%

F. % Recoveries or limits:

ICV	± 10%
CCV	± 10%
ICB	Less than the lowest standard
CCB	Less than the lowest standard
PB	Less than the lowest standard
PBA	± 15%
LCSW	± 20%
LCSWA	>40%
LCSS	between 108 ppb and 397 ppb (ERA 220 4/94)
LCSSA	>40%
SAMPLE-A	± 15%

1. If the ICV fails, the adjustments must be made and the instrument recalibrated.

2. If a CCV fails, the run must be stopped, the instrument recalibrated and the preceding 10 samples must be rerun.

3. If the ICB fails, autozero the instrument, recalibrate and run again. If it still fails, check for contaminants in the furnace water or the matrix modifier.

4. If a CCB fails, stop the run, autozero and recalibrate. The preceding 10 samples must be rerun.

5. If a prep blank fails, rerun once. If it still fails, the samples are contaminated and must be redigested.

6. If PBA fails, the spiking solution must be remade and the PB and PBA must be rerun. If it still fails, recalibrate the instrument and rerun. The PBA must pass +/- 15%.

7. If an LCS fails, rerun once. If it still fails, the samples must be redigested.

8. If an LCSA fails, rerun the LCS and LCSA once. If it still fails, note this on the runlog and continue with analysis.

9. If an analytical spike of a sample is between 40% and 85%, an MSA is required.

   MSA preparation: Using the sample result, spike the sample at 50%, 100% and 150% of that value using the standard solution 1000 ppb. Only a single injection is required. If the correlation is below 0.995, rerun once. Report the value with the best correlation.

10. If the analytical spike of a sample is < 40%, dilute and rerun.

VII. SAFETY

A. Equipment

1. Lab coat

2. Safety glasses

3. Plastic gloves

B. Potential hazards

1. UV light source is hazardous to the eyes if looked at directly.

2. The furnace temperature is very high. Wait a minute before checking tube in furnace after operating.

3. Fumes emitted from the furnace are potentially hazardous. A ventilation system provided over each furnace to remove these fumes.

VIII. DISPOSAL REQUIREMENTS

A. The samples are held for three months in a storage room.

B. The samples are neutralized and washed down the drain according to SOP 9.1, Hazardous Waste Disposal.

IX. REPORTING REQUIREMENTS

A. 1. The raw data must be recorded in ink and must contain on the first page:

a. Analyst's initials

b. Date

c. Element analyzed

d. Standard source and lot #

e. ICV source

f. Work order

2. Each sample must be identified in the raw data by the appropriate name designated by the client.

3. Each sample must have an analysis time associated with it in the raw data.

4. MSA analysis must be accompanied by the correlation, calculated value, slope, and intercept in the raw data.

5. The following information must be recorded in the Graphite Furnace Run Log (Figure 5): date, element, highest standard, units of highest standard, lamp energy, time, absorbance, analyst's name, work order #, and fractions run.

6. The following information must be recorded on the Silver Bench Sheet (Figure 4): instrument ID, date of analysis, analyst's name and signature, review date, reviewer's signature, work order number, time analysis initiated.

7. All maintenance, both routine and unexpected, shall be recorded on a Maintenance Log sheet (Figure 6) which is kept in the "Maintenance Log" Book for each instrument.

Figure 1
Furnace Program - main page

Furnace Program - main page

PROGRAMMING MODE INSTRUMENT USER METHOD # 12 - ~~PB~~ AG DATE: _____

ELEMENT: AG WAVELENGTH (NM): 328.1 SLIT (NM): 0.7
PYRO COATED TUBE WITH PLATFORM - MAX POWER HEATING - GAS STOP - MATRIX MOD.
PRETREAT TEMP: 650 ATOMIZE TEMP: 1600 CHARACT.MASS (PG) 1.4

1.	TECHNIQUE: ZEEMAN	2.	LAMP CURRENT (MA): 0	<< USE EDL
2.	SIGNAL PROCESSING: PEAK AREA	3.	CALIBRATION: LINEAR	
4.	TIME (SECONDS): 5.0	5.	READ DELAY (SECONDS): 0.0	
7.	SCREEN FORMAT: 1.8 GRAPHICS	8.	PRINTER: OFF	<< MUST BE OFF
9.	RECORDER SIGNAL: 0.2 CONT ABS	10.	RECORDER EXP: 1000	
11.	STATISTICS: 2 AVG. & SD & CV	12.	NOMINAL WEIGHT 1.0	
13.	ROLLOVER(ABS): 1.8	14.	BG SCALE: 1.8	

15. S1: <<LEAVE ALL ENTRIES FOR STANDARD EMPTY

Figure 2
Furnace Program - heating times and temperatures

Furnace Program - heating times and temperatures

PROGRAMMING MODE INSTRUMENT USER METHOD # 12 - AG DATE: _____

ELEMENT: AG WAVELENGTH (NM): 328.1 SLIT (NM): 0.7
PYRO COATED TUBE WITH PLATFORM - MAX POWER HEATING - GAS STOP - MATRIX MOD.
PRETREAT TEMP: 650 ATOMIZE TEMP: 1600 CHARACT.MASS (PG) 1.4

STEP NUMBER	FURNACE TEMPERATURE	TIME RAMP	TIME HOLD	INTERNAL GASFLOW	READ	RECORDER
1	120	1	10	300	-	-
2	220	5	5	300	-	-
3	650	1	10	300	-	-
4	20	1	5	0	-	-
5	1600	0	5	0	*	-
6	2400	1	4	300	-	-

Figure 3
Furnace Program - Autosampler controls

Furnace Program - Autosampler controls

PROGRAMMING MODE AUTOSAMPLER USER METHOD # 12 - AG DATE: _____

SOLUTIONS	LOCATION	VOLUME	BLANK VOLUME
BLANK	--	--	10
STANDARD 1	--	--	__
STANDARD 2	--	--	__
STANDARD 3	--	--	__
STANDARD 4	--	--	__
STANDARD 5	--	--	__
STANDARD 6	--	--	__
STANDARD 7	--	--	__
STANDARD 8	--	--	__
RESLOPE	--	--	__
MATRIX MODIFER 1	--	--	__
MATRIX MODIFER 2	--	--	__
SAMPLE 01 TO 40 WITH MODIFER - - -		10	__
SAMPLE -- TO -- WITH MODIFER - - -		--	__

RECAL LOCATIONS: -- : -- : -- : -- NUMBER OF INJECTIONS: 01

NOTE: Add 20 uL 10% ammoniumphosphate (NH4H2PO4) modifer to 1.0 ml of standards and samples prior to loading onto autosampler.

Figure 4
Bench sheet

95-06-155
95-06-145
95-06-149
95-06-179
95-06-220
FU 7-10

Page 1

BENCH SHEET
SILVER

DATA FILE: AG71095A
INSTRUMENT FILE: AG71095A

CASE:
INSTRUMENT: 3050

SDG:
ANALYZED: 07/10/95

SEQ	LAB ID	CLIENT ID	MATRIX	DILUTION	SIZE	VOLUME	%SOLIDS	ANALYZED	
1	0.00 ug/L	S0	WATER	1.00	100.000	100.000	100.00	07/10/95	11:02
2	10.0 ug/L	S10	WATER	1.00	100.000	100.000	100.00	07/10/95	11:05
3	20.0 ug/L	S20	WATER	1.00	100.000	100.000	100.00	07/10/95	11:08
4	50.0 ug/L	S50	WATER	1.00	100.000	100.000	100.00	07/10/95	11:11
5	ICV	ICV	WATER	1.00	100.000	100.000	100.00	07/10/95	11:14
6	ICB	ICB	WATER	1.00	100.000	100.000	100.00	07/10/95	11:17
7	CRA	CRA	WATER	1.00	100.000	100.000	100.00	07/10/95	11:20
8	PBW 07-07-95	PBW 07-07-95	WATER	1.00	100.000	100.000	100.00	07/10/95	11:23
9	PBW 07-07-95A	PBW 07-07-95A	WATER	1.00	100.000	100.000	100.00	07/10/95	11:26
10	PBS 07-07-95	PBS 07-07-95	SOIL	1.00	1.000	100.000	100.00	07/10/95	11:29
11	PBS 07-07-95A	PBS 07-07-95A	SOIL	1.00	1.000	100.000	100.00	07/10/95	11:32
12	LCSW	LCSW	WATER	1.00	100.000	100.000	100.00	07/10/95	11:35
13	LCSWA	LCSWA	WATER	1.00	100.000	100.000	100.00	07/10/95	11:38
14	LCSS	LCSS	SOIL	50.00	1.000	100.000	100.00	07/10/95	11:41
15	LCSSA	LCSSA	SOIL	50.00	1.000	100.000	100.00	07/10/95	11:44
16	CCV1	CCV1	WATER	1.00	100.000	100.000	100.00	07/10/95	11:47
17	CCB1	CCB1	WATER	1.00	100.000	100.000	100.00	07/10/95	11:50
18	9506132-02E	E36-SW24-00-126	WATER	1.00	100.000	100.000	100.00	07/10/95	11:53
19	9506132-02EA	E36-SW24-00-126A	WATER	1.00	100.000	100.000	100.00	07/10/95	11:56
20	9506132-02ED	E36-SW24-00-126D	WATER	1.00	100.000	100.000	100.00	07/10/95	11:59
21	9506132-02EDA	E36-SW24-00-126DA	WATER	1.00	100.000	100.000	100.00	07/10/95	12:02
22	9506132-02ES	E36-SW24-00-126S	WATER	1.00	100.000	100.000	100.00	07/10/95	12:05
23	9506132-04E	E36-SW24-00-129	WATER	1.00	100.000	100.000	100.00	07/10/95	12:08
24	9506132-04EA	E36-SW24-00-129A	WATER	1.00	100.000	100.000	100.00	07/10/95	12:11
25	9506132-06E	E36-SW26A-00-133	WATER	1.00	100.000	100.000	100.00	07/10/95	12:14
26	9506132-06EA	E36-SW26A-00-133A	WATER	1.00	100.000	100.000	100.00	07/10/95	12:17
27	CCV2	CCV2	WATER	1.00	100.000	100.000	100.00	07/10/95	12:20
28	CCB2	CCB2	WATER	1.00	100.000	100.000	100.00	07/10/95	12:23
29	9506133-01E	E36-SD24-01-128	SOIL	1.00	1.000	100.000	51.20	07/10/95	12:26
30	9506133-01EA	E36-SD24-01-128A	SOIL	1.00	1.000	100.000	51.20	07/10/95	12:29
31	9506133-02E	E36-SS24-01-131	SOIL	1.00	1.000	100.000	70.10	07/10/95	12:32
32	9506133-02EA	E36-SS24-01-131A	SOIL	1.00	1.000	100.000	70.10	07/10/95	12:35
33	9506133-03E	E36-SS19-01-139	SOIL	1.00	1.000	100.000	82.30	07/10/95	12:38
34	9506133-03EA	E36-SS19-01-139A	SOIL	1.00	1.000	100.000	82.30	07/10/95	12:41
35	9506133-04E	E36-SD24-01-132	SOIL	1.00	1.000	100.000	33.50	07/10/95	12:44
36	9506133-04EA	E36-SD24-01-132A	SOIL	1.00	1.000	100.000	33.50	07/10/95	12:47
37	9506133-05E	E36-SD26A-01-135	SOIL	1.00	1.000	100.000	80.70	07/10/95	12:50
38	9506133-05EA	E36-SD26A-01-135A	SOIL	1.00	1.000	100.000	80.70	07/10/95	12:53
39	CCV3	CCV3	WATER	1.00	100.000	100.000	100.00	07/10/95	12:56
40	CCB3	CCB3	WATER	1.00	100.000	100.000	100.00	07/10/95	12:59

E. Wick FU 7-10-95
Analyst / Date

Jmcin 7/10/95
Lab Supervisor / Date

Figure 5
Graphite Furnace Run log

GP ENVIRONMENTAL SERVICES FURNACE RUN LOG

INSTRUMENT ID: 3050 DOCUMENT CONTROL NUMBER:_____ PAGE NO._____

DATE_____ TIME_____ ELEMENT_____ WORK ORDER # / FRACTIONS

HIGHEST STD_____UG/L ABS_____ _____/_____

STD SOURCE_____ ICV SOURCE_____ _____/_____

DATAFILE NAME_____ LAMP ENERGY_____ _____/_____

METHOD FILE_____ FURNACE PROG ____ _____/_____

COMMENTS_____ _____/_____

_____ _____/_____

_____ _____/_____

ANALYST'S NAME_____ _____/_____

DATE_____ TIME_____ ELEMENT_____ WORK ORDER # / FRACTIONS

HIGHEST STD_____UG/L ABS_____ _____/_____

STD SOURCE_____ ICV SOURCE_____ _____/_____

DATAFILE NAME_____ LAMP ENERGY_____ _____/_____

METHOD FILE_____ FURNACE PROG ____ _____/_____

COMMENTS_____ _____/_____

_____ _____/_____

_____ _____/_____

ANALYST'S NAME_____ _____/_____

DATE_____ TIME_____ ELEMENT_____ WORK ORDER # / FRACTIONS

HIGHEST STD_____UG/L ABS_____ _____/_____

STD SOURCE_____ ICV SOURCE_____ _____/_____

DATAFILE NAME_____ LAMP ENERGY_____ _____/_____

METHOD FILE_____ FURNACE PROG ____ _____/_____

COMMENTS_____ _____/_____

_____ _____/_____

_____ _____/_____

ANALYST'S NAME_____ _____/_____

Figure 6
Maintenance Log

3-27-95 New Graphite tube installed FH.

4-3-95 New Graphite tube installed FH.

4-6-95 Computer screen shaking when instrument is not operational. Turned instrument off. Appears to avoid from power source.

4-11-95 Graphite tube changed FH

4-19-95 New graphite tube installed FH

4-27-95 New Graphite tube installed FH

5-3-95 New Graphite tube installed FH

5-11-95 New Graphite tube installed FH
windows cleaned FH

5-18-95 New Graphite tube installed FH

6-1-95 New Graphite tube installed FH

6-13-95 New graphite tube installed FH

6-27-95 New graphite tube installed FH

7-3-95 New graphite tube installed FH

Figure 7

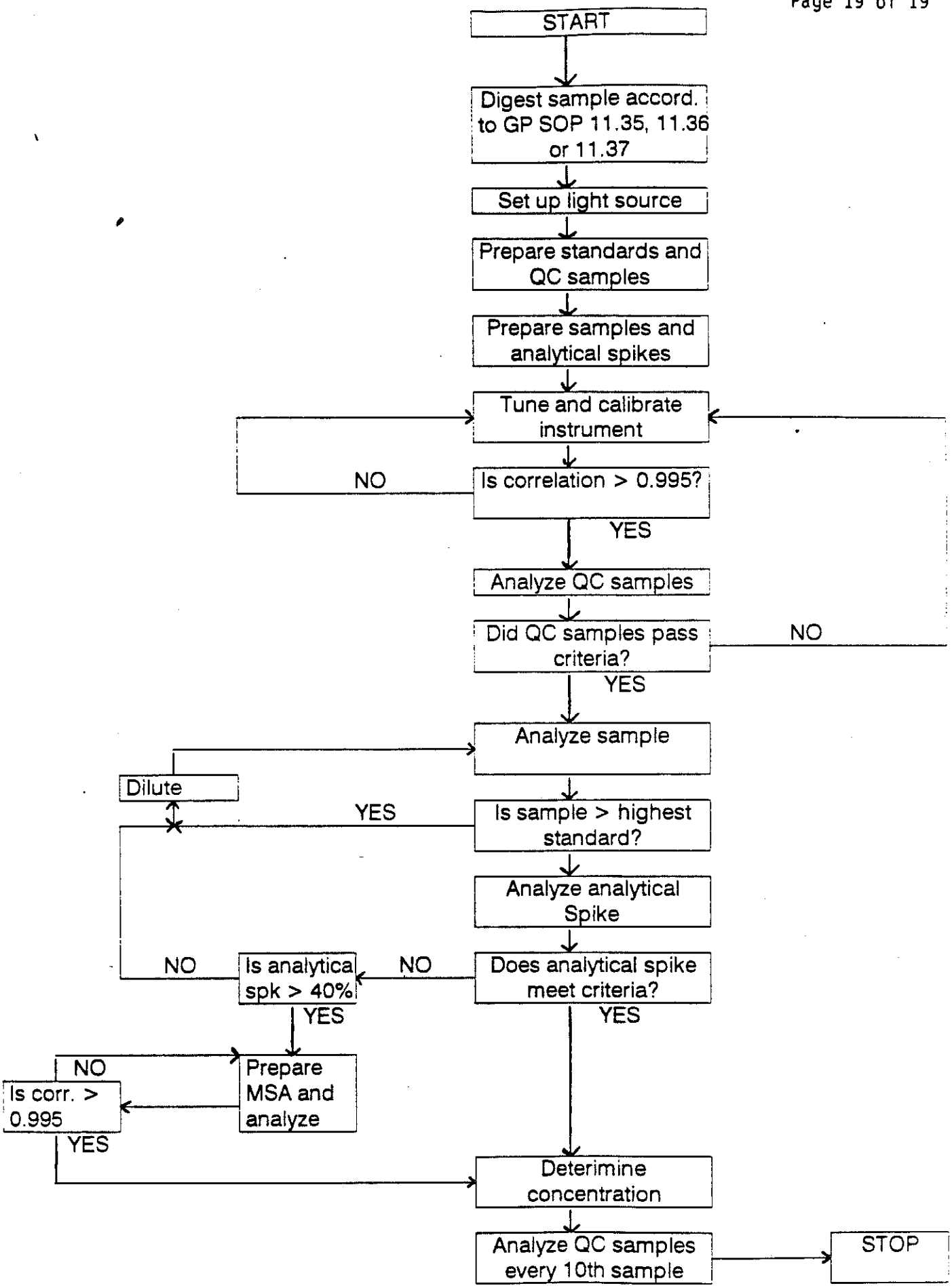
START
Digest sample accord. to GP SOP 11.35, 11.36 or 11.37
Set up light source
Prepare standards and QC samples
Prepare samples and analytical spikes
Tune and calibrate instrument
Is correlation > 0.995?
NO
YES
Analyze QC samples
Did QC samples pass criteria?
NO
YES
Analyze sample
Dilute
Is sample > highest standard?
YES
Analyze analytical Spike
Does analytical spike meet criteria?
NO
YES
Is analytica spk > 40%
NO
YES
Prepare MSA and analyze
Is corr. > 0.995
NO
YES
Deterimine concentration
Analyze QC samples every 10th sample
STOP

Effective Date: July 1995
Version Number: 1
Initiated By :
Approved By :

SOP No.: 11.44

Title : Graphite Furnace Analysis for Thallium

Scope : The method detailed in this procedure is for the analysis of water, soil, sediment, sludge and other solid waste digestates for thallium by graphite furnace atomic absorption spectroscopy in accordance with SW 846 method 7841.

I. PURPOSE

The quantification of Thallium by graphite furnace. All samples are digested in accordance with SOP 11.35 and SOP 11.37 prior to analysis. The holding time is 180 days.

II. REFERENCES

SW 846 method 7841

III. EQUIPMENT AND SUPPLIES

- Eppendorf pipetters and pipette tips
  - 1000 μl
  - 100 μl
  - 20 μl
  - 10 μl
- 5 or 10 ml disposable polystyrene beakers
- 2 ml autoanalysis disposable sample cups
- Perkin Elmer Graphite Furnace (Zeeman 3030)
- Autosampler (AS 60/70)
- Perkin Elmer or Buck Scientific pyrocoated graphite tubes and platforms
- Light Source (Electrodeless Discharge Lamp (EDL) or Hollow Cathode Lamp (HCL))

- Argon gas (cryogenic liquid source)
- EDL Power supply (for an EDL lamp)

IV. REAGENTS

- 1000 ppm certified Tl standard.

- Furnace Water - Deionized water with 1.25% Nitric acid and 0.18% Hydrogen Peroxide

  Add 125 mls of concentrated Nitric acid and 60 mls H_2O_2 (30%) to 10 liters of deionized H_2O.

- Deionized H_2O ASTM Type II or equivalent.

- ICV, CCV and LCS Standards currently supplied by High Purity Standards and Environmental Resource Associates.

V. PROCEDURE (See Figure 7 for flow chart)

A. Standard Preparation

1. Prepare a blank with furnace H_2O

2. Prepare Stock Solution 1 (10 ppm) from the 1000 ppm standard solution. Prepare Stock Solution 2 (1000 ppb) from the 10 ppm Stock Solution 1. Prepare the Stock Solution 3 (500 ppb) from the 1000 ppb Stock Solution 2. Prepare Stock Solution 4 (100 ppb) from the 1000 ppb Stock Solution 2. Preparation parameters are given below. Prepare in disposable beakers Standards 1 (75 ppb), 2 (50 ppb), and 3 (10 ppb) from Stock Solutions 2, 3, and 4 as described below.

$$\text{Stock 1} = \frac{(0.02\ \text{ml})(1000\ \text{ppm})}{2\ \text{ml Furnace } H_2O} = 10\ \text{ppm or } 10000\ \text{ppb}$$

$$\text{Stock 2} = \frac{(0.20\ \text{ml})(10\ \text{ppm})}{2\ \text{ml Furnace } H_2O} = 1000\ \text{ppb}$$

$$\text{Stock 3} = \frac{(1.0\ \text{ml})(1000\ \text{ppb})}{2\ \text{ml Furnace } H_2O} = 500\ \text{ppb}$$

$$\text{Stock 4} = \frac{(0.20\ \text{ml})(1000\ \text{ppb})}{2\ \text{ml Furnace } H_2O} = 100\ \text{ppb}$$

$$\text{Std. 1} = \frac{(0.15\ \text{ml})(1000\ \text{ppb})}{2\ \text{ml Furnace } H_2O} = 75\ \text{ppb}$$

$$\text{Std. 2} = \frac{(0.20\ \text{ml})(500\ \text{ppb})}{2\ \text{ml Furnace } H_2O} = 50\ \text{ppb}$$

$$\text{Std. 3} = \frac{(0.20\ \text{ml})(100\ \text{ppb})}{2\ \text{ml Furnace } H_2O} = 10\ \text{ppb}$$

3. 1000 ppb will be used as the analytical spiking solution.

4. Label 4 sample cups: 10 ppb, 50 ppb, 75 ppb and Blank. Add 1 ml of each concentration of standard to its respective cup and 1 ml of furnace water to the fourth for the blank.

5. Prepare standards daily.

B. QC Preparation

1. Using ICVC, prepare the ICV and CCV's in a sample cup as follows:

$$\frac{(10\ \mu l\ \text{of ICVC})}{1\ \text{ml}} = \text{a final concentration of 50.0 ppb}$$

True Value of ICVC (8/94) = 1000 ppb.

2. ICB and CCB preparation is the same as the preparation for the blank standard.

3. A CCV (ICV) and a CCB (ICB) must be run for every ten samples analyzed, at the beginning and the end of the run.

C. Sample Preparation

1. Treat preparation blanks (PB), laboratory control samples (LCS), digested spikes, and duplicates as samples.

2. The LCS soil needs a dilution before analyzing. Refer to the certificate of analysis for the true value to determine the dilution it will require.

3. The LCS water (LCSW = ICVC) does not need dilution. The true value is 50.0

4. To sample cups add one ml of sample.

5. Analytical Spike Preparation

A 20 ppb analytical spike is required of all samples, prep. blanks, LCS's, and duplicates. It is not required on a digested spike.

Prepare an analytical spike (using 1000 ppb spiking solution prepared with the standards) in a sample cup:

$$\frac{(20\ \mu l \text{ of } 1000\ ppb)}{1\ ml} = 20\ ppb + \text{the sample concentration}$$

6. Prepare a Thallium bench sheet (Figure 4) in the following sequence:

   a) ICV
   b) ICB
   c) CRA (the lowest standard in the calibration line)
   d) PB (either water, soil or both; see QC rules)
   e) PBA
   f) LCS (either water, soil or both)
   g) LCSA
   h) Sample
   i) SampleA
   j) SampleD (duplicate)
   k) SampleDA
   l) SampleS (digested spike)
   m) CCV1
   n) CCB1

   The "A" following the sample indicates the analytical spike. It may be necessary to run a CCV and CCB before 10 samples have been run to avoid splitting up an analytical spike and its sample.

   The Benchsheet is created directly in the computer which utilizes the Multipro software program.
   This program is able to acquire data directly from the instrument.
   To use this program, turn the computer on.
   MENU will appear on the screen with the following submenu:

   1. ANALYST'S NOTEBOOK

   2. NETWORK

   3. EMERGENCY LOCAL ANALYST NOTEBOOK OPERATION

   Type 1 and the password.
   Select the printer to which you want your work directed to.

   The Multipro screen will then appear with the menu:

   "System, Analysis, Methods, Data Entry, Export Data, Reports".

   Go to method and load. Press "Enter", and type TL.

Go to "Analysis" select "Add New Run".
Then name your runfile, your initial, date of the run and run number. Press "Enter."

Go to "Incomplete backlog". Here you are automatically loading workorder(s) that you want to run. You can load by department or by testcode.
To load by department, type "INGF", or type "279_2" or "7841" whichever is applicable if you are loading by test code.
The list of workorders will then appear, Press "Enter" on any workorder you choose. Press "F10" when you finish your selection to load the selected workorder(s). Enter "Y" for default of analytical spike "AS."

Go to "Data Entry" and hit "Enter".

Select "Modify data".
Go to Edit Sequence. All the loaded workorder should be here. Modify your benchsheet to reflect what it should look like. Insert the approriate quality controls where they should be by using the insert key.
The quality control requirements must be met.
Please refer to the quality control section of this procedure.
When this is completed then go to "Acquire Data."
Press "Enter" and again press "F10" to commit.
In the default mode type "LR" (Linear Regression).
Enter the number of replicates.
Enter "Y" to to record time of runs.
Then press "F10" one more time to start acquiring your data.

Note: The "PRINT" key on the instrument must be on for the multipro to acquire data.

D. Tuning and Calibration of Instrument

1. Turn on the furnace in the following sequence:

   a. cooling water on

   b. furnace power on

   c. computer screen on

   d. PC computer (MULTIPRO) with attached printer on

2. Make sure there is enough deionized water in the white plastic water bottle located under the autosampler.

3. Check the graphite tube to see if it is still usable. (Press the "furnace" button to open the furnace where the tube is.) If it is overly charred or bent, replace the tube and platform.

Make sure the injection hole is lined up correctly.

4. Attach the light source (EDL or HCL).

   a. For EDL:

      1) Attach to cable running to EDL power supply.
      2) Turn on power supply.
      3) Start the UV light with the "UV starter".
      4) Turn the power supply to 8 watts.

   b. For HCL:
      1) Plug into GFA
      2) Set to 10 amps on program page. (later)

5. Press "user index" control key to find user index page.

6. Select the method # that corresponds to Thallium by entering in the number and pressing "recall" control key. A method that has already been set up will appear (Figure 1).

7. Set the wavelength at 276.8. Set the slit width at 0.7 nm.

8. Press the "set up" control key for the "SET UP MODE INSTRUMENT" page. Adjust the lamp by turning the metal knobs by the lamp to gain the maximum energy. Press the "gain" key to rescale and increase energy. The energy should be approximately 50. The lamp will need some time to warm up (15-30 min.).

9. Go to the "PROGRAM INSTRUMENT MODE" page by pressing the "prog" key. Advance or backup through this page by using the keys at the bottom. This page should appear as shown in Figure 1. If using a hollow cathode lamp, set the amps at 10 or whatever is required by the lamp manufacturer.

10. Press the "prog" button again for the "PROGRAM MODE HGA 600" page. Use the keys on the bottom to move around the screen. The first two steps are the drying temperatures; the second two are the pretreat temps.; the third is the atomization temp.; and the last is the burn off temperature. The ramp time is the time the furnace takes to reach the corresponding temperature and the hold time is how long that temperature is held before the next step. The set up on this page should be as described in Figure 2.

11. Press the "prog" button again to go to the "PROGRAMMING MODE AUTOSAMPLER" page. Use the keys at the bottom to move around the screen. Enter the location of which your standards (1-4) and samples (starting at location 5) are in the autosampler.

    Enter in the injection volume specified for the standards and samples (See Figure 3). Now you are ready to begin the

analysis.

E. Sample Analysis

1. Press the "run" button and a screen with a blank graph will appear.

2. If a "check" key at the bottom of the page appears, press this first. This will tell you if there is anything wrong with the program set up.

3. Now press the "sampler reset" key at the bottom of the screen. This resets the autosampler.

4. Now press the "sampler on/off" key at the bottom of the screen. This starts and stops the autosampler.

5. Make sure the printer is on line and press the print key to print out the results.

6. When the last standard is running, press the "autosampler on/off" key again to stop after the last standard. Check the calibration. The correlation must be at least .995 or better.

7. Record the absorbance of the highest standard in the Graphite Furnace Run Log (Figure 5), located at each furnace instrument.

8. Enter in the number of the first sample in the autosampler, a period and then the number of the last sample (ex. 1.32). This will tell the autosampler where to stop. Now press the "autosampler on/off" key again to start the analysis of the samples.

9. A "run finished" will appear on the screen when the run is completed.

10. Fill out the Graphite Furnace Run Log (Figure 5) for samples or cases run that day.

Other key functions:

11. "Cont" enables you to see a bar graph of the relative signal. Also, by using the keys at the bottom of the screen, the instrument can be autozeroed, the injector can be flushed with DI water, and the injector can be moved into and out of the DI water.

12. "Display Graph" displays the graph of the sample that was run last.

13. "Display Calib." displays the calibration curve.

14. "Display Suppl" displays the absorbances and the results.

15. "New keys" allows you to start the calibration from the middle if one of the calibration points was off.

16. "Store" stores the method in the user index.

17. "Print Screen" prints the screen displayed.

18. "Print" prints the results.

The keys at the bottom of the display screens:

19. "HGA on/off" turns the furnace on or off.

20. "Manual temp." turns the furnace temp. on until you press it again.

21. "Skip Step" skips the current step and progresses to the next one.

22. "Manual Position" tell the autosampler to run the specific sample entered.

F. Trouble Shooting and Corrective Action

1. The calibration curve is below .995.

   a. The standards may need to be remade.

   b. The temperatures or times may need to be adjusted.

2. The values are all coming out very low or zero.

   a. Make sure the autosampler is injecting into the graphite tube.

3. The values are low.

   a. The tube may need changing.

4. "High tube impedence" error message appears.

   a. The tube needs changing.

5. "The instrument cannot set gain (no energy)" error message appears.

   a. Check the wavelength

b. Check to see if the power supply is on.
c. Make sure nothing is blocking the light source.

d. Check to see if the correct lamp is connected.

6. ICV fails

a. Check absorbances of standards for possibility of incorrect dilution.

b. Remake ICV and if it still fails, recalibrate and try again.

7. High negative values.

a. There is a high matrix interference and the sample needs to be diluted.

G. Calculations

1. % Recovery for ICV, CCV's, LCS

$$\frac{\text{Obtained value}}{\text{True Value}} \times 100$$

2. % Recovery for spikes and analytical spikes.

$$\frac{\text{Spike value} - \text{Sample value}}{\text{Spiked conc.}} \times 100$$

3. If the value is below the IDL, a zero is used for calculations.

VI. QUALITY CONTROL

A. The instrument must be calibrated every time a new run is started or every 24 hours.

B. After a new calibration, the run must begin with an ICV followed by an ICB and a CRA.

C. QC's and blanks must be run every ten samples or every two hours (whichever is more frequent).

D. A Prep blank, LCS, Duplicate, and Digested Spike must be run for every SDG or every 20 samples within an SDG (soil for soil samples, water for water samples, or both for both matrices).

E. The coefficient variation must be < 20%

F. % Recoveries or limits:

ICV	± 10%
CCV	± 10%
ICB	Less than the lowest standard
CCB	Less than the lowest standard
PB	Less than the lowest standard
PBA	± 15%
LCSW	± 20%
LCSWA	>40%
LCSS	between 335 ppb and 1025 ppb ERA 220 7/94)
LCSSA	>40%
SAMPLE-A	± 15%

1. If the ICV fails, the adjustments must be made and the instrument recalibrated.

2. If a CCV fails, the run must be stopped, the instrument recalibrated and the preceding 10 samples must be rerun.

3. If the ICB fails, autozero the instrument, recalibrate and run again. If it still fails, check for contaminants in the furnace water or the matrix modifier.

4. If a CCB fails, stop the run, autozero and recalibrate. The preceding 10 samples must be rerun.

5. If a prep blank fails, rerun once. If it still fails, the samples are contaminated and must be redigested.

6. If PBA fails, the spiking solution must be remade and the PB and PBA must be rerun. If it still fails, there are interferences and the samples must be redigested.

7. If an LCS fails, rerun once. If it still fails, the samples must be redigested.

8. If an LCSA fails, rerun the LCS and LCSA once. If it still fails, there are interferences and the samples must be redigested.

9. If an analytical spike of a sample is between 40% and 85%, an MSA is required. Exception: if the spiked result is > 3 X the value of the sample.

   MSA preparation: Spike the sample at 50%, 100% and 150% of the found concentration of the sample. Only a single injection is required. If the correlation is below 0.995, rerun once. Report the value with the best correlation.

10. If the analytical spike of a sample is < 40%, dilute and rerun.

VII. SAFETY

A. Equipment

1. Lab coat

2. Safety glasses

3. Plastic gloves

B. Potential hazards

1. UV light source is hazardous to the eyes if looked at directly.

2. The furnace temperature is very high. Wait a minute before checking tube in furnace after operating.

3. Fumes emitted from the furnace are potentially hazardous. A ventilation system provided over each furnace to remove these fumes.

VIII. DISPOSAL REQUIREMENTS

A. The samples are held for three months in a storage room.

B. The samples are neutralized and washed down the drain according to SOP 9.1, Hazardous Waste Disposal.

IX. REPORTING REQUIREMENTS

A. 1. The raw data must be recorded in ink and must contain on the first page:

a. Analyst's initials

b. Date

c. Element analyzed

d. Standard source and lot #

e. ICV source

f. Work order

2. Each sample must be identified in the raw data by the appropriate name designated by the client.

3. Each sample must have an analysis time associated with it in the raw data.

4. MSA analysis must be accompanied by the correlation, calculated value, slope, and intercept in the raw data.

5. The following information must be recorded in the Graphite Furnace Run Log (Figure 5): date, element, highest standard, units of highest standard, lamp energy, time, absorbance, analyst's name, work order #, and fractions run.

6. The following information must be recorded on the Thallium Bench Sheet (Figure 4): instrument ID, date of analysis, analyst's name and signature, review date, reviewer's signature, work order number, time analysis initiated.

7. All maintenance, both routine and unexpected, shall be recorded on a Maintenance Log sheet (Figure 6) which is kept in the "Maintenance Log" Book for each instrument.

Figure 2

Furnace Program - heating times and temperatures

PROGRAMMING MODE INSTRUMENT USER METHOD # 4 - TL DATE: _____

ELEMENT: TL WAVELENGTH (NM): 276.8 SLIT (NM): 0.7
PYRO COATED TUBE WITH PLATFORM - MAX POWER HEATING - GAS STOP - MATRIX MOD.
PRETREAT TEMP: 600 ATOMIZE TEMP: 1400 CHARACT.MASS (PG) 17.0

STEP NUMBER	FURNACE TEMPERATURE	TIME RAMP	TIME HOLD	INTERNAL GASFLOW	READ	RECORDER
1	120	1	10	300	-	-
2	220	5	5	300	-	-
3	600	1	10	300	-	-
4	20	1	5	0	-	-
5	1450	0	5	0	*	-
6	2500	1	4	300	-	-

Figure 3

Furnace Program - Autosampler controls

PROGRAMMING MODE AUTOSAMPLER USER METHOD # 4 - TL DATE: _____

SOLUTIONS	LOCATION	VOLUME	BLANK VOLUME
BLANK	--	--	20
STANDARD 1	--	--	__
STANDARD 2	--	--	__
STANDARD 3	--	--	__
STANDARD 4	--	--	__
STANDARD 5	--	--	__
STANDARD 6	--	--	__
STANDARD 7	--	--	__
STANDARD 8	--	--	__
RESLOPE	--	--	__
MATRIX MODIFER 1	--	--	__
MATRIX MODIFER 2	--	--	__
SAMPLE 01 TO 40 WITH MODIFER - - -		20	__
SAMPLE -- TO -- WITH MODIFER - - -		--	__

RECAL LOCATIONS: -- : -- : -- : -- NUMBER OF INJECTIONS: 01

NOTE: No modifier used.

Figure 4

95-06-133
95-06-148
95-06-149
95-06-179
95-06-220

BENCE SHEET
Thallium

Page 1

DATA FILE: TL71095A
INSTRUMENT FILE: TL71095A

CASE:
INSTRUMENT: 3050

SDG:
ANALYZED: 07/10/95 FU 7-10

SEQ	LAB ID	CLIENT ID	MATRIX	DILUTION	SIZE	VOLUME	%SOLIDS	ANALYZED	
1	0.00 ug/L	S0	WATER	1.00	100.000	100.000	100.00	07/10/95	06:33
2	10.0 ug/L	S10	WATER	1.00	100.000	100.000	100.00	07/10/95	06:36
3	20.0 ug/L	S20	WATER	1.00	100.000	100.000	100.00	07/10/95	06:39
4	75.0 ug/L	S75	WATER	1.00	100.000	100.000	100.00	07/10/95	06:42
5	ICV	ICV	WATER	1.00	100.000	100.000	100.00	07/10/95	06:45
6	ICB	ICB	WATER	1.00	100.000	100.000	100.00	07/10/95	06:48
7	CRA	CRA	WATER	1.00	100.000	100.000	100.00	07/10/95	06:51
8	PBW 07-07-95	PBW 07-07-95	WATER	1.00	100.000	100.000	100.00	07/10/95	06:54
9	PBW 07-07-95A	PBW 07-07-95A	WATER	1.00	100.000	100.000	100.00	07/10/95	06:57
10	PBS 07-07-95	PBS 07-07-95	SOIL	1.00	1.000	100.000	100.00	07/10/95	07:00
11	PBS 07-07-95A	PBS 07-07-95A	SOIL	1.00	1.000	100.000	100.00	07/10/95	07:03
12	LCSW	LCSW	WATER	1.00	100.000	100.000	100.00	07/10/95	07:06
13	LCSWA	LCSWA	WATER	1.00	100.000	100.000	100.00	07/10/95	07:09
14	LCSS	LCSS	SOIL	10.00	1.000	100.000	100.00	07/10/95	07:12
15	LCSSA	LCSSA	SOIL	10.00	1.000	100.000	100.00	07/10/95	07:15
16	CCV1	CCV1	WATER	1.00	100.000	100.000	100.00	07/10/95	07:18
17	CCB1	CCB1	WATER	1.00	100.000	100.000	100.00	07/10/95	07:21
18	9506132-02E	E36-SW24-00-126	WATER	1.00	100.000	100.000	100.00	07/10/95	07:24
19	9506132-02EA	E36-SW24-00-126A	WATER	1.00	100.000	100.000	100.00	07/10/95	07:27
20	9506132-02ED	E36-SW24-00-126D	WATER	1.00	100.000	100.000	100.00	07/10/95	07:30
21	9506132-02EDA	E36-SW24-00-126DA	WATER	1.00	100.000	100.000	100.00	07/10/95	07:33
22	9506132-02ES	E36-SW24-00-126S	WATER	1.00	100.000	100.000	100.00	07/10/95	07:36
23	9506132-04E	E36-SW24-00-129	WATER	1.00	100.000	100.000	100.00	07/10/95	07:39
24	9506132-04EA	E36-SW24-00-129A	WATER	1.00	100.000	100.000	100.00	07/10/95	07:42
25	9506132-06E	E36-SW26A-00-133	WATER	1.00	100.000	100.000	100.00	07/10/95	07:45
26	9506132-06EA	E36-SW26A-00-133A	WATER	1.00	100.000	100.000	100.00	07/10/95	07:48
27	CCV2	CCV2	WATER	1.00	100.000	100.000	100.00	07/10/95	07:51
28	CCB2	CCB2	WATER	1.00	100.000	100.000	100.00	07/10/95	07:54
29	9506133-01E	E36-SD24-01-128	SOIL	1.00	1.000	100.000	51.20	07/10/95	07:57
30	9506133-01EA	E36-SD24-01-128A	SOIL	1.00	1.000	100.000	51.20	07/10/95	08:02
31	9506133-02E	E36-SS24-01-131	SOIL	1.00	1.000	100.000	70.10	07/10/95	08:05
32	9506133-02EA	E36-SS24-01-131A	SOIL	1.00	1.000	100.000	70.10	07/10/95	08:08
33	9506133-03E	E36-SS19-01-139	SOIL	1.00	1.000	100.000	82.30	07/10/95	08:11
34	9506133-03EA	E36-SS19-01-139A	SOIL	1.00	1.000	100.000	82.30	07/10/95	08:14
35	9506133-04E	E36-SD24-01-132	SOIL	1.00	1.000	100.000	33.50	07/10/95	08:17
36	9506133-04EA	E36-SD24-01-132A	SOIL	1.00	1.000	100.000	33.50	07/10/95	08:20
37	9506133-05E	E36-SD26A-01-135	SOIL	1.00	1.000	100.000	80.70	07/10/95	08:23
38	9506133-05EA	E36-SD26A-01-135A	SOIL	1.00	1.000	100.000	80.70	07/10/95	08:26
39	CCV3	CCV3	WATER	1.00	100.000	100.000	100.00	07/10/95	08:29
40	CCB3	CCB3	WATER	1.00	100.000	100.000	100.00	07/10/95	08:32

[illegible] FU 7-10-95
Analyst / Date

[illegible] 7/10/95
~~Lab Supervisor / Date~~

Figure 5

GP ENVIRONMENTAL SERVICES FURNACE RUN LOG

INSTRUMENT ID: 3050 DOCUMENT CONTROL NUMBER:_____ PAGE NO._____

DATE_____ TIME_____ ELEMENT_____ WORK ORDER # / FRACTIONS

HIGHEST STD_____UG/L ABS_____ _____/_____

STD SOURCE_____ ICV SOURCE_____ _____/_____

DATAFILE NAME_____ LAMP ENERGY_____ _____/_____

METHOD FILE_____ FURNACE PROG ____ _____/_____

COMMENTS_____ _____/_____

_____ _____/_____

_____ _____/_____

ANALYST'S NAME_____ _____/_____

DATE_____ TIME_____ ELEMENT_____ WORK ORDER # / FRACTIONS

HIGHEST STD_____UG/L ABS_____ _____/_____

STD SOURCE_____ ICV SOURCE_____ _____/_____

DATAFILE NAME_____ LAMP ENERGY_____ _____/_____

METHOD FILE_____ FURNACE PROG ____ _____/_____

COMMENTS_____ _____/_____

_____ _____/_____

_____ _____/_____

ANALYST'S NAME_____ _____/_____

DATE_____ TIME_____ ELEMENT_____ WORK ORDER # / FRACTIONS

HIGHEST STD_____UG/L ABS_____ _____/_____

STD SOURCE_____ ICV SOURCE_____ _____/_____

DATAFILE NAME_____ LAMP ENERGY_____ _____/_____

METHOD FILE_____ FURNACE PROG ____ _____/_____

COMMENTS_____ _____/_____

_____ _____/_____

_____ _____/_____

ANALYST'S NAME_____ _____/_____

Figure 6

3-27-95 New Graphite tube installed FCL.

4-3-95 New Graphite tube installed FCL.

4-6-95 Computer screen shaking when instrument is not operational. Turned instrument off. Appears to arise from power source.

4-11-95 Graphite tube changed FCL

4-19-95 New graphite tube installed FCL

4-27-95 New Graphite tube installed FCL

5-3-95 New Graphite tube installed FCL

5-11-95 New Graphite tube installed FCL
windows cleaned FCL.

5-16-95 New Graphite tube installed FCL

6-1-95 New Graphite tube installed FCL

6-13-95 New graphite tube installed FCL

6-27-95 New graphite tube installed FCL

7-3-95 New graphite tube installed FCL

Figure 7

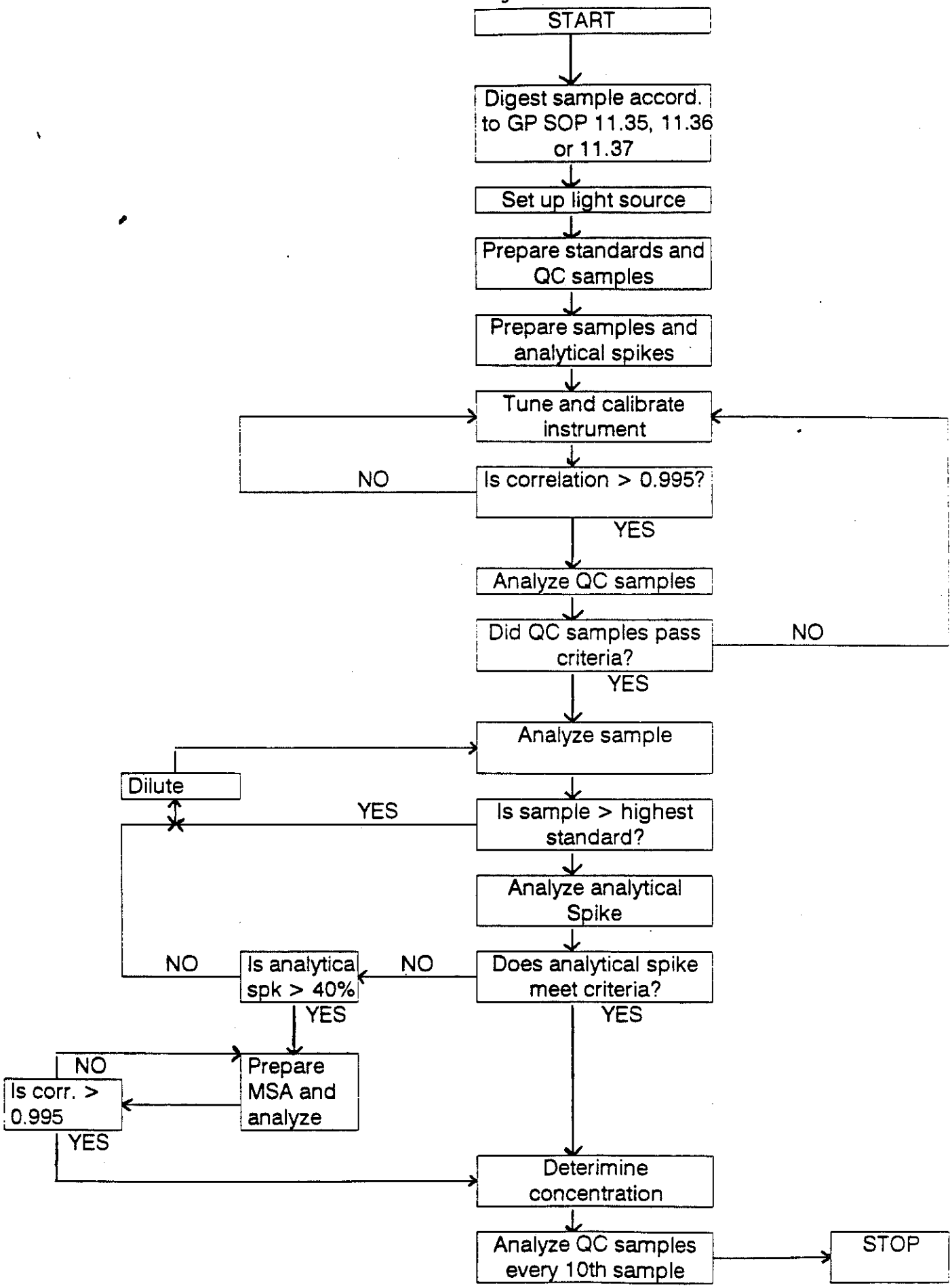
START
Digest sample accord. to GP SOP 11.35, 11.36 or 11.37
Set up light source
Prepare standards and QC samples
Prepare samples and analytical spikes
Tune and calibrate instrument
Is correlation > 0.995?
NO
YES
Analyze QC samples
Did QC samples pass criteria?
NO
YES
Analyze sample
Dilute
Is sample > highest standard?
YES
Analyze analytical Spike
Does analytical spike meet criteria?
NO
YES
Is analytical spk > 40%
NO
YES
Prepare MSA and analyze
Is corr. > 0.995
NO
YES
Deterimine concentration
Analyze QC samples every 10th sample
STOP

ENVIRONMENTAL SERVICES

Effective Date: July 1995
Version Number: 1
Initiated By :
Approved By :

SOP No.: 11.39

Title : Cold Vapor Analysis for Mercury in Accordance with SW846 Methods 7470A and 7471A.

Scope : The method detailed in this procedure explains the analysis of water, soil and sediment, of mercury by the Manual Cold Vapor Technique in accordance with SW 846 methods 7470A and 7471A

I. PURPOSE

To quantify both organic and inorganic forms of mercury in water, soil and sediment. The sample holding time is 28 days from sample collection.

II. REFERENCES

SW 846 method 7470A Revision 1 and 7471A Revision 1

Leeman Labs PS200 Manual, Leeman Labs, Inc., Lowell, MA, Part No. 150-00018.

III. EQUIPMENT AND SUPPLIES

A. Mercury Digestion Equipment

- 300mL BOD bottles with glass stoppers
- hot plates
- hot water bath trays
- 5000 µL pipet with tips (Oxford)
- 1000µL pipet with tips (Eppendorf)
- 100µL pipet with tips (Eppendorf)
- 5mL disposable cups (plastic)
- 100mL graduated cylinders, class A
- balance capable of accurately measuring 0.200 grams (± .001g)
- squirt bottle filled with deionized water
- squirt bottle filled with 2% nitric acid
- squirt bottle filled with 10% hydrochloric acid
- Parafilm squares for mixing standards in volumetric flasks
- thermometer traceable to NIST, alcohol based.

B. Leeman Labs Automated Mercury Analyzer, Model PS200

C. Air source capable of delivering 1 liter of air per minute, argon source.

IV. REAGENTS

A. Concentrated Nitric Acid, Trace Metals Grade.

B. Concentrated Sulfuric Acid, Trace Metals Grade.

C. Concentrated Hydrochloric Acid, Trace metals Grade.

D. Potassium Permanganate solution, 5% w/v. Dissolve 50g Potassium Permanganate to a final volume of 1 liter of distilled water.

E. Potassium Persulfate solution, 5% w/v. Dissolve 50g Potassium Persulfate to a final volume of 1 liter of distilled water.

F. Stock Mercury solution, 1µg/mL, traceable to NBS standard reference materials. (Source: High Purity Standards, Charleston, SC).

G. Stannous chloride (10%). Dissolve 100g of Stannous chloride to 1 liter of 10% HCl. [Leeman requires the use of 10% Stannous chloride in 10% HCl, DO NOT SUBSTITUTE stannous sulfate or sulfuric acid as described in the EPA method.]

H. 10% Hydrochloric acid. To a 20L HDPE carboy, add 10L deionized water, then add 2000mL of concentrated hydrochloric acid. Add deionized water to 20L final volume, cap container and mix. Record initials, date of preparation, and lot number of acid on side of carboy.

I. Deionized water ASTM Type II or equivalent.

J. Sodium chloride - Hydroxylamine sulfate solution - Dissolve 12g of sodium chloride and 12g of hydroxylamine sulfate in deionized water and dilute to 100ml (Hydroxylamine hydrochloride may be used in place of hydroxylamine sulfate).

K. Mercury scrubber solution - 0.1N Potassium Permanganate in 10% Sulfuric Acid, or 0.25% Iodine in a 3% Potassium Iodide solution.

L. ICV Solution, Laboratory Control Sample Solid.(ICVE from High Purity Standards, Charleston, SC; LCSS from Environmental Resource Associates, Arvada, CO.)

V. PROCEDURE (See Figure 5 for flow chart)

A. Preliminary Preparations.

1. Read workorders and test sheets for assigned samples, noting which samples are selected for duplicate and spike analysis. Review special instructions and submit sample request form to sample receiving for assigned samples.

2. Obtain samples from sample receiving and verify the identity of each sample. Record in the Mercury Digestion Log Form the date of digestion, analyst initials, and make an entry for each sample assigned (workorder-sample-fraction, and client ID) using one line for each sample, standard, quality control check standard, blank, duplicate, spiked sample, and laboratory control sample.

3. Prepare BOD bottles for each entry by writing with permanent ink on the outside of the bottle the workorder number, the sample number, and fraction--for duplicate of spikes, using "DUP" and "SPK".

B. Sample Digestion for Waters

1. In the metals digestion lab measure 100.0mL of water or leachate sample into a clean, 100mL graduated cylinder and transfer sample into a clean, labelled 300mL BOD bottle. Stopper the BOD bottle, replace onto spill cart.

2. In the hood, to each bottle, add 5.0mL of concentrated sulfuric acid, 2.5mL of concentrated nitric acid, and 15mL of 5% potassium permanganate solution. Mix sample after each addition. After the first 3 reagents have been added let the samples sit for 15 minutes. If a sample does not retain a purple color after sitting for 15 minutes, add additional potassium permanganate in 8mL increments until the sample is able to sit for 15 minutes without losing color. Do not add more than 32mL of potassium permanganate to any sample. Record the amount of permanganate added, if additional permanganate was required.

3. Add 8mL of 5% potassium persulfate solution to each sample.

4. Set up water bath and pre-heat to 95°C using a NBS traceable thermometer to check temperature. (Cover the pan with aluminum foil to retain the water lost through evaporation and maintain temperature.) When water bath has reached the correct temperature, record temperature in digestion log, and place bottles in water for 2 hours.

5. Remove samples from water bath and allow samples to cool to room temperature. Add 6mL of Sodium Chloride (Hydroxylamine Hydrochloride) solution and swirl bottle to mix so that all traces of permanganate will be reduced. [Caution: the addition of this solution produces an effervesence which could cause back-pressure build up and force out the glass stopper. After adding the hydroxylamine to the sample, let the pressure vent off by removing the glass stopper periodically.]

6. Samples are ready for analysis.

C. Sample Digestion for Soils and Sediments

1. Use an analytical balance to measure a representative 0.20g (± .001g) soil, or sludge, Laboratory Control Sample - Solid (LCSS) ERA220 , or sediment sample into a small weigh boat. Wash the sample into a clean, labelled 300mL BOD bottle using a minimum of distilled water dispensed from a squirt bottle. Stopper the BOD bottle. When all samples have been measured, return the unused portion of sample to sample receiving, then transport the measured portion of sample to the high concentration lab.

2. Add 5mLs of concentrated sulfuric acid, and 2.5mL of concentrated nitric acid to the sample, mixing after each addition. Heat sample for 2 minutes at 95°C.

3. Allow bottles to cool. Add 55mL of distilled water, 15mL of potassium permanganate, and 8mL of potassium persulfate to each bottle. If a bottle turns clear or yellow within 15 minutes, add 8mL of potassium permanganate. Add potassium permanganate in 8mL aliquots until purple color persists for 15 minutes. Heat samples in water bath in hood in the high concentration room for 30 minutes.

4. Allow samples to cool to room temperature. Add 6mL of Sodium Chloride (Hydroxylamine Hydrochloride) solution to reduce the excess permanganate.

D. Standards and QC Preparation

Standard must be prepared in the same manner as a sample. Standards are prepared using weight-weight dilutions with 2% HNO_3 using the analytical balance and pre-leached HDPE containers. [Alternatively, volumetric dilutions can be used.]

1. 10ppm Hg intermediate stock in 2% HNO_3. Pipet 0.5000g of 1000ppm Hg stock standard into a tared plastic container. Record the mass dispensed and add 2% HNO_3 until the weight dispensed is 50.0000g. Record final mass.

2. 0.1ppm (100ppb) Hg working solution. Pipet 1.000g of 10ppm Hg intermediate stock standard into tared plastic container. Record mass dispensed. Add 2% HNO_3 until reading is 100.000g. Record final mass.

Standards for Water Samples.

3. 5.0ppb Calibration standard. Pipet 5.0g of 100ppb into tared plastic container. Record mass dispensed. Add 2% HNO_3 until final mass is 100g. Record mass. Transfer into BOD bottle.

4. 2.0ppb Calibration standard. Pipet 2.0g of 100ppb into tared plastic container. Record mass dispensed. Add 2% HNO_3 until final mass is 100g. Record mass. Transfer into BOD bottle.

5. 1.0ppb Calibration standard. Pipet 1.0 g of 100ppb into tared plastic container. Record mass dispensed. Add 2% HNO_3 until final mass is 100g. Record mass. Transfer into BOD bottle.

6. 0.5ppb Calibration standard. Pipet 0.5g of 100ppb into tared plastic container. Record mass dispensed. Add 2% HNO_3 until final mass is 100g. Record mass. Transfer into BOD bottle.

7. 0.1ppb Calibration standard. Pipet 0.1g of 100ppb into tared plastic container. Record mass dispensed. Add 2% HNO_3 until final mass is 100g. Record mass. Transfer into BOD bottle.

8. 0.2ppb CRA standard. Pipet 0.2g of 100ppb into tared plastic container. Record mass dispensed. Add 2% HNO_3 until final mass is 100g. Record mass. Transfer into BOD bottle.

9. Calibration blank. Add 100g 2% HNO_3 to tared plastic container and tranfer to BOD bottle.

10. ICV working solution (0.1ppm) Pipet 0.500g of ICVE (20ppm) into tared plastic container. Record mass dispensed. Add 2% HNO_3 until final mass is 100g. Record mass.

11. ICV check solution (2.5ppb) Pipet 2.500g of ICVE working solution (0.1ppm) into tared plastic container. Record mass dispensed. Add 2% HNO_3 until final mass is 100g. Record mass. Final concentration is 2.5ppb. Transfer into BOD bottle.

12. ICB check solution. Add 100g 2% HNO_3 to tared plastic container and tranfer to BOD bottle.

13. Preparation Blank for Water. (PBW) Add 100mL deionized water using graduated cylinder into BOD bottle.

14. Laboratory Control Sample (LCSW) Add 100mL deionized water using graduated cylinder to BOD bottle. Spike with 1.0mL of 0.1ppm Working standard.

Standards for Soil Digestion.

15. Pipet 0, 0.1, 0.5, 1.0, 2.0, and 5.0ml. aliquots of 0.1ppm Working standard directly into BOD bottle. Add 5.0, 4.9, 4.5, 4.0, and 3.0ml compensating volumes of 2% HNO_3. Additional, pipet 0.2 mL of 0.1ppm Working standard for CRA and 4.8ml. 2% HNO3.

16. ICV for soils: Pipet 2.5mL of 0.1ppm ICVE solution and 2.5mL of 2% HNO_3.

17. Preparation Blank. Pipet 5.0mL of DI water.

(note: during the digestion, use only 50 ml of ASTM type II water during step C.3 for the standards to compensate for the volume of water added in the beginning.

E. Tuning and Calibration of Instrument PS200.

1. Maintenance: change wash bath (daily), change drying tube filled with coarse magnesium perchlorate (daily), check pump tubing (replace weekly), reductant level, and waste vessel.

2. Change Wash bath: Press F10 to interrupt overnite macro. Press Utilities, Diagnostics, then select "tip home" with cursor keys and press enter (autosampler tip will move up allowing water bath to be removed). Pour off old wash acid into disposal container, rinse with tap water, clean with soap, fill with 1:1 nitric acid for leaching for 1 hour, rinse with DI water, and refill with 10% HCl acid. Replace water bath and press F1, Instrument, Tip to rinse.

3. Replace Drying tube: Remove wash bath (see above), Pull off end caps, and remove drying tube. Immerse tube in water to remove unused magnesium perchlorate, discard old quartz wool. Clean tube thoroughly, dry, and repack with quartz wool and magnesium perchlorate. Verify that particles of magnesium perchlorate can not enter the small tubing, thereby impeding the flow of gas creating back-pressure. Check pump tubing: Remove cassette from pump housing. Replace tubing on weekly basis.

4. Run macro "warmstrt": press F2, type "WARMSTRT" and press enter.

5. Run test optics macro after "warmstrt". Utilities, Diagnostics, select TEST OPTICS using cursor keys, press enter. The readings in microvolts should be within 1000 of each other and both should be above 450000. Inbalances can be adjusted using the aperature adjustment screws located on the cell. If the test optic value for the sample tube is greater than the reference tube, screw in the aperature for the sample tube (bottom screw) to block a portion of light and recheck as necessary until both are within 1000 of each other. Record final readings on instrument use log.

6. Data Storage. Set up file to receive data. Press Data, Folder, enter the name of folder then press enter. A batchname can be used to separate runs within a folder. Press F1, F4 to enter reports submenu, then press H for batch, at prompt enter new batch name, then press enter. All results will be associated with this name for later retrieval for importing into the laboratory's database.

7. Instrument Calibration. Load standards onto standards rack, run "CAL6PT" macro, press F2, type CAL6PT, press enter. Intrument will now run standards 1 to 6 in triplicate. If curve linearity is greater than .998, and the deviation of blank is within 0.1ug/L, press A to accept the curve and press F3 to print out calibration curve.

8. Verify calibration with check standard and check blank. Load ICV solution into standard rack position C2, and check blank into C3. Press F6, then press 2 to run check standard 2 (ICV), then press F6, 3 to run check blank. If results are within control limits of 80 -120%, set frequency of the check samples to 10% and the instrument will automatically run check sample 2 and then check sample 3 every 10 samples.

9. Rack Entry: Press Autosampler, Rack Entry, type in initials then month, day, and a letter in the following format XXMMDDA. (If more than one rack will be prepared, use XXMMDDB.) At the prompt reply Y for new rackfile and begin entering sequence of tubes. Note that the weight and volumes fields will not be used (size and volume will be entered in a post-run file.)

10. Set up autosampler. Press F1, Autosampler, Set up, press 1, then enter name of rackfile for rack 1, then enter starting position and ending position. Press F8, then F8 again to begin autosampler run.

Trouble Shooting Guide. Refer to Leeman Labs Manual.

VI. QUALITY CONTROL

A. Calibration standards must be prepared fresh daily from stock standards. The deviation of each standard must be within 5% of the standard's concentration or the run must be terminated and the instrument recalibrated.

B. Initial Calibration Verification Check solution. An ICV solution is prepared from an independent standard as the calibration standards are prepared. This solution is then digested with the samples and is the 1st check standard to be run. If recovery is outside 80-120% window, the run terminates. Recalibrate and rerun the ICV and ICB.

C. Continuing Calibration Check solution. The ICV solution is used as the CCV solution.

D. Initial and Continuing Blank Solution. A blank solution, separate from the calibration blank, is digested with the standards and analyzed at after each ICV and CCV. Criteria is +/- 0.2ug/L.

E. CRA solution. A solution of 0.2ug/L Hg is prepared as calibration standards are being prepared and is analyzed at the beginning of the run following the ICB.

F. Preparation Blanks are digested exactly as the samples. The same type of container, utilization of the same amount of reagents, and are assigned to the same digestion batch. The blanks are placed in sequence every twenty samples. Criteria is +/- 0.2 ug/L.

G. Laboratory Control sample. A blank solution is spiked at 1.0ug/L to check the spiking procedure and the digestion process. Acceptance criteria is based on statistical control charting for warning limits.

H. Spike Sample. 8mL of sample is spiked with 0.08mL of 0.1ppm Hg standard before addition of reagents or digestion. One spike is prepared every 20 samples of the same matrix. There are no criteria for terminating analysis.

I. Duplicate. One duplicate every twenty samples will be performed. The duplicate is prepared before addition of any reagents or digestion.

VII. SAFETY

A. Gloves, saftey glasses, and lab coat must be worn when performing any aspect of the mercury digestion or analysis process.

B. Mercury vapor is toxic. Caution should be taken during all phases of the digestion and analytical process. Care should be exercised so that mercury has no chance to be absorbed through the skin or inhaled.

C. The acids used to digest mercury are used full strength. Extreme care should be taken so that acid does not spill or splash. Transport samples and empty bottles on one of the 3 high concentration room spill carts. Transport acid using the 4 liter plastic carrying buckets.

D. Additional safety equipment includes mercury sponges, acid neutralization media, shoe and leg splash protection, a mercury scrubber, and face shield.

VIII. DISPOSAL REQUIREMENTS

A. Collect all waste acid, samples, and standards into 20 liter plastic carboys or similar vessels and transport to waste disposal when container is 3/4 full for pour-off into 55 gallon drums (lined with polyethylene).

B. The main disposal concern of mercury digestates is the corrosivity and toxicity characteristics of mercury. The content of the waste can be as high as 30% acid. Varying concentrations of mercury will be present in the digestates and will be determined by waste disposal charateristic procedures prior to release to a disposal company.

XI. REPORTING REQUIREMENTS

A. In addition to the accurate reporting and handling of raw data, there are records that need to be maintained for internal auditing purposes.

1. Before analysis is completed, record on the raw data the date of analysis, the analyst, the Mercury standard's source, lot number, and GP ID, the ICV's number, and GP ID, the LCSS's number and GP ID, a list of the cases included in the run, and the instrument upon which the analysis was performed. Note the source for the spike used in the matrix spike sample and % Recovery for the spike in the raw data.

2. Complete the Bench Sheet for Mercury with the following information: Instrument ID, Date of analysis, Analyst name and signature, Time analysis was initiated, case and SDG, work order numbers, sample sequence run, dilution factors and comments.

3. Complete the Instrument Use Log with the following information: Date, Method, Case, Analyst and Comments.

4. If maintenance or repair was required on the instrument, all relevent information must be recorded in the Maintenance Log. This Log will be maintained with all field service reports for each instrument.

Figure 1
Mercury Digestion Log

GP Environmental Services Mercury Digestion Log

Date of Digest: Method: Page No.: 251 of ___
Analyst: Filename: Document Control No.: GP138
Reviewed: Water Bath Temp: Holding times OK? Y / N

GP Workorder	Frac	Client ID	Matrix	SIZE mL, g	VOL (mL)	Spk.A. (mL)

Comments: Spiking Solution Conc:

Figure 2
Bench Sheet

BENCH SHEET
HG

95-07-175 115 104
95-07-133 95-07-181 07-097 07-148

Page 1

DATA FILE: AK72895
INSTRUMENT FILE: B:AK72895.PRN

CASE:
INSTRUMENT: PS200

SDG:
ANALYZED: 07/28/95

SEQ	LAB ID	CLIENT ID	MATRIX	DILUTION	SIZE	VOLUME	%SOLIDS	ANALYZED	
1	CALBLANK	S0	WATER	1.00	100.000	100.000	100.00	07/28/95	15:33:33
2	0.1 ppb	S0.1	WATER	1.00	100.000	100.000	100.00	07/28/95	15:41:51
3	0.5 ppb	S0.5	WATER	1.00	100.000	100.000	100.00	07/28/95	15:50:06
4	1.0 ppb	S1	WATER	1.00	100.000	100.000	100.00	07/28/95	15:58:24
5	2.0 ppb	S2	WATER	1.00	100.000	100.000	100.00	07/28/95	16:06:43
6	5.0 ppb	S5	WATER	1.00	100.000	100.000	100.00	07/28/95	16:15:01
7	ICV	ICV	WATER	1.00	100.000	100.000	100.00	07/28/95	17:12:04
8	ICB	ICB	WATER	1.00	100.000	100.000	100.00	07/28/95	17:14:48
9	CRA	CRA	WATER	1.00	100.000	100.000	100.00	07/28/95	17:35:03
10	PBW	PBW	WATER	1.00	100.000	100.000	100.00	07/28/95	17:37:44
11	PBW2	PBW2	WATER	1.00	100.000	100.000	100.00	07/28/95	17:40:25
12	LCSW	LCSW	Water	1.00	100.000	100.000	100.00	07/28/95	17:43:06
13	LCSW2	LCSW2	Water	1.00	100.000	100.000	100.00	07/28/95	17:45:47
14	9507175-02A	W-1(FILTERED)	WATER	1.00	100.000	100.000	100.00	07/28/95	17:48:28
15	9507175-02AD	W-1(FILTERED)D	WATER	1.00	100.000	100.000	100.00	07/28/95	17:51:09
16	9507175-02AS	W-1(FILTERED)S	WATER	1.00	100.000	100.000	100.00	07/28/95	17:53:50
17	9507115-04A	A4 MOVOC	WATER	1.00	100.000	100.000	100.00	07/28/95	17:56:31
18	9507115-04AD	A4 MOVOCD	WATER	1.00	100.000	100.000	100.00	07/28/95	17:59:12
19	Ck2	CCV1	Water	1.00	100.000	100.000	100.00	07/28/95	18:01:55
20	Ck3	CCB1	Water	1.00	100.000	100.000	100.00	07/28/95	18:04:38
21	9507115-04AS	A4 MOVOCS	WATER	1.00	100.000	100.000	100.00	07/28/95	18:07:20
22	9507115-08A	B4 MT.	WATER	1.00	100.000	100.000	100.00	07/28/95	18:10:01
23	9507115-12A	C4 LING.	WATER	1.00	100.000	100.000	100.00	07/28/95	18:12:40
24	9507104-01E	E15-GW20-00-004	WATER	1.00	100.000	100.000	100.00	07/28/95	18:15:19
25	9507104-01ED	E15-GW20-00-004D	WATER	1.00	100.000	100.000	100.00	07/28/95	18:17:58
26	9507104-01ES	E15-GW20-00-004S	WATER	1.00	100.000	100.000	100.00	07/28/95	18:20:37
27	9507104-02A	E15-GW20-00-005	WATER	1.00	100.000	100.000	100.00	07/28/95	18:23:16
28	9507104-03E	E15-GW20-00-002	WATER	1.00	100.000	100.000	100.00	07/28/95	18:25:55
29	9507104-04A	E15-GW20-00-003	WATER	1.00	100.000	100.000	100.00	07/28/95	18:28:34
30	9507104-06E	E15-GW20-00-006	WATER	1.00	100.000	100.000	100.00	07/28/95	18:31:14
31	Ck2	CCV2	Water	1.00	100.000	100.000	100.00	07/28/95	18:33:56
32	Ck3	CCB2	Water	1.00	100.000	100.000	100.00	07/28/95	18:36:39
33	9507104-07A	E15-GW20-00-007	WATER	1.00	100.000	100.000	100.00	07/28/95	18:39:20
34	9507104-08E	E15-GW20-00-008	WATER	1.00	100.000	100.000	100.00	07/28/95	18:42:00
35	9507104-09A	E15-GW20-00-009	WATER	1.00	100.000	100.000	100.00	07/28/95	18:44:39
36	9507104-10E	E15-GW20-00-010	WATER	1.00	100.000	100.000	100.00	07/28/95	18:47:16
37	9507104-11A	E15-GW20-00-011	WATER	1.00	100.000	100.000	100.00	07/28/95	18:49:53
38	9507133-01E	E15-SW01-00-038	WATER	1.00	100.000	100.000	100.00	07/28/95	18:52:31
39	9507133-01ED	E15-SW01-00-038D	WATER	1.00	100.000	100.000	100.00	07/28/95	18:55:09
40	9507133-01ES	E15-SW01-00-038S	WATER	1.00	100.000	100.000	100.00	07/28/95	18:57:48
41	9507133-02A	E15-SW01-00-039	WATER	1.00	100.000	100.000	100.00	07/28/95	19:00:27

A. Nicholas AK 7/30/95
Analyst / Date

SM 7/31/95
Lab Supervisor / Date

GP ENVIRONMENTAL SERVICES

Figure 3
Instrument Use Log

GP ENVIRONMENTAL SERVICES
MERCURY RUN LOG: PS200

DATE_____ STD SOURCE_____ WORK ORDER # / FRACTION
PROTOCOL_____ FOLDER_____ _____/_____
BATCH NAME_____ CHKSTD SRC _____ _____/_____
TEST OPTICS: SAMPLE_____ REF_____ _____/_____
RACK1 _____ RACK2_____ _____/_____
MAINTENANCE _____ _____/_____
ANALYST'S NAME _____ _____/_____
COMMENTS_____ _____/_____
_____/_____

DATE_____ STD SOURCE_____ WORK ORDER # / FRACTION
PROTOCOL_____ FOLDER_____ _____/_____
BATCH NAME_____ CHKSTD SRC _____ _____/_____
TEST OPTICS: SAMPLE_____ REF_____ _____/_____
RACK1 _____ RACK2_____ _____/_____
MAINTENANCE _____ _____/_____
ANALYST'S NAME_____ _____/_____
COMMENTS_____ _____/_____
_____/_____

DATE_____ STD SOURCE_____ WORK ORDER # / FRACTION
PROTOCOL_____ FOLDER_____ _____/_____
BATCH NAME_____ CHKSTD SRC _____ _____/_____
TEST OPTICS: SAMPLE_____ REF_____ _____/_____
RACK1 _____ RACK2_____ _____/_____
MAINTENANCE _____ _____/_____
ANALYST'S NAME_____ _____/_____
COMMENTS_____ _____/_____
_____/_____

Figure 4
Maintenance Log

Date

10-31-94. cleaned optical cell and optics. Found particles of permanganate in bottom ~~of~~ tube of cell. Instrument operational DM 11-8-

11-1-94. standards #1+2 (0, 0.1 ug/L) Reading negative values. Does not affect operation DM 11-

11-2-94. - called Leeman Labs Re negative values from 11-1-94. DM 11-2-94.

11-3-94. Dan Lon from Leeman labs called. Suggested the following:
- ~~Re~~ Reset adjusting screws on cell - ~~pull them~~ screw them ~~all~~ out and do TEST optics. Readings were: Sample 630 Ref 440
- Removed Right side of cell and Rotated quartz cell 180°
- Replaced cell and did ~~[illegible]~~ TEST optics - Sample = 730 Ref = 390.
- Screwed in bottom screw ~~½~~ mlf way and adjusted to: Sample = 444 Ref = 445.

(note: Tolerance for Test optic with screws backed up is ± ~~1.5~~ 150 mV.)

- Told to run standards to verify operation.

11-8-94. Gas leak detected on optical cell fitting for Reference side gas. ~~[illegible]~~. Attempted Repair with methylene chloride solvent. Reduced leak but a small leak is still present. calibrated instrument, instrument operational.

11-16-94. Cleaned out optical cell, cleaned mercury lamp, ~~[illegible]~~ cleaned quartz lenses, cleaned gas line leading from drying tube to cell. ~~[illegible]~~ DM 11-16-94. see 11-17-94.

11-17-94 ~~Noticed~~ problem: low absorbance observation. No gas reaching liquid-gas seperator source, determined that the inlet gas line was pinched during reinstallation of cell. Reinstalled cell, instrument operation. DM 11-17-94.

Figure 5

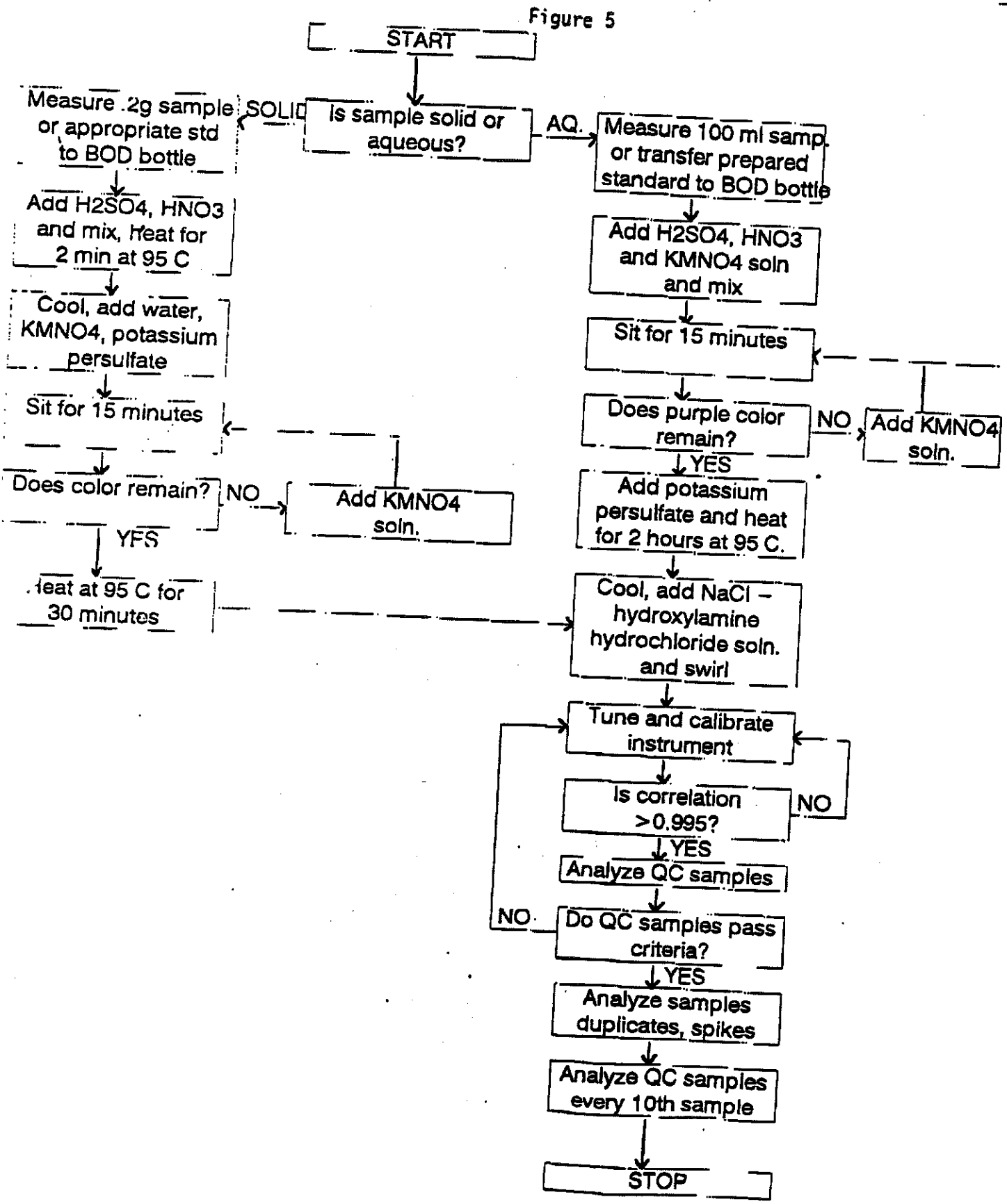
START
Is sample solid or aqueous?
SOLID
AQ.
Measure .2g sample or appropriate std to BOD bottle
Add H2SO4, HNO3 and mix, Heat for 2 min at 95 C
Cool, add water, KMNO4, potassium persulfate
Sit for 15 minutes
Does color remain?
NO
Add KMNO4 soln.
YES
Heat at 95 C for 30 minutes
Measure 100 ml samp or transfer prepared standard to BOD bottle
Add H2SO4, HNO3 and KMNO4 soln and mix
Sit for 15 minutes
Does purple color remain?
NO
Add KMNO4 soln.
YES
Add potassium persulfate and heat for 2 hours at 95 C.
Cool, add NaCl – hydroxylamine hydrochloride soln. and swirl
Tune and calibrate instrument
Is correlation >0.995?
NO
YES
Analyze QC samples
Do QC samples pass criteria?
NO
YES
Analyze samples duplicates, spikes
Analyze QC samples every 10th sample
STOP

Effective Date: July 1995
Version Number: 1.0
Initiated By :
Approved By :

SOP No.: 11.46

Title : Method For Total Cyanide Analysis In Water and Soil

Scope : The method detailed in this Standard Operating Procedure is for the analysis of water and soil samples for total cyanide as required by SW 846 method 9010A.

1.0 PURPOSE

The method detailed in this procedure is used to analyze water and soil samples for the presence of cyanide. Cyanide is defined as cyanide ion and complex cyanides converted to hydrocyanic acid (HCN) by reaction in a reflux system of a mineral acid in the presence of magnesium ion. The liberated HCN is absorbed in a scrubber containing NaOH solution and analyzed colorimetrically. The working range of the semi-automated spectrophotometric method is .005 to .200 mg/L. Higher level samples must be diluted to fall within the working range. Analysis must be performed within 12 days of sample receipt.

In the colorimetric measurement the cyanide is converted to cyanogen chloride, CNCl, by reaction with chloramine-T at a pH less than 8 without hydrolyzing to the cyanate. After the reaction is complete, color is formed on the addition of pyridine-barbituric acid reagent and measured at 578 nm.

2.0 REFERENCES

SW 846 - Method 9010

3.0 EQUIPMENT AND SUPPLIES

3.1 Reflux Distillation Apparatus consisting of:

- 1000 ml round bottom flask with inlet tube and provision for condenser.
- Inlet tube
- Cold finger condenser
- Cold finger jacket
- Absorber
- Absorber jacket
- Heating mantle
- Low vacuum source
- Condenser water source

- Fume hood
- Semi-automated Spectrophotometric Analysis Apparatus
- Beakers 250ml
- Stir bars, magnetic
- 25 ml Erlenmeyer flasks
- Eppendorf pipet
- Volumetric flasks of various sizes

3.2 Semi-automated Spectrophotometric Analysis Apparatus consisting of:

- Alpkem RFA or similar instrument; i.e., Technicon AA II system.
- Pump
- Cyanide manifold
- Colorimeter with 15 mm cells and 570 nm filter
- Recorder
- Plastic tubes for sampler
- Plastic sample cups, 4ml capacity

4.0 REAGENTS

Accuracy in the formulation of the reagents used in this method is of the utmost importance. Therefore the following requirements are necessary.

The water used for the preparation of all reagents (distillation and analysis) must be Type II or better.

Chemicals used in the formulation of the reagents must be ACS reagent grade.

Volumetric glassware used in the formulation of all reagents must be Class A.

4.1 Distillation Reagents

4.1.1 1.25 N NaOH. Dissolve 50 gram NaOH in deionized water, and dilute to 1 liter.

4.1.2 Sulfuric acid, concentrated.

4.1.3 Magnesium chloride solution: Dissolve 510 grams of $MgCl_2$ $6H_2O$ in deionized water and dilute to 1 liter.

4.1.4 Bismuth nitrate solution: Dissolve 30.0 grams of $Bi(NO_3)_3$ in 100 ml of deionized water. Stir while adding 250 ml of glacial acetic acid. Dilute to 1 liter.

4.1.5 Sulfamic acid solution: Dissolve 40 grams of sulfamic acid in deionized water and dilute to 1 liter.

4.2 Colorimetric Reagents

4.2.1 Chloramine-T solution: Dissolve 0.40 grams of Chloramine-T in deionized water and dilute to 100 ml. Prepare fresh daily.

4.2.2 Phosphate buffer: Dissolve 138 grams of NaH_2PO_4 H_2O in deionized water and dilute to 1 liter. Add 0.5 ml Brij-35 (see #6). This solution expires 28 days after formulation.

4.2.3 Pyridine-barbituric acid reagent: In a fume hood place 7.5 grams of barbituric acid in a 500 ml beaker. Rinse down the sides of the beaker with distilled water. Place the beaker on a magnetic stirrer and insert a stirring bar. While stirring the solution add 37.5 ml pyridine and 7.5 ml concentrated HCl. Add 300 ml more deionized water. Cover the beaker, and continue stirring until the barbituric acid has completely dissolved. Transfer solution to a 500 ml volumetric flask and dilute to volume. This solution expires 14 days after formulation.

4.2.4 0.25 N NaOH: Dissolve 10.0 grams NaOH in deionized water and dilute to 1 liter. Prepare fresh daily.

4.2.5 Stock Cyanide solution: Commercially available solutions are preferred for accuracy and safety reasons. Read and understand the MSDS for this material. Solutions are typically 1000 mg/L Cyanide.

Recommended Vendor: Banco; Anderson Laboratories, Inc., Fort Worth, Texas 76119.

4.2.6 Brij-35 solution: Brij-35 is an aqueous wetting agent usually found as a 30% solution. Brij-35 is a trademark of Atlas Chemical Industries, Inc. and is available through Fisher Scientific. The reagent for analysis is prepared using 0.5 ml Brij-35 and diluting to 500 ml with deionized water. Prepare fresh daily.

4.3 Calibration Verification Solution

4.3.1 ICV-6 Solution, obtained from EMSL-LV c/o Dr. Robert Newberry Phone No.: (702) 798-2167

5.0 PROCEDURE

5.1 Sample Preservation and Storage

5.1.1 Sample Preservation in the Presence of Chlorine
Oxidizing agents such as chlorine decompose most of the cyanides. Test a drop of the sample with potassium iodide starch test paper; a blue color indicates the need for treatment. Add ascorbic acid, a few crystals at a time, until a drop of the sample produces no color on the indicator paper. Then add an additional 0.6 gram of ascorbic acid for each liter of sample volume. Normally this procedure will be performed by persons collecting the samples in the field.

5.1.2 Sample Preservation

Samples are normally preserved in the field with NaOH to a pH > 12. Sample pH should be checked before analysis and must be greater than 12. If this is not the case notify the laboratory supervisor.

Samples must be stored at 4 ± 2°C.

5.2 Distillation Procedure

5.2.1 Set up the distillation apparatus as depicted in Figure 1. Place 500 ml of water sample (or 1-5g of soil), or an aliquot diluted to 500 ml in the 1 liter boiling flask. Add 50 ml of 1.25 N NaOH to the absorber jacket and insert the absorber to complete the assembly. Connect the inlet tube, condenser, and absorber stem to the flask. Place on the heating mantel and connect the absorber to the low vacuum source.

5.2.2 Start a slow stream of air entering the boiling flask at approximately 2 bubbles per second by using the needle valve. Monitor the flowrate and adjust as necessary as the flask begins to boil.

5.2.3 Using lead acetate paper, check the sample for the presence of sulfide. A positive result is indicated by a black color on the paper. If positive, treat the sample by adding 50 ml of bismuth nitrate solution through the air inlet tube. Mix for three minutes prior to addition of acid.

5.2.4 If samples are suspected to contain nitrate or nitrite, add 50 ml of sulfamic acid solution through the air inlet tube. Mix for three minutes prior to addition of acid.

5.2.5 Slowly add 25 ml concentrated sulfuric acid through the inlet tube. Rinse the tube with deionized water and allow to mix for 3 minutes. Add 20 ml magnesium chloride solution to the inlet tube and rinse the tube with deionized water.

5.2.6 Heat the solution to boiling, taking care to prevent the solution from backing up into the inlet tube. Reflux for 1 hour. Turn off heat and continue air flow for an additional 15 minutes. After cooling the flask, disconnect the absorber and close off the vacuum source.

5.2.7 Drain the solution from the absorber, rinse the jacket and dilute to 250 ml in a volumetric flask. Transfer solution to a clean 250 mL plastic bottle. Label the bottle with the information required in step 6 and store in the refrigerator for cyanide distillates (located in sample receiving) until time of analysis. Record all sample volumes, final volumes, client identifications, sample pH, case numbers, QC distilled, spike preparation, and any other treatments or comments in the cyanide distillation logbook.

5.2.8 Record all sample volumes, final volumes, client identifications, sample pH, case numbers, QC distilled, spike preparation, and any other treatments or comments in the Cyanide Distillation Logbook (an example page is presented as Figure 2).

5.3 Semi-automated Spectrophotometric Analysis

5.3.1 Turn on the regulated power, light source, pump power, and auto sampler power and allow to warm up while the manifold is being set up.

5.3.2 Set up the manifold as shown in Figure 3. Prepare fresh 0.25N NaOH and fresh Brij-35 solution. Filter chloramine-T, buffer, and pyridine-barbituric acid reagent into 125 ml Erlenmeyer flasks. Cover the pyridine reagent to minimize inhalation. Secure the pump tubes across the rollers and clamp down the platens. Place reagent lines in the Brij-35 solution and pump solution through the manifold to purge the system.

5.3.3 Place reagent lines into their respective reagents and pump (catching the waste in a waste bottle mentioned in Section VIII, Disposal Requirements) for at least 20 minutes. Set the photometer reference voltage to approximately 5.00 ± 0.05 volts using the sample/reference/absorbance knob in the reference position and turning the reference potentiometer. Similarly set the sample voltage to approximately 5.00

volts. Set absorbance to .5 and damp to 1. Switch the sample/ reference/ absorbance knob to absorbance and adjust to .02 by turning the reference potentiometer. This will be the baseline absorbance. Turn on the recorder, set to 1 V VAR 30 cm/h and allow to warm-up. Verify the absorbance which still should be .02; adjust if necessary. Make certain the baseline is very stable before attempting to run any samples. Note: The sample matrix (0.25N NaOH Distillate) must match the wash (0.25N NaOH).

5.3.4 With an Epprendorf pipet and 10 ml volumetric flask and prepare standards by diluting .1 ml of a 1,000 mg/L stock solution to 10 ml with .25 N NaOH to prepare the standard curve

(ml 10mg/L)/(10 ml)	conc ug/L (ppb)
.200	200
.100	100
.050	50
.020	20
.005	5
.000	0

5.3.5 Once the baseline absorbance has stabilized place the standards in plastic sample cups and arrange them in descending order, i.e., highest to lowest. Use 3 high standards, two of which will be used to set the recorder scale. The third will be used as part of the regression calculation. After the standards are loaded the ICV (Initial Calibration Verification) solution and ICB (Initial Calibration Blank) follow. The ICV is supplied in concentrated form and must be distilled prior to analysis. At this writing the current cyanide ICV is ICV-6 which also serves as Laboratory Calibration Standard (LCS). ICV-6 has a true value of 94 ppb. Continue loading samples starting with the preparation blank, sample, duplicate, distilled spike, etc. Every 10 samples a Continuing Calibration Verification (CCV) of ICV-6 and a Continuing Calibration Blank (CCB) must be run. The last two samples of the run in the sample tray are CCV and CCB.

5.3.6 If a drop of distillate on lead acetate test paper indicates the presence of sulfides, treat 25 ml more of the sample than required for cyanide determination with powdered cadmium carbonate and precipitate cadmium sulfide. Continue precipitation until a drop of sample does not color the test paper. Filter the sample and use filtrate for analysis. NOTE: Sulfides should be removed prior to preservation with

NaOH in the field and thus it is the sampler's responsibility. In the event of a conflict, notify the laboratory supervisor.

5.3.7 Before starting the sampler, set the baseline on the recorder at 5 divisions using the baseline knob on the recorder. Run the samples using the auto sampler: 34 sample/16 wash. As the standards appear on the chart, set the high standard to approximately 95% full scale (95 divisions) using the VAR knob located above the chart voltage dial. Plot peak height vs. standard concentration and perform a linear regression analysis to determine sample concentration.

5.3.8 $$\text{Spike Recovery} = \frac{(\text{Spiked sample ppb} - \text{Sample ppb})}{\text{Spike True Value}} \times 100$$

Limits: ± 25%

5.3.9 $$\text{ICV-6 Recovery} = \frac{(\text{Found Value})}{(\text{True Value})} \times 100$$

Limits: ± 15%

5.3.10 $$\text{Sample RPD} = \frac{(\text{Difference of ppb})}{(\text{Average ppb})} \times 100$$

Limits: ± 10%

5.3.11 When the analysis is completed remove the reagent lines from the reagents and place them in the Brij-35 solution used for start-up and pump the solution for 20 minutes. Stop the pump by unclamping the platens and removing them. Unsecure the pump tubes from across the rollers to prevent unnecessary stretching. Turn off the light source, regulated power, pump power, auto sampler, and recorder. Remove the reagent lines from the Brij-35 solution and allow to drain into a beaker.

5.3.12 Troubleshooting

Proper maintenance is the best prevention of trouble. Check the pump tubes daily for wear. Worn pump tubes will cause noisy baselines and asymmetrical peaks. Wipe the pump rollers daily with a tissue to remove dirt and residue. Reagents are stable for at least 1 month, however pyridine-barbituric acid may precipitate and lose effectiveness in color development. Coloramine-T reagent may also lose potency after 2 weeks and may cause some instability. In

any case, prepare fresh reagents when necessary. Samples that contain high levels of cyanide (>10 ppm) may contaminate the manifold and the flowcell. To combat this problem after sample dilution, purge the manifold with Brij-35 solution for 30 minutes and reestablish baseline equilibrium as stated in the procedure section of this SOP. In addition, it may be necessary to flush the flowcell to dislodge a particle of dust and/or physical sample contaminant.

6.0 QUALITY CONTROL

6.1 Preparation blanks, duplicates, and matrix spikes must be distilled and analyzed for every 20 or fewer samples of each sample matrix in the sample delivery group.

6.2 The spike level for cyanide is 100 ppb for both soil and water matrices and is prepared from the cyanide stock solution used to make calibration standards. The spike must be distilled.

6.3 If the spike recovery is outside the control limit an analytical post digested spike must be run. The concentration of this spike must be twice the sample level or twice the contract required detection limit whichever is greater.

6.4 If the preparation blank is higher than detection limit and/or the duplicate limit is out of control, the entire sample delivery group must be redistilled and reanalyzed. Similarly, if the ICV-6 fails, the samples which appear before it must be reanalyzed.

7.0 SAFETY

7.1 Wear safety glasses, lab coat, and gloves at all times. Wash hands well after removing gloves.

7.2 Acid is the greatest potential hazard. Keep all samples and distillates from any acid source which may liberate HCN.

7.3 Pyridine is aromatic and poses potential health risks. Use fume hoods and keep the solution covered at all times. Refer to the Material Safety Data Sheets (MSDSs) for all reagents used.

7.4 NaOH is caustic and must be handled with extreme care. The use of gloves, safety glasses and a laboratory apron is required when working with concentrated solutions.

8.0 DISPOSAL REQUIREMENTS

8.1 Collect the flowcell waste in a 1 liter amber glass bottle. When full, transfer to a 4 liter used solvent bottle. When this bottle is full, contact the Hazardous Waste Coordinator for further instruction.

8.2 Label the waste bottle: Cyanide waste; contains pyridine. Method 335.2 Semi-automated spectrophotometric analysis.

9.0 REPORTING REQUIREMENTS

9.1 Label each peak with client I.D., the time it appeared, and the peak height in mm.

9.2 Label the standards with concentration and stock source lot number.

9.3 Label the top of the stripchart with analyte, case, date, and analyst.

9.4 Attach raw data in cyanide logbook on the page following the distillation record.

9.5 Place the above mentioned data into case file for data entry into Smartlog CLP software package.

Figure 1

TOTAL CYANIDE

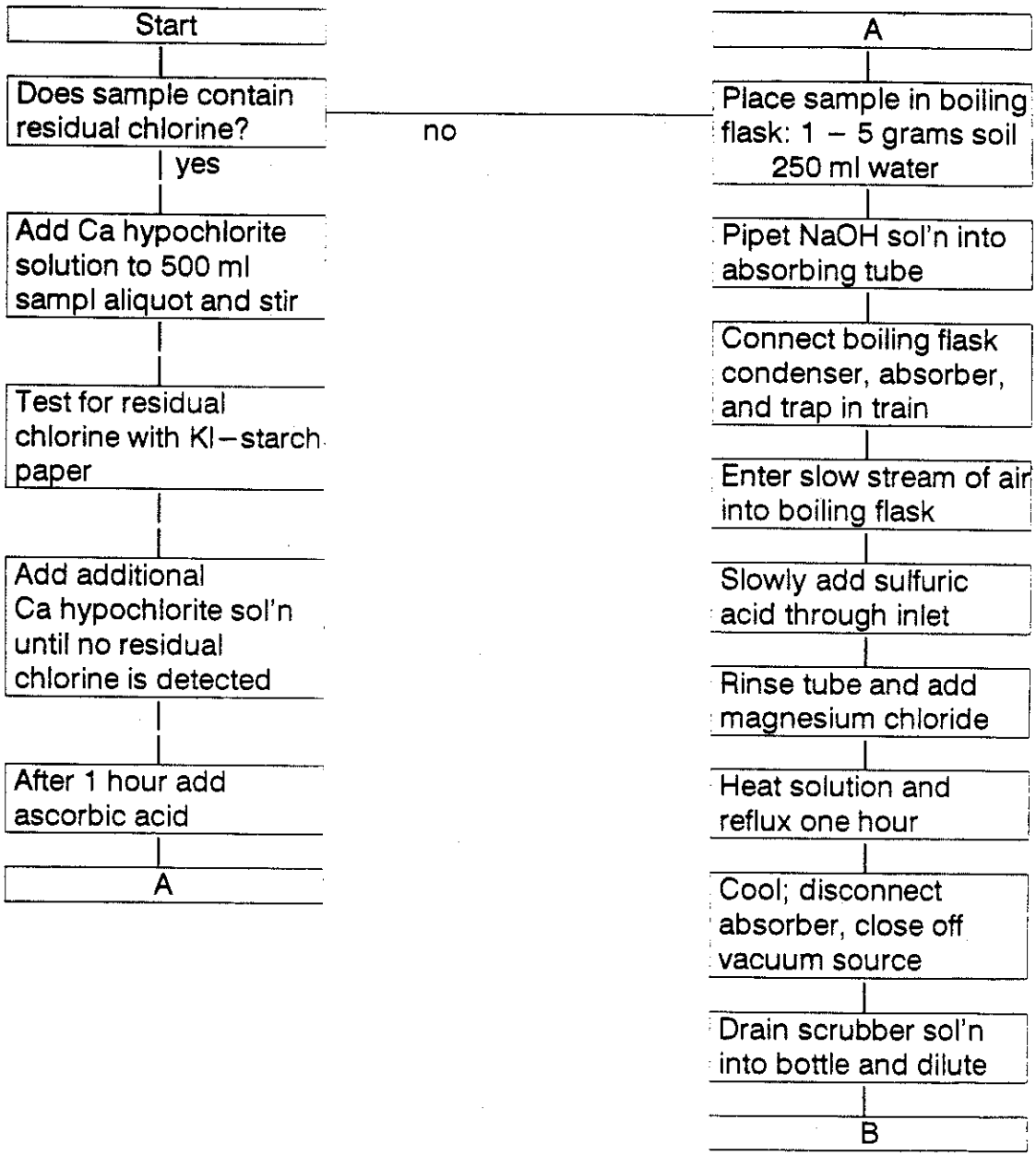

Figure 2

TOTAL CYANIDE
cont.

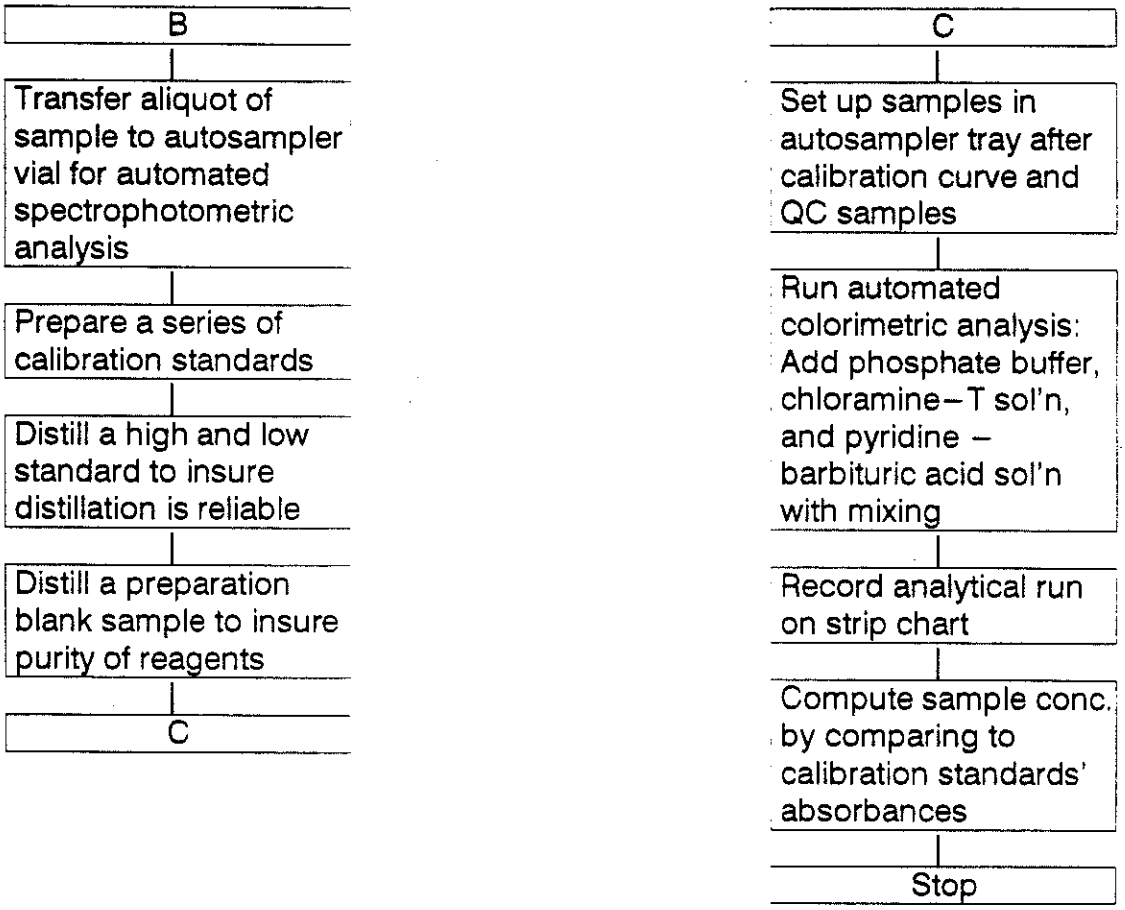

Effective Date: July 1995
Version Number: 1.0
Initiated By :
Approved By :

SOP No.: 11.47

Title : Analysis of Water and Soils for Sulfide According to MCAWW Method 376.1 (titrimetric)

Scope : This Standard Operating Procedure describes the method for determination of sulfide for water and soil samples as required by MCAWW Method 376.1 (Titrimetric)

1.0 PURPOSE

This procedure describes the methodology used to determine the sulfide content of samples according to the method described in the Methods for Chemical Analysis of Water and Wastes (MCAWW), Method 376.1 (Titrimetric). The methodology is applicable to drinking, surface, and saline waters, domestic and industrial washes and soil and sediment samples.

2.0 REFERENCES

Methods for Chemical Analysis of Water and Wastes (MCAWW), EPA-600/4-82-055, Method 376.1 (Titrimetric)

3.0. EQUIPMENT AND SUPPLIES

- 10 ml buret, accurate to 0.25 ml
- 125 ml glass Erlenmeyer flask or beaker
- Electronic stir plate and magnetic stir bar

4.0 REAGENTS

6 N HCL (1:1)
Standard iodine solution, 0.0250 N
Standard sodium thiosulfate solution, 0.0250 N
Starch indicator

5.0 PROCEDURE

5.1 Sample holding time and preservation

Water samples which require sulfide analysis must be analyzed within 7 days of collection if zinc acetate is added as a preservative. Unpreserved samples must be analyzed immediately. Soil samples should be extracted within 7 days and the extracts analyzed immediately.

5.2 Standardization of sodium thiosulfate titrant

Add 5.0 ml of the 0.0250 N iodine solution to 20 ml of laboratory pure water. Acidify by adding 2.0 ml of 6 N HCl. Add 1.0 ml of starch indicator to form a blue color. Continue to titrate until the blue color disappears.

Adjust the concentration of the titrant until 5.0 ml of titrant is required to titrate 5.0 ml of iodine.

5.3 Sample analysis

Add 5.0 ml of iodine solution to 20 ml of sample. Titrate as above, with standardized sodium thiosulfate solution. Record the volume of titrant used.

NOTE: If 5.0 ml of iodine does not produce a yellow color in the sample, add additional 5.0 ml increments of iodine solution until color is seen. Record the volume of iodine solution added.

5.4 Soil sample extraction

Extract sulfide from soil samples by shaking 1.0 g to 2.0 g of sample in 50 ml of a dilute sodium hydroxide solution for 30 minutes. Filter the extract through Whattman grade 42 filter paper and analyzed immediately, as above.

5.5 Calculation

1.0 ml of 0.0250 N iodine solution reacts with 0.4 mg of sulfide present in the titration vessel:

$$\text{sulfide, mg/L} = \frac{400\ (A - B)}{\text{ml sample}}$$

where: A = ml of iodine solution added
B = ml of titrant used

6.0 QUALITY CONTROL

6.1 Because of the volatile nature of sulfide, no stable QC is available.

6.2 Control blanks will be analyzed at the beginning of the analysis, and continuing after every ten samples, as well as at the end of the analysis.

6.3 Duplicate titrations will be performed on 5% of the samples analyzed.

7.0 SAFETY

7.1 Care should be taken when handling reagents and samples.

Sulfide Analysis

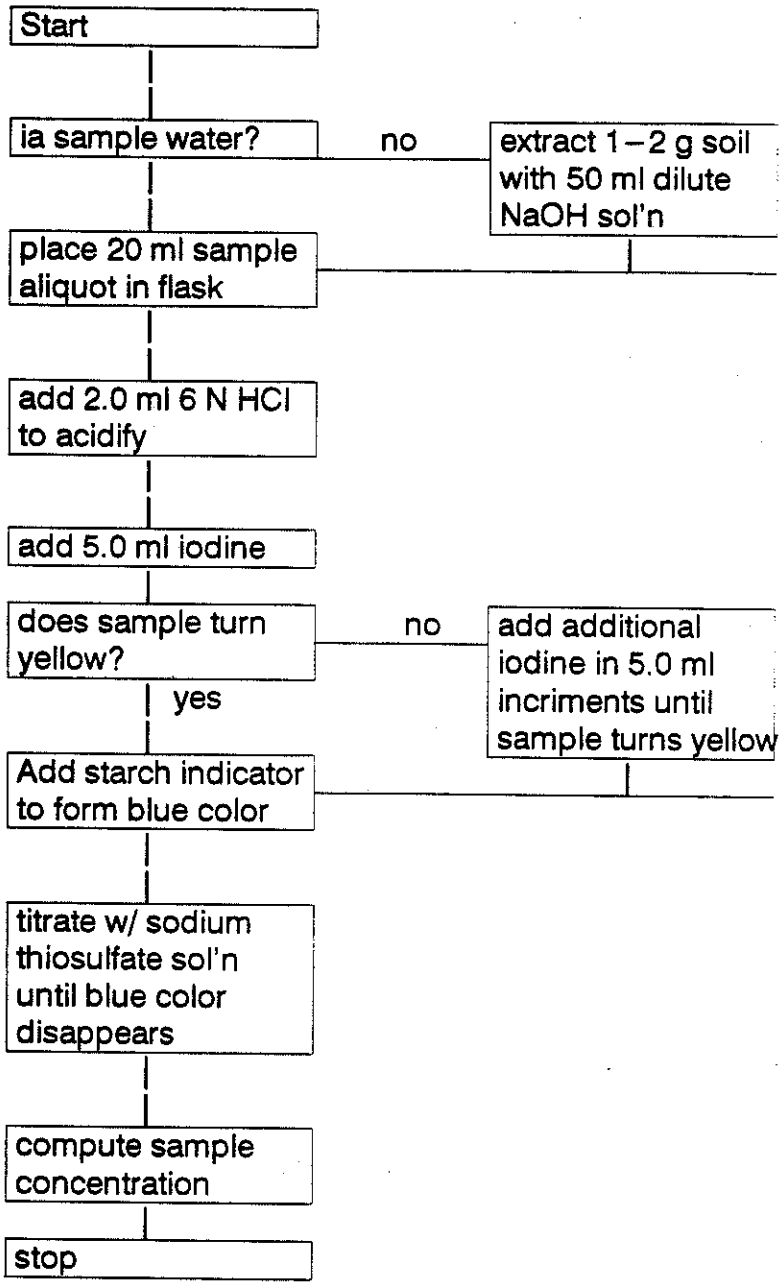

1.0 SCOPE AND APPLICATION

1.1 This SOP describes the method which is applicable for th extraction and cleanup of tetra-, penta-, hexa-, hepta-, an octachlorinated dibenzo-p-dioxins (PCDD's) and furans (PCDF's from complex industrial waste samples (including sludges, stil bottoms, fly ash, soil, and water) by SW-846 Method 8280.

1.2 Additional extract cleanup techniques beyond those described i SW-846 are included as alternatives for sample extracts which ar not amenable to cleanup using SW-846 procedures.

1.3 This SOP is applicable to the following A-Types:

1 AP9/PCDX, 2 AP9/PCDX, 1 PCDX/8280, 2 PCDX/8280, 7 MSL/PCDK, 1 TCDD/2378, 2 TCDD/2378.

1.4 Because of the extreme toxicity of these compounds, the lab technician must take necessary precautions to prevent exposure to himself, or to others, of materials known or believed to certain PCDD's or PCDF's. Detailed safety procedures are outlined in section 4.0. Reference the ETC Safety Manual for additional safety information.

2.0 SUMMARY OF METHOD

2.1 This SOP describes matrix specific extraction and cleanup procedures for polychlorinated dibenzo-p-dioxins (dioxins) and polychlorinated dibenzofurans (furans) in complex environmental samples. Solvent extraction procedures are detailed for sludge, fuel oil, still bottoms, fly ash, soil, and water using reflux extraction, soxhlet extraction, jar shaking, and liquid/liquid separatory funnel extraction. Specific extract cleanup procedures including acid and basic extract washing, basic/neutral/acidic silica gel chromatography, alumina liquid chromatography, and carbon column liquid chromatography, are described for various "interferents" which may be co-extracted from the sample.

2.2 Method selection is based on the analysts judgement of matrix type and the constituency of co-extracted interferents.

3.0 INTERFERENCES

3.1 Solvents, reagents, glassware and other sample processing hardware may yield discrete artifacts and/or elevated baselines which may cause misinterpretation of chromatographic date. All these materials must be demonstrated to be free from interferents under the conditions of analysis by running laboratory method blanks.

3.2 The use of high purity reagents and solvents help to minimi: interference problems. Purification of solvents by distillatic in all glass systems may be required.

3.3 Interferents co-extracted from the sample will vary considerabl from source to source, depending upon the industrial proces being sampled. PCDD's and PCDF's are often associated with othe interfering chlorinated compounds such as polychlorinate biphenyls (PCB's) and polychlorinated diphenyl ethers which ma be found at concentrations several orders of magnitude highe than that of the analytes of interest.

3.4 Aqueous samples cannot be aliquoted from sample containers. Th entire sample must be used and the sample container washed/rinse out with the extracting solvent.

4.0 SAFETY

4.1 Material Safety Data Sheets (MSDS) are available for the chemicals used in the laboratory. All personnel who handle chemicals must know where this information is maintained and must be familiar with the MSDS information.

4.2 All personnel must have attended safety training prior to performing operations in the laboratory in accordance with the laboratory Chemical Hygiene Plan (CHP) as per 29 CFR.

4.3 Any individual who enters a posted area of the laboratory must wear safety glasses with side shields.

4.4 Any individual who handles samples and/or chemicals must wear a laboratory coat and the appropriate gloves for the operation being performed.

4.5 All laboratory areas must be maintained in a neat and orderly fashion. Good housekeeping practices must be employed throughout the laboratory. Laboratory work surfaces, equipment, and instruments must be kept free of residual chemical and/or sample contamination.

4.6 Human Toxicology

4.6.1 The human toxicology of PCDD/PCDF is not well defined at present, although the 2,3,7,8-TCDD is a solid at room temperature, and has a relatively low vapor pressure. The solubility of this compound in water is only about 200 part-per-trillion, but the solubility in various organic solvents ranges from 0.001 percent to 0.14 percent.

4.6.2 On the basis of the available toxicological and physica property data and TCDD, this compound, as well as th other PCDD and PCDF, should be handled only by highl trained personnel who are thoroughly versed in th appropriate procedures, and who understand the associate risks.

4.7 Safety Equipment

4.7.1 Safe Lab Practice

PCDD/PCDF and samples containing these are handled using essentially the same techniques as those employed in handling any contaminated environmental sample. Well-ventilated, controlled-access laboratories are required, and laboratory personnel entering these laboratories should wear appropriate safety clothing.

4.7.2 Protective Clothing

Eye protection equipment must be worn at all times while working in the analytical laboratory with PCDD/PCDF. Various types of gloves can be used by personnel, depending upon the analytical operation being accomplished. Latex gloves are generally utilized, when handling samples.

4.7.3 Other Lab Safeguards

Benches and other work surfaces in the laboratory should be covered with plastic-backed absorbent paper during all analytical processing.

4.8 Disposal

All laboratory ware, safety clothing, and other items potentially contaminated with PCDD and PCDF in the course of analyses must be carefully secured and subjected to proper disposal. Refer to ETC SOP for the Disposal of Laboratory Wastes number ED201001 for additional information.

5.0 **APPARATUS AND MATERIALS**

5.1 Bottle caps--threaded to screw onto the sample bottles. Caps must be lined with Teflon.

5.2 Water bath--heated, with concentric ring cover, capable of temperature control (±2°C). The bath should be used in a hood.

5.3 Pipets-Disposable, Pasteur, Borosilicate glass; 9 inch.

5.3.1 Pipet, disposable, serological 10 ml.

5.4 Amber glass bottle (250 ml Teflon-lined screw-cap).

5.5 Reacti-vial 2 ml, amber glass. Silanized prior to use.

5.6 500 ml Erlenmeyer flask fitted with Teflon stoppers.

5.7 Wrist Action Shaker.

5.8 125 ml and 2 L Separatory Funnels.

5.9 500 ml Kuderna-Danish fitted with a 25 ml concentrator tube and 3 ball Snyder column.

5.10 Teflon boiling chips. Wash with hexane prior to use.

5.11 300 mm x 10.5 mm glass chromatographic column fitted with Teflon stopcock.

5.12 50 ml conical concentrator tubes.

5.13 Adapters for concentrator tubes (14/20 to 19/22).

5.14 Nitrogen blowdown apparatus (N-Evap reg. trademark). Teflon tubing connection to trap and gas regulator is required.

5.15 Microflex conical vials .01 ml.

5.16 Filter paper. Glass fiber filters or glass wool plugs are also recommended.

5.17 Solvent reservoir (125 ml) Kontes: Special order item. 12.5 cm diameter, compatible with gravity carbon column.

5.18 250 ml beakers.

5.19 Disposable aluminum weighing boats.

5.20 100 ul gas tight syringes.

5.21 Spatula (stainless steel).

5.22 Waste Vessel (250 ml or larger).

5.23 Glass wool.

5.24 Taping rod (glass, stainless steel or teflon).

5.25 Aluminum foil.

5.26 Red rubber bulbs (1.0 ml).

5.27 Centrifuge tube racks.

5.28 Crimp seal vials 100 ul (microvials).

5.29 Crimp seal caps 11 mm; teflon-lined.

5.30 Crimper 11 mm.

5.31 1000 ul graduated cylinder (Nalgene).

5.32 Soxhlet Extractor

5.33 Condenser (to fit Soxhlet Extractor body)

5.34 Boiling Flask: (500 ml; flat-bottom)

5.35 Heating Mantle set up:
- Heating Mantle
- Heating Mantle Support
- Rheostat
- Multiple Outlet

5.36 Carborundum Boiling Stones

5.37 Cellulose Thimbles

5.38 Spatula (stainless steel)

5.39 Weighing Boats (aluminum)

5.40 Tongs or tweezers

6.0 REAGENTS AND STANDARDS

6.1 PCDD/PCDF Standards

Prepare stock standards in a glovebox using concentrates or neat materials. The stock solutions (50 ppm) are stored in the dark at 4°C, and then checked frequently for signs of degradation or evaporation especially just prior to the preparation of working standards. Reference ETC SOP number EX600600 for the Preparation of Standard Solutions for PCDD/PCDF Analysis by SW-846.

6.1.1 PCDX Internal Standard Spiking Solution (SP2).

Compound	Concentration (ug/ml)
$^{13}C_{12}$2,3,7,8-TCDD	0.5
$^{13}C_{12}$1,2,3,6,7,8-HXCDD	0.5
$^{13}C_{12}$OCDD	1.0
$^{13}C_{12}$2,3,7,8-TCDF	0.5
$^{13}C_{12}$1,2,3,4,6,7,8-HpCDF	1.0

6.1.2 PCDX Recovery Standard (RSTD).

Compound	Concentration (ug/ml)
$^{13}C_{12}$1234-TCDD	10
$^{13}C_{12}$123789-HxCDD	10

6.1.3 PCDX Blank and Matrix Spiking Solution (SP1).

Compound	Concentration (ug/ml)
2,3,7,8-TCDD	0.5
1,2,3,7,8-PeCDD	0.5
1,2,3,4,7,8-HxCDD	0.5
1,2,3,4,6,7,8-HoCDD	0.5
1,2,3,6,7,8-OCDD	1.0
2,3,7,8-TCDF	0.5
1,2,3,7,8-PeCDF	0.5
1,2,3,4,7,8-HxCDF	0.5
1,2,3,4,6,7,8,9-OCDF	0.5
$^{13}C_{12}$ 2,3,7,8-TCDD	0.5
$^{13}C_{12}$ 1,2,3,6,7,8-HXCDD	0.5
$^{13}C_{12}$ - OCDD	1.0
$^{13}C_{12}$ 2,3,7,8-TCDF	0.5
$^{13}C_{12}$ 1,2,3,4,6,7,8-HpCDF	1.0

6.4 Reagents

6.4.1 Methylene chloride, High purity; distilled in glass.

6.4.2 Activated anhydrous sodium sulfate (Na2So4)

6.4.3 Methanol High purity; distilled in glass.

6.4.4 Hexane; (U.V. grade).

6.4.5 Neutral silica gel (activated) 60/200 mesh store in oven at 130°C.

6.4.6 Acidic Sulfuric Acid (H2SO4) Modified silica gel.

6.4.7 Basic Sodium Hydroxide (NaOH) Modified silica gel.

6.4.8 Super Woelm Alumina I (Neutral) 80/200 mesh stored in a sealed container at room temperature in a desiccator over self-indicating silica gel.

6.4.9 8% Methylene Chloride/Hexane (V/V) blend, high purity; distilled in glass.

6.4.10 60% Methylene Chloride/Hexane (V/V) blend, high purity; distilled in glass.

6.4.11 AX-21 Activated Carbon Mix.

6.4.12 50% (V/V) Methylene Chloride/Cyclohexane (V/V) blend, high purity; distilled in glass.

6.4.13 75/20/5 % (V/V/V) methylene chloride/Methanol/benzene, blend, high purity; distilled in glass.

6.4.14 Zero Grade Nitrogen.

6.4.15 Dodecane (Fluka Chemicals).

6.4.16 Toluene, high purity; distilled in glass

7.0 QUALITY CONTROL

7.1 Before processing any samples, the analyst should demonstrate through the analysis of a reagent blank, that interferences from the analytical system, glassware and reagents are under control. Each time a set of samples is extracted or there is a change in reagents, a reagent blank should be processed as a safeguard against chronic laboratory contamination. The blank samples should be carried through all stages of the sample preparation and measurement steps.

7.2 For each analytical batch (up to 20 samples), a reagent blank, matrix spike and matrix spike duplicate/duplicate must be analyzed (the frequency of the spikes may be different for different monitoring programs). The blank and spiked samples must be carried through all stages of the sample preparation and measurement steps.

7.3 Accuracy and Precision

7.3.1 Recovery from a blank spike for all analytes must be within 60% to 140%.

7.3.2 Recovery of internal standards in all samples must be within 40% and 120%.

7.3.3 Recovery from matrix spike for all analytes must b within 60% and 140%.

7.3.4 Replication of duplicate samples must be less than 50 RPD for 2,3,7,8-TCDD.

7.4 Summary of QC Sample Spiking Solution Volumes

7.4.1 Method Blank - 100 ul ISTD spike (SP2).

7.4.2 Blank Spike - 100 ul native (SP1)/ISTD spike (SP2).

7.4.3 Matrix Spike - 100 ul native (SP1)/ISTD spike (SP2).

7.4.4 Matrix Spike Duplicate - 100 ul native (SP1)/ISTD spike (SP2).

8.0 SAMPLE PRESERVATION AND HANDLING

8.1 All samples must be stored at 4°C and extracted within 30 days and completely analyzed within 45 days of collection.

9.0 SAMPLE PREPARATION AND EXTRACT CLEANUP

9.1 Extraction Procedures

9.1.1 Sludge/Fuel Oil

9.1.1.1. Extract aqueous sludge samples by refluxing a sample (e.g. 2. g) with 50 ml of toluene (benzene) in a 125 ml flask fitted with a Dean-Stark water separator.

9.1.1.2. Continue refluxing the sample until all the water has been removed. Cool the sample, filter the toluene extract through a fiber filter, or equivalent, into a 100 ml round bottom flask. Rinse the filter with 10 ml of toluene, combine the extract and rinsate.

9.1.1.3. Concentrate the combined solution to near dryness using a rotary evaporator at 50°C. Use of an inert gas to concentrate the extract is also permitted. Proceed with Step 9.2.1.

9.1.2 Still Bottoms

9.1.2.1. Extract still bottom samples by mixing a sampl (e.g., 1.0 ml of toluene (benzene) in a smal beaker and filtering the solution through glass fiber filter (or equivalent) into a 5 ml round bottom flask.

9.1.2.2. Rinse the beaker and filter with 10 ml o toluene. Concentrate the combined toluen solution to near dryness using a rotar evaporator at 50°C while connected to a wate aspirator. Proceed with Step 9.1.3.4.

9.1.3 Fly Ash. Any solid sample which has a high carbor content or cannot be extracted using the jar shake approach.

9.1.3.1. Place an appropriately labelled aluminum weighing boat on a calibrated top loading balance, and tare the balance.

9.1.3.2. Accurately weigh approximately 10.0 g of sample into the pan. Record the sample weight to three significant figures on the laboratory chronicle.

NOTE: QC blanks and blank spikes will consist solely of sodium sulfate.

9.1.3.3. Thoroughly mix the 10 gram sample and an equivalent amount of anhydrous sodium sulfate using a spatula and transfer the mix to a cellulose extraction thimble. Place the thimble into an appropriately labelled soxhlet apparatus that has been charged with 250 ml of toluene and contains 8-10 boiling stones in the reservoir.

9.1.3.4. Extract the samples for a minimum of 16 hours at a 3-cycle per hour reflux rate.

9.1.3.5. Allow the soxhlet apparatus to cool completely before removing from heating set-up.

9.1.3.6. Tilt soxhlet set-up to drain any residual toluene from extractor body. Allow any toluene in extractor body to separate from sample and repeat until no more toluene can be withdrawn.

9.1.3.7. Filter the toluene extract through a glas filter paper into a 500 ml round bottom flask Rinse the filter with 10 ml of toluene.

9.1.3.8. Concentrate the combined toluene solution t near dryness using a rotary evaporator at 50°C.

9.1.3.9. Transfer the residue to a 120 ml separator funnel using 15 ml of hexane. Rinse the flask with two 5 ml aliquots of hexane and add the rinses to the funnel. Shake 2 min with 50 ml of 5% NaCl solution, discard the aqueous layer and proceed with Step 9.2.

9.1.4 Soil

9.1.4.1. Extract soil samples by placing the sample (e.g. 10 g) and an equivalent amount of anhydrous sodium sulfate in a 500 ml Erlenmeyer flask fitted with a Teflon stopper.

9.1.4.2. Add 20 ml of methanol and 80 ml of petroleum ether, in that order, to the flask. Shake on a wrist action shaker for two hours. The solid portion of sample should mix freely. If a small soil aliquot is used, scale down the amount of methanol proportionally.

9.1.4.3. Filter the extract from Paragraph 9.1.4.2 through a glass funnel fitted with an 18.5cm Whatman ashless glass fiber filter and filled with anhydrous sodium sulfate into a 500 ml Kuderna-Danish (KD) concentrator fitted with a 10 ml concentrator tube.

9.1.4.4. Add 50 ml of petroleum either to the Erlenmeyer flask, re-stopper and flask and swirl the sample gently, remove the stopper carefully and decant the solvent through the funnel as above. Repeat this procedure with two additional 50 ml aliquots of petroleum ether. Wash the sodium sulfate in the funnel with two additional 5 ml portions of petroleum ether.

9.1.4.5. Add a Teflon or PFTE boiling chip and a three-ball Snyder column to the KD flask. Concentrate in a 70°C water bath to an apparent volume of 10 ml. Remove the apparatus from the water bath and allow it to cool for 5 min.

9.1.4.6. Add 50 ml of hexane and a new boiling chip t the KD flask. Concentrate in a water bath t an apparent volume of 10 ml. Remove th apparatus from the water bath and allow to coo for 5 min.

9.1.4.7. Remove and invert the Snyder column and rins it down into the KD with two 1-ml portions o hexane. Decant the contents of the KD an concentrator tube into a 125-ml separator funnel. Rinse the KD with two additional 5-m portions of hexane, combine. Proceed with Ste 9.3.

9.1.5 Water

9.1.5.1. Mark the water meniscus on the side of the 1-L sample bottle for later determination of the exact sample volume. Pour the entire sample (approximately 1-L) into a 2-L separatory funnel. Proceed with Step 9.1.5.2.

9.1.5.1.1. A continuous liquid-liquid extractor may be used in place of a separatory funnel when experience with a sample from a given source indicates that a serious emulsion problem will result or an emulsion is encountered using a separatory funnel. Add 60 ml of methylene chloride to the sample bottle, seal, and shake for 30 sec to rinse the inner surface. Transfer the solvent to the extractor. Repeat the sample bottle rinse with an additional 50- to 100-ml portion of methylene chloride and add the rinse to the extractor. Add 200 to 500 ml of methylene chloride to the distilling flask; add sufficient reagent water to ensure proper operation, and extract for 24 hr. Allow to cool, then detach the distilling flask. Dry and concentrate the extract as described in Paragraphs 9.1.4.5 and 9.1.5.3. Proceed with Paragraph 9.1.5.4.

9.1.5.2 Add 60 ml methylene chloride to the sample bottle, seal and shake 30 sec to rinse the inner surface. Transfer the solvent to the separatory funnel and extract the sample by shaking the funnel for 2 min with periodic venting. Allow the organic layer to separate

from the water phase for a minimum of 10 min. If the emulsion interface between layers is more than one-third the volume of the solvent layer, the analyst must employ mechanical techniques to complete the phase separation. Collect the methylene chloride (3 x 60 ml) directly into a 500-ml Kuderna-Danish concentrator (mounted with a 10-ml concentrator tube) by passing the sample extracts through a filter funnel fitted with an 18.5cm Whatman ashless glass fiber filter and packed with a glass wool plug and 5 9 of anhydrous sodium sulfate. After the third extraction, rinse the sodium sulfate with an additional 30 ml of methylene chloride to ensure quantitative transfer.

9.1.5.3 Attach a Snyder column and concentrate the extract on a water bath until the apparent volume of the liquid reaches 5 ml. Remove the K-D apparatus and allow it to drain and cool for at least 10 min. Remove the Snyder column, add 100 ml hexane, re-attach the Snyder column and concentrate to approximately 5 ml. Add a new boiling chip to the K-D apparatus before proceeding with the second concentration step.

Rinse the flask and the lower joint with 2 x 5 ml hexane and combine rinses with extract to five a final volume of about 15 ml.

9.1.5.4 Determine the original sample volume by refilling the sample bottle to the mark and transferring the liquid to a 1,000-ml graduated cylinder. Record the sample volume to the nearest 5 ml. Proceed with Paragraph 9.2.

9.1.6 Alternate Procedure for the Extraction of Sludges, Oil, Tar, and Still Bottoms.

Alternate procedure for the extraction of sludges, oil, tar, and still bottoms (SAS 6179-A, SOW for the Analysis of Polychlorinated Dibenzo-p-Dioxins (PCDD) and Polychlorinated Dibenzofurans, 12/90 with published modifications).

9.1.6.1 Characterize the sample matrix to determine its organic solvent solubility.

9.1.6.2 If the sample is soluble in hexane or methanol, proceed with section 9.1.4. with the following modifications:

i. Weigh out 1.00 g (+0.05 g) of sample.

ii. Scale down methanol proportionally, i.e., use 2.0 ml methanol.

9.1.6.3. If the matrix characterization indicates that the sample is soluble in methylene chloride, toluene, or benzene, proceed as follows:

i. Using a properly calibrated top loading balance, place an appropriate labelled 8 oz. clear Boston round bottle on balance pan and tare the balance.

ii. Accurately weigh 1.00 g of sample into the bottle. Record the sample weight to three significant figures on the laboratory chronicle.

iii. Spike with 100 ul of the appropriate spiking solution (internal standards and surrogates, matrix or blank spikes).

iv. Add 100 ml of appropriate extraction solvent (from matrix characterization).

v. Cap securely and shake on wrist action shaker for at least two hours.

vi. Solvent exchange extracts to hexane.

- Solvent exchange capability is dependent upon solvent boiling point. Lower boiling solvents (methylene chloride, hexane) can be exchanged using a steam bath. Higher boiling solvents (toluene) will require a heating mantle to complete the solvent exchange.

- On occasion, samples extracts cannot be directly solvent exchanged to hexane -- upon initial concentration the extract will become very viscous and/or begin to polymerize. Should this occur,

reconstitute extract in minima amount of extraction solvent, suc that extract is no longer viscous Proceed as follows:

- Set-up a large bor chromatographic column wit teflon stopcock.
- Add approx. 130 ml hexane t column, such that hexane occupies lower third of reservoir bowl.
- Charge column with 20.0 g of activated neutral silica gel.
- Drain into waste vessel until hexane level is just above surface of silica gel. NOTE: Rinse bowl with hexane during draining to wash down any adhered silica gel.
- Place prepared column over appropriate receiving vessel. K-D apparatus for methylene chloride extracts, 500 ml boiling flask for toluene extracts.
- Quantitatively transfer extract to column, using 3 rinses with extraction solvent.
- Elute extract with 250 ml hexane.
- Proceed with solvent exchange (as above) as though extract was in original extraction solvent.

9.2 Extract Cleanup Procedures

Extract cleanup procedures are employed for the removal of co-extracted organic compounds which may be pose interference difficulties during instrumental analysis. Individual cleanup procedures are selected based on the nature of the interfering compounds.

9.2.1 Acid/Base Washing

9.2.1.1. In a 250-ml Separatory funnel, partition th solvent (15 ml hexane) Against 40 ml of 2 percent (weight/volume) potassium hydroxide Shake for 2 min.

Remove and discard the aqueous layer (bottom). Repeat the base washing until no color is visible in the bottom layer (perform base washings a **maximum** of four times). Strong base (KOH) is known to degrade certain PCDD/PCDF's, contact time must be minimized.

9.2.1.2. Partition the solvent (15 ml hexane) against 40 ml of 5 percent (w/v) sodium chloride. Shake for 2 min. Remove and discard aqueous layer (bottom).

NOTE: Care should be taken due to the heat of neutralization and hydration.

9.2.1.3. Partition the solvent (15 ml hexane) against 40 ml of concentrated sulfuric acid. Shake for 2 min. Remove and discard the aqueous layer (bottom). Repeat the acid washings until no color is visible in the acid layer. (Perform acid washings a maximum of four times.)

9.2.1.4. Partition the extract against 40 ml of 5 percent (w/v) sodium chloride. Shake for 2 min. Remove and discard the aqueous layer (bottom). Dry the organic layer by pouring through a funnel containing anhydrous sodium sulfate into a 50-ml round bottom flask, wash the separatory funnel with two 15-ml portions of hexane, pour through the funnel, and combine the hexane extracts. Concentrate the hexane solution to near dryness with a rotary evaporator (35-C water bath), making sure all traces of toluene are removed. (Use of blowdown with an inert gas to concentrate the extract is also permitted). Alternatively, employ a KD apparatus to complete the concentration process.

9.2.2 Alumina Column Chromatography. Separation of polar interferents using a gravity column (Glass 300mm x 10.5mm) packed as follows:

9.2.3.1. Insert a glass wool plug into the bottom o the column. Add a 4-g layer of sodium sulfate Add a 4g layer of Woelm Super 1 neutra alumina. Tap gently to pack and eliminate ai spaces. Cover the alumina with a 4-g layer o sodium sulfate.

9.2.3.2. Elute with 10ml of hexane closing the stopcock immediately before exposing the sodium sulfate to the air. Check for column channeling and discard if it has occurred.

9.2.3.3. Re-constitute the residue from the sample extraction step in 2ml of hexane and apply the solution to the top of the column. Elute with sufficient hexane to complete the transfer of the extract onto the column. Discard the eluent.

9.2.3.4. Elute the column with 10 ml of 8% (volume/volume) methylene chloride in hexane to remove impurities. Save the eluent and check for PCDD/PCDF breakthrough (See PCDD/PCDF analysis SOP). Continue the elution with 15 ml of 60% methylene chloride in hexane and collect the eluant in a 15 ml concentrator tube. Dioxins and furans will be contained in this fraction. Retain this fraction for concentration and subsequent GC/MS analysis or additional chromatographic cleanup as required.

9.2.3 Multi-Stage Silica Gel Column (Alternate Procedure)

9.2.3.1. Pack a gravity column (glass 300-mm x 1.8cm I.D. with 250ml reservoir), fitted with a Teflon stopcock, in the following manner:

Insert a glass-wool plug into the bottom of the column. Fill the column with hexane (approx 130ml). Add a 1 gram layer of neutral silica gel, followed by (in order) a 2 gram layer of basic silica gel, a 1 gram layer of neutral silica gel, a 10 gram layer of acid silica gel, and a 2 gram layer of neutral silica gel. Woelm super 1 neutral alumina.

9.2.3.2. Drain the hexane into a waste container stopping just before the uppermost layer of silica gel is exposed. Rinse adhering silica gel from the sides od the column with additional hexane.

9.2.3.3. Prepare a small bore alumina column in the following manner:

Insert a glass-wool plug into the bottom of the column. Add 6.0 grams of acidic alumina, tap to settle. Add 1.0 grams sodium sulfate to the top of the column. Rinse adhering silica gel from the sides of the column with hexane. Continue filling the column with hexane (approx 130ml) until the level reaches the bottom of the reservoir. Drain the hexane into a waste container stopping just before the uppermost layer of silica gel is exposed.

9.2.3.4. Dissolve the residue from Step 9.2.1 in 2 ml of hexane and apply the hexane solution to the top of the silica gel column. Complete the transfer with multiple hexane rinses. Elute the extract with sufficient hexane to complete the transfer of the sample cleanly to the surface of the alumina. Place the reservoir of the alumina column directly below the stopcock of the silica gel column. Rinse the reservoir of the large bore column with 3.0 ml hexane. Again drain the hexane into a waste container stopping just before the uppermost layer of silica gel is exposed.

9.2.3.5. Add 150 ml of hexane to the upper reservoir, open the stop cocks of each column and allow the hexane to completely drain through both columns. Discard the eluate. rinse the reservoir with 2.0 ml of hexane, elute and discard.

9.2.3.6. Add 20.0ml of hexane to the lower (alumina) column, elute to the top of the sodium sulfate layer, and discard the eluant.

9.2.3.7 Replace the waste vessel with a labeled 50 ml concentrator tube. Add 20ml of 20% methylene chloride in hexane to the reservoir of the column and continue the elution. Collect the eluate.

9.2.3.8 Concentrate the methylene chloride/hexane eluate to approximately 2-3 ml using either nitrogen blowdown or micro-KD apparatus.

9.2.4 Carbon Column Cleanup. Separation of planar molecules from PCDD/PCDF.

9.2.4.1. Prepare a micro-carbon column packing by mixing 5% methanol pre-washed, active carbon (AX21, Anderson Development Company) with 95% type 60 EM reagent 70-230 mesh Silica Gel and activating at 130$_{o}$C for 6 hours.

9.2.4.2. Cut off the ends of a 10ml semiological disposable pipette, insert a glasswool plug into the pipette and pack it with 1.0 gram of carbon/silica gel mixture. Cap the carbon column with an additional glass wool plug.

9.2.4.1. Concentrate the 60 percent fraction eluant (Paragraph 9.2.2.4 or 9.2.3.8) to about 2 to 3 ml. Rinse the carbon with 5 ml cyclohexane/methylene chloride (50:50 v/v) in the forward direction of flow and in the reverse direction of flow. While still in the reverse direction of flow, transfer the sample concentrate to the column and elute with 10 ml of cyclohexane/methylene chloride (50:50 v/v) and 5 ml of methylene chloride/methanol/benzene (75:20:5, v/v). Save all above eluates and combine (this fraction may be used as a check on column efficiency). Now turn the column over and in the direction of forward flow elute the PCDD/PCDF fraction with 20 ml toluene. Note: Be sure no carbon fines are present in the eluant.

9.2.4.2. Evaporate the toluene fraction to about 1 ml on a rotary evaporator using a water bath at 50°C. Transfer to a 2.0 ml reacti-vial using a toluene rinse and concentrate to 200-300ul using a stream of nitrogen (N-Evap). The final volume should be 100 ul for soil samples and 500 ul for sludge, still bottom, and fly ash samples; this is provided for guidance, the correct volume will depend on the relative concentration of target analytes. Extracts which are determined to

be outside the calibration range for individual analytes must be diluted or a smaller portion of the sample must be re-extracted. Gently swirl in the solvent on the lower portion of the vessel to ensure complete dissolution of the PCDD's and PCDF's.

10.0 PACKAGING OF EXTRACTS (100 ul MICROVIALS)

10.1 Packaging Procedures

To eliminate any confusion or switching of extracts it is imperative that extracts and microvials be kept in same numerical order at all times. Always work "top to bottom" and "left to right" when referencing extracts and their containment vessels, i.e. The job number at the top of the lab chronicle is considered the "first" extract and will be placed left-most when handling extracts in a horizontal procedure (e.g column work, N-Evap, packaging, etc...). The bottom job number on the laboratory chronicle is considered the "last" extract and will appear right-most in a horizontal procedure. The intermediate extracts are then placed sequentially from left to right as they are read, going down the laboratory chronicle.

10.1.1 Prepare microvials for receipt of extract by writing job number (using a Sharpie waterproof pen) along length of microvial. "Double-label" the vial by writing job number again on the opposite side of vial.

NOTE: Use black or blue pen only, for ease of reading.

10.1.2 Add 5.0 ul of dodecane to each of the microvials. (The dodecane acts as a "keeper" to prevent the extract from going to dryness). Replace the microvials, in order, into their vial case(s).

10.1.3 Load the extract anti-clockwise onto the nitrogen evaporator (N-Evap) following the order they appear on the laboratory chronicle. Refer to SOP: IFB/PCDX Concentration by Nitrogen Evaporation (N-EVAP).

10.1.4 Concentrate the extracts to approximately 100 ul; remove from N-Evap (leaving pipettes); and place in the containment rack--again in the same order as they appear on laboratory chronicle.

10.1.5 Turn off the nitrogen supply at the plenum knob.

10.1.6 Place a 9" disposable pasteur pipette, fitted with pipette bulb, into each of the extract containmer vessels.

NOTE: The hard-rubber 1.0 ml pipette bulbs ar recommended for this procedure, as they are less flexibl than latex bulbs and therefore less likely to allo accidental loss of extract.

10.1.7 Carefully place the microvials (in order) on the N-Evap so that the full width of the vial body is in contact with the support place assembly. The vials should be absolutely vertical--not leaning in any direction.

10.1.8 Lower the corresponding nitrogen-carrying pipette, such that the tip barely intrudes into the vial opening. Position the pipette tip, such that it is located to the rear of the vial (towards center of N-Evap), so that a pipette tip to transfer the extract may be inserted between the nitrogen pipette and the microvial inner-wall.

NOTE: At this point it is best to make two safety checks:

1. Make sure nitrogen is off at plenum knob.
2. Ensure all individual nitrogen ports are open to the same degree (i.e., none partially open, while others fully open).

10.1.9 Carefully transfer the first three extracts from their containment vessels to their respective microvials.

10.1.10 Slowly turn on the nitrogen at the plenum know, while watching the contents of the microvials, to make sure that extracts will not be blown out. The flow of nitrogen onto the surface of the extracts should be barely perceptible.

10.1.11 Complete the transfer of the remaining extracts.

10.1.12 Using a 9" disposable pipette, add 12 drops of hexane or 300 ul to each of the containment vessels.

10.1.13 Starting at a point representing half the initial volume of the extract previously in the containment vessel (i.e., if the extract was at 20 ml before N-Evap, start at 10 ml volume line): Wash the inside walls of the containment vessel in a circular motion, progressively moving downwards with the rinses.

10.1.14 Ensuring the volume in the microvials is low enough t receive the hexane rinse, transfer the rinse from th containment vessels to their respective microvials.

10.1.15 Repeat steps 10.1.12 through 10.1.14; this time beginnin the wash at the original extract volume (e.g., fro above-- at 20 ml volume line).

10.1.16 Concentrate extract (with rinses) down to a volume of 5.0 ul.

NOTE: The extract will concentrate quite rapidly to a volume of 2-5 ul. At this point, the volume will not appear to decrease appreciably, due to the presence of the dodecane keeper. Remove the microvial from the N-Evap when no further concentrating is evident.

10.1.17 Compare the volume in the microvial to the microvial volume standards in the clear lucite rack. Add an appropriate amount of dodecane to bring the final volume to the mircovial to 20 ul.

10.1.18 Cap the vial, using an 11 mm, teflon-lined crimp cap. Ensure the cap fits tightly, and may not be rotated.

10.1.19 Holding the top of the vial, "Flick" the vial bottom with index finger to mix contents.

10.1.20 Place vial (in proper order) in vial case. Label case with QT-Batch number and GC/MS A-type.

10.1.21 Place samples in GC/MS extract refrigerator for analysis.

10.2 Preparation for Analysis

10.2.1 Approximately 1 hr before HRGC/LRMS analysis, transfer an aliquot of the extract to a micro-vial. Add to this sufficient recovery standard (13Cl21,2,3,4-TCDD) to give a concentration of 500 ng/ml. (Example: 36 ul aliquot of extract and 4 ul of recovery standard solution. Remember to adjust the final result to correct for this dilution. Inject an appropriate aliquot (1 or 2 ul) of the sample into the GC/MS instrument.

11.0 SUPPLEMENTAL DOCUMENTS AND REFERENCES

11.1 Test Methods for Evaluating Solid Waste, SW-846 Third Edition, November 1986. Method 8280, Revision 0.

11.2 ETC Safety Manual

11.3 ETC Sample and Hazardous Waste Disposal SOP #ED201001

11.4 The Preparation of Standard Solutions for PCDD/PCDF Analysis by SW-846, SOP number EX600600.

1.0 SCOPE AND APPLICATION

1.1 This SOP describes the determination of tetra-, penta-, hexa-, hepta-, and octachlorinated dibenzo-p-dioxins (PCDD's) and dibenzofurans (PCDF's) in chemical waste extracts using computerized high resolution Gas Chromatography/Mass Spectrometry.

1.2 The sensitivity of this method is dependent upon the level of interferents within a given matrix. Proposed quantification levels for target analytes were 2 ppb in soil samples, up to 10 ppb in other solid wastes and 10 ppt in water.

1.3 Certain 2,3,7,8-substituted congeners are used to provide calibration and method recovery information. Proper column selection and access to reference isomer standards, may in certain cases, provide isomer specific data. Special instructions are included which measure 2,3,7,8-substituted congeners.

1.4 This method is specific for the following A-Types:

1 AP9/PCDX, 2 AP9/PCDX, 1 PCDX/8280, 2 PCDX/8280, 3 PCDX/8280, 4 PCDX/8280, ISO/2378.

2.0 SUMMARY OF METHOD

2.1 Environmental samples are extracted and prepared for analysis following the procedures outlined in ETC SOP EX411900. The GC/MS instrument is calibrated for mass assignment, abundance, instrument response, and chromatographic retention time using PCDD and PCDF reference standard solutions (Cl_4-Cl_8) which have been internal standardized with ^{13}C labeled analogs of several PCDD and PCDF reference compounds. The prepared sample extracts (which have been internal standardized prior to extraction) are also analyzed by GC/MS. PCDDs and PCDFs detected in the extracts which meet specific criteria are qualitatively and quantitatively identified using chromatographic relative retention time information, mass abundance information, and calibration response factors.

3.0 INTERFERENCES

3.1 Solvents, reagents, glassware and other sample processing hardware may yield discrete artifacts and/or elevated baselines which may cause misinterpretation of chromatographic date. All these materials must be demonstrated to be free from interferents under the conditions of analysis by running laboratory method blanks.

3.2 The use of high purity reagents and solvents help to minimiz interference problems. Purification of solvents by distillatic in all glass systems may be required.

3.3 Interferents co-extracted from the sample will vary considerabl from source to source, depending upon the industrial process bein sampled. PCDD's and PCDF's are often associated with othe interfering chlorinated compounds such as PCB's an polychlorinated diphenyl ethers which may be found a concentrations several orders of magnitude higher than that of th analytes of interest. Retention times of target analytes must b verified using reference standards. These values must correspon to the retention time windows established. While certain cleanu techniques are provided as part of this method, unique samples ma require additional cleanup techniques to achieve the metho detection limit.

3.4 High resolution capillary columns are used to resolve as many PCDI and PCDF isomers as possible; however, no single column is know to resolve all of the isomers.

4.0 SAFETY

4.1 Human Toxicology

4.1.1 The human toxicology of PCDD/PCDF is not well defined at present, although the 2,3,7,8-TCDD is a solid at room temperature, and has a relatively low vapor pressure. The solubility of this compound in water is only about 200 part-per-trillion, but the solubility in various organic solvents ranges from 0.001 percent to 0.14 percent.

4.1.2 On the basis of the available toxicological and physical property data and TCDD, this compound, as well as the other PCDD and PCDF, should be handled only by highly trained personnel who are thoroughly versed in the appropriate procedures, and who understand the associated risks.

4.2 Safety Equipment

4.2.1 Safe Lab Practice

PCDD/PCDF and samples containing these are handled using essentially the same techniques as those employed in handling any contaminated environmental sample. Well-ventilated, controlled-access laboratories are required, and laboratory personnel entering these laboratories should wear appropriate safety clothing.

4.2.2 Protective Clothing

Eye protection equipment must be worn at all times whil working in the analytical laboratory with PCDD/PCDF Various types of gloves can be used by personnel depending upon the analytical operation bein accomplished. Latex gloves are generally utilized, whe handling samples.

4.2.3 Other Lab Safeguards

Benches and other work surfaces in the laboratory should be covered with plastic-backed absorbent paper during all analytical processing. The effluent from mechanical vacuum pumps and gas chromatographs on the mass spectrometers should be vented to the atmosphere preferably only after passing through HEPA particulate filters and vapor-sorbing charcoal.

4.3 Disposal

All laboratory ware, safety clothing, and other items potentially contaminated with PCDD, PCDF in the course of analyses must be carefully secured and subjected to proper disposal. When feasible, liquid wastes are concentrated, and the residues are placed in approval steel hazardous waste drums fitted with heavy gauge polyethylene liners. Glass and combustible items are compacted using a dedicated trash compactor used only for hazardous waste materials and then placed in the same type of disposal drum. Disposal of accumulated wastes is periodically accomplished by high temperature incineration of EPA-approved facilities.

5.0 **APPARATUS AND MATERIALS**

5.1 Gas chromatograph/mass spectrometer data system.

5.1.1 Gas Chromatograph: An analytical system with a temperature-programmable gas chromatograph and all required accessories including syringes, analytical columns and gases.

5.1.2 Fused silica capillary columns.

5.1.2.1 Capillary columns which provide separation of 2,3,7,8 TCDD from all other TCDD isomers equivalent to that specified in Section 6.3 must be used; this separation must be demonstrated and documented using the performance test mixture described in Section

6.3. The following columns have been demonstrated to meet the separation criteria specified in Section 6.3. DB-5 is employed by ETC as the column of choice for dioxin analysis unless special applications explicitly require the use of an alternate column.

(a) DB-5 (60-m x 0.25-mm I.D.; 0.25-um film thickness)
(b) 50-m CP-Sil-88
(c) 30-m SP-2250

5.1.3 Mass Spectrometer: A low resolution instrument is specified, utilizing 70 volts (nominal) electron energy in the electron impact ionization mode. The system must be capable of selected ion monitoring (SIM) for at least 11 ions (simultaneously) with a cycle time of 1 second or less. Minimum integration time for SIM is 50 ms per m/z. The use of systems not capable of monitoring 11 ions simultaneously will require the analyst to make multiple injections.

5.1.4 GC/MS Interface

Direct Interface of column exit into source:

Transfer Line Temp:	300°C
Source Temp:	265°C
Analyzer Temp:	250°C

5.1.5 Data system: A computer system must be interfaced to the mass spectrometer. The system must allow for the continuous acquisition and storage on machine-readable media of all data obtained throughout the duration of the chromatographic program. The computer must have software that can search any GC/MS data file for ions of a specific mass and can plot such ion abundances versus time or scan number. This type of plot is defined as an Selected Ion Current Profile (SICP). Software must also be able to integrate the abundance in any SICP, between specified time or scan number limits.

5.2 Pipets-Disposable, Pasteur, 150-mm long x 5 mm I.D. (Fisher Scientific Company, No. 13-678-6A, or equivalent).

5.2.1 Pipet, disposable, serological 10 ml (American Scientific Products No. P4644-10 or equivalent) for preparation of the carbon column.

5.3 Reacti-vial 2 ml, amber glass (Pierce Chemical Company). Thes should be silanized prior to use.

5.4 Filter paper, 18 cm circles.

6.0 REAGENTS AND STANDARD PREPARATION

6.1 Prepare stock standards in a glove-box from concentrates or nea materials. The stock solutions and standards are stored in a isolated refrigerator at 4°C and protected from light and the checked frequently for signs of degradation or evaporatio especially just prior to the preparation of working standards. Calibration standard solutions must be replaced routinely afte six month.

The method for standards preparation is described in detail in ETC SOP number EX600600, Preparation of Standards for PCDX analysis.

6.2 Calibration Standards (CALSTDS)

6.2.1 Five levels of standards for initial calibration are required as follows:

Analyte	Function	CC1	CC2	CC3	CC4	CC5
2378-TCDD	Native	0.2	0.5	1.0	2.0	5.0
12378-PCDD	Native	0.2	0.5	1.0	2.0	5.0
123678-HXCDD	Native	0.2	0.5	1.0	2.0	5.0
1234678-HPCDD	Native	0.2	0.5	1.0	2.0	5.0
12346789-OCDD	Native	0.2	0.5	1.0	2.0	5.0
2378-TCDF	Native	0.2	0.5	1.0	2.0	5.0
12378-PCDF	Native	0.2	0.5	1.0	2.0	5.0
123478-HXCDF	Native	0.2	0.5	1.0	2.0	5.0
1234678-HPCDF	Native	0.2	0.5	1.0	2.0	5.0
12346789-OCDF	Native	0.2	0.5	1.0	2.0	5.0
37C142378-TCDD	SURR	0.06	-	0.12	-	0.20
13C122378-TCDD	ISTD	0.5	0.5	0.5	0.5	0.5
12C12123678-HXCDD	ISTD	0.5	0.5	0.5	0.5	0.5
13C1212346789-OCDD	ISTD	1.0	1.0	1.0	1.0	1.0
13C122378-TCDF	ISTD	0.5	0.5	0.5	0.5	0.5
13C121234678-HPCDF	ISTD	0.5	0.5	0.5	0.5	0.5
13C121234-TCDD	RSTD	0.5	0.5	0.5	0.5	0.5
13C12123789-HXCDD	RSTD	0.5	0.5	0.5	0.5	0.5

6.2.2 Performance Check Standard (PCSTD)

The column performance check solution contains unlabeled TCDD isomers and the labeled recovery standard The mixture is used to verify chromatographic separatio and demonstrate TCDD isomer resolution. The mixture, which is commercially obtained from Cambridge Isotope Laboratories, contains the following compounds:

1,2,3,4 TCDD 10 ug/ml
1,2,3,7 TCDD 10 ug/ml
1,2,3,8 TCDD 10 ug/ml
1,2,7,8 TCDD 15 ug/ml
1,4,7,8 TCDD 15 ug/ml
2,3,7,8 TCDD 10 ug/ml
1,2,3,4 TCDD 10 ug/ml (C^{13})

6.2.3 Window STD

6.2.3.1 Contains 8 pairs of isomers, one pair for each tetra-through dioxin/furan congener group. Each pair of isomers consists of the earliest and latest eluting isomer for a specific congener. This standard is used to define the retention time "windows" in which the dioxin/furan native compounds will appear.

6.3 Spiking Standards

6.3.1 PCDX SURR/ISTD Spike (SP2)

Compound	Concentration
$^{13}C_{12}$ 2,3,7,8-TCDD	0.5
$^{13}C_{12}$ 1,2,3,6,7,8-HXCDD	0.5
$^{13}C_{12}$ - OCDD	1.0
$^{13}C_{12}$ 2,3,7,8-TCDF	0.5
$^{13}C_{12}$ 1,2,3,4,6,7,8-HpCDF	0.5

Spiked into each sample and replicate.

6.3.2 Blank and Matrix Spike Solution (SP1)

Compound	Concentration
2,3,7,8-TCDD	0.5
1,2,3,7,8-PeCDD	0.5
1,2,3,4,7,8-HxCDD	0.5
1,2,3,4,6,7,8-HpCDD	0.5
1,2,3,6,7,8-OCDD	1.0
2,3,7,8-TCDF	0.5
1,2,3,7,8-PeCDF	0.5
1,2,3,4,7,8-HxCDF	0.5
1,2,3,4,6,7,8,9-OCDF	0.5

$^{13}C_{12}$ 2,3,7,8-TCDD	0.5
$^{13}C_{12}$ 1,2,3,6,7,8-HXCDD	0.5
$^{13}C_{12}$ - OCDD	1.0
$^{13}C_{12}$ 2,3,7,8-TCDF	0.5
$^{13}C_{12}$ 1,2,3,4,6,7,8-HpCDF	0.5

Spiked into each blank and matrix spike.

6.3.3 Recovery Standard (RSTD)

The recovery standard is spiked into each extract (samples, blanks, and spikes) prior to GC/MS analysis to determine recovery of internal standards.

Compound	Concentration (ug/ml)
$^{13}C_{12}$1234-TCDD	10
$^{13}C_{12}$123789-HxCDD	10

7.0 INSTRUMENT SETUP AND CALIBRATION

7.1 Two types of calibration procedures are required. One type, initial calibration, is required before any samples are analyzed and is required intermittently throughout sample analyses as dictated by results of routine calibration procedures described below. The other type, continuing calibration, consists of analyzing the column performance check solution and a concentration calibration solution of 500 ng/ml. (Paragraph 6.2). No samples are to be analyzed until acceptable calibration as described in Paragraph 6.3 and 6.6 is demonstrated and documented.

7.2 Initial GC/MS setup. Establish operating parameters for the GC/MS system; the instrument must be tuned to meet the isotopic ratio criteria listed in the table in Sec 7.1.3 for PCDD's and PCDF's. Do not proceed with calibration and analysis if this isotopic criteria is not achieved.

7.2.1 Chromatographic Conditions

7.2.1.1 For 2,3,7,8-TCDD: 50m CPSil-88 Column

Injector port:	300°C
Oven Temp 1:	150°C
Oven Time:	1.0 min.
Oven Temp Rate 1:	4.0°C/min.
Oven Temp 2:	235°C
Oven Time:	20 min.

7.2.1.2 Alternative Conditions for 2,3,7,8-TCDD:

60m x .25 mm x .25 u film FSOT DB-5 column
Same temperature conditions as in 7.1.1.1.

7.2.1.3 Conditions for tetra- through octa- PCDX, 2,3,7,8-substituted specific:

60m x .25 mm x .25 u film FSOT DB5 column

Injector port:	300°C
Oven Temp 1:	150° min.
Time 1:	1 min.
Oven Temp Rate 1:	4°C/min.
Oven Temp 2:	240°C
Time 2:	7.5 min.
Oven Temp Rate 2:	30°C/min.
Oven Temp 3:	340°C min.
Time 3:	24 min.

7.2.2 Mass Spectrometer Operational Parameters for 2,3,7,8-TCDD:

MS Scan Parameters
Start/Stop
20.00 40.00

MZ	Dwell (milliseconds)
257.0	100
259.0	100
320.0	100
322.0	100
328.0	100
332.0	100
334.0	100

7.2.3 Mass Spectrometer Operational Parameters for all other PCDX analyses. Establish selected ion monitoring groups as follows:

Group 1 Start/Stop 20.00 30.00		Group 2 Start/Stop 33.04 35.65		Group 3 Start/Stop 35.65 37.53		Group 4 Start/Stop 37.53 39.72		Group 5 Start/Stop 39.72 42.72	
MZ	Dwell	MZ	Dwell	MZ	Dwell	MZ	Dwell	MZ	Dwell
243.0	25	277.0	25	277.0	25	311.0	25	345.0	25
257.0	25	293.0	25	293.0	25	327.0	25	361.0	25
259.0	25	311.0	25	311.0	25	345.0	25	379.0	25
277.0	25	320.0	25	327.0	25	361.0	25	395.0	25
293.0	25	322.0	25	338.0	25	372.0	25	406.0	25

304.0	25	327.0	25	340.0	25	374.0	25	408.0	25
306.0	25	338.0	25	354.0	25	376.0	25	410.0	25
316.0	25	340.0	25	356.0	25	388.0	25	420.0	25
318.0	25	342.0	25	372.0	25	390.0	25	422.0	25
320.0	25	354.0	25	374.0	25	392.0	25	424.0	25
322.0	25	356.0	25	376.0	25	402.0	25	426.0	25
328.0	25	358.0	25	388.0	25	404.0	25	436.0	25
332.0	25	372.0	25	390.0	25	406.0	25	438.0	25
334.0	25	374.0	25	392.0	25	408.0	25	442.0	25
338.0	25	376.0	25	402.0	25	410.0	25	444.0	25
340.0	25	388.0	25	404.0	25	420.0	25	458.0	25
354.0	25	390.0	25	408.0	25	422.0	25	460.0	25
356.0	25	392.0	25	410.0	25	424.0	25	470.0	25
376.0	25	410.0	25	424.0	25	426.0	25	472.0	25
410.0	25	446.0	25	446.0	25	480.0	25	514.0	25

Once tuning and mass calibration procedures have been completed, a column performance check mixture containing the isomers listed below should be injected into the GC/MS system:

TCDD	1,3,6,8; 1,2,8,9; 2,3,7,8; 1,2,3,4; 1,2,3,7; 1,2,3,9
PeCDD	1,2,4,6,8; 1,2,3,8,9
HxCDD	1,2,3,4,6,9; 1,2,3,4,6,7; 1,2,4,6,7,9; 1,2,4,6,8,9
OCDD	1,2,3,4,6,7,8,9
TCDF	1,3,6,8; 1,2,8,9
PeCDF	1,3,4,6,8; 1,2,3,8,9
HxCDF	1,2,3,4,6,8; 1,2,3,4,8,9
HpCDF	1,2,3,4,6,7,8; 1,2,3,4,7,8,9
OCDF	1,2,3,4,6,7,8,9

7.2.4 Insure that the following isotopic ratios are achieved:

	Selected Ions m/z		Native Relative Intensity
PCDD's	**Native**	**13C**	
Tetra	320/322	(332/334)	0.65 - 0.89
Penta	354/356	(366/368)	0.55 - 0.75
Hexa	392/390	(404/402)	0.69 - 0.93
Hepta	426/424	(438/436)	0.83 - 1.12
Octa	458/460	(454/456	0.75 - 1.01
PCDF's	**Native**	**13C**	
Tetra	304/306	(316/318)	0.65 - 0.89
Penta	338/340	(350/352)	0.55 - 0.75
Hexa	376/374	(388/386)	0.69 - 0.93
Hepta	410/408	(422/420)	0.83 - 1.12
Octa	442/444	(454/456)	0.75 - 1.01

7.2.5 Window Standard

The window standard contains the earliest and latest eluting isomers of each congener group. Inject to establish retention time windows. The window standard must be run prior to all PCDX batches (more specifically - at the beginning of any PCDX sequence file). Scan start/stop times must be adjusted for any chromatographic shifts observed in the window defining mixture.

7.2.6 Performance Check Standard (PC STD)

Contains 6 TCDD isomers. Used to verify instruments separation and resolution capabilities.

7.2.6.1. PC STDs must bracket any samples (including CC2 STD), and must have injection times within 12 hours of each other, i.e., if PC at the beginning of sample run in injected at 11:14, a "post-sample(s)" PC must be injected before 23:14. (NOTE: Average run time for PCDX analysis is 45-50 Min.).

7.2.6.2 Insure that 2,3,7,8- and 1,2,3,4-TCDD are resolved with a valley ≤ 25% where

$$\text{Valley \%} = \frac{(X)}{y} \times 100$$

as shown on the ion profile included in the Appendix.

7.3 Initial Calibration

7.3.1 Analyze each of the 5 calibration standards (6.2.1) in triplicate using 2ul injections. All injections of standards, sample extracts and blank extracts must also be made at this injection volume.

7.3.1.1 Acceptable ion sensitivity is verified by achieving a minimum signal-to-noise ration of 50:1 for the m/z 320 ion of 2,3,7,8-TCDD obtained from injection of the 200 ng/ml calibration standard.

7.3.2 Calculate the relative response factors (RRF's) of analytes vs. the appropriate internal standards, as described below. Relative response factors for the hepta- and octa-chlorinated CDD's and CDF's are to be calculated using the corresponding $^{13}C_{12}$-octachlorinated standards.

Relative response factors are calculated using dat obtained from the analysis of multi-level calibratio standards according to the equation:

$$RRF = \frac{A_s \times C_{is}}{A_{is} \times C_s}$$

Where:

A_s = Area of quantitation ion of the compound of interest.

A_{is} = Area of quantitation ion of the appropriate internal standard (m/z 334 for $^{13}C_{12}$-2,3,7,8-TCDD; m/z 472 for $^{13}C_{12}$-OCDD).

C_{is} = Concentration of the internal standard.

C_s = Concentration of the compound of interest.

The concentrations of unknown isomers of TCDD shall be calculated using the mean RRF determined for 2,3,7,8-TCDD.

The concentrations of unknown isomers of PeCDD shall be calculated using the mean RRF determined for 1,2,3,7,8-PeCDD of any available 2,3,7,8-X-PeCDD isomer.

Acceptable SIM sensitivity is verified by achieving a minimum signal-to-noise ratio of 50:1 for the m/z 320 ion of 2,3,7,8-TCDD obtained from injection of the 200 ng/mL calibration standard (CC1).

7.3.3 Calculate the mean relative response factor and the relative standard deviator from the triplicate determinations of each calibration standard (CC1 and CC5) as follows.

7.3.3.1 Average response factor for triplicate analysis.

$$RRF_T = \frac{\sum_{i=1}^{3} RRF_i}{3}$$

Where:

RRF_i = The response factor for the calibration standard from an individual determination.

RRF_T = The average response factor for the triplicate analysis.

7.3.3.2 Relative Standard Deviation

$$RSD_T = \frac{\sqrt{\sum_{i=1}^{3} (RRF_i - RRF_T)^2}}{RRF_T} \times 100$$

Where:

RSD_T = Relative standard deviation for the triplicate analysis

RRF_i = Defined as above

RRF_T = Defined as above

7.3.3.3 The relative standard deviation for the triplicate analysis must not exceed 15%. Perform corrective action before proceeding with analysis if this criteria is not achieved.

7.3.4 Calculate the mean response factor and the relative standard deviation for each individual standard for the entire calibration curve as follows:

7.3.4.1 Average response factor for the complete calibration range (CC1 - CC5).

$$RRF_{cal} = \frac{\sum_{i=1}^{5} RRF_{T(i)}}{5}$$

Where:

RRF_{cal} = Mean response factor for the calibration range for an individual analyte.

$RRF_{T(i)}$ = The average response factor for the triplicate analysis of the individual standard from 7.3.3.1.

7.3.4.2 Relative Standard Deviation for the calibration range.

$$RSD_T = \frac{\sum_{i=1}^{5} (RRF_{T(i)} - RRF_{cal})^2}{\frac{4}{RRF_{cal}}}$$

Where:

RSD_{cal} = Relative standard deviation for the calibration range
$RRF_{T(i)}$ = Defined as above (7.3.4.1)
RRF_{cal} = Defined as above (7.3.4.1)

7.3.4.3 The relative standard deviation for the calibration curve must not exceed 15%. Perform corrective action before proceeding with analysis if this criteria is not achieved.

7.4 Continuing Calibration

Continuing calibration consists of analyzing the column performance check solution and a concentration calibration solution of .500 ng/uL (500 ppb). No samples are to be analyzed until acceptable calibration is demonstrated and documented.

7.3.1 Inject a 2 ul aliquot of the column performance check mixture. Acquire at least five data points for each GC peak and use the same data acquisition time for each of the ions being monitored.

NOTE: The same data acquisition parameters previously used to analyze concentration calibration solutions during initial calibration must be used for the performance check solution. The column performance check solution must be run at the beginning and end of the 12 hour period. If the contractor laboratory operates during consecutive 12 hour periods (shifts), analysis of the performance check solution at the beginning of each 12 hour period and at the end of the final 12 hour period is sufficient.

Determine and document acceptable column performance as described in Paragraph 7.1.5.2.

7.4 Inject a 2 ul aliquot of the calibration standard solution (CC2 STD) at 500 ng/ml at the beginning of the 12 hour period. Determine and document acceptable calibration as specified (sensitivity and relative ion abundance). The measured RRF's of all analytes must be within ± 30 percent of the mean values established by initial analyses of the calibration standard solutions.

8.0 QUALITY CONTROL

8.1 Before processing any samples, the analyst must demonstrate through the analysis of a method blank that all glassware and reagents are interferant-free at the method detection limit of the matrix of interest. Each time a set of samples is extracted, or there is a change in reagents, a method blank must be processed as a safeguard against laboratory contamination.

8.2 A laboratory "method blank" must be run along with each analytical batch (20 or few samples).

8.3 GC column performance must be demonstrated initially and verified prior to analyzing any sample in a 12 hour period. The GC column performance check solution must be analyzed under the same chromatographic and mass spectrometric conditions used for other samples and standards.

8.4 Accuracy and Precision

8.4.1 Recovery from a blank spike for all analytes must be within 60% to 140%.

8.4.2 Recovery of internal standards in all samples must be within 40% and 120%.

8.4.2.1 If the recovery of any internal standard is outside the criteria, the sample must be re-extracted and re-analyzed.

8.4.3 Recovery from matrix spike for all analytes must be within 60% and 140%.

8.4.4 Replication of duplicate samples must be less than 50% RPD for 2,3,7,8-TCDD. The replication requirements of other PCDX is being developed.

8.5 Summary of QC Samples

Each analytical batch must containing the following QC samples:

8.5.1 Method Blank

8.5.2 Blank Spike

8.5.3 Matrix Spike

8.5.4 Matrix Spike Duplicate

9.0 **GC/MS ANALYSIS**

9.1 Prior to the analysis of any standard or sample, clip the injector end of the column, removing approximately 1.5 to 2.0 inches of the column. Change the injector liner and the injector septum. Heat the oven to 300°C.

9.2 Tune the instrument in MSCAL. Adjust the parameter to tune as follows:

69 - 100%
219 - 85%
502 - 2-3%

9.3 Begin the analytical sequence with a PC and CC_2 (Continuing calibration). Check the percent valley in PC for 1,2,3,4 and 2,3,7,8-TCDD. The two peaks must be resolved with a valley of ≤25% as in 7.1.5.

9.4 Check RRF's in continuing calibration standard. The measured RRF's of all analytes must be within ±30% of the mean values established by initial calibration standard. Check for SIM sensitivity which must meet 50:1 signal to noise ratio for 2,3,7,8-TCDD. Check for relative ion abundance which must meet the criteria (7.1.2).

9.5 Run a window standard to set the retention time window for each congener.

9.6 Approximately one hour before HRGC/LRMS analysis, transfer an aliquot of the extract to a micro-vial. Add to this sufficient recovery standard (5ul of $^{13}C_{12}$1,2,3,4-TCDD and 5 ul of $^{13}C_{12}$123789-HxCDD) to give a concentration of 500 ng/ml. The concentration of the recovery standards in the sample extract must be the same as that in the calibration standards used to measure the response factors.

9.7 Analyze samples and standards with selected ion monitoring, using all of the ions listed in 7.3.2. It is recommended that the GC/MS run be divided into the five selected ion monitoring groups identified in 7.3.2.

9.8 It is recommended that selected ion monitoring section 1 should be applied during the GC run to encompass the retention window of the first and last eluting tetra-chlorinated isomers. If a response is observed at m/z 340 or 356, then the GC/MS analysis must be repeated; selected ion monitoring section 2 should then be applied to encompass the retention window of the first and last eluting penta-chlorinated isomers. **NOTE:** HxCDE, HpCDE, OCDE, NCDE, DCDE, are abbreviations for hexa-, hepta-, octa-, nona-, and decachlorinated diphenyl either, respectively.

9.9 Identification Criteria for PCDD's and PCDF's

9.9.1 All of the characteristic ions, i.e., quantitation ion, confirmation ions, listed above for each class of PCDD and PCDF, must be present in the reconstructed ion chromatogram. It is desirable that M - COCl ion be monitored as an additional requirement. Detection limits will be based on quantitation ions within the molecules in cluster.

9.9.2 The maximum intensity of each of the specified characteristic ions must coincide within 2 scans or 2 seconds.

9.9.3 The relative intensity of the selected, isotopic ions within the molecular cluster of a homologous series of PCDD's of PCDF's must lie within the range specified above.

9.9.4 The GC peaks assigned to a given homologous series must have retention times within the window established for that series by window standard solution.

10.0 CALCULATIONS

10.1 Determine the concentration of individual PCDD/PCDF isomers using the equation:

$$\text{Concentration, ng/g} = \frac{Q_{is} \times A_s}{G \times A_{is} \times RRF}$$

Where:

Q_{is} = ng of internal standard $^{13}C_{12}$-2,3,7,8-TCDD, added to the sample before extraction.

G = g of sample extracted

A_s = are of quantitation of the compound of interest

A_{is} = Response factor of the quantitation ion of the compound of interest relative to m/z quantitation ion of ^{13}C labeled internal standard

NOTE: Any dilution factor should be applied to this calculation.

10.2 The concentrations of detected isomers of TCDD shall be calculated using the mean RRF determined for 2,3,7,8-TCDD and the area of the quantitation ion from the internal standard $^{13}C_{12}$ 2,3,7,8-TCDD.

The concentrations of unknown isomers of PeCDD shall be calculated using the mean RRF determinate for 1,2,3,7,8-PeCDD and the area of the quantitation ion from the internal standard $^{13}C_{12}$ 1,2,3,6,7,8-HXCDD.

The concentrations of unknown isomers of HxCDD shall be calculated using the mean RRF determined for 1,2,3,4,7,8-HxCDD and the area of the quantitation ion from the internal standard $^{13}C_{12}$ 1,2,3,6,7,8-HXCDD.

The concentration of unknown isomers of HpCDD shall be calculated using the mean RRF determined for 1,2,3,4,6,7,8-HpCDD and the area of the quantitation ion from the internal standard $^{13}C_{12}$ 1,2,3,6,7,8-HXCDD.

The concentration of unknown isomers of TCDF shall be calculated using the mean RRF determined for 2,3,7,8-TCDF and the area of the quantitation ion from the internal standard $^{13}C_{12}$ 2,3,7,8-TCDF.

The concentration of unknown isomers of PeCDF shall be calculated using the mean RRF determined for 1,2,3,7,8-PeCDF or any available 2,3,7,8,X-PeCDF isomer the internal standard $^{13}C_{12}$ 2,3,7,8-TCDF.

The concentration of unknown isomers of HxCDF shall be calculated using the mean RRF determined for 1,2,3,6,7,8-HpCDF and the area of the quantitation ion from the internal standard $^{13}C_{12}$ 1,2,3,4,6,7,8-HpCDF.

The concentration of unknown isomers of HpCDF shall be calculated using the mean RRF determined for 1,2,3,4,6,7.8-HpCDF and the area of the quantitation ion from the internal standard $^{13}C_{12}$ 1,2,3,4,6,7,8-HpCDF.

The concentration of the octa-CDD and octa-CDF shall be calculated using the mean RRF determined for each and the area of the quantitation ion from the internal standard.

10.3 If the concentration of any analyte in any sample falls outside linear range, the sample must be re-extracted and re-analyzed using a smaller sample size.

10.4 Calculate the percent recovery, R_{is}, for each internal standard in the sample extract, using the equation:

$$R_{is} = \frac{A_{is} \times Q_{rs}}{A_{rs} \times RF_r \times d\ Q_{is}} = 100\%$$

A_{is} = Area of quantitation ion (m/z 334) of the recovery standard $^{13}C_{12}$-1,2,3,4-TCDD.

Q_{rs} = ng of recovery standard, $^{13}C_{12}$-1,2,3,4-TCDD, added to the extract.

The response factor for determination of recovery is calculated using data obtained from the analysis of the multi-level calibration standards according to the equation:

$$RF_r = \frac{A_{is} \times C_{rs}}{A_{rs} \times C_{is}}$$

10.5 Calculation of total concentration of all isomers within each homologous of PCDD's and PCDF's.

Total concentration or PCDF's = Sum of the concentrations of PCDD's the individual PCDD or PCDF isomers.

11.0 **METHOD DETECTION LIMIT (MDL)**

11.1 The MDL values reported in QR table is calculated from the Maximum Possible Concentration (MPC).

11.2 The MPC is the concentration of the target analyte required to produce a signal with a peak height of 2.5 times the background signal level.

$$MPC = \frac{2.5 \times A_x \times Q_{is}}{A_{is} \times RF_i \times W}$$

Where:

A_x = Peak height of noise of the selected ion
Q_{is} = Quantity (ng) of Internal Standard (I.S.) added to the sample before extraction.
W = Weight (g) of volume (L) of sample extracted

11.3 MPC is automatically calculated by procedure file PH#2.

Where # = Instrument ID

11.4 The program calculates MPC based on a few noise peaks in the selected window. The MPC is reported as the MDL for all PCD and PCDFs.

12.0 SUPPLEMENTAL DOCUMENTS AND REFERENCES

12.1 Test Methods for Evaluating Solid Waste, SW-846 Third Edition, November 1986. Method 8280, Revision 0.

12.2 ETC Safety Manual

12.3 ETC Sample and Hazardous Waste Disposal SOP #ED201001, or latest revision.

12.4 The Preparation of Standard Solutions for PCDD/PCDF Analysis by SW-846, SOP number EX600600, or latest revision.

12.5 The Extraction and Cleanup of Environmental Waste Samples for PCDD/PCDF Analysis by SW-846, ETC SOP number EX411900, or latest revision.

Edits and Annotations
[illegible], PACE/NJ
8/9/95

Attachment 7.2.6.2 Ion Profile Chart

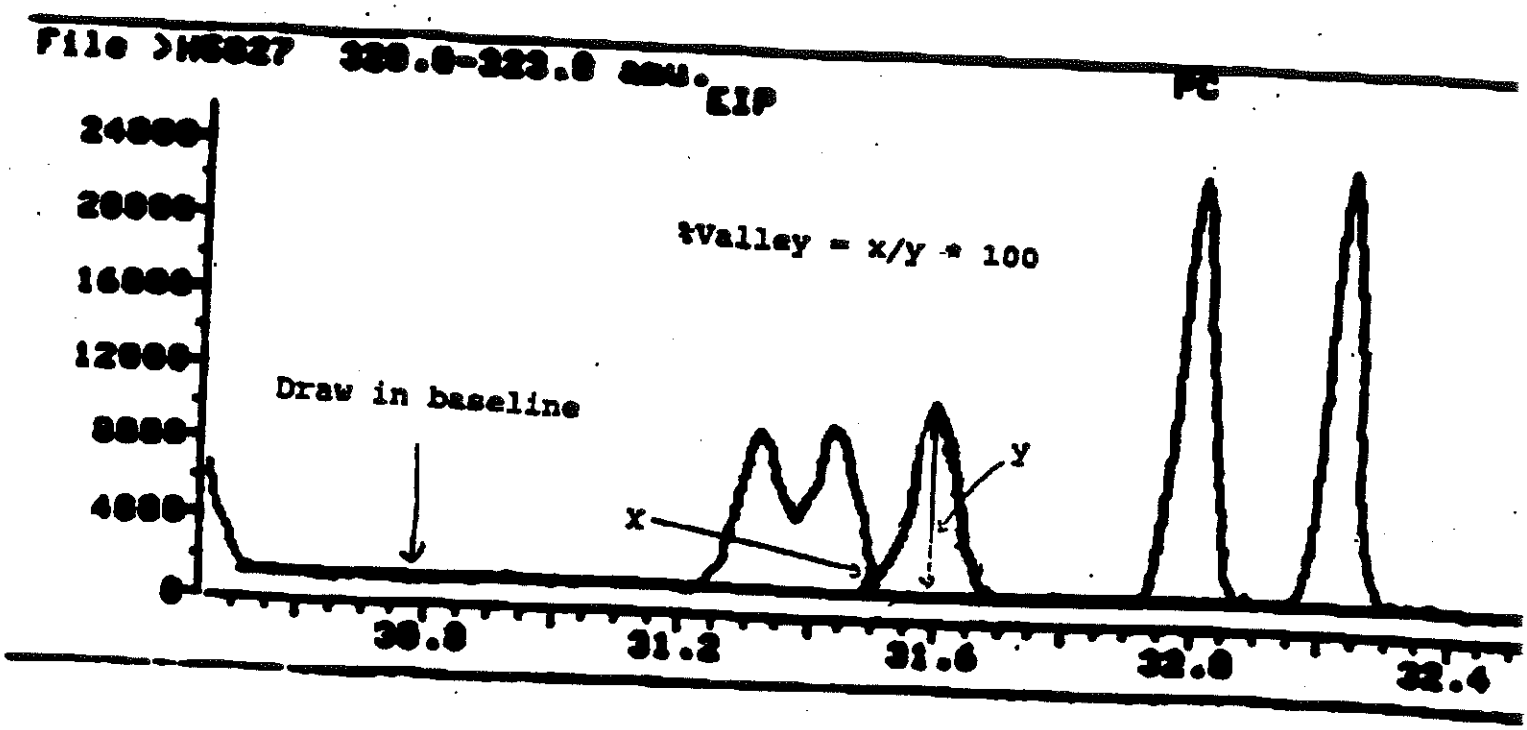

APPENDIX B

GP ENVIRONMENTAL SERVICES, INC.

Effective Date: September 1994
Version Number: 4
Initiated By:
Approved By:

SOP No.: 7.1

Title: Sample Chain-of-Custody Procedures

Scope: This Standard Operating Procedure describes the Chain-of-Custody procedures to be followed by Sample Control personnel.

I. Sample Receipt Chain-of-Custody

The appropriate Chain-of-Custody procedures must be observed for all samples received. Samples received from the Sample Management Office (SMO) must have a complete Chain-of-Custody (COC) record, since these samples result in data which must be legally defensible. Therefore, the following procedures must be followed upon the receipt of samples.

A. Sample receipt and inspection shall be performed as described in SOP 7.2, Sample Receipt, Inspection, Preservation and Storage Condition Requirements. The sample receipt shall be documented using the Sample Receipt Checklist, or for CLP samples CLP Form DC-1 (see SOP 7.2, Sample Receipt, Inspection, Preservation and Storage Condition Requirements, Figures 1 and 2, respectively, for examples).

B. After completing the sample inspection and documentation process and finding no discrepancies, the original form is retained and included in the respective project file. Upon receipt, the client's Chain-of-Custody Form is signed by Sample Custodians to document time and date. A copy is returned to the client or designated sample management agency.

C. Samples shall be logged into the Laboratory Information Management System (LIMS) as described in SOP 7.3 "Sample Logging and Record Keeping Procedures".

D. The Project Manager/Client Services Group shall be responsible for contacting the client (or SMO) to resolve any discrepancy or to report occurrences such as broken samples, improperly preserved samples, samples not listed on COC, insuffient sample volumes or inappropriate amounts or containers. The problem and the resolution shall be documented on the Sample Receipt Checklist Form.

II. Laboratory Chain-of-Custody

Equally important to sample receipt Chain-of-Custody procedures is laboratory Chain-of-Custody documentation.

A. Samples are requested from Sample Control through the use of the Sample Request Form (Figure 1). These forms are available from Sample Control and are completed by the analyst requesting samples. The form requires that the person requesting the samples enter their name, the date, time the samples are needed, and the date of the request. This information is located at the top of the page. The samples requested are documented by entering the samples' GP Number and the analysis. The location block is completed by the analyst after a work order has been transmitted. Once custody of the samples has been transferred, the Sample Coordinator notes the date and time the sample request was completed and signs the form. The form is retained only for the purpose of review by the Sample Control Supervisor for use in assessing work load, and then may be discarded.

B. When a request for samples is received by Sample Control, the Sample Custodian shall first locate the samples requested as listed in the Sample Log Book. The LIMS Fraction Sheet (see SOP 7.3, Sample Logging and Record Keeping, figures 2 and 3 for examples) lists all samples in each individual work order and the assigned locations. Transfers are documented on the COC form. All samples can be found at the assigned locations unless transferred to lab personnel. Transfers shall be documented on the in house Chain-of-Custody Form. The Chain-of-Custody document serves as an effective means in determining sample locations.

C. Once determining that samples are available for transfer, the sample custodian locates and removes the samples before placing on workbench. The identification of the samples is checked against the Sample Request Form, and the LIMS Chain-of-Custody Form. If the samples do not match the Sample Request Form or the LIMS Chain-of-Custody Form, the identity question must be resolved before any transfer can take place. If there are no problems, the samples are transferred to the analyst.

D. To transfer the samples to the laboratory the following information must be completed on the LIMS Chain-of-Custody Form.

- Fraction Id

  Enter the sample fraction Id designation for the samples being transferred. Since Chain-of-Custody Forms are work order specific only the two digit and one letter sample identifier need be entered.

- **Released By**

  Enter the name of the Sample Custodian releasing the samples.

- **Date/Time**

  Enter the date and time of the transaction.

- **Transferred To**

  Enter the name of the person the samples are being transferred to.

E. When samples are returned to Sample Control the change in custody must again be documented. The identification of the samples is checked versus the Chain-of-Custody to verify sample identity. The following information is completed on the same line previously used when the samples were initially logged out.

- **Accepted By**

  Enter the name of the Sample Custodian receiving the samples.

- **Date/Time**

  Enter the date and time of the transaction.

- **Disposition**

  Enter the disposition of the samples, i.e. returned to sample location. Empty sample containers are taken to the disposal area for proper discard.

F. Laboratory personnel accepting samples must take full responsibility for those samples. Samples must remain under the custody of that individual, and shall not be transferred to another chemist without documentation on the LIMS Chain-of-Custody Form.

G. When sample disposal is approved, or when a sample is completely consumed, the information shall be noted on the LIMS Chain-of-Custody Form. Empty sample containers should be returned to Sample Control for documentation and disposal.

III. Transfer of Sample Custody to Another Laboratory

When it becomes necessary to sub-contract sample analyses to another laboratory, custody of the sample(s) must be transferred to that laboratory in the form of a Chain-of-Custody Transfer for Subcontracted Analysis (Figure 2). The forms are available in the Sample Control office. Sample control will complete the information on the Chain-of-Custody regarding the name and address of the lab and the sample information. The Sample Custodian/Coordinator must sign and date the form to release custody of the sample(s), and retain a copy of the form in the Chain-of-Custody record corresponding to the sample(s). The Chain-of-Custody will accompany the samples in the sealed container being shipped to the sub-contracted lab. The individual responsible for the custody of the sample(s) will sign and date the record, return the document to GP Environmental Services, addressed to the Sample Control office and/or project manager. The returned Chain-of-Custody shall be placed in the data package being sent to client. A completed example is shown as Figure 3.

Figure 1

GP ENVIRONMENTAL SERVICES

SAMPLE REQUEST FORM

Requested By : _____ Date Requested : _____

Date Needed : _____ Time Needed : _____

GP Number	Analysis	Location	GP Number	Analysis	Location

Request Filled By : _____ Date/Time : _____

GP ENVIRONMENTAL SERVICES

CHAIN-OF-CUSTODY FORM

Sample Custody Transfer for Subcontracted Analysis

Samples Transferred From :
GP Environmental Services
202 Perry Parkway
Gaithersburg, MD 20877
(800) 926-6802

Samples Transferred To : _____

Attention : _____

GP Identification No.	Collection Date/Time	Matrix	Analysis Required	No. of Containers	Report Due Verbal	Report Due Written

Comments : _____

: _____

Carrier : _____

PO Number: _____

Condition Upon Receipt : _____

: _____

Relinquished by : (Signature)	Date/Time	Received By :	Date/Time :
Relinquished by : (Signature)	Date/Time	Received By :	

Please complete this Chain-of-Custody Form immediately upon receipt, retain a copy for subcontracting laboratory records and return the original to: GP Environmental Services, 202 Perry Parkway, Gaithersburg, Maryland 20877.

Figure 2

GP ENVIRONMENTAL SERVICES

CHAIN-OF-CUSTODY FORM

Sample Custody Transfer for Subcontracted Analysis

Samples Transferred From :
GP Environmental Services
202 Perry Parkway
Gaithersburg, MD 20877
(800) 926-6800

Samples Transferred To :
Mega Labs, Inc.
123 Maple Avenue
Boston, MA
Attention : John Chemist

GP Identification No.	Collection Date/Time	Matrix	Analysis Required	No. of Containers	Report Due Verbal	Report Due Written
9006007-01A	6/1/90 @ 0800	Water	601 + 602	4	6/7/90	6/14/90
9006010-01A	6/1/90 @ 1600	↓	↓	↓	↓	↓
9006018-02B	6/1/9 @ 2200	↓	↓	↓	↓	↓

Comments : Samples shipped on ice. Please check temperature upon receipt

Carrier : UPS Next Day Air

PO Number: L-12345

Condition Upon Receipt : Samples received on ice (Temperature = 0°C)

Relinquished by : (Signature)	Date/Time	Received By :	Date/Time :
Susan Analyst	6/2/90 1400	John Chemist	6/3/90 @ 0700
Relinquished by : (Signature)	Date/Time	Received By :	

Please complete this Chain-of-Custody Form immediately upon receipt, retain a copy for subcontracting laboratory records and return the original to: GP Environmental Services, 202 Perry Parkway, Gaithersburg, Maryland 20877.

Figure 3

GP ENVIRONMENTAL SERVICES, INC.

202 Perry Parkway
Gaithersburg, Maryland 20877
(301) 926-6802

Contract #/Billing Reference _____

_____ of _____ Pgs.

Project:
Client
Send Results To:
Address:
Phone:

Turnaround Time
# of Container
Container Type
Preservative Used
Type of Analysis

Sample ID#	Date	Time	Sample Matrix	Sampler's Initials											CLIENT COMMENTS

Relinquished By:	Date/Time	Received By:	Relinquished By:	Received for Laboratory By:	Date/Time
Relinquished By:	Date/Time	Received By:	Date/Time	Shipper:	Airbill No.:
Relinquished By:	Date/Time	Received By:	Lab Comments:		Temp:

GP ENVIRONMENTAL SERVICES

SAMPLE RECEIPT CHECKLIST

W.O. No. _____

Client Name _____

Date Received _____

Time Received _____

Received By _____

Carrier Name _____

Prepared (Logged In) By _____/_____
Initials Date

Project _____

Site _____

VOA Holding Blank I.D. No._____

	YES	NO
Airbill/Manifest Present? No. _____	__	__
Shipping Container in Good Condition?	__	__
Custody Seals Present on Shipping Container? Condition: Good ____ Broken ____	__	__
Chain-of-Custody Present?	__	__
Chain-of-Custody Agrees with Sample Labels?	__	__
Chain-of-Custody Signed?	__	__
Packing Present in Shipping Container? Type of Packing _____	__	__
Custody Seals on Sample Bottles? Condition: Good ____ Broken ____	__	__
Total Number of Sample Bottles _____		
Total Number of Samples _____		
Samples Intact?	__	__
Sufficient Sample Volume for Indicated Test?	__	__

	YES	NO
Trip Blanks Received? No. of Sets _____	__	__
VOA Vials Have Zero Headspace?	__	__
Preservatives Added to Sample?	__	__
pH Check Required? Performed By? _____	__	__
Ice Present in Shipping Container?	__	__

Container#	Temperature
_____	_____
_____	_____
_____	_____
_____	_____
_____	_____

Project Manager Contacted?
Name: _____
Date Contacted: _____

Any NO response must be detailed in the comments section below. If items are not applicable to particular samples or contracts, they should be marked N/A.

COMMENTS: _____

_____

_____

Checklist Completed by_____

Date_____

CHAIN OF CUSTODY FORM FOR SUBCONTRACTED ANALYSES

Page___of___

GP Environmental Services, Inc.
202 Perry Parkway
Gaithersburg, MD 20877
(301) 926-6802
(301) 840-1209 (Fax)

GP W.O. No._____

GP P.O. No._____

Samples Transferred To:
_____
_____
_____
Attn:_____
Phone:_____

GP Sample No.	Sample ID	Date Sampled	Time Sampled	Sample Matrix	Analyses Required	No. of Containers	Type of Container	Preser-vative	Comments

Carrier:_____ Airbill No:_____

Report Due On:_____ Send Report Attn:_____ Perform Q.C. on Sample:_____

Condition Upon Receipt:_____

Comments:_____

Samples Relinquished By:_____Date:_____Time:_____Samples Received By:_____Date:_____Time:_____

Please complete this Chain-of-Custody Form immediately upon receipt, retain a copy for subcontracting laboratory records and return the original to: GP Environmental Services, 202 Perry Parkway, Gaithersburg, Maryland 20877.