Baker Engineers

87-375

June 26, 1987

05/1035000 Fact
Van Tran Electric
SF/Lock

Mr. Dennis L. Newman
Project Manager
Remedial Project Management Section
Division of Land Pollution Control
2200 Churchill Road
Springfield, IL 62706

SUBJECT: PRELIMINARY ASSESSMENT FIELD INVESTIGATION
ANALYTICAL RESULTS
VANTRAN ELECTRIC CORPORATION - VANDALIA, ILLINOIS

Dear Mr. Newman:

In accordance with Article V, Paragraph B of the "CONSENT PLAN" entered into between VanTran Electric Corporation and the Illinois Environmental Protection Agency, and on behalf of our client, VanTran Electric Corporation, we are forwarding all available analytical results for the subject location.

Additionally, we have enclosed a log summarizing sample identification numbers, sampling date, sampling points and laboratories performing analysis. To simplify data review and interpretation, all results have been reduced and tabulated. Copies of analytical results tables are enclosed.

If there are any questions regarding this data, please contact me or Daniel Bradfield at 219/736-0263.

Very truly yours,

BAKER ENGINEERING, INC.

Ernest W. Brix, Jr.

Ernest W. Brix, Jr.
ENGINEERING MANAGER

EWB/DGB/rl

Enclosure

cc: Steve Parke
VanTran Electric Corporation

RECEIVED
JUN 30 1987
IEPA/DLPC

VANTRAN ELECTRIC CORPORATION
PRELIMINARY ASSESSMENT
PCB SURFACE WIPE SAMPLING/ANALYTICAL RESULTS

SAMPLE I.D. LOCATION	1000 COOLING RACK	1001 SW CORNER PAD	1002 W SIDE BACK PAD	1003 E SIDE BACK PAD	1004 TANK AREA	2003* SEDIMENT ON PAD
PARAMETER ug/wipe						
Aroclor 1016	<1	<1	<100	<100	<100	<5
Aroclor 1221	<1	<1	<100	<100	<100	<5
Aroclor 1242	<1	<1	<100	<100	<100	<5
Aroclor 1248	1	1	<100	<100	<100	50
Aroclor 1254	<1	<1	<100	<100	<100	5
Aroclor 1260	1	12	5280	4750	3670	120

*Sample #2003 was collected as a sediment sample, as the designated wipe location was disintegrated concrete, units of measure mg/kg.

VANTRAN ELECTRIC CORPORATION
PRELIMINARY ASSESSMENT
SHALLOW SOILS SAMPLING/ANALYTICAL RESULTS

SAMPLE I.D. LOCATION	2000 S OF LOADING DOCK	2001 W OF COOLING RACK	2002 NE OF PROD. BUILDING
PARAMETERS mg/kg			
Aluminum, Total	1300	8010	6590
Antimony, Total	<1.99	<2.00	<2.00
Arsenic, Total	1.35	6.65	4.53
Barium, Total	178	201	72.2
Beryllium, Total	0.129	0.349	0.289
Cadmium, Total	1.22	2.34	1.09
Calcium, Total	264000	4200	13700
Chromium, Total	6.03	19.6	11.4
Cobalt, Total	<1.99	5.09	3.69
Copper, Total	8.78	28.8	23.8
Iron, Total	7270	16200	12300
Lead, Total	44	72	29
Magnesium, Total	7330	2030	3030
Manganese, Total	640	695	277
Mercury, Total	<0.05	<0.05	<0.05
Nickel, Total	4.71	28.8	6.08
Potassium, Total	620	830	310
PCBs, Total	11	62	3
Aroclor 1016	<1	<1	<1
Aroclor 1221	<1	<1	<1
Aroclor 1242	<1	<1	<1
Aroclor 1248	1	48	<1
Aroclor 1254	<1	<1	<1
Aroclor 1260	10	14	3
Selenium, Total	<1.00	<0.998	<0.998
Silver, Total	<2.99	<2.99	<2.99
Sodium, Total	112	58.9	50.9
Solids, Total	96.3%	83.4%	83.6%
Thallium, Total	<1.00	<0.98	<0.98
Vanadium, Total	6.08	26.2	22.2
Zinc. Total	35.8	242	35.1

VANTRAN ELECTRIC CORPORATION
PRELIMINARY ASSESSMENT
MW-A SOIL SAMPLING/ANALYTICAL RESULTS

SAMPLE I.D. DEPTH INTERVAL	2004 0-1.5	2005 4.5-6.0	2006 9.0-10.5	2007 13.5-15	2008* 18-20
PARAMETERS mg/kg					
Aluminum, Total	784	4810	4110	931	764
Antimony, Total	<1.95	<1.99	<1.97	<1.87	<1.98
Arsenic, Total	1.15	2.35	3.15	1.13	1.88
Barium, Total	6.74	88.5	46.1	6.97	8.80
Beryllium, Total	<0.098	<0.100	0.217	<0.093	<0.099
Cadmium, Total	0.322	0.667	0.709	0.719	0.653
Calcium, Total	2240	1300	5040	2530	31500
Chromium, Total	3.00	8.05	14.4	2.59	2.47
Cobalt, Total	<1.95	<1.99	2.17	<1.87	1.98
Copper, Total	3.75	4.59	9.49	4.31	4.36
Iron, Total	5120	3600	5970	3830	2470
Lead, Total	<5.0	7.0	7.9	<5.0	11
Magnesium, Total	1030	722	851	1020	8780
Manganese, Total	138	24.4	42.4	133	153
Mercury, Total	<0.05	<0.05	<0.05	<0.05	<0.05
Nickel, Total	3.17	5.86	6.27	2.89	3.55
potassium, Total	300	750	810	730	300
PCBs, Total	<1	<1	<1	<1	<1
Aroclor, 1016	<1	<1	<1	<1	<1
Aroclor, 1221	<1	<1	<1	<1	<1
Aroclor, 1242	<5	<1	<1	<1	<1
Aroclor, 1248	<1	<1	<1	<1	<1
Aroclor, 1254	<1	<1	<1	<1	<1
Aroclor, 1260	<1	<1	<1	<1	<1
Selenium, Total	<0.391	<0.398	<0.394	<0.373	<0.396
Silver, Total	<2.93	<2.99	<2.96	<2.00	32.4
Sodium, Total	430	209	112	39.2	51.4
Solids, Total	86.4%	90.8%	89.2%	90.4%	82.5%
Thallium, Total	<0.97	<1.00	<0.96	<0.93	<0.88
Vanadium, Total	2.83	12.3	18.1	3.55	2.97
Zinc, Total	13.5	10.5	43.9	14.3	29.0
VOLATILE COMPOUNDS ug/kg					
Acetone	<10	67	2500	120	200
TENTATIVELY IDENTIFIED COMPOUNDS					
2-Propanol	ND	ND	290	22	11
SEMI-VOLATILE COMPOUNDS ug/kg	ND	ND	ND	ND	ND
UNKNOWN	ND	640	520	590	640

* - Split sample with IEPA representative.
ND - Not Detected.

VANTRAN ELECTRIC CORPORATION
PRELIMINARY ASSESSMENT
MW-C SOIL SAMPLING/ANALYTICAL RESULTS

SAMPLE I.D. DEPTH INTERVAL	2009 0-1.5	2010 6-7.5	2011 9-10.5	2012 12-13.5	2013D 12-13.5
PARAMETER mg/kg					
Aluminum, Total	13800	839	2120	806	1440
Antimony, Total	<1.86	<1.99	<1.96	<1.99	<1.92
Arsenic, Total	13.9	2.36	2.38	2.60	3.47
Barium, Total	85.6	158	18.6	5.68	14.9
Beryllium, Total	0.749	<0.098	0.098	0.139	0.096
Cadmium, Total	2.97	2.40	0.727	0.328	0.326
Calcium, Total	7780	2160	804	36100	34700
Chromium, Total	22.1	14.2	4.48	3.05	3.05
Cobalt, Total	4.29	<1.96	3.04	<1.99	2.02
Copper, Total	16.2	9.47	5.11	3.28	7.20
Iron, Total	27000	20500	11700	1740	4620
Lead, Total	24.2	11.9	<5.0	10	11
Magnesium, Total	3400	2970	733	8330	11300
Manganese, Total	385	319	210	121	128
Mercury, Total	<0.05	<0.05	<0.05	<0.05	<0.05
Nickel, Total	13.5	13.4	7.02	3.85	4.87
Potassium, Total	1500	810	470	530	460
PCBs, Total	<1	<1	1	<1	<1
Aroclor, 1016	<1	<1	<1	<1	<1
Aroclor, 1221	<1	<1	<1	<1	<1
Aroclor, 1242	<1	<1	1	<1	<1
Aroclor, 1248	<1	<1	<1	<1	<1
Aroclor, 1254	<1	<1	<1	<1	<1
Aroclor, 1260	<1	<1	<1	<1	<1
Selenium, Total	<0.37	<0.40	<0.99	<0.98	<0.97
Silver, Total	<2.79	<2.98	<2.95	<2.99	<2.88
Sodium, Total	153	186	45	94.5	105
Solids, Total	85.9%	85.1%	91.6%	84.5%	84.7%
Thallium, Total	<0.70	<0.75	<0.74	<0.75	<0.72
Tin, Total	<99.6	99.7	<99.5	<98.5	<93.4
Vanadium, Total	25.8	3.04	5.70	2.59	5.57
Zinc, Total	57.6	44.7	20.2	11.8	18.1
VOLATILE COMPOUNDS ug/kg					
Methylene Chloride	7	<5	<5	<5	5
Acetone	11	10	32	<10	120

ND - None detected.
** - Detected in laboratory blank.

VANTRAN ELECTRIC CORPORATION
PRELIMINARY ASSESSMENT
MW-C SOIL SAMPLING/ANALYTICAL RESULTS

SAMPLE I.D. DEPTH INTERVAL	2009 0-1.5	2010 6-7.5	2011 9-10.5	2012 12-13.5	2013D 12-13.5
UNKNOWN TENTATIVELY IDENTIFIED COMPOUNDS ug/kg	ND	ND	ND	ND	ND
SEMI-VOLATILE COMPOUNDS u/kg	ND	ND	ND	ND	ND
UNKNOWN/ TENTATIVELY IDENTIFIED COMPOUNDS ug/kg					
1,1,2,2-Tetrachloroethane	1000**	950**	760**	530**	760 **
Unknown	540**	580**	640**	ND	730 **
Unknown	ND	540**	ND	ND	ND

ND - None detected.
** - Detected in laboratory blank.

VANTRAN ELECTRIC CORPORATION
PRELIMINARY ASSESSMENT
BORING D SOIL SAMPLING/ANALYTICAL RESULTS

SAMPLE I.D. DEPTH INTERVAL	2025 0-1	2026 1-2	2027 2-3	2028 3-4	2029 4-5	2030 5-6	2031 6-7
PARAMETER mg/kg							
Aluminum, Total	6510	7270	11900	6160	8880	6610	6470
Antimony, Total	<1.95	<1.94	<1.98	<1.97	<1.99	<1.77	<1.98
Arsenic, Total	6.22	6.86	4.95	9.16	5.81	2.92	3.43
Barium, Total	103	138	103	254	177	121	114
Beryllium, Total	0.439	0.621	0.425	0.956	0.499	0.470	0.456
Cadmium, Total	1.80	1.00	1.91	1.63	1.63	2.48	0.614
Calcium, Total	24,900	1760	2910	1390	2560	952	1130
Chromium, Total	10.6	8.58	13.6	20.8	11.8	8.27	7.86
Cobalt, Total	5.27	6.89	5.24	21.5	9.17	5.94	2.87
Copper, Total	13.4	6.21	12.5	5.52	10.4	5.59	9.22
Iron, Total	11300	12400	19100	27000	19400	10900	6430
Lead, Total	66	16	19	44	26	11	7.9
Magnesium, Total	2260	719	216	813	1790	1100	1160
Manganese, Total	680	1030	351	3230	1410	562	264
Mercury, Total	<0.05	<0.05	0.051	<0.05	<0.05	<0.05	<0.05
Nickel, Total	8.85	6.50	10.7	10.7	10.1	7.31	8.20
Potassium, Total	1100	1500	1900	840	720	590	400
PCBs, Total	4	<1	<1	<1	<1	<1	<1
Aroclor, 1016	<1	<1	<1	<1	<1	<1	<1
Aroclor, 1221	<1	<1	<1	<1	<1	<1	<1
Aroclor, 1242	<1	<1	<1	<1	<1	<1	<1
Aroclor, 1248	<1	<1	<1	<1	<1	<1	<1
Aroclor, 1254	<1	<1	<1	<1	<1	<1	<1
Aroclor, 1260	4	<1	<1	<1	<1	<1	<1
Selenium, Total	<1.00	<0.98	<1.00	<0.99	<1.00	<0.96	<0.98
Silver, Total	<2.93	<2.91	6.30	<2.96	<2.99	<2.66	<2.97
Sodium, Total	115	57.3	193	109	174	163	161
Solids, Total	82.5%	85.2%	81.8%	83.0%	82.6%	83.6%	86.0%
Thallium, Total	<0.73	<0.73	<0.74	<0.74	<0.75	<0.67	<0.74
Tin, Total	<98.9	NA	NA	NA	NA	NA	NA
Vanadium, Total	19.7	22.6	25.3	48.0	27.6	19.3	12.9
Zinc, Total	143	22.2	50	32.1	33.5	19.1	26.7

** - Detected in Laboratory Blank
NA - Not analyzed for this parameter.
ND - Not detected.

VANTRAN ELECTRIC CORPORATION
PRELIMINARY ASSESSMENT
BORING D SOIL SAMPLING/ANALYTICAL RESULTS

SAMPLE I.D. DEPTH INTERVAL	2025 0-1	2026 1-2	2027 2-3	2028 3-4	2029 4-5	2030 5-6	2031 6-7
VOLATILE COMPOUNDS ug/kg							
Acetone	ND	ND	ND	ND	ND	13	16
SEMI-VOLATILE COMPOUNDS ug/kg	ND	ND	ND	ND	ND	ND	ND
UNKNOWN/ TENTATIVELY IDENTIFIED COMPOUNDS ug/kg							
1,1,2,2-Tetrachloroethane	810**	720**	620**	660**	680**	730**	750**
Unknown	950**	930**	770**	ND	610**	310	ND
Unknown	540	680	ND	ND	ND	ND	ND
Unknown	510	1300	ND	ND	ND	ND	ND
Unknown	950	390	ND	ND	ND	ND	ND
Unknown	2100	ND	ND	ND	ND	ND	ND

** - Detected in Laboratory Blank
NA - Not analyzed for this parameter.
ND - Not detected.

VANTRAN ELECTRIC CORPORATION
PRELIMINARY ASSESSMENT
MW-D SOIL SAMPLING/ANALYTICAL RESULTS

SAMPLE I.D. DEPTH INTERVAL	2032 0-1.5	2033 4.5-6	2034 9-10.5	2035 12-13.5
PARAMETER mg/kg				
Aluminum, Total	7900	12900	3030	2710
Antimony, Total	<1.84	<1.95	<1.97	<1.94
Arsenic, Total	8.08	7.58	2.79	0.96
Barium, Total	102	209	18.1	22.0
Beryllium, Total	0.404	0.498	0.197	0.126
Cadmium, Total	1.39	2.44	1.11	0.330
Calcium, Total	2500	2220	1970	19300
Chromium, Total	9.18	7.91	5.78	4.38
Cobalt, Total	5.88	<1.95	2.17	<1.94
Copper, Total	2.48	3.52	5.87	4.26
Iron, Total	13300	12600	20500	4300
Lead, Total	12	13	11	8.7
Magnesium, Total	1320	2410	11600	6790
Manganese, Total	405	57.3	144	110
Mercury, Total	<0.05	<0.05	<0.05	<0.05
Nickel, Total	10.1	15.1	7.42	6.14
Potassium, Total	620	1000	810	420
Selenium, Total	<0.37	<0.39	<0.39	<0.39
PCBs, Total	<1	<1	<1	<1
Aroclor, 1016	<1	<1	<1	<1
Aroclor, 1221	<1	<1	<1	<1
Aroclor, 1242	<1	<1	<1	<1
Aroclor, 1248	<1	<1	<1	<1
Aroclor, 1254	<1	<1	<1	<1
Aroclor, 1260	<1	<1	<1	<1
Silver, Total	<2.75	<2.93	5.56	4.10
Sodium, Total	321	215	90.7	83.5
Solids, Total	82.5%	82.0%	80.6%	81.1%
thallium, Total	<0.69	<0.73	<0.74	<0.73
Vanadium, Total	19.8	18.1	11.5	5.83
Zinc, Total	36.5	36.1	29.3	21.1
VOLATILE COMPOUNDS ug/kg				
Acetone	11	ND	ND	ND
SEMI-VOLATILE COMPOUNDS ug/kg	ND	ND	ND	ND
UNKNOWN/ TENTATIVELY IDENTIFIED COMPOUNDS ug/kg				
1,1,2,2-Tetrachloroethane	400 *	410 *	610 *	480 *
Unknown	400	530	420	820
Unknown	1600 *	900 *	650 *	1100 *
Unknown	ND	410 *	ND	ND

ND - Not detected.
* - Appeared in laboratory blank.

VANTRAN ELECTRIC CORPORATION
PRELIMINARY ASSESSMENT
BORING B SOIL SAMPLING/ANALYTICAL RESULTS

SAMPLE I.D. DEPTH INTERVAL	2036 0-1	2037 1-2	2038* 2-5	2039 5-8	2040D 5-8	2041 8-9	2042 9-10	2043 10-11	2044 11-12
PARAMETER mg/kg									
Aluminum, Total	9980	10100	5750	6380	5090	1730	1050	619	720
Antimony, Total	<0.98	<1.94	<1.92	<1.90	<1.79	<1.60	<1.66	<1.60	<1.91
Arsenic, Total	5.62	8.64	14.8	3.16	0.71	0.49	1.13	0.98	4.88
Barium, Total	96.5	140	78.5	23.8	20.7	23.7	10.1	12.5	8.15
Beryllium, Total	0.452	0.550	0.402	0.330	0.254	0.132	<0.095	<0.098	<0.095
Cadmium, Total	1.96	1.56	1.91	0.339	0.920	0.392	0.248	0.472	0.544
Calcium, Total	2480	1180	1390	250	4130	1310	569	522	559
Chromium, Total	19.1	16.4	17.8	5.31	4.29	6.74	2.95	3.47	3.20
Cobalt, Total	7.89	7.91	2.35	2.91	2.44	2.16	<1.91	<1.96	<1.90
Copper, Total	24.4	14.0	10.7	5.11	4.02	4.65	2.04	2.62	2.80
Iron, Total	17500	11400	16600	6890	7980	4700	2130	6110	3060
Lead, Total	48.5	12.3	10.4	<5.0	<5.0	<5.0	<10	<5.0	<5.0
Magnesium, Total	1870	1740	1890	1110	885	1070	441	422	433
Manganese, Total	239	223	269	148	157	37.8	30.2	219	92.1
Mercury, Total	<0.05	<0.05	<0.05	<0.05	<0.05	<0.05	<0.05	<0.05	<0.05
Nickel, Total	10.0	16.0	10.2	9.49	8.33	8.10	3.79	5.80	4.03
Potassium, Total	1750	1310	1270	725	227	490	121	221	234
PCBs, Total	85	23	15	<1	1	1	<1	<1	1
Aroclor, 1016	<5	<5	<1	<1	<1	<1	<1	<1	<1
Aroclor, 1221	<5	<5	<1	<1	<1	<1	<1	<1	<1
Aroclor, 1242	<5	<5	15	<1	1	1	<1	<1	<1
Aroclor, 1248	72	19	<1	<1	<1	<1	<1	<1	1
Aroclor, 1254	<5	<5	<1	<1	<1	<1	<1	<1	<1
Aroclor, 1260	13	4	<1	<1	<1	<1	<1	<1	<1
Selenium, Total	<0.96	<0.39	<0.39	<0.98	<0.39	<0.38	<0.38	<0.39	<0.38
Silver, Total	6.47	11.0	<2.88	<3.01	<2.80	<2.40	<2.48	<2.40	<2.87
Sodium, Total	82.0	120	72.1	207	184	197	118	114	98.4
Solids, Total	84.3%	85.4%	87.8%	90.9%	90.3%	93.4%	93.4%	94.8%	95.3%
Thallium, Total	<0.72	<0.72	<0.74	<0.73	<0.73	<0.70	<0.72	<0.73	0.92
Vanadium, Total	24.7	20.2	11.1	11.4	12.3	7.61	6.68	4.02	4.74
Zinc, Total	314	42.8	205	31.3	25.9	21.2	19.0	16.2	26.2

- Split sample with IEPA representative.
* - Detected in Laboratory Blank
D - Not detected.
A - Not analyzed for this parameter.

VANTRAN ELECTRIC CORPORATION
PRELIMINARY ASSESSMENT
BORING A SOIL SAMPLING/ANALYTICAL RESULTS

SAMPLE I.D. DEPTH INTERVAL	2045 0-1	2046 1-2	2047 2-5	2048D 2-5	2049* 5-8	2050 8-9	2051 9-10	2052 10-11	2053 11-12
VOLATILE COMPOUNDS ug/kg									
Acetone	NA	NA	ND	10000	8900	6700	37	2300	94
2-Butanone	NA	NA	87000	92000	36000	6300	<10	1600	93
Toluene	NA	NA	31000	3000	<50	<50	<50	<50	<50
Total Xylenes	NA	NA	<150	2600	<150	<150	<150	<150	<150
4-Methyl-2-Pentanone	NA	NA	<100	<100	230	<100	<100	<100	<100
UNKNOWN TENTATIVELY IDENTIFIED COMPOUNDS ug/kg									
2-Propanol	NA	NA	ND	570	1500	440	ND	360	ND
Acetic Acid, Methyl Ester	NA	NA	ND	86	290	ND	ND	ND	ND
2-Butanol	NA	NA	ND	560	520	450	ND	300	ND
Unknown	NA	NA	ND	52	87	ND	ND	ND	ND
Unknown	NA	NA	ND	100	ND	ND	ND	ND	ND
Unknown	NA	NA	ND	130	ND	ND	ND	ND	ND
2-Pentanone	NA	NA	ND	180	ND	71	ND	ND	ND
Unknown	NA	NA	ND	61	ND	ND	ND	ND	ND
Unknown	NA	NA	ND	190	ND	ND	ND	ND	ND
2-Methyl Propanol	NA	NA	ND	ND	56	ND	ND	ND	ND
1-Butanol	NA	NA	ND	ND	130	ND	ND	ND	ND
Acetic Acid, Butyl Ester	NA	NA	ND	ND	87	ND	ND	ND	ND

* - Split sample with IEPA representative.
NA - Not analyzed for this parameter.
ND - None detected.
** - Detected in laboratory blank.

VANTRAN ELECTRIC CORPORATION
PRELIMINARY ASSESSMENT
BORING B SOIL SAMPLING/ANALYTICAL RESULTS

SAMPLE I.D. DEPTH INTERVAL	2036 0-1	2037 1-2	2038* 2-5	2039 5-8	2040D 5-8	2041 8-9	2042 9-10	2043 10-11	2044 11-12
VOLATILE COMPOUNDS ug/kg									
Acetone	NA	NA	<2000	6800	10000	2900	260	60	<10
2-Butanone	NA	NA	200000	29000	21000	5000	190	94	<10
Toluene	NA	NA	850000	5800	150	<50	<50	<50	<5
Ethylbenzene	NA	NA	32000	<1000	<1000	<50	<50	<50	<5
Total Xylenes	NA	NA	120000	<3000	<3000	<150	<150	<150	<15
TENTATIVELY IDENTIFIED COMPOUNDS ug/kg									
2-Propanol	NA	NA	ND	ND	360	130	ND	ND	ND
Acetic Acid, Methyl Ester	NA	NA	ND	ND	130	ND	ND	ND	ND
2-Butanol	NA	NA	ND	ND	400	160	ND	ND	ND
Unknown	NA	NA	ND	ND	68	ND	ND	12	ND
Unknown	NA	NA	ND	ND	72	ND	ND	ND	ND
Unknown	NA	NA	ND	ND	93	ND	ND	ND	ND
SEMI-VOLATILE COMPOUNDS ug/kg									
Benzyl Alcohol	NA	NA	930	<1000	ND	ND	ND	ND	ND
Bis(2-Ethyl Hexyl) Phthalate	NA	NA	1000	<1000	ND	ND	ND	ND	ND

* - Split sample with IEPA representative.
** - Detected in Laboratory Blank
ND - Not detected.
NA - Not analyzed for this parameter.

VANTRAN ELECTRIC CORPORATION
PRELIMINARY ASSESSMENT
BORING B SOIL SAMPLING/ANALYTICAL RESULTS

AMPLE I.D. EPTH INTERVAL	2036 0-1	2037 1-2	2038* 2-5	2039 5-8	2040D 5-8	2041 8-9	2042 9-10	2043 10-11	2044 11-12
ENTATIVELY IDENTIFIED OMPOUNDS ug/kg									
ylene	NA	NA	21000	520	ND	ND	ND	ND	ND
ylene	NA	NA	6600	ND	ND	ND	ND	ND	ND
nknown Hydrocarbon	NA	NA	3000	650	ND	ND	ND	ND	ND
Butoxyl/Ethanol	NA	NA	1800	640	ND	ND	ND	ND	ND
nknown	NA	NA	7000	980	520	1300 **	1000 **	870 **	830 **
imethyl Benzene	NA	NA	1800	ND	ND	ND	ND	ND	ND
ecane	NA	NA	12000	760	ND	ND	ND	ND	ND
imethyl Benzene	NA	NA	4400	ND	ND	ND	ND	ND	ND
ndecane	NA	NA	5100	2200	ND	ND	ND	ND	ND
nknown	NA	NA	2700	3200	3600	ND	ND	ND	ND
ichloro-1,1'-Biphenyl	NA	NA	2100	ND	ND	ND	ND	ND	ND
nknown Benzene	NA	NA	1600	ND	ND	ND	ND	ND	ND
imethyl Benzene	NA	NA	2500	ND	ND	ND	ND	ND	ND
ichloro-1,1'-Biphenyl	NA	NA	2600	ND	ND	ND	ND	ND	ND
ichloro-1,1'-Biphenyl	NA	NA	1700	ND	ND	ND	ND	ND	ND
ichloro-1,1'-Biphenyl	NA	NA	4200	ND	ND	ND	ND	ND	ND
ichloro-1,1'-Biphenyl	NA	NA	1800	ND	ND	ND	ND	ND	ND
nknown	NA	NA	1600	740	1200	ND	ND	ND	ND
nknown	NA	NA	11000	1300	ND	ND	ND	ND	ND
nknown	NA	NA	11000	1700	ND	ND	ND	ND	ND
nknown Acid	NA	NA	ND	800	ND	ND	ND	ND	ND
nknown Hydrocarbon	NA	NA	ND	730	ND	ND	ND	ND	ND
odecane	NA	NA	ND	860	ND	ND	ND	ND	ND
1,2,2- etrachloroethane	NA	NA	ND	ND	ND	1200 **	ND	450 **	680 **

Split sample with IEPA representative.
- Detected in Laboratory Blank
D - Not detected.
A - Not analyzed for this parameter.

VANTRAN ELECTRIC CORPORATION
PRELIMINARY ASSESSMENT
BORING A SOIL SAMPLING/ANALYTICAL RESULTS

SAMPLE I.D. DEPTH INTERVAL	2045 0-1	2046 1-2	2047 2-5	2048D 2-5	2049* 5-8	2050 8-9	2051 9-10	2052 10-11	2053 11-12
PARAMETER mg/kg									
Aluminum, Total	7340	5930	4600	4120	9670	6630	1070	924	783
Antimony, Total	<1.76	<1.95	<1.93	<1.91	<1.81	<1.89	<1.97	<1.95	<1.99
Arsenic, Total	7.83	1.86	2.86	2.00	7.29	3.21	1.29	1.07	1.23
Barium, Total	74.6	61.4	83.1	79.8	56.8	31.7	15.3	12.6	15.6
Beryllium, Total	0.265	0.499	0.406	0.512	0.478	0.356	0.211	<0.093	<0.092
Cadmium, Total	2.07	1.69	2.22	1.77	0.940	1.06	0.750	1.91	0.648
Calcium, Total	2000	2270	1190	1210	1250	828	685	343	471
Chromium, Total	18.3	13.9	15.1	14.5	8.22	7.74	3.37	3.09	3.88
Cobalt, Total	9.14	3.79	3.19	4.06	2.63	2.89	2.02	<1.86	<1.84
Copper, Total	20.8	21.7	7.76	7.80	5.69	6.24	2.54	2.78	24.6
Iron, Total	17500	11000	20100	15700	6120	4330	1950	6680	6180
Lead, Total	170	73.1	13.5	16.3	8.1	4.7	<5.0	<5.0	<5.0
Magnesium, Total	1710	1580	1180	1180	915	1010	529	296	372
Manganese, Total	278	299	101	45.1	22.6	27.7	20.7	246	344
Mercury, Total	<0.05	<0.05	<0.05	<0.05	<0.05	<0.05	<0.05	<0.05	<0.05
Nickel, Total	10.2	7.60	12.1	10.2	8.46	8.03	3.88	5.58	3.81
Potassium, Total	1750	620	790	610	440	70	240	220	620
PCBs, Total	96	10	44	37	3	<1	<1	<1	<1
Aroclor, 1016	<5	<1	<5	<5	<1	<1	<1	<1	<1
Aroclor, 1221	<5	<1	<5	<5	<1	<1	<1	<1	<1
Aroclor, 1242	<5	<1	<5	<5	3	<1	<1	<1	<1
Aroclor, 1248	69	7	31	26	<1	<1	<1	<1	<1
Aroclor, 1254	<5	<1	<5	<5	<1	<1	<1	<1	<1
Aroclor, 1260	27	3	13	11	<1	<1	<1	<1	<1
Selenium, Total	<0.98	<0.39	<0.39	<0.38	<0.36	<0.38	<0.39	<0.39	<0.40
Silver, Total	<2.65	<2.93	<2.89	<2.87	<2.71	<2.84	<2.96	<2.93	<2.99
Sodium, Total	57.3	82.0	234	223	244	220	123	87.8	72.8
Solids, Total	82.1%	88.1%	84.7%	86.8%	87.4%	88.1%	91.9%	94.7%	94.1%
Thallium, Total	<0.74	<0.73	<0.72	<0.72	<0.68	<0.71	<0.74	<0.73	<0.75
Vanadium, Total	21.0	15.8	18.3	18.4	21.8	14.1	10.44	6.04	3.87
Zinc, Total	525	206	32.0	39.0	23.4	29.0	18.6	19.6	17.6

* - Split sample with IEPA representative.
NA - Not analyzed for this parameter.
ND - None detected.
** - Detected in laboratory blank.

VANTRAN ELECTRIC CORPORATION
PRELIMINARY ASSESSMENT
BORING A SOIL SAMPLING/ANALYTICAL RESULTS

SAMPLE I.D. DEPTH INTERVAL	2045 0-1	2046 1-2	2047 2-5	2048D 2-5	2049* 5-8	2050 8-9	2051 9-10	2052 10-11	2053 11-12
SEMI-VOLATILE COMPOUNDS u/kg									
Naphthalene	NA	NA	ND	830	ND	ND	ND	ND	ND
Bis(2-Ethyl Hexyl) Phthalate	NA	NA	ND	760	ND	ND	ND	ND	ND

* - Split sample with IEPA representative.
NA - Not analyzed for this parameter.
ND - None detected.
** - Detected in laboratory blank.

VANTRAN ELECTRIC CORPORATION
PRELIMINARY ASSESSMENT
BORING A SOIL SAMPLING/ANALYTICAL RESULTS

SAMPLE I.D. DEPTH INTERVAL	2045 0-1	2046 1-2	2047 2-5	2048D 2-5	2049* 5-8	2050 8-9	2051 9-10	2052 10-11	2053 11-12
UNKNOWN/ TENTATIVELY IDENTIFIED COMPOUNDS ug/kg									
Xylene	NA	NA	1600	6700	ND	ND	ND	ND	ND
Unknown Benzene	NA	NA	1900	980	ND	ND	ND	ND	ND
Unknown	NA	NA	2200	10000	1100	710	470 **	410	960 **
Decane	NA	NA	2200	7700	ND	ND	ND	ND	ND
Ethyl Methyl Benzene	NA	NA	1700	ND	ND	ND	ND	ND	ND
Unknown Hydrocarbon	NA	NA	1500	1700	870	ND	ND	ND	ND
Unknown Hydrocarbon	NA	NA	1500	1800	ND	ND	ND	ND	ND
Methyl(Methyl Ethyl) Benzene	NA	NA	2800	990	ND	ND	ND	ND	ND
Undecane	NA	NA	5400	6700	ND	ND	ND	ND	ND
Unknown Benzene	NA	NA	1100	1900	ND	ND	ND	ND	ND
Unknown Benzene	NA	NA	2000	ND	ND	ND	ND	ND	ND
Unknown	NA	NA	950	950	ND	490	560	ND	720 **
Unknown Hydrocarbon	NA	NA	930	1200	ND	ND	ND	ND	ND
Dodecane	NA	NA	2200	1800	ND	ND	ND	ND	ND
Unknown	NA	NA	1700	1100	11000	740	380 **	ND	ND
Unknown Hydrocarbon	NA	NA	2000	ND	ND	ND	ND	ND	ND
Unknown Hydrocarbon	NA	NA	1600	ND	ND	ND	ND	ND	ND
Xylene	NA	NA	ND	2400	ND	ND	ND	ND	ND
Trimethyl Benzene	NA	NA	ND	2200	ND	ND	ND	ND	ND
Trimethyl Benzene	NA	NA	ND	1200	ND	ND	ND	ND	ND
Methyl Propyl Benzene	NA	NA	ND	900	ND	ND	ND	ND	ND
Methyl (Methyl Ethyl) Benzene	NA	NA	ND	1900	ND	ND	ND	ND	ND
Unknown	NA	NA	ND	1000	1100	ND	ND	ND	ND
Unknown Tetrachloro-1,1'-Biphenyl	NA	NA	ND	1300	ND	ND	ND	ND	ND
1,1,2,2-Tetrachloroethane	NA	NA	ND	ND	ND	1200	580 **	1100	740 **

* - Split sample with IEPA representative.
NA - Not analyzed for this parameter.
ND - None detected.
** - Detected in laboratory blank.

VANTRAN ELECTRIC CORPORATION
PRELIMINARY ASSESSMENT
GROUNDWATER SAMPLING/ANALYTICAL RESULTS

SAMPLE I.D. MONITORING WELL DATE	3000 MW-D 5/13/87	3001 MW-C 5/13/87	3002 MW-A 5/13/87	3003 MW-B 5/13/87
PARAMETER mg/l				
Aluminum, Total	0.222	0.070	0.115	0.111
Antimony, Total	<0.020	<0.020	<0.020	<0.020
Arsenic, Total	<0.004	<0.004	<0.004	<0.004
Barium, Total	0.069	<0.050	<0.050	<0.050
Beryllium, Total	<0.001	<0.001	<0.001	<0.001
Cadmium, Total	0.041	0.010	0.013	<0.003
Calcium, Total	90.1	85.6	85.7	78.2
Chromium, Total	<0.020	<0.020	<0.020	<0.020
Cobalt, Total	<0.020	<0.020	<0.020	<0.020
Copper, Total	<0.020	<0.020	<0.020	<0.020
Iron, Total	1.40	0.387	0.421	0.567
Lead, Total	0.07	0.05	0.07	0.05
Magnesium, Total	30.2	30.6	27.6	23.0
Manganese, Total	0.018	0.018	0.014	0.032
Mercury, Total	<0.0005	<0.0005	<0.0005	<0.0005
Nickel, Total	0.023	<0.020	<0.020	<0.020
PCBs, Total	<0.001	<0.001	<0.001	<0.001
Aroclor 1016	<0.001	<0.001	<0.001	<0.001
Aroclor 1221	<0.001	<0.001	<0.001	<0.001
Aroclor 1242	<0.001	<0.001	<0.001	<0.001
Aroclor 1248	<0.001	<0.001	<0.001	<0.001
Aroclor 1254	<0.001	<0.001	<0.001	<0.001
Aroclor 1260	<0.001	<0.001	<0.001	<0.001
Potassium, Total	2.4	2.8	2.8	2.1
Selenium, Total	<0.004	<0.004	<0.004	<0.004
Silver, Total	<0.030	<0.030	<0.030	<0.030
Sodium, Total	27.1	47.4	29.3	19.1
Thallium, Total	<0.010	<0.010	<0.010	<0.010
Tin, Total	1.50	<1.00	<1.00	<1.00
Vanadium, Total	<0.010	<0.010	<0.010	<0.010
Zinc, Total	0.129	0.030	0.062	0.038
VOLATILE COMPOUNDS ug/l				
1,1,1-Trichloroethane	<5	<5	<5	10
SEMI-VOLATILE COMPOUNDS ug/l	ND	ND	ND	ND
UNKNOWN/TENATIVELY IDENTIFIED COMPOUNDS ug/l				
Unknown	13	3.8	9.9	6.7
Unknown	64*	81*	47*	29*
Unknown	20*	20*	14*	17*
Unknown	13*	24*	9*	13*

ND - None detected.
* - Detected in lab blank.

VANTRAN ELECTRIC CORPORATION
PRELIMINARY ASSESSMENT
DECONTAMINATION RINSATE SAMPLING/ANALYTICAL RESULTS

SAMPLE I.D. DRUM # DATE	3004 1 5/14/87	3005 2 5/14/87	3006 3 5/14/87	3007 8 5/14/87	3008 5 5/14/87	3009 9 5/14/87	3010 10 5/14/87
PARAMETER mg/l							
Aluminum, Total	0.388	0.099	0.045	0.217	0.067	<0.030	<0.030
Antimony, Total	<0.020	<0.020	<0.020	0.063	<0.020	<0.020	0.034
Arsenic, Total	<0.004	<0.004	<0.010	<0.010	<0.010	<0.004	<0.010
Barium, Total	<0.050	<0.050	<0.050	<0.050	<0.050	<0.050	<0.050
Beryllium, Total	<0.001	<0.001	<0.001	<0.001	<0.001	<0.001	<0.001
Cadmium, Total	0.007	0.065	0.006	0.007	0.006	0.005	0.005
Calcium, Total	60.3	12.8	14.3	45.9	39.5	43.0	18.6
Chromium, Total	0.063	<0.020	<0.020	<0.020	<0.020	0.021	<0.020
Cobalt, Total	<0.020	<0.020	<0.020	<0.020	<0.020	<0.020	<0.020
Copper, Total	0.027	0.040	<0.020	0.028	0.030	<0.020	<0.020
Iron, Total	<0.030	0.304	0.526	0.626	1.17	0.064	0.186
Lead, Total	0.05	0.05	0.05	0.10	0.05	0.05	0.05
Magnesium, Total	<0.200	4.19	18.7	12.7	25.4	0.300	17.3
Manganese, Total	<0.010	<0.010	0.008	0.108	0.155	<0.010	0.115
Mercury, Total	<0.0005	<0.0005	<0.0005	<0.0005	<0.0005	<0.0005	<0.0005
Nickel, Total	<0.020	<0.020	<0.020	<0.020	<0.020	<0.020	<0.020
PCBs, Total	0.002	0.027	<0.001	0.227	<0.001	<0.001	0.342
Aroclor 1016	<0.001	<0.001	<0.001	<0.1	<0.001	<0.001	<0.1
Aroclor 1221	<0.001	<0.001	<0.001	<0.1	<0.001	<0.001	<0.1
Aroclor 1242	0.001	0.013	<0.001	0.148	<0.001	<0.001	0.124
Aroclor 1248	<0.001	<0.001	<0.001	<0.1	<0.001	<0.001	<0.1
Aroclor 1254	<0.001	<0.001	<0.001	<0.1	<0.001	<0.001	<0.1
Aroclor 1260	0.001	0.014	<0.001	0.079	<0.001	<0.001	0.218
Potassium, Total	25	15	22	16	16	23	5.6
Selenium, Total	<0.004	<0.004	<0.010	<0.010	<0.010	<0.004	<0.010
Silver, Total	<0.030	<0.030	<0.030	<0.030	<0.030	<0.030	<0.030
Sodium, Total	163	603	508	869	800	118.2	506
Thallium, Total	<0.010	<0.010	<0.010	<0.010	<0.010	<0.010	<0.010
Tin, Total	<1.00	<1.00	<1.00	<1.00	<1.00	<1.00	<1.00
Vanadium, Total	0.016	0.045	<0.010	0.034	0.010	0.013	0.017
Zinc, Total	0.014	0.227	0.434	1.94	4.23	0.042	0.784

* - Estimated value less than detection limit.
** - Detected in lab blank.

VANTRAN ELECTRIC CORPORATION
PRELIMINARY ASSESSMENT
DECONTAMINATION RINSATE SAMPLING/ANALYTICAL RESULTS

SAMPLE I.D. DRUM # DATE	3004 1 5/14/87	3005 2 5/14/87	3006 3 5/14/87	3007 8 5/14/87	3008 5 5/14/87	3009 9 5/14/87	3010 10 5/14/87
VOLATILE COMPOUNDS ug/l							
Acetone	2000	12000	22000	490	47000	<1000	1900
Toluene	1000	<500	<500	<500	<500	<500	98
Chlorobenzene	<500	<500	<500	<250	<250	<500	78
UNKNOWN/TENATIVELY IDENTIFIED COMPOUNDS ug/l							
2-Propanol	23000	1900	9600	ND	12000	43000	ND
2-Butoxyethanol	ND	ND	ND	ND	ND	ND	150
SEMI-VOLATILE COMPOUNDS ug/l							
Phenol	18	<10	<10	<10	<10	<10	<10
Benzyl Alcohol	5.3*	12	<10	<10	3*	<10	<10
Naphthalene	9.1*	4*	<10	<10	<10	<10	<10
N-Nitrosodiphenylamine (1)	4.6*	<10	<10	4*	3*	<10	<10
Benzoic Acid	<50	23*	<50	<50	<50	<50	<10
Bis(2-Ethylhexyl) Phthalate	<10	50	27	10	17	<10	<10
1,3-Dichlorobenzene	<10	<10	<10	4*	<10	<10	8.7*
1,4-Dichlorobenzene	<10	<10	<10	76	<10	<10	160
1,2-Dichlorobenzene	<10	<10	<10	4*	<10	<10	7.0*
1,2,4-Trichlorobenzene	<10	<10	<10	41	<10	<10	46
Butyl Benzyl Phthalate	<10	<10	<10	9*	13	<10	<10
Di-N-Butyl Phthalate	<10	<10	<10	<10	4*	<10	<10

* - Estimated value less than detection limit.
** - Detected in lab blank.

VANTRAN ELECTRIC CORPORATION
PRELIMINARY ASSESSMENT
DECONTAMINATION RINSATE SAMPLING/ANALYTICAL RESULTS

SAMPLE I.D. DRUM # DATE	3004 1 5/14/87	3005 2 5/14/87	3006 3 5/14/87	3007 8 5/14/87	3008 5 5/14/87	3009 9 5/14/87	3010 10 5/14/87
UNKNOWN/TENTATIVELY IDENTIFIED COMPOUNDS ug/l							
Ethyl Benzene	5.8	-	-	-	-	-	-
Xylene	66	-	-	-	-	-	-
Xylene	35	-	-	-	-	-	-
2-Butoxyl Ethanol	8.9	-	-	-	-	-	-
Ethyl Methyl Benzene	5.3	-	-	-	-	-	-
Trimethyl Benzene	42	18	-	-	-	-	-
Trimethyl Benzene	11	-	-	-	-	-	-
2-Ethyl-1-Hexanol	6.7	27	19	-	11	30	-
Methyl (Methyl Ethyl) Benzene	7.5	-	-	-	-	-	-
Unknown Benzene	7.7	-	-	-	-	-	-
2-Ethyl Hexanoic Acid	27	-	-	-	-	-	-
2-(2-Butoxy Ethoxy)-Ethanol	16	-	-	-	-	-	-
Benzothiazole	18	16	22	-	14	-	-
4-Hydroxy-3-Methoxy-Benzaldehyde	8.3	-	-	-	-	-	-
Dodecanoic Acid	8.4	-	-	-	-	-	-
Hexadecanoic Acid	7.8	-	23	-	-	-	-
Unknown	33**	63	8.5	31**	8	84**	530
Unknown	6.9	46	54**	51**	60	7.3	370
Unknown	20**	49**	72**	-	8.6	42**	1200
Unknown	12**	74**	15**	-	35	5.5**	470
Dimethyl Benzene	-	31	-	-	-	-	-
Decane	-	25	-	-	-	-	-
Undecane	-	28	-	-	-	-	-
Methyl Decyl Benzene	-	21	16	34	14	-	-
Propyl Nonyl Benzene	-	15	-	-	9.1	-	-
Ethyl Decyl Benzene	-	18	15	-	13	-	-
Methyl Undecyl Benzene	-	43	24	42	24	-	-
Ethylundecyl Benzene	-	16	-	-	-	-	-
Methyl Dodecyl Benzene	-	15	-	-	-	-	-
Unknown	-	15**	-	-	7.7	4.6	690
Unknown	-	26	-	-	-	4.3	610

* - Estimated value less than detection limit.
** - Detected in lab blank.

VANTRAN ELECTRIC CORPORATION
PRELIMINARY ASSESSMENT
DECONTAMINATION RINSATE SAMPLING/ANALYTICAL RESULTS

SAMPLE I.D. DRUM # DATE	3004 1 5/14/87	3005 2 5/14/87	3006 3 5/14/87	3007 8 5/14/87	3008 5 5/14/87	3009 9 5/14/87	3010 10 5/14/87
UNKNOWN/TENTATIVELY IDENTIFIED COMPOUNDS ug/l							
Trichlorobenzene	-	-	-	46	-	-	-
Tetrachloro Benzene	-	-	-	51	-	-	-
Trichloro-1,1'-Biphenyl	-	-	-	28	-	-	-
Trichloro-1,1'-Biphenyl	-	-	-	30	-	-	-
Pentachloro-1,1'-Biphenyl	-	-	-	43	-	-	-
Pentachloro-1,1'-Biphenyl	-	-	-	41	-	-	-
Hexachloro-1,1'-Biphenyl	-	-	-	53	-	-	250
Hexachloro-1,1'-Biphenyl	-	-	-	65	-	-	-
Aroclor 1254	-	-	-	23	-	-	-
Aroclor 1254	-	-	-	27	-	-	-
Aroclor 1254	-	-	-	44	-	-	-
Hexachloro-1,1'-Biphenyl	-	-	-	49	-	-	-
Heptachloro-1,1'-Biphenyl	-	-	-	21	-	-	250
Heptachloro-1,1'-Biphenyl	-	-	-	20	-	-	180
Octachloro-1,1'-Biphenyl	-	-	-	18	-	-	-
Propyloctyl Benzene	-	-	-	-	8	-	-
Pentyl Heptyl Benzene	-	-	-	-	7.9	-	-
Butyloctyl Benzene	-	-	-	-	12	-	-
Butyl Nonyl Benzene	-	-	-	-	8.5	-	-
Unknown	-	-	-	-	-	5.9	1000
Unknown	-	-	-	-	-	7.1	200
Unknown	-	-	-	-	-	8.0	160
Unknown	-	-	-	-	-	-	590
Unknown	-	-	-	-	-	-	310
Unknown	-	-	-	-	-	-	210
Unknown	-	-	-	-	-	-	310
Unknown	-	-	-	-	-	-	200
Unknown	-	-	-	-	-	-	180
Octamethyl-Cyclotetrasiloxane	-	-	-	-	-	-	560
Decamethyl-Cyclopentasiloxane	-	-	-	-	-	-	250
Dodecamethyl-Cyclohexasiloxane	-	-	-	-	-	-	160

* - Estimated value less than detection limit.
** - Detected in lab blank.

ENVIRODYNE
ENGINEERS

12161 Lackland Road,
St. Louis, Missouri 63146
(314) 434-6960

June 26, 1987
3059-2000

Dennis Newman
Land Pollution Control
Illinois EPA
2200 Churchill Road
Springfield, Illinois 62706

Re: Van Tran Electric Sample Identification

Dear Dennis:

Enclosed is the information you requested by phone on Thursday, June 25. Included is a copy of the sample numbers with their site descriptions and other associated data. The sample identifiers are listed then on the two figures. Figure 1 depicts the soil sampling effort conducted by Baker/TSA from 4/20/87 through 4/27/87. The second figure shows the PCB points collected by Max Gricevich from our office and Greg Dunn of IEPA on May 13, 1987. Please refer to our May 19, 1987 correspondence regarding further site descriptions of the PCB samples.

Should you have any questions regarding this, please call me or Max Gricevich.

Sincerely,

Dale T. Cira
Environmental Scientist

DTC/jam/190
Enclosure

5

ENVIRODYNE ENGINEERS

Job No. _____ Project: _____

Subject: VAN TRAN SAMPLE COLLECTION SUMMARY

Sheet 1 of 2

By: _____ Date: _____ Ck: _____ Date: _____

ANALYSIS RECIEVED	DESIGNATED SAMPLE NUMBER	IEPA SPLIT NUMBER	DATE COLLECTED	ORIGIN OF SAMPLE	ANALYTES	LAB ANALYZING
	1000		4-20-87	WIPE SAMPLE - 3 STEEL BEAMS	PCB	GULF COAST (GCL)
	1001		4-20-87	SW ELEVATED PAD	PCB	GCL
	1002		4-20-87	W HALF BURNING PAD	PCB	GCL
	1003		4-20-87	E HALF BURNING PAD	PCB	GCL
	1004		4-20-87	TANK AREA - S PAD	PCB	GCL
	2000		4-21-87	GRAVEL DRIVEWAY	PCB, [redacted]	GCL
✓		2000A	4-21-87	GRAVEL DRIVEWAY	METALS, BNA FULL	ARDL, INC
	2001		4-21-87	WEST OF PAD - SOIL	FULL (no VOA)	GCL
	2002		4-21-87	NE CORNER DRAINAGE	FULL (no VOA)	GCL
	2003		4-21-87	CENTRAL PAD SEDIMENTS	PCB	GCL
	2004		4-21-87	MWA - 0-1.5 FT	FULL	GCL
✓		2004A	4-21-87	MWA 0-1.5	FULL	ARDL, INC
	2005		4-21-87	MWA 4.5-6.0	FULL	GCL
	2006		4-21-87	MWA 9.0-10.5	FULL	GCL
	2007		4-21-87	MWA 13.5-15.0	FULL	GCL
	2008		4-21-87	MWA 18.0-19.5 (screen)	FULL	GCL
✓		2008A	4-21-87	MWA 18.0-19.5 (screen)	FULL	ARDL
	2009		4-22-87	MWC 0-1.5	FULL	GCL
	2010		4-22-87	MWC 4.5-7.5	FULL	GCL
	2011		4-22-87	MWC 9.0-10.5	FULL	GCL
	2012		4-22-87	MWC 12.0-13.5 } DUPLICATE screen	FULL	GCL
	2013		4-22-87	MWC 12.0-13.5 } DUPLICATE screen	FULL	GCL
✓	2014		4-23-87	MWB 0-1.5	FULL	ARDL
✓	2015		4-23-87	MWB 4.5-6.0	FULL	ARDL
✓	2016		4-23-87	MWB 9.0-10.5	FULL	ARDL
✓	2017		4-23-87	MWB 13.5-15.0 - (screen)	FULL	ARDL
✓	2018		4-23-87	BORING C 0-1.0	FULL	ARDL
✓	2019		4-23-87	BORING C 1.0-2.0	FULL	ARDL
✓	2020		4-23-87	BORING C 2.0-3.0	FULL	ARDL
✓	2021		4-23-87	BORING C 3.0-4.0	FULL	ARDL
✓	2022		4-23-87	BORING C 4.0-5.0	FULL	ARDL
✓	2023		4-23-87	BORING C 5.0-6.0	FULL	ARDL
✓	2024		4-23-87	BORING C 6.0-7.0	FULL	ARDL

ENVIRODYNE ENGINEERS

Job No. _____ Project: _____
Subject: _____
Sheet 2 of 2
By: _____ Date: _____ Ck: _____ Date: _____

DESIGNATED SAMPLE NO.	IEPA SPLIT NO.	DATE COLLECTED	ORIGIN OF SAMPLE	ANALYTES	L&B
2025		4-23-87	BORING D 0-1.0 FT	FULL	GCL
2026		4-23-87	BORING D 1.0-2.0	FULL	GCL
2027		4-23-87	BORING D 2.0-3.0	FULL	GCL
2028		4-23-87	BORING D 3.0-4.0	FULL	GCL
2029		4-23-87	BORING D 4.0-5.0	FULL	GCL
2030		4-23-87	BORING D 5.0-6.0	FULL	GCL
2031		4-23-87	BORING D 6.0-7.0	FULL	GCL
2032		4-24-87	MWD 0-1.5	FULL	GCL
2033		4-24-87	MWD 4.5-6.0	FULL	GCL
2034		4-24-87	MWD 9.0-10.5	FULL	GCL
2035		4-24-87	MWD 12.0-13.5 (SCREEN)	FULL	GCL
2036		4-27-87	BORING A 0-1.0'	FULL	GCL
✓	2036A	4-27-87	BORING A 0-1.0'	FULL	ARDL
2037		4-27-87	BORING A 1.0-2.0	FULL	GCL
2038		4-27-87	BORING A 2.0-5.0'	FULL	GCL
✓	2038A	4-27-87	BORING A 2.0-5.0'	FULL	ARDL
2039		4-27-87	BORING A 5.0-8.0'	FULL	GCL
2040		4-27-87	BORING A 5.0-8.0 (DUPLICATE)	FULL	GCL
2041		4-27-87	BORING A 8.0-9.0	FULL	GCL
2042		4-27-87	BORING A 9.0-10.0	FULL	GCL
2043		4-27-87	BORING A 10.0-11.0	FULL	GCL
2044		4-27-87	BORING A 11.0-12.0	FULL	GCL
2045		4-27-87	BORING B 0-1.0	FULL	GCL
2046		4-27-87	BORING B 1.0-2.0	FULL	GCL
2047		4-27-87	BORING B 2.0-5.0	FULL	GCL
2048		4-27-87	BORING B 2.0-5.0 (DUPLICATE)	FULL	GCL
2049		4-27-87	BORING B 5.0-8.0	FULL	GCL
✓ ~~2050~~	2049A	4-27-87	BORING B 5.0-8.0	FULL	ARDL
2050		4-27-87	BORING B 8.0-9.0	FULL	GCL
2051		4-27-87	BORING B 9.0-10.0	FULL	GCL
2052		4-27-87	BORING B 10.0-11.0	FULL	GCL
2053		4-27-87	BORING B 11.0-12.0	FULL	GCL

ENVIRODYNE ENGINEERS

Job No. _____ Project: _____

Subject: _____

_____ Sheet ____ of ____

By: _____ Date: _____ Ck: _____ Date: _____

DESIGNATED SAMPLE No.	DATE COLLECTED	ORIGIN OF SAMPLE	ANALYSIS	LAB
1	6-13-87		PCB	ARDL
2	5-13		PCB	
3	5-13		PCB	
4	5-13		PCB	
5	5-13		PCB	
6	5-13		PCB	
7	5-13		PCB	
8	5-13		PCB	
9	5-13		PCB	
10	5-13		PCB	
11	5-13		PCB	
12	5-13		PCB	

ENVIRODYNE ENGINEERS

Job No. _____ Project: _____

Subject: _____

_____ Sheet _____ of _____

By: _____ Date: _____ Ck: _____ Date: _____

TOTALS. SAMPLES ANALYZED BY BAKER/CCL = 48

SAMPLES ANALYZED BY IEPA/ ARDL = 16 (includes 6 SPLITS)

PCB in SOILS ANALYZED BY ARDL = 12

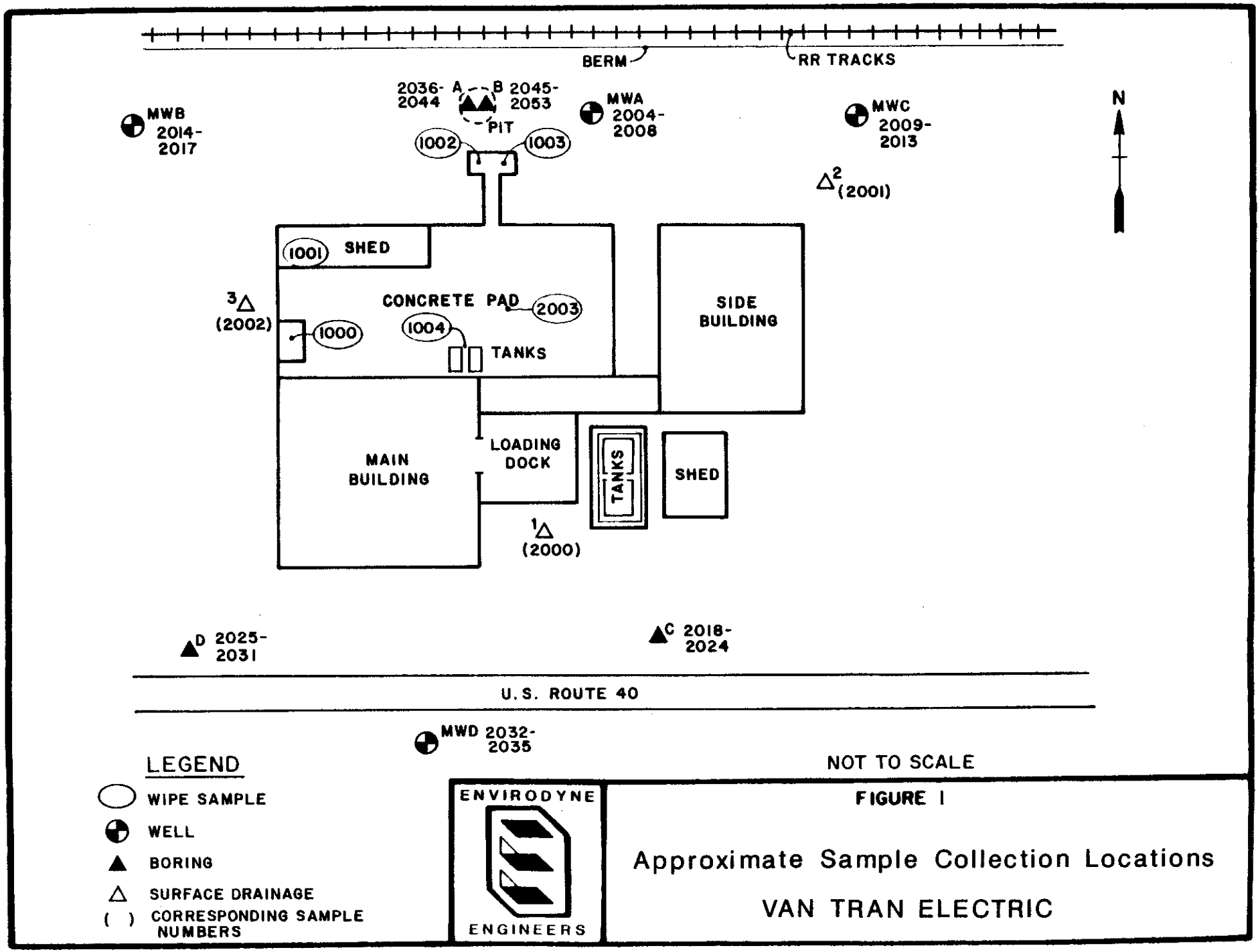

FIGURE 1

Approximate Sample Collection Locations

VAN TRAN ELECTRIC

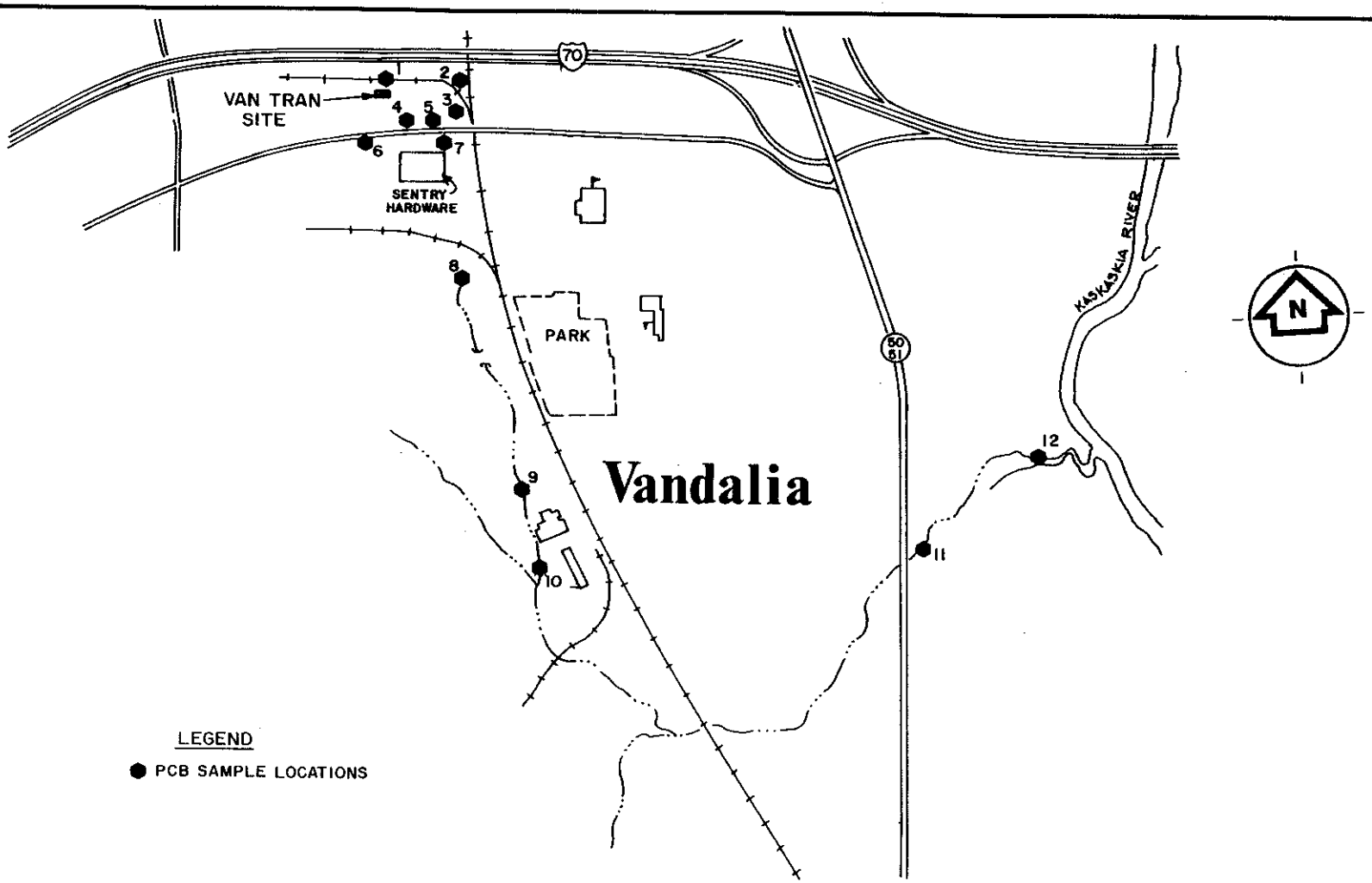

ENVIRODYNE ENGINEERS

FIGURE

Van Tran Off-Site Sediment Points 5-13-87

ENVIRODYNE ENGINEERS

FIELD BORING LOG

Sheet 1 of 1

FOR Van Tran Electric/IEPA

JOB NO. 3059-30000

LOCATION Vandalia, Illinois

ELEV.

BORING NO. MW-B

GROUND WATER: WHILE DRILLING / BEFORE DEVELOPMENT / AFTER DEVELOPMENT

DATE 4-23-87
TIME START 8:55 am
TIME END

DRILL CO. PSI
DRILLER Fernandez
LOGGER Cira

S.S. Dia 1½"
Weight 140#
Drop 30'

	SAMPLE NO.	BLOWS ON SAMPLER	DRIVE	RECOVERY		VISUAL FIELD CLASSIFICATION	GRAPHIC LOG	WELL CONSTRUCT	REMARKS
9:01	2014	6 6 8	18	18	1	Medium brown silty clay, tr. sand (v. fine) moist			ARDL Labs samples
	X	6 8 10	18	10	2	Medium brown silty clay, tr. sand (v. fine) moist - some gravel			9:00 am Purina was at in fire, no smoke in ditch area.
					3	gravelly, sandy clay - grey brown orange mottling			
	X	7 8 9	18	12	4				9;23 fire was out.
9:14	2015	10 9 9	18	18	5	Clayey fine sand red-orange to grey grading to medium sand last 0.2' some coarse gravel poorly sorted			
					6	Some coarse gravel poorly sorted			
	X	5 6 6	18	18	7	Light brown medium sand m. well sorted occ. small pebbles - moist			
	X	5 4 4	18	18	8	Yellow fine sand			grout
						Light brown-tan fine sand - well sorted			8'4"
					9				seal
9:30	2016	2 3 4	18	18	10	Light brown-tan fine sand - well sorted Light brown-tan fine sand - well sorted			9'11"
	X	6 5 5	18	18	11	Reddish-orange fine sand - well sorted Moist			silica sand
					12	Some black ribbonning at bottom 0.3'			
	X	3 3 3	18	15	13	12.8 Saturated	12.8		
9:45	2017	2 2 1	18	12	14	Medium brown fine to medium m. well/sorted sand Some fine gravel			
					15	Medium brown fine to medium m. well/sorted sand			natural cave-in
	X	5 5 6	18	18	16	Some fine gravel Medium brown fine to medium m. well/sorted sand			
	Shelby Tube				17	Some fine gravel Medium brown fine to medium m. well/sorted sand			Bottom of well
					18	Some fine gravel Medium brown fine to medium m. well/sorted sand Some fine gravel EOB 20½ in/Tube			

ENVIRODYNE ENGINEERS

FIELD BORING LOG

Sheet 1 of 1

FOR - Van Tran Electric/IEPA

JOB NO. MW-C

LOCATION Vandalia, Illinois

ELEV.

BORING NO. 3059-30000

GROUND WATER		DATE	DRILL CO.
WHILE DRILLING	11.5	4-22-87	PSI
BEFORE DEVELOPMENT		TIME START 3:30 pm	DRILLER Fernandez
AFTER DEVELOPMENT		TIME END 4:30 pm	LOGGER Cira

S.S. Dia 1½"
Weight 140
Drop 30"

SAMPLE NO.	BLOWS ON SAMPLER	DRIVE	RECOVERY		VISUAL FIELD CLASSIFICATION	GRAPHIC LOG	WELL CONSTRUCT	REMARKS
2009		18		1	Gravel fill in brown silty clay			
X	5 5 6	18	6	2				Grout loosing recov.
				3				
X	5 5 6	18	12	4				
2010	3 5 8	18	12	5	Medium brown clay - moist			Seal 13 1½ 5 4½
2010	12 14 15	18	10	6	Medium brown clay - stiff, moist			
				7	Grey Fine clayey silt w/fine sand			Silica Sand
X	20 23 28	18	10	8	Grey silt w/clay Wet			
				9	Brown silty clay Moist			
2011 X	6 5 5	18	10	10	Occasional gravel Reddish orange fine - medium sand - moist			Screen
X	3 4 6	18	15	11				
				12	Medium to coarse poorly sorted sands, fine gravel Wet			
2012 2013	5 7 7	18	12	13	Medium to coarse, poorly sorted sands, fine gravel			
TUBE		24		14				
				15				
				16	EOB - 15½'			
				17				
				18				
				19				
				20				

Composite

ENVIRODYNE ENGINEERS

WELL CONSTRUCTION DETAILS

Job No. 3059-30000 Boring No. MW-B

Date of Installation 4-23-87 Time Started 10:30 Time Completed 11:30

Ground Surface Elev. _____

All depth measurements of well detail are from ground surface unless otherwise indicated.

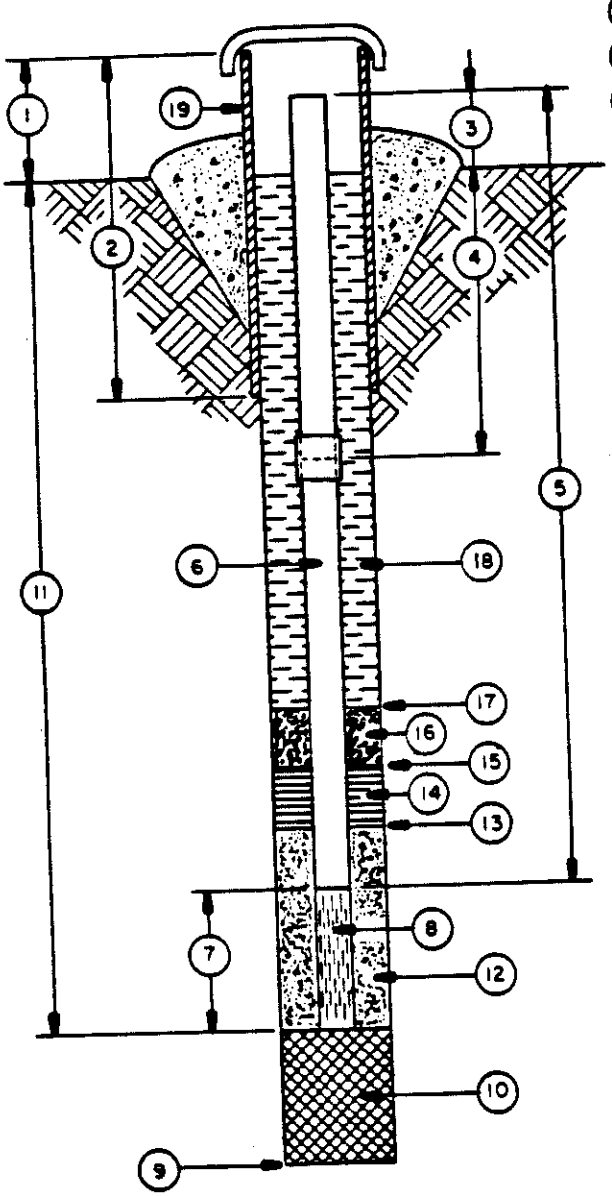

1. Height of Protective Casing Above Ground 27"
2. Total Length of Protective Casing 5.0'
3. Height of Standpipe Above Ground 27"
4. Depth to First Coupling 2'
   Coupling Interval 4½, 5' screen, 10', 2', 2'
5. Total Length of Blank Pipe 14'
6. Type of Blank Pipe No. 316 S.S. 2" ID
7. Length of Screen 5'
8. Type of Screen No. 316 SS, 0.01" preslot
9. Total Depth of Boring 20.5 Hole Diam. 8"
10. Type of Material cave-in natural sands
11. Depth to Bottom of Screen 17'10"
12. Type of Screen Filter natural cave-in & silica
    Quantity Used ½ bag
13. Depth to Top of Filter 9'11"
14. Type of Seal bentonite pellets
    Quantity Used ½ bucket
15. Depth to Top of Seal 8'4"
16. Type of Seal Weight N/A
    Quantity Used N/A
17. Depth to Top of Seal Weight N/A
18. Type of Grout
    Grout Mixture 1½ bag cement, ½ bag bentonite
19. Type of Protective Casing 4" ID round steel
    Concrete Collar Mixture hinge locking hasp

Remarks:

ENVIRODYNE ENGINEERS

FIELD BORING LOG

Sheet 1 of 1

FOR Van Tran Electric - IEPA

JOB NO. 3059-30000

LOCATION Vandalia, Illinois

ELEV.

BORING NO. MW-A

GROUND WATER			
WHILE DRILLING	15'	DATE	4-21-87
BEFORE DEVELOPMENT		TIME START	3:00 am
AFTER DEVELOPMENT		TIME END	7:40 am

DRILL CO. PSI
DRILLER Fernandez
LOGGER Cira

S.S. Dia 1.25"
Weight 140 #
Drop 30"

SAMPLE NO.	BLOWS ON SAMPLER	DRIVE	RECOVERY		VISUAL FIELD CLASSIFICATION	GRAPHIC LOG	WELL CONSTRUCT	REMARKS
2004A	3 4 3	18	12	1	Medium brown silty clay			Needed several drives to recover sample volume to split
X	6 6 7			2	Medium brown silty clay			3 3/4 IDHSA
				3	Medium brown silty clay			
X	3 4 7			4	Medium brown silty clay			
2005	11 12 12	18	18	5	Medium brown silty clay w/or. mottles Abundant - Sandy			5'10"
				6	Sand - medium some clay Light Grey - Dry			seal
X	8 11 12	18	18	7				
X	8 12 16	18	18	8	Reddish brown medium sand			2 bags w/cave-in
				9	Grey medium to coarse sand, slightly moist			
2006	6 14 12	18	10	10	Reddish & brown sand moist some grey at top			HNU 3-5
X	1 2 3	18	15	11	Reddish brown fine sands - moist			WD40 on threads of auger at 10' & 15' length.
				12	Reddish brown fine sands - moist			
X	5 3 3	18	15	13	Yellowish red fine sand - moist			
2007	3 2 2	18		14	Yellowish red fine sand - moist			
				15	Bottom - coarse light sand - wet			Natural Cave-in
X	5 5 8	18	18	16	Medium - coarse sand - saturated			
X	7 13 17	18	18	17	Medium - coarse sand - some fine gravels Medium brown - rounded gravels			
				18				
2008A	6 10 16	24	24	19	Medium - coarse sand - some fine gravels Medium brown - rounded gravels			4' blow-in
				20				22'

ENVIRODYNE ENGINEERS

WELL CONSTRUCTION DETAILS

Job No. 3059-30000 Boring No. MW-C

Date of Installation 4-22-87 Time Started 4:30 Time Completed 6:00

Ground Surface Elev. _____

All depth measurements of well detail are from ground surface unless otherwise indicated.

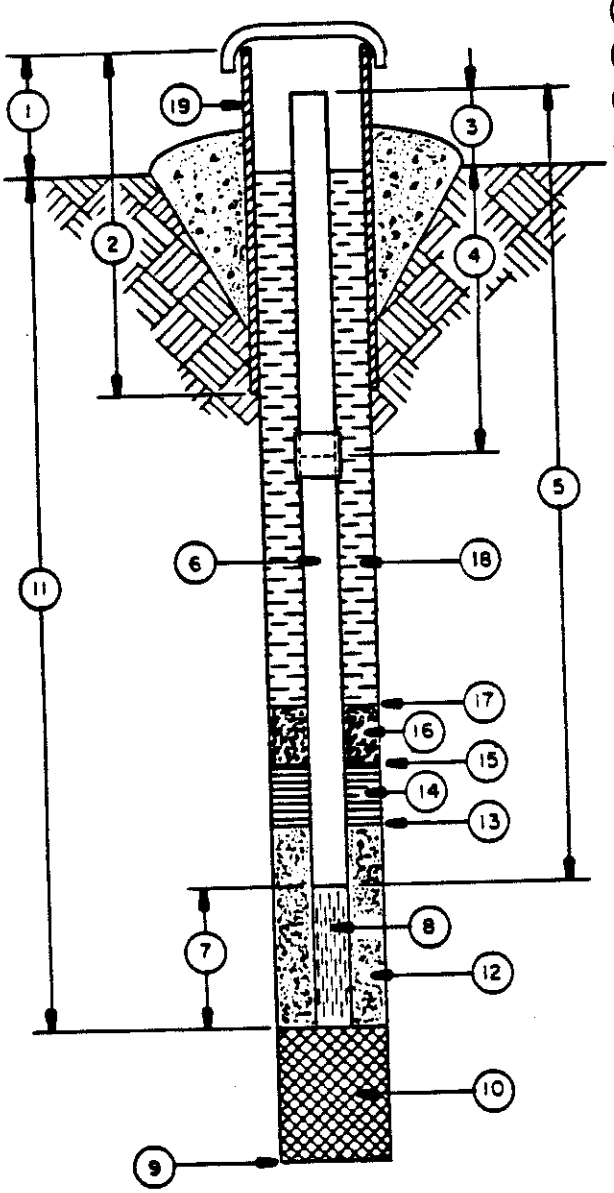

1. Height of Protective Casing Above Ground 34"
2. Total Length of Protective Casing 5'
3. Height of Standpipe Above Ground 32"
4. Depth to First Coupling 8"
   Coupling Interval 2', 10' pipes
5. Total Length of Blank Pipe 13' 1½"
6. Type of Blank Pipe No. 316SS 2" ID
7. Length of Screen 4'11½" w/4½" plug
8. Type of Screen No. 316 SS. 0.01" Preslot
9. Total Depth of Boring 15½ Hole Diam. 8"
10. Type of Material Natural sand cave-in
11. Depth to Bottom of Screen 14'7" and 4½" plug = 14'11½"
12. Type of Screen Filter Ottawa silica sand -fine
    Quantity Used 1 bag
13. Depth to Top of Filter 7'2"
14. Type of Seal bentonite pellets
    Quantity Used ½ bucket
15. Depth to Top of Seal 5.0'
16. Type of Seal Weight N/A
    Quantity Used N/A
17. Depth to Top of Seal Weight N/A
18. Type of Grout Portland/Powder bentonite
    Grout Mixture 50% bentonite, 7:1 water
19. Type of Protective Casing locking, 4" diameter
    Concrete Collar Mixture _____

Remarks:

Added sand (½ bag) through augers, well came up when augers were pulled, sand bridged decided to pull augers, while holding down w/hydraulic pressure.

ENVIRODYNE ENGINEERS

WELL CONSTRUCTION DETAILS

Job No. 3059-30000 Boring No. MW-A

Date of Installation 4-21-87 Time Started 6:05 Time Completed 7:40

Ground Surface Elev. _____

All depth measurements of well detail are from ground surface unless otherwise indicated.

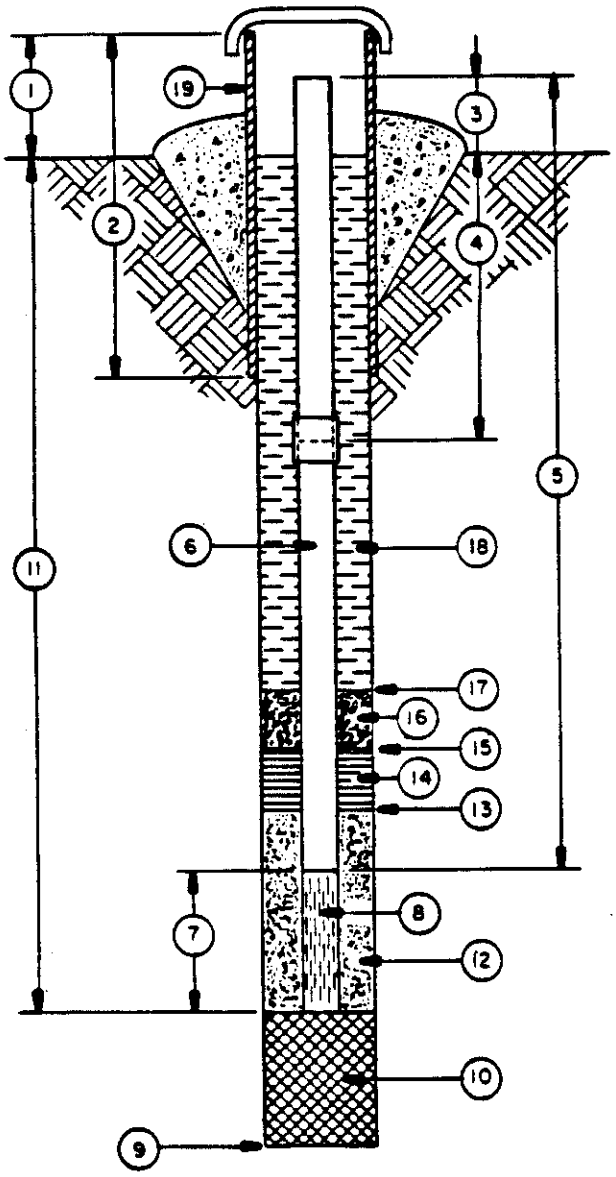

1. Height of Protective Casing Above Ground 3.5'
2. Total Length of Protective Casing 5.0'
3. Height of Standpipe Above Ground 3.5'
4. Depth to First Coupling 6.5'
   Coupling Interval 10.0'/10.0/0.3' CAP
5. Total Length of Blank Pipe 20.3
6. Type of Blank Pipe No. 316 S.S. 2" ID
7. Length of Screen 5.0' w/.3' PLUG
8. Type of Screen 0.01" SLOT-FACTORY
9. Total Depth of Boring 22' Hole Diam. 8"
10. Type of Material Medium to coarse natural cave sands
11. Depth to Bottom of Screen 22.1'
12. Type of Screen Filter Natural cave sands w/fine silica
    Quantity Used 2 bags
13. Depth to Top of Filter 7'4"
14. Type of Seal Bentonite pellets
    Quantity Used ½ pail
15. Depth to Top of Seal 5' 10"
16. Type of Seal Weight N/A
    Quantity Used N/A
17. Depth to Top of Seal Weight N/A
18. Type of Grout Portland w/5% bentonite
    Grout Mixture _____
19. Type of Protective Casing _____
    Concrete Collar Mixture _____

Remarks:

4 ft. sand plug - attempting removal w/s. tubes. Pushed 2' out, advancing augers ahead of screen to push out, removed 5' of auger. 14'2" to top of cave-in.

ENVIRODYNE ENGINEERS

FIELD BORING LOG

Sheet 1 of 1

FOR -Van Tran Electric/IEPA

JOB NO. 3059-30000

LOCATION (West ½ of pit) - Vandalia, Illinois ELEV. _____

BORING NO. A

GROUND WATER			
WHILE DRILLING	Not encountered	DATE	4-27-87
BEFORE DEVELOPMENT		TIME START	9:50
AFTER DEVELOPMENT		TIME END	12:30

DRILL CO. PSI
DRILLER Fernandez
LOGGER Cira

S.S. Dia 1½"
Weight 140#
Drop 30"

SAMPLE NO.	BLOWS ON SAMPLER	DRIVE	RECOVERY		VISUAL FIELD CLASSIFICATION	GRAPHIC LOG	WELL CONSTRUCT	REMARKS
	4 7			1	Medium brown sicl - sample HNU max 50 ppm		N/A	500 ppm in hole (4 drives for volume)
	8 9			2	Medium brown sicl - sample HNU max 60 ppm			200-300 HNU
	6 8 10			3	Medium brown sicl - moist			
	6 12 8			4	becomming sandy HNU - 500-1000 last 1 - foot			
				5	grey sandy clay, med. sand mixed - mottling			
	6 12 18			6	Sandy clay - reddish brown 50% sand 500-1000 ppm Sandy clay - reddish brown 50-100 ppm		grout to surface.	
	7 7 8			7	Reddish orange, medium sand 20-30 ppm			Approx. 3-4 ppm in breathing zone
				8	Reddish orange, medium sand 40-50			
	4 6			9	Reddish orange, medium sand avg. 7 max 50			borehole approx. 100 ppm
	4 4			10	Reddish orange, medium sand			
	3 4			11	Reddish orange, medium sand 5-10 ppm			70 ppm downhole
	4 4			12	Reddish orange, medium sand 0-2 ppm			10 ppm down bore

E.O.B. = 12.0'

began pulling augers straight up, but it began to break ground 5' radius from boring resorted to turning augers while pulling.

Grouted boring through augers w/rig pump Mixed ½ bentonite, ½ cement. Approximately 1 bag @.

ENVIRODYNE ENGINEERS

FIELD BORING LOG

Sheet 1 of 1

FOR Van Tran Electric/IEPA

JOB NO. 3059-30000

LOCATION Vandalia, Illinois (East ½ of pit) ELEV. _____ BORING NO. B

GROUND WATER			
WHILE DRILLING	N/E	DATE	4-27-87
BEFORE DEVELOPMENT		TIME START	1:15 am
AFTER DEVELOPMENT		TIME END	2:50

DRILL CO. PSI
DRILLER Fernandez
LOGGER Cira

S.S. Dia 1½"
Weight 140#
Drop 30"

SAMPLE NO.	BLOWS ON SAMPLER	DRIVE	RECOVERY		VISUAL FIELD CLASSIFICATION	GRAPHIC LOG	WELL CONSTRUCT	REMARKS
2045	3 8	12	2x 8	1	Medium brown silty clay (2 drives for volume)		grouted to surface - no well	500 ppm in sple. 500-600 ppm in sple.
2046	9 7	12	10	2	Medium brown silty clay			
2047-48 Dup.	7 7 9	18	18	3	Medium brown silty clay			300 ppm sple.
	4 5 8	18	18	4	Grading to increased sand			50-200 ppm sple. 15-10 in auger
				5	Sandy clay - orangish brown, stiff			
2049 & A	3 5 9	18	18	6				80 ppm sple.
	2 4 5	18	18	7	Clayey sand, orangish brown			3 ppm sple.
				8	Medium clayey sand			
2050	2 6	12	12	9	Light yellow/red well sorted medium sand-loose			
2051	7 3	12	12	10	Light yellow/red well sorted medium sand-loose			0 ppm sple.
2052	2 3	12	10	11	Reddish orange, well sorted medium sand - loose			0 ppm sple.
2053	4 4	12		12	Reddish orange, well sorted medium sand - loose			5 ppm sple.
					12.0' E.O.B.			

ENVIRODYNE ENGINEERS

FIELD BORING LOG

Sheet 1 of 1

FOR -Van Tran Electric/IEPA

JOB NO. 3059-30000

LOCATION Vandalia, Illinois

ELEV.

BORING NO. C

GROUND WATER			
WHILE DRILLING	Not encountered	DATE	4-23-87
BEFORE DEVELOPMENT		TIME START	2:46
AFTER DEVELOPMENT		TIME END	3:30

DRILL CO. PSI

DRILLER Fernandez

LOGGER Cira

S.S. Dia 1½"

Weight 140#

Drop 30"

	SAMPLE NO.	BLOWS ON SAMPLER	DRIVE	RECOVERY		VISUAL FIELD CLASSIFICATION	GRAPHIC LOG	WELL CONSTRUCT	REMARKS
2:46	2018	5 4	12	8	1	Medium brown - silt - trace clay			HNU: 20-30 ppm in hole 3 drives.
3:00	2019	2 2	12	6	2	Grey wet clayey sand			HNU: 200 ppm 2 drives
3:03	2020	2 6	12	10	3	Grey clay; wet			30 ppm
3:06	2021	4 7	12	12	4	Grey clay w/mottling; wet			38 ppm
3:12	2022	2 3	12		5	Stiff grey brown clay - orange mottling; wet			
3:16	2023	7 10	12		6	Grey to tan fine sand w/some clay			
3:22	2024		12		7	Grey sandy clay			65 ppm
					8	Tan fine sand, well sorted			
						7.0' E.O.B.			
						Water at 8.2			

ENVIRODYNE ENGINEERS

FIELD BORING LOG

Sheet 1 of 1

FOR -Van Tran Electric/IEPA

JOB NO. 3059-30000

LOCATION Vandalia, Illinois

ELEV.

BORING NO. D

GROUND WATER			
WHILE DRILLING	Not encountered	DATE	4-13-87
BEFORE DEVELOPMENT		TIME START	5:00 pm
AFTER DEVELOPMENT		TIME END	5:53 pm

DRILL CO. PSI

DRILLER Fernandez

LOGGER Cira

S.S. Dia 1½"

Weight 140#

Drop 30

	SAMPLE NO.	BLOWS ON SAMPLER	DRIVE	RECOVERY		VISUAL FIELD CLASSIFICATION	GRAPHIC LOG	WELL CONSTRUCT	REMARKS
	2025	5 4	12		1	Gravel fill in clay - medium brown			HNU readings
	2026	4 4	12	8	2	Medium brown/grey silty clay, some sandy abund. Fe staining/mottles			Moved 15' East in ditch.
5:33	2027	4 5	12	12	3	No recovery - Same as above Moved location			
	2028	4 4	12	10	4	Medium brown sandy clay (medium text sand)			
	2029	6 5	12	12	5	Grey fine sandy silt - mottling - wet Moderate stiff loess			
	2030	4 7	12	12	6	Occasional coarse sand, stiff, mottling -wet Occasional coarse sand, stiff, mottling -wet			
5:53	2031	11 11	12	12	7	7.0' E.O.B.			
					8	Estimated water table 8.2' B.G.L. measured at southern most Monitoring Well in pm			

ENVIRODYNE ENGINEERS

FIELD BORING LOG

FOR Van Tran Electric/IEPA — JOB NO. 3059-30000

LOCATION Vandalia, Illinois — ELEV. ____ — BORING NO. MW-D

GROUND WATER		DATE 4-24-87	DRILL CO. PSI
WHILE DRILLING		TIME START 2:20 pm	DRILLER Fernandez
BEFORE DEVELOPMENT		TIME END	LOGGER Cira
AFTER DEVELOPMENT			

S.S. Dia 1½" ID; Weight 140#; Drop 30"

	SAMPLE NO.	BLOWS ON SAMPLER	DRIVE	RECOVERY		VISUAL FIELD CLASSIFICATION	GRAPHIC LOG	WELL CONSTRUCT	REMARKS
	2032	3 4 6	18	15	1	Grey brown silt-orange mottling (Loess)			
	X	5 4 4	18	18	2	Clayey silt-mottled			
					3	Clayey silt-mottled			
	X	3 4	18	12	4	Clayey silt-mottled			
2:45	2033	5 5 7	18	18	5	Grey clay, mottled			
					6	w/gravel & coarse sand Grading to medium fine sand			
	X	5 7 8	18	18	7	Gravelly, sandy clay			
3:03	2034	4 6 3	18	18	8	Reddish brown medium fine sand, mod. well sorted			
					9	Grey medium sand moderately well sorted saturated, some clay, occasional gravel			
	X	2 2 3	18	18	10				
3:10	2035	6 3 4	18	18	11	Becomming poorly sorted, zones of oxidation red			
					12	Becomming poorly sorted, zones of oxidation red			
3:17	Tube	1 3 6	18	18	13				
					14				
					15				Estimated bottom of well @ 14' bgl.
					16				Will regrout boring to 15', then reauger hole to set well.
					17				
					18				
					19				
					20				

ENVIRODYNE ENGINEERS

FIELD BORING LOG

FOR Van Tran Electric/IEPA — JOB NO. 3059-30000

LOCATION Vandalia, Illinois — ELEV. ____ BORING NO. ____

GROUND WATER		DATE 4-24-87	DRILL CO. PSI
WHILE DRILLING	9'	TIME START 2:20 am	DRILLER Fernandez
BEFORE DEVELOPMENT		TIME END	LOGGER Cira
AFTER DEVELOPMENT			

S.S. Dia 1½" Weight 140# Drop 30'

SAMPLE NO.	BLOWS ON SAMPLER	DRIVE	RECOVERY		VISUAL FIELD CLASSIFICATION	GRAPHIC LOG	WELL CONSTRUCT	REMARKS
	11 21 32	18	18	21	Moderate well sorted, fine medium sand - saturated			Blow-in?
	augered to 25			22 23 24 25				
	1 1 1			26	Fine red brown sand - well sorted			
	augered to 30			27 28 29 30				
	9 14 11			31	Fine red brown sand - well sorted			
	augered to 35			32 33 34 35				Blow-in removing w/spoon
	17 99 —			36	Blue to light grey, very dense clay			DTC left site at 4:23 - drillers trying to remove blow-in.
	augered to 40'			37 38	40-41½ Light grey, medium grained sand medium brown, medium grained sand			*grease added to hose fitting & residual anti-freeze flushed down boring.
	30 89 49			39 40				

ENVIRODYNE ENGINEERS

FIELD BORING LOG

FOR Van Tran/IEPA

JOB NO. 3059-30000

LOCATION Vandalia, Illinois ELEV. _____ BORING NO. D

GROUND WATER		DATE 4-26-87	DRILL CO. PSI
WHILE DRILLING		TIME START 9:30	DRILLER Ralph
BEFORE DEVELOPMENT		TIME END	LOGGER GMB
AFTER DEVELOPMENT			

S.S. Dia 1.5" Weight 140# Drop 30"

SAMPLE NO.	BLOWS ON SAMPLER	DRIVE	RECOVERY		VISUAL FIELD CLASSIFICATION	GRAPHIC LOG	WELL CONSTRUCT	REMARKS
				45	Well sorted, gray medium sand (SW) grading into very fine grey well sorted quartz sand w/clay matrix - gray silty clay			
	34 50 43	18"	9"					
				50	Dense, gray silty clay			
	40 37 100	18	15					
				55	Dense grey silty clay, trace well rounded, poorly sorted quartz grains & black shale			
	36 48 63	15	15					
				60	Dense grey, fine sandy silty clay, trace well rounded quartz grains			
	17 35 54	18	12					

ENVIRODYNE ENGINEERS

FIELD BORING LOG

FOR - Van Tran/IEPA

JOB NO.

LOCATION Vandalia, Illinois

ELEV.

BORING NO.

GROUND WATER			
WHILE DRILLING		DATE	DRILL CO. PSI
BEFORE DEVELOPMENT		TIME START	DRILLER Fernandez
AFTER DEVELOPMENT		TIME END	LOGGER GMB/DTC

SAMPLE NO.	BLOWS ON SAMPLER	DRIVE	RECOVERY		VISUAL FIELD CLASSIFICATION (S.S. Dia / Weight / Drop)	GRAPHIC LOG	WELL CONSTRUCT	REMARKS
				65	Grey clayey silt sand			
	13 45 85	18"	12"					
				70	Grey clayey silty sand			
	29 30 36	18	18					
				75	Grey, very fine well sorted sand			
	11 25 33	18	18					
				80	Grey fine to medium fine, well sorted sand			
	12 12 12	18	18					

ENVIRODYNE ENGINEERS

FIELD BORING LOG

FOR Van Tran Electric/IEPA JOB NO.

LOCATION Vandalia, Illinois ELEV. BORING NO.

GROUND WATER			
WHILE DRILLING		DATE 4-27-87	DRILL CO.
BEFORE DEVELOPMENT		TIME START	DRILLER
AFTER DEVELOPMENT		TIME END 2:00 pm	LOGGER DTC

SAMPLE NO.	BLOWS ON SAMPLER	DRIVE	RECOVERY		VISUAL FIELD CLASSIFICATION (S.S. Dia / Weight / Drop)	GRAPHIC LOG	WELL CONSTRUCT	REMARKS
				85	Light grey fine sand in clay matrix		grouted to surface	
	14 17 17	18	18					
				90	Grey silt w/fragments of limestone			
	100/6"	6	6					
								augered for verification - hard to auger, rig rocking on augers.
				95	E.O.B. = 95.25'			
	100/3"	3	0		4-27-87 10:16 am - Rods pulled 11:10 am - pulling augers, grouting boring - pulled 10' grouted - repeat to surface			

ENVIRODYNE ENGINEERS

WELL CONSTRUCTION DETAILS

Job No. 3059-30000 Boring No. MW-D

Date of Installation 4-26-87 Time Started 2:30 pm Time Completed 5:15

Ground Surface Elev. _____

All depth measurements of well detail are from ground surface unless otherwise indicated.

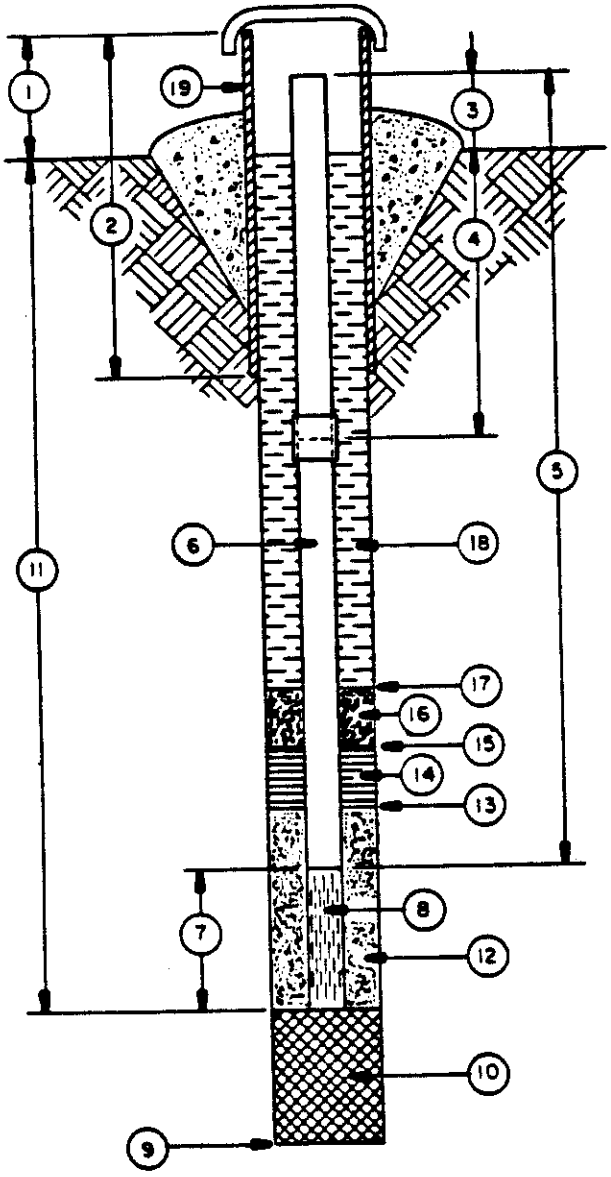

1. Height of Protective Casing Above Ground 2.8
2. Total Length of Protective Casing 5.0'
3. Height of Standpipe Above Ground 2.7'
4. Depth to First Coupling 0.7
   Coupling Interval 10'
5. Total Length of Blank Pipe 12'
6. Type of Blank Pipe No. 316 S.S. 2" ID
7. Length of Screen 5.0'
8. Type of Screen No. 316 S.S. 0.01" Slot
9. Total Depth of Boring 15.0 Hole Diam. 8"
10. Type of Material Natural sand cave-in
11. Depth to Bottom of Screen 14.5'
12. Type of Screen Filter Cave-in natrual sand to 9.5'
    Quantity Used Supplemented w/fine silica sand
13. Depth to Top of Filter 7.3'
14. Type of Seal Bentonite pellets
    Quantity Used ½ bucket
15. Depth to Top of Seal 6.0'
16. Type of Seal Weight Not applicable
    Quantity Used Not applicable
17. Depth to Top of Seal Weight Not applicable
18. Type of Grout ¼ cement; ¼ bentonite
    Grout Mixture _____
19. Type of Protective Casing 4" round, steel, hinged
    Concrete Collar Mixture grout

Remarks:

Boring from deep MWD hole up represents stratigraphy of this well
*had to move 15' west of deep boring to place well due to antifreze
introduction into boring. Well boring taken to 15' w/out sampling -
well installed thru 3 3/4" IDHSA.