BILL OF MATERIAL			
ITEM	QTY	DESCRIPTION	DRAWING#
1	1	BODY	3Y0-5-0XX
2	1	PLUG	421-5-0XX
3	1	SLEEVE	620-5-0XX
4	1	COVER	L501-5-0XX
5	1	COMBINED DIAPHRAGM/DELTARING	665-0-0XX
6	1	METAL DIAPHRAGM	680-0-3XX
7	1	EZ CAM	L641-0-0XX
8	1	EZ LOCK	900-5-0XX
9	1	EZ BRACKET	77Y-4-0XX
10	VAR.	COVER BOLT	PURCHASE
11	1	ADJUSTMENT SCREW	L871-0-0XX
12	4	BRACKET BOLT	PURCHASE
13	1	FLUOROSEAL WRENCH ●	L700-0-0XX
14	1	WRENCH BOLT ●	PURCHASE
15	1	GEAR ACTUATOR ✱	PURCHASE
16	4	GEAR BOLT ✱	PURCHASE

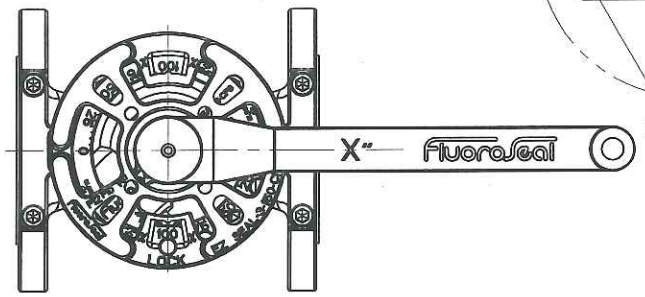

PLAN VIEW

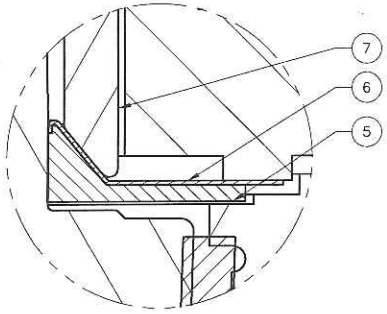

DETAIL A
N.T.S.

LEGEND:
✱ FOR USE WITH ACTUATOR ONLY.
● FOR USE WITH WRENCH ONLY

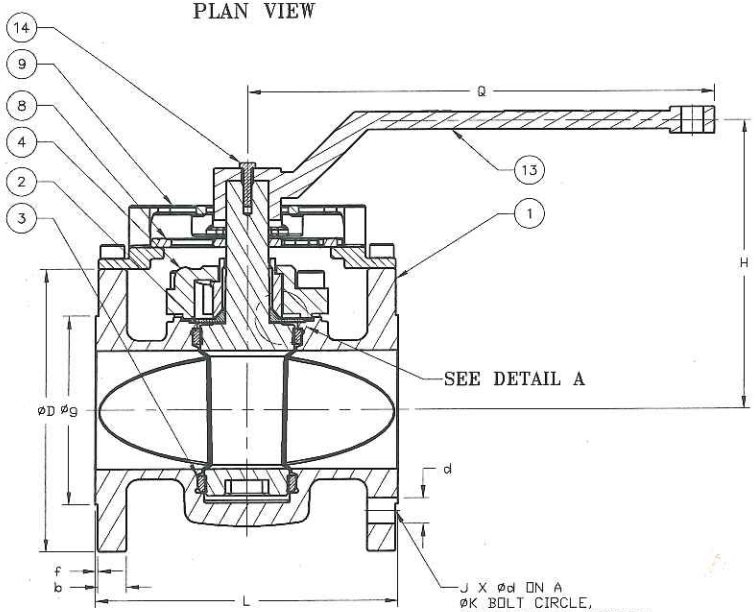

SECTION A-A

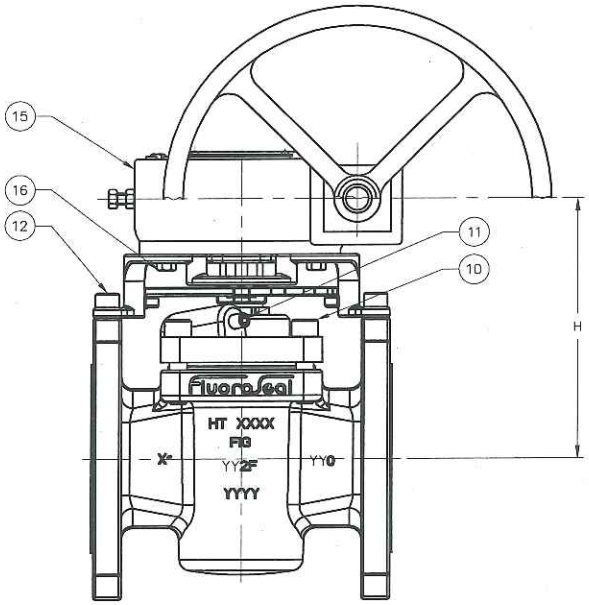

REV	DESCRIPTION	DATE	DFTR	APVD
0	SEE #NPD-0610	2008/08/14	K.D.	S.E.

REVISION

This drawing and the information herein contained is the property of FluoroSeal Specialty Valves and/or its subsidaries and is supplied upon the express conditions that the same be returned to FluoroSeal Specialty Valves upon request; all information herein contained is to be treated as secret and confidential; no reproduction of this drawing or any part thereof shall be made without the written permission of FluoroSeal Specialty Valves; acceptance of this drawing shall be deemed acceptance of the foregoing conditions.

FluoroSeal SPECIALTY VALVES
1875, 46e Avenue Lachine
Montreal QC, H8T 2N8
TEL: (514)739-0220
FAX: (514)739-5452

TITLE:
FLUOROSEAL EZ PLUG VALVE
1/2" TO 6" 152F/302F/602F ASSEMBLY
STD. CONFIG.

SIZE	DWG NO.	REV
A	FPS-152-302-602-F-EZ-05-15	0

DRAWN BY: K.DEBCHI	DATE: 2008/08/14	SCALE: N.T.S
CHKD BY: S.ELFASHNY	DATE: 2008/08/14	SHEET: 1/2

THIRD ANGLE PROJECTION DO NOT SCALE DRAWING

Yarmouth Research and Technology

Yarmouth Research Addendum to VDI 2440 (2000)

Scope: This addendum provides additional information and recommendations for valve tests performed according to VDI 2440. This does not supersede the VDI specification. Recommendations for sliding stem on-off valves (gates/globes), quarter-turn valves (ball, butterfly, plug, etc) and control valves are covered by this addendum.

Test Parameters:

Test Fluid	99% minimum purity helium		
Test Pressure	Full rated pressure at test temperature		
Temperature:	Ambient, 200C or 400C (or as stated by mfgr)		
Number of Mechanical Cycles	**Valve Type**	**Minimum**	**Extended**
	Gate/Globes	100	500
	Quarter Turns	1000	5000
	Control	1000	25000
Allowable Leakage:	1 x 10-4 mbar-l/sec per meter of mean seal circumference for temperatures at or below 250C 1 x 10-2 mbar-l/sec per meter of mean seal circumference for temperatures greater than 250C		

Test Procedure:

1. Assemble valves with suitable flanges, fittings and gaskets for the test conditions.
2. Calculate maximum allowable leakage of seals and gaskets by multiplying the above maximum allowable leakage rate by the mean seal diameter(meters)
3. For tests at a temperature greater than ambient, heat insulated valve to required temperature. Tolerance on temperature shall be +/- 5 degree C. Ambient temperature shall be 15-27 degree C. Thermocouple shall be inserted into the valve body near the stem seals.
4. After temperature has stabilized, pressurize valve with helium to the rated pressure. Tolerance on pressure shall be +/- 5%
5. Check fittings, gaskets, etc for leakage and adjust as required.
6. Adjust packing gland nuts to manufacturer's recommended torque.
7. Hold pressure for a minimum of 24 hours prior to leakage readings.
8. Cycle valve to "Minimum" cycle number stated above.
9. Create a small chamber around the stem seal area using AL foil and foil tape. The enclosure shall have a small diameter tube inside the chamber at the uppermost position, so that the rising helium leakage is collected.
10. Calibrate mass spectrometer with known leak rate. Zero meter to atmospheric conditions.
11. Attach the mass spectrometer leakage probe to the stem seal chamber tube.
12. After a 5 minute duration or until the leakage as stabilized, record the leakage over a 1 minute duration. Record the highest leakage.
13. Cycle the valve 1 time and record leakage reading during and after the cycling is completed to record maximum leakage.
14. If leakage is below the allowable, the additional cycles may be performed on the valve to the "Extended" cycle number and steps 11-13 shall be repeated.

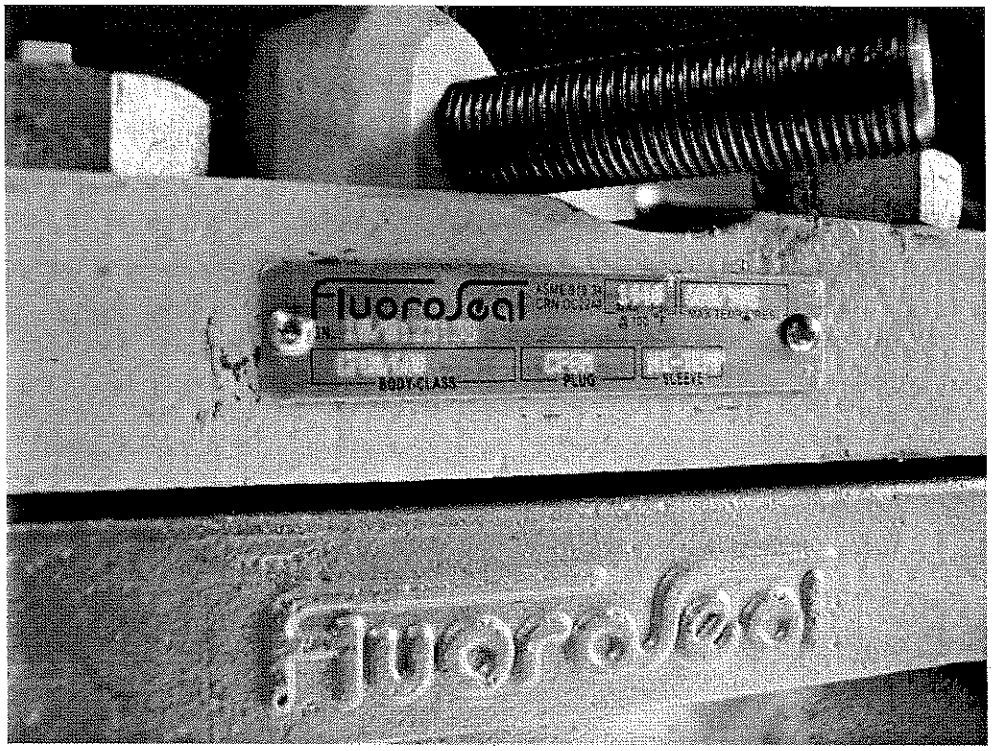
FluoroSeal
BODY/CLASS
PLUG
SLEEVE
FluoroSeal

FluoroSeal
HT
6"
802F

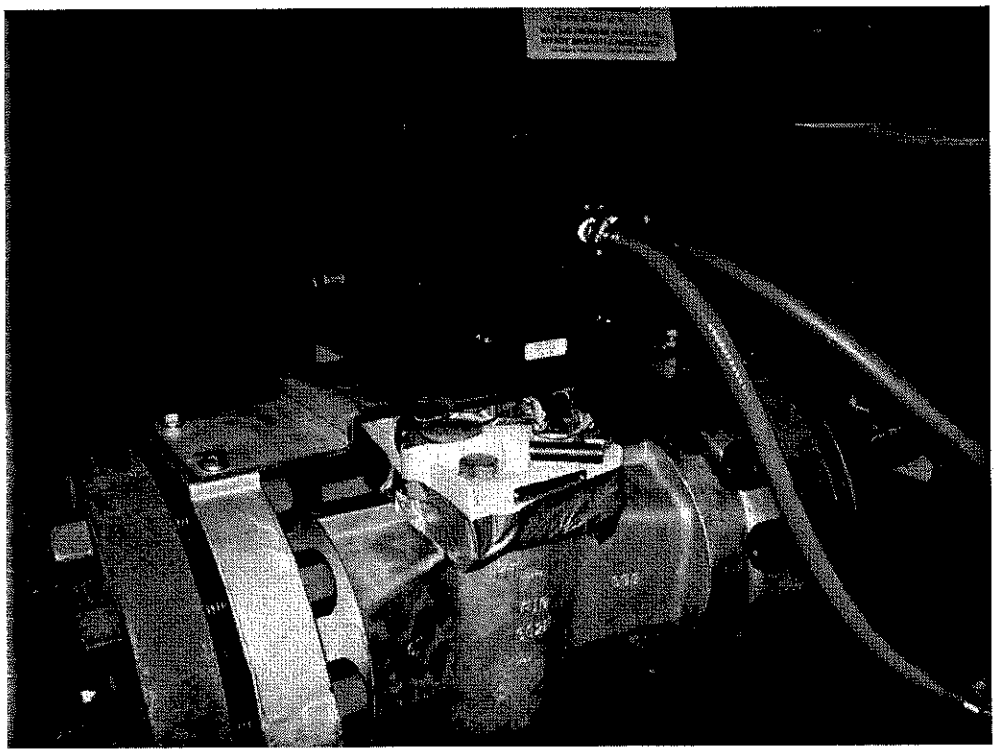

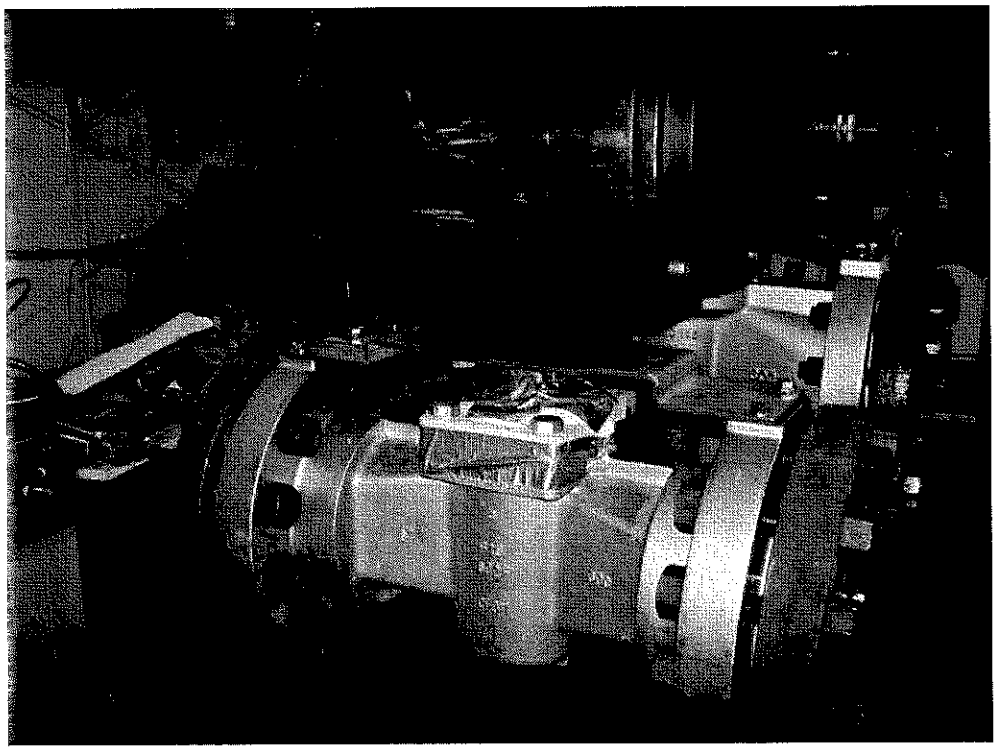

Yarmouth Research and Technology

Valve Description: 6 inch Class 600 Fluoroseal Plug Valve **Date:** 2/1/2010

Cycle Number: 0

Time	Pressure (bar)	Bonnet (deg. C)	Body Temp (deg. C)	Body Temp (deg. C)	Leakage (mbar -l/sec)
8:50:40 AM	99	21	20	21	4.3E-07
8:50:41 AM	99	21	21	22	4.3E-07
8:50:42 AM	99	21	21	21	4.3E-07
8:50:43 AM	99	21	20	22	4.3E-07
8:50:44 AM	99	21	21	21	4.3E-07
8:50:45 AM	99	21	21	21	4.3E-07
8:50:46 AM	99	21	20	21	4.3E-07
8:50:47 AM	99	21	21	21	4.3E-07
8:50:48 AM	99	21	21	22	4.3E-07
8:50:49 AM	99	20	20	21	4.3E-07
8:50:50 AM	99	21	21	21	4.4E-07
8:50:51 AM	99	21	21	21	4.4E-07
8:50:52 AM	99	20	20	21	4.4E-07
8:50:53 AM	99	21	20	21	4.4E-07
8:50:54 AM	99	21	21	22	4.4E-07
8:50:55 AM	99	21	20	21	4.4E-07
8:50:56 AM	99	21	20	21	4.4E-07
8:50:57 AM	99	21	21	21	4.4E-07
8:50:58 AM	99	21	21	22	4.4E-07
8:50:59 AM	99	21	21	21	4.4E-07
8:51:00 AM	99	21	21	22	4.4E-07
8:51:01 AM	99	21	21	21	4.4E-07
8:51:02 AM	99	21	20	21	4.4E-07
8:51:03 AM	99	21	21	21	4.4E-07
8:51:04 AM	99	21	21	21	4.4E-07
8:51:05 AM	99	21	21	21	4.4E-07
8:51:06 AM	99	21	20	22	4.4E-07
8:51:07 AM	99	21	21	22	4.4E-07
8:51:08 AM	99	21	21	22	4.5E-07
8:51:09 AM	99	21	21	21	4.5E-07
8:51:10 AM	99	21	20	22	4.5E-07
8:51:11 AM	99	21	21	21	4.4E-07
8:51:12 AM	99	21	21	22	4.5E-07
8:51:13 AM	99	21	20	21	4.5E-07
8:51:14 AM	99	21	21	21	4.5E-07
8:51:15 AM	99	21	21	22	4.5E-07
8:51:16 AM	99	21	20	21	4.5E-07
8:51:17 AM	99	21	21	22	4.5E-07
8:51:18 AM	99	21	21	22	4.5E-07
8:51:19 AM	99	21	20	21	4.5E-07
8:51:20 AM	99	21	21	21	4.5E-07
8:51:21 AM	99	21	21	21	4.6E-07
8:51:22 AM	99	21	21	21	4.6E-07
8:51:23 AM	99	21	21	22	4.5E-07
8:51:24 AM	99	21	21	22	4.5E-07
8:51:25 AM	99	21	20	22	4.5E-07
8:51:26 AM	99	21	21	21	4.5E-07
8:51:27 AM	99	21	21	22	4.5E-07
8:51:28 AM	99	21	21	22	4.5E-07
8:51:29 AM	99	21	21	21	4.5E-07
8:51:30 AM	99	21	21	22	4.5E-07
8:51:31 AM	99	21	21	22	4.5E-07
8:51:32 AM	99	21	21	21	4.6E-07
8:51:33 AM	99	21	20	21	4.5E-07
8:51:34 AM	99	21	21	21	4.6E-07
8:51:35 AM	99	21	21	21	4.6E-07
8:51:36 AM	99	21	21	21	4.6E-07
8:51:37 AM	99	21	21	22	4.6E-07
8:51:38 AM	99	21	21	22	4.6E-07
8:51:39 AM	99	21	21	21	4.6E-07
Averages ->	**99**	**21**	**21**	**21**	**4.5E-07**
			Maximum ->		**4.6E-07**

Yarmouth Research and Technology

Valve Description: 6 inch Class 600 Fluoroseal Plug Valve **Date:** 2/1/2010

Cycle Number: 0

Time	Pressure (bar)	Bonnet (deg. C)	Body Temp (deg. C)	Body Temp (deg. C)	Leakage (mbar -l/sec)
8:52:37 AM	99	21	20	21	6.2E-07
8:52:38 AM	99	21	21	21	6.1E-07
8:52:39 AM	99	21	21	22	6.1E-07
8:52:40 AM	99	21	20	21	6.2E-07
8:52:41 AM	99	20	21	21	6.2E-07
8:52:42 AM	99	21	21	22	6.1E-07
8:52:43 AM	99	21	21	21	6.1E-07
8:52:44 AM	99	21	20	21	6.1E-07
8:52:45 AM	99	21	21	22	6.2E-07
8:52:46 AM	99	21	21	22	6.1E-07
8:52:47 AM	99	21	21	21	6.1E-07
8:52:48 AM	99	21	21	21	6.1E-07
8:52:49 AM	99	21	20	22	6.1E-07
8:52:50 AM	99	21	20	21	6.2E-07
8:52:51 AM	99	21	21	21	6.2E-07
8:52:52 AM	99	21	21	22	6.2E-07
8:52:53 AM	99	21	20	21	6.2E-07
8:52:54 AM	99	21	20	21	6.3E-07
8:52:55 AM	99	21	21	22	6.3E-07
8:52:56 AM	99	21	21	21	6.3E-07
8:52:57 AM	99	21	20	21	6.3E-07
8:52:58 AM	99	21	21	22	6.3E-07
8:52:59 AM	99	21	21	22	6.4E-07
8:53:00 AM	99	21	20	21	6.4E-07
8:53:01 AM	99	21	21	22	6.3E-07
8:53:02 AM	99	21	20	21	6.3E-07
8:53:03 AM	99	21	20	22	6.3E-07
8:53:04 AM	99	21	20	21	6.3E-07
8:53:05 AM	99	21	21	22	6.3E-07
8:53:06 AM	99	21	20	22	6.3E-07
8:53:07 AM	99	21	21	21	6.3E-07
8:53:08 AM	99	21	21	22	6.3E-07
8:53:09 AM	99	21	21	21	6.2E-07
8:53:10 AM	99	21	21	21	6.3E-07
8:53:11 AM	99	21	20	22	6.3E-07
8:53:12 AM	99	21	20	21	6.3E-07
8:53:13 AM	99	21	21	21	6.3E-07
8:53:14 AM	99	21	21	22	6.3E-07
8:53:15 AM	99	21	21	21	6.3E-07
8:53:16 AM	99	21	20	22	6.3E-07
8:53:17 AM	99	21	21	21	6.3E-07
8:53:18 AM	99	21	21	22	6.4E-07
8:53:19 AM	99	21	20	21	6.4E-07
8:53:20 AM	99	21	21	22	6.4E-07
8:53:21 AM	99	21	21	21	6.4E-07
8:53:22 AM	99	21	20	21	6.4E-07
8:53:23 AM	99	21	21	22	6.4E-07
8:53:24 AM	99	21	21	22	6.4E-07
8:53:25 AM	99	21	21	21	6.5E-07
8:53:26 AM	99	21	21	21	6.5E-07
8:53:27 AM	99	21	21	22	6.4E-07
8:53:28 AM	99	21	21	21	6.4E-07
8:53:29 AM	99	21	21	22	6.5E-07
8:53:30 AM	99	21	21	22	6.4E-07
8:53:31 AM	99	21	21	21	6.5E-07
8:53:32 AM	99	21	21	21	6.4E-07
8:53:33 AM	99	21	21	22	6.4E-07
8:53:34 AM	99	21	21	21	6.4E-07
8:53:35 AM	99	21	20	22	6.4E-07
8:53:36 AM	99	21	21	21	6.4E-07
Averages ->	**99**	**21**	**21**	**21**	**6.3E-07**
			Maximum ->		**6.5E-07**

Yarmouth Research and Technology

Valve Description: 6 inch Class 600 Fluoroseal Plug Valve **Date:** 2/2/2010

Cycle Number: 1000

Time	Pressure (bar)	Bonnet (deg. C)	Body Temp (deg. C)	Body Temp (deg. C)	Leakage (mbar -l/sec)
2:53:32 PM	99	22	22	22	5.8E-07
2:53:33 PM	99	22	22	22	5.7E-07
2:53:34 PM	99	22	22	22	5.4E-07
2:53:35 PM	99	22	22	22	5.2E-07
2:53:36 PM	99	22	22	22	5.2E-07
2:53:37 PM	99	22	22	22	5.2E-07
2:53:38 PM	99	22	22	22	5.2E-07
2:53:39 PM	99	22	22	22	5.2E-07
2:53:40 PM	99	22	22	22	5.2E-07
2:53:41 PM	99	22	22	22	5.3E-07
2:53:42 PM	99	22	22	22	5.2E-07
2:53:43 PM	99	22	22	22	5.3E-07
2:53:44 PM	99	22	22	22	5.3E-07
2:53:45 PM	99	22	22	22	5.3E-07
2:53:46 PM	99	22	22	22	5.2E-07
2:53:47 PM	99	22	22	22	5.2E-07
2:53:48 PM	99	22	22	22	5.2E-07
2:53:49 PM	99	22	22	22	5.2E-07
2:53:50 PM	99	22	22	22	5.2E-07
2:53:51 PM	99	22	22	22	5.2E-07
2:53:52 PM	99	22	22	22	5.3E-07
2:53:53 PM	99	22	22	22	5.5E-07
2:53:54 PM	99	22	22	22	5.5E-07
2:53:55 PM	99	22	22	22	5.4E-07
2:53:56 PM	99	22	22	22	5.3E-07
2:53:57 PM	99	22	22	22	5.3E-07
2:53:58 PM	99	22	22	22	5.3E-07
2:53:59 PM	99	22	22	22	5.2E-07
2:54:00 PM	99	22	22	22	5.2E-07
2:54:01 PM	99	22	22	22	5.1E-07
2:54:02 PM	99	22	22	22	5.0E-07
2:54:03 PM	99	22	22	22	4.9E-07
2:54:04 PM	99	22	22	22	4.9E-07
2:54:05 PM	99	22	22	22	4.9E-07
2:54:06 PM	99	22	22	22	4.8E-07
2:54:07 PM	99	22	22	22	4.8E-07
2:54:08 PM	99	22	22	22	4.8E-07
2:54:09 PM	99	22	22	22	4.8E-07
2:54:10 PM	99	22	22	22	4.8E-07
2:54:11 PM	99	22	22	22	4.8E-07
2:54:12 PM	99	22	22	22	4.9E-07
2:54:13 PM	99	22	22	22	4.9E-07
2:54:14 PM	99	22	22	22	4.9E-07
2:54:15 PM	99	22	22	22	4.9E-07
2:54:16 PM	99	22	22	22	4.9E-07
2:54:17 PM	99	22	22	22	4.9E-07
2:54:18 PM	99	22	22	22	4.9E-07
2:54:19 PM	99	22	22	22	4.9E-07
2:54:20 PM	99	22	22	22	4.9E-07
2:54:21 PM	99	22	22	22	5.0E-07
2:54:22 PM	99	22	22	22	5.0E-07
2:54:23 PM	99	22	22	22	5.1E-07
2:54:24 PM	99	22	22	22	5.2E-07
2:54:25 PM	99	22	22	22	5.3E-07
2:54:26 PM	99	22	22	22	5.4E-07
2:54:27 PM	99	22	22	22	5.5E-07
2:54:28 PM	99	21	22	22	5.4E-07
2:54:29 PM	99	22	22	22	5.4E-07
2:54:30 PM	99	22	22	22	5.4E-07
2:54:31 PM	99	22	22	22	5.3E-07
Averages ->	**99**	**22**	**22**	**22**	**5.2E-07**
			Maximum ->		**5.8E-07**

Yarmouth Research and Technology

Valve Description: 6 inch Class 600 Fluoroseal Plug Valve **Date:** 2/2/2010

Cycle Number: 1000

Time	Pressure (bar)	Bonnet (deg. C)	Body Temp (deg. C)	Body Temp (deg. C)	Leakage (mbar -l/sec)
2:55:03 PM	99	22	22	22	4.9E-07
2:55:04 PM	99	22	22	22	4.9E-07
2:55:05 PM	99	22	22	22	5.0E-07
2:55:06 PM	99	22	22	22	5.0E-07
2:55:07 PM	99	22	22	22	5.0E-07
2:55:08 PM	99	22	22	22	5.0E-07
2:55:09 PM	99	22	22	22	5.0E-07
2:55:10 PM	99	22	22	22	5.0E-07
2:55:11 PM	99	22	22	22	5.0E-07
2:55:12 PM	99	22	22	22	5.1E-07
2:55:13 PM	99	22	22	22	4.9E-07
2:55:14 PM	99	22	22	22	4.8E-07
2:55:15 PM	99	22	22	22	4.9E-07
2:55:16 PM	99	22	22	22	4.9E-07
2:55:17 PM	99	22	22	22	4.9E-07
2:55:18 PM	99	22	22	22	4.8E-07
2:55:19 PM	99	22	22	22	4.7E-07
2:55:20 PM	99	22	22	22	4.7E-07
2:55:21 PM	99	22	22	22	4.7E-07
2:55:22 PM	99	22	22	22	4.8E-07
2:55:23 PM	99	22	22	22	4.7E-07
2:55:24 PM	99	22	22	22	4.7E-07
2:55:25 PM	99	22	22	22	4.7E-07
2:55:26 PM	99	22	22	22	4.7E-07
2:55:27 PM	99	22	22	22	4.7E-07
2:55:28 PM	99	22	22	22	4.7E-07
2:55:29 PM	99	22	22	22	4.6E-07
2:55:30 PM	99	22	22	22	4.6E-07
2:55:31 PM	99	22	22	23	4.6E-07
2:55:32 PM	99	22	22	22	4.6E-07
2:55:33 PM	99	22	22	22	4.6E-07
2:55:34 PM	99	22	22	22	4.6E-07
2:55:35 PM	99	22	22	22	4.7E-07
2:55:36 PM	99	22	22	22	4.8E-07
2:55:37 PM	99	22	22	22	4.8E-07
2:55:38 PM	99	22	22	22	4.8E-07
2:55:39 PM	99	22	22	22	4.7E-07
2:55:40 PM	99	22	22	22	4.7E-07
2:55:41 PM	99	22	22	22	4.7E-07
2:55:42 PM	99	22	22	22	4.6E-07
2:55:43 PM	99	22	22	22	4.4E-07
2:55:44 PM	99	22	22	22	4.4E-07
2:55:45 PM	99	22	22	22	4.3E-07
2:55:46 PM	99	22	22	22	4.3E-07
2:55:47 PM	99	22	22	22	4.3E-07
2:55:48 PM	99	22	21	22	4.2E-07
2:55:49 PM	99	22	22	22	4.2E-07
2:55:50 PM	99	22	22	22	4.2E-07
2:55:51 PM	99	22	22	22	4.2E-07
2:55:52 PM	99	22	22	22	4.2E-07
2:55:53 PM	99	22	22	22	4.1E-07
2:55:54 PM	99	22	22	22	4.1E-07
2:55:55 PM	99	22	22	22	4.1E-07
2:55:56 PM	99	22	22	22	4.0E-07
2:55:57 PM	99	22	22	22	4.0E-07
2:55:58 PM	99	22	22	22	4.0E-07
2:55:59 PM	99	22	22	22	4.0E-07
2:56:00 PM	99	22	22	22	4.0E-07
2:56:01 PM	99	22	22	22	4.0E-07
2:56:02 PM	99	22	22	22	4.0E-07
Averages ->	**99**	**22**	**22**	**22**	**4.6E-07**
			Maximum ->		**5.1E-07**

Yarmouth Research and Technology

Valve Description: 6 inch Class 600 Fluoroseal Plug Valve **Date:** 2/5/2010

Cycle Number: 5000

Time	Pressure (bar)	Bonnet (deg. C)	Body Temp (deg. C)	Body Temp (deg. C)	Leakage (mbar -l/sec)
10:51:02 AM	99	20	20	20	6.1E-07
10:51:03 AM	99	20	20	20	6.1E-07
10:51:04 AM	99	20	20	20	6.1E-07
10:51:05 AM	99	20	20	20	6.1E-07
10:51:06 AM	99	20	20	20	6.1E-07
10:51:07 AM	99	20	20	20	6.2E-07
10:51:08 AM	99	20	20	20	6.2E-07
10:51:09 AM	99	20	20	20	6.2E-07
10:51:10 AM	99	20	20	20	6.2E-07
10:51:11 AM	99	20	20	20	6.3E-07
10:51:12 AM	99	20	20	20	6.3E-07
10:51:13 AM	99	20	20	20	6.4E-07
10:51:14 AM	99	20	20	20	6.4E-07
10:51:15 AM	99	20	20	20	6.3E-07
10:51:16 AM	99	20	20	20	6.4E-07
10:51:17 AM	99	20	20	20	6.6E-07
10:51:18 AM	99	20	20	20	7.1E-07
10:51:19 AM	99	20	20	20	7.6E-07
10:51:20 AM	99	20	20	20	8.3E-07
10:51:21 AM	99	20	20	20	8.8E-07
10:51:22 AM	99	20	20	20	9.3E-07
10:51:23 AM	99	20	20	20	9.5E-07
10:51:24 AM	99	20	20	20	9.5E-07
10:51:25 AM	99	20	20	20	9.4E-07
10:51:26 AM	99	20	20	20	9.2E-07
10:51:27 AM	99	20	20	20	9.0E-07
10:51:28 AM	99	20	20	20	8.7E-07
10:51:29 AM	99	20	20	20	8.4E-07
10:51:30 AM	99	20	20	20	8.2E-07
10:51:31 AM	99	20	20	20	8.0E-07
10:51:32 AM	99	20	20	20	8.0E-07
10:51:33 AM	99	20	20	20	8.1E-07
10:51:34 AM	99	20	20	20	8.1E-07
10:51:35 AM	99	20	20	20	8.3E-07
10:51:36 AM	99	20	20	20	8.4E-07
10:51:37 AM	99	20	20	20	8.4E-07
10:51:38 AM	99	20	20	20	8.4E-07
10:51:39 AM	99	20	20	20	8.4E-07
10:51:40 AM	99	20	20	20	8.4E-07
10:51:41 AM	99	20	20	20	8.6E-07
10:51:42 AM	99	20	20	20	8.7E-07
10:51:43 AM	99	20	20	20	8.8E-07
10:51:44 AM	99	20	20	20	8.8E-07
10:51:45 AM	99	20	20	20	8.8E-07
10:51:46 AM	99	20	20	20	8.7E-07
10:51:47 AM	99	20	20	20	8.6E-07
10:51:48 AM	99	20	20	20	8.3E-07
10:51:49 AM	99	20	20	20	8.2E-07
10:51:50 AM	99	20	20	20	8.0E-07
10:51:51 AM	99	20	20	20	7.9E-07
10:51:52 AM	99	20	20	20	7.7E-07
10:51:53 AM	99	20	20	20	7.5E-07
10:51:54 AM	99	20	20	20	7.4E-07
10:51:55 AM	99	20	20	20	7.2E-07
10:51:56 AM	99	20	20	20	7.1E-07
10:51:57 AM	99	20	20	20	6.9E-07
10:51:58 AM	99	20	20	20	6.6E-07
10:51:59 AM	99	20	20	20	6.6E-07
10:52:00 AM	99	20	20	20	6.5E-07
10:52:01 AM	99	20	20	20	6.5E-07
Averages ->	**99**	**20**	**20**	**20**	**7.6E-07**
			Maximum ->		**9.5E-07**

Yarmouth Research and Technology

Valve Description: 6 inch Class 600 Fluoroseal Plug Valve **Date:** 2/5/2010

Cycle Number: 5000

Time	Pressure (bar)	Bonnet (deg. C)	Body Temp (deg. C)	Body Temp (deg. C)	Leakage (mbar -l/sec)
10:52:40 AM	99	20	20	20	6.0E-07
10:52:41 AM	99	20	20	20	6.1E-07
10:52:42 AM	99	20	20	20	6.2E-07
10:52:43 AM	99	20	20	20	6.2E-07
10:52:44 AM	99	20	20	20	6.3E-07
10:52:45 AM	99	20	20	20	6.3E-07
10:52:46 AM	99	20	20	20	6.2E-07
10:52:47 AM	99	20	20	20	6.2E-07
10:52:48 AM	99	20	20	20	6.2E-07
10:52:49 AM	99	20	20	20	6.1E-07
10:52:50 AM	99	20	20	20	6.0E-07
10:52:51 AM	99	20	20	20	5.9E-07
10:52:52 AM	99	20	20	20	5.8E-07
10:52:53 AM	99	20	20	20	5.7E-07
10:52:54 AM	99	20	20	20	5.6E-07
10:52:55 AM	99	20	20	20	5.5E-07
10:52:56 AM	99	20	20	20	5.4E-07
10:52:57 AM	99	20	20	20	5.4E-07
10:52:58 AM	99	20	20	20	5.6E-07
10:52:59 AM	99	20	20	20	5.7E-07
10:53:00 AM	99	20	20	20	6.1E-07
10:53:01 AM	99	20	20	20	6.4E-07
10:53:02 AM	99	20	20	20	6.7E-07
10:53:03 AM	99	20	20	20	7.2E-07
10:53:04 AM	99	20	20	20	7.5E-07
10:53:05 AM	99	20	20	20	7.9E-07
10:53:06 AM	99	20	20	20	8.3E-07
10:53:07 AM	99	20	20	20	8.4E-07
10:53:08 AM	99	20	20	20	8.6E-07
10:53:09 AM	99	20	20	20	8.6E-07
10:53:10 AM	99	20	20	20	8.6E-07
10:53:11 AM	99	20	20	20	8.5E-07
10:53:12 AM	99	20	20	20	8.5E-07
10:53:13 AM	99	20	20	20	8.5E-07
10:53:14 AM	99	20	20	20	8.4E-07
10:53:15 AM	99	20	20	20	8.3E-07
10:53:16 AM	99	20	20	20	8.2E-07
10:53:17 AM	99	20	20	20	8.1E-07
10:53:18 AM	99	20	20	20	7.9E-07
10:53:19 AM	99	20	20	20	7.7E-07
10:53:20 AM	99	20	20	20	7.6E-07
10:53:21 AM	99	20	20	20	7.6E-07
10:53:22 AM	99	20	20	20	7.6E-07
10:53:23 AM	99	20	20	20	7.6E-07
10:53:24 AM	99	20	20	20	7.8E-07
10:53:25 AM	99	20	20	20	7.9E-07
10:53:26 AM	99	20	20	20	7.7E-07
10:53:27 AM	99	20	20	20	7.9E-07
10:53:28 AM	99	20	20	20	8.0E-07
10:53:29 AM	99	20	20	20	7.9E-07
10:53:30 AM	99	20	20	20	7.7E-07
10:53:31 AM	99	20	20	20	7.6E-07
10:53:32 AM	99	20	20	20	7.3E-07
10:53:33 AM	99	20	20	20	7.0E-07
10:53:34 AM	99	20	20	20	6.8E-07
10:53:35 AM	99	20	20	20	6.6E-07
10:53:36 AM	99	20	20	20	6.5E-07
10:53:37 AM	99	20	20	20	6.3E-07
10:53:38 AM	99	20	20	20	6.0E-07
10:53:39 AM	99	20	20	20	6.0E-07
Averages ->	**99**	**20**	**20**	**20**	**7.0E-07**
			Maximum ->		**8.6E-07**

Yarmouth Research and Technology

Valve Description: 6 inch Class 600 Fluoroseal Plug Valve **Date:** 2/8/2010

Cycle Number: 10000

Time	Pressure (bar)	Bonnet (deg. C)	Body Temp (deg. C)	Body Temp (deg. C)	Leakage (mbar -l/sec)
9:37:57 AM	99	21	21	21	1.2E-06
9:37:58 AM	99	21	21	21	1.2E-06
9:37:59 AM	99	21	21	21	1.2E-06
9:38:00 AM	99	21	21	21	1.2E-06
9:38:01 AM	99	21	21	21	1.2E-06
9:38:02 AM	99	21	21	21	1.2E-06
9:38:03 AM	99	21	21	21	1.2E-06
9:38:04 AM	99	21	21	21	1.2E-06
9:38:05 AM	99	21	21	21	1.2E-06
9:38:06 AM	99	21	20	21	1.2E-06
9:38:07 AM	99	21	21	21	1.2E-06
9:38:08 AM	99	21	21	21	1.2E-06
9:38:09 AM	99	21	21	21	1.2E-06
9:38:10 AM	99	21	21	21	1.2E-06
9:38:11 AM	99	21	21	21	1.2E-06
9:38:12 AM	99	21	21	21	1.2E-06
9:38:13 AM	99	21	21	21	1.2E-06
9:38:14 AM	99	21	21	21	1.2E-06
9:38:15 AM	99	21	21	21	1.2E-06
9:38:16 AM	99	21	21	21	1.2E-06
9:38:17 AM	99	21	21	21	1.2E-06
9:38:18 AM	99	21	21	21	1.2E-06
9:38:19 AM	99	21	21	21	1.2E-06
9:38:20 AM	99	21	21	21	1.2E-06
9:38:21 AM	99	21	21	21	1.2E-06
9:38:22 AM	99	21	21	21	1.2E-06
9:38:23 AM	99	21	21	21	1.2E-06
9:38:24 AM	99	21	21	21	1.2E-06
9:38:25 AM	99	21	21	21	1.2E-06
9:38:26 AM	99	21	21	21	1.2E-06
9:38:27 AM	99	21	21	21	1.2E-06
9:38:28 AM	99	21	21	21	1.2E-06
9:38:29 AM	99	21	21	21	1.2E-06
9:38:30 AM	99	21	21	21	1.2E-06
9:38:31 AM	99	21	21	21	1.2E-06
9:38:32 AM	99	21	21	21	1.2E-06
9:38:33 AM	99	21	21	21	1.2E-06
9:38:34 AM	99	21	21	21	1.2E-06
9:38:35 AM	99	21	21	21	1.2E-06
9:38:36 AM	99	21	21	21	1.2E-06
9:38:37 AM	99	21	21	21	1.2E-06
9:38:38 AM	99	21	21	21	1.2E-06
9:38:39 AM	99	21	21	21	1.2E-06
9:38:40 AM	99	21	21	21	1.2E-06
9:38:41 AM	99	21	21	21	1.2E-06
9:38:42 AM	99	21	21	21	1.2E-06
9:38:43 AM	99	21	21	21	1.2E-06
9:38:44 AM	99	21	21	21	1.2E-06
9:38:45 AM	99	21	21	21	1.2E-06
9:38:46 AM	99	21	21	21	1.2E-06
9:38:47 AM	99	21	21	21	1.2E-06
9:38:48 AM	99	21	21	21	1.2E-06
9:38:49 AM	99	21	21	21	1.2E-06
9:38:50 AM	99	21	21	21	1.2E-06
9:38:51 AM	99	21	21	21	1.2E-06
9:38:52 AM	99	21	21	21	1.2E-06
9:38:53 AM	99	21	21	21	1.2E-06
9:38:54 AM	99	21	21	21	1.2E-06
9:38:55 AM	99	21	21	21	1.2E-06
9:38:56 AM	99	21	21	21	1.2E-06
Averages ->	**99**	**21**	**21**	**21**	**1.2E-06**
			Maximum ->		**1.2E-06**

Yarmouth Research and Technology

Valve Description: 6 inch Class 600 Fluoroseal Plug Valve **Date:** 2/8/2010

Cycle Number: 10000

Time	Pressure (bar)	Bonnet (deg. C)	Body Temp (deg. C)	Body Temp (deg. C)	Leakage (mbar -l/sec)
9:39:57 AM	99	21	21	21	1.3E-06
9:39:58 AM	99	21	21	21	1.3E-06
9:39:59 AM	99	21	21	21	1.3E-06
9:40:00 AM	99	21	21	21	1.3E-06
9:40:01 AM	99	21	21	21	1.3E-06
9:40:02 AM	99	21	21	21	1.3E-06
9:40:03 AM	99	21	21	21	1.3E-06
9:40:04 AM	99	21	21	21	1.3E-06
9:40:05 AM	99	21	21	21	1.3E-06
9:40:06 AM	99	21	21	21	1.3E-06
9:40:07 AM	99	21	21	21	1.3E-06
9:40:08 AM	99	21	21	21	1.3E-06
9:40:09 AM	99	21	21	21	1.3E-06
9:40:10 AM	99	21	21	21	1.3E-06
9:40:11 AM	99	21	21	21	1.3E-06
9:40:12 AM	99	21	21	21	1.3E-06
9:40:13 AM	99	21	21	21	1.3E-06
9:40:14 AM	99	21	21	21	1.3E-06
9:40:15 AM	99	21	21	21	1.3E-06
9:40:16 AM	99	21	21	21	1.4E-06
9:40:17 AM	99	21	21	21	1.3E-06
9:40:18 AM	99	21	21	21	1.3E-06
9:40:19 AM	99	21	21	21	1.3E-06
9:40:20 AM	99	21	21	21	1.3E-06
9:40:21 AM	99	21	21	21	1.3E-06
9:40:22 AM	99	21	21	21	1.3E-06
9:40:23 AM	99	21	21	21	1.3E-06
9:40:24 AM	99	21	21	21	1.3E-06
9:40:25 AM	99	21	21	21	1.3E-06
9:40:26 AM	99	21	21	21	1.3E-06
9:40:27 AM	99	21	21	21	1.4E-06
9:40:28 AM	99	21	21	21	1.2E-06
9:40:29 AM	99	21	21	21	1.3E-06
9:40:30 AM	99	21	21	21	1.3E-06
9:40:31 AM	99	21	21	21	1.3E-06
9:40:32 AM	99	21	21	21	1.3E-06
9:40:33 AM	99	21	21	21	1.3E-06
9:40:34 AM	99	21	21	21	1.3E-06
9:40:35 AM	99	21	21	21	1.3E-06
9:40:36 AM	99	21	21	21	1.3E-06
9:40:37 AM	99	21	21	21	1.3E-06
9:40:38 AM	99	21	20	21	1.2E-06
9:40:39 AM	99	21	21	21	1.2E-06
9:40:40 AM	99	21	21	21	1.2E-06
9:40:41 AM	99	21	21	21	1.2E-06
9:40:42 AM	99	21	21	21	1.2E-06
9:40:43 AM	99	21	21	21	1.2E-06
9:40:44 AM	99	21	21	21	1.2E-06
9:40:45 AM	99	21	20	21	1.3E-06
9:40:46 AM	99	21	21	21	1.2E-06
9:40:47 AM	99	21	21	21	1.2E-06
9:40:48 AM	99	21	21	21	1.2E-06
9:40:49 AM	99	21	21	21	1.3E-06
9:40:50 AM	99	21	21	21	1.2E-06
9:40:51 AM	99	21	21	21	1.2E-06
9:40:52 AM	99	21	21	21	1.2E-06
9:40:53 AM	99	21	21	21	1.2E-06
9:40:54 AM	99	21	21	21	1.2E-06
9:40:55 AM	99	21	21	21	1.2E-06
9:40:56 AM	99	20	21	21	1.2E-06
Averages ->	**99**	**21**	**21**	**21**	**1.3E-06**
			Maximum ->		**1.4E-06**

Yarmouth Research and Technology

Valve Description: 6 inch Class 600 Fluoroseal Plug Valve **Date:** 2/11/2010

Cycle Number: 15000

Time	Pressure (bar)	Bonnet (deg. C)	Body Temp (deg. C)	Body Temp (deg. C)	Leakage (mbar -l/sec)
9:18:19 AM	99	21	21	21	3.0E-06
9:18:20 AM	99	21	21	21	3.0E-06
9:18:21 AM	99	21	21	21	3.0E-06
9:18:22 AM	99	21	21	21	3.0E-06
9:18:23 AM	99	21	21	21	3.0E-06
9:18:24 AM	99	21	21	21	3.0E-06
9:18:25 AM	99	21	21	21	3.0E-06
9:18:26 AM	99	21	21	21	3.0E-06
9:18:27 AM	99	21	21	21	3.0E-06
9:18:28 AM	99	21	21	21	3.1E-06
9:18:29 AM	99	21	21	21	3.0E-06
9:18:30 AM	99	21	21	21	3.0E-06
9:18:31 AM	99	21	21	21	3.0E-06
9:18:32 AM	99	21	21	21	3.0E-06
9:18:33 AM	99	21	21	21	3.1E-06
9:18:34 AM	99	21	21	21	3.0E-06
9:18:35 AM	99	21	21	21	3.1E-06
9:18:36 AM	99	21	21	21	3.1E-06
9:18:37 AM	99	21	21	21	3.1E-06
9:18:38 AM	99	21	21	21	3.1E-06
9:18:39 AM	99	21	21	21	3.1E-06
9:18:40 AM	99	21	21	21	3.1E-06
9:18:41 AM	99	21	21	21	3.1E-06
9:18:42 AM	99	21	21	21	3.1E-06
9:18:43 AM	99	21	21	21	3.1E-06
9:18:44 AM	99	21	21	21	3.1E-06
9:18:45 AM	99	21	21	21	3.1E-06
9:18:46 AM	99	21	21	21	3.0E-06
9:18:47 AM	99	21	21	21	3.0E-06
9:18:48 AM	99	21	21	21	3.0E-06
9:18:49 AM	99	21	21	21	3.0E-06
9:18:50 AM	99	21	21	21	3.0E-06
9:18:51 AM	99	21	21	21	3.0E-06
9:18:52 AM	99	21	21	21	3.0E-06
9:18:53 AM	99	21	21	21	3.0E-06
9:18:54 AM	99	21	21	21	3.0E-06
9:18:55 AM	99	21	21	21	3.0E-06
9:18:56 AM	99	21	21	21	3.0E-06
9:18:57 AM	99	21	21	21	3.0E-06
9:18:58 AM	99	21	21	21	3.0E-06
9:18:59 AM	99	21	21	21	3.0E-06
9:19:00 AM	99	21	21	21	3.0E-06
9:19:01 AM	99	21	21	21	3.0E-06
9:19:02 AM	99	21	21	21	3.0E-06
9:19:03 AM	99	21	21	21	3.0E-06
9:19:04 AM	99	21	21	21	3.0E-06
9:19:05 AM	99	21	21	21	3.0E-06
9:19:06 AM	99	21	21	21	3.0E-06
9:19:07 AM	99	21	21	21	3.0E-06
9:19:08 AM	99	21	21	21	3.0E-06
9:19:09 AM	99	21	21	21	3.0E-06
9:19:10 AM	99	21	21	21	3.0E-06
9:19:11 AM	99	21	21	21	2.9E-06
9:19:12 AM	99	21	21	21	2.9E-06
9:19:13 AM	99	21	21	21	2.9E-06
9:19:14 AM	99	21	21	21	2.9E-06
9:19:15 AM	99	21	21	21	3.0E-06
9:19:16 AM	99	21	21	21	2.9E-06
9:19:17 AM	99	21	21	21	2.9E-06
9:19:18 AM	99	21	21	21	2.9E-06
Averages ->	**99**	**21**	**21**	**21**	**3.0E-06**
			Maximum ->		**3.1E-06**

Yarmouth Research and Technology

Valve Description: 6 inch Class 600 Fluoroseal Plug Valve **Date:** 2/11/2010

Cycle Number: 15000

Time	Pressure (bar)	Bonnet (deg. C)	Body Temp (deg. C)	Body Temp (deg. C)	Leakage (mbar -l/sec)
9:20:05 AM	99	21	21	21	2.9E-06
9:20:06 AM	99	21	21	21	2.9E-06
9:20:07 AM	99	21	21	21	2.9E-06
9:20:08 AM	99	21	21	21	2.9E-06
9:20:09 AM	99	21	21	21	2.9E-06
9:20:10 AM	99	21	21	21	2.9E-06
9:20:11 AM	99	21	21	21	2.9E-06
9:20:12 AM	99	21	21	21	2.9E-06
9:20:13 AM	99	21	21	21	2.9E-06
9:20:14 AM	99	21	21	21	2.9E-06
9:20:15 AM	99	21	21	21	2.9E-06
9:20:16 AM	99	21	21	21	2.9E-06
9:20:17 AM	99	21	21	21	3.0E-06
9:20:18 AM	99	21	21	21	2.9E-06
9:20:19 AM	99	21	21	21	3.0E-06
9:20:20 AM	99	21	21	21	3.0E-06
9:20:21 AM	99	21	21	21	3.0E-06
9:20:22 AM	99	21	21	21	3.0E-06
9:20:23 AM	99	21	21	21	3.0E-06
9:20:24 AM	99	21	21	21	3.0E-06
9:20:25 AM	99	21	21	21	3.0E-06
9:20:26 AM	99	21	21	21	3.0E-06
9:20:27 AM	99	21	21	21	3.0E-06
9:20:28 AM	99	21	21	21	3.0E-06
9:20:29 AM	99	21	21	21	3.0E-06
9:20:30 AM	99	21	21	21	3.0E-06
9:20:31 AM	99	21	21	21	3.0E-06
9:20:32 AM	99	21	21	21	3.0E-06
9:20:33 AM	99	21	21	21	3.0E-06
9:20:34 AM	99	21	21	21	3.0E-06
9:20:35 AM	99	21	21	21	3.0E-06
9:20:36 AM	99	21	21	21	3.0E-06
9:20:37 AM	99	21	21	21	3.0E-06
9:20:38 AM	99	21	21	21	3.0E-06
9:20:39 AM	99	21	21	21	3.0E-06
9:20:40 AM	99	21	21	21	3.0E-06
9:20:41 AM	99	21	21	21	3.1E-06
9:20:42 AM	99	21	21	21	3.1E-06
9:20:43 AM	99	21	21	21	3.0E-06
9:20:44 AM	99	21	21	21	3.1E-06
9:20:45 AM	99	21	21	21	3.1E-06
9:20:46 AM	99	21	21	21	3.1E-06
9:20:47 AM	99	21	21	21	3.1E-06
9:20:48 AM	99	21	21	21	3.1E-06
9:20:49 AM	99	21	21	21	3.1E-06
9:20:50 AM	99	21	21	21	3.1E-06
9:20:51 AM	99	21	21	21	3.1E-06
9:20:52 AM	99	21	21	21	3.1E-06
9:20:53 AM	99	21	21	21	3.1E-06
9:20:54 AM	99	21	21	21	3.1E-06
9:20:55 AM	99	21	21	21	3.1E-06
9:20:56 AM	99	21	21	21	3.1E-06
9:20:57 AM	99	21	21	21	3.0E-06
9:20:58 AM	99	21	21	21	3.0E-06
9:20:59 AM	99	21	21	21	3.0E-06
9:21:00 AM	99	21	21	21	3.0E-06
9:21:01 AM	99	21	21	21	3.0E-06
9:21:02 AM	99	21	21	21	3.0E-06
9:21:03 AM	99	21	21	21	3.0E-06
9:21:04 AM	99	21	21	21	3.0E-06
Averages ->	**99**	**21**	**21**	**21**	**3.0E-06**
			Maximum ->		**3.1E-06**

Yarmouth Research and Technology

Valve Description: 6 inch Class 600 Fluoroseal Plug Valve **Date:** 2/14/2010

Cycle Number: 20000

Time	Pressure (bar)	Bonnet (deg. C)	Body Temp (deg. C)	Body Temp (deg. C)	Leakage (mbar -l/sec)
8:32:35 AM	99	21	21	21	2.8E-06
8:32:36 AM	99	21	21	21	2.8E-06
8:32:37 AM	99	21	21	21	2.8E-06
8:32:38 AM	99	21	21	21	2.8E-06
8:32:39 AM	99	21	21	21	2.9E-06
8:32:40 AM	99	21	20	21	2.8E-06
8:32:41 AM	99	21	21	21	2.9E-06
8:32:42 AM	99	21	21	21	2.9E-06
8:32:43 AM	99	21	21	21	2.9E-06
8:32:44 AM	99	21	21	21	2.8E-06
8:32:45 AM	99	21	21	21	2.8E-06
8:32:46 AM	99	21	21	21	2.8E-06
8:32:47 AM	99	21	21	21	2.8E-06
8:32:48 AM	99	21	21	21	2.8E-06
8:32:49 AM	99	21	21	21	2.8E-06
8:32:50 AM	99	21	21	21	2.8E-06
8:32:51 AM	99	21	21	21	2.8E-06
8:32:52 AM	99	21	21	21	2.8E-06
8:32:53 AM	99	21	21	21	2.8E-06
8:32:54 AM	99	21	21	21	2.8E-06
8:32:55 AM	99	21	20	21	2.8E-06
8:32:56 AM	99	21	21	21	2.8E-06
8:32:57 AM	99	21	20	21	2.8E-06
8:32:58 AM	99	21	21	21	2.8E-06
8:32:59 AM	99	21	20	21	2.8E-06
8:33:00 AM	99	21	21	21	2.8E-06
8:33:01 AM	99	21	21	21	2.8E-06
8:33:02 AM	99	21	21	21	2.9E-06
8:33:03 AM	99	21	21	21	2.9E-06
8:33:04 AM	99	21	20	21	2.9E-06
8:33:05 AM	99	21	21	21	2.9E-06
8:33:06 AM	99	21	21	21	2.9E-06
8:33:07 AM	99	21	20	21	2.9E-06
8:33:08 AM	99	21	21	21	2.9E-06
8:33:09 AM	99	21	21	21	2.9E-06
8:33:10 AM	99	21	21	21	3.0E-06
8:33:11 AM	99	21	21	21	2.9E-06
8:33:12 AM	99	21	21	21	2.9E-06
8:33:13 AM	99	21	21	21	3.0E-06
8:33:14 AM	99	21	20	21	3.0E-06
8:33:15 AM	99	21	21	21	3.0E-06
8:33:16 AM	99	21	21	21	3.0E-06
8:33:17 AM	99	21	21	21	3.0E-06
8:33:18 AM	99	21	21	21	3.0E-06
8:33:19 AM	99	21	21	21	3.1E-06
8:33:20 AM	99	21	21	21	3.0E-06
8:33:21 AM	99	21	21	21	3.1E-06
8:33:22 AM	99	21	21	21	3.1E-06
8:33:23 AM	99	21	21	21	3.1E-06
8:33:24 AM	99	21	21	21	3.2E-06
8:33:25 AM	99	21	21	21	3.2E-06
8:33:26 AM	99	21	21	21	3.2E-06
8:33:27 AM	99	21	21	21	3.3E-06
8:33:28 AM	99	21	21	21	3.3E-06
8:33:29 AM	99	21	21	21	3.4E-06
8:33:30 AM	99	21	21	21	3.4E-06
8:33:31 AM	99	21	20	21	3.4E-06
8:33:32 AM	99	21	21	21	3.4E-06
8:33:33 AM	99	21	21	21	3.4E-06
8:33:34 AM	99	21	21	21	3.4E-06
Averages ->	**99**	**21**	**21**	**21**	**3.0E-06**
			Maximum ->		**3.4E-06**

Yarmouth Research and Technology

Valve Description: 6 inch Class 600 Fluoroseal Plug Valve **Date:** 2/14/2010

Cycle Number: 20000

Time	Pressure (bar)	Bonnet (deg. C)	Body Temp (deg. C)	Body Temp (deg. C)	Leakage (mbar -l/sec)
8:34:23 AM	99	21	21	21	3.9E-06
8:34:24 AM	99	21	21	21	3.9E-06
8:34:25 AM	99	21	21	21	3.9E-06
8:34:26 AM	99	21	21	21	3.9E-06
8:34:27 AM	99	21	21	21	3.9E-06
8:34:28 AM	99	21	21	21	3.9E-06
8:34:29 AM	99	21	21	21	3.9E-06
8:34:30 AM	99	21	21	21	4.0E-06
8:34:31 AM	99	21	21	21	4.0E-06
8:34:32 AM	99	21	21	21	4.0E-06
8:34:33 AM	99	21	20	21	4.0E-06
8:34:34 AM	99	21	21	21	4.0E-06
8:34:35 AM	99	21	21	21	4.0E-06
8:34:36 AM	99	21	21	21	4.0E-06
8:34:37 AM	99	21	21	21	4.0E-06
8:34:38 AM	99	21	21	21	4.0E-06
8:34:39 AM	99	21	21	21	4.0E-06
8:34:40 AM	99	21	21	21	3.9E-06
8:34:41 AM	99	21	21	21	3.9E-06
8:34:42 AM	99	21	21	21	3.9E-06
8:34:43 AM	99	21	21	21	3.8E-06
8:34:44 AM	99	21	21	21	3.8E-06
8:34:45 AM	99	21	21	21	3.8E-06
8:34:46 AM	99	21	21	21	3.7E-06
8:34:47 AM	99	21	21	21	3.7E-06
8:34:48 AM	99	21	21	21	3.8E-06
8:34:49 AM	99	21	21	21	3.8E-06
8:34:50 AM	99	21	21	21	3.8E-06
8:34:51 AM	99	21	21	21	3.9E-06
8:34:52 AM	99	21	21	21	4.0E-06
8:34:53 AM	99	21	21	21	4.0E-06
8:34:54 AM	99	21	21	21	4.1E-06
8:34:55 AM	99	21	21	21	4.2E-06
8:34:56 AM	99	21	21	21	4.2E-06
8:34:57 AM	99	21	21	21	4.3E-06
8:34:58 AM	99	21	21	21	4.4E-06
8:34:59 AM	99	21	21	21	4.4E-06
8:35:00 AM	99	21	21	21	4.5E-06
8:35:01 AM	99	21	21	21	4.5E-06
8:35:02 AM	99	21	21	21	4.5E-06
8:35:03 AM	99	21	21	21	4.5E-06
8:35:04 AM	99	21	21	21	4.5E-06
8:35:05 AM	99	21	21	21	4.6E-06
8:35:06 AM	99	21	21	21	4.6E-06
8:35:07 AM	99	21	21	21	4.6E-06
8:35:08 AM	99	21	21	21	4.6E-06
8:35:09 AM	99	21	21	21	4.5E-06
8:35:10 AM	99	21	21	21	4.5E-06
8:35:11 AM	99	21	20	21	4.5E-06
8:35:12 AM	99	21	21	21	4.4E-06
8:35:13 AM	99	21	21	21	4.3E-06
8:35:14 AM	99	21	21	21	4.2E-06
8:35:15 AM	99	21	21	21	4.1E-06
8:35:16 AM	99	21	20	21	4.1E-06
8:35:17 AM	99	21	21	21	4.0E-06
8:35:18 AM	99	21	21	21	3.9E-06
8:35:19 AM	99	21	21	21	3.8E-06
8:35:20 AM	99	21	21	21	3.7E-06
8:35:21 AM	99	21	21	21	3.7E-06
8:35:22 AM	99	21	21	21	3.7E-06
Averages ->	**99**	**21**	**21**	**21**	**4.1E-06**
			Maximum ->		**4.6E-06**

Yarmouth Research and Technology

Valve Description: 6 inch Class 600 Fluoroseal Plug Valve **Date:** 2/17/2010

Cycle Number: 25000

Time	Pressure (bar)	Bonnet (deg. C)	Body Temp (deg. C)	Body Temp (deg. C)	Leakage (mbar -l/sec)
11:21:45 AM	99	22	22	22	8.7E-06
11:21:46 AM	99	22	22	22	8.8E-06
11:21:47 AM	99	22	22	22	9.0E-06
11:21:48 AM	99	22	22	22	9.1E-06
11:21:49 AM	99	22	22	22	9.2E-06
11:21:50 AM	99	22	22	22	9.4E-06
11:21:51 AM	99	22	22	22	9.5E-06
11:21:52 AM	99	22	22	22	9.3E-06
11:21:53 AM	99	22	21	22	9.1E-06
11:21:54 AM	99	22	22	22	9.1E-06
11:21:55 AM	99	22	22	22	9.4E-06
11:21:56 AM	99	22	21	22	9.3E-06
11:21:57 AM	99	22	22	22	9.2E-06
11:21:58 AM	99	22	22	22	9.0E-06
11:21:59 AM	99	22	21	22	9.0E-06
11:22:00 AM	99	22	22	22	9.1E-06
11:22:01 AM	99	22	22	22	9.2E-06
11:22:02 AM	99	22	22	22	9.1E-06
11:22:03 AM	99	22	22	22	9.1E-06
11:22:04 AM	99	22	22	22	9.2E-06
11:22:05 AM	99	22	22	22	9.3E-06
11:22:06 AM	99	22	22	22	9.3E-06
11:22:07 AM	99	22	22	22	9.4E-06
11:22:08 AM	99	22	22	22	9.3E-06
11:22:09 AM	99	22	22	22	9.4E-06
11:22:10 AM	99	22	22	22	9.4E-06
11:22:11 AM	99	22	22	22	9.1E-06
11:22:12 AM	99	22	21	22	8.8E-06
11:22:13 AM	99	22	22	22	8.7E-06
11:22:14 AM	99	22	22	22	8.6E-06
11:22:15 AM	99	22	22	22	8.6E-06
11:22:16 AM	99	22	21	22	8.6E-06
11:22:17 AM	99	22	22	22	8.7E-06
11:22:18 AM	99	22	21	22	8.7E-06
11:22:19 AM	99	21	22	22	8.8E-06
11:22:20 AM	99	22	22	22	8.8E-06
11:22:21 AM	99	22	22	22	8.9E-06
11:22:22 AM	99	22	22	22	8.8E-06
11:22:23 AM	99	22	22	22	8.9E-06
11:22:24 AM	99	22	22	22	8.8E-06
11:22:25 AM	99	22	22	22	8.9E-06
11:22:26 AM	99	22	22	22	8.8E-06
11:22:27 AM	99	22	22	22	8.6E-06
11:22:28 AM	99	22	22	22	8.6E-06
11:22:29 AM	99	22	22	22	8.6E-06
11:22:30 AM	99	22	22	22	8.6E-06
11:22:31 AM	99	21	22	22	8.6E-06
11:22:32 AM	99	22	22	22	8.3E-06
11:22:33 AM	99	22	21	22	8.3E-06
11:22:34 AM	99	22	22	22	8.3E-06
11:22:35 AM	99	22	22	22	8.1E-06
11:22:36 AM	99	22	22	22	7.9E-06
11:22:37 AM	99	22	22	22	7.9E-06
11:22:38 AM	99	22	22	22	7.7E-06
11:22:39 AM	99	22	22	22	7.6E-06
11:22:40 AM	99	22	22	22	7.6E-06
11:22:41 AM	99	22	22	22	7.5E-06
11:22:42 AM	99	22	22	22	7.5E-06
11:22:43 AM	99	22	21	22	7.3E-06
11:22:44 AM	99	22	22	22	7.5E-06
Averages ->	**99**	**22**	**22**	**22**	**8.7E-06**
			Maximum ->		**9.5E-06**

Yarmouth Research and Technology

Valve Description: 6 inch Class 600 Fluoroseal Plug Valve **Date:** 2/17/2010

Cycle Number: 25000

Time	Pressure (bar)	Bonnet (deg. C)	Body Temp (deg. C)	Body Temp (deg. C)	Leakage (mbar -l/sec)
11:23:29 AM	99	22	22	22	6.7E-06
11:23:30 AM	99	22	22	22	6.5E-06
11:23:31 AM	99	22	22	22	6.3E-06
11:23:32 AM	99	22	22	22	6.4E-06
11:23:33 AM	99	22	22	22	6.4E-06
11:23:34 AM	99	22	22	22	6.3E-06
11:23:35 AM	99	22	22	22	6.4E-06
11:23:36 AM	99	22	21	22	6.4E-06
11:23:37 AM	99	22	22	22	6.3E-06
11:23:38 AM	99	22	22	22	6.6E-06
11:23:39 AM	99	22	22	22	6.9E-06
11:23:40 AM	99	22	22	22	6.8E-06
11:23:41 AM	99	22	22	22	6.8E-06
11:23:42 AM	99	22	22	22	7.1E-06
11:23:43 AM	99	22	22	22	7.2E-06
11:23:44 AM	99	22	22	22	7.1E-06
11:23:45 AM	99	22	22	22	7.1E-06
11:23:46 AM	99	22	22	22	7.3E-06
11:23:47 AM	99	22	22	22	7.5E-06
11:23:48 AM	99	22	21	22	7.3E-06
11:23:49 AM	99	22	22	22	7.1E-06
11:23:50 AM	99	22	22	22	7.3E-06
11:23:51 AM	99	22	22	22	7.3E-06
11:23:52 AM	99	22	22	22	7.3E-06
11:23:53 AM	99	22	22	22	7.1E-06
11:23:54 AM	99	22	22	22	6.4E-06
11:23:55 AM	99	22	22	22	6.6E-06
11:23:56 AM	99	22	22	22	6.8E-06
11:23:57 AM	99	22	21	22	6.6E-06
11:23:58 AM	99	22	22	22	6.8E-06
11:23:59 AM	99	22	22	22	6.2E-06
11:24:00 AM	99	22	22	22	6.1E-06
11:24:01 AM	99	22	22	22	6.0E-06
11:24:02 AM	99	22	22	22	5.8E-06
11:24:03 AM	99	22	22	22	5.8E-06
11:24:04 AM	99	22	22	22	5.8E-06
11:24:05 AM	99	22	22	22	5.9E-06
11:24:06 AM	99	22	22	22	5.9E-06
11:24:07 AM	99	22	21	22	5.9E-06
11:24:08 AM	99	22	22	22	5.8E-06
11:24:09 AM	99	22	22	22	5.8E-06
11:24:10 AM	99	22	22	22	5.9E-06
11:24:11 AM	99	22	22	22	5.8E-06
11:24:12 AM	99	22	22	22	5.8E-06
11:24:13 AM	99	22	22	22	5.8E-06
11:24:14 AM	99	22	22	22	5.8E-06
11:24:15 AM	99	22	22	22	5.8E-06
11:24:16 AM	99	22	22	22	5.9E-06
11:24:17 AM	99	22	22	22	5.8E-06
11:24:18 AM	99	22	22	22	5.8E-06
11:24:19 AM	99	22	22	22	5.8E-06
11:24:20 AM	99	22	21	22	5.8E-06
11:24:21 AM	99	22	22	22	5.6E-06
11:24:22 AM	99	22	22	22	5.6E-06
11:24:23 AM	99	22	22	22	5.5E-06
11:24:24 AM	99	22	22	22	5.4E-06
11:24:25 AM	99	22	22	22	5.4E-06
11:24:26 AM	99	22	22	22	5.3E-06
11:24:27 AM	99	22	22	22	5.4E-06
11:24:28 AM	99	22	22	22	5.4E-06
Averages ->	**99**	**22**	**22**	**22**	**6.3E-06**
			Maximum ->		**7.5E-06**

Yarmouth Research and Technology

Valve Description: 6 inch Class 600 Fluoroseal Plug Valve **Date:** 2/1/2010

Cycle Number: Start of Test - Bonnet Gasket Static Leakage

Time	Pressure (bar)	Bonnet (deg. C)	Body Temp (deg. C)	Body Temp ss 600 Fluoroseal I	Leakage (mbar -l/sec)
8:47:44 AM	99	21	20	21	1.1E-06
8:47:45 AM	99	21	21	22	1.1E-06
8:47:46 AM	99	21	20	21	1.1E-06
8:47:47 AM	99	21	21	21	1.1E-06
8:47:48 AM	99	21	21	22	1.1E-06
8:47:49 AM	99	21	20	22	1.1E-06
8:47:50 AM	99	21	20	21	1.1E-06
8:47:51 AM	99	21	21	22	1.1E-06
8:47:52 AM	99	21	21	21	1.1E-06
8:47:53 AM	99	21	20	21	1.1E-06
8:47:54 AM	99	21	21	21	1.1E-06
8:47:55 AM	99	21	21	21	1.1E-06
8:47:56 AM	99	21	20	21	1.1E-06
8:47:57 AM	99	21	21	21	1.1E-06
8:47:58 AM	99	20	21	21	1.1E-06
8:47:59 AM	99	21	20	21	1.1E-06
8:48:00 AM	99	21	21	21	1.1E-06
8:48:01 AM	99	21	21	21	1.1E-06
8:48:02 AM	99	21	21	21	1.1E-06
8:48:03 AM	99	21	20	21	1.1E-06
8:48:04 AM	99	21	20	22	1.1E-06
8:48:05 AM	99	21	20	21	1.1E-06
8:48:06 AM	99	21	21	22	1.1E-06
8:48:07 AM	99	21	20	21	1.1E-06
8:48:08 AM	99	21	21	21	1.1E-06
8:48:09 AM	99	21	20	22	1.1E-06
8:48:10 AM	99	21	20	21	1.1E-06
8:48:11 AM	99	20	20	21	1.1E-06
8:48:12 AM	99	21	21	22	1.1E-06
8:48:13 AM	99	21	21	21	1.1E-06
8:48:14 AM	99	21	20	21	1.1E-06
8:48:15 AM	99	21	20	21	1.1E-06
8:48:16 AM	99	21	20	22	1.1E-06
8:48:17 AM	99	21	21	22	1.1E-06
8:48:18 AM	99	21	20	21	1.1E-06
8:48:19 AM	99	21	21	21	1.1E-06
8:48:20 AM	99	21	21	21	1.1E-06
8:48:21 AM	99	21	21	22	1.1E-06
8:48:22 AM	99	21	21	22	1.1E-06
8:48:23 AM	99	21	20	21	1.1E-06
8:48:24 AM	99	21	21	21	1.1E-06
8:48:25 AM	99	21	21	22	1.1E-06
8:48:26 AM	99	21	20	21	1.1E-06
8:48:27 AM	99	21	21	22	1.1E-06
8:48:28 AM	99	21	20	22	1.1E-06
8:48:29 AM	99	20	21	21	1.1E-06
8:48:30 AM	99	21	21	22	1.1E-06
8:48:31 AM	99	21	21	22	1.1E-06
8:48:32 AM	99	21	21	21	1.1E-06
8:48:33 AM	99	21	21	22	1.1E-06
8:48:34 AM	99	21	21	22	1.1E-06
8:48:35 AM	99	21	21	21	1.1E-06
8:48:36 AM	99	21	21	21	1.1E-06
8:48:37 AM	99	21	21	22	1.1E-06
8:48:38 AM	99	21	20	22	1.1E-06
8:48:39 AM	99	21	20	22	1.1E-06
8:48:40 AM	99	21	20	22	1.1E-06
8:48:41 AM	99	21	20	21	1.1E-06
8:48:42 AM	99	21	20	21	1.1E-06
8:48:43 AM	99	21	21	22	1.1E-06
Averages ->	**99**	**21**	**21**	**21**	**1.1E-06**
			Maximum ->		**1.1E-06**

Fugitive Emission Test Report

VDI 2440 Test Standard

Performed for

Fluoroseal Specialty Valves

www.fluorosealvalves.com

8" Class 600 Fluoroseal Plug Valve
Standard Seal Configuration
Model 602F
Ambient Temperature
Project Number: 210036

February 2010

Performed by

YARMOUTH RESEARCH AND TECHNOLOGY, LLC

434 Walnut Hill Road
N. Yarmouth, ME 04097 USA
(207) 829-5359
info@yarmouthresearch.com
www.yarmouthresearch.com

Yarmouth Research and Technology

VDI 2440 Fugitive Emission Test Summary Sheet

Customer:	**Fluoroseal Specialty Valves**	**Date:**	1-Feb-10
Project Number:	210036		
Product Description:	8 inch Class 600 Fluoroseal Plug Valve		
	Std., Model 602F, S/N 10/012312S		
	WCB Body, CF8M Plug, 1440 psig		
Packing Description:	Hi-Temp Sleeve		
Stem Diameter (mm):	64.5	**Circumference:**	0.203 meter
Mean Bonnet Diameter (mm):	147	**Circumference:**	0.462 meter

Test Temperature:	Ambient	**Test Pressure (bar):**	102
Cycling Rate:	once per 50 seconds		
Leakage Device:	Pfeiffer HLT-560		
Pressure Gauge:	PG-2000-1	**Thermocouple Type:**	K

Maximum Allowable Leakage: 10-4 mbar-l/sec per mean seal circumference (m) for < 250C

Calculated Values: Stem Seal: 2.0E-05 mbar-l/sec

Bonnet Seal: 4.6E-05 mbar-l/sec

Test Results:

Bonnet Gasket Leakage:	Leakage Reading:	4.6E-07 mbar-l/sec
	Allowable:	4.6E-05 mbar-l/sec
	Was Leakage Below Allowable:	**Yes**
Stem Seal Leakage:		
	Leakage Reading at 0 Cycles:	4.7E-07 mbar-l/sec
	Leakage Reading at 25,000 Cycles:	6.5E-06 mbar-l/sec
	Allowable:	2.0E-05 mbar-l/sec
	Were Leakages Below Allowable:	**Yes**

Valves passes requirements of VDI2440 at ambient temperature for 25,000 mechanical cycles.

Witness

President, Yarmouth Research and Technology

STATE OF MAINE
MATTHEW J WASIELEWSKI
No. 7437
LICENSED
PROFESSIONAL ENGINEER

This drawing and the information herein contained is the property of FluoroSeal Specialty Valves and/or its subsidiaries and is supplied upon the express conditions that the same be returned to FluoroSeal Specialty Valves upon request; all information herein contained is to be treated as secret and confidential; no reproduction of this drawing or any part thereof shall be made without the written permission of FluoroSeal Specialty Valves; acceptance of this drawing shall be deemed acceptance of the foregoing conditions.

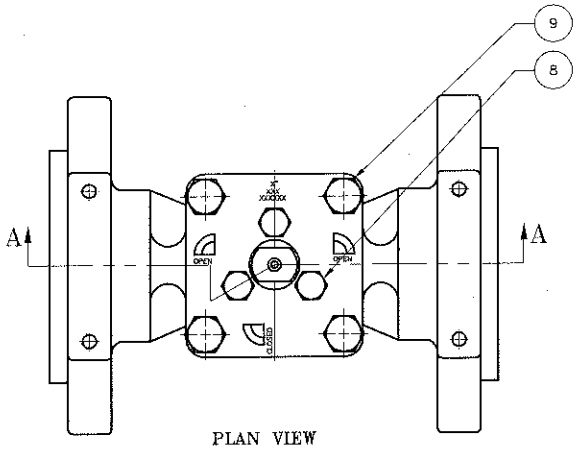

PLAN VIEW

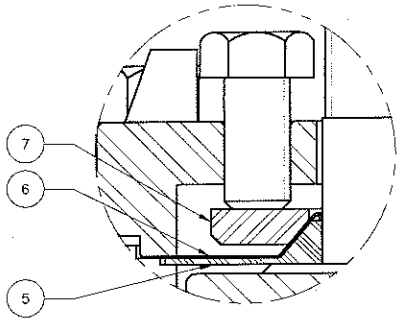

DETAIL A

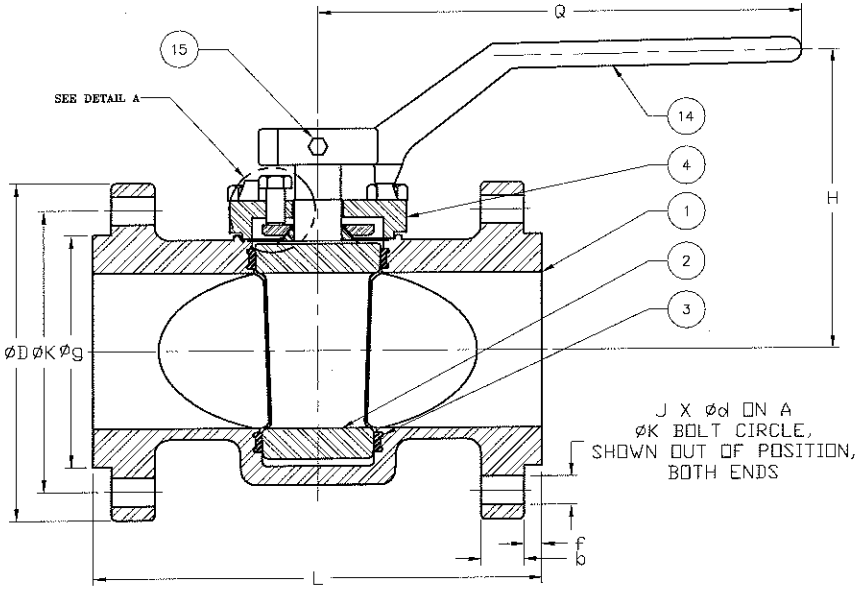

SECTIONA-A

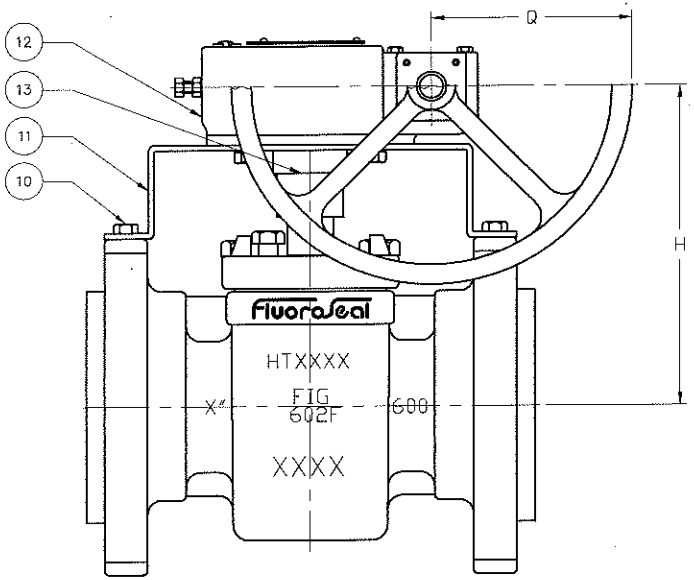

VIEW W/GEAR SHOW

REV	DESCRIPTION	DATE	DFTR	APVD
0	SEE #NPD-0610	2008/08/11	K.D.	S.E.

REVISION

This drawing and the information herein contained is the property of FluoroSeal Specialty Valves and/or its subsidiaries and is supplied upon the express conditions that the same be returned to FluoroSeal Specialty Valves upon request; all information herein contained is to be treated as secret and confidential; no reproduction of this drawing or any part thereof shall be made without the written permission of FluoroSeal Specialty Valves; acceptance of this drawing shall be deemed acceptance of the foregoing conditions.

FluoroSeal SPECIALITY VALVES
1875, 46e Avenue Lachine
Montreal QC, H8T 2N8
TEL: (514)739-0220
FAX: (514)739-5452

TITLE: FLUOROSEAL PLUG VALVE
1/2" TO 14" 602F ASSEMBLY
STD. CONFIG.

SIZE	DWG NO.	REV
A	ASS-602-F-STD-05-19	0

DRAWN BY: K.DEBCHI	DATE: 2008/08/11	SCALE: N.T.S
CHKD BY: S.ELFASHNY	DATE: 2008/08/11	SHEET: 1/2

THIRD ANGLE PROJECTION DO NOT SCALE DRAWING

Yarmouth Research and Technology

Yarmouth Research Addendum to VDI 2440 (2000)

Scope: This addendum provides additional information and recommendations for valve tests performed according to VDI 2440. This does not supersede the VDI specification. Recommendations for sliding stem on-off valves (gates/globes), quarter-turn valves (ball, butterfly, plug, etc) and control valves are covered by this addendum.

Test Parameters:

Test Fluid	99% minimum purity helium		
Test Pressure	Full rated pressure at test temperature		
Temperature:	Ambient, 200C or 400C (or as stated by mfgr)		
Number of Mechanical Cycles	**Valve Type**	**Minimum**	**Extended**
	Gate/Globes	100	500
	Quarter Turns	1000	5000
	Control	1000	25000
Allowable Leakage:	1 x 10-4 mbar-l/sec per meter of mean seal circumference for temperatures at or below 250C 1 x 10-2 mbar-l/sec per meter of mean seal circumference for temperatures greater than 250C		

Test Procedure:

1. Assemble valves with suitable flanges, fittings and gaskets for the test conditions.
2. Calculate maximum allowable leakage of seals and gaskets by multiplying the above maximum allowable leakage rate by the mean seal diameter(meters)
3. For tests at a temperature greater than ambient, heat insulated valve to required temperature. Tolerance on temperature shall be +/- 5 degree C. Ambient temperature shall be 15-27 degree C. Thermocouple shall be inserted into the valve body near the stem seals.
4. After temperature has stabilized, pressurize valve with helium to the rated pressure. Tolerance on pressure shall be +/- 5%
5. Check fittings, gaskets, etc for leakage and adjust as required.
6. Adjust packing gland nuts to manufacturer's recommended torque.
7. Hold pressure for a minimum of 24 hours prior to leakage readings.
8. Cycle valve to "Minimum" cycle number stated above.
9. Create a small chamber around the stem seal area using AL foil and foil tape. The enclosure shall have a small diameter tube inside the chamber at the uppermost position, so that the rising helium leakage is collected.
10. Calibrate mass spectrometer with known leak rate. Zero meter to atmospheric conditions.
11. Attach the mass spectrometer leakage probe to the stem seal chamber tube.
12. After a 5 minute duration or until the leakage as stabilized, record the leakage over a 1 minute duration. Record the highest leakage.
13. Cycle the valve 1 time and record leakage reading during and after the cycling is completed to record maximum leakage.
14. If leakage is below the allowable, the additional cycles may be performed on the valve to the "Extended" cycle number and steps 11-13 shall be repeated.

FluoroSeal

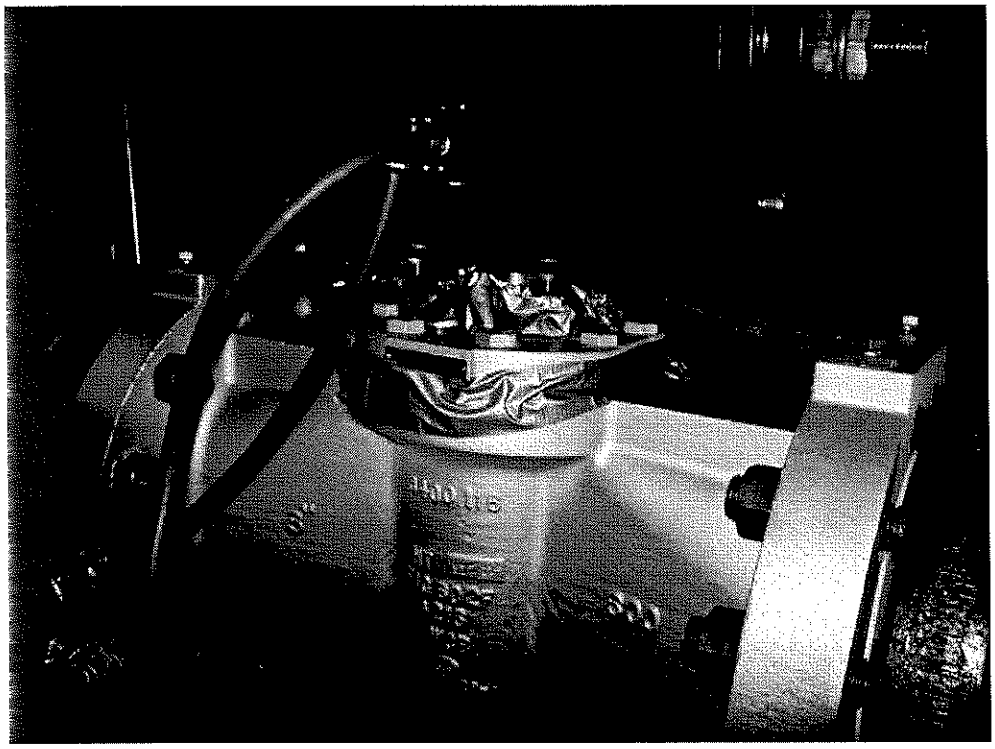

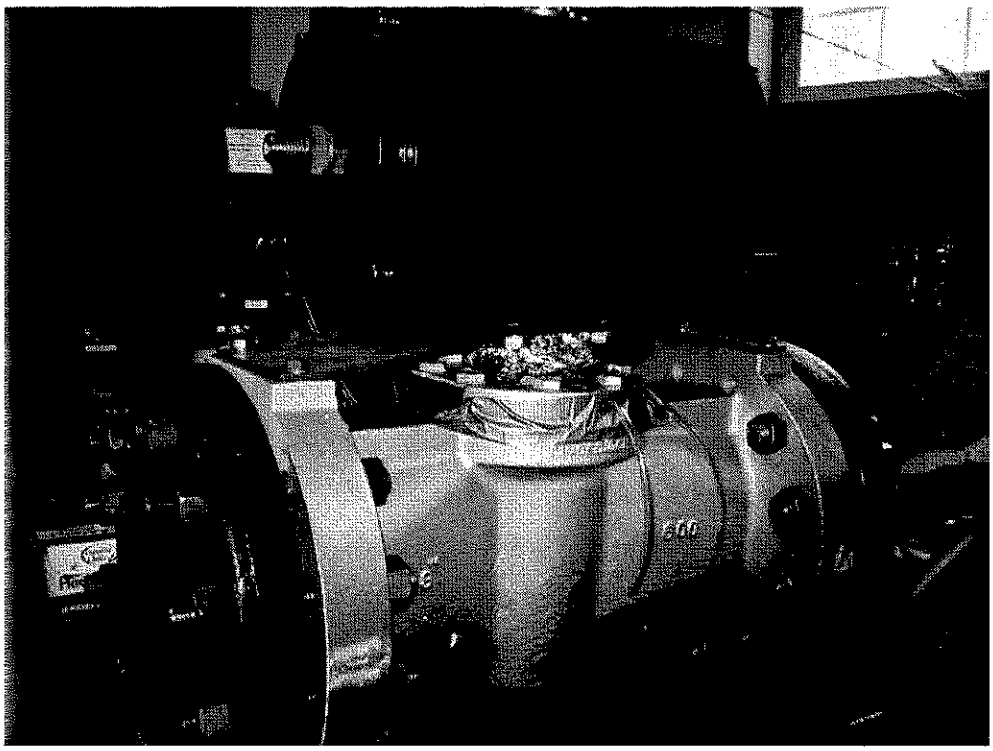

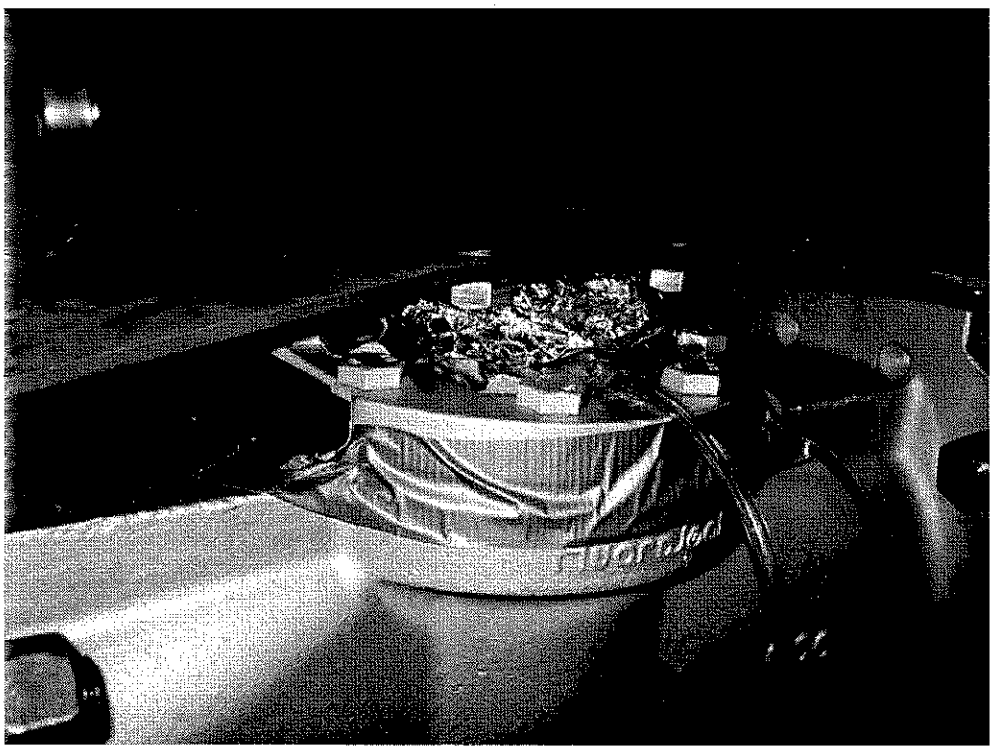

Yarmouth Research and Technology

Valve Description: 8 inch Class 600 Fluoroseal Plug Valve **Date:** 2/1/2010

Cycle Number: 0

Time	Pressure (bar)	Bonnet (deg. C)	Body Temp (deg. C)	Body Temp (deg. C)	Leakage (mbar -l/sec)
			Std., Model 602F, S/N 10/012312S		
8:41:48 AM	102	21	21	21	2.3E-07
8:41:49 AM	102	21	20	22	2.3E-07
8:41:50 AM	102	21	21	21	2.3E-07
8:41:51 AM	102	21	20	21	2.3E-07
8:41:52 AM	102	21	20	21	2.3E-07
8:41:53 AM	102	21	21	21	2.4E-07
8:41:54 AM	102	21	20	21	2.4E-07
8:41:55 AM	102	21	20	21	2.5E-07
8:41:56 AM	102	21	20	21	2.6E-07
8:41:57 AM	102	21	21	22	2.7E-07
8:41:58 AM	102	21	20	21	2.8E-07
8:41:59 AM	102	21	20	21	2.8E-07
8:42:00 AM	102	21	21	21	2.9E-07
8:42:01 AM	102	21	20	21	2.9E-07
8:42:02 AM	102	21	21	21	3.0E-07
8:42:03 AM	102	21	21	22	3.0E-07
8:42:04 AM	102	21	20	22	3.2E-07
8:42:05 AM	102	21	21	21	3.3E-07
8:42:06 AM	102	21	20	21	3.4E-07
8:42:07 AM	102	21	21	21	3.6E-07
8:42:08 AM	102	21	20	21	3.7E-07
8:42:09 AM	102	21	21	21	3.8E-07
8:42:10 AM	102	21	20	21	3.8E-07
8:42:11 AM	102	20	20	21	3.9E-07
8:42:12 AM	102	21	21	21	3.8E-07
8:42:13 AM	102	20	20	21	3.9E-07
8:42:14 AM	102	21	20	21	4.0E-07
8:42:15 AM	102	21	21	21	4.0E-07
8:42:16 AM	102	21	21	21	3.9E-07
8:42:17 AM	102	21	20	21	4.0E-07
8:42:18 AM	102	21	21	21	4.0E-07
8:42:19 AM	102	21	20	21	3.9E-07
8:42:20 AM	102	21	20	21	3.9E-07
8:42:21 AM	102	21	21	22	3.8E-07
8:42:22 AM	102	21	20	21	3.8E-07
8:42:23 AM	102	20	21	21	3.8E-07
8:42:24 AM	102	21	21	21	3.9E-07
8:42:25 AM	102	20	20	21	3.9E-07
8:42:26 AM	102	21	21	21	4.0E-07
8:42:27 AM	102	21	21	22	4.1E-07
8:42:28 AM	102	21	20	21	4.2E-07
8:42:29 AM	102	21	20	21	4.3E-07
8:42:30 AM	102	21	21	21	4.5E-07
8:42:31 AM	102	20	20	21	4.6E-07
8:42:32 AM	102	21	20	21	4.7E-07
8:42:33 AM	102	21	21	22	4.7E-07
8:42:34 AM	102	21	20	21	4.7E-07
8:42:35 AM	102	21	20	21	4.7E-07
8:42:36 AM	102	21	20	21	4.7E-07
8:42:37 AM	102	21	20	22	4.6E-07
8:42:38 AM	102	20	20	21	4.5E-07
8:42:39 AM	102	21	20	21	4.4E-07
8:42:40 AM	102	21	21	21	4.3E-07
8:42:41 AM	102	20	20	21	4.2E-07
8:42:42 AM	102	21	21	22	4.2E-07
8:42:43 AM	102	21	21	21	4.2E-07
8:42:44 AM	102	21	20	21	4.1E-07
8:42:45 AM	102	21	20	21	4.1E-07
8:42:46 AM	102	21	21	21	4.1E-07
8:42:47 AM	102	21	20	21	4.2E-07
Averages ->	**102**	**21**	**20**	**21**	**3.7E-07**
			Maximum ->		**4.7E-07**

Yarmouth Research and Technology

Valve Description: 8 inch Class 600 Fluoroseal Plug Valve **Date:** 2/1/2010

Cycle Number: 0

Time	Pressure (bar)	Bonnet (deg. C)	Body Temp (deg. C)	Body Temp (deg. C)	Leakage (mbar -l/sec)
8:43:13 AM	102	21	21	22	4.5E-07
8:43:14 AM	102	21	20	21	4.6E-07
8:43:15 AM	102	21	21	21	4.6E-07
8:43:16 AM	102	21	21	21	4.7E-07
8:43:17 AM	102	21	20	21	4.7E-07
8:43:18 AM	102	21	20	21	4.7E-07
8:43:19 AM	102	21	21	21	4.8E-07
8:43:20 AM	102	21	20	21	4.7E-07
8:43:21 AM	102	21	20	21	4.7E-07
8:43:22 AM	102	21	21	22	4.6E-07
8:43:23 AM	102	21	20	21	4.4E-07
8:43:24 AM	102	21	21	21	4.3E-07
8:43:25 AM	102	21	21	21	4.3E-07
8:43:26 AM	102	21	20	21	4.2E-07
8:43:27 AM	102	21	20	21	4.1E-07
8:43:28 AM	102	21	21	21	4.0E-07
8:43:29 AM	102	21	20	21	3.9E-07
8:43:30 AM	102	21	21	21	3.8E-07
8:43:31 AM	102	21	21	21	3.8E-07
8:43:32 AM	102	21	20	21	3.8E-07
8:43:33 AM	102	21	21	21	3.9E-07
8:43:34 AM	102	21	21	21	3.9E-07
8:43:35 AM	102	21	21	22	3.9E-07
8:43:36 AM	102	21	20	21	4.1E-07
8:43:37 AM	102	21	21	21	4.2E-07
8:43:38 AM	102	21	20	21	4.2E-07
8:43:39 AM	102	21	20	21	4.2E-07
8:43:40 AM	102	21	21	21	4.2E-07
8:43:41 AM	102	21	20	21	4.3E-07
8:43:42 AM	102	21	21	21	4.3E-07
8:43:43 AM	102	21	20	21	4.2E-07
8:43:44 AM	102	21	20	21	4.1E-07
8:43:45 AM	102	21	21	22	4.0E-07
8:43:46 AM	102	21	20	21	3.9E-07
8:43:47 AM	102	21	20	21	3.9E-07
8:43:48 AM	102	21	21	21	3.9E-07
8:43:49 AM	102	21	21	22	3.9E-07
8:43:50 AM	102	21	20	21	4.0E-07
8:43:51 AM	102	21	21	21	4.0E-07
8:43:52 AM	102	21	21	22	4.1E-07
8:43:53 AM	102	21	20	21	4.1E-07
8:43:54 AM	102	21	21	21	4.2E-07
8:43:55 AM	102	21	20	21	4.3E-07
8:43:56 AM	102	21	20	21	4.3E-07
8:43:57 AM	102	21	21	21	4.4E-07
8:43:58 AM	102	21	20	22	4.6E-07
8:43:59 AM	102	21	21	21	4.7E-07
8:44:00 AM	102	21	20	22	4.8E-07
8:44:01 AM	102	21	21	21	4.8E-07
8:44:02 AM	102	21	20	21	4.8E-07
8:44:03 AM	102	21	21	22	4.9E-07
8:44:04 AM	102	21	20	22	4.9E-07
8:44:05 AM	102	21	20	21	4.8E-07
8:44:06 AM	102	21	21	21	4.8E-07
8:44:07 AM	102	21	20	22	4.7E-07
8:44:08 AM	102	21	20	21	4.6E-07
8:44:09 AM	102	21	21	21	4.6E-07
8:44:10 AM	102	21	21	22	4.6E-07
8:44:11 AM	102	20	21	21	4.5E-07
8:44:12 AM	102	21	21	22	4.4E-07
Averages ->	**102**	**21**	**21**	**21**	**4.3E-07**
			Maximum ->		**4.9E-07**

Yarmouth Research and Technology

Valve Description: 8 inch Class 600 Fluoroseal Plug Valve **Date:** 2/2/2010

Cycle Number: 1000

Time	Pressure (bar)	Bonnet (deg. C)	Body Temp (deg. C)	Body Temp (deg. C)	Leakage (mbar -l/sec)
2:42:04 PM	102	22	22	22	2.0E-07
2:42:05 PM	102	22	22	22	2.0E-07
2:42:06 PM	102	22	22	22	2.0E-07
2:42:07 PM	102	22	22	22	2.0E-07
2:42:08 PM	102	22	22	22	2.1E-07
2:42:09 PM	102	22	22	22	2.1E-07
2:42:10 PM	102	22	22	22	2.2E-07
2:42:11 PM	102	22	22	22	2.2E-07
2:42:12 PM	102	22	22	22	2.4E-07
2:42:13 PM	102	22	22	22	2.4E-07
2:42:14 PM	102	22	22	23	2.5E-07
2:42:15 PM	102	22	22	22	2.5E-07
2:42:16 PM	102	22	22	22	2.4E-07
2:42:17 PM	102	22	22	22	2.5E-07
2:42:18 PM	102	22	22	22	2.5E-07
2:42:19 PM	102	22	22	22	2.4E-07
2:42:20 PM	102	22	22	22	2.4E-07
2:42:21 PM	102	22	22	22	2.3E-07
2:42:22 PM	102	22	22	22	2.2E-07
2:42:23 PM	102	22	22	22	2.2E-07
2:42:24 PM	102	22	21	22	2.2E-07
2:42:25 PM	102	22	22	22	2.2E-07
2:42:26 PM	102	22	22	22	2.2E-07
2:42:27 PM	102	22	22	22	2.2E-07
2:42:28 PM	102	22	22	22	2.2E-07
2:42:29 PM	102	22	22	22	2.3E-07
2:42:30 PM	102	22	22	22	2.3E-07
2:42:31 PM	102	22	22	22	2.3E-07
2:42:32 PM	102	22	22	22	2.3E-07
2:42:33 PM	102	22	22	22	2.3E-07
2:42:34 PM	102	22	22	22	2.4E-07
2:42:35 PM	102	22	22	22	2.5E-07
2:42:36 PM	102	22	22	22	2.6E-07
2:42:37 PM	102	22	22	22	2.7E-07
2:42:38 PM	102	22	22	22	2.8E-07
2:42:39 PM	102	22	22	22	2.9E-07
2:42:40 PM	102	22	22	22	3.0E-07
2:42:41 PM	102	22	22	22	3.1E-07
2:42:42 PM	102	22	22	22	3.1E-07
2:42:43 PM	102	22	22	22	3.0E-07
2:42:44 PM	102	22	22	22	3.1E-07
2:42:45 PM	102	22	22	22	3.0E-07
2:42:46 PM	102	22	22	22	2.9E-07
2:42:47 PM	102	22	22	22	2.9E-07
2:42:48 PM	102	22	22	22	2.8E-07
2:42:49 PM	102	22	22	22	2.8E-07
2:42:50 PM	102	22	22	22	2.8E-07
2:42:51 PM	102	22	22	22	2.7E-07
2:42:52 PM	102	22	22	22	2.7E-07
2:42:53 PM	102	22	22	23	2.7E-07
2:42:54 PM	102	22	22	22	2.7E-07
2:42:55 PM	102	22	22	22	2.6E-07
2:42:56 PM	102	22	22	22	2.5E-07
2:42:57 PM	102	22	22	22	2.5E-07
2:42:58 PM	102	22	22	22	2.4E-07
2:42:59 PM	102	22	22	22	2.5E-07
2:43:00 PM	102	22	22	22	2.5E-07
2:43:01 PM	102	22	22	22	2.5E-07
2:43:02 PM	102	22	22	22	2.6E-07
2:43:03 PM	102	22	22	22	2.7E-07
Averages ->	**102**	**22**	**22**	**22**	**2.5E-07**
			Maximum ->		**3.1E-07**

Yarmouth Research and Technology

Valve Description: 8 inch Class 600 Fluoroseal Plug Valve **Date:** 2/2/2010

Cycle Number: 1000

Time	Pressure (bar)	Bonnet (deg. C)	Body Temp (deg. C)	Body Temp (deg. C)	Leakage (mbar -l/sec)
2:43:36 PM	102	22	22	22	2.8E-07
2:43:37 PM	102	22	22	22	2.7E-07
2:43:38 PM	102	22	22	22	2.6E-07
2:43:39 PM	102	22	22	22	2.5E-07
2:43:40 PM	102	22	22	22	2.4E-07
2:43:41 PM	102	22	22	23	2.3E-07
2:43:42 PM	102	22	21	22	2.2E-07
2:43:43 PM	102	22	22	22	2.1E-07
2:43:44 PM	102	22	22	22	2.0E-07
2:43:45 PM	102	22	22	22	2.0E-07
2:43:46 PM	102	22	22	22	1.9E-07
2:43:47 PM	102	22	22	22	1.8E-07
2:43:48 PM	102	22	21	22	1.8E-07
2:43:49 PM	102	22	22	22	1.8E-07
2:43:50 PM	102	22	22	22	1.9E-07
2:43:51 PM	102	22	22	22	2.0E-07
2:43:52 PM	102	22	22	22	2.1E-07
2:43:53 PM	102	22	22	22	2.3E-07
2:43:54 PM	102	22	22	22	2.3E-07
2:43:55 PM	102	22	22	22	2.4E-07
2:43:56 PM	102	22	22	22	2.4E-07
2:43:57 PM	102	22	22	22	2.4E-07
2:43:58 PM	102	22	22	22	2.4E-07
2:43:59 PM	102	22	22	22	2.4E-07
2:44:00 PM	102	22	22	22	2.3E-07
2:44:01 PM	102	22	22	22	2.4E-07
2:44:02 PM	102	22	22	22	2.3E-07
2:44:03 PM	102	22	22	22	2.3E-07
2:44:04 PM	102	22	22	22	2.3E-07
2:44:05 PM	102	22	22	22	2.3E-07
2:44:06 PM	102	22	22	22	2.3E-07
2:44:07 PM	102	22	22	22	2.3E-07
2:44:08 PM	102	22	22	22	2.2E-07
2:44:09 PM	102	22	22	22	2.3E-07
2:44:10 PM	102	22	22	22	2.3E-07
2:44:11 PM	102	22	22	22	2.4E-07
2:44:12 PM	102	22	22	22	2.5E-07
2:44:13 PM	102	22	22	22	2.5E-07
2:44:14 PM	102	22	22	22	2.5E-07
2:44:15 PM	102	22	21	22	2.6E-07
2:44:16 PM	102	22	22	22	2.8E-07
2:44:17 PM	102	22	22	22	2.7E-07
2:44:18 PM	102	22	21	22	2.8E-07
2:44:19 PM	102	22	22	22	2.8E-07
2:44:20 PM	102	22	22	22	2.7E-07
2:44:21 PM	102	22	22	22	2.7E-07
2:44:22 PM	102	22	22	22	2.7E-07
2:44:23 PM	102	22	22	22	2.7E-07
2:44:24 PM	102	22	22	22	2.5E-07
2:44:25 PM	102	22	22	22	2.5E-07
2:44:26 PM	102	22	22	23	2.5E-07
2:44:27 PM	102	22	21	22	2.5E-07
2:44:28 PM	102	22	22	22	2.4E-07
2:44:29 PM	102	21	22	22	2.4E-07
2:44:30 PM	102	22	22	22	2.5E-07
2:44:31 PM	102	22	22	22	2.5E-07
2:44:32 PM	102	22	22	22	2.5E-07
2:44:33 PM	102	22	22	22	2.5E-07
2:44:34 PM	102	22	22	22	2.5E-07
2:44:35 PM	102	22	22	22	2.4E-07
Averages ->	**102**	**22**	**22**	**22**	**2.4E-07**
			Maximum ->		**2.8E-07**

Yarmouth Research and Technology

Valve Description: 8 inch Class 600 Fluoroseal Plug Valve **Date:** 2/5/2010

Cycle Number: 5000

Time	Pressure (bar)	Bonnet (deg. C)	Body Temp (deg. C)	Body Temp (deg. C)	Leakage (mbar -l/sec)
10:43:03 AM	102	20	20	20	3.7E-07
10:43:04 AM	102	20	20	20	3.7E-07
10:43:05 AM	102	20	20	20	3.7E-07
10:43:06 AM	102	20	20	20	3.8E-07
10:43:07 AM	102	20	20	20	3.9E-07
10:43:08 AM	102	20	20	20	3.9E-07
10:43:09 AM	102	20	20	20	3.9E-07
10:43:10 AM	102	20	20	20	3.9E-07
10:43:11 AM	102	20	20	20	4.0E-07
10:43:12 AM	102	20	20	20	4.0E-07
10:43:13 AM	102	20	20	20	4.0E-07
10:43:14 AM	102	20	20	20	4.0E-07
10:43:15 AM	102	20	20	20	4.0E-07
10:43:16 AM	102	20	20	20	3.9E-07
10:43:17 AM	102	20	20	20	3.9E-07
10:43:18 AM	102	20	20	20	3.8E-07
10:43:19 AM	102	20	20	20	3.7E-07
10:43:20 AM	102	20	20	20	3.6E-07
10:43:21 AM	102	20	20	20	3.6E-07
10:43:22 AM	102	20	20	20	3.5E-07
10:43:23 AM	102	20	20	20	3.4E-07
10:43:24 AM	102	20	20	20	3.4E-07
10:43:25 AM	102	20	20	20	3.4E-07
10:43:26 AM	102	20	20	20	3.4E-07
10:43:27 AM	102	20	20	20	3.5E-07
10:43:28 AM	102	20	20	20	3.5E-07
10:43:29 AM	102	20	20	20	3.5E-07
10:43:30 AM	102	20	20	20	3.5E-07
10:43:31 AM	102	20	20	20	3.5E-07
10:43:32 AM	102	20	20	20	3.5E-07
10:43:33 AM	102	20	20	20	3.5E-07
10:43:34 AM	102	20	20	20	3.5E-07
10:43:35 AM	102	20	20	20	3.5E-07
10:43:36 AM	102	20	20	20	3.5E-07
10:43:37 AM	102	20	20	20	3.5E-07
10:43:38 AM	102	20	20	20	3.6E-07
10:43:39 AM	102	20	20	20	3.5E-07
10:43:40 AM	102	20	20	20	3.5E-07
10:43:41 AM	102	20	20	20	3.6E-07
10:43:42 AM	102	20	20	20	3.7E-07
10:43:43 AM	102	20	20	20	3.9E-07
10:43:44 AM	102	20	20	20	4.1E-07
10:43:45 AM	102	20	20	20	4.4E-07
10:43:46 AM	102	20	20	20	4.7E-07
10:43:47 AM	102	20	20	20	5.0E-07
10:43:48 AM	102	20	20	20	5.2E-07
10:43:49 AM	102	20	20	20	5.4E-07
10:43:50 AM	102	20	20	20	5.4E-07
10:43:51 AM	102	20	20	20	5.3E-07
10:43:52 AM	102	20	20	20	5.1E-07
10:43:53 AM	102	20	20	20	4.8E-07
10:43:54 AM	102	20	20	20	4.5E-07
10:43:55 AM	102	20	20	20	4.3E-07
10:43:56 AM	102	20	20	20	4.2E-07
10:43:57 AM	102	20	20	20	4.1E-07
10:43:58 AM	102	20	20	20	4.0E-07
10:43:59 AM	102	20	20	20	3.9E-07
10:44:00 AM	102	20	20	20	3.8E-07
10:44:01 AM	102	20	20	20	3.8E-07
10:44:02 AM	102	20	20	20	3.8E-07
Averages ->	**102**	**20**	**20**	**20**	**3.9E-07**
			Maximum ->		**5.4E-07**

Yarmouth Research and Technology

Valve Description: 8 inch Class 600 Fluoroseal Plug Valve **Date:** 2/5/2010

Cycle Number: 5000

Time	Pressure (bar)	Bonnet (deg. C)	Body Temp (deg. C)	Body Temp (deg. C)	Leakage (mbar -l/sec)
10:44:34 AM	102	20	20	20	5.7E-07
10:44:35 AM	102	20	20	20	5.8E-07
10:44:36 AM	102	20	20	20	6.1E-07
10:44:37 AM	102	20	20	20	6.2E-07
10:44:38 AM	102	20	20	20	6.5E-07
10:44:39 AM	102	20	20	20	6.9E-07
10:44:40 AM	102	20	20	20	7.2E-07
10:44:41 AM	102	20	20	20	7.2E-07
10:44:42 AM	102	20	20	20	7.0E-07
10:44:43 AM	102	20	20	20	6.7E-07
10:44:44 AM	102	20	20	20	6.2E-07
10:44:45 AM	102	20	20	20	5.9E-07
10:44:46 AM	102	20	20	20	5.7E-07
10:44:47 AM	102	20	20	20	5.8E-07
10:44:48 AM	102	20	20	20	6.0E-07
10:44:49 AM	102	20	20	20	6.3E-07
10:44:50 AM	102	20	20	20	6.6E-07
10:44:51 AM	102	20	20	20	6.9E-07
10:44:52 AM	102	20	20	20	7.2E-07
10:44:53 AM	102	20	20	20	7.4E-07
10:44:54 AM	102	20	20	20	7.5E-07
10:44:55 AM	102	20	20	20	7.6E-07
10:44:56 AM	102	20	20	20	7.5E-07
10:44:57 AM	102	20	20	20	7.2E-07
10:44:58 AM	102	20	20	20	6.9E-07
10:44:59 AM	102	20	20	20	6.5E-07
10:45:00 AM	102	20	20	20	6.2E-07
10:45:01 AM	102	20	20	20	6.1E-07
10:45:02 AM	102	20	20	20	6.0E-07
10:45:03 AM	102	20	20	20	5.9E-07
10:45:04 AM	102	20	20	20	6.0E-07
10:45:05 AM	102	20	20	20	5.9E-07
10:45:06 AM	102	20	20	20	5.9E-07
10:45:07 AM	102	20	20	20	5.9E-07
10:45:08 AM	102	20	20	20	5.8E-07
10:45:09 AM	102	20	20	20	5.7E-07
10:45:10 AM	102	20	20	20	5.5E-07
10:45:11 AM	102	20	20	20	5.3E-07
10:45:12 AM	102	20	20	20	5.2E-07
10:45:13 AM	102	20	20	20	5.1E-07
10:45:14 AM	102	20	20	20	5.0E-07
10:45:15 AM	102	20	20	20	5.0E-07
10:45:16 AM	102	20	20	20	5.0E-07
10:45:17 AM	102	20	20	20	5.1E-07
10:45:18 AM	102	20	20	20	5.2E-07
10:45:19 AM	102	20	20	20	5.2E-07
10:45:20 AM	102	20	20	20	5.3E-07
10:45:21 AM	102	20	20	20	5.3E-07
10:45:22 AM	102	20	20	20	5.2E-07
10:45:23 AM	102	20	20	20	5.0E-07
10:45:24 AM	102	20	20	20	4.9E-07
10:45:25 AM	102	20	20	20	4.7E-07
10:45:26 AM	102	20	20	20	4.5E-07
10:45:27 AM	102	20	20	20	4.2E-07
10:45:28 AM	102	20	20	20	4.1E-07
10:45:29 AM	102	20	20	20	4.0E-07
10:45:30 AM	102	20	20	20	4.0E-07
10:45:31 AM	102	20	20	20	3.9E-07
10:45:32 AM	102	20	20	20	3.8E-07
10:45:33 AM	102	20	20	20	3.8E-07
Averages ->	**102**	**20**	**20**	**20**	**5.8E-07**
			Maximum ->		**7.6E-07**

Yarmouth Research and Technology

Valve Description: 8 inch Class 600 Fluoroseal Plug Valve **Date:** 2/8/2010

Cycle Number: 10000

Time	Pressure (bar)	Bonnet (deg. C)	Body Temp (deg. C)	Body Temp (deg. C)	Leakage (mbar -l/sec)
9:21:47 AM	102	21	21	21	2.1E-06
9:21:48 AM	102	21	21	21	2.1E-06
9:21:49 AM	102	21	21	21	2.2E-06
9:21:50 AM	102	21	20	21	2.3E-06
9:21:51 AM	102	21	21	21	2.4E-06
9:21:52 AM	102	21	21	21	2.4E-06
9:21:53 AM	102	21	21	21	2.4E-06
9:21:54 AM	102	21	21	21	2.3E-06
9:21:55 AM	102	21	21	21	2.2E-06
9:21:56 AM	102	21	21	21	2.1E-06
9:21:57 AM	102	21	21	21	2.0E-06
9:21:58 AM	102	21	20	21	1.9E-06
9:21:59 AM	102	21	21	21	1.8E-06
9:22:00 AM	102	21	21	21	1.7E-06
9:22:01 AM	102	21	21	21	1.6E-06
9:22:02 AM	102	21	21	21	1.5E-06
9:22:03 AM	102	21	21	21	1.3E-06
9:22:04 AM	102	21	21	21	1.2E-06
9:22:05 AM	102	21	21	21	1.2E-06
9:22:06 AM	102	21	21	21	1.1E-06
9:22:07 AM	102	21	21	21	1.1E-06
9:22:08 AM	102	21	21	21	1.1E-06
9:22:09 AM	102	21	21	21	1.2E-06
9:22:10 AM	102	21	21	21	1.2E-06
9:22:11 AM	102	21	21	21	1.3E-06
9:22:12 AM	102	21	21	21	1.5E-06
9:22:13 AM	102	21	21	21	1.6E-06
9:22:14 AM	102	21	21	21	1.7E-06
9:22:15 AM	102	21	21	21	1.8E-06
9:22:16 AM	102	21	21	21	1.9E-06
9:22:17 AM	102	21	20	21	2.0E-06
9:22:18 AM	102	21	21	21	2.1E-06
9:22:19 AM	102	21	21	21	2.1E-06
9:22:20 AM	102	21	21	21	2.0E-06
9:22:21 AM	102	21	21	21	2.0E-06
9:22:22 AM	102	21	21	21	1.8E-06
9:22:23 AM	102	21	21	21	1.7E-06
9:22:24 AM	102	21	21	21	1.5E-06
9:22:25 AM	102	21	21	21	1.4E-06
9:22:26 AM	102	21	20	21	1.3E-06
9:22:27 AM	102	21	21	21	1.3E-06
9:22:28 AM	102	21	21	21	1.4E-06
9:22:29 AM	102	21	21	21	1.5E-06
9:22:30 AM	102	21	21	21	1.6E-06
9:22:31 AM	102	21	21	21	1.7E-06
9:22:32 AM	102	21	21	21	1.8E-06
9:22:33 AM	102	21	21	21	1.8E-06
9:22:34 AM	102	21	21	21	1.8E-06
9:22:35 AM	102	21	21	21	1.9E-06
9:22:36 AM	102	21	21	21	1.9E-06
9:22:37 AM	102	21	21	21	1.9E-06
9:22:38 AM	102	21	21	21	2.0E-06
9:22:39 AM	102	21	21	21	2.0E-06
9:22:40 AM	102	21	21	21	2.0E-06
9:22:41 AM	102	21	21	21	2.0E-06
9:22:42 AM	102	21	21	21	2.0E-06
9:22:43 AM	102	21	21	21	2.0E-06
9:22:44 AM	102	21	21	21	2.0E-06
9:22:45 AM	102	21	21	21	2.1E-06
9:22:46 AM	102	21	20	21	2.1E-06
Averages ->	**102**	**21**	**21**	**21**	**1.8E-06**
			Maximum ->		**2.4E-06**

Yarmouth Research and Technology

Valve Description: 8 inch Class 600 Fluoroseal Plug Valve **Date:** 2/8/2010

Cycle Number: 10000

Time	Pressure (bar)	Bonnet (deg. C)	Body Temp (deg. C)	Body Temp (deg. C)	Leakage (mbar -l/sec)
9:23:11 AM	102	21	21	21	2.5E-06
9:23:12 AM	102	21	21	21	2.5E-06
9:23:13 AM	102	21	21	21	2.5E-06
9:23:14 AM	102	21	21	21	2.5E-06
9:23:15 AM	102	21	21	21	2.5E-06
9:23:16 AM	102	21	20	21	2.5E-06
9:23:17 AM	102	21	21	21	2.5E-06
9:23:18 AM	102	21	21	21	2.5E-06
9:23:19 AM	102	21	21	21	2.4E-06
9:23:20 AM	102	21	21	21	2.3E-06
9:23:21 AM	102	21	21	21	2.3E-06
9:23:22 AM	102	21	21	21	2.3E-06
9:23:23 AM	102	21	21	21	2.3E-06
9:23:24 AM	102	21	21	21	2.3E-06
9:23:25 AM	102	21	21	21	2.3E-06
9:23:26 AM	102	21	21	21	2.3E-06
9:23:27 AM	102	21	21	21	2.3E-06
9:23:28 AM	102	21	21	21	2.4E-06
9:23:29 AM	102	21	21	21	2.4E-06
9:23:30 AM	102	21	21	21	2.4E-06
9:23:31 AM	102	21	21	21	2.4E-06
9:23:32 AM	102	21	21	21	2.4E-06
9:23:33 AM	102	21	21	21	2.4E-06
9:23:34 AM	102	21	21	21	2.4E-06
9:23:35 AM	102	21	21	21	2.3E-06
9:23:36 AM	102	21	21	21	2.3E-06
9:23:37 AM	102	21	20	21	2.4E-06
9:23:38 AM	102	21	21	20	2.3E-06
9:23:39 AM	102	21	21	21	2.3E-06
9:23:40 AM	102	21	21	21	2.3E-06
9:23:41 AM	102	21	21	21	2.3E-06
9:23:42 AM	102	21	21	21	2.3E-06
9:23:43 AM	102	21	21	21	2.3E-06
9:23:44 AM	102	21	20	21	2.3E-06
9:23:45 AM	102	21	21	21	2.3E-06
9:23:46 AM	102	21	21	21	2.3E-06
9:23:47 AM	102	21	21	21	2.3E-06
9:23:48 AM	102	21	21	21	2.3E-06
9:23:49 AM	102	21	21	21	2.2E-06
9:23:50 AM	102	21	21	21	2.2E-06
9:23:51 AM	102	21	21	21	2.2E-06
9:23:52 AM	102	21	21	21	2.2E-06
9:23:53 AM	102	21	21	21	2.2E-06
9:23:54 AM	102	21	21	21	2.1E-06
9:23:55 AM	102	21	21	21	2.0E-06
9:23:56 AM	102	21	21	21	2.0E-06
9:23:57 AM	102	21	21	21	2.0E-06
9:23:58 AM	102	21	21	21	1.9E-06
9:23:59 AM	102	21	21	21	1.8E-06
9:24:00 AM	102	21	21	21	1.8E-06
9:24:01 AM	102	21	21	21	1.8E-06
9:24:02 AM	102	21	21	21	1.8E-06
9:24:03 AM	102	21	21	21	1.9E-06
9:24:04 AM	102	21	21	21	1.9E-06
9:24:05 AM	102	21	21	21	1.9E-06
9:24:06 AM	102	21	21	21	1.9E-06
9:24:07 AM	102	21	21	21	1.9E-06
9:24:08 AM	102	21	21	21	1.9E-06
9:24:09 AM	102	21	21	21	1.8E-06
9:24:10 AM	102	21	21	21	1.8E-06
Averages ->	**102**	**21**	**21**	**21**	**2.2E-06**
			Maximum ->		**2.5E-06**

Yarmouth Research and Technology

Valve Description: 8 inch Class 600 Fluoroseal Plug Valve **Date:** 2/11/2010

Cycle Number: 15000

Time	Pressure (bar)	Bonnet (deg. C)	Body Temp (deg. C)	Body Temp (deg. C)	Leakage (mbar -l/sec)
9:22:22 AM	102	21	21	21	3.7E-06
9:22:23 AM	102	21	21	21	3.7E-06
9:22:24 AM	102	21	21	21	3.7E-06
9:22:25 AM	102	21	21	21	3.7E-06
9:22:26 AM	102	21	21	21	3.7E-06
9:22:27 AM	102	21	21	21	3.6E-06
9:22:28 AM	102	21	21	21	3.6E-06
9:22:29 AM	102	21	21	21	3.5E-06
9:22:30 AM	102	21	21	21	3.4E-06
9:22:31 AM	102	21	21	21	3.4E-06
9:22:32 AM	102	21	21	21	3.3E-06
9:22:33 AM	102	21	21	21	3.2E-06
9:22:34 AM	102	21	21	21	3.2E-06
9:22:35 AM	102	21	21	21	3.1E-06
9:22:36 AM	102	21	21	21	3.1E-06
9:22:37 AM	102	21	21	21	3.0E-06
9:22:38 AM	102	21	21	21	3.0E-06
9:22:39 AM	102	21	21	21	3.0E-06
9:22:40 AM	102	21	21	21	3.0E-06
9:22:41 AM	102	21	21	21	3.0E-06
9:22:42 AM	102	21	21	21	3.1E-06
9:22:43 AM	102	21	21	21	3.0E-06
9:22:44 AM	102	21	21	21	3.0E-06
9:22:45 AM	102	21	21	21	3.0E-06
9:22:46 AM	102	21	21	21	3.1E-06
9:22:47 AM	102	21	21	21	3.1E-06
9:22:48 AM	102	21	21	21	3.2E-06
9:22:49 AM	102	21	21	21	3.2E-06
9:22:50 AM	102	21	21	21	3.2E-06
9:22:51 AM	102	21	21	21	3.2E-06
9:22:52 AM	102	21	21	21	3.2E-06
9:22:53 AM	102	21	21	21	3.2E-06
9:22:54 AM	102	21	21	21	3.2E-06
9:22:55 AM	102	21	21	21	3.3E-06
9:22:56 AM	102	21	21	21	3.3E-06
9:22:57 AM	102	21	21	21	3.4E-06
9:22:58 AM	102	21	21	21	3.5E-06
9:22:59 AM	102	21	21	21	3.5E-06
9:23:00 AM	102	21	21	21	3.5E-06
9:23:01 AM	102	21	21	21	3.5E-06
9:23:02 AM	102	21	21	21	3.5E-06
9:23:03 AM	102	21	21	21	3.5E-06
9:23:04 AM	102	21	21	21	3.5E-06
9:23:05 AM	102	21	21	21	3.5E-06
9:23:06 AM	102	21	21	21	3.5E-06
9:23:07 AM	102	21	21	21	3.6E-06
9:23:08 AM	102	21	21	21	3.6E-06
9:23:09 AM	102	21	21	21	3.6E-06
9:23:10 AM	102	21	21	21	3.5E-06
9:23:11 AM	102	21	21	21	3.5E-06
9:23:12 AM	102	21	21	21	3.5E-06
9:23:13 AM	102	21	21	21	3.4E-06
9:23:14 AM	102	21	21	21	3.4E-06
9:23:15 AM	102	21	21	21	3.4E-06
9:23:16 AM	102	21	21	21	3.4E-06
9:23:17 AM	102	21	21	21	3.5E-06
9:23:18 AM	102	21	21	21	3.5E-06
9:23:19 AM	102	21	21	21	3.6E-06
9:23:20 AM	102	21	21	21	3.5E-06
9:23:21 AM	102	21	21	21	3.6E-06
Averages ->	**102**	**21**	**21**	**21**	**3.4E-06**
			Maximum ->		**3.7E-06**

Yarmouth Research and Technology

Valve Description: 8 inch Class 600 Fluoroseal Plug Valve **Date:** 2/11/2010

Cycle Number: 15000

Time	Pressure (bar)	Bonnet (deg. C)	Body Temp (deg. C)	Body Temp (deg. C)	Leakage (mbar -l/sec)
9:23:56 AM	102	21	21	21	3.7E-06
9:23:57 AM	102	21	21	21	3.7E-06
9:23:58 AM	102	21	21	21	3.8E-06
9:23:59 AM	102	21	21	21	3.9E-06
9:24:00 AM	102	21	21	21	3.9E-06
9:24:01 AM	102	21	21	21	3.9E-06
9:24:02 AM	102	21	21	21	3.9E-06
9:24:03 AM	102	21	21	21	3.9E-06
9:24:04 AM	102	21	21	21	3.9E-06
9:24:05 AM	102	21	21	21	4.0E-06
9:24:06 AM	102	21	21	21	4.0E-06
9:24:07 AM	102	21	21	21	4.1E-06
9:24:08 AM	102	21	21	21	4.2E-06
9:24:09 AM	102	21	21	21	4.2E-06
9:24:10 AM	102	21	21	21	4.2E-06
9:24:11 AM	102	21	21	21	4.2E-06
9:24:12 AM	102	21	21	21	4.2E-06
9:24:13 AM	102	21	21	21	4.2E-06
9:24:14 AM	102	21	21	21	4.3E-06
9:24:15 AM	102	21	21	21	4.3E-06
9:24:16 AM	102	21	21	21	4.4E-06
9:24:17 AM	102	21	21	21	4.5E-06
9:24:18 AM	102	21	21	21	4.6E-06
9:24:19 AM	102	21	21	21	4.7E-06
9:24:20 AM	102	21	21	21	4.8E-06
9:24:21 AM	102	21	21	21	4.8E-06
9:24:22 AM	102	21	21	21	4.8E-06
9:24:23 AM	102	21	21	21	4.8E-06
9:24:24 AM	102	21	21	21	4.8E-06
9:24:25 AM	102	21	21	21	4.8E-06
9:24:26 AM	102	21	21	21	4.7E-06
9:24:27 AM	102	21	21	21	4.7E-06
9:24:28 AM	102	21	21	21	4.7E-06
9:24:29 AM	102	21	21	21	4.6E-06
9:24:30 AM	102	21	21	21	4.6E-06
9:24:31 AM	102	21	21	21	4.6E-06
9:24:32 AM	102	21	21	21	4.6E-06
9:24:33 AM	102	21	21	21	4.6E-06
9:24:34 AM	102	21	21	21	4.5E-06
9:24:35 AM	102	21	21	21	4.5E-06
9:24:36 AM	102	21	21	21	4.5E-06
9:24:37 AM	102	21	21	21	4.4E-06
9:24:38 AM	102	21	21	21	4.4E-06
9:24:39 AM	102	21	21	21	4.3E-06
9:24:40 AM	102	21	21	21	4.2E-06
9:24:41 AM	102	21	21	21	4.0E-06
9:24:42 AM	102	21	21	21	3.9E-06
9:24:43 AM	102	21	21	21	3.8E-06
9:24:44 AM	102	21	21	21	3.7E-06
9:24:45 AM	102	21	21	21	3.7E-06
9:24:46 AM	102	21	21	21	3.6E-06
9:24:47 AM	102	21	21	21	3.4E-06
9:24:48 AM	102	21	21	21	3.4E-06
9:24:49 AM	102	21	21	21	3.4E-06
9:24:50 AM	102	21	21	21	3.4E-06
9:24:51 AM	102	21	21	21	3.4E-06
9:24:52 AM	102	21	21	21	3.5E-06
9:24:53 AM	102	21	21	21	3.6E-06
9:24:54 AM	102	21	21	21	3.6E-06
9:24:55 AM	102	21	21	21	3.6E-06
Averages ->	**102**	**21**	**21**	**21**	**4.2E-06**
			Maximum ->		**4.8E-06**

Yarmouth Research and Technology

Valve Description: 8 inch Class 600 Fluoroseal Plug Valve **Date:** 2/14/2010

Cycle Number: 20000

Time	Pressure (bar)	Bonnet (deg. C)	Body Temp (deg. C)	Body Temp (deg. C)	Leakage (mbar -l/sec)
8:27:34 AM	102	21	21	21	2.8E-06
8:27:35 AM	102	21	21	21	2.9E-06
8:27:36 AM	102	21	21	21	2.8E-06
8:27:37 AM	102	21	21	21	2.9E-06
8:27:38 AM	102	21	21	21	2.8E-06
8:27:39 AM	102	21	21	21	2.8E-06
8:27:40 AM	102	21	21	21	2.9E-06
8:27:41 AM	102	21	21	21	2.9E-06
8:27:42 AM	102	21	21	21	2.9E-06
8:27:43 AM	102	21	21	21	2.9E-06
8:27:44 AM	102	21	21	21	2.9E-06
8:27:45 AM	102	21	21	21	2.9E-06
8:27:46 AM	102	21	21	21	2.9E-06
8:27:47 AM	102	21	21	21	2.9E-06
8:27:48 AM	102	21	21	21	2.9E-06
8:27:49 AM	102	21	21	21	2.9E-06
8:27:50 AM	102	21	21	21	2.9E-06
8:27:51 AM	102	21	21	21	2.9E-06
8:27:52 AM	102	21	21	21	2.9E-06
8:27:53 AM	102	21	21	21	3.0E-06
8:27:54 AM	102	21	21	21	3.0E-06
8:27:55 AM	102	21	21	21	3.0E-06
8:27:56 AM	102	21	21	21	3.0E-06
8:27:57 AM	102	21	21	21	3.0E-06
8:27:58 AM	102	21	21	21	3.0E-06
8:27:59 AM	102	21	21	21	3.0E-06
8:28:00 AM	102	21	21	21	3.0E-06
8:28:01 AM	102	21	21	21	3.1E-06
8:28:02 AM	102	21	21	21	3.0E-06
8:28:03 AM	102	21	21	21	3.0E-06
8:28:04 AM	102	21	21	21	3.0E-06
8:28:05 AM	102	21	21	21	3.0E-06
8:28:06 AM	102	21	21	21	3.1E-06
8:28:07 AM	102	21	21	21	3.0E-06
8:28:08 AM	102	21	21	21	3.1E-06
8:28:09 AM	102	21	21	21	3.1E-06
8:28:10 AM	102	21	21	21	3.1E-06
8:28:11 AM	102	21	21	21	3.1E-06
8:28:12 AM	102	21	21	21	3.1E-06
8:28:13 AM	102	21	21	21	3.1E-06
8:28:14 AM	102	21	21	21	3.1E-06
8:28:15 AM	102	21	21	21	3.1E-06
8:28:16 AM	102	21	21	21	3.1E-06
8:28:17 AM	102	21	21	21	3.1E-06
8:28:18 AM	102	21	21	21	3.1E-06
8:28:19 AM	102	21	21	21	3.1E-06
8:28:20 AM	102	21	21	21	3.1E-06
8:28:21 AM	102	21	21	21	3.1E-06
8:28:22 AM	102	21	21	21	3.1E-06
8:28:23 AM	102	21	21	21	3.1E-06
8:28:24 AM	102	21	21	21	3.1E-06
8:28:25 AM	102	21	21	21	3.1E-06
8:28:26 AM	102	21	21	21	3.1E-06
8:28:27 AM	102	21	21	21	3.1E-06
8:28:28 AM	102	21	21	21	3.1E-06
8:28:29 AM	102	21	21	21	3.1E-06
8:28:30 AM	102	21	21	21	3.1E-06
8:28:31 AM	102	21	21	21	3.1E-06
8:28:32 AM	102	21	21	21	3.1E-06
8:28:33 AM	102	21	21	21	3.1E-06
Averages ->	**102**	**21**	**21**	**21**	**3.0E-06**
			Maximum ->		**3.1E-06**

Yarmouth Research and Technology

Valve Description: 8 inch Class 600 Fluoroseal Plug Valve **Date:** 2/14/2010

Cycle Number: 20000

Time	Pressure (bar)	Bonnet (deg. C)	Body Temp (deg. C)	Body Temp (deg. C)	Leakage (mbar -l/sec)
8:29:31 AM	102	21	21	21	3.4E-06
8:29:32 AM	102	21	21	21	3.4E-06
8:29:33 AM	102	21	21	21	3.4E-06
8:29:34 AM	102	21	21	21	3.4E-06
8:29:35 AM	102	21	21	21	3.4E-06
8:29:36 AM	102	21	21	21	3.4E-06
8:29:37 AM	102	21	21	21	3.3E-06
8:29:38 AM	102	21	21	21	3.3E-06
8:29:39 AM	102	21	21	21	3.3E-06
8:29:40 AM	102	21	21	21	3.3E-06
8:29:41 AM	102	21	21	21	3.3E-06
8:29:42 AM	102	21	21	21	3.4E-06
8:29:43 AM	102	21	21	21	3.3E-06
8:29:44 AM	102	21	21	21	3.4E-06
8:29:45 AM	102	21	21	21	3.4E-06
8:29:46 AM	102	21	21	21	3.4E-06
8:29:47 AM	102	21	21	21	3.4E-06
8:29:48 AM	102	21	21	21	3.4E-06
8:29:49 AM	102	21	21	21	3.4E-06
8:29:50 AM	102	21	21	21	3.4E-06
8:29:51 AM	102	21	21	21	3.4E-06
8:29:52 AM	102	21	21	21	3.4E-06
8:29:53 AM	102	21	21	21	3.4E-06
8:29:54 AM	102	21	21	21	3.4E-06
8:29:55 AM	102	21	21	21	3.4E-06
8:29:56 AM	102	21	21	21	3.3E-06
8:29:57 AM	102	21	21	21	3.3E-06
8:29:58 AM	102	21	21	21	3.4E-06
8:29:59 AM	102	21	21	21	3.4E-06
8:30:00 AM	102	21	20	21	3.4E-06
8:30:01 AM	102	21	21	21	3.4E-06
8:30:02 AM	102	21	21	21	3.4E-06
8:30:03 AM	102	21	21	21	3.4E-06
8:30:04 AM	102	21	21	21	3.4E-06
8:30:05 AM	102	21	21	21	3.4E-06
8:30:06 AM	102	21	21	21	3.4E-06
8:30:07 AM	102	21	21	21	3.4E-06
8:30:08 AM	102	21	21	21	3.4E-06
8:30:09 AM	102	21	21	21	3.4E-06
8:30:10 AM	102	21	21	21	3.4E-06
8:30:11 AM	102	21	21	21	3.4E-06
8:30:12 AM	102	21	21	21	3.4E-06
8:30:13 AM	102	21	21	21	3.4E-06
8:30:14 AM	102	21	21	21	3.4E-06
8:30:15 AM	102	21	20	21	3.4E-06
8:30:16 AM	102	21	21	21	3.3E-06
8:30:17 AM	102	21	21	21	3.4E-06
8:30:18 AM	102	21	21	21	3.3E-06
8:30:19 AM	102	21	21	21	3.3E-06
8:30:20 AM	102	21	21	21	3.3E-06
8:30:21 AM	102	21	21	21	3.4E-06
8:30:22 AM	102	21	20	21	3.4E-06
8:30:23 AM	102	21	21	21	3.3E-06
8:30:24 AM	102	21	21	21	3.3E-06
8:30:25 AM	102	21	21	21	3.3E-06
8:30:26 AM	102	21	21	21	3.3E-06
8:30:27 AM	102	21	21	21	3.3E-06
8:30:28 AM	102	21	21	21	3.4E-06
8:30:29 AM	102	21	21	21	3.3E-06
8:30:30 AM	102	21	21	21	3.4E-06
Averages ->	**102**	**21**	**21**	**21**	**3.4E-06**
			Maximum ->		**3.4E-06**

Yarmouth Research and Technology

Valve Description: 8 inch Class 600 Fluoroseal Plug Valve **Date:** 2/17/2010

Cycle Number: 25000

Time	Pressure (bar)	Bonnet (deg. C)	Body Temp (deg. C)	Body Temp (deg. C)	Leakage (mbar -l/sec)
11:25:59 AM	102	22	22	22	6.2E-06
11:26:00 AM	102	22	22	22	6.2E-06
11:26:01 AM	102	22	22	22	6.1E-06
11:26:02 AM	102	22	22	22	6.1E-06
11:26:03 AM	102	22	22	22	6.1E-06
11:26:04 AM	102	22	22	22	6.1E-06
11:26:05 AM	102	22	22	22	6.1E-06
11:26:06 AM	102	22	22	22	6.1E-06
11:26:07 AM	102	22	22	22	6.1E-06
11:26:08 AM	102	22	22	22	5.9E-06
11:26:09 AM	102	22	22	22	5.9E-06
11:26:10 AM	102	22	22	22	5.8E-06
11:26:11 AM	102	22	22	22	5.8E-06
11:26:12 AM	102	22	22	22	5.9E-06
11:26:13 AM	102	22	22	22	5.8E-06
11:26:14 AM	102	22	22	22	5.8E-06
11:26:15 AM	102	22	21	22	5.8E-06
11:26:16 AM	102	22	22	22	5.8E-06
11:26:17 AM	102	22	22	22	5.8E-06
11:26:18 AM	102	22	22	22	5.9E-06
11:26:19 AM	102	22	22	22	5.8E-06
11:26:20 AM	102	22	22	22	5.8E-06
11:26:21 AM	102	22	22	22	5.9E-06
11:26:22 AM	102	22	21	22	5.8E-06
11:26:23 AM	102	22	22	22	5.8E-06
11:26:24 AM	102	22	22	22	5.9E-06
11:26:25 AM	102	22	22	22	5.8E-06
11:26:26 AM	102	22	22	22	5.8E-06
11:26:27 AM	102	22	22	22	5.9E-06
11:26:28 AM	102	22	22	22	5.8E-06
11:26:29 AM	102	22	22	22	5.9E-06
11:26:30 AM	102	22	22	22	5.8E-06
11:26:31 AM	102	22	22	22	5.9E-06
11:26:32 AM	102	22	22	22	5.8E-06
11:26:33 AM	102	22	22	22	5.9E-06
11:26:34 AM	102	22	22	22	5.6E-06
11:26:35 AM	102	22	22	22	5.6E-06
11:26:36 AM	102	22	22	22	5.6E-06
11:26:37 AM	102	22	21	22	5.6E-06
11:26:38 AM	102	22	22	22	5.7E-06
11:26:39 AM	102	22	22	22	5.9E-06
11:26:40 AM	102	22	22	22	5.8E-06
11:26:41 AM	102	22	21	22	5.9E-06
11:26:42 AM	102	22	22	22	5.8E-06
11:26:43 AM	102	22	21	22	5.7E-06
11:26:44 AM	102	22	22	22	5.8E-06
11:26:45 AM	102	22	21	22	5.8E-06
11:26:46 AM	102	22	22	22	5.9E-06
11:26:47 AM	102	22	21	22	5.8E-06
11:26:48 AM	102	22	22	22	5.8E-06
11:26:49 AM	102	22	22	22	5.8E-06
11:26:50 AM	102	22	22	22	5.7E-06
11:26:51 AM	102	22	22	22	5.9E-06
11:26:52 AM	102	22	21	22	5.8E-06
11:26:53 AM	102	22	22	22	5.8E-06
11:26:54 AM	102	22	22	22	5.8E-06
11:26:55 AM	102	22	22	22	5.7E-06
11:26:56 AM	102	22	22	22	5.7E-06
11:26:57 AM	102	22	22	22	5.7E-06
11:26:58 AM	102	22	22	22	5.6E-06
Averages ->	**102**	**22**	**22**	**22**	**5.8E-06**
			Maximum ->		**6.2E-06**

Yarmouth Research and Technology

Valve Description: 8 inch Class 600 Fluoroseal Plug Valve **Date:** 2/17/2010

Cycle Number: 25000

Time	Pressure (bar)	Bonnet (deg. C)	Body Temp (deg. C)	Body Temp (deg. C)	Leakage (mbar -l/sec)
11:27:26 AM	102	22	22	22	6.1E-06
11:27:27 AM	102	22	22	22	6.3E-06
11:27:28 AM	102	22	21	22	6.1E-06
11:27:29 AM	102	22	22	22	6.1E-06
11:27:30 AM	102	22	22	22	6.2E-06
11:27:31 AM	102	22	22	22	6.0E-06
11:27:32 AM	102	22	22	22	5.9E-06
11:27:33 AM	102	22	22	22	5.7E-06
11:27:34 AM	102	22	21	22	5.8E-06
11:27:35 AM	102	22	22	22	6.2E-06
11:27:36 AM	102	22	22	22	5.7E-06
11:27:37 AM	102	22	22	22	6.3E-06
11:27:38 AM	102	22	22	22	5.6E-06
11:27:39 AM	102	22	22	22	6.1E-06
11:27:40 AM	102	22	22	22	6.5E-06
11:27:41 AM	102	22	22	22	6.0E-06
11:27:42 AM	102	22	22	22	5.7E-06
11:27:43 AM	102	22	21	22	6.3E-06
11:27:44 AM	102	22	22	22	5.9E-06
11:27:45 AM	102	22	22	22	6.1E-06
11:27:46 AM	102	22	22	22	6.3E-06
11:27:47 AM	102	22	22	22	6.1E-06
11:27:48 AM	102	22	22	22	5.7E-06
11:27:49 AM	102	22	21	22	6.1E-06
11:27:50 AM	102	22	22	22	5.9E-06
11:27:51 AM	102	22	22	22	5.8E-06
11:27:52 AM	102	22	22	22	5.6E-06
11:27:53 AM	102	22	22	22	5.7E-06
11:27:54 AM	102	22	22	22	5.5E-06
11:27:55 AM	102	22	22	22	5.4E-06
11:27:56 AM	102	22	22	22	5.7E-06
11:27:57 AM	102	22	22	22	5.6E-06
11:27:58 AM	102	22	22	22	4.9E-06
11:27:59 AM	102	22	21	22	5.6E-06
11:28:00 AM	102	22	22	22	5.4E-06
11:28:01 AM	102	22	22	22	5.4E-06
11:28:02 AM	102	22	22	22	5.5E-06
11:28:03 AM	102	22	22	22	5.2E-06
11:28:04 AM	102	22	22	22	5.1E-06
11:28:05 AM	102	22	22	22	4.9E-06
11:28:06 AM	102	22	22	22	5.1E-06
11:28:07 AM	102	22	22	22	4.8E-06
11:28:08 AM	102	22	21	22	4.8E-06
11:28:09 AM	102	22	22	22	5.2E-06
11:28:10 AM	102	22	22	22	4.8E-06
11:28:11 AM	102	22	22	22	4.9E-06
11:28:12 AM	102	22	22	22	4.6E-06
11:28:13 AM	102	22	22	22	4.8E-06
11:28:14 AM	102	22	22	22	4.4E-06
11:28:15 AM	102	22	22	22	4.9E-06
11:28:16 AM	102	22	22	22	4.7E-06
11:28:17 AM	102	22	22	22	4.8E-06
11:28:18 AM	102	22	22	22	4.7E-06
11:28:19 AM	102	22	22	22	4.6E-06
11:28:20 AM	102	22	22	22	4.9E-06
11:28:21 AM	102	22	22	22	4.5E-06
11:28:22 AM	102	22	22	22	4.9E-06
11:28:23 AM	102	22	22	22	4.9E-06
11:28:24 AM	102	22	22	22	5.0E-06
11:28:25 AM	102	22	22	22	4.6E-06
Averages ->	**102**	**22**	**22**	**22**	**5.5E-06**
			Maximum ->		**6.5E-06**

Yarmouth Research and Technology

Valve Description: 8 inch Class 600 Fluoroseal Plug Valve **Date:** 2/1/2010

Cycle Number: Start of Test - Bonnet Gasket Static Leakage

Time	Pressure (bar)	Bonnet (deg. C)	Body Temp (deg. C)	Body Temp ss 600 Fluoroseal I	Leakage (mbar -l/sec)
			Std., Model 602F, S/N 10/012312S		
8:38:44 AM	102	21	21	21	3.7E-07
8:38:45 AM	102	21	20	21	3.8E-07
8:38:46 AM	102	21	21	21	3.7E-07
8:38:47 AM	102	21	20	21	3.7E-07
8:38:48 AM	102	20	20	21	3.7E-07
8:38:49 AM	102	21	20	22	3.6E-07
8:38:50 AM	102	20	21	21	3.5E-07
8:38:51 AM	102	21	20	21	3.5E-07
8:38:52 AM	102	21	20	21	3.4E-07
8:38:53 AM	102	21	20	21	3.4E-07
8:38:54 AM	102	21	20	21	3.3E-07
8:38:55 AM	102	21	20	21	3.3E-07
8:38:56 AM	102	21	20	21	3.3E-07
8:38:57 AM	102	21	20	21	3.3E-07
8:38:58 AM	102	21	21	21	3.2E-07
8:38:59 AM	102	20	20	21	3.2E-07
8:39:00 AM	102	21	20	21	3.2E-07
8:39:01 AM	102	21	21	21	3.2E-07
8:39:02 AM	102	21	20	21	3.2E-07
8:39:03 AM	102	21	21	21	3.3E-07
8:39:04 AM	102	21	20	21	3.4E-07
8:39:05 AM	102	21	20	21	3.6E-07
8:39:06 AM	102	21	21	21	3.7E-07
8:39:07 AM	102	21	20	21	3.9E-07
8:39:08 AM	102	21	20	21	4.1E-07
8:39:09 AM	102	21	21	21	4.2E-07
8:39:10 AM	102	20	20	21	4.3E-07
8:39:11 AM	102	21	20	21	4.5E-07
8:39:12 AM	102	21	20	21	4.5E-07
8:39:13 AM	102	21	20	21	4.6E-07
8:39:14 AM	102	21	20	21	4.6E-07
8:39:15 AM	102	21	20	21	4.6E-07
8:39:16 AM	102	21	20	21	4.5E-07
8:39:17 AM	102	21	21	21	4.4E-07
8:39:18 AM	102	21	20	21	4.4E-07
8:39:19 AM	102	21	20	21	4.4E-07
8:39:20 AM	102	21	21	21	4.3E-07
8:39:21 AM	102	21	21	21	4.2E-07
8:39:22 AM	102	20	21	21	4.1E-07
8:39:23 AM	102	21	20	21	4.1E-07
8:39:24 AM	102	21	20	21	4.0E-07
8:39:25 AM	102	20	21	21	3.9E-07
8:39:26 AM	102	21	20	21	3.9E-07
8:39:27 AM	102	21	20	21	3.8E-07
8:39:28 AM	102	20	20	21	3.8E-07
8:39:29 AM	102	21	20	22	3.9E-07
8:39:30 AM	102	21	21	21	3.9E-07
8:39:31 AM	102	21	20	21	3.8E-07
8:39:32 AM	102	21	21	22	3.8E-07
8:39:33 AM	102	21	20	21	4.0E-07
8:39:34 AM	102	21	21	21	4.0E-07
8:39:35 AM	102	20	21	21	4.0E-07
8:39:36 AM	102	20	20	21	4.0E-07
8:39:37 AM	102	21	21	21	4.0E-07
8:39:38 AM	102	21	20	21	4.0E-07
8:39:39 AM	102	21	20	21	3.8E-07
8:39:40 AM	102	21	21	21	3.7E-07
8:39:41 AM	102	21	20	21	3.6E-07
8:39:42 AM	102	21	20	21	3.5E-07
8:39:43 AM	102	21	20	22	3.4E-07
Averages ->	**102**	**21**	**20**	**21**	**3.8E-07**
			Maximum ->		**4.6E-07**

2012 ELP COMPLIANCE STATUS REPORT

Consent Decree No. 1:11-cv-13330-TLL-CEB

See Corresponding Tab in the Confidential Folder for Relevant Documentation

2012 ELP COMPLIANCE STATUS REPORT

Consent Decree No. 1:11-cv-13330-TLL-CEB

See Corresponding Tab in the Confidential Folder for Relevant Documentation

Information Requests

Smith, Vanessa (A)

From: Russ Christian [rchristian@columbiapipe.com]
Sent: Wednesday, February 29, 2012 9:42 AM
To: 'Tony Boland'; 'Mark Slayton'; 'Adam Ryan (aryan@coopervalves.com)'; 'Mark Cottrell'; 'wayne.gallupe@metso.com'; 'Janet Green'; 'Sumit Gupta'; 'jstewart@kennedyind.com'; 'brianm@kitz.com'; 'Terry Thurn (tthurn@tycovalves.com)'; 'Terry Thurn (tthurn@tycovalves.com)'; 'BDiStefano@ladishvalves.com'; 'mcoles@newdellco.com'; 'tom.stricklen@c-a-m.com'; 'landerschier@forberg.com'; 'rkim@swivalves.com'; 'jyonkman@lockwoodint.com'; 'clark.kreutzberg@midlandvf.com'; 'stmiller@flowserve.com'; 'sales-hoke@circortech.com'; 'Roger Shemberger (rscontrols@rscontrols.com)'; 'Rick Anderson (randerson@xomox.com)'; 'jhlee@tyvalve.co.kr'; 'larry@fluorosealvalves.com'; 'sales@douglas-chero.com'; 'jason.legendre@f-e-t.com'; 'theo.borgemeester@bacvalves.com'; 'stanley.miller@flowserve.com'; 'schow@newmansvalve.com'; 'tom.stricklen@c-a-m.com'
Cc: DeVine, Dan (DJ)
Subject: LDAR Low Fugitive Emission Questionnaire
Attachments: Low-E Valve Questionnaire.docx

Importance: High

Reminder to all,

If you have already addressed this message please disregard.
If you still owe us information please act immediately and send out by March 2nd, 2012.
If we receive your information by March 2nd you will only <u>be 2 weeks late.</u>

Please respond ASAP

Thank you

Russell Christian

To All,

Dow has requested that each of manufacturers listed on the attached excel spreadsheet fill out and return the following attached questionnaire.
The "Low-E Valve Questionnaire" will act as a record to determine if each manufacturer valves and valve design comply with EPA Method 21 and that the stem leakage is designed to be 100 ppm or less over 5 years of service.

This is all a part of Dow's LDAR program (leak detection and repair). The EPA's Consent Decree went into effect on November 23rd of 2011 for the Michigan Operations site and Dow has a limited time to meet compliance. Please fill the questionnaire to the best of your ability and with as much detail as you can provide.
The attached spreadsheet consist of two tabs that you'll reference to complete the questionnaire. The first tab is sorted by Mfg and includes the Dow CPPS number. The second tab provides a description of the Dow CPPS valve code.

I would appreciate a response that you have received this message; and please provide an estimated time for delivery of the questionnaire.
We would like a completed questionnaire no later than Friday February 17th, 2012.
Feel free to direct any questions to myself or Dan DeVine.

Regards,

Russell Christian
Regional Manager
Sunbelt / Columbia
Midland, Michigan
Ph 989-496-9260 Ext. 2001
Fx 989-496-9261
Cell 989-600-8297

As we discussed, here is the Low Fugitive Emission Questionnaire that I need to have completed. The Consent Decree went into effect on November 23rd for Michigan Operations.

If you could please assist me in collecting data, it would be greatly appreciated. (Dow has six months to get in compliance). If you can send the answers back to me I will compile the information. If we do not get responses we will need to follow up and I need to document it too.

Hopefully this will also help Sunbelt too, in case other oil or chemical companies ask for this information, if they have to deal with a Consent Decree.

There are 33 valve manufacturers, over 100 valve items codes, in the Dow pipe specifications that require this information. See attached spreadsheet. It can sorted in different ways, but I can help with that if needed. Using the first tab (called mfg) and clicking on the drop down arrows or sorting by manufacturer may be the easiest way to build a list of who all needs to be contacted.

I look forward to working with you on this. Please contact me with any questions or let me know if there is an easier wa to do this or how I can help.

Thanks,

Dan DeVine
Piping DAS, Site CPPS Technical Resource,
MIOPs, WVO, ECO, and Business Aligned Sites
Piping Practices Technical Resource Leader
Engineering Solutions
The Dow Chemical Company
1400 Building, Michigan Operations
Midland, MI 48640
phone 989-636-4330
Fax 989-638-3929
email: devinedj@dow.com

— KF Contromatics (WATTS) Response

Holmes, Michael (EHS)

From: DeVine, Dan (DJ)
Sent: Tuesday, April 24, 2012 3:37 PM
To: Smith, Vanessa (A)
Subject: FW: Low Fugitive Emission Questionnaire
Attachments: Low Fugitive Emission Questionnaire.pdf

-----Original Message-----
From: Brayer, Michael [mailto:Michael.Brayer@circor.com]
Sent: Wednesday, March 07, 2012 9:04 AM
To: DeVine, Dan (DJ)
Cc: roger@rscontrols.com
Subject: Low Fugitive Emission Questionnaire

Dan,

Attached is completed low fugitive emissions questionnaire from Contromatics a brand of Circor Energy.

Michael Brayer
Brand Leader - Contromatics
1500 SE 89th Street
Oklahoma City, OK 73149
Phone: 405-644-2530
Cell: 405-820-8960
Email: michael.brayer@circor.com

This email has been scanned by the MessageLabs
outbound Email Security System for CIRCOR International Inc.
For more information please visit http://www.symanteccloud.com

LOW FUGITIVE EMISSION VALVE AND PACKING QUESTIONNAIRE

Two production units at The Dow Chemical Company **Michigan Operations Site** recently came under a Consent Decree from the EPA. One part of this Consent Decree requires installation of Low Fugitive Emission valves and/or Low Fugitive Emission valve stem packing that meets the definition shown below. It also requires supporting documentation.

"Low-Emissions Valve" or "Low-E Valve" shall mean either (i) or (ii) as follows:

(i) A valve (including its specific packing assembly) for which the manufacturer has issued a written warranty that it will not emit fugitives at greater than 100 ppm, and that, if it does so emit at any time in the first five years, the manufacturer will replace the valve; provided however, that no valve shall qualify as "Low-E" by reason of written warranty unless the valve (including its specific packing assembly) either:

(a) first was tested by the manufacturer or a qualified testing firm pursuant to generally-accepted good engineering practices for testing fugitive emissions and the results of the testing reasonably support the warranty; or

(b) is as an Extension of another valve that qualified as "Low-E" per the definition of "Extension" listed below.

Or

(ii) A valve (including its specific packing assembly) that:

a. Has been tested by the manufacturer or a qualified testing firm pursuant to generally-accepted good engineering practices for testing fugitive emissions and that, during the test, at no time leaked at greater than 500 ppm, and on average, leaked at less than 100 ppm; or

b. Is an Extension of another valve that qualified as "Low-E" per the definition of "Extension" listed below.

NOTE: "Extension" shall mean that: (i) the tested and untested valves were produced by the same manufacturer to the same or essentially equivalent quality requirements; (ii) the characteristics of the valve that affect sealing performance (e.g., type of valve, stem motion, tolerances, surface finishes, loading arrangement, and stem and body seal material, design, and construction) are the same or essentially equivalent as between the tested valve and the untested valve; and (iii) the temperature and pressure ratings of the tested valve are at least as high as the temperature and pressure ratings of the untested valve.

Therefore can you please answer **ALL** of the following questions regarding valves that could be supplied to The Dow Chemical Company, Michigan Operations Site?

COMPANY NAME: Circor Energy - Contromatics

1) Will your company provide a written warranty for low emission valves as defined above? YES or NO? No

   If YES, please describe the testing (the nature of the test and the resulting data) that supports the warranty.

   OR

2) Does your company produce valves that have been proven through testing to meet the emission limits in the definition for low emission valves? YES or NO No

If yes to the above questions, what size and type of valves that your company produces will meet this definition or warranty? Please be specific as possible (i.e. which series of valves or models numbers).

Ball? na

Plug? na

Gate? na

Globe? na

Butterfly? na

Other? na

3) Which valves, including sizes, were tested? none

4) Which valves, including sizes, are qualified per an extension? none

5) Will you provide the test data to The Dow Chemical Company for review? If yes, please include it in the response. not applicable

6) Does your Company offer a valve with low emission packing per the following definition?

No

"Low-Emissions Packing" or "Low-E Packing" shall mean either (i) or (ii) as follows:

(i) A valve packing product, independent of any specific valve, for which the manufacturer has issued a written warranty that the packing will not emit fugitives at greater than 100 ppm, and that, if it does so emit at any time in the first five years, the manufacturer will replace the product; provided however, that no packing product shall qualify as "Low-E" by reason of written warranty unless the packing first was tested by the manufacturer or a qualified testing firm pursuant to generally-accepted good engineering practices for testing fugitive emissions and the results of the testing reasonably support the warranty;

Or

(ii) A valve packing product, independent of any specific valve that has been tested by the manufacturer or a qualified testing firm pursuant to generally-accepted good engineering practices for testing fugitive emissions, and that, during the test, at no time leaked at greater than 500 ppm, and on average leaked at less than 100 ppm.

7) If yes, for which valves would "Low-E Packing" be offered? none

8) For which types of packing is "Low-E" status based on a written warranty? none

9) For which types of packing is "Low-E" status based on testing that shows the packing meets the emission limits in the definition above? none

10) If yes, can this Low-E Packing testing information be provided to The Dow Chemical Company for review? If yes, please include it with the response. not applicable.

Thank you for your assistance to help meet low emission compliance.

Please contact Dan DeVine at 989-636-4330, or by email at devinedj@dow.com with questions or clarifications.

— Kitz Response

Holmes, Michael (EHS)

From: Darrell Lueckemeyer [Darrell@kitz.com]
Sent: Thursday, February 16, 2012 3:46 PM
To: DeVine, Dan (DJ)
Subject: Dow Low "E" Questionnaire
Attachments: Dow Low E Valve Questionnaire.docx; LEV - VECS-10-030 LEV.pdf

Dan,

I assume that I need to send the completed questionnaire to you. I have also included information on the KITZ warranty for all Industrial valves. Please feel free to call me if there is any further information that you may require.

Darrell Lueckemeyer
KITZ Corporation of America
Vice President Industrial Division
281-276-6834 (Office Direct)
713-899-6028 (Cell)

LOW FUGITIVE EMISSION VALVE AND PACKING QUESTIONNAIRE

Two production units at The Dow Chemical Company **Michigan Operations Site** recently came under a Consent Decree from the EPA. One part of this Consent Decree requires installation of Low Fugitive Emission valves and/or Low Fugitive Emission valve stem packing that meets the definition shown below. It also requires supporting documentation.

"Low-Emissions Valve" or "Low-E Valve" shall mean either (i) or (ii) as follows:

(i) A valve (including its specific packing assembly) for which the manufacturer has issued a written warranty that it will not emit fugitives at greater than 100 ppm, and that, if it does so emit at any time in the first five years, the manufacturer will replace the valve; provided however, that no valve shall qualify as "Low-E" by reason of written warranty unless the valve (including its specific packing assembly) either:

(a) first was tested by the manufacturer or a qualified testing firm pursuant to generally-accepted good engineering practices for testing fugitive emissions and the results of the testing reasonably support the warranty; or

(b) is as an Extension of another valve that qualified as "Low-E" per the definition of "Extension" listed below.

Or

(ii) A valve (including its specific packing assembly) that:

a. Has been tested by the manufacturer or a qualified testing firm pursuant to generally-accepted good engineering practices for testing fugitive emissions and that, during the test, at no time leaked at greater than 500 ppm, and on average, leaked at less than 100 ppm; or

b. Is an Extension of another valve that qualified as "Low-E" per the definition of "Extension" listed below.

NOTE: "Extension" shall mean that: (i) the tested and untested valves were produced by the same manufacturer to the same or essentially equivalent quality requirements; (ii) the characteristics of the valve that affect sealing performance (e.g., type of valve, stem motion, tolerances, surface finishes, loading arrangement, and stem and body seal material, design, and construction) are the same or essentially equivalent as between the tested valve and the untested valve; and (iii) the temperature and pressure ratings of the tested valve are at least as high as the temperature and pressure ratings of the untested valve.

Therefore can you please answer **ALL** of the following questions regarding valves that could be supplied to The Dow Chemical Company, Michigan Operations Site?

COMPANY NAME: KITZ CORPORATION

Will your company provide a written warranty for low emission valves as defined above?

YES or NO?

If YES, please describe the testing (the nature of the test and the resulting data) that supports the warranty.

OR KITZ has internal as well as third party verification.

1) Does your company produce valves that have been proven through testing to meet the emission limits in the definition for low emission valves? YES or NO

If yes to the above questions, what size and type of valves that your company produces will meet this definition or warranty? Please be specific as possible (i.e. which series of valves or models numbers).

Ball? YES 150/300 Floating Ball Valves "TAZ" (Reduced Port) "TDZ) (Full Port)

Plug? N/A

Gate? YES 150/300/600 Cast Carbon/Low Alloy and Stainless/High Alloy

Globe? YES 150/300/600 Cast Carbon/Low Alloy and Stainless/High Alloy

Butterfly? N/A

Other?

2) Which valves, including sizes, were tested?

All valves, no matter the size or pressure class, have been tested per the KITZ internal standards with Helium.

3) Which valves, including sizes, are qualified per an extension?
All KITZ Industrial Valves are qualified

4) Will you provide the test data to The Dow Chemical Company for review? If yes, please include it in the response.
As mentioned, KITZ has test data, both internal and third party, which has qualified the design of our valves for Low Emission service.

5) Does your Company offer a valve with low emission packing per the following definition?

"Low-Emissions Packing" or "Low-E Packing" shall mean either (i) or (ii) as follows:

(i) A valve packing product, independent of any specific valve, for which the manufacturer has issued a written warranty that the packing will not emit fugitives at greater than 100 ppm, and that, if it does so emit at any time in the first five years, the manufacturer will replace the product; provided however, that no packing product shall qualify as "Low-E" by reason of written warranty unless the packing first was tested by the manufacturer or a qualified testing firm pursuant to generally-accepted good engineering practices for testing fugitive emissions and the results of the testing reasonably support the warranty;

Or

(ii) A valve packing product, independent of any specific valve that has been tested by the manufacturer or a qualified testing firm pursuant to generally-accepted good engineering practices for testing fugitive emissions, and that, during the test, at no time leaked at greater than 500 ppm, and on average leaked at less than 100 ppm.

6) If yes, for which valves would "Low-E Packing" be offered?

KITZ Standard pack is Nippon "Sealever", qualified per API622. This packing is standard on all KITZ industrial valves.

7) For which types of packing is "Low-E" status based on a written warranty?

Please see attachment with warranty information for all KITZ industrial products.

8) For which types of packing is "Low-E" status based on testing that shows the packing meets the emission limits in the definition above?
KITZ only uses Nippon "Sealever" packing in our industrial valves

9) If yes, can this Low-E Packing testing information be provided to The Dow Chemical Company for review? If yes, please include it with the response.
YES

Thank you for your assistance to help meet low emission compliance.

Please contact Dan DeVine at 989-636-4330, or by email at devinedj@dow.com with questions or clarifications.

Valve Engineering Communication Sheet	VECS-10-030

March 19th.2010

Attn; KITZ Corporation America;
Cc; KCJ ISD and QA Dep.

We would like to inform you that all of KITZ industrial valves are controlled to be produced and shipped from our factories with satisfying 50ppm low emission level for the multi-turn valves and 20ppm for PTFE packing and 50ppm for graphite packing for the ball valves as KITZ standard.
The applicable models are as follows;

a) Cast carbon steel and low alloy steel multi-turn valves.
b) A,C and D series stainless steel multi-turn valves.
c) TBZ, TDZ, TA series ball valves.

It is applied to all industrial valves made in our facilities in Japan, China, Taiwan and Spain.

We have been able to achieve this level as standard with enough experiences in production, constantly upgraded production method and strengthened cooperation work with sealing suppliers.

For more details, please consult KITZ engineering or refer to product information.

Sincerely Yours.

Hirofumi Fujihara,
General Manager at R&D

KITZ CORPORATION

-Kitz Response

Holmes, Michael (EHS)

From: DeVine, Dan (DJ)
Sent: Tuesday, May 01, 2012 4:32 PM
To: Darrell Lueckemeyer
Cc: 'Russ Christian'; 'Dayries, Richard [HDS]'; DeVine, Dan (DJ)
Subject: FW: Dow Low "E" Questionnaire-follow up
Attachments: Dow Low E Valve Questionnaire.docx; LEV - VECS-10-030 LEV.pdf

Importance: High

Follow Up Flag: Follow up
Due By: Monday, May 07, 2012 4:00 PM
Flag Status: Flagged

Darrell,

Can you please help me with the following questions regarding low emission valves?

1) Can Kitz provide the test data for all the valves listed as low emission in the questionnaire. It stated it would be provided but I never got any test data.
2) Also, is the warranty offered for 5 years per the definition in the questionnaire? It states yes, if so, can I get an example of the warranty that is offered for 5 years.

Please let me know. If possible, can you please supply this information by May 8th?

Thanks,
Dan DeVine

From: Darrell Lueckemeyer [mailto:Darrell@kitz.com]
Sent: Thursday, February 16, 2012 3:46 PM
To: DeVine, Dan (DJ)
Subject: Dow Low "E" Questionnaire

Dan,

I assume that I need to send the completed questionnaire to you. I have also included information on the KITZ warranty for all Industrial valves. Please feel free to call me if there is any further information that you may require.

Darrell Lueckemeyer
KITZ Corporation of America
Vice President Industrial Division
281-276-6834 (Office Direct)
713-899-6028 (Cell)

2012 ELP COMPLIANCE STATUS REPORT

Consent Decree No. 1:11-cv-13330-TLL-CEB

See Corresponding Tab in the Confidential Folder for Relevant Documentation

Metso / Jamesbury Response

Smith, Vanessa (A)

From: Russ Christian [rchristian@columbiapipe.com]
Sent: Wednesday, January 04, 2012 3:12 PM
To: DeVine, Dan (DJ)
Cc: 'Dayries, Richard [HDS]'; Tammy Whitmer [HDS]
Subject: FW: LDAR Low Fugitive Emission Questionnaire
Attachments: Low-E Valve Questionnaire_Metso_4Jan2012.docx

Dan,

Here is Jamesbury's response

Regards,

Russ

From: wayne.gallupe@jamesbury.com [mailto:wayne.gallupe@jamesbury.com]
Sent: Wednesday, January 04, 2012 3:00 PM
To: Russ Christian
Subject: Re: LDAR Low Fugitive Emission Questionnaire

Hi Russ,

Metso response attached. Unfortunately, Metso low emission testing follows ISO15848 specifications. There is no reliable way to correlate our test results with Method 21 requirements.

Regards,
Wayne

Wayne Gallupe
Global Key Account Manager
Automation Business Line
Metso Automation Inc.
508-852-0200 x6074 (Office)
508-269-5404 (Mobile)
508-393-0978(Fax)

From: Russ Christian <rchristian@columbiapipe.com>

To: 'Tony Boland' <tony.boland@velan.com>, 'Mark Slayton' <mslayton@bonneyforge.com>, "'Adam Ryan (aryan@coopervalves.com)'" <aryan@coopervalves.com>, 'Mark Cottrell' <mcottrell@NewmansValve.com>, "wayne.gallupe@metso.com" <wayne.gallupe@metso.com>, 'Janet Green' <jgreen@newayvalve.com>, 'Sumit Gupta' <sumitg@larsentoubro.com>, "'jstewart@kennedyind.com'" <jstewart@kennedyind.com>, "'brianm@kitz.com'" <brianm@kitz.com>, "Terry Thurn (tthurn@tycovalves.com)" <tthurn@tycovalves.com>, "Terry Thurn (tthurn@tycovalves.com)" <tthurn@tycovalves.com>, "'BDiStefano@ladishvalves.com'" <BDiStefano@ladishvalves.com>, "'mcoles@newdellco.com'" <mcoles@newdellco.com>, "'tom.stricklen@c-a-m.com'" <tom.stricklen@c-a-m.com>, "'landerschier@forberg.com'" <landerschier@forberg.com>, "'rkim@swivalves.com'" <rkim@swivalves.com>, "'jyonkman@lockwoodint.com'" <jyonkman@lockwoodint.com>, "clark.kreutzberg@midlandvf.com" <clark.kreutzberg@midlandvf.com>, "stmiller@flowserve.com" <stmiller@flowserve.com>, "'sales-hoke@circortech.com'" <sales-hoke@circortech.com>, "Roger Shemberger (rscontrols@rscontrols.com)" <rscontrols@rscontrols.com>, "Rick Anderson (randerson@xomox.com)" <randerson@xomox.com>, "'jhlee@tyvalve.co.kr'" <jhlee@tyvalve.co.kr>, "'larry@fluorosealvalves.com'" <larry@fluorosealvalves.com>, "'sales@douglas-chero.com'" <sales@douglas-chero.com>, "'jason.legendre@f-e-t.com'" <jason.legendre@f-e-t.com>, "'theo.borgemeester@bacvalves.com'" <theo.borgemeester@bacvalves.com>

Cc: "'DeVine, Dan (DJ)'" <devinedj@dow.com>, "'Dayries, Richard [HDS]'" <Richard.Dayries@sunbeltsupply.com>, "Tammy Whitmer [HDS]" <tammy.whitmer@sunbeltsupply.com>

Date: 01/04/2012 11:02 AM

Subject: LDAR Low Fugitive Emission Questionnaire

To All,

Dow has requested that each of manufacturers listed on the attached excel spreadsheet fill out and return the following attached questionnaire.
The "Low-E Valve Questionnaire" will act as a record to determine if each manufacturer valves and valve design comply with EPA Method 21 and that the stem leakage is designed to be 100 ppm or less over 5 years of service.

This is all a part of Dow's LDAR program (leak detection and repair). The EPA's Consent Decree went into effect on November 23rd of 2011 for the Michigan Operations site and Dow has a limited time to meet compliance. Please fill the questionnaire to the best of your ability and with as much detail as you can provide.
The attached spreadsheet consist of two tabs that you'll reference to complete the questionnaire. The first tab is sorted by Mfg and includes the Dow CPPS number. The second tab provides a description of the Dow CPPS valve code.

I would appreciate a response that you have received this message; and please provide an estimated time for delivery of the questionnaire.
We would like a completed questionnaire no later than Friday February 17th, 2012.
Feel free to direct any questions to myself or Dan DeVine.

Regards,

Russell Christian
Regional Manager
Sunbelt / Columbia
Midland, Michigan
Ph 989-496-9260 Ext. 2001
Fx 989-496-9261
Cell 989-600-8297

As we discussed, here is the Low Fugitive Emission Questionnaire that I need to have completed. The Consent Decree went into effect on November 23rd for Michigan Operations.

If you could please assist me in collecting data, it would be greatly appreciated. (Dow has six months to get in compliance). If you can

send the answers back to me I will compile the information. If we do not get responses we will need to follow up and I need to document it too.

Hopefully this will also help Sunbelt too, in case other oil or chemical companies ask for this information, if they have to deal with a onsent Decree.

There are 33 valve manufacturers, over 100 valve items codes, in the Dow pipe specifications that require this information. See attached spreadsheet. It can sorted in different ways, but I can help with that if needed. Using the first tab (called mfg) and clicking on the drop down arrows or sorting by manufacturer may be the easiest way to build a list of who all needs to be contacted.

I look forward to working with you on this. Please contact me with any questions or let me know if there is an easier way to do this or how I can help.

Thanks,

Dan DeVine

Piping DAS, Site CPPS Technical Resource,

MIOPs, WVO, ECO, and Business Aligned Sites

Piping Practices Technical Resource Leader

Engineering Solutions
The Dow Chemical Company
1400 Building, Michigan Operations
Midland, MI 48640
phone 989-636-4330
Fax 989-638-3929
email: devinedj@dow.com

[attachment "Low-E Valve Questionnaire.docx" deleted by Wayne Gallupe/WOR/Automation/METSO] [attachment "ELP CPPS valve_final_current_RC 2011-12-09.xls" deleted by Wayne Gallupe/WOR/Automation/METSO]

LOW FUGITIVE EMISSION VALVE AND PACKING QUESTIONNAIRE

Two production units at The Dow Chemical Company **Michigan Operations Site** recently came under a Consent Decree from the EPA. One part of this Consent Decree requires installation of Low Fugitive Emission valves and/or Low Fugitive Emission valve stem packing that meets the definition shown below. It also requires supporting documentation.

"Low-Emissions Valve" or "Low-E Valve" shall mean either (i) or (ii) as follows:

(i) A valve (including its specific packing assembly) for which the manufacturer has issued a written warranty that it will not emit fugitives at greater than 100 ppm, and that, if it does so emit at any time in the first five years, the manufacturer will replace the valve; provided however, that no valve shall qualify as "Low-E" by reason of written warranty unless the valve (including its specific packing assembly) either:

(a) first was tested by the manufacturer or a qualified testing firm pursuant to generally-accepted good engineering practices for testing fugitive emissions and the results of the testing reasonably support the warranty; or

(b) is as an Extension of another valve that qualified as "Low-E" per the definition of "Extension" listed below.

Or

(ii) A valve (including its specific packing assembly) that:

a. Has been tested by the manufacturer or a qualified testing firm pursuant to generally-accepted good engineering practices for testing fugitive emissions and that, during the test, at no time leaked at greater than 500 ppm, and on average, leaked at less than 100 ppm; or

b. Is an Extension of another valve that qualified as "Low-E" per the definition of "Extension" listed below.

NOTE: "Extension" shall mean that: (i) the tested and untested valves were produced by the same manufacturer to the same or essentially equivalent quality requirements; (ii) the characteristics of the valve that affect sealing performance (e.g., type of valve, stem motion, tolerances, surface finishes, loading arrangement, and stem and body seal material, design, and construction) are the same or essentially equivalent as between the tested valve and the untested valve; and (iii) the temperature and pressure ratings of the tested valve are at least as high as the temperature and pressure ratings of the untested valve.

Therefore can you please answer **ALL** of the following questions regarding valves that could be supplied to The Dow Chemical Company, Michigan Operations Site?

COMPANY NAME: **Metso**

1) Will your company provide a written warranty for low emission valves as defined above? YES or NO? **NO**

   If YES, please describe the testing (the nature of the test and the resulting data) that supports the warranty.

   OR

2) Does your company produce valves that have been proven through testing to meet the emission limits in the definition for low emission valves? YES or NO. **NO**

If yes to the above questions, what size and type of valves that your company produces will meet this definition or warranty? Please be specific as possible (i.e. which series of valves or models numbers).

Ball?

Plug?

Gate?

Globe?

Butterfly?

Other?

3) Which valves, including sizes, were tested?

4) Which valves, including sizes, are qualified per an extension?

5) Will you provide the test data to The Dow Chemical Company for review? If yes, please include it in the response.

6) Does your Company offer a valve with low emission packing per the following definition? **NO**

"Low-Emissions Packing" or "Low-E Packing" shall mean either (i) or (ii) as follows:

(i) A valve packing product, independent of any specific valve, for which the manufacturer has issued a written warranty that the packing will not emit fugitives at greater than 100 ppm, and that, if it does so emit at any time in the first five years, the manufacturer will replace the product; provided however, that no packing product shall qualify as "Low-E" by reason of written warranty unless the packing first was tested by the manufacturer or a qualified testing firm pursuant to generally-accepted good engineering practices for testing fugitive emissions and the results of the testing reasonably support the warranty;

Or

(ii) A valve packing product, independent of any specific valve that has been tested by the manufacturer or a qualified testing firm pursuant to generally-accepted good engineering practices for testing fugitive emissions, and that, during the test, at no time leaked at greater than 500 ppm, and on average leaked at less than 100 ppm.

7) If yes, for which valves would "Low-E Packing" be offered?

8) For which types of packing is "Low-E" status based on a written warranty?

9) For which types of packing is "Low-E" status based on testing that shows the packing meets the emission limits in the definition above?

10) If yes, can this Low-E Packing testing information be provided to The Dow Chemical Company for review? If yes, please include it with the response.

Thank you for your assistance to help meet low emission compliance.

Please contact Dan DeVine at 989-636-4330, or by email at devinedj@dow.com with questions or clarifications.

Newmans Response

Smith, Vanessa (A)

From: Russ Christian [rchristian@columbiapipe.com]
Sent: Monday, February 20, 2012 1:31 PM
To: DeVine, Dan (DJ)
Subject: FW: LDAR Low Fugitive Emission Questionnaire
Attachments: ELP CPPS valve_final_current_RC 2011-12-09.xls; Low-E Valve Questionnaire.docx; standard warrant.pdf; Fugitive Emission Report-Newco cast carbon steel.pdf; ISO 15848 FE Test - Newmans 1.5 in Cl800 Gate Valve - Dec 2011.pdf; ISO Fugitive Emission Report - Newmans 2 inch Class 150 Gate Valve.pdf; ISO Fugitive Emission Report - Newmans 4 inch Class 600 Globe Valve.pdf; ISO Fugitive Emission Report - Newmans 6 inch Class 600 Gate Valve.pdf

Sent from my Verizon Wireless Phone

-----Original message-----

From: Shu-Ping Chow <schow@NewmansValve.com>
To: Russ Christian <rchristian@columbiapipe.com>
Cc: Jim Pease <jpease@NewmansValve.com>
Sent: Mon, Feb 20, 2012 15:25:17 GMT+00:00
Subject: FW: LDAR Low Fugitive Emission Questionnaire

Russ,

Please find attached filled questionnaire and fugitive emission reports and contact to us if you have any question.

Best regards,

Shuping Chow
Engineering Manager
Newco Valve LP
13127 Trinity Dr.
Stafford, TX. 77477
1-800-231-3505
Ph: 281-302-4900 Ext. 4886
e-mail: schow@newmansvalve.com

From: Russ Christian [mailto:rchristian@columbiapipe.com]
Sent: Thursday, February 16, 2012 12:56 PM
To: Shu-Ping Chow
Subject: FW: LDAR Low Fugitive Emission Questionnaire

Reminder to all,

If you have already addressed this message please disregard.
If you have not the due date is tomorrow February 17th, 2012.
Please respond ASAP

Thank you

Russell Christian

From: Russ Christian
Sent: Wednesday, January 04, 2012 11:02 AM
To: 'Tony Boland'; 'Mark Slayton'; 'Adam Ryan (aryan@coopervalves.com)'; 'Mark Cottrell'; wayne.gallupe@metso.com; 'Janet Green'; 'Sumit Gupta'; 'jstewart@kennedyind.com'; 'brianm@kitz.com'; Terry Thurn (tthurn@tycovalves.com); Terry Thurn (tthurn@tycovalves.com); 'BDiStefano@ladishvalves.com'; 'mcoles@newdellco.com'; 'tom.stricklen@c-a-m.com'; 'landerschier@forberg.com'; 'rkim@swivalves.com'; 'jyonkman@lockwoodint.com'; clark.kreutzberg@midlandvf.com; stmiller@flowserve.com; 'sales-hoke@circortech.com'; Roger Shemberger (rscontrols@rscontrols.com); Rick Anderson (randerson@xomox.com); 'jhlee@tyvalve.co.kr'; 'larry@fluorosealvalves.com'; 'sales@douglas-chero.com'; 'jason.legendre@f-e-t.com'; 'theo.borgemeester@bacvalves.com'
Cc: 'DeVine, Dan (DJ)'; 'Dayries, Richard [HDS]'; Tammy Whitmer [HDS]
Subject: LDAR Low Fugitive Emission Questionnaire

To All,

Dow has requested that each of manufacturers listed on the attached excel spreadsheet fill out and return the following attached questionnaire.
The "Low-E Valve Questionnaire" will act as a record to determine if each manufacturer valves and valve design comply with EPA Method 21 and that the stem leakage is designed to be 100 ppm or less over 5 years of service.

This is all a part of Dow's LDAR program (leak detection and repair). The EPA's Consent Decree went into effect on November 23rd of 2011 for the Michigan Operations site and Dow has a limited time to meet compliance. Please fill the questionnaire to the best of your ability and with as much detail as you can provide.
The attached spreadsheet consist of two tabs that you'll reference to complete the questionnaire. The first tab is sorted by Mfg and includes the Dow CPPS number. The second tab provides a description of the Dow CPPS valve code.

I would appreciate a response that you have received this message; and please provide an estimated time for delivery of the questionnaire.

We would like a completed questionnaire no later than Friday February 17th, 2012.
Feel free to direct any questions to myself or Dan DeVine.

Regards,

Russell Christian
Regional Manager
Sunbelt / Columbia
Midland, Michigan
Ph 989-496-9260 Ext. 2001
Fx 989-496-9261
Cell 989-600-8297

As we discussed, here is the Low Fugitive Emission Questionnaire that I need to have completed. The Consent Decree went into effect on November 23rd for Michigan Operations.

If you could please assist me in collecting data, it would be greatly appreciated. (Dow has six months to get in compliance). If you can send the answers back to me I will compile the information. If we do not get responses we will need to follow up and I need to document it too.

.opefully this will also help Sunbelt too, in case other oil or chemical companies ask for this information, if they have to deal with a Consent Decree.

There are 33 valve manufacturers, over 100 valve items codes, in the Dow pipe specifications that require this information. See attached spreadsheet. It can sorted in different ways, but I can help with that if needed. Using the first tab (called mfg) and clicking on the drop down arrows or sorting by manufacturer may be the easiest way to build a list of who all needs to be contacted.

I look forward to working with you on this. Please contact me with any questions or let me know if there is an easier way to do this or how I can help.

Thanks,

Dan DeVine
Piping DAS, Site CPPS Technical Resource,
MIOPs, WVO, ECO, and Business Aligned Sites
Piping Practices Technical Resource Leader
Engineering Solutions
The Dow Chemical Company
1400 Building, Michigan Operations
Midland, MI 48640
phone 989-636-4330
Fax 989-638-3929
mail: devinedj@dow.com

LOW FUGITIVE EMISSION VALVE AND PACKING QUESTIONNAIRE

Two production units at The Dow Chemical Company **Michigan Operations Site** recently came under a Consent Decree from the EPA. One part of this Consent Decree requires installation of Low Fugitive Emission valves and/or Low Fugitive Emission valve stem packing that meets the definition shown below. It also requires supporting documentation.

"Low-Emissions Valve" or "Low-E Valve" shall mean either (i) or (ii) as follows:

(i) A valve (including its specific packing assembly) for which the manufacturer has issued a written warranty that it will not emit fugitives at greater than 100 ppm, and that, if it does so emit at any time in the first five years, the manufacturer will replace the valve; provided however, that no valve shall qualify as "Low-E" by reason of written warranty unless the valve (including its specific packing assembly) either:

(a) first was tested by the manufacturer or a qualified testing firm pursuant to generally-accepted good engineering practices for testing fugitive emissions and the results of the testing reasonably support the warranty; or

(b) is as an Extension of another valve that qualified as "Low-E" per the definition of "Extension" listed below.

Or

(ii) A valve (including its specific packing assembly) that:

a. Has been tested by the manufacturer or a qualified testing firm pursuant to generally-accepted good engineering practices for testing fugitive emissions and that, during the test, at no time leaked at greater than 500 ppm, and on average, leaked at less than 100 ppm; or

b. Is an Extension of another valve that qualified as "Low-E" per the definition of "Extension" listed below.

NOTE: "Extension" shall mean that: (i) the tested and untested valves were produced by the same manufacturer to the same or essentially equivalent quality requirements; (ii) the characteristics of the valve that affect sealing performance (e.g., type of valve, stem motion, tolerances, surface finishes, loading arrangement, and stem and body seal material, design, and construction) are the same or essentially equivalent as between the tested valve and the untested valve; and (iii) the temperature and pressure ratings of the tested valve are at least as high as the temperature and pressure ratings of the untested valve.

Therefore can you please answer **ALL** of the following questions regarding valves that could be supplied to The Dow Chemical Company, Michigan Operations Site?

COMPANY NAME: ____Newmans_____

1) Will your company provide a written warranty for low emission valves as defined above? YES or NO?
   We can provide Newmans standard warranty per attachment, but not for five years.
   If YES, please describe the testing (the nature of the test and the resulting data) that supports the warranty.
   Chevron Texaco fugitive emission test – Newco cast carbon steel valves, report is attached.
   ISO 15848-1 – Newco forged steel valves, report is attached.
   ISO 15848-1 –Newco cast stainless steel valves, reports are attached.
   OR

2) Does your company produce valves that have been proven through testing to meet the emission limits in the definition for low emission valves? YES or NO
   Yes

If yes to the above questions, what size and type of valves that your company produces will meet this definition or warranty? Please be specific as possible (i.e. which series of valves or models numbers).

Ball?

Plug?

Gate? Cast carbon steel & stainless steel class 150 & class 300 size 2" to 24"

Forged carbon steel class 150, class 300, & class 800 size ½" to 2"

Globe? Cast carbon steel & stainless steel class 150 & class 300 size 2" to 16"

Forged carbon steel class 150, class 300, & class 800 size ½" to 2"

Butterfly?

Other?

3) Which valves, including sizes, were tested?
   4" class 300 cast carbon steel gate
   1-1/2" class 800 forged steel gate
   2" class 150 cast stainless steel gate
   6" class 600 cast stainless steel gate
   4" class 600 cast stainless steel globe

4) Which valves, including sizes, are qualified per an extension?
Cast carbon steel class 150 & class 300 size 2" to 24" gate and globe
Forged carbon steel class 150, class 300, & class 800 size ½" to 2" gate and globe
Cast stainless steel class 150 & class 300 size 2" to 24" gate and 2" to 16" globe

5) Will you provide the test data to The Dow Chemical Company for review? If yes, please include it in the response.
Yes. Please find the attachments.

6) Does your Company offer a valve with low emission packing per the following definition? Yes.

"Low-Emissions Packing" or "Low-E Packing" shall mean either (i) or (ii) as follows:

(i) A valve packing product, independent of any specific valve, for which the manufacturer has issued a written warranty that the packing will not emit fugitives at greater than 100 ppm, and that, if it does so emit at any time in the first five years, the manufacturer will replace the product; provided however, that no packing product shall qualify as "Low-E" by reason of written warranty unless the packing first was tested by the manufacturer or a qualified testing firm pursuant to generally-accepted good engineering practices for testing fugitive emissions and the results of the testing reasonably support the warranty;

Or

(ii) A valve packing product, independent of any specific valve that has been tested by the manufacturer or a qualified testing firm pursuant to generally-accepted good engineering practices for testing fugitive emissions, and that, during the test, at no time leaked at greater than 500 ppm, and on average leaked at less than 100 ppm.

7) If yes, for which valves would "Low-E Packing" be offered?
Cast carbon steel class 150 & class 300 size 2" to 24" gate and globe
Forged carbon steel class 150, class 300, & class 800 size ½" to 2" gate and globe
Cast stainless steel class 150 & class 300 size 2" to 24" gate and 2" to 16" globe

8) For which types of packing is "Low-E" status based on a written warranty?

9) For which types of packing is "Low-E" status based on testing that shows the packing meets the emission limits in the definition above?
   Pillar 6610 –flexible graphite middle rings
   Pillar 6710- braided graphite w/reinforced inconel wire mesh end rings

10) If yes, can this Low-E Packing testing information be provided to The Dow Chemical Company for review? If yes, please include it with the response.
   Yes.

Thank you for your assistance to help meet low emission compliance.

Please contact Dan DeVine at 989-636-4330, or by email at devinedj@dow.com with questions or clarifications.

TERMS AND CONDITIONS OF SALE

1. CONTRACT ACCEPTANCE:
Any written or oral purchase order received from Buyer by Seller shall be construed as a written acceptance of Seller's offer to sell and shall be filled in accordance with the terms and conditions of sale set forth herein. SELLER'S ACCEPTANCE OF THIS ORDER IS EXPRESSLY CONDITIONED ON BUYER'S ASSENT TO THE TERMS CONTAINED HEREIN. The terms and conditions of Seller's proposal (if any) and acknowledgement shall prevail over conflicting or different terms in Buyer's order unless Buyer notifies Seller in writing of its objections thereto within fifteen (15) days from receipt of Seller's acknowledgement. Buyer's standard terms of purchase will not be considered a counteroffer to Seller's terms and conditions of sale. The failure of Seller to object to any provision in conflict herewith whether contained on Buyer's purchase order or otherwise shall not be construed as a waiver of the provisions hereof nor as an acceptance thereof.

2. QUOTATIONS AND PRICES:
Any product, service capability or manufacturing capability which may be available at the time a quotation is made is subject to prior sale. Prices quoted are subject to change without notice. The price in effect at the time of shipment including any escalation formula will apply, unless a valid quotation or written agreement to the contrary exists between Buyer and Seller. All prices shown are in U.S. dollars and are F.O.B. Seller's shipping point. Seller reserves the right to place a service charge on past due accounts at the highest rate permitted by law. Any documentation pertaining to traceability requirements for raw materials or products or documentation required for any routine or special processes must be identified by the Buyer at the time of quotation (if any) or at the time of order placement.

3. TAXES:
Any tax or other charge imposed by law on the sale or production of goods or the performance of services shall be paid by the Buyer, unless the law specifically provides that such payment must be made by Seller, in which case Buyer shall reimburse Seller for such payment as part of the purchase price. Custom duties, consular fees, insurance charges and other comparable charges will be borne by Buyer.

4. SHIPPING SCHEDULE AND DELIVERY:
Shipment schedules are given as accurately as conditions permit and every effort will be made to make shipments as scheduled. Seller will not be responsible for deviations in meeting shipping schedules nor for any losses or damages to Buyer (or any third party) occasioned by deviations in the shipping schedule, whether due to Acts of God, orders bearing priority ratings established pursuant to law, differences with workmen, local labor shortages, fire, flood, shortages or failure of raw materials, supplies, fuel, power or transportation, breakdown of equipment or any other causes beyond Seller's reasonable control, whether of similar or dissimilar nature than those enumerated. Seller shall have additional time within which to perform as may be reasonably necessary under the circumstances and shall have the right to apportion its production among its customers in such a manner as it may consider to be equitable. Seller reserves the right to furnish commercially equivalent or better substitutes for materials or to subcontract the Buyer's order or portions thereof as Seller deems necessary. In no event shall Seller be liable for any consequential damages resulting from failure or delay in shipment. If Buyer requires drawings, procedures, standards or similar material for approval, shipping schedules will be calculated from the time such approvals are received by Seller, since shipping schedules are based on Seller having all required information and a firm order from Buyer which is enterable into production. Any hold points, witness points or the need for inspection by Buyer's representatives must be identified by Buyer at the time of quotation (if any) and/or order placement in order that the effect on the prices or shipping schedules (if any) can be taken into account. Additional inspection or testing required by Buyer which affects normal production sequence will be considered as extending the shipping dates accordingly.

5. TERMS OF PAYMENT:
Terms of payment are 30 days from date of invoice unless otherwise stated in the quotation or Seller's order acknowledgment.

6. CANCELLATIONS AND RETURNS:
Purchase orders once placed by Buyer and accepted by Seller can be canceled only with Seller's written consent and terms which will save Seller from loss. No products may be returned for credit or adjustment without written ssion from Seller's office authorized to issue such permission.

7. WARRANTIES:
All products of Seller's manufacture except for its Orbit product are warranted against defects of material and workmanship for a period of twelve (12) months from the date of installation or eighteen (18) months from date of shipment, whichever period first expires while its Orbit product is warranted for thirty six (36) months from date of shipment, when all such products are used in the service and within the pressure range for which they were manufactured. In the case of products or parts not wholly of Seller's manufacture, Seller's liability shall be limited to the extent of its recovery from the manufacturer of such products or parts under its liability to Seller. Any repair work performed by Seller is warranted for one year from completion of such repairs and applies only to work performed. If, within these specified periods, Seller receives notice from Buyer of any alleged defect in or nonconformance of any product or repair and if in the Seller's sole judgment the product or repair does not conform or is found to be defective in material or workmanship, then, Buyer shall, at Seller's request, return the part or product F.O.B. to Seller's designated plant or service location. Seller has no liability for removal or reinstallation of products or equipment. Seller, at its option and expense, shall repair or replace the defective part or product, or repay to Buyer the full price paid by Buyer for such defective part, repair or product. Any repayment of purchase price shall be without interest. Seller's warranty liability, including defects caused by Seller's negligence, shall be limited to such repair, replacement or refund, and shall not include claims for labor costs, expenses of Buyer resulting from such defects, recovery under general tort law or strict liability or for damages resulting from delays, loss of use, or other direct, indirect, incidental or consequential damages of any kind. Seller will not be responsible for failures of products which have been in any way tampered with or altered by anyone other than an authorized representative of Seller, failures due to lack of compliance with recommended maintenance procedures or products which have been repaired or altered in such a way (in Seller's judgment) as to affect the products adversely. THIS WARRANTY IS EXPRESSLY IN LIEU OF ALL OTHER WARRANTIES, EXPRESS, STATUTORY OR IMPLIED, INCLUDING THE WARRANTY OF MERCHANTABILITY AND FITNESS FOR PARTICULAR PURPOSE WHICH EXCEED THE FOREGOING WARRANTY.

8.ENGINEERING AND SERVICE:
Upon request, Seller will provide engineering and/or technical information regarding its products and their uses and, if feasible, will provide personnel to assist Buyer in effecting field installations and/or field service. Any such information, service or assistance so provided, whether with or without charge, shall be advisory only

9. LABOR STANDARDS:
Seller hereby certifies that these products were produced in accordance with all applicable requirements of Section 6, 7 and 12 of the Fair Labor Standards Act as amended and of regulations and orders of the United States Department of Labor issued under Section 14 thereof.

10. INSPECTION:
Unless otherwise agreed in writing, final inspection and acceptance of products must be made at Seller's plant or other shipping or receiving point designated by Seller and shall be conclusive except as regards latent defects. Buyer's representatives may inspect at the Seller's plant or shipping point during working hours prior to shipment in such manner as will not interfere with operations.

11. DELIVERY AND ACCEPTANCE:
Delivery shall be in accordance with the requirements in the Purchase Contract, provided, in the event Buyer is unable to accept delivery upon completion of the manufacture of the Goods in accordance with such requirements, Buyer agrees that (i) title and risk of ownership shall pass to Buyer on date of Seller's invoice, and (ii) Buyer will make payments within thirty days after date of such invoice. Seller shall retain custodial risk of loss until delivery is made in accordance with requirements.

XPORT COMPLIANCE:
The Buyer shall provide the Seller with relevant end-use, end-user and country of end-use information with respect to the goods, services, software or technology to be supplied hereunder (collectively, "Items"). Based on and in reliance on such information, the Seller will supply such Items in compliance with applicable trade and customs laws including that of the United States of America. The Seller cautions and the Buyer acknowledges that any change in end-use, end-user or country of end-use (including a shipment between countries other than the U.S.) may be restricted or prohibited by applicable trade and customs law, whether it be of the U.S. or other country. The Parties shall comply with all trade and customs laws (including U.S. Export Controls) except for any such laws which conflict with or are otherwise penalized under the laws of the U.S., which in the event of such conflict, Seller shall notify Buyer. The Buyer agrees in particular that it shall not use and shall not permit any third party to use such items in connection with the design, production, use, or storage of chemical, biological or nuclear weapons or missiles of any kind.

13. TRANSPORTATION CHARGES, ALLOWANCES, CLAIMS:
All prices are F.O.B. Seller's plant or other designated shipping point. No freight is allowed unless stated in Seller's quotation (if any) or in a written contract which may exist between Seller and Buyer at the time of shipment. If Seller's quotation or a written contract states that all or a portion of freight is allowed, all prices are F.O.B. Seller's plant or other designated shipping point, with most economical surface transportation allowed. If the quoted or contractual price includes transportation, Seller reserves the right to designate the common carrier and to ship in the manner it deems most economical. Added costs due to special routing requested by the Buyer are chargeable to the Buyer. Under no circumstances is any freight allowance which is absorbed by Seller to be deducted from the selling price. If the quoted price or contract includes transportation, no deduction will be made in lieu thereof whether Buyer accepts shipment at plant, warehouse, freight station, or otherwise supplies its own transportation. When sales are made from the Seller's warehouse, Seller reserves the right to charge either actual or pro-rated freight from Seller's principle point of manufacture to Seller's warehouse. Buyer assumes risk of loss upon delivery to the carrier, regardless of who pays shipping costs. Seller endeavors to pack or prepare all shipments so that they will not break, rust or deteriorate in transit, but does not guarantee against such damage. Unless requested in writing by the Buyer, no shipments are insured by Seller against damage or loss in transit. Seller will place insurance as nearly as possible in accordance with Buyer's written instructions but in such case Seller acts only as agent between the insurance company and the Buyer and assumes no liability whatsoever. Any claims for shipping loss, breakage or damage (obvious or concealed) are Buyer's responsibility and should be made to the carrier. All claims regarding shortages must be made within thirty (30) days from receipt of shipment and must be accompanied by the packing list(s) covering the shipment.

14. INDEMNIFICATION AND LIMITATION OF LIABILITY:

A. INDEMNIFICATION:
"Buyer Group" means: Buyer, its parent (if any), subsidiaries, affiliates, co-owners, co-venturers, partners and any entity with whom Buyer has an economic interest with respect to the Work including Buyer's customer and its and their respective employees, personnel, directors, officers, borrowed servants, representatives, agents, contractors and subcontractors (respectively and of any tier or level and who are not included within the Seller Group),
"Seller Group" means: Seller, its parent (if any), subsidiaries, affiliates, co-owners and its and their respective employees, personnel, directors, officers, borrowed servants, representatives, agents, contractors and subcontractors (respectively and of any tier or level and who are not included within the Buyer Group),
"Negligence" means: sole, joint or concurrent, active, passive, gross or willful misconduct.

(1) Seller shall release, defend, save, indemnify (collectively "Indemnify") and hold Buyer Group harmless from and against all claims, demands, losses, damages and causes of action of whatever kind or nature (collectively "Claims"), for loss of or damage to the property of the members of the Seller Group even if such Claims arise from or attributable to the Negligence of the members of Buyer Group.

(2) Seller shall Indemnify and hold Buyer Group harmless from and against all Claims for the death(s) of or personal injury(ies) to members of the Seller Group even if such Claims arise from or attributable to the Negligence of the members of Buyer Group.

(3) Buyer shall Indemnify and hold Seller Group harmless from and against all Claims for loss of or damage to the property (including the Work) of the members of the Buyer Group even if such Claims arise from or attributable to the Negligence of the members of Seller Group.

(4) Buyer shall Indemnify and hold Seller Group harmless from and against all Claims for the death(s) of or personal injury(ies) to members of the Buyer Group even if such Claims arise from or attributable to the Negligence of the members of Seller Group.

(5) Buyer (on its own behalf and on behalf of Buyer Group) and Seller (on its own behalf and on behalf of Seller Group) shall Indemnify and hold each other harmless from and against any and all Claims asserted against them by or on behalf of any third party for the death(s) of or personal injury (ies) to such a third party, as well as loss (es) of or damage(s) to the property of such a third party. A third party is a person or entity not included in Buyer Group or Seller Group. It is agreed by Buyer and Seller that their respective duty of indemnity to each other with respect to Claims asserted against them by a third party pursuant to this Article 14 (A) (5) shall be limited to their respective degree of Negligence.

(6) Notwithstanding any other provision contained in this Agreement, Buyer shall Indemnify and hold the members of Seller Group harmless from and against all Claims (including clean-up costs and loss (es) of oil, gas or hydrocarbons) arising from pollution, contamination, dumping or spilling of any substance and even if arising out of or attributable to the Negligence of the members of the Seller Group.

B. INDEMNITY FOR CONSEQUENTIAL DAMAGES:
UNDER NO CIRCUMSTANCES SHALL SELLER BE LIABLE FOR ANY SPECIAL, CONSEQUENTIAL, INCIDENTAL, EXEMPLARY OR PUNITIVE DAMAGES (collectively "CONSEQUENTIAL"), AS DEFINED BY THE LAWS GOVERNING THIS PURCHASE ORDER, NOR FOR ANY LOSS OF ANTICIPATED PROFITS, LOSS OF BUSINESS OPPORTUNITY, LOSS OF USE OF EQUIPMENT OR OF ANY INSTALLATION, SYSTEM OR FACILITY INTO WHICH SELLER'S EQUIPMENT MAY BE LOCATED OR AT WHICH MEMBERS OF THE SELLER GROUP MAY BE PERFORMING WORK AND BUYER AGREES TO "INDEMNIFY" AND HOLD SELLER GROUP HARMLESS FROM AND AGAINST ANY "CLAIMS" FOR SUCH "CONSEQUENTIAL" DAMAGES EVEN IF ARISING OUT OF OR ATTRIBUTABLE TO THE "NEGLIGENCE" OF THE MEMBERS OF THE SELLER GROUP.

C. LIMITATION OF LIABILITY:
EXCEPT AS OTHERWISE EXPRESSLY LIMITED IN THIS AGREEMENT IT IS THE EXPRESS INTENTION OF THE PARTIES HERETO THAT ALL INDEMNITY OBLIGATIONS AND/OR LIABILITIES HEREBY ASSUMED BY THE PARTIES SHALL BE: (i) SUPPORTED BY INSURANCE; (ii) WITHOUT LIMIT; (iii) AND WITHOUT REGARD TO THE CAUSE OR CAUSES THEREOF, INCLUDING, BUT NOT LIMITED TO, PREEXISTING CONDITIONS (WHETHER SUCH CONDITIONS BE PATENT OR LATENT); THE UNSEAWORTHINESS OF ANY VESSEL OR VESSELS (WHETHER OR NOT PREEXISTING); THE UNAIRWORTHINESS OF ANY AIRCRAFT; BREACH OF REPRESENTATION OR WARRANTY (EXPRESS OR IMPLIED); BREACH OF CONTRACT; BREACH OF DUTY (STATUTORY, CONTRACTUAL, COMMON LAW OR OTHERWISE); STRICT LIABILITY; CONDITION OF RUIN OR DEFECTIVE PREMISES, EQUIPMENT, FACILITIES, OR APPURTENANCES OF ANY PARTY UNDER ANY CODE, LAW OR (WHETHER OR NOT SAID CONDITION IS PREEXISTING AND/OR LATENT, PATENT OR OTHERWISE); THE LOADING OR UNLOADING OF PERSONS OR CARGO; TORT; OR THE NEGLIGENCE OR FAULT OF ANY PARTY (AS DEFINED AT THE BEGINNING OF THIS ARTICLE 14; OR ANY OTHER THEORY OF LEGAL LIABILITY. Seller's total responsibility for any claims, damages, losses or liability arising out of or related to its performance of this contract or the products or services covered hereunder shall not exceed the purchase price.

15. MODIFICATION, RESCISSION & WAIVER:
The terms herein may not be modified or rescinded nor any of its provisions waived unless such modification, rescission or waiver is in writing and signed by an authorized employee of Seller at its office in Houston, Texas. Failure of Seller to insist in any one or more instances upon the performance of any of the terms and conditions of the contract or the failure of Seller to exercise any of its rights hereunder shall not be construed as a waiver or relinquishment of any such term, condition, or right hereunder and shall not affect Seller's right to insist upon strict performance and compliance with regard to any unexecuted portions of this contract or future performance of these terms and conditions.

All orders must be accepted by an authorized employee of Seller. The rights and duties of the parties and construction and effect of all provisions hereof shall be governed by and construed according to the internal laws of the State of Texas. Any disputes which arise under this agreement shall be venued in the District Court of Harris County, Texas or in the Southern District of Texas.

ISO 15848-1
Helium Fugitive Emission Test Report

Performed for

Newmans

www.newmansvalves.com

1 1/2" Class 800 Newco 51 Gate Valve

Project Number: 211112
Test Date: Dec. 9, 2011

Performed by

YARMOUTH RESEARCH AND TECHNOLOGY, LLC

434 Walnut Hill Road
North Yarmouth, ME 04097 USA
(207) 829-5359
info@yarmouthresearch.com
www.yarmouthresearch.com

Yarmouth Research and Technology, LLC

Fugitive Emission Test Data Sheet

Customer: Cameron/Newmans **Date:** 12/9/2011
Project #: 211149
Product Description: 1-1/2" Class 800 A105 steel gate valve API 602
NEWCO 51
Packing Description: Flexible Graphite - Standard
Sample Supplied by: Customer
Stem Diameter: 16.0 mm
Packing Nut Torque: 25 Ft/Lb

Test Conditions

Test Standard: ISO 15848-1: First Edition 2006 **Test Stand:** Yarmouth Stand 1
Tightness Class: BH **Allowable:** 2.82E-05 atm cc/sec
Test Media: 99% Helium
Endurance Class: CO1
Temperature Class: 200C
Pressure Class: Class 800 **Rating:** 1975 psig@amb 1690 psig@temp
Testing Method: Purge for stem seals, sniffing (enclosed area) for bonnet seal
Mounting Position: Stem and Bore Horizontal
Max. Allowable Bonnet Gasket Leakage: 50 PPMv by sniffing method
Leakage Device: Pfeiffer SmartTest HLT560
Cycling Rate: 1 cycle per 15 seconds

Test Data Summary - Stem Seal

		Stem Seal Leakage Readings - atm cc/sec				*Packing*	*Opening*	*Closing*
Cycle	*Nom.Temp*	*Static*		*Dynamic*		*Retorque*	*Torque*	*Torque*
Number	*(C)*	*Avg.*	*Max.*	*Avg.*	*Max.*	*See Notes*	*(ft-lb)*	*(ft-lb)*
0	20	5.4E-06	5.9E-06	6.2E-06	7.2E-06		50	40
125	20	3.1E-06	3.2E-06	3.9E-06	4.3E-06		50	40
125	200	2.6E-06	2.7E-06	1.8E-06	2.6E-06		50	40
250	200	1.0E-06	1.1E-06	1.1E-06	1.2E-06		50	40
250	20	1.5E-05	1.5E-05	1.7E-05	2.6E-05	**1**	60	50
375	20	1.3E-05	1.3E-05	1.6E-05	1.8E-05		55	50
375	200	4.2E-06	4.5E-06	4.4E-06	4.7E-06		55	50
500	200	3.8E-06	5.0E-06	3.9E-06	4.4E-06		55	50
500	20	2.3E-06	2.4E-06	1.3E-05	4.8E-05			
Maximum Leakage:		**1.5E-05**	**1.5E-05**	**1.7E-05**	**4.8E-05**		**60**	**50**
Maximum Allowable:		**2.82E-05**	**2.82E-05**					

Yarmouth Research and Technology, LLC

Test Data Summary - Bonnet Seal

Cycle Number	*Nom.Temp (C)*	*Leakage - PPMv*	
		Avg.	*Max.*
0	20	1.4	1.7
500	20	2.4	2.4
Maximum Leakage:		**2.4**	**2.4**
Maximum Allowable:		**50**	**50**

Packing Retorque Notes:

Adjustment Number	*Cycle Number*	*Nom.Temp (C)*	*Static Leakage Readings before Tightening*		*Before Adjustment Nut Torque (in-lb)*	*After Adjustment Nut Torque (in-lb)*
			Avg.	*Max.*		
1	250	20	3.9E-05	3.9E-05	10	70
2						
3						
	Maximum Allowable:		**2.82E-05**	**2.82E-05**		

Results

Valve passed the C01 level with 1 packing adjustment.

Witnessed:

President, Yarmouth Research

STATE OF MAINE
MATTHEW J WASIELEWSKI
No. 7437
LICENSED
PROFESSIONAL ENGINEER

Yarmouth Research and Technology, LLC

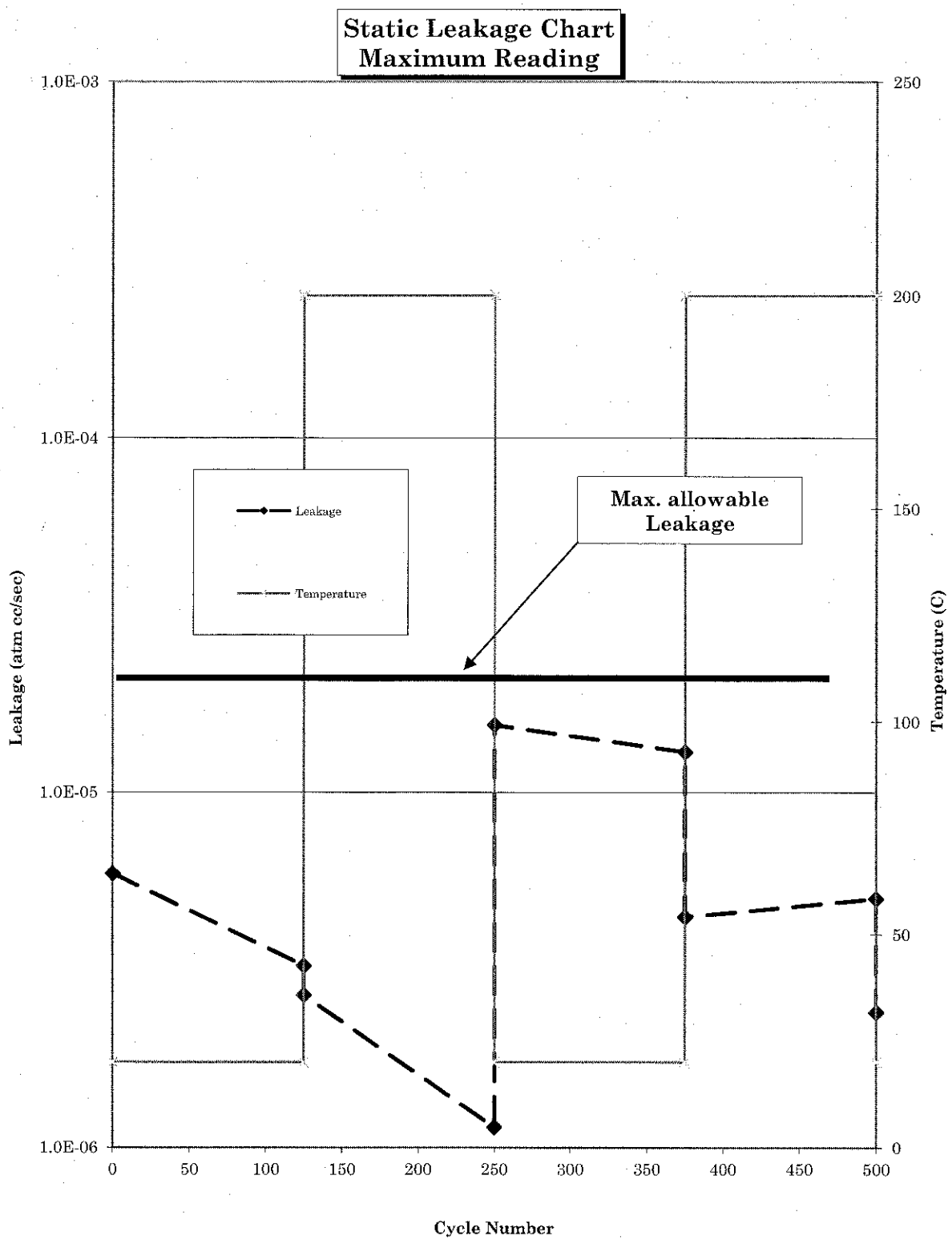

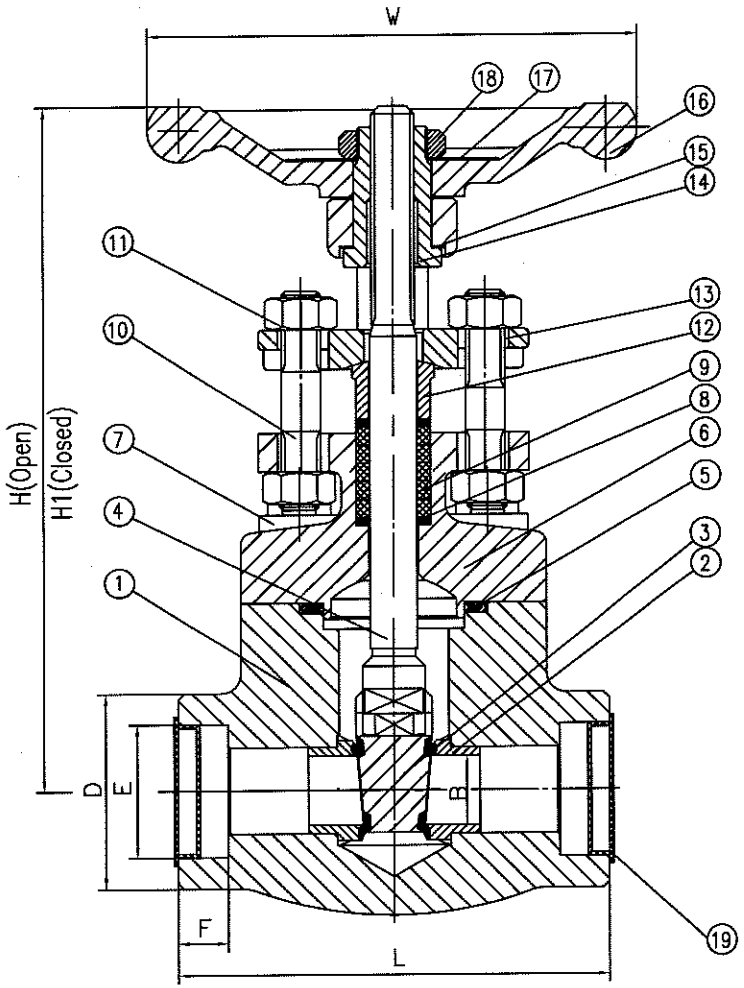

ITEM	NAME	ASTM SPEC	NOTE
1	BODY	ASTM A105N	
2	SEAT RING	ASTM A276 Type 410	STELLITE 6#
3	DISC	ASTM A276 Type 420	
4	STEM	ASTM A182 F6a Class 2	
5	GASKET	SPW.316SS+GRAPHITE	7
6	BONNET	ASTM A105N	
7	BONNET BOLTS	ASTM A193 GR.B7	
8	END PACKING	BRAIDED GRAPHITE	7
9	MIDDLE PACKING	DIE FORMED GRAPHITE	7
10	GLAND STUDS	ASTM A193 GR.B6	
11	GLAND STUD NUTS	ASTM A194 GR.6	
12	GLAND	ASTM A276 Type 410	
13	GLAND FLANGE	ASTM A105N	
14	STEM NUT	ASTM A276 Type 410+NITRIDING	
15	BEARING	ASTM A276 Type 410	
16	HANDWHEEL	ASTM A536 TYPE 60-40-18	
17	NAMEPLATE	ASTM A182 304SS	
18	HANDWHEEL NUT	CARBON STEEL	
19	CAP	PLASTIC	RED

NOTES:
1.BASIC DESIGN -API602 & ASME B16.34;
2.WALL THICKNESS -API602 & ASME B16.34
3.SOCKET-WELDED DIMENSIONS -ANSI B16.11;
4.END TO END DIMENSIONS - MANUFACTURER STANDARD
5.PRESSURE TEMPERATURE RATING - ASME B16.34;
6.PRESSURE TESTS - API 598;
7.RECOMMENDED SPARE PARTS;

DIMENSION unit: inch

SIZE	L	B	E	F	D	H1	H	W
1/2	3.11	0.41	0.85	0.38	1.42	5.79	6.30	3.94
3/4	3.62	0.53	1.07	0.50	1.57	5.87	6.46	3.94
1	4.37	0.71	1.33	0.50	1.97	6.93	7.80	4.92
1-1/2	4.72	1.14	1.92	0.50	2.56	8.46	9.65	6.30
2	5.51	1.42	2.41	0.63	3.07	9.69	11.34	7.09

REV.	DSCRIPTION	BY	APPVD	DATE

MATERIAL

TOLERANCES UNLESS OTHERWISE NOTED

.XX ± .015 .XXX ± .005 FRACT. ± 1/64 ANGLE ±1/2 FIN. 125

DRAWN KELLY	DATE 11/22/2011	NEWCO/OIC VALVES NEWCO VALVES, LLC/NEWMAN'S VALVE	
REVIEWED JANE	DATE 11/22/2011		
VERIFIED PING	DATE 12/12/2011	NPS 1/2 - 2 CLASS 800 FORGED STEEL GATE VALVES NEWCO FIGURE NUMBER: 18S-FS2-RP	
VALIDATED SPC	DATE 12/12/2011		
APPROVED JP	DATE 12/12/2011		
PRODUCT CODE 51		SCALE - / SIZE / DWG NO N4981-000	REV. 0

PHOTOGRAPHS

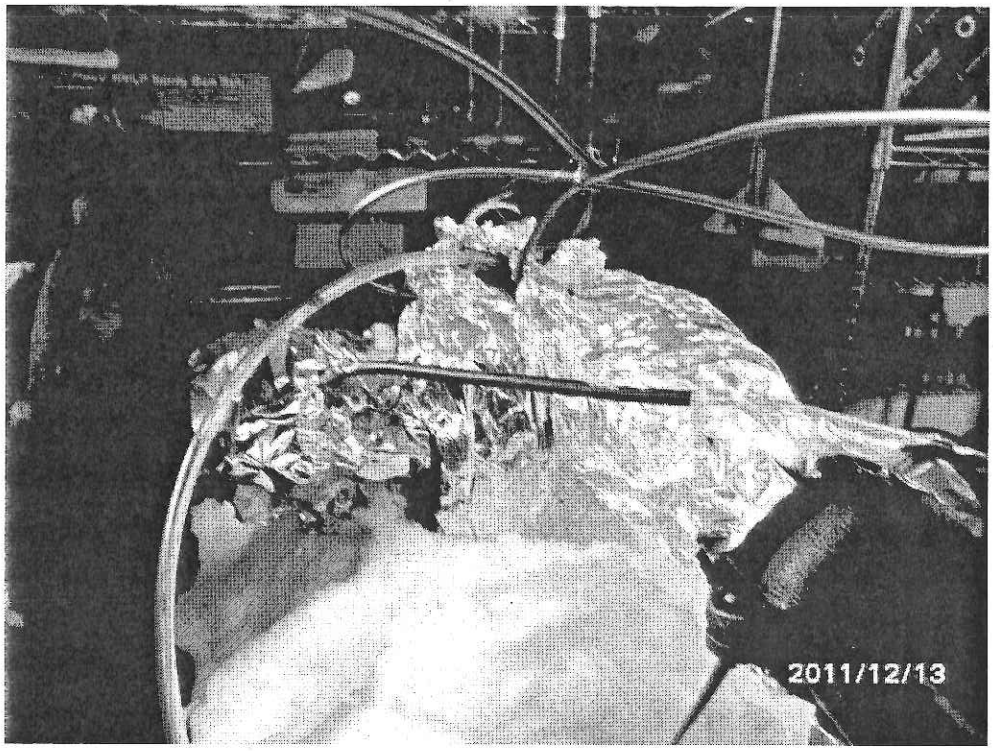

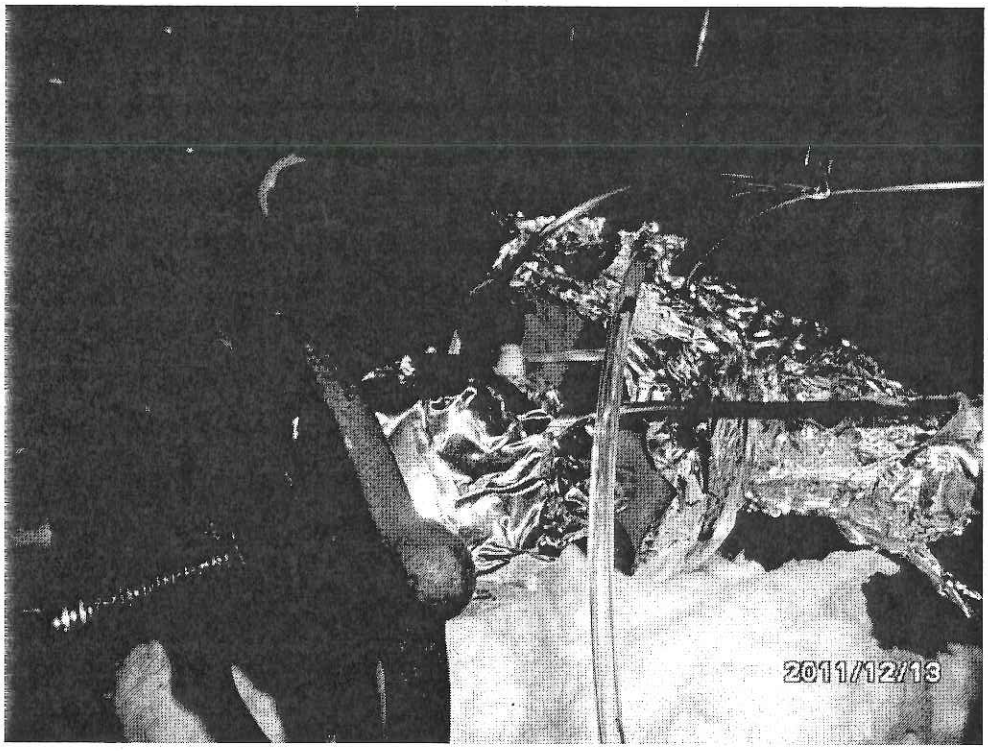

Valve Setup

Yarmouth Research and Technology, LLC

Valve Description: 1 1/2 inch Class 800 Newmans Gate Valve **Date:** 12/9/2011

Cycle Number: 0

Time	Pressure (psig)	Bonnet (deg. C)	Body Temp (deg. C)	Inside Temp (deg. C)	Leakage (Atm cc/sec)
10:59:56 AM	1975	22	22	22	5.8E-06
10:59:57 AM	1975	22	22	22	5.8E-06
10:59:58 AM	1975	22	22	22	5.8E-06
10:59:59 AM	1975	22	22	22	5.9E-06
11:00:00 AM	1975	22	22	22	5.9E-06
11:00:01 AM	1975	22	22	22	5.8E-06
11:00:02 AM	1975	22	22	22	5.8E-06
11:00:03 AM	1975	22	22	22	5.8E-06
11:00:04 AM	1975	22	22	22	5.8E-06
11:00:05 AM	1975	22	22	22	5.8E-06
11:00:06 AM	1975	22	22	22	5.8E-06
11:00:07 AM	1975	22	22	22	5.8E-06
11:00:08 AM	1975	22	22	22	5.8E-06
11:00:09 AM	1975	22	22	22	5.8E-06
11:00:10 AM	1975	22	22	22	5.8E-06
11:00:11 AM	1975	22	22	22	5.8E-06
11:00:12 AM	1975	22	22	22	5.8E-06
11:00:13 AM	1975	22	22	22	5.8E-06
11:00:14 AM	1975	22	22	22	5.8E-06
11:00:15 AM	1975	22	22	22	5.7E-06
11:00:16 AM	1975	22	22	22	5.7E-06
11:00:17 AM	1975	22	22	22	5.5E-06
11:00:18 AM	1975	22	22	22	5.5E-06
11:00:19 AM	1975	22	22	22	5.5E-06
11:00:20 AM	1975	22	22	22	5.5E-06
11:00:21 AM	1975	22	22	22	5.5E-06
11:00:22 AM	1975	22	22	22	5.4E-06
11:00:22 AM	1975	22	22	22	5.4E-06
11:00:23 AM	1975	22	22	22	5.4E-06
11:00:24 AM	1975	22	22	22	5.4E-06
11:00:25 AM	1975	22	22	22	5.4E-06
11:00:26 AM	1975	22	22	22	5.4E-06
11:00:27 AM	1975	22	22	22	5.3E-06
11:00:28 AM	1975	22	22	22	5.3E-06
11:00:29 AM	1975	22	22	22	5.3E-06
11:00:30 AM	1975	22	22	22	5.3E-06
11:00:31 AM	1975	22	22	22	5.3E-06
11:00:32 AM	1975	22	22	22	5.2E-06
11:00:33 AM	1975	22	22	22	5.2E-06
11:00:34 AM	1975	22	22	22	5.2E-06
11:00:35 AM	1975	22	22	22	5.2E-06
11:00:36 AM	1975	22	22	22	5.2E-06
11:00:37 AM	1975	22	22	22	5.2E-06
11:00:38 AM	1975	22	22	22	5.2E-06
11:00:39 AM	1975	22	22	22	5.2E-06
11:00:40 AM	1975	22	22	22	5.2E-06
11:00:41 AM	1975	22	22	22	5.1E-06
11:00:42 AM	1975	22	22	22	5.1E-06
11:00:43 AM	1975	22	22	22	5.1E-06
11:00:44 AM	1975	22	22	22	5.0E-06
11:00:45 AM	1975	22	22	22	5.0E-06
11:00:46 AM	1975	22	22	22	4.9E-06
11:00:47 AM	1975	22	22	22	4.9E-06
11:00:48 AM	1975	22	22	22	4.8E-06
11:00:49 AM	1975	22	22	22	4.8E-06
11:00:50 AM	1975	22	22	22	4.7E-06
11:00:51 AM	1975	22	22	22	4.7E-06
11:00:52 AM	1975	22	22	22	4.7E-06
11:00:53 AM	1975	22	22	22	4.7E-06
11:00:54 AM	1975	22	22	22	4.7E-06
Averages ->	**1975**	**22**	**22**	**22**	**5.4E-06**
				Maximum ->	**5.9E-06**

Yarmouth Research and Technology, LLC

Valve Description: 1 1/2 inch Class 800 Newmans Gate Valve **Date:** 12/9/2011

Cycle Number: 0

Time	Pressure (psig)	Bonnet (deg. C)	Body Temp (deg. C)	Inside Temp (deg. C)	Leakage (Atm cc/sec)
11:27:49 AM	1975	22	21	22	6.4E-06
11:27:50 AM	1975	22	21	21	6.4E-06
11:27:51 AM	1975	22	22	22	6.5E-06
11:27:52 AM	1975	22	21	21	6.4E-06
11:27:53 AM	1975	22	22	22	6.4E-06
11:27:54 AM	1975	21	22	22	6.2E-06
11:27:55 AM	1975	22	22	21	6.2E-06
11:27:56 AM	1975	22	21	21	6.2E-06
11:27:57 AM	1975	72	72	72	6.2E-06
11:27:58 AM	1975	72	72	72	6.1E-06
11:27:59 AM	1975	22	21	22	6.0E-06
11:28:00 AM	1975	22	21	22	5.9E-06
11:28:01 AM	1975	21	21	22	5.9E-06
11:28:02 AM	1975	22	22	21	5.9E-06
11:28:03 AM	1975	72	72	97	5.9E-06
11:28:04 AM	1975	22	21	22	5.9E-06
11:28:05 AM	1975	21	21	22	5.9E-06
11:28:06 AM	1975	22	21	22	6.0E-06
11:28:07 AM	1975	22	22	21	6.0E-06
11:28:08 AM	1975	21	22	22	6.0E-06
11:28:09 AM	1975	21	22	21	6.0E-06
11:28:10 AM	1975	21	22	21	6.0E-06
11:28:11 AM	1975	21	21	22	6.1E-06
11:28:12 AM	1975	21	22	22	6.1E-06
11:28:13 AM	1975	22	22	22	6.1E-06
11:28:14 AM	1975	22	21	21	6.2E-06
11:28:15 AM	1975	22	22	21	6.3E-06
11:28:16 AM	1975	21	22	21	6.3E-06
11:28:17 AM	1975	22	22	21	6.3E-06
11:28:18 AM	1975	21	22	22	6.9E-06
11:28:19 AM	1975	21	21	22	7.2E-06
11:28:20 AM	1975	22	22	21	7.0E-06
11:28:21 AM	1975	22	22	22	6.9E-06
11:28:22 AM	1975	21	21	22	6.8E-06
11:28:23 AM	1975	22	21	22	6.8E-06
11:28:24 AM	1975	22	22	21	6.8E-06
11:28:25 AM	1975	22	22	22	6.5E-06
11:28:26 AM	1975	22	22	21	6.4E-06
11:28:27 AM	1975	22	22	22	6.5E-06
11:28:28 AM	1975	22	22	22	6.3E-06
11:28:29 AM	1975	22	21	22	6.3E-06
11:28:30 AM	1975	22	22	22	6.3E-06
11:28:31 AM	1975	22	22	22	6.2E-06
11:28:32 AM	1975	22	22	22	6.1E-06
11:28:33 AM	1975	22	21	22	6.1E-06
11:28:34 AM	1975	22	22	22	6.1E-06
11:28:35 AM	1975	22	22	22	6.0E-06
11:28:36 AM	1975	22	22	22	6.0E-06
11:28:37 AM	1975	22	21	22	6.0E-06
11:28:38 AM	1975	22	22	21	6.0E-06
11:28:39 AM	1975	22	22	22	6.0E-06
11:28:40 AM	1975	22	22	21	6.0E-06
11:28:40 AM	1975	22	22	22	5.9E-06
11:28:41 AM	1975	22	22	22	5.9E-06
11:28:42 AM	1975	21	22	22	5.9E-06
11:28:43 AM	1975	22	22	22	5.9E-06
11:28:44 AM	1975	22	22	22	5.9E-06
11:28:45 AM	1975	21	22	22	5.9E-06
11:28:46 AM	1975	22	21	22	5.9E-06
11:28:47 AM	1975	22	22	22	6.0E-06
Averages ->	**1975**	**24**	**24**	**25**	**6.2E-06**
				Maximum ->	**7.2E-06**

Yarmouth Research and Technology, LLC

Valve Description: 1 1/2 inch Class 800 Newmans Gate Valve **Date:** 12/9/2011

Cycle Number: 125

Time	Pressure (psig)	Bonnet (deg. C)	Body Temp (deg. C)	Inside Temp (deg. C)	Leakage (Atm cc/sec)
2:08:23 PM	1975	23	23	23	3.2E-06
2:08:24 PM	1975	23	23	23	3.2E-06
2:08:25 PM	1975	23	23	23	3.2E-06
2:08:26 PM	1975	23	23	23	3.2E-06
2:08:27 PM	1975	23	23	23	3.2E-06
2:08:28 PM	1975	23	23	23	3.2E-06
2:08:29 PM	1975	23	23	23	3.2E-06
2:08:30 PM	1975	23	23	23	3.2E-06
2:08:31 PM	1975	23	23	23	3.2E-06
2:08:32 PM	1975	23	23	23	3.2E-06
2:08:33 PM	1975	23	23	23	3.2E-06
2:08:34 PM	1975	23	23	23	3.2E-06
2:08:35 PM	1975	23	23	23	3.2E-06
2:08:36 PM	1975	23	23	23	3.2E-06
2:08:37 PM	1975	23	23	23	3.2E-06
2:08:38 PM	1975	23	23	23	3.2E-06
2:08:39 PM	1975	23	23	23	3.1E-06
2:08:40 PM	1975	23	23	23	3.1E-06
2:08:41 PM	1975	23	23	23	3.1E-06
2:08:42 PM	1975	23	23	23	3.1E-06
2:08:43 PM	1975	23	23	23	3.1E-06
2:08:44 PM	1975	23	23	23	3.2E-06
2:08:45 PM	1975	23	23	23	3.1E-06
2:08:46 PM	1975	23	23	23	3.1E-06
2:08:47 PM	1975	23	23	23	3.1E-06
2:08:48 PM	1975	23	23	23	3.1E-06
2:08:49 PM	1975	23	23	23	3.1E-06
2:08:50 PM	1975	23	23	23	3.1E-06
2:08:51 PM	1975	23	23	23	3.1E-06
2:08:52 PM	1975	23	23	23	3.1E-06
2:08:53 PM	1975	23	23	23	3.1E-06
2:08:54 PM	1975	23	23	23	3.1E-06
2:08:55 PM	1975	23	23	23	3.1E-06
2:08:56 PM	1975	23	23	23	3.1E-06
2:08:57 PM	1975	23	23	23	3.1E-06
2:08:58 PM	1975	23	23	23	3.1E-06
2:08:59 PM	1975	23	23	23	3.1E-06
2:09:00 PM	1975	23	23	23	3.1E-06
2:09:01 PM	1975	23	23	23	3.1E-06
2:09:02 PM	1975	23	23	23	3.1E-06
2:09:03 PM	1975	23	23	23	3.1E-06
2:09:04 PM	1975	23	23	23	3.1E-06
2:09:05 PM	1975	23	23	23	3.1E-06
2:09:06 PM	1975	23	22	23	3.1E-06
2:09:07 PM	1975	22	23	23	3.1E-06
2:09:08 PM	1975	23	23	23	3.1E-06
2:09:09 PM	1975	23	23	23	3.1E-06
2:09:09 PM	1975	23	23	23	3.1E-06
2:09:10 PM	1975	23	23	23	3.1E-06
2:09:11 PM	1975	23	23	23	3.1E-06
2:09:12 PM	1975	23	23	23	3.1E-06
2:09:13 PM	1975	23	23	23	3.1E-06
2:09:14 PM	1975	23	22	23	3.1E-06
2:09:15 PM	1975	22	23	23	3.1E-06
2:09:16 PM	1975	23	23	23	3.1E-06
2:09:17 PM	1975	23	23	23	3.1E-06
2:09:18 PM	1975	23	23	23	3.1E-06
2:09:19 PM	1975	23	23	23	3.1E-06
2:09:20 PM	1975	23	23	23	3.1E-06
2:09:21 PM	1975	23	23	23	3.1E-06
Averages ->	**1975**	**23**	**23**	**23**	**3.1E-06**
				Maximum ->	**3.2E-06**

Yarmouth Research and Technology, LLC

Valve Description: 1 1/2 inch Class 800 Newmans Gate Valve **Date:** 12/9/2011

Cycle Number: 125

Time	Pressure (psig)	Bonnet (deg. C)	Body Temp (deg. C)	Inside Temp (deg. C)	Leakage (Atm cc/sec)
2:10:29 PM	1975	23	23	23	3.6E-06
2:10:30 PM	1975	23	23	23	3.6E-06
2:10:31 PM	1975	23	23	23	3.7E-06
2:10:32 PM	1975	23	23	23	3.6E-06
2:10:33 PM	1975	23	23	23	3.6E-06
2:10:34 PM	1975	23	23	23	3.6E-06
2:10:35 PM	1975	23	23	23	3.6E-06
2:10:36 PM	1975	23	23	23	3.7E-06
2:10:37 PM	1975	23	23	23	3.7E-06
2:10:38 PM	1975	23	23	23	3.7E-06
2:10:39 PM	1975	23	23	23	3.6E-06
2:10:40 PM	1975	23	23	23	3.7E-06
2:10:41 PM	1975	23	23	23	3.7E-06
2:10:42 PM	1975	23	23	23	3.6E-06
2:10:43 PM	1975	23	23	23	3.6E-06
2:10:44 PM	1975	23	23	23	3.6E-06
2:10:45 PM	1975	23	23	23	3.6E-06
2:10:46 PM	1975	23	23	23	3.6E-06
2:10:47 PM	1975	23	23	23	3.6E-06
2:10:48 PM	1975	23	23	23	3.6E-06
2:10:49 PM	1975	23	23	23	3.5E-06
2:10:50 PM	1975	23	23	23	3.5E-06
2:10:51 PM	1975	23	23	23	3.5E-06
2:10:52 PM	1975	23	23	23	3.5E-06
2:10:53 PM	1975	23	23	23	3.5E-06
2:10:54 PM	1975	23	23	23	3.6E-06
2:10:55 PM	1975	23	23	23	3.6E-06
2:10:56 PM	1975	23	23	23	3.7E-06
2:10:57 PM	1975	23	23	23	3.7E-06
2:10:58 PM	1975	23	23	23	3.8E-06
2:10:59 PM	1975	23	23	23	3.9E-06
2:11:00 PM	1975	23	23	23	4.0E-06
2:11:01 PM	1975	23	23	23	4.1E-06
2:11:02 PM	1975	23	23	23	4.1E-06
2:11:03 PM	1975	23	23	23	4.2E-06
2:11:04 PM	1975	23	23	23	4.2E-06
2:11:05 PM	1975	23	23	23	4.3E-06
2:11:06 PM	1975	23	23	23	4.3E-06
2:11:07 PM	1975	23	23	23	4.3E-06
2:11:08 PM	1975	23	23	23	4.3E-06
2:11:09 PM	1975	23	23	23	4.3E-06
2:11:10 PM	1975	23	23	23	4.3E-06
2:11:11 PM	1975	23	23	23	4.3E-06
2:11:12 PM	1975	23	23	23	4.3E-06
2:11:13 PM	1975	23	23	23	4.2E-06
2:11:14 PM	1975	23	23	23	4.2E-06
2:11:15 PM	1975	23	23	23	4.2E-06
2:11:16 PM	1975	23	23	23	4.2E-06
2:11:17 PM	1975	23	23	23	4.2E-06
2:11:18 PM	1975	23	23	23	4.1E-06
2:11:19 PM	1975	23	23	23	4.1E-06
2:11:20 PM	1975	23	23	23	4.1E-06
2:11:21 PM	1975	23	23	23	4.0E-06
2:11:22 PM	1975	23	23	23	4.0E-06
2:11:23 PM	1975	23	23	23	4.0E-06
2:11:24 PM	1975	23	22	23	4.0E-06
2:11:25 PM	1975	23	23	23	3.9E-06
2:11:26 PM	1975	23	23	23	3.9E-06
2:11:27 PM	1975	23	23	23	3.8E-06
2:11:28 PM	1975	23	23	23	3.8E-06
Averages ->	**1975**	**23**	**23**	**23**	**3.9E-06**
				Maximum ->	**4.3E-06**

Yarmouth Research and Technology, LLC

Valve Description: 1 1/2 inch Class 800 Newmans Gate Valve **Date:** 12/9/2011

Cycle Number: 125

Time	Pressure (psig)	Bonnet (deg. C)	Body Temp (deg. C)	Inside Temp (deg. C)	Leakage (Atm cc/sec)
3:22:51 PM	1690	197	195	200	2.4E-06
3:22:52 PM	1690	197	196	200	2.4E-06
3:22:53 PM	1690	197	195	200	2.4E-06
3:22:54 PM	1690	197	195	199	2.4E-06
3:22:55 PM	1690	197	195	200	2.5E-06
3:22:56 PM	1690	197	195	200	2.5E-06
3:22:57 PM	1690	197	195	200	2.5E-06
3:22:58 PM	1690	197	195	200	2.5E-06
3:22:59 PM	1690	197	195	200	2.5E-06
3:23:00 PM	1690	197	195	200	2.5E-06
3:23:01 PM	1690	197	196	200	2.5E-06
3:23:02 PM	1690	197	196	200	2.5E-06
3:23:03 PM	1690	197	195	200	2.5E-06
3:23:03 PM	1690	197	195	200	2.5E-06
3:23:04 PM	1690	197	196	200	2.5E-06
3:23:05 PM	1690	197	196	200	2.5E-06
3:23:06 PM	1690	197	196	200	2.5E-06
3:23:07 PM	1690	197	196	200	2.5E-06
3:23:08 PM	1690	198	195	200	2.5E-06
3:23:09 PM	1690	197	196	200	2.5E-06
3:23:10 PM	1690	197	196	200	2.5E-06
3:23:11 PM	1690	197	195	200	2.5E-06
3:23:12 PM	1690	197	196	200	2.5E-06
3:23:13 PM	1690	197	196	200	2.5E-06
3:23:14 PM	1690	197	196	200	2.5E-06
3:23:15 PM	1690	197	195	200	2.5E-06
3:23:16 PM	1690	197	195	200	2.6E-06
3:23:17 PM	1690	197	196	200	2.5E-06
3:23:18 PM	1690	197	195	200	2.5E-06
3:23:19 PM	1690	197	196	200	2.5E-06
3:23:20 PM	1690	197	195	200	2.6E-06
3:23:21 PM	1690	197	196	200	2.5E-06
3:23:22 PM	1690	197	195	200	2.5E-06
3:23:23 PM	1690	197	196	200	2.5E-06
3:23:24 PM	1690	197	195	200	2.6E-06
3:23:25 PM	1690	197	196	200	2.6E-06
3:23:26 PM	1690	197	196	200	2.6E-06
3:23:27 PM	1690	197	196	200	2.6E-06
3:23:28 PM	1690	197	196	199	2.6E-06
3:23:29 PM	1690	197	196	200	2.6E-06
3:23:30 PM	1690	197	196	200	2.6E-06
3:23:31 PM	1690	197	195	200	2.6E-06
3:23:32 PM	1690	197	196	199	2.6E-06
3:23:33 PM	1690	197	196	200	2.6E-06
3:23:34 PM	1690	197	195	199	2.6E-06
3:23:35 PM	1690	197	195	199	2.6E-06
3:23:36 PM	1690	197	195	199	2.6E-06
3:23:37 PM	1690	197	195	200	2.6E-06
3:23:38 PM	1690	197	195	199	2.6E-06
3:23:39 PM	1690	197	195	199	2.6E-06
3:23:40 PM	1690	196	195	199	2.7E-06
3:23:41 PM	1690	197	195	199	2.6E-06
3:23:42 PM	1690	197	195	200	2.7E-06
3:23:43 PM	1690	197	195	199	2.7E-06
3:23:44 PM	1690	197	195	200	2.7E-06
3:23:45 PM	1690	196	195	199	2.6E-06
3:23:46 PM	1690	196	195	200	2.7E-06
3:23:47 PM	1690	197	195	199	2.7E-06
3:23:48 PM	1690	197	196	199	2.7E-06
3:23:49 PM	1690	196	196	200	2.6E-06
Averages ->	**1690**	**197**	**195**	**200**	**2.6E-06**
				Maximum ->	**2.7E-06**

Yarmouth Research and Technology, LLC

Valve Description: 1 1/2 inch Class 800 Newmans Gate Valve **Date:** 12/9/2011

Cycle Number: 125

Time	Pressure (psig)	Bonnet (deg. C)	Body Temp (deg. C)	Inside Temp (deg. C)	Leakage (Atm cc/sec)
3:24:28 PM	1690	197	196	200	1.6E-06
3:24:29 PM	1690	197	196	200	1.6E-06
3:24:30 PM	1690	197	196	200	1.7E-06
3:24:31 PM	1690	197	196	200	1.8E-06
3:24:32 PM	1690	197	195	200	1.8E-06
3:24:33 PM	1690	197	196	200	1.9E-06
3:24:34 PM	1690	197	195	200	1.9E-06
3:24:35 PM	1690	197	196	200	1.9E-06
3:24:36 PM	1690	197	196	200	2.0E-06
3:24:37 PM	1690	197	196	200	2.1E-06
3:24:38 PM	1690	197	196	200	2.1E-06
3:24:39 PM	1690	197	196	200	2.1E-06
3:24:40 PM	1690	197	196	200	2.2E-06
3:24:41 PM	1690	197	196	200	2.2E-06
3:24:42 PM	1690	197	195	200	2.2E-06
3:24:43 PM	1690	197	196	200	2.2E-06
3:24:44 PM	1690	197	195	199	2.2E-06
3:24:45 PM	1690	197	196	200	2.1E-06
3:24:46 PM	1690	197	196	200	2.1E-06
3:24:47 PM	1690	197	196	199	2.1E-06
3:24:48 PM	1690	197	196	199	2.0E-06
3:24:49 PM	1690	197	196	199	2.0E-06
3:24:50 PM	1690	197	195	199	1.9E-06
3:24:51 PM	1690	197	195	199	1.9E-06
3:24:52 PM	1690	197	196	199	1.8E-06
3:24:53 PM	1690	197	196	199	1.8E-06
3:24:54 PM	1690	197	195	199	1.7E-06
3:24:55 PM	1690	197	196	200	1.7E-06
3:24:56 PM	1690	197	196	200	1.7E-06
3:24:57 PM	1690	197	195	199	1.6E-06
3:24:58 PM	1690	197	195	199	1.6E-06
3:24:59 PM	1690	196	196	199	1.5E-06
3:25:00 PM	1690	197	196	199	1.5E-06
3:25:01 PM	1690	197	195	200	1.5E-06
3:25:02 PM	1690	197	195	199	1.5E-06
3:25:03 PM	1690	197	195	199	1.4E-06
3:25:04 PM	1690	196	196	199	1.4E-06
3:25:05 PM	1690	196	196	199	1.5E-06
3:25:06 PM	1690	196	195	199	1.5E-06
3:25:07 PM	1690	197	196	199	1.5E-06
3:25:08 PM	1690	197	195	200	1.5E-06
3:25:09 PM	1690	196	196	200	1.5E-06
3:25:10 PM	1690	197	196	200	1.6E-06
3:25:11 PM	1690	197	195	200	1.6E-06
3:25:12 PM	1690	197	196	199	1.6E-06
3:25:13 PM	1690	197	195	200	1.6E-06
3:25:14 PM	1690	197	196	200	1.6E-06
3:25:15 PM	1690	197	195	200	1.6E-06
3:25:16 PM	1690	197	196	200	1.6E-06
3:25:17 PM	1690	197	196	200	1.6E-06
3:25:18 PM	1690	197	196	200	1.6E-06
3:25:19 PM	1690	197	196	200	1.7E-06
3:25:20 PM	1690	197	195	200	1.7E-06
3:25:21 PM	1690	197	196	200	1.8E-06
3:25:22 PM	1690	197	195	200	1.9E-06
3:25:23 PM	1690	197	196	200	2.0E-06
3:25:24 PM	1690	196	196	200	2.2E-06
3:25:25 PM	1690	197	196	200	2.4E-06
3:25:26 PM	1690	197	196	200	2.4E-06
3:25:27 PM	1690	197	196	200	2.6E-06
Averages ->	**1690**	**197**	**196**	**200**	**1.8E-06**
				Maximum ->	**2.6E-06**

Yarmouth Research and Technology, LLC

Valve Description: 1 1/2 inch Class 800 Newmans Gate Valve **Date:** 12/9/2011

Cycle Number: 250

Time	Pressure (psig)	Bonnet (deg. C)	Body Temp (deg. C)	Inside Temp (deg. C)	Leakage (Atm cc/sec)
4:33:26 PM	1690	197	197	200	8.4E-07
4:33:27 PM	1690	198	196	200	8.5E-07
4:33:28 PM	1690	198	196	200	8.2E-07
4:33:29 PM	1690	198	196	200	8.4E-07
4:33:30 PM	1690	198	196	200	8.5E-07
4:33:30 PM	1690	198	196	200	8.8E-07
4:33:31 PM	1690	198	196	200	9.1E-07
4:33:32 PM	1690	197	197	200	9.0E-07
4:33:33 PM	1690	197	196	200	8.8E-07
4:33:34 PM	1690	198	196	200	9.1E-07
4:33:35 PM	1690	198	196	200	9.3E-07
4:33:36 PM	1690	197	196	199	9.2E-07
4:33:37 PM	1690	197	196	199	9.4E-07
4:33:38 PM	1690	197	196	199	9.2E-07
4:33:39 PM	1690	197	196	200	9.2E-07
4:33:40 PM	1690	198	196	200	9.3E-07
4:33:41 PM	1690	197	196	200	9.0E-07
4:33:42 PM	1690	198	196	200	9.4E-07
4:33:43 PM	1690	197	196	200	9.3E-07
4:33:44 PM	1690	197	196	200	9.3E-07
4:33:45 PM	1690	197	196	200	9.5E-07
4:33:46 PM	1690	198	196	200	9.5E-07
4:33:47 PM	1690	197	196	200	9.7E-07
4:33:48 PM	1690	197	196	200	9.9E-07
4:33:49 PM	1690	197	196	200	1.0E-06
4:33:50 PM	1690	197	196	199	1.0E-06
4:33:51 PM	1690	197	196	199	9.9E-07
4:33:52 PM	1690	197	196	199	1.0E-06
4:33:53 PM	1690	197	196	199	9.7E-07
4:33:54 PM	1690	197	196	200	9.9E-07
4:33:55 PM	1690	197	196	199	1.0E-06
4:33:56 PM	1690	197	196	199	1.0E-06
4:33:57 PM	1690	197	196	200	1.0E-06
4:33:58 PM	1690	198	196	200	1.0E-06
4:33:59 PM	1690	197	196	200	1.0E-06
4:34:00 PM	1690	197	196	200	1.0E-06
4:34:01 PM	1690	197	196	199	1.0E-06
4:34:02 PM	1690	197	196	200	1.0E-06
4:34:03 PM	1690	198	195	200	1.0E-06
4:34:04 PM	1690	197	196	199	1.0E-06
4:34:05 PM	1690	197	196	200	1.0E-06
4:34:06 PM	1690	197	196	200	1.0E-06
4:34:07 PM	1690	198	196	200	1.0E-06
4:34:08 PM	1690	197	196	200	1.0E-06
4:34:09 PM	1690	198	196	200	1.1E-06
4:34:10 PM	1690	198	196	200	1.1E-06
4:34:11 PM	1690	198	196	200	1.1E-06
4:34:12 PM	1690	197	196	200	1.1E-06
4:34:13 PM	1690	198	196	200	1.1E-06
4:34:14 PM	1690	198	197	200	1.1E-06
4:34:15 PM	1690	198	196	200	1.1E-06
4:34:16 PM	1690	198	196	200	1.1E-06
4:34:17 PM	1690	198	196	200	1.1E-06
4:34:18 PM	1690	198	197	200	1.1E-06
4:34:19 PM	1690	197	196	200	1.1E-06
4:34:20 PM	1690	198	196	200	1.1E-06
4:34:21 PM	1690	198	197	201	1.1E-06
4:34:22 PM	1690	198	197	201	1.1E-06
4:34:23 PM	1690	198	197	200	1.1E-06
4:34:24 PM	1690	198	197	200	1.1E-06
Averages ->	**1690**	**198**	**196**	**200**	**1.0E-06**
				Maximum ->	**1.1E-06**

Yarmouth Research and Technology, LLC

Valve Description: 1 1/2 inch Class 800 Newmans Gate Valve **Date:** 12/9/2011

Cycle Number: 250

Time	Pressure (psig)	Bonnet (deg. C)	Body Temp (deg. C)	Inside Temp (deg. C)	Leakage (Atm cc/sec)
4:35:04 PM	1690	197	196	199	1.0E-06
4:35:05 PM	1690	197	196	199	1.0E-06
4:35:06 PM	1690	197	196	199	1.0E-06
4:35:07 PM	1690	197	196	199	1.0E-06
4:35:08 PM	1690	197	196	200	1.0E-06
4:35:09 PM	1690	197	196	199	1.0E-06
4:35:10 PM	1690	197	196	200	1.1E-06
4:35:11 PM	1690	197	196	200	1.1E-06
4:35:12 PM	1690	197	196	199	1.1E-06
4:35:13 PM	1690	197	196	199	1.1E-06
4:35:14 PM	1690	197	196	200	1.1E-06
4:35:15 PM	1690	197	196	200	1.1E-06
4:35:16 PM	1690	197	196	200	1.2E-06
4:35:17 PM	1690	198	196	199	1.2E-06
4:35:18 PM	1690	197	196	200	1.2E-06
4:35:19 PM	1690	197	196	200	1.1E-06
4:35:20 PM	1690	197	196	200	1.2E-06
4:35:21 PM	1690	198	196	200	1.2E-06
4:35:22 PM	1690	197	196	200	1.2E-06
4:35:23 PM	1690	197	196	200	1.2E-06
4:35:24 PM	1690	197	196	199	1.2E-06
4:35:25 PM	1690	197	196	200	1.1E-06
4:35:26 PM	1690	198	196	200	1.2E-06
4:35:27 PM	1690	197	196	200	1.1E-06
4:35:28 PM	1690	198	196	200	1.2E-06
4:35:29 PM	1690	198	196	200	1.2E-06
4:35:30 PM	1690	198	196	200	1.1E-06
4:35:31 PM	1690	198	196	200	1.1E-06
4:35:32 PM	1690	198	196	200	1.1E-06
4:35:33 PM	1690	198	196	200	1.1E-06
4:35:34 PM	1690	198	196	200	1.1E-06
4:35:35 PM	1690	198	196	200	1.1E-06
4:35:36 PM	1690	198	197	200	1.1E-06
4:35:37 PM	1690	198	196	200	1.1E-06
4:35:38 PM	1690	198	196	201	1.1E-06
4:35:39 PM	1690	198	196	200	1.1E-06
4:35:40 PM	1690	198	196	200	1.1E-06
4:35:41 PM	1690	198	196	200	1.1E-06
4:35:42 PM	1690	198	196	200	1.1E-06
4:35:43 PM	1690	198	197	200	1.1E-06
4:35:44 PM	1690	198	196	200	1.1E-06
4:35:45 PM	1690	198	197	200	1.1E-06
4:35:46 PM	1690	198	196	200	1.1E-06
4:35:47 PM	1690	198	197	200	1.1E-06
4:35:48 PM	1690	198	196	200	1.1E-06
4:35:49 PM	1690	198	196	201	1.1E-06
4:35:50 PM	1690	198	196	200	1.1E-06
4:35:51 PM	1690	198	197	200	1.1E-06
4:35:52 PM	1690	198	196	201	1.1E-06
4:35:52 PM	1690	198	196	201	1.1E-06
4:35:53 PM	1690	198	197	200	1.1E-06
4:35:54 PM	1690	198	196	200	1.1E-06
4:35:55 PM	1690	197	197	200	1.0E-06
4:35:56 PM	1690	198	197	200	1.1E-06
4:35:57 PM	1690	198	196	200	1.1E-06
4:35:58 PM	1690	198	197	200	1.1E-06
4:35:59 PM	1690	198	196	200	1.1E-06
4:36:00 PM	1690	197	197	199	1.0E-06
4:36:01 PM	1690	197	196	200	1.1E-06
4:36:02 PM	1690	197	196	200	1.1E-06
Averages ->	**1690**	**198**	**196**	**200**	**1.1E-06**
				Maximum ->	**1.2E-06**

Yarmouth Research and Technology, LLC

Valve Description: 1 1/2 inch Class 800 Newmans Gate Valve **Date:** 12/12/2011

Cycle Number: 250

Time	Pressure (psig)	Bonnet (deg. C)	Body Temp (deg. C)	Inside Temp (deg. C)	Leakage (Atm cc/sec)
11:59:55 AM	1975	21	21	21	1.5E-05
11:59:56 AM	1975	21	21	21	1.5E-05
11:59:57 AM	1975	21	21	21	1.5E-05
11:59:58 AM	1975	21	21	21	1.5E-05
11:59:59 AM	1975	21	21	21	1.5E-05
12:00:00 PM	1975	21	21	21	1.5E-05
12:00:01 PM	1975	21	22	21	1.5E-05
12:00:01 PM	1975	21	21	21	1.5E-05
12:00:02 PM	1975	21	20	21	1.5E-05
12:00:03 PM	1975	22	21	21	1.5E-05
12:00:04 PM	1975	21	20	21	1.5E-05
12:00:05 PM	1975	21	21	20	1.5E-05
12:00:06 PM	1975	21	21	21	1.5E-05
12:00:07 PM	1975	21	21	21	1.5E-05
12:00:08 PM	1975	21	21	21	1.5E-05
12:00:09 PM	1975	21	21	21	1.5E-05
12:00:10 PM	1975	21	20	21	1.5E-05
12:00:11 PM	1975	21	21	21	1.5E-05
12:00:12 PM	1975	21	21	22	1.5E-05
12:00:13 PM	1975	21	21	21	1.5E-05
12:00:14 PM	1975	21	21	21	1.5E-05
12:00:15 PM	1975	21	21	21	1.4E-05
12:00:16 PM	1975	21	21	21	1.4E-05
12:00:17 PM	1975	21	21	21	1.4E-05
12:00:18 PM	1975	21	21	21	1.4E-05
12:00:19 PM	1975	21	21	21	1.4E-05
12:00:20 PM	1975	21	21	21	1.4E-05
12:00:21 PM	1975	21	21	21	1.4E-05
12:00:22 PM	1975	21	21	21	1.4E-05
12:00:23 PM	1975	21	21	21	1.4E-05
12:00:24 PM	1975	21	21	21	1.4E-05
12:00:25 PM	1975	21	21	21	1.4E-05
12:00:26 PM	1975	21	21	21	1.4E-05
12:00:27 PM	1975	21	21	21	1.4E-05
12:00:28 PM	1975	21	21	21	1.4E-05
12:00:29 PM	1975	21	21	21	1.4E-05
12:00:30 PM	1975	21	21	21	1.4E-05
12:00:31 PM	1975	21	21	21	1.4E-05
12:00:32 PM	1975	21	21	21	1.5E-05
12:00:33 PM	1975	21	21	21	1.4E-05
12:00:34 PM	1975	21	21	21	1.5E-05
12:00:35 PM	1975	21	21	21	1.5E-05
12:00:36 PM	1975	21	21	21	1.5E-05
12:00:37 PM	1975	21	21	21	1.5E-05
12:00:38 PM	1975	21	21	21	1.5E-05
12:00:39 PM	1975	21	21	21	1.5E-05
12:00:40 PM	1975	21	21	21	1.5E-05
12:00:41 PM	1975	21	21	21	1.5E-05
12:00:42 PM	1975	21	21	21	1.5E-05
12:00:43 PM	1975	21	21	21	1.5E-05
12:00:44 PM	1975	21	21	21	1.5E-05
12:00:45 PM	1975	21	20	21	1.5E-05
12:00:46 PM	1975	21	21	21	1.5E-05
12:00:47 PM	1975	21	21	21	1.5E-05
12:00:48 PM	1975	21	21	21	1.5E-05
12:00:49 PM	1975	21	21	21	1.5E-05
12:00:50 PM	1975	21	21	21	1.5E-05
12:00:51 PM	1975	21	21	20	1.5E-05
12:00:52 PM	1975	21	21	21	1.5E-05
12:00:53 PM	1975	21	21	20	1.5E-05
Averages ->	**1975**	**21**	**21**	**21**	**1.5E-05**
				Maximum ->	**1.5E-05**

Yarmouth Research and Technology, LLC

Valve Description: 1 1/2 inch Class 800 Newmans Gate Valve **Date:** 12/12/2011

Cycle Number: 250

Time	Pressure (psig)	Bonnet (deg. C)	Body Temp (deg. C)	Inside Temp (deg. C)	Leakage (Atm cc/sec)
12:01:16 PM	1975	21	21	21	1.6E-05
12:01:17 PM	1975	21	21	21	1.6E-05
12:01:18 PM	1975	21	21	21	1.6E-05
12:01:19 PM	1975	21	21	21	1.6E-05
12:01:20 PM	1975	21	21	21	1.6E-05
12:01:21 PM	1975	21	21	21	1.6E-05
12:01:22 PM	1975	21	21	21	1.6E-05
12:01:23 PM	1975	21	21	21	1.6E-05
12:01:24 PM	1975	21	21	21	1.6E-05
12:01:25 PM	1975	21	21	21	1.6E-05
12:01:26 PM	1975	21	21	21	1.6E-05
12:01:27 PM	1975	20	21	21	1.6E-05
12:01:28 PM	1975	21	21	21	1.6E-05
12:01:29 PM	1975	21	21	21	1.6E-05
12:01:30 PM	1975	21	21	21	1.6E-05
12:01:31 PM	1975	21	21	21	1.6E-05
12:01:32 PM	1975	21	21	21	1.7E-05
12:01:33 PM	1975	21	21	21	1.7E-05
12:01:34 PM	1975	21	21	21	1.7E-05
12:01:35 PM	1975	21	21	21	1.7E-05
12:01:36 PM	1975	21	21	21	1.7E-05
12:01:37 PM	1975	21	21	21	1.7E-05
12:01:38 PM	1975	21	21	21	1.7E-05
12:01:39 PM	1975	21	21	21	1.7E-05
12:01:40 PM	1975	21	21	21	1.7E-05
12:01:41 PM	1975	21	21	21	1.7E-05
12:01:42 PM	1975	21	21	21	1.7E-05
12:01:43 PM	1975	21	21	21	1.7E-05
12:01:43 PM	1975	21	20	22	1.7E-05
12:01:44 PM	1975	21	21	20	1.7E-05
12:01:45 PM	1975	21	21	21	1.7E-05
12:01:46 PM	1975	21	21	21	1.7E-05
12:01:47 PM	1975	21	21	21	1.7E-05
12:01:48 PM	1975	21	21	21	1.7E-05
12:01:49 PM	1975	21	20	21	1.7E-05
12:01:50 PM	1975	21	21	21	1.7E-05
12:01:51 PM	1975	21	21	21	1.7E-05
12:01:52 PM	1975	22	21	21	1.7E-05
12:01:53 PM	1975	21	21	21	1.6E-05
12:01:54 PM	1975	21	21	21	1.6E-05
12:01:55 PM	1975	21	21	21	1.6E-05
12:01:56 PM	1975	21	21	21	1.6E-05
12:01:57 PM	1975	21	21	21	1.6E-05
12:01:58 PM	1975	21	21	21	1.6E-05
12:01:59 PM	1975	21	21	21	1.6E-05
12:02:00 PM	1975	21	21	21	1.6E-05
12:02:01 PM	1975	21	21	21	1.6E-05
12:02:02 PM	1975	21	21	21	1.6E-05
12:02:03 PM	1975	21	21	21	1.6E-05
12:02:04 PM	1975	21	21	21	1.6E-05
12:02:05 PM	1975	21	21	21	1.6E-05
12:02:06 PM	1975	21	21	21	1.6E-05
12:02:07 PM	1975	21	21	21	1.6E-05
12:02:08 PM	1975	21	21	21	1.6E-05
12:02:09 PM	1975	21	21	21	1.6E-05
12:02:10 PM	1975	21	21	21	1.6E-05
12:02:11 PM	1975	21	21	21	1.7E-05
12:02:12 PM	1975	21	21	21	1.9E-05
12:02:13 PM	1975	21	21	21	2.2E-05
12:02:14 PM	1975	21	21	21	2.6E-05
Averages ->	**1975**	**21**	**21**	**21**	**1.7E-05**
				Maximum ->	**2.6E-05**

Yarmouth Research and Technology, LLC

Valve Description: 1 1/2 inch Class 800 Newmans Gate Valve **Date:** 12/12/2011

Cycle Number: 375

Time	Pressure (psig)	Bonnet (deg. C)	Body Temp (deg. C)	Inside Temp (deg. C)	Leakage (Atm cc/sec)
2:26:39 PM	1975	22	22	22	1.3E-05
2:26:40 PM	1975	22	22	22	1.3E-05
2:26:41 PM	1975	22	22	22	1.3E-05
2:26:42 PM	1975	22	22	22	1.3E-05
2:26:43 PM	1975	22	22	22	1.3E-05
2:26:44 PM	1975	22	22	22	1.3E-05
2:26:45 PM	1975	444	272	270	1.3E-05
2:26:46 PM	1975	514	273	269	1.3E-05
2:26:46 PM	1975	515	275	269	1.3E-05
2:26:47 PM	1975	515	276	269	1.3E-05
2:26:48 PM	1975	434	277	270	1.3E-05
2:26:49 PM	1975	276	277	271	1.3E-05
2:26:50 PM	1975	276	278	274	1.3E-05
2:26:51 PM	1975	276	394	276	1.3E-05
2:26:52 PM	1975	277	518	279	1.3E-05
2:26:53 PM	1975	275	518	282	1.3E-05
2:26:54 PM	1975	275	518	283	1.3E-05
2:26:55 PM	1975	275	495	285	1.3E-05
2:26:56 PM	1975	273	289	287	1.3E-05
2:26:57 PM	1975	272	279	289	1.3E-05
2:26:58 PM	1975	269	279	290	1.3E-05
2:26:59 PM	1975	269	278	289	1.3E-05
2:27:00 PM	1975	270	279	327	1.3E-05
2:27:01 PM	1975	270	279	502	1.3E-05
2:27:02 PM	1975	269	278	533	1.3E-05
2:27:03 PM	1975	269	277	534	1.3E-05
2:27:04 PM	1975	269	277	532	1.3E-05
2:27:05 PM	1975	269	275	550	1.3E-05
2:27:06 PM	1975	269	275	577	1.3E-05
2:27:07 PM	1975	269	273	535	1.3E-05
2:27:08 PM	1975	269	274	533	1.3E-05
2:27:09 PM	1975	269	274	534	1.3E-05
2:27:10 PM	1975	269	275	534	1.3E-05
2:27:11 PM	1975	269	273	536	1.3E-05
2:27:12 PM	1975	269	274	535	1.3E-05
2:27:13 PM	1975	269	274	535	1.3E-05
2:27:14 PM	1975	269	275	535	1.3E-05
2:27:15 PM	1975	269	275	575	1.3E-05
2:27:16 PM	1975	269	276	535	1.3E-05
2:27:17 PM	1975	269	275	530	1.3E-05
2:27:18 PM	1975	269	276	530	1.3E-05
2:27:19 PM	1975	269	277	531	1.3E-05
2:27:20 PM	1975	269	276	529	1.3E-05
2:27:21 PM	1975	269	277	536	1.3E-05
2:27:22 PM	1975	269	277	533	1.3E-05
2:27:23 PM	1975	269	278	532	1.3E-05
2:27:24 PM	1975	269	278	531	1.3E-05
2:27:25 PM	1975	269	278	530	1.3E-05
2:27:26 PM	1975	269	279	530	1.3E-05
2:27:27 PM	1975	269	278	520	1.2E-05
2:27:28 PM	1975	269	279	372	1.2E-05
2:27:29 PM	1975	270	279	290	1.2E-05
2:27:30 PM	1975	269	279	292	1.2E-05
2:27:31 PM	1975	271	281	286	1.2E-05
2:27:32 PM	1975	273	279	286	1.2E-05
2:27:33 PM	1975	275	484	284	1.2E-05
2:27:34 PM	1975	274	519	283	1.2E-05
2:27:35 PM	1975	275	517	280	1.2E-05
2:27:36 PM	1975	276	517	278	1.2E-05
2:27:37 PM	1975	278	339	274	1.2E-05
Averages ->	**1975**	**264**	**286**	**371**	**1.3E-05**
				Maximum ->	**1.3E-05**

Yarmouth Research and Technology, LLC

Valve Description: 1 1/2 inch Class 800 Newmans Gate Valve **Date:** 12/12/2011

Cycle Number: 375

Time	Pressure (psig)	Bonnet (deg. C)	Body Temp (deg. C)	Inside Temp (deg. C)	Leakage (Atm cc/sec)
2:30:53 PM	1975	23	23	22	1.7E-05
2:30:54 PM	1975	23	23	22	1.7E-05
2:30:55 PM	1975	22	23	22	1.7E-05
2:30:55 PM	1975	22	22	22	1.7E-05
2:30:56 PM	1975	22	23	23	1.8E-05
2:30:57 PM	1975	22	23	22	1.8E-05
2:30:58 PM	1975	22	23	23	1.8E-05
2:30:59 PM	1975	22	23	22	1.8E-05
2:31:00 PM	1975	23	23	22	1.8E-05
2:31:01 PM	1975	23	23	22	1.8E-05
2:31:02 PM	1975	23	23	22	1.8E-05
2:31:03 PM	1975	23	23	23	1.8E-05
2:31:04 PM	1975	23	23	22	1.8E-05
2:31:05 PM	1975	22	23	22	1.8E-05
2:31:06 PM	1975	22	23	22	1.7E-05
2:31:07 PM	1975	22	23	22	1.7E-05
2:31:08 PM	1975	22	23	23	1.7E-05
2:31:09 PM	1975	22	23	22	1.6E-05
2:31:10 PM	1975	22	23	22	1.6E-05
2:31:11 PM	1975	23	23	23	1.6E-05
2:31:12 PM	1975	23	22	22	1.6E-05
2:31:13 PM	1975	23	23	22	1.6E-05
2:31:14 PM	1975	23	23	22	1.6E-05
2:31:15 PM	1975	22	23	23	1.6E-05
2:31:16 PM	1975	23	23	23	1.6E-05
2:31:17 PM	1975	22	23	23	1.6E-05
2:31:18 PM	1975	23	23	23	1.6E-05
2:31:19 PM	1975	22	23	23	1.6E-05
2:31:20 PM	1975	23	23	22	1.6E-05
2:31:21 PM	1975	23	23	23	1.6E-05
2:31:22 PM	1975	23	23	23	1.6E-05
2:31:23 PM	1975	23	24	23	1.6E-05
2:31:24 PM	1975	22	24	22	1.6E-05
2:31:25 PM	1975	23	23	23	1.6E-05
2:31:26 PM	1975	23	23	22	1.6E-05
2:31:27 PM	1975	23	23	22	1.6E-05
2:31:28 PM	1975	22	23	23	1.6E-05
2:31:29 PM	1975	22	23	22	1.6E-05
2:31:30 PM	1975	23	23	22	1.6E-05
2:31:31 PM	1975	23	23	23	1.6E-05
2:31:32 PM	1975	22	24	23	1.6E-05
2:31:33 PM	1975	23	23	22	1.5E-05
2:31:34 PM	1975	23	23	23	1.5E-05
2:31:35 PM	1975	23	23	23	1.5E-05
2:31:36 PM	1975	22	23	22	1.5E-05
2:31:37 PM	1975	23	23	23	1.5E-05
2:31:38 PM	1975	23	23	22	1.5E-05
2:31:39 PM	1975	23	23	23	1.4E-05
2:31:40 PM	1975	23	23	22	1.4E-05
2:31:41 PM	1975	23	24	22	1.4E-05
2:31:42 PM	1975	23	23	23	1.4E-05
2:31:43 PM	1975	23	23	23	1.4E-05
2:31:44 PM	1975	22	24	23	1.4E-05
2:31:45 PM	1975	23	23	23	1.4E-05
2:31:46 PM	1975	22	23	23	1.4E-05
2:31:47 PM	1975	22	23	23	1.4E-05
2:31:48 PM	1975	23	23	23	1.4E-05
2:31:49 PM	1975	22	23	22	1.4E-05
2:31:50 PM	1975	23	23	23	1.4E-05
2:31:51 PM	1975	23	23	22	1.4E-05
Averages ->	**1975**	**23**	**23**	**22**	**1.6E-05**
				Maximum ->	**1.8E-05**

Yarmouth Research and Technology, LLC

Valve Description: 1 1/2 inch Class 800 Newmans Gate Valve **Date:** 12/12/2011

Cycle Number: 375

Time	Pressure (psig)	Bonnet (deg. C)	Body Temp (deg. C)	Inside Temp (deg. C)	Leakage (Atm cc/sec)
3:41:43 PM	1690	197	195	200	3.6E-06
3:41:44 PM	1690	197	195	200	3.6E-06
3:41:45 PM	1690	197	195	200	3.6E-06
3:41:46 PM	1690	197	194	200	3.6E-06
3:41:47 PM	1690	197	195	200	3.6E-06
3:41:48 PM	1690	197	195	200	3.6E-06
3:41:49 PM	1690	197	195	200	3.6E-06
3:41:50 PM	1690	198	195	200	3.7E-06
3:41:50 PM	1690	197	195	200	3.7E-06
3:41:51 PM	1690	197	195	200	3.8E-06
3:41:52 PM	1690	197	195	200	3.8E-06
3:41:53 PM	1690	197	195	200	3.9E-06
3:41:54 PM	1690	197	195	200	4.0E-06
3:41:55 PM	1690	197	195	200	4.1E-06
3:41:56 PM	1690	197	195	200	4.1E-06
3:41:57 PM	1690	197	195	200	4.2E-06
3:41:58 PM	1690	197	195	200	4.3E-06
3:41:59 PM	1690	198	195	200	4.3E-06
3:42:00 PM	1690	197	195	200	4.4E-06
3:42:01 PM	1690	197	195	200	4.4E-06
3:42:02 PM	1690	197	195	200	4.4E-06
3:42:03 PM	1690	198	194	200	4.4E-06
3:42:04 PM	1690	198	195	200	4.5E-06
3:42:05 PM	1690	197	195	200	4.4E-06
3:42:06 PM	1690	197	195	200	4.4E-06
3:42:07 PM	1690	197	195	200	4.4E-06
3:42:08 PM	1690	197	195	200	4.4E-06
3:42:09 PM	1690	197	195	200	4.4E-06
3:42:10 PM	1690	197	195	200	4.4E-06
3:42:11 PM	1690	197	194	200	4.4E-06
3:42:12 PM	1690	197	195	200	4.4E-06
3:42:13 PM	1690	197	195	200	4.4E-06
3:42:14 PM	1690	197	194	200	4.4E-06
3:42:15 PM	1690	197	195	200	4.4E-06
3:42:16 PM	1690	197	194	200	4.4E-06
3:42:17 PM	1690	198	195	200	4.4E-06
3:42:18 PM	1690	197	195	200	4.3E-06
3:42:19 PM	1690	197	195	200	4.3E-06
3:42:20 PM	1690	197	195	200	4.4E-06
3:42:21 PM	1690	197	195	200	4.4E-06
3:42:22 PM	1690	198	194	200	4.3E-06
3:42:23 PM	1690	197	195	200	4.3E-06
3:42:24 PM	1690	197	195	200	4.3E-06
3:42:25 PM	1690	197	195	199	4.3E-06
3:42:26 PM	1690	197	194	199	4.3E-06
3:42:27 PM	1690	197	194	200	4.3E-06
3:42:28 PM	1690	197	195	199	4.2E-06
3:42:29 PM	1690	197	195	200	4.2E-06
3:42:30 PM	1690	197	194	200	4.2E-06
3:42:31 PM	1690	197	194	200	4.2E-06
3:42:32 PM	1690	197	195	200	4.2E-06
3:42:33 PM	1690	197	195	200	4.2E-06
3:42:34 PM	1690	197	195	199	4.2E-06
3:42:35 PM	1690	197	195	200	4.2E-06
3:42:36 PM	1690	197	195	200	4.2E-06
3:42:37 PM	1690	197	195	199	4.2E-06
3:42:38 PM	1690	197	195	199	4.2E-06
3:42:39 PM	1690	197	195	200	4.2E-06
3:42:40 PM	1690	197	194	200	4.2E-06
3:42:41 PM	1690	197	194	200	4.1E-06
Averages ->	**1690**	**197**	**195**	**200**	**4.2E-06**
				Maximum ->	**4.5E-06**

Yarmouth Research and Technology, LLC

Valve Description: 1 1/2 inch Class 800 Newmans Gate Valve **Date:** 12/12/2011

Cycle Number: 375

Time	Pressure (psig)	Bonnet (deg. C)	Body Temp (deg. C)	Inside Temp (deg. C)	Leakage (Atm cc/sec)
3:44:27 PM	1690	197	195	200	4.6E-06
3:44:28 PM	1690	197	196	200	4.6E-06
3:44:29 PM	1690	197	195	199	4.6E-06
3:44:30 PM	1690	197	195	200	4.7E-06
3:44:31 PM	1690	197	195	199	4.6E-06
3:44:32 PM	1690	197	195	200	4.7E-06
3:44:33 PM	1690	197	195	200	4.7E-06
3:44:34 PM	1690	197	195	199	4.7E-06
3:44:35 PM	1690	197	195	200	4.7E-06
3:44:36 PM	1690	197	196	200	4.7E-06
3:44:37 PM	1690	197	195	200	4.7E-06
3:44:38 PM	1690	197	195	199	4.7E-06
3:44:39 PM	1690	197	195	200	4.7E-06
3:44:40 PM	1690	197	195	200	4.6E-06
3:44:41 PM	1690	197	195	200	4.7E-06
3:44:42 PM	1690	197	194	200	4.6E-06
3:44:43 PM	1690	197	195	200	4.6E-06
3:44:44 PM	1690	197	195	200	4.6E-06
3:44:45 PM	1690	197	195	200	4.6E-06
3:44:46 PM	1690	197	195	200	4.6E-06
3:44:47 PM	1690	197	195	200	4.5E-06
3:44:48 PM	1690	197	195	200	4.6E-06
3:44:49 PM	1690	197	195	200	4.5E-06
3:44:50 PM	1690	197	195	200	4.5E-06
3:44:51 PM	1690	197	195	199	4.5E-06
3:44:52 PM	1690	197	195	200	4.4E-06
3:44:53 PM	1690	197	195	200	4.4E-06
3:44:54 PM	1690	197	195	200	4.4E-06
3:44:54 PM	1690	197	195	200	4.3E-06
3:44:55 PM	1690	197	194	199	4.4E-06
3:44:56 PM	1690	197	195	200	4.3E-06
3:44:57 PM	1690	197	194	199	4.3E-06
3:44:58 PM	1690	197	195	199	4.3E-06
3:44:59 PM	1690	197	195	199	4.3E-06
3:45:00 PM	1690	197	194	199	4.3E-06
3:45:01 PM	1690	197	195	200	4.3E-06
3:45:02 PM	1690	196	195	200	4.3E-06
3:45:03 PM	1690	197	195	199	4.3E-06
3:45:04 PM	1690	197	195	200	4.3E-06
3:45:05 PM	1690	197	195	200	4.3E-06
3:45:06 PM	1690	197	195	200	4.3E-06
3:45:07 PM	1690	197	195	200	4.3E-06
3:45:08 PM	1690	197	195	199	4.3E-06
3:45:09 PM	1690	197	194	200	4.3E-06
3:45:10 PM	1690	197	194	200	4.3E-06
3:45:11 PM	1690	197	194	200	4.3E-06
3:45:12 PM	1690	196	195	200	4.3E-06
3:45:13 PM	1690	197	194	200	4.4E-06
3:45:14 PM	1690	197	195	199	4.3E-06
3:45:15 PM	1690	197	195	200	4.4E-06
3:45:16 PM	1690	197	195	199	4.3E-06
3:45:17 PM	1690	197	195	199	4.4E-06
3:45:18 PM	1690	197	195	200	4.3E-06
3:45:19 PM	1690	197	195	200	4.3E-06
3:45:20 PM	1690	197	195	199	4.3E-06
3:45:21 PM	1690	197	195	200	4.3E-06
3:45:22 PM	1690	197	195	200	4.3E-06
3:45:23 PM	1690	197	195	200	4.3E-06
3:45:24 PM	1690	197	195	200	4.3E-06
3:45:25 PM	1690	197	195	200	4.3E-06
Averages ->	**1690**	**197**	**195**	**200**	**4.4E-06**
				Maximum ->	**4.7E-06**

Yarmouth Research and Technology, LLC

Valve Description: 1 1/2 inch Class 800 Newmans Gate Valve **Date:** 12/12/2011

Cycle Number: 500

Time	Pressure (psig)	Bonnet (deg. C)	Body Temp (deg. C)	Inside Temp (deg. C)	Leakage (Atm cc/sec)
4:54:37 PM	1690	197	198	200	3.6E-06
4:54:38 PM	1690	197	198	200	3.6E-06
4:54:39 PM	1690	197	198	200	3.6E-06
4:54:40 PM	1690	197	198	200	3.6E-06
4:54:41 PM	1690	197	198	200	3.6E-06
4:54:42 PM	1690	197	198	200	3.6E-06
4:54:43 PM	1690	197	198	200	3.6E-06
4:54:44 PM	1690	197	198	200	3.6E-06
4:54:45 PM	1690	197	198	200	3.6E-06
4:54:46 PM	1690	197	198	200	3.6E-06
4:54:47 PM	1690	197	198	200	3.6E-06
4:54:48 PM	1690	197	198	200	3.6E-06
4:54:49 PM	1690	197	198	200	3.6E-06
4:54:50 PM	1690	197	198	200	3.6E-06
4:54:51 PM	1690	197	198	200	3.7E-06
4:54:52 PM	1690	197	198	200	3.7E-06
4:54:53 PM	1690	197	198	200	3.7E-06
4:54:54 PM	1690	197	198	200	3.7E-06
4:54:55 PM	1690	197	198	200	3.7E-06
4:54:56 PM	1690	197	198	200	3.8E-06
4:54:57 PM	1690	198	198	200	3.8E-06
4:54:58 PM	1690	197	198	200	3.8E-06
4:54:59 PM	1690	197	198	200	3.8E-06
4:55:00 PM	1690	197	198	200	3.8E-06
4:55:01 PM	1690	197	198	200	3.8E-06
4:55:02 PM	1690	197	198	200	3.8E-06
4:55:03 PM	1690	197	198	200	3.8E-06
4:55:04 PM	1690	197	198	200	3.8E-06
4:55:05 PM	1690	197	198	200	3.8E-06
4:55:06 PM	1690	197	198	200	3.8E-06
4:55:07 PM	1690	197	198	200	3.8E-06
4:55:08 PM	1690	197	198	200	3.8E-06
4:55:09 PM	1690	197	198	200	3.8E-06
4:55:10 PM	1690	197	198	200	3.8E-06
4:55:11 PM	1690	197	198	200	3.7E-06
4:55:12 PM	1690	197	198	200	3.7E-06
4:55:13 PM	1690	197	198	200	3.7E-06
4:55:14 PM	1690	197	198	200	3.7E-06
4:55:15 PM	1690	197	198	200	3.7E-06
4:55:16 PM	1690	197	198	200	3.6E-06
4:55:17 PM	1690	197	198	200	3.6E-06
4:55:18 PM	1690	197	198	200	3.6E-06
4:55:19 PM	1690	197	198	200	3.6E-06
4:55:20 PM	1690	197	198	200	3.6E-06
4:55:21 PM	1690	197	198	200	3.6E-06
4:55:22 PM	1690	197	198	200	3.6E-06
4:55:22 PM	1690	197	198	200	3.6E-06
4:55:23 PM	1690	197	198	200	3.7E-06
4:55:24 PM	1690	197	198	200	3.7E-06
4:55:25 PM	1690	197	198	199	3.8E-06
4:55:26 PM	1690	197	198	200	3.9E-06
4:55:27 PM	1690	197	198	200	4.1E-06
4:55:28 PM	1690	197	198	200	4.2E-06
4:55:29 PM	1690	197	197	200	4.4E-06
4:55:30 PM	1690	197	198	200	4.5E-06
4:55:31 PM	1690	197	198	200	4.7E-06
4:55:32 PM	1690	197	198	200	4.8E-06
4:55:33 PM	1690	197	198	200	4.9E-06
4:55:34 PM	1690	197	198	200	5.0E-06
4:55:35 PM	1690	197	198	200	5.0E-06
Averages ->	**1690**	**197**	**198**	**200**	**3.8E-06**
				Maximum ->	**5.0E-06**

Yarmouth Research and Technology, LLC

Valve Description: 1 1/2 inch Class 800 Newmans Gate Valve **Date:** 12/12/2011

Cycle Number: 500

Time	Pressure (psig)	Bonnet (deg. C)	Body Temp (deg. C)	Inside Temp (deg. C)	Leakage (Atm cc/sec)
4:55:46 PM	1690	197	198	200	4.4E-06
4:55:47 PM	1690	197	198	200	4.3E-06
4:55:48 PM	1690	197	198	200	4.3E-06
4:55:49 PM	1690	197	198	200	4.3E-06
4:55:50 PM	1690	197	198	200	4.2E-06
4:55:51 PM	1690	197	198	200	4.2E-06
4:55:52 PM	1690	197	198	200	4.2E-06
4:55:53 PM	1690	197	198	200	4.2E-06
4:55:54 PM	1690	197	198	199	4.2E-06
4:55:55 PM	1690	197	197	200	4.2E-06
4:55:56 PM	1690	197	198	200	4.1E-06
4:55:57 PM	1690	197	198	200	4.1E-06
4:55:58 PM	1690	197	198	200	4.1E-06
4:55:59 PM	1690	197	198	200	4.1E-06
4:56:00 PM	1690	197	198	200	4.1E-06
4:56:01 PM	1690	197	198	200	4.0E-06
4:56:02 PM	1690	197	198	200	4.0E-06
4:56:03 PM	1690	197	198	200	4.0E-06
4:56:04 PM	1690	197	198	200	3.9E-06
4:56:05 PM	1690	197	198	200	3.9E-06
4:56:06 PM	1690	197	198	200	3.9E-06
4:56:07 PM	1690	197	198	200	3.9E-06
4:56:08 PM	1690	197	198	200	3.8E-06
4:56:09 PM	1690	197	198	200	3.8E-06
4:56:10 PM	1690	197	198	200	3.8E-06
4:56:10 PM	1690	197	198	200	3.8E-06
4:56:11 PM	1690	197	198	200	3.8E-06
4:56:12 PM	1690	197	198	200	3.8E-06
4:56:13 PM	1690	197	198	200	3.8E-06
4:56:14 PM	1690	197	198	200	3.8E-06
4:56:15 PM	1690	197	198	200	3.8E-06
4:56:16 PM	1690	197	197	200	3.8E-06
4:56:17 PM	1690	197	198	200	3.8E-06
4:56:18 PM	1690	197	198	200	3.8E-06
4:56:19 PM	1690	197	198	200	3.8E-06
4:56:20 PM	1690	197	198	200	3.8E-06
4:56:21 PM	1690	197	198	200	3.8E-06
4:56:22 PM	1690	197	198	200	3.8E-06
4:56:23 PM	1690	197	198	200	3.8E-06
4:56:24 PM	1690	197	198	200	3.8E-06
4:56:25 PM	1690	198	198	200	3.8E-06
4:56:26 PM	1690	197	198	200	3.8E-06
4:56:27 PM	1690	198	198	200	3.8E-06
4:56:28 PM	1690	197	198	200	3.7E-06
4:56:29 PM	1690	197	198	200	3.7E-06
4:56:30 PM	1690	197	198	200	3.7E-06
4:56:31 PM	1690	197	198	200	3.7E-06
4:56:32 PM	1690	197	198	200	3.7E-06
4:56:33 PM	1690	197	198	200	3.7E-06
4:56:34 PM	1690	197	198	200	3.7E-06
4:56:35 PM	1690	198	198	200	3.7E-06
4:56:36 PM	1690	197	198	200	3.7E-06
4:56:37 PM	1690	197	198	200	3.7E-06
4:56:38 PM	1690	198	198	200	3.7E-06
4:56:39 PM	1690	197	198	200	3.7E-06
4:56:40 PM	1690	198	198	200	3.7E-06
4:56:41 PM	1690	197	198	200	3.7E-06
4:56:42 PM	1690	197	198	199	3.7E-06
4:56:43 PM	1690	197	198	200	3.7E-06
4:56:44 PM	1690	197	198	200	3.7E-06
Averages ->	**1690**	**197**	**198**	**200**	**3.9E-06**
				Maximum ->	**4.4E-06**

mouth Research and Technology, LLC

Valve De Class 800 Newmans Gate Valve **Date:** 12/13/2011

Cycle 0

Tim	ure (sig)	Bonnet (deg. C)	Body Temp (deg. C)	Inside Temp (deg. C)	Leakage (Atm cc/sec)
9:10:50	75	22	22	22	2.3E-06
9:10:51	75	22	22	22	2.3E-06
9:10:52	75	22	21	22	2.3E-06
9:10:53	75	21	22	22	2.3E-06
9:10:53	75	22	22	22	2.3E-06
9:10:54	75	22	21	22	2.3E-06
9:10:55	75	22	22	22	2.3E-06
9:10:56	75	22	22	22	2.4E-06
9:10:57	75	22	21	22	2.4E-06
9:10:58	75	22	21	22	2.4E-06
9:10:59	75	22	22	21	2.4E-06
9:11:00	75	22	21	22	2.4E-06
9:11:01	75	22	22	22	2.4E-06
9:11:02	75	21	22	22	2.4E-06
9:11:03	75	22	22	22	2.4E-06
9:11:04	75	22	21	22	2.4E-06
9:11:05	75	22	22	22	2.4E-06
9:11:06	75	21	22	22	2.4E-06
9:11:07	75	22	21	22	2.4E-06
9:11:08	75	22	22	22	2.4E-06
9:11:09	75	22	21	22	2.4E-06
9:11:10	75	21	22	22	2.4E-06
9:11:11	75	22	21	22	2.4E-06
9:11:12	75	22	21	22	2.4E-06
9:11:13	75	22	21	22	2.4E-06
9:11:14	75	22	22	22	2.4E-06
9:11:15	75	21	21	22	2.4E-06
9:11:16	75	22	22	21	2.4E-06
9:11:17	75	22	22	22	2.4E-06
9:11:18	75	22	21	22	2.4E-06
9:11:19	75	22	21	22	2.4E-06
9:11:20	75	21	21	22	2.3E-06
9:11:21	[illegible]	22	22	22	2.3E-06
9:11:22	75	22	21	22	2.3E-06
9:11:23	75	22	21	22	2.3E-06
9:11:24	75	21	21	22	2.3E-06
9:11:25	75	22	22	22	2.3E-06
9:11:26	75	22	22	22	2.3E-06
9:11:27	75	22	22	22	2.3E-06
9:11:28	75	22	21	22	2.3E-06
9:11:29	75	22	22	22	2.3E-06
9:11:30	75	22	21	21	2.3E-06
9:11:31	75	21	22	22	2.3E-06
9:11:32	75	22	21	21	2.3E-06
9:11:33	75	22	22	22	2.3E-06
9:11:34	75	21	22	22	2.3E-06
9:11:35	75	22	21	21	2.3E-06
9:11:36	75	22	22	21	2.3E-06
9:11:37	75	22	22	22	2.3E-06
9:11:38	75	22	22	22	2.3E-06
9:11:39	75	21	22	22	2.3E-06
9:11:40	[illegible]	22	21	21	2.3E-06
9:11:41	75	22	21	22	2.2E-06
9:11:42	75	22	22	22	2.2E-06
9:11:43	75	22	22	22	2.2E-06
9:11:44	75	22	21	22	2.2E-06
9:11:45	75	22	21	22	2.2E-06
9:11:46	75	22	21	22	2.2E-06
9:11:47	75	22	22	22	2.2E-06
9:11:48	75	22	22	22	2.2E-06
Av	**75**	**22**	**22**	**22**	**2.3E-06**
				Maximum ->	**2.4E-06**

Yarmouth Research and Technology, LLC

Valve Description: 1 1/2 inch Class 800 Newmans Gate Valve **Date:** 12/13/2011

Cycle Number: 500

Time	Pressure (psig)	Bonnet (deg. C)	Body Temp (deg. C)	Inside Temp (deg. C)	Leakage (Atm cc/sec)
9:13:20 AM	1975	21	22	22	2.4E-06
9:13:21 AM	1975	22	22	22	2.4E-06
9:13:22 AM	1975	22	22	21	2.4E-06
9:13:23 AM	1975	22	22	21	2.4E-06
9:13:24 AM	1975	21	22	21	2.4E-06
9:13:25 AM	1975	21	22	21	2.4E-06
9:13:26 AM	1975	21	22	22	2.4E-06
9:13:27 AM	1975	22	22	22	2.4E-06
9:13:28 AM	1975	22	21	22	2.4E-06
9:13:29 AM	1975	22	21	22	2.4E-06
9:13:30 AM	1975	22	21	22	2.4E-06
9:13:31 AM	1975	21	22	22	2.4E-06
9:13:32 AM	1975	22	22	22	2.4E-06
9:13:33 AM	1975	22	22	21	2.4E-06
9:13:34 AM	1975	22	22	22	2.4E-06
9:13:35 AM	1975	22	22	22	2.4E-06
9:13:36 AM	1975	22	22	22	2.4E-06
9:13:37 AM	1975	21	22	22	2.4E-06
9:13:38 AM	1975	22	22	22	2.4E-06
9:13:39 AM	1975	22	21	21	2.4E-06
9:13:40 AM	1975	22	21	21	2.4E-06
9:13:41 AM	1975	22	22	22	2.4E-06
9:13:42 AM	1975	22	22	22	2.4E-06
9:13:43 AM	1975	22	22	22	2.4E-06
9:13:44 AM	1975	22	22	21	2.4E-06
9:13:45 AM	1975	22	22	21	2.4E-06
9:13:46 AM	1975	22	22	22	2.4E-06
9:13:47 AM	1975	22	21	22	2.4E-06
9:13:48 AM	1975	22	22	21	2.4E-06
9:13:48 AM	1975	22	22	22	2.4E-06
9:13:49 AM	1975	22	22	22	2.4E-06
9:13:50 AM	1975	22	22	21	2.4E-06
9:13:51 AM	1975	22	22	22	2.4E-06
9:13:52 AM	1975	22	21	22	2.4E-06
9:13:53 AM	1975	22	22	22	2.4E-06
9:13:54 AM	1975	22	22	21	2.5E-06
9:13:55 AM	1975	22	22	22	2.4E-06
9:13:56 AM	1975	22	22	22	2.5E-06
9:13:57 AM	1975	22	21	21	2.4E-06
9:13:58 AM	1975	22	21	22	2.4E-06
9:13:59 AM	1975	22	22	22	2.5E-06
9:14:00 AM	1975	22	22	22	2.6E-06
9:14:01 AM	1975	22	21	21	3.0E-06
9:14:02 AM	1975	22	22	22	4.5E-06
9:14:03 AM	1975	22	22	22	9.2E-06
9:14:04 AM	1975	22	22	21	2.1E-05
9:14:05 AM	1975	22	21	22	4.3E-05
9:14:06 AM	1975	21	21	21	4.8E-05
9:14:07 AM	1975	21	21	21	4.8E-05
9:14:08 AM	1975	21	21	21	4.8E-05
9:14:09 AM	1975	22	22	21	4.8E-05
9:14:10 AM	1975	22	21	22	4.8E-05
9:14:11 AM	1975	22	22	22	4.8E-05
9:14:12 AM	1975	22	21	22	4.8E-05
9:14:13 AM	1975	22	21	21	4.8E-05
9:14:14 AM	1975	22	21	21	4.8E-05
9:14:15 AM	1975	22	22	22	4.8E-05
9:14:16 AM	1975	22	22	22	4.8E-05
9:14:17 AM	1975	21	22	21	4.8E-05
9:14:18 AM	1975	22	21	22	4.8E-05
Averages ->	**1975**	**22**	**22**	**22**	**1.3E-05**
				Maximum ->	**4.8E-05**

Yarmouth Research and Technology, LLC

Valve Description: 1 1/2 inch Class 800 Newmans Gate Valve **Date:** 12/9/2011

Cycle Number: 0

Bonnet Gasket

Time	Pressure (psig)	Bonnet (deg. C)	Body Temp (deg. C)	Inside Temp (deg. C)	Leakage (PPMv)
10:50:16 AM	1975	22	21	22	1.3
10:50:17 AM	1975	22	21	22	1.3
10:50:18 AM	1975	22	22	22	1.3
10:50:19 AM	1975	22	22	22	1.3
10:50:20 AM	1975	22	21	22	1.2
10:50:21 AM	1975	22	21	22	1.3
10:50:22 AM	1975	22	21	22	1.2
10:50:23 AM	1975	22	21	22	1.3
10:50:24 AM	1975	22	21	22	1.3
10:50:25 AM	1975	22	21	22	1.2
10:50:26 AM	1975	22	21	22	1.2
10:50:27 AM	1975	22	22	22	1.2
10:50:28 AM	1975	22	22	22	1.2
10:50:29 AM	1975	22	22	22	1.2
10:50:30 AM	1975	22	21	22	1.2
10:50:31 AM	1975	22	21	21	1.3
10:50:32 AM	1975	22	21	22	1.2
10:50:33 AM	1975	22	21	22	1.3
10:50:34 AM	1975	22	21	22	1.2
10:50:35 AM	1975	22	21	22	1.3
10:50:36 AM	1975	22	21	22	1.3
10:50:37 AM	1975	22	21	22	1.3
10:50:38 AM	1975	22	21	22	1.3
10:50:39 AM	1975	22	21	22	1.3
10:50:40 AM	1975	22	22	22	1.3
10:50:41 AM	1975	22	21	22	1.4
10:50:42 AM	1975	22	21	22	1.4
10:50:43 AM	1975	22	22	22	1.5
10:50:44 AM	1975	22	22	22	1.5
10:50:45 AM	1975	22	22	22	1.5
10:50:46 AM	1975	22	22	22	1.6
10:50:47 AM	1975	22	21	22	1.6
10:50:48 AM	1975	22	21	22	1.6
10:50:49 AM	1975	22	22	22	1.6
10:50:50 AM	1975	22	22	22	1.6
10:50:51 AM	1975	22	21	22	1.6
10:50:52 AM	1975	22	21	22	1.6
10:50:53 AM	1975	22	21	22	1.6
10:50:54 AM	1975	22	22	22	1.6
10:50:54 AM	1975	22	21	22	1.6
10:50:55 AM	1975	22	21	22	1.6
10:50:56 AM	1975	22	21	22	1.6
10:50:57 AM	1975	22	21	22	1.5
10:50:58 AM	1975	22	21	22	1.5
10:50:59 AM	1975	22	21	22	1.6
10:51:00 AM	1975	22	22	22	1.7
10:51:01 AM	1975	22	21	22	1.7
10:51:02 AM	1975	22	22	22	1.7
10:51:03 AM	1975	22	22	22	1.6
10:51:04 AM	1975	22	21	22	1.5
10:51:05 AM	1975	22	21	22	1.5
10:51:06 AM	1975	22	22	22	1.4
10:51:07 AM	1975	22	22	22	1.4
10:51:08 AM	1975	22	21	22	1.4
10:51:09 AM	1975	22	21	22	1.5
10:51:10 AM	1975	22	21	22	1.5
10:51:11 AM	1975	22	21	22	1.4
10:51:12 AM	1975	22	21	22	1.5
10:51:13 AM	1975	22	22	22	1.6
10:51:14 AM	1975	22	22	22	1.6
Averages ->	**1975**	**21.9**	**21.5**	**21.8**	**1.4**
				Maximum ->	**1.7**

Yarmouth Research and Technology, LLC

Valve Description: 1 1/2 inch Class 800 Newmans Gate Valve **Date:** 12/13/2011

Cycle Number: 500

Bonnet Gasket

Time	Pressure (psig)	Bonnet (deg. C)	Body Temp (deg. C)	Inside Temp (deg. C)	Leakage (PPMv)
9:16:37 AM	1975	22	22	22	2.2
9:16:38 AM	1975	22	22	22	2.3
9:16:39 AM	1975	21	22	22	2.3
9:16:40 AM	1975	22	22	22	2.3
9:16:41 AM	1975	22	21	21	2.3
9:16:41 AM	1975	22	22	22	2.3
9:16:42 AM	1975	22	22	22	2.3
9:16:43 AM	1975	22	22	22	2.4
9:16:44 AM	1975	22	22	22	2.4
9:16:45 AM	1975	22	22	22	2.4
9:16:46 AM	1975	21	22	22	2.4
9:16:47 AM	1975	22	22	22	2.4
9:16:48 AM	1975	22	22	22	2.4
9:16:49 AM	1975	22	22	22	2.4
9:16:50 AM	1975	22	22	22	2.4
9:16:51 AM	1975	21	21	22	2.4
9:16:52 AM	1975	22	22	22	2.4
9:16:53 AM	1975	22	22	22	2.4
9:16:54 AM	1975	22	22	22	2.4
9:16:55 AM	1975	22	22	22	2.4
9:16:56 AM	1975	22	21	22	2.4
9:16:57 AM	1975	21	21	21	2.4
9:16:58 AM	1975	22	22	22	2.4
9:16:59 AM	1975	22	22	22	2.4
9:17:00 AM	1975	22	22	22	2.4
9:17:01 AM	1975	22	22	22	2.4
9:17:02 AM	1975	22	21	22	2.4
9:17:03 AM	1975	21	22	22	2.4
9:17:04 AM	1975	22	22	22	2.4
9:17:05 AM	1975	21	22	22	2.4
9:17:06 AM	1975	22	21	22	2.4
9:17:07 AM	1975	22	21	22	2.4
9:17:08 AM	1975	22	22	21	2.4
9:17:09 AM	1975	21	22	22	2.4
9:17:10 AM	1975	22	21	21	2.4
9:17:11 AM	1975	22	22	21	2.4
9:17:12 AM	1975	22	22	22	2.4
9:17:13 AM	1975	22	22	22	2.4
9:17:14 AM	1975	22	22	22	2.3
9:17:15 AM	1975	22	22	22	2.3
9:17:16 AM	1975	22	22	22	2.4
9:17:17 AM	1975	22	22	22	2.4
9:17:18 AM	1975	22	21	21	2.3
9:17:19 AM	1975	21	21	22	2.4
9:17:20 AM	1975	22	21	22	2.4
9:17:21 AM	1975	22	22	22	2.4
9:17:22 AM	1975	21	22	22	2.3
9:17:23 AM	1975	22	21	22	2.3
9:17:24 AM	1975	22	22	22	2.3
9:17:25 AM	1975	22	22	22	2.3
9:17:26 AM	1975	22	21	22	2.4
9:17:27 AM	1975	22	22	21	2.3
9:17:28 AM	1975	22	22	22	2.3
9:17:29 AM	1975	22	22	22	2.3
9:17:30 AM	1975	22	21	22	2.3
9:17:31 AM	1975	22	22	22	2.3
9:17:32 AM	1975	22	22	21	2.3
9:17:33 AM	1975	22	21	22	2.3
9:17:34 AM	1975	21	22	22	2.3
9:17:35 AM	1975	22	22	21	2.3
Averages ->	**1975**	**21.7**	**21.7**	**21.8**	**2.4**
				Maximum ->	**2.4**

Yarmouth Research and Technology, LLC

Valve Description: 1 1/2 inch Class 800 Newmans Gate Valve **Date:** 12/12/2011

Cycle Number: 250

Leakage Greater than Allowable

Time	Pressure (psig)	Bonnet (deg. C)	Body Temp (deg. C)	Inside Temp (deg. C)	Leakage (PPMv)
11:47:13 AM	1975	21	21	21	3.9E-05
11:47:14 AM	1975	21	21	21	3.9E-05
11:47:15 AM	1975	21	21	21	3.9E-05
11:47:16 AM	1975	21	21	21	3.9E-05
11:47:17 AM	1975	21	21	21	3.9E-05
11:47:18 AM	1975	21	21	21	3.9E-05
11:47:19 AM	1975	21	21	21	3.9E-05
11:47:20 AM	1975	21	21	21	3.9E-05
11:47:21 AM	1975	21	21	21	3.9E-05
11:47:23 AM	1975	21	21	21	3.9E-05
11:47:23 AM	1975	21	21	21	3.9E-05
11:47:24 AM	1975	21	20	21	3.9E-05
11:47:25 AM	1975	21	21	21	3.9E-05
11:47:26 AM	1975	21	21	21	3.9E-05
11:47:27 AM	1975	21	21	21	3.9E-05
11:47:28 AM	1975	21	21	21	3.9E-05
11:47:29 AM	1975	21	21	21	3.9E-05
11:47:30 AM	1975	21	20	21	3.9E-05
11:47:31 AM	1975	21	21	21	3.9E-05
11:47:32 AM	1975	21	21	21	3.9E-05
11:47:33 AM	1975	21	21	21	3.9E-05
11:47:34 AM	1975	22	21	21	3.9E-05
11:47:35 AM	1975	21	21	21	3.9E-05
11:47:36 AM	1975	21	21	21	3.9E-05
11:47:37 AM	1975	21	21	21	3.9E-05
11:47:38 AM	1975	21	21	21	3.9E-05
11:47:39 AM	1975	21	21	21	3.9E-05
11:47:40 AM	1975	21	21	21	3.9E-05
11:47:41 AM	1975	21	21	21	3.9E-05
11:47:42 AM	1975	21	21	21	3.9E-05
11:47:43 AM	1975	21	21	21	3.9E-05
11:47:44 AM	1975	21	21	21	3.9E-05
11:47:45 AM	1975	21	21	21	3.9E-05
11:47:46 AM	1975	21	21	21	3.9E-05
11:47:47 AM	1975	21	21	21	3.9E-05
11:47:48 AM	1975	21	21	21	3.9E-05
11:47:49 AM	1975	21	21	21	3.9E-05
11:47:50 AM	1975	21	21	21	3.9E-05
11:47:51 AM	1975	21	21	21	3.9E-05
11:47:52 AM	1975	21	21	21	3.9E-05
11:47:53 AM	1975	21	21	21	3.9E-05
11:47:54 AM	1975	21	21	21	3.9E-05
11:47:55 AM	1975	21	21	21	3.9E-05
11:47:56 AM	1975	21	21	21	3.9E-05
11:47:57 AM	1975	21	21	21	3.9E-05
11:47:58 AM	1975	21	21	21	3.9E-05
11:47:59 AM	1975	21	21	21	3.9E-05
11:48:00 AM	1975	21	21	21	3.9E-05
11:48:01 AM	1975	21	21	21	3.9E-05
11:48:02 AM	1975	21	21	21	3.9E-05
11:48:03 AM	1975	21	21	21	3.9E-05
11:48:04 AM	1975	21	21	21	3.9E-05
11:48:05 AM	1975	21	21	21	3.9E-05
11:48:06 AM	1975	21	21	21	3.9E-05
11:48:07 AM	1975	21	21	21	3.9E-05
11:48:08 AM	1975	21	21	21	3.9E-05
11:48:09 AM	1975	21	21	21	3.9E-05
11:48:10 AM	1975	21	21	21	3.9E-05
11:48:11 AM	1975	21	21	21	3.9E-05
11:48:12 AM	1975	21	21	21	3.9E-05
Averages ->	**1975**	**21.1**	**20.9**	**21.0**	**3.9E-05**
				Maximum ->	**3.9E-05**

ISO 15848-1
Helium Fugitive Emission Test Report

Performed for

Newmans

www.newmansvalves.com

2" Class 150 Gate Valve

Project Number: 208186
Test Date: May 26, 2009

Performed by

YARMOUTH RESEARCH AND TECHNOLOGY

434 Walnut Hill Road
North Yarmouth, ME 04097 USA
(207) 829-5359
info@yarmouthresearch.com
www.yarmouthresearch.com

Yarmouth Research and Technology

Fugitive Emission Test Data Sheet

Customer:	Newmans Inc.	**Date:**	5/26/2009
Contact:	Jim Pease	**Project #:**	208186
Product Description:	2 inch Class 150 OIC Gate Valve		
Product Code:	CV 151-G, Body Material CW6MC, Graphite packing		
Sample Supplied by:	Customer		
Stem Diameter:	20 mm		
Packing Nut Torque:	20 ft-lb		

Test Conditions

Test Standard:	ISO 15848-1	**Test Stand:**	Yarmouth Stand 1
Tightness Class:	CH 3.52e-3 atm cc/sec	**Test Media:**	99% Helium
Endurance Class:	C01 500 Mechanical Cycles		
Temperature Class:	400C 2 Thermal Cycles		
Pressure Class:	ANSI Class 150 275 psig @ Ambient, 94 psig @ 400C		
Testing Method:	Purge for stem seals, sniffing (enclosed area) for bonnet seal		
Mounting Position:	Stem and Bore Horizontal		
Max. Allowable Bonnet Gasket Leakage:	50 PPMv by sniffing method		
Leakage Device:	Pfeiffer SmartTest HLT560		
Cycling Rate:	1 cycle per minute - 2.31 stroke length, 43 rpm speed		

Test Data Summary - Stem Seal

		Stem Seal Leakage Readings - atm cc/sec				*Packing*	*Opening*	*Closing*
Cycle	*Nom.Temp*	*Static*		*Dynamic*		*Retorque*	*Torque*	*Torque*
Number	*(C)*	*Avg.*	*Max.*	*Avg.*	*Max.*	*See Notes*	*(ft-lb)*	*(ft-lb)*
0	20	3.9E-05	1.2E-04	7.2E-05	8.2E-05		10	15
125	20	7.6E-06	7.9E-06	7.9E-06	8.5E-06		8	10
125	400	3.2E-06	3.2E-06	3.2E-06	3.3E-06		8	10
250	400	3.2E-06	3.3E-06	3.4E-06	3.5E-06		8	10
250	20	8.9E-05	1.1E-04	1.1E-04	1.2E-04		8	10
375	20	4.0E-04	4.1E-04	4.0E-04	4.1E-04		8	10
375	400	2.1E-04	2.5E-04	1.0E-03	4.0E-04		8	10
500	400	7.2E-04	7.3E-04	7.5E-04	7.6E-04		8	10
500	20	1.0E-03	1.1E-03	1.1E-03	1.4E-03		8	10
Maximum Leakage:		**1.0E-03**	**1.1E-03**	**1.1E-03**	**1.4E-03**		**10**	**15**
Maximum Allowable:		**3.5E-03**	**3.5E-03**					

Yarmouth Research and Technology

Test Data Summary - Bonnet Seal

Cycle Number	*Nom.Temp (C)*	*Leakage - PPMv*	
		Avg.	*Max.*
0	20	4.4	6.0
500	20	16.4	20.4
Maximum Leakage:		**16.4**	**20.4**
Maximum Allowable:		**500**	**500**

Results

Valve passed requirement of test standard with no packing nut adjustments required

Normal stem wear on stem was observed after test.

Witnessed:

President, Yarmouth Research

STATE OF MAINE
MATTHEW
J
WASIELEWSKI
No. 7437
LICENSED
PROFESSIONAL ENGINEER

Yarmouth Research and Technology

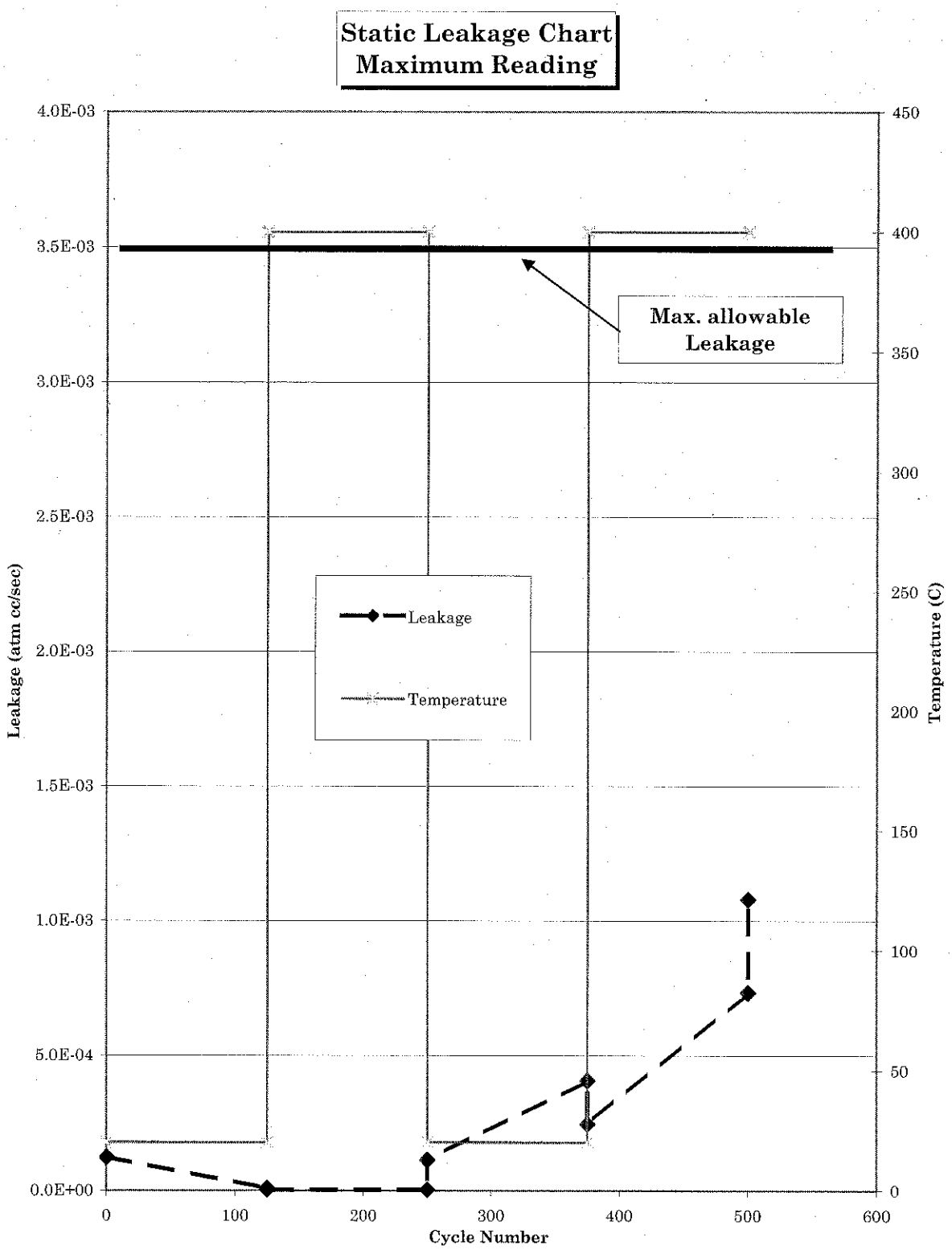

92 East Elm Street, Yarmouth, Maine, 04096 USA
www.yarmouthresearch.com

PHOTOGRAPHS

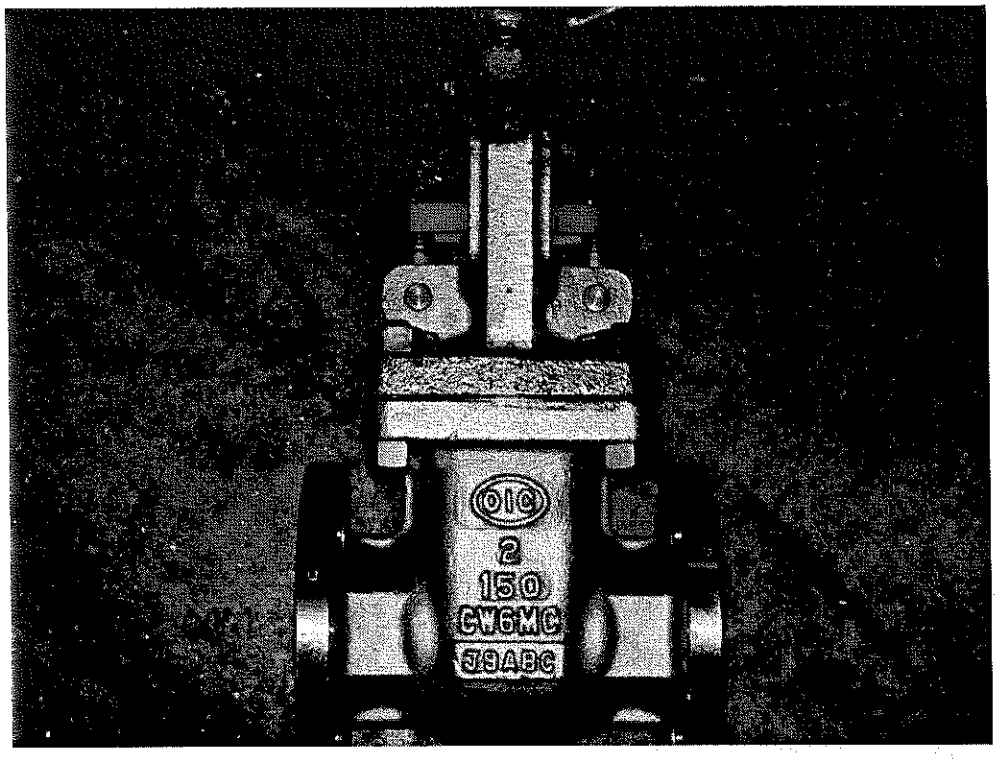

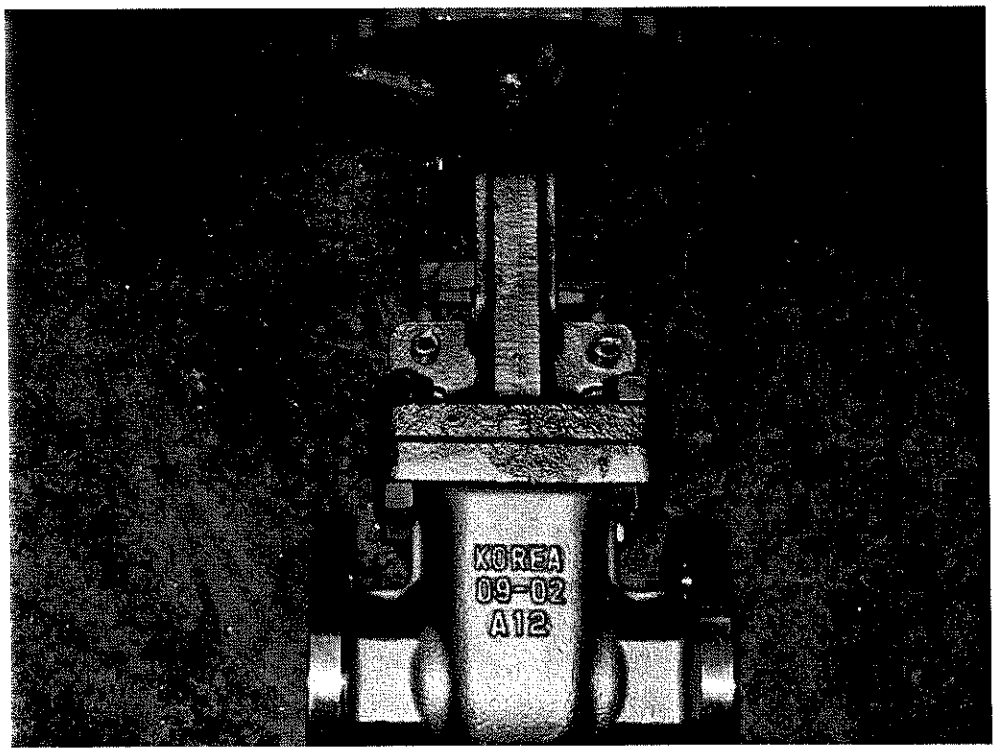

Test Valve (after test)

yrtlab@maine.rr.com
www.yarmouthresearch.com

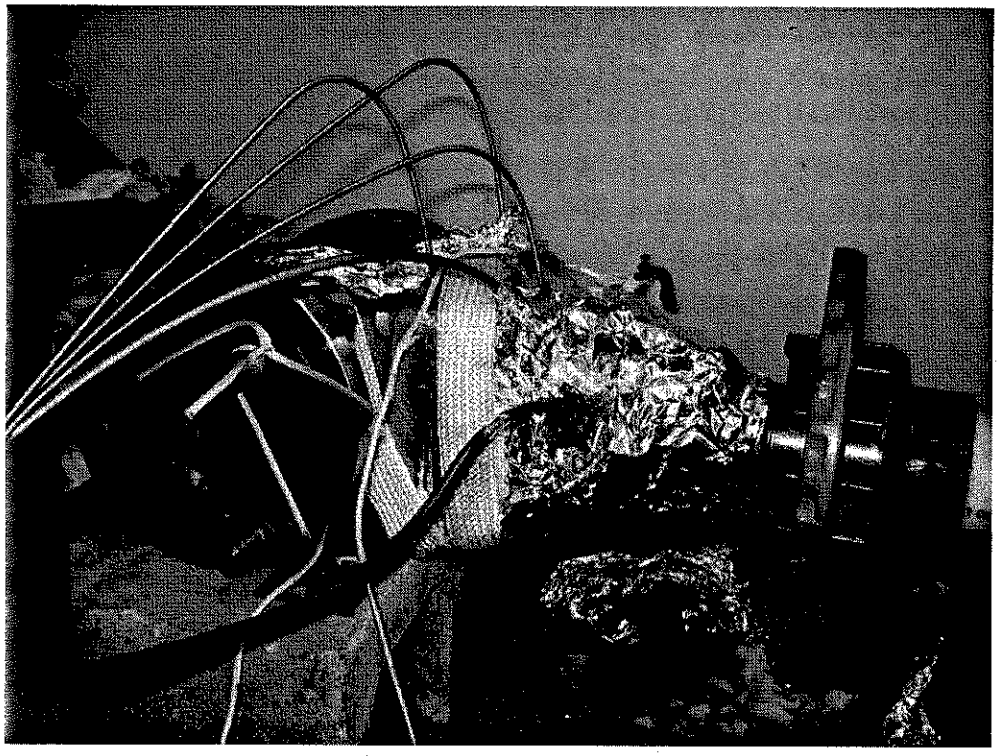

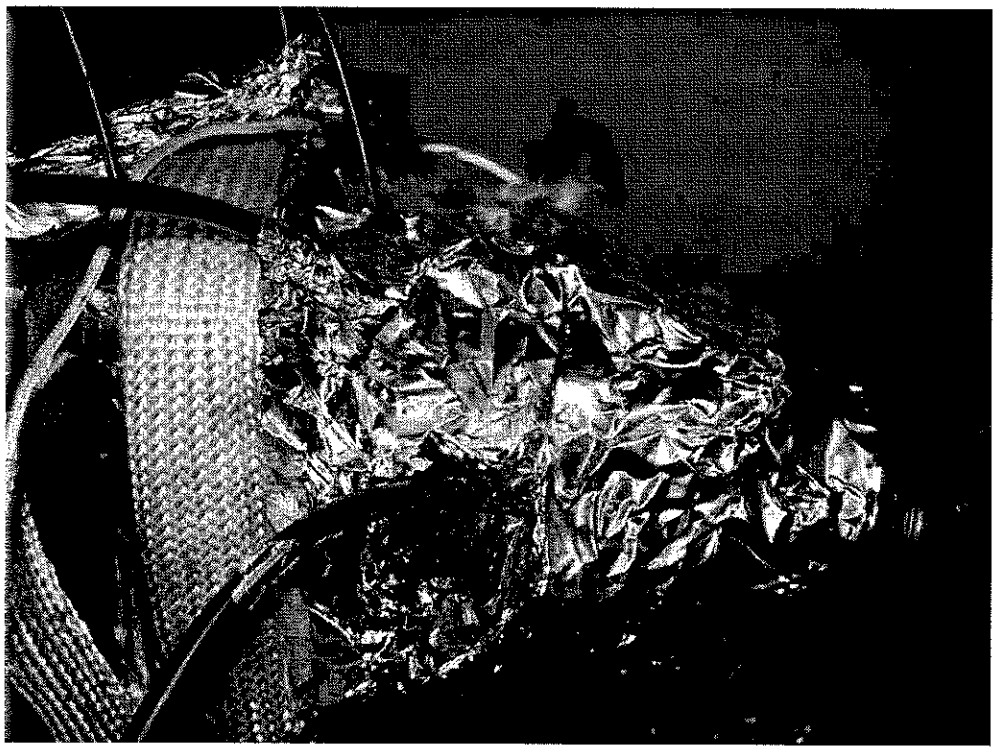

Valve Setup – Leakage measured from enclosed bonnet

Yarmouth Research and Technology

Valve Description: OIC 2 inch Cl150 Gate Valve **Date:** 5/26/2009

Cycle Number: 0

Time	Pressure (psig)	Bonnet (deg. C)	Body Temp (deg. C)	Inside Temp (deg. C)	Leakage (Atm cc/sec)
9:20:49 AM	275	22	21	22	1.2E-04
9:20:50 AM	275	22	21	22	1.2E-04
9:20:51 AM	275	22	21	22	1.2E-04
9:20:52 AM	275	22	21	22	1.2E-04
9:20:53 AM	275	22	22	22	1.2E-04
9:20:54 AM	275	22	22	22	1.1E-04
9:20:55 AM	275	22	22	22	1.1E-04
9:20:56 AM	275	22	22	22	1.0E-04
9:20:57 AM	275	22	21	22	9.2E-05
9:20:58 AM	275	22	22	22	8.1E-05
9:20:59 AM	275	22	22	22	7.0E-05
9:21:00 AM	275	22	22	22	5.9E-05
9:21:01 AM	275	22	22	22	4.8E-05
9:21:02 AM	275	22	22	22	3.9E-05
9:21:03 AM	275	22	21	22	3.2E-05
9:21:04 AM	275	22	22	22	2.5E-05
9:21:05 AM	275	22	22	22	2.1E-05
9:21:06 AM	275	22	22	22	1.8E-05
9:21:07 AM	275	22	21	22	1.5E-05
9:21:08 AM	275	22	22	22	1.4E-05
9:21:09 AM	275	22	22	22	1.3E-05
9:21:10 AM	275	22	22	22	1.3E-05
9:21:11 AM	275	22	22	22	1.3E-05
9:21:12 AM	275	22	22	22	1.3E-05
9:21:13 AM	275	22	22	22	1.4E-05
9:21:14 AM	275	22	22	22	1.4E-05
9:21:15 AM	275	22	22	22	1.5E-05
9:21:16 AM	275	22	22	22	1.6E-05
9:21:17 AM	275	22	22	22	1.7E-05
9:21:18 AM	275	22	22	22	1.8E-05
9:21:19 AM	275	21	22	22	1.9E-05
9:21:20 AM	275	22	22	22	2.0E-05
9:21:21 AM	275	22	22	22	2.0E-05
9:21:22 AM	275	22	22	22	2.0E-05
9:21:23 AM	275	22	22	22	2.0E-05
9:21:24 AM	275	22	22	22	2.0E-05
9:21:25 AM	275	22	21	22	2.1E-05
9:21:26 AM	275	22	21	22	2.1E-05
9:21:27 AM	275	22	22	22	2.1E-05
9:21:28 AM	275	22	22	22	2.1E-05
9:21:29 AM	275	22	22	22	2.2E-05
9:21:30 AM	275	22	21	22	2.2E-05
9:21:31 AM	275	22	21	22	2.2E-05
9:21:32 AM	275	22	22	22	2.3E-05
9:21:33 AM	275	22	22	22	2.3E-05
9:21:34 AM	275	22	22	22	2.4E-05
9:21:35 AM	275	22	21	22	2.4E-05
9:21:36 AM	275	22	21	22	2.6E-05
9:21:37 AM	275	22	22	22	2.6E-05
9:21:38 AM	275	22	22	22	2.7E-05
9:21:39 AM	275	22	22	22	2.7E-05
9:21:40 AM	275	22	21	22	2.8E-05
9:21:41 AM	275	22	22	22	2.8E-05
9:21:42 AM	275	22	22	22	2.9E-05
9:21:43 AM	275	22	22	22	3.0E-05
9:21:44 AM	275	22	22	22	3.1E-05
9:21:45 AM	275	22	22	22	3.1E-05
9:21:46 AM	275	22	22	22	3.2E-05
9:21:47 AM	275	22	21	22	3.3E-05
9:21:48 AM	275	22	22	22	3.3E-05
Averages ->	**275**	**22**	**22**	**22**	**3.9E-05**
				Maximum ->	**1.2E-04**

Yarmouth Research and Technology

Valve Description: OIC 2 inch Cl150 Gate Valve **Date:** 5/26/2009

Cycle Number: 0

Time	Pressure (psig)	Bonnet (deg. C)	Body Temp (deg. C)	Inside Temp (deg. C)	Leakage (Atm cc/sec)
9:22:31 AM	275	22	22	22	6.1E-05
9:22:32 AM	275	22	22	22	6.1E-05
9:22:33 AM	275	22	22	22	6.2E-05
9:22:34 AM	275	22	22	22	6.2E-05
9:22:35 AM	275	22	22	22	6.2E-05
9:22:36 AM	275	22	22	22	6.3E-05
9:22:37 AM	275	22	22	22	6.3E-05
9:22:38 AM	275	22	22	22	6.3E-05
9:22:39 AM	275	22	22	22	6.4E-05
9:22:40 AM	275	22	22	22	6.4E-05
9:22:41 AM	275	22	22	22	6.4E-05
9:22:42 AM	275	22	22	22	6.4E-05
9:22:43 AM	275	22	22	22	6.5E-05
9:22:44 AM	275	22	22	22	6.5E-05
9:22:45 AM	275	22	22	22	6.5E-05
9:22:46 AM	275	22	22	22	6.6E-05
9:22:47 AM	275	22	22	22	6.6E-05
9:22:48 AM	275	22	22	22	6.7E-05
9:22:49 AM	275	22	22	22	6.7E-05
9:22:50 AM	275	22	22	22	6.8E-05
9:22:51 AM	275	22	22	22	6.8E-05
9:22:52 AM	275	22	22	22	6.9E-05
9:22:53 AM	275	22	22	22	6.9E-05
9:22:54 AM	275	22	22	22	7.0E-05
9:22:55 AM	275	22	22	22	7.0E-05
9:22:56 AM	275	22	22	22	7.1E-05
9:22:57 AM	275	22	22	22	7.1E-05
9:22:58 AM	275	22	22	22	7.2E-05
9:22:59 AM	275	22	22	22	7.2E-05
9:23:00 AM	275	22	22	22	7.2E-05
9:23:01 AM	275	22	22	22	7.3E-05
9:23:02 AM	275	22	22	22	7.3E-05
9:23:03 AM	275	22	22	22	7.3E-05
9:23:04 AM	275	22	22	22	7.4E-05
9:23:05 AM	275	22	22	22	7.4E-05
9:23:06 AM	275	22	22	22	7.4E-05
9:23:07 AM	275	22	22	22	7.5E-05
9:23:08 AM	275	22	22	22	7.5E-05
9:23:09 AM	275	22	22	22	7.6E-05
9:23:10 AM	275	22	22	22	7.6E-05
9:23:11 AM	275	22	22	22	7.6E-05
9:23:12 AM	275	22	22	22	7.7E-05
9:23:13 AM	275	22	22	22	7.7E-05
9:23:14 AM	275	22	22	22	7.7E-05
9:23:15 AM	275	22	22	22	7.7E-05
9:23:16 AM	275	22	22	22	7.8E-05
9:23:17 AM	275	22	22	22	7.8E-05
9:23:18 AM	275	22	22	22	7.9E-05
9:23:19 AM	275	22	22	22	7.9E-05
9:23:20 AM	275	22	22	22	7.8E-05
9:23:21 AM	275	22	22	22	7.9E-05
9:23:22 AM	275	22	22	22	8.0E-05
9:23:23 AM	275	22	22	22	7.9E-05
9:23:24 AM	275	22	22	22	8.0E-05
9:23:25 AM	275	22	22	22	8.0E-05
9:23:26 AM	275	22	22	22	8.0E-05
9:23:27 AM	275	22	22	22	8.0E-05
9:23:28 AM	275	22	22	22	8.1E-05
9:23:29 AM	275	22	22	22	8.1E-05
9:23:30 AM	275	22	22	22	8.2E-05
Averages ->	**275**	**22**	**22**	**22**	**7.2E-05**
				Maximum ->	**8.2E-05**

92 East Elm Street, Yarmouth, Maine, 04096 USA
www.yarmouthresearch.com

Yarmouth Research and Technology

Valve Description: OIC 2 inch Cl150 Gate Valve **Date:** 5/26/2009

Cycle Number: 125

Time	Pressure (psig)	Bonnet (deg. C)	Body Temp (deg. C)	Inside Temp (deg. C)	Leakage (Atm cc/sec)
11:36:19 AM	279	34	27	29	7.4E-06
11:36:20 AM	279	34	28	29	7.4E-06
11:36:21 AM	279	34	27	29	7.3E-06
11:36:22 AM	279	34	27	29	7.3E-06
11:36:23 AM	279	34	27	29	7.3E-06
11:36:24 AM	279	34	28	29	7.3E-06
11:36:25 AM	279	34	28	29	7.3E-06
11:36:26 AM	279	34	27	29	7.3E-06
11:36:27 AM	279	34	27	29	7.4E-06
11:36:28 AM	279	34	27	29	7.4E-06
11:36:29 AM	279	34	27	29	7.5E-06
11:36:30 AM	279	34	27	29	7.5E-06
11:36:31 AM	279	34	28	29	7.5E-06
11:36:32 AM	279	34	28	29	7.5E-06
11:36:33 AM	279	34	28	29	7.4E-06
11:36:34 AM	279	34	28	29	7.4E-06
11:36:35 AM	279	34	28	29	7.5E-06
11:36:36 AM	279	34	28	29	7.5E-06
11:36:37 AM	279	34	27	29	7.6E-06
11:36:38 AM	279	34	27	29	7.7E-06
11:36:39 AM	279	34	27	29	7.8E-06
11:36:40 AM	279	34	27	29	7.8E-06
11:36:41 AM	279	34	27	29	7.9E-06
11:36:42 AM	279	34	27	29	7.9E-06
11:36:43 AM	279	34	27	29	7.9E-06
11:36:44 AM	279	34	27	29	7.8E-06
11:36:45 AM	279	34	28	29	7.8E-06
11:36:46 AM	279	34	27	29	7.8E-06
11:36:47 AM	279	34	27	29	7.8E-06
11:36:48 AM	279	34	27	29	7.8E-06
11:36:49 AM	279	34	28	29	7.9E-06
11:36:50 AM	279	34	27	29	7.9E-06
11:36:51 AM	279	34	27	29	7.9E-06
11:36:52 AM	279	34	28	29	7.9E-06
11:36:53 AM	279	34	27	29	7.9E-06
11:36:54 AM	279	34	27	29	7.9E-06
11:36:55 AM	279	34	28	29	7.9E-06
11:36:56 AM	279	34	27	29	7.9E-06
11:36:57 AM	279	34	28	29	7.9E-06
11:36:58 AM	279	34	27	29	7.9E-06
11:36:59 AM	279	34	27	29	7.9E-06
11:37:00 AM	279	34	27	29	7.9E-06
11:37:01 AM	279	34	27	29	7.8E-06
11:37:02 AM	279	34	28	29	7.8E-06
11:37:03 AM	279	34	27	29	7.7E-06
11:37:04 AM	279	34	27	29	7.7E-06
11:37:05 AM	279	34	27	29	7.6E-06
11:37:06 AM	279	34	27	29	7.5E-06
11:37:07 AM	279	34	27	29	7.5E-06
11:37:08 AM	279	34	28	29	7.5E-06
11:37:09 AM	279	34	28	29	7.4E-06
11:37:10 AM	279	34	28	29	7.4E-06
11:37:11 AM	279	34	27	29	7.5E-06
11:37:12 AM	279	33	28	29	7.5E-06
11:37:13 AM	279	34	27	29	7.5E-06
11:37:14 AM	279	34	27	29	7.5E-06
11:37:15 AM	279	34	27	29	7.5E-06
11:37:16 AM	279	34	27	29	7.5E-06
11:37:17 AM	279	34	28	29	7.5E-06
11:37:18 AM	279	34	27	29	7.5E-06
Averages ->	**279**	**34**	**27**	**29**	**7.6E-06**
				Maximum ->	**7.9E-06**

Yarmouth Research and Technology

Valve Description: OIC 2 inch Cl150 Gate Valve **Date:** 5/26/2009

Cycle Number: 125

Time	Pressure (psig)	Bonnet (deg. C)	Body Temp (deg. C)	Inside Temp (deg. C)	Leakage (Atm cc/sec)
11:37:42 AM	279	34	27	29	7.7E-06
11:37:43 AM	279	34	27	29	7.6E-06
11:37:44 AM	279	34	28	29	7.6E-06
11:37:45 AM	279	33	27	29	7.6E-06
11:37:46 AM	279	34	27	29	7.6E-06
11:37:47 AM	279	34	27	29	7.6E-06
11:37:48 AM	279	34	28	29	7.6E-06
11:37:49 AM	279	34	27	29	7.6E-06
11:37:50 AM	279	34	28	29	7.7E-06
11:37:51 AM	279	34	27	29	7.7E-06
11:37:52 AM	279	34	27	29	7.6E-06
11:37:53 AM	279	34	27	29	7.6E-06
11:37:54 AM	279	34	27	29	7.6E-06
11:37:55 AM	279	34	27	29	7.6E-06
11:37:56 AM	279	34	27	29	7.5E-06
11:37:57 AM	279	34	27	29	7.5E-06
11:37:58 AM	279	33	28	29	7.6E-06
11:37:59 AM	279	33	27	29	7.6E-06
11:38:00 AM	279	33	27	29	7.6E-06
11:38:01 AM	279	33	27	29	7.6E-06
11:38:02 AM	279	34	27	29	7.6E-06
11:38:03 AM	279	34	27	29	7.6E-06
11:38:04 AM	279	34	27	29	7.6E-06
11:38:05 AM	279	34	27	29	7.7E-06
11:38:06 AM	279	33	28	29	7.7E-06
11:38:07 AM	279	34	27	29	7.8E-06
11:38:08 AM	279	34	27	29	7.8E-06
11:38:09 AM	279	34	27	29	7.9E-06
11:38:10 AM	279	33	28	29	8.1E-06
11:38:11 AM	279	34	27	29	8.2E-06
11:38:12 AM	279	34	27	29	8.3E-06
11:38:13 AM	279	34	27	29	8.3E-06
11:38:14 AM	279	33	27	29	8.4E-06
11:38:15 AM	279	33	27	29	8.5E-06
11:38:16 AM	279	33	28	29	8.4E-06
11:38:17 AM	279	33	27	29	8.4E-06
11:38:18 AM	279	33	27	29	8.4E-06
11:38:19 AM	279	33	28	29	8.3E-06
11:38:20 AM	279	33	28	29	8.2E-06
11:38:21 AM	279	33	27	29	8.2E-06
11:38:22 AM	279	33	27	29	8.2E-06
11:38:23 AM	279	33	27	29	8.2E-06
11:38:24 AM	279	34	27	29	8.2E-06
11:38:25 AM	279	33	27	29	8.2E-06
11:38:26 AM	279	33	27	29	8.2E-06
11:38:27 AM	279	33	27	29	8.2E-06
11:38:28 AM	279	33	27	29	8.2E-06
11:38:29 AM	279	33	27	29	8.1E-06
11:38:30 AM	279	33	27	29	8.0E-06
11:38:31 AM	279	33	27	29	7.9E-06
11:38:32 AM	279	33	27	29	7.8E-06
11:38:33 AM	279	33	27	29	7.8E-06
11:38:34 AM	279	33	27	29	7.7E-06
11:38:35 AM	279	33	27	29	7.7E-06
11:38:36 AM	279	33	27	29	7.7E-06
11:38:37 AM	279	33	27	29	7.6E-06
11:38:38 AM	279	33	27	29	7.6E-06
11:38:39 AM	279	33	27	29	7.6E-06
11:38:40 AM	279	34	27	29	7.7E-06
11:38:41 AM	279	33	27	29	7.8E-06
Averages ->	**279**	**33**	**27**	**29**	**7.9E-06**
				Maximum ->	**8.5E-06**

Yarmouth Research and Technology

Valve Description: OIC 2 inch Cl150 Gate Valve **Date:** 5/26/2009

Cycle Number: 125

Time	Pressure (psig)	Bonnet (deg. C)	Body Temp (deg. C)	Inside Temp (deg. C)	Leakage (Atm cc/sec)
3:12:10 PM	95	399	408	405	3.1E-06
3:12:11 PM	95	399	408	405	3.2E-06
3:12:12 PM	95	399	408	405	3.1E-06
3:12:13 PM	95	399	408	405	3.2E-06
3:12:14 PM	95	399	408	404	3.2E-06
3:12:15 PM	95	399	408	405	3.2E-06
3:12:16 PM	95	399	408	405	3.2E-06
3:12:17 PM	95	399	408	405	3.1E-06
3:12:18 PM	95	399	408	405	3.1E-06
3:12:19 PM	95	399	408	405	3.1E-06
3:12:20 PM	95	399	408	405	3.1E-06
3:12:21 PM	95	399	408	405	3.1E-06
3:12:22 PM	95	399	408	405	3.1E-06
3:12:23 PM	95	399	409	405	3.1E-06
3:12:24 PM	95	399	408	405	3.1E-06
3:12:25 PM	95	399	408	405	3.1E-06
3:12:26 PM	95	399	409	405	3.2E-06
3:12:27 PM	95	399	408	405	3.2E-06
3:12:28 PM	95	399	408	405	3.1E-06
3:12:29 PM	95	399	409	405	3.2E-06
3:12:30 PM	95	399	408	405	3.2E-06
3:12:31 PM	95	399	408	405	3.2E-06
3:12:32 PM	95	399	408	405	3.2E-06
3:12:33 PM	95	399	409	405	3.2E-06
3:12:34 PM	95	400	408	405	3.2E-06
3:12:35 PM	95	399	409	405	3.2E-06
3:12:36 PM	95	399	409	405	3.2E-06
3:12:37 PM	95	399	409	405	3.2E-06
3:12:38 PM	95	399	408	405	3.2E-06
3:12:39 PM	95	399	408	405	3.2E-06
3:12:40 PM	95	399	408	405	3.2E-06
3:12:41 PM	95	399	409	405	3.2E-06
3:12:42 PM	95	399	409	405	3.2E-06
3:12:43 PM	95	399	409	405	3.2E-06
3:12:44 PM	95	400	409	405	3.2E-06
3:12:45 PM	95	400	409	405	3.2E-06
3:12:46 PM	95	400	409	405	3.2E-06
3:12:47 PM	95	400	409	405	3.2E-06
3:12:48 PM	95	400	409	405	3.2E-06
3:12:49 PM	95	400	409	405	3.2E-06
3:12:50 PM	95	400	409	405	3.2E-06
3:12:51 PM	95	400	409	406	3.2E-06
3:12:52 PM	95	400	409	405	3.2E-06
3:12:53 PM	95	400	409	405	3.2E-06
3:12:54 PM	95	400	409	406	3.2E-06
3:12:55 PM	95	400	409	406	3.2E-06
3:12:56 PM	95	400	409	406	3.2E-06
3:12:57 PM	95	400	409	406	3.2E-06
3:12:58 PM	95	400	409	406	3.2E-06
3:12:59 PM	95	400	409	406	3.2E-06
3:13:00 PM	95	400	409	406	3.2E-06
3:13:01 PM	95	400	409	406	3.2E-06
3:13:02 PM	95	400	409	406	3.2E-06
3:13:03 PM	95	400	409	406	3.2E-06
3:13:04 PM	95	400	409	406	3.2E-06
3:13:05 PM	95	400	409	406	3.2E-06
3:13:06 PM	95	400	409	406	3.2E-06
3:13:07 PM	95	400	409	406	3.2E-06
3:13:08 PM	95	400	409	406	3.2E-06
3:13:09 PM	95	400	409	406	3.2E-06
Averages ->	**95**	**400**	**409**	**405**	**3.2E-06**
				Maximum ->	**3.2E-06**

Yarmouth Research and Technology

Valve Description: OIC 2 inch Cl150 Gate Valve **Date:** 5/26/2009

Cycle Number: 125

Time	Pressure (psig)	Bonnet (deg. C)	Body Temp (deg. C)	Inside Temp (deg. C)	Leakage (Atm cc/sec)
3:13:32 PM	95	400	409	406	3.2E-06
3:13:33 PM	95	400	409	406	3.2E-06
3:13:34 PM	95	400	409	406	3.2E-06
3:13:35 PM	95	400	409	406	3.2E-06
3:13:36 PM	95	400	409	406	3.2E-06
3:13:37 PM	95	400	409	406	3.2E-06
3:13:38 PM	95	400	409	406	3.2E-06
3:13:39 PM	95	400	409	405	3.2E-06
3:13:40 PM	95	400	408	405	3.2E-06
3:13:41 PM	95	400	409	405	3.2E-06
3:13:42 PM	95	400	408	405	3.2E-06
3:13:43 PM	95	400	408	405	3.2E-06
3:13:44 PM	95	400	409	405	3.2E-06
3:13:45 PM	95	399	408	405	3.2E-06
3:13:46 PM	95	400	408	405	3.2E-06
3:13:47 PM	95	399	408	405	3.2E-06
3:13:48 PM	95	399	408	405	3.2E-06
3:13:49 PM	95	399	408	405	3.2E-06
3:13:50 PM	95	399	408	404	3.2E-06
3:13:51 PM	95	399	408	404	3.2E-06
3:13:52 PM	95	399	408	404	3.2E-06
3:13:53 PM	95	399	408	404	3.2E-06
3:13:54 PM	95	399	408	404	3.2E-06
3:13:55 PM	95	399	408	404	3.2E-06
3:13:56 PM	95	399	408	404	3.2E-06
3:13:57 PM	95	399	408	404	3.2E-06
3:13:58 PM	95	399	408	404	3.2E-06
3:13:59 PM	95	399	408	404	3.2E-06
3:14:00 PM	95	399	408	404	3.2E-06
3:14:01 PM	95	399	408	404	3.2E-06
3:14:02 PM	95	399	408	404	3.2E-06
3:14:03 PM	95	399	408	404	3.2E-06
3:14:04 PM	95	399	408	404	3.2E-06
3:14:05 PM	95	399	408	404	3.2E-06
3:14:06 PM	95	399	408	404	3.2E-06
3:14:07 PM	95	399	409	404	3.2E-06
3:14:08 PM	95	399	408	404	3.2E-06
3:14:09 PM	95	399	408	404	3.2E-06
3:14:10 PM	95	399	409	404	3.2E-06
3:14:11 PM	95	399	408	404	3.2E-06
3:14:12 PM	95	399	409	404	3.2E-06
3:14:13 PM	95	399	408	404	3.2E-06
3:14:14 PM	95	399	408	404	3.2E-06
3:14:15 PM	95	399	409	404	3.2E-06
3:14:16 PM	95	399	408	404	3.2E-06
3:14:17 PM	95	399	408	404	3.2E-06
3:14:18 PM	95	399	408	404	3.2E-06
3:14:19 PM	95	399	409	404	3.2E-06
3:14:20 PM	95	399	408	404	3.2E-06
3:14:21 PM	95	399	409	404	3.3E-06
3:14:22 PM	95	399	408	404	3.2E-06
3:14:23 PM	95	399	408	405	3.2E-06
3:14:24 PM	95	399	409	405	3.2E-06
3:14:25 PM	95	399	409	405	3.2E-06
3:14:26 PM	95	399	409	405	3.2E-06
3:14:27 PM	95	399	409	405	3.3E-06
3:14:28 PM	95	399	409	405	3.3E-06
3:14:29 PM	95	399	409	405	3.2E-06
3:14:30 PM	95	399	409	405	3.2E-06
3:14:31 PM	95	399	409	405	3.2E-06
Averages ->	**95**	**399**	**408**	**405**	**3.2E-06**
				Maximum ->	**3.3E-06**

Yarmouth Research and Technology

Valve Description: OIC 2 inch Cl150 Gate Valve **Date:** 5/26/2009

Cycle Number: 250

Time	Pressure (psig)	Bonnet (deg. C)	Body Temp (deg. C)	Inside Temp (deg. C)	Leakage (Atm cc/sec)
5:19:00 PM	99	400	415	408	3.3E-06
5:19:01 PM	99	400	415	408	3.3E-06
5:19:02 PM	99	400	415	408	3.3E-06
5:19:03 PM	99	400	415	408	3.3E-06
5:19:04 PM	99	400	415	408	3.2E-06
5:19:05 PM	99	400	415	408	3.2E-06
5:19:06 PM	99	400	415	408	3.3E-06
5:19:07 PM	99	400	415	408	3.2E-06
5:19:08 PM	99	400	415	408	3.2E-06
5:19:09 PM	99	400	415	408	3.2E-06
5:19:10 PM	99	400	415	408	3.2E-06
5:19:11 PM	99	400	415	408	3.2E-06
5:19:12 PM	99	400	415	408	3.3E-06
5:19:13 PM	99	400	415	408	3.2E-06
5:19:14 PM	99	400	415	408	3.3E-06
5:19:15 PM	99	400	415	408	3.2E-06
5:19:16 PM	99	400	415	408	3.3E-06
5:19:17 PM	99	400	415	408	3.3E-06
5:19:18 PM	99	400	415	408	3.2E-06
5:19:19 PM	99	400	415	408	3.3E-06
5:19:20 PM	99	400	415	408	3.2E-06
5:19:21 PM	99	400	415	408	3.2E-06
5:19:22 PM	99	400	415	408	3.2E-06
5:19:23 PM	99	400	415	408	3.3E-06
5:19:24 PM	99	400	414	407	3.3E-06
5:19:25 PM	99	400	414	407	3.3E-06
5:19:26 PM	99	400	415	407	3.3E-06
5:19:27 PM	99	400	414	407	3.2E-06
5:19:28 PM	99	400	414	407	3.3E-06
5:19:29 PM	99	400	414	407	3.2E-06
5:19:30 PM	99	400	414	407	3.2E-06
5:19:31 PM	99	400	414	407	3.2E-06
5:19:32 PM	99	400	414	406	3.2E-06
5:19:33 PM	99	400	414	406	3.2E-06
5:19:34 PM	99	400	414	406	3.2E-06
5:19:35 PM	99	399	414	406	3.2E-06
5:19:36 PM	99	399	414	406	3.3E-06
5:19:37 PM	99	399	414	406	3.2E-06
5:19:38 PM	99	399	414	406	3.2E-06
5:19:39 PM	99	399	414	406	3.2E-06
5:19:40 PM	99	399	414	405	3.2E-06
5:19:41 PM	99	399	414	405	3.2E-06
5:19:42 PM	99	399	414	405	3.2E-06
5:19:43 PM	99	399	414	405	3.2E-06
5:19:44 PM	99	399	414	405	3.3E-06
5:19:45 PM	99	399	414	405	3.2E-06
5:19:46 PM	99	399	413	405	3.3E-06
5:19:47 PM	99	399	414	405	3.2E-06
5:19:48 PM	99	399	414	405	3.3E-06
5:19:49 PM	99	399	413	405	3.2E-06
5:19:50 PM	99	399	413	405	3.2E-06
5:19:51 PM	99	399	414	405	3.2E-06
5:19:52 PM	99	399	414	405	3.2E-06
5:19:53 PM	99	399	414	405	3.2E-06
5:19:54 PM	99	399	414	405	3.2E-06
5:19:55 PM	99	399	414	405	3.2E-06
5:19:56 PM	99	399	414	405	3.2E-06
5:19:57 PM	99	399	414	405	3.2E-06
5:19:58 PM	99	399	414	405	3.2E-06
5:19:59 PM	99	399	414	405	3.2E-06
Averages ->	**99**	**400**	**414**	**407**	**3.2E-06**
				Maximum ->	**3.3E-06**

Yarmouth Research and Technology

Valve Description: OIC 2 inch Cl150 Gate Valve **Date:** 5/26/2009

Cycle Number: 250

Time	Pressure (psig)	Bonnet (deg. C)	Body Temp (deg. C)	Inside Temp (deg. C)	Leakage (Atm cc/sec)
5:22:33 PM	99	400	414	407	3.5E-06
5:22:34 PM	99	400	415	407	3.4E-06
5:22:35 PM	99	400	415	407	3.5E-06
5:22:36 PM	99	400	415	407	3.5E-06
5:22:37 PM	99	400	415	407	3.4E-06
5:22:38 PM	99	400	415	407	3.5E-06
5:22:39 PM	99	400	415	407	3.4E-06
5:22:40 PM	99	400	415	407	3.4E-06
5:22:41 PM	99	400	415	407	3.4E-06
5:22:42 PM	99	400	415	407	3.5E-06
5:22:43 PM	99	400	415	407	3.5E-06
5:22:44 PM	99	400	415	407	3.4E-06
5:22:45 PM	99	400	415	407	3.5E-06
5:22:46 PM	99	400	415	407	3.5E-06
5:22:47 PM	99	400	415	407	3.4E-06
5:22:48 PM	99	400	415	407	3.4E-06
5:22:49 PM	99	400	415	407	3.4E-06
5:22:50 PM	99	400	415	407	3.4E-06
5:22:51 PM	99	400	415	407	3.4E-06
5:22:52 PM	99	400	415	407	3.4E-06
5:22:53 PM	99	400	415	407	3.4E-06
5:22:54 PM	99	400	415	407	3.4E-06
5:22:55 PM	99	400	415	407	3.4E-06
5:22:56 PM	99	400	415	407	3.4E-06
5:22:57 PM	99	400	415	407	3.4E-06
5:22:58 PM	99	400	415	407	3.4E-06
5:22:59 PM	99	400	414	407	3.4E-06
5:23:00 PM	99	400	414	407	3.4E-06
5:23:01 PM	99	400	414	407	3.4E-06
5:23:02 PM	99	400	414	407	3.4E-06
5:23:03 PM	99	400	414	406	3.4E-06
5:23:04 PM	99	400	414	406	3.4E-06
5:23:05 PM	99	400	414	406	3.4E-06
5:23:06 PM	99	400	414	406	3.4E-06
5:23:07 PM	99	400	414	406	3.5E-06
5:23:08 PM	99	400	414	406	3.5E-06
5:23:09 PM	99	400	414	406	3.5E-06
5:23:10 PM	99	400	414	406	3.5E-06
5:23:11 PM	99	400	414	405	3.5E-06
5:23:12 PM	99	400	414	405	3.5E-06
5:23:13 PM	99	399	414	405	3.5E-06
5:23:14 PM	99	399	414	405	3.5E-06
5:23:15 PM	99	400	414	405	3.4E-06
5:23:16 PM	99	399	414	405	3.5E-06
5:23:17 PM	99	399	414	405	3.5E-06
5:23:18 PM	99	399	414	405	3.5E-06
5:23:19 PM	99	399	414	405	3.4E-06
5:23:20 PM	99	399	414	405	3.5E-06
5:23:21 PM	99	399	414	405	3.5E-06
5:23:22 PM	99	399	414	405	3.4E-06
5:23:23 PM	99	399	414	405	3.5E-06
5:23:24 PM	99	399	414	404	3.5E-06
5:23:25 PM	99	399	414	405	3.4E-06
5:23:26 PM	99	399	414	404	3.4E-06
5:23:27 PM	99	399	414	404	3.4E-06
5:23:28 PM	99	399	414	404	3.4E-06
5:23:29 PM	99	399	414	404	3.4E-06
5:23:30 PM	99	399	414	405	3.4E-06
5:23:31 PM	99	399	414	404	3.4E-06
5:23:32 PM	99	399	414	405	3.4E-06
Averages ->	**99**	**400**	**414**	**406**	**3.4E-06**
				Maximum ->	**3.5E-06**

Yarmouth Research and Technology

Valve Description: OIC 2 inch Cl150 Gate Valve **Date:** 5/27/2009

Cycle Number: 250

Time	Pressure (psig)	Bonnet (deg. C)	Body Temp (deg. C)	Inside Temp (deg. C)	Leakage (Atm cc/sec)
8:35:44 AM	275	24	24	24	9.9E-05
8:35:45 AM	275	24	24	24	9.9E-05
8:35:46 AM	275	24	24	24	1.0E-04
8:35:47 AM	275	24	24	24	1.0E-04
8:35:48 AM	275	24	24	24	1.0E-04
8:35:49 AM	275	24	24	24	1.0E-04
8:35:50 AM	275	24	24	24	1.0E-04
8:35:51 AM	275	24	24	24	1.0E-04
8:35:52 AM	275	24	24	24	1.0E-04
8:35:53 AM	275	24	24	24	1.1E-04
8:35:54 AM	275	24	24	24	1.1E-04
8:35:55 AM	275	24	24	24	1.1E-04
8:35:56 AM	275	24	24	24	1.1E-04
8:35:57 AM	275	24	24	24	1.1E-04
8:35:58 AM	275	24	24	24	1.1E-04
8:35:59 AM	275	24	24	24	1.1E-04
8:36:00 AM	275	24	24	24	1.1E-04
8:36:01 AM	275	24	24	24	1.1E-04
8:36:02 AM	275	24	24	24	1.1E-04
8:36:03 AM	275	24	24	24	1.1E-04
8:36:04 AM	275	24	24	24	1.1E-04
8:36:05 AM	275	24	24	24	1.1E-04
8:36:06 AM	275	24	24	24	1.1E-04
8:36:07 AM	275	24	24	24	1.1E-04
8:36:08 AM	275	24	24	24	1.1E-04
8:36:09 AM	275	24	24	24	1.0E-04
8:36:10 AM	275	24	24	24	1.0E-04
8:36:11 AM	275	24	24	24	9.7E-05
8:36:12 AM	275	24	24	24	9.3E-05
8:36:13 AM	275	24	24	24	8.9E-05
8:36:14 AM	275	24	24	24	8.4E-05
8:36:15 AM	275	24	24	24	8.0E-05
8:36:16 AM	275	24	24	24	7.7E-05
8:36:17 AM	275	24	24	24	7.4E-05
8:36:18 AM	275	24	24	24	7.1E-05
8:36:19 AM	275	24	24	24	7.0E-05
8:36:20 AM	275	24	24	24	6.9E-05
8:36:21 AM	275	24	24	24	6.9E-05
8:36:22 AM	275	24	24	24	6.9E-05
8:36:23 AM	275	24	24	24	7.1E-05
8:36:24 AM	275	24	24	24	7.2E-05
8:36:25 AM	275	24	24	24	7.4E-05
8:36:26 AM	275	24	24	24	7.6E-05
8:36:27 AM	275	24	24	24	7.8E-05
8:36:28 AM	275	24	24	24	7.9E-05
8:36:29 AM	275	24	24	24	8.0E-05
8:36:30 AM	275	24	24	24	8.1E-05
8:36:31 AM	275	24	24	24	8.1E-05
8:36:32 AM	275	24	24	24	8.1E-05
8:36:33 AM	275	24	24	24	8.0E-05
8:36:34 AM	275	24	24	24	7.8E-05
8:36:35 AM	275	24	24	24	7.7E-05
8:36:36 AM	275	24	24	24	7.4E-05
8:36:37 AM	275	24	24	24	7.2E-05
8:36:38 AM	275	24	24	24	6.9E-05
8:36:39 AM	275	24	24	24	6.6E-05
8:36:40 AM	275	24	24	24	6.4E-05
8:36:41 AM	275	24	24	24	6.2E-05
8:36:42 AM	275	24	24	24	6.0E-05
8:36:43 AM	275	24	24	24	5.9E-05
Averages ->	**275**	**24**	**24**	24	**8.9E-05**
				Maximum ->	**1.1E-04**

Yarmouth Research and Technology

Valve Description: OIC 2 inch Cl150 Gate Valve **Date:** 5/27/2009

Cycle Number: 251

Time	Pressure (psig)	Bonnet (deg. C)	Body Temp (deg. C)	Inside Temp (deg. C)	Leakage (Atm cc/sec)
8:38:32 AM	275	24	24	24	1.1E-04
8:38:33 AM	275	24	24	24	1.1E-04
8:38:34 AM	275	24	24	24	1.1E-04
8:38:35 AM	275	24	24	24	1.1E-04
8:38:36 AM	275	24	24	24	1.1E-04
8:38:37 AM	275	24	24	24	1.2E-04
8:38:38 AM	275	24	24	24	1.2E-04
8:38:39 AM	275	24	24	24	1.2E-04
8:38:40 AM	275	24	24	24	1.2E-04
8:38:41 AM	275	24	24	24	1.2E-04
8:38:42 AM	275	24	24	24	1.2E-04
8:38:43 AM	275	24	24	24	1.2E-04
8:38:44 AM	275	24	24	24	1.2E-04
8:38:45 AM	275	24	24	24	1.2E-04
8:38:46 AM	275	24	24	24	1.2E-04
8:38:47 AM	275	24	24	24	1.2E-04
8:38:48 AM	275	24	24	24	1.1E-04
8:38:49 AM	275	24	24	24	1.1E-04
8:38:50 AM	275	24	24	24	1.1E-04
8:38:51 AM	275	24	24	24	1.1E-04
8:38:52 AM	275	24	24	24	1.1E-04
8:38:53 AM	275	24	24	24	1.1E-04
8:38:54 AM	275	24	24	24	1.1E-04
8:38:55 AM	275	24	24	24	1.1E-04
8:38:56 AM	275	24	24	24	1.1E-04
8:38:57 AM	275	24	24	24	1.1E-04
8:38:58 AM	275	24	24	24	1.1E-04
8:38:59 AM	275	24	24	24	1.1E-04
8:39:00 AM	275	24	24	24	1.1E-04
8:39:01 AM	275	24	24	24	1.1E-04
8:39:02 AM	275	24	24	24	1.1E-04
8:39:03 AM	275	24	24	24	1.1E-04
8:39:04 AM	275	24	24	24	1.1E-04
8:39:05 AM	275	24	24	24	1.1E-04
8:39:06 AM	275	24	24	24	1.1E-04
8:39:07 AM	275	24	24	24	1.1E-04
8:39:08 AM	275	24	24	24	1.1E-04
8:39:09 AM	275	24	24	24	1.1E-04
8:39:10 AM	275	24	24	24	1.1E-04
8:39:11 AM	275	24	24	24	1.1E-04
8:39:12 AM	275	24	24	24	1.1E-04
8:39:13 AM	275	24	24	24	1.1E-04
8:39:14 AM	275	24	24	24	1.1E-04
8:39:15 AM	275	24	24	24	1.1E-04
8:39:16 AM	275	24	24	24	1.1E-04
8:39:17 AM	275	24	24	24	1.1E-04
8:39:18 AM	275	24	24	24	1.1E-04
8:39:19 AM	275	24	24	24	1.1E-04
8:39:20 AM	275	24	24	24	1.1E-04
8:39:21 AM	275	24	24	24	1.1E-04
8:39:22 AM	275	24	24	24	1.1E-04
8:39:23 AM	275	24	24	24	1.1E-04
8:39:24 AM	275	24	24	24	1.1E-04
8:39:25 AM	275	24	24	24	1.1E-04
8:39:26 AM	275	24	24	24	1.1E-04
8:39:27 AM	275	24	24	24	1.0E-04
8:39:28 AM	275	24	24	24	1.0E-04
8:39:29 AM	275	24	24	24	9.8E-05
8:39:30 AM	275	24	24	24	9.4E-05
8:39:31 AM	275	24	24	24	9.0E-05
Averages ->	**275**	**24**	**24**	**24**	**1.1E-04**
				Maximum ->	**1.2E-04**

Yarmouth Research and Technology

Valve Description: OIC 2 inch Cl150 Gate Valve **Date:** 5/27/2009

Cycle Number: 375

Time	Pressure (psig)	Bonnet (deg. C)	Body Temp (deg. C)	Inside Temp (deg. C)	Leakage (Atm cc/sec)
12:10:52 PM	275	35	34	34	4.0E-04
12:10:53 PM	275	35	34	34	4.0E-04
12:10:54 PM	275	35	34	34	4.0E-04
12:10:55 PM	275	35	34	34	4.0E-04
12:10:56 PM	275	35	34	34	4.0E-04
12:10:57 PM	275	35	34	34	4.0E-04
12:10:58 PM	275	35	34	34	4.0E-04
12:10:59 PM	275	35	34	34	4.0E-04
12:11:00 PM	275	35	34	34	4.0E-04
12:11:01 PM	275	35	34	34	4.0E-04
12:11:02 PM	275	35	34	34	4.0E-04
12:11:03 PM	275	35	34	34	4.0E-04
12:11:04 PM	275	35	34	34	4.0E-04
12:11:05 PM	275	35	34	34	4.0E-04
12:11:06 PM	275	35	34	34	4.0E-04
12:11:07 PM	275	34	34	34	4.0E-04
12:11:08 PM	275	35	34	34	4.0E-04
12:11:09 PM	275	35	34	34	4.0E-04
12:11:10 PM	275	35	34	34	4.0E-04
12:11:11 PM	275	35	34	34	4.0E-04
12:11:12 PM	275	35	34	34	4.0E-04
12:11:13 PM	275	35	34	34	4.0E-04
12:11:14 PM	275	35	34	34	4.0E-04
12:11:15 PM	275	35	34	34	4.0E-04
12:11:16 PM	275	35	34	34	4.0E-04
12:11:17 PM	275	35	34	34	4.0E-04
12:11:18 PM	275	34	34	34	4.0E-04
12:11:19 PM	275	35	34	34	4.0E-04
12:11:20 PM	275	35	34	34	4.0E-04
12:11:21 PM	275	35	34	34	4.0E-04
12:11:22 PM	275	35	34	34	4.0E-04
12:11:23 PM	275	35	34	34	4.0E-04
12:11:24 PM	275	35	34	34	4.0E-04
12:11:25 PM	275	35	34	34	4.0E-04
12:11:26 PM	275	35	34	34	4.0E-04
12:11:27 PM	275	35	34	34	4.0E-04
12:11:28 PM	275	35	34	34	4.1E-04
12:11:29 PM	275	35	34	34	4.0E-04
12:11:30 PM	275	35	34	34	4.0E-04
12:11:31 PM	275	35	34	34	4.0E-04
12:11:32 PM	275	35	34	34	4.0E-04
12:11:33 PM	275	35	34	34	4.0E-04
12:11:34 PM	275	35	34	34	4.0E-04
12:11:35 PM	275	35	34	34	4.0E-04
12:11:36 PM	275	35	34	34	4.0E-04
12:11:37 PM	275	35	34	34	4.0E-04
12:11:38 PM	275	35	34	34	4.0E-04
12:11:39 PM	275	34	34	34	4.0E-04
12:11:40 PM	275	34	34	34	4.0E-04
12:11:41 PM	275	35	34	34	4.0E-04
12:11:42 PM	275	34	34	34	4.0E-04
12:11:43 PM	275	34	34	34	4.0E-04
12:11:44 PM	275	34	34	34	4.0E-04
12:11:45 PM	275	34	34	34	4.0E-04
12:11:46 PM	275	34	34	34	3.9E-04
12:11:47 PM	275	35	34	34	4.0E-04
12:11:48 PM	275	34	34	34	4.0E-04
12:11:49 PM	275	35	34	34	4.0E-04
12:11:50 PM	275	35	34	34	4.0E-04
12:11:51 PM	275	34	34	34	4.0E-04
Averages ->	**275**	**35**	**34**	**34**	**4.0E-04**
				Maximum ->	**4.1E-04**

Yarmouth Research and Technology

Valve Description: OIC 2 inch Cl150 Gate Valve **Date:** 5/27/2009

Cycle Number: 375

Time	Pressure (psig)	Bonnet (deg. C)	Body Temp (deg. C)	Inside Temp (deg. C)	Leakage (Atm cc/sec)
12:14:36 PM	275	34	33	34	4.0E-04
12:14:37 PM	275	34	33	34	4.0E-04
12:14:38 PM	275	34	33	34	4.0E-04
12:14:39 PM	275	34	33	34	4.1E-04
12:14:40 PM	275	34	33	34	4.0E-04
12:14:41 PM	275	34	33	34	4.0E-04
12:14:42 PM	275	34	33	34	4.1E-04
12:14:43 PM	275	34	33	34	4.0E-04
12:14:44 PM	275	34	33	34	4.0E-04
12:14:45 PM	275	34	33	34	4.0E-04
12:14:46 PM	275	34	33	34	4.0E-04
12:14:47 PM	275	34	33	34	4.0E-04
12:14:48 PM	275	34	33	34	4.0E-04
12:14:49 PM	275	34	33	34	4.0E-04
12:14:50 PM	275	34	33	34	4.0E-04
12:14:51 PM	275	34	33	34	4.0E-04
12:14:52 PM	275	34	33	34	4.0E-04
12:14:53 PM	275	34	33	34	4.0E-04
12:14:54 PM	275	34	33	34	4.0E-04
12:14:55 PM	275	34	33	34	4.0E-04
12:14:56 PM	275	34	33	34	4.0E-04
12:14:57 PM	275	34	33	34	4.0E-04
12:14:58 PM	275	34	33	34	4.0E-04
12:14:59 PM	275	34	33	34	4.0E-04
12:15:00 PM	275	34	33	34	4.0E-04
12:15:01 PM	275	34	33	34	4.0E-04
12:15:02 PM	275	34	33	34	4.0E-04
12:15:03 PM	275	34	33	34	4.0E-04
12:15:04 PM	275	34	33	34	4.0E-04
12:15:05 PM	275	34	33	34	4.0E-04
12:15:06 PM	275	34	33	34	4.0E-04
12:15:07 PM	275	34	33	34	3.9E-04
12:15:08 PM	275	34	33	34	4.0E-04
12:15:09 PM	275	34	33	34	3.9E-04
12:15:10 PM	275	34	33	34	4.0E-04
12:15:11 PM	275	34	33	34	3.9E-04
12:15:12 PM	275	34	33	34	4.0E-04
12:15:13 PM	275	34	33	34	4.0E-04
12:15:14 PM	275	34	33	34	4.0E-04
12:15:15 PM	275	34	33	34	4.0E-04
12:15:16 PM	275	34	34	34	4.0E-04
12:15:17 PM	275	34	33	34	4.0E-04
12:15:18 PM	275	34	33	34	4.0E-04
12:15:19 PM	275	34	33	34	4.0E-04
12:15:20 PM	275	34	33	34	4.0E-04
12:15:21 PM	275	34	33	34	4.0E-04
12:15:22 PM	275	34	33	34	4.0E-04
12:15:23 PM	275	34	33	34	4.0E-04
12:15:24 PM	275	34	33	33	4.0E-04
12:15:25 PM	275	34	33	34	4.0E-04
12:15:26 PM	275	34	33	34	4.0E-04
12:15:27 PM	275	34	33	34	4.0E-04
12:15:28 PM	275	34	33	34	4.0E-04
12:15:29 PM	275	34	33	34	4.0E-04
12:15:30 PM	275	34	33	34	4.0E-04
12:15:31 PM	275	34	33	34	4.0E-04
12:15:32 PM	275	34	33	34	4.0E-04
12:15:33 PM	275	34	33	34	3.9E-04
12:15:34 PM	275	34	33	33	3.9E-04
12:15:35 PM	275	34	33	33	3.9E-04
Averages ->	**275**	**34**	**33**	**34**	**4.0E-04**
				Maximum ->	**4.1E-04**

Yarmouth Research and Technology

Valve Description: OIC 2 inch Cl150 Gate Valve **Date:** 5/27/2009

Cycle Number: 0

Time	Pressure (psig)	Bonnet (deg. C)	Body Temp (deg. C)	Inside Temp (deg. C)	Leakage (Atm cc/sec)
3:16:28 PM	96	401	409	410	1.6E-04
3:16:29 PM	96	401	409	410	1.7E-04
3:16:30 PM	96	401	409	410	1.6E-04
3:16:31 PM	96	401	409	410	1.7E-04
3:16:32 PM	96	401	409	410	1.7E-04
3:16:33 PM	96	401	409	410	1.7E-04
3:16:34 PM	96	401	409	410	1.8E-04
3:16:35 PM	96	401	409	410	1.8E-04
3:16:36 PM	96	401	409	410	1.8E-04
3:16:37 PM	96	401	409	410	1.8E-04
3:16:38 PM	96	401	409	410	1.7E-04
3:16:39 PM	96	401	409	410	1.8E-04
3:16:40 PM	96	401	409	410	1.8E-04
3:16:41 PM	96	401	409	410	1.9E-04
3:16:42 PM	96	401	409	410	1.9E-04
3:16:43 PM	96	401	409	410	1.9E-04
3:16:44 PM	96	401	409	410	2.0E-04
3:16:45 PM	96	401	409	410	2.0E-04
3:16:46 PM	96	401	409	410	1.9E-04
3:16:47 PM	96	401	409	410	2.0E-04
3:16:48 PM	96	401	409	410	2.0E-04
3:16:49 PM	96	401	409	410	2.1E-04
3:16:50 PM	96	401	409	410	2.0E-04
3:16:51 PM	96	401	409	410	2.0E-04
3:16:52 PM	96	401	409	410	2.1E-04
3:16:53 PM	96	401	409	411	2.1E-04
3:16:54 PM	96	401	409	411	2.0E-04
3:16:55 PM	96	401	409	411	2.1E-04
3:16:56 PM	96	401	409	411	2.1E-04
3:16:57 PM	96	401	410	410	2.1E-04
3:16:58 PM	96	401	409	410	2.2E-04
3:16:59 PM	96	401	409	411	2.1E-04
3:17:00 PM	96	401	409	411	2.1E-04
3:17:01 PM	96	401	410	411	2.2E-04
3:17:02 PM	96	401	410	411	2.2E-04
3:17:03 PM	96	401	409	410	2.2E-04
3:17:04 PM	96	401	409	411	2.3E-04
3:17:05 PM	96	401	410	411	2.2E-04
3:17:06 PM	96	401	410	411	2.2E-04
3:17:07 PM	96	401	409	411	2.2E-04
3:17:08 PM	96	401	409	411	2.3E-04
3:17:09 PM	96	401	409	411	2.3E-04
3:17:10 PM	96	401	409	411	2.3E-04
3:17:11 PM	96	401	410	411	2.3E-04
3:17:12 PM	96	401	410	411	2.3E-04
3:17:13 PM	96	401	410	411	2.3E-04
3:17:14 PM	96	401	410	411	2.3E-04
3:17:15 PM	96	401	409	411	2.3E-04
3:17:16 PM	96	401	410	411	2.3E-04
3:17:17 PM	96	401	410	411	2.3E-04
3:17:18 PM	96	402	410	411	2.3E-04
3:17:19 PM	96	401	410	411	2.4E-04
3:17:20 PM	96	402	410	411	2.4E-04
3:17:21 PM	96	401	410	411	2.4E-04
3:17:22 PM	96	401	410	411	2.4E-04
3:17:23 PM	96	401	410	411	2.4E-04
3:17:24 PM	96	402	410	411	2.4E-04
3:17:25 PM	96	401	410	411	2.4E-04
3:17:26 PM	96	401	410	411	2.5E-04
3:17:27 PM	96	401	410	411	2.5E-04
Averages ->	**96**	**401**	**409**	**411**	**2.1E-04**
				Maximum ->	**2.5E-04**

Yarmouth Research and Technology

Valve Description: OIC 2 inch Cl150 Gate Valve **Date:** 5/27/2009

Cycle Number: 375

Time	Pressure (psig)	Bonnet (deg. C)	Body Temp (deg. C)	Inside Temp (deg. C)	Leakage (Atm cc/sec)
3:17:56 PM	96	401	409	410	3.9E-04
3:17:57 PM	96	401	409	410	3.9E-04
3:17:58 PM	96	401	409	410	3.9E-04
3:17:59 PM	96	401	409	410	3.9E-04
3:18:00 PM	96	401	409	410	3.9E-04
3:18:01 PM	96	401	409	410	4.0E-04
3:18:02 PM	96	401	409	410	4.0E-04
3:18:03 PM	96	401	409	410	3.9E-04
3:18:04 PM	96	401	409	410	3.9E-04
3:18:05 PM	96	401	409	410	3.9E-04
3:18:06 PM	96	401	409	410	3.9E-04
3:18:07 PM	96	401	409	411	3.9E-04
3:18:08 PM	96	401	409	410	3.9E-04
3:18:09 PM	96	401	409	410	3.9E-04
3:18:10 PM	96	401	409	410	3.8E-04
3:18:11 PM	96	401	409	411	3.9E-04
3:18:12 PM	96	401	409	410	3.9E-04
3:18:13 PM	96	401	409	410	3.9E-04
3:18:14 PM	96	401	409	411	3.9E-04
3:18:15 PM	96	401	409	411	3.8E-04
3:18:16 PM	96	401	409	411	3.8E-04
3:18:17 PM	96	401	409	411	3.8E-04
3:18:18 PM	96	401	409	411	3.9E-04
3:18:19 PM	96	401	409	411	3.9E-04
3:18:20 PM	96	401	409	411	3.9E-04
3:18:21 PM	96	401	409	411	3.9E-04
3:18:22 PM	96	401	409	411	3.9E-04
3:18:23 PM	96	401	409	411	3.8E-04
3:18:24 PM	96	401	409	411	3.9E-04
3:18:25 PM	96	401	409	411	3.9E-04
3:18:26 PM	96	401	409	411	3.9E-04
3:18:27 PM	96	401	409	411	3.9E-04
3:18:28 PM	96	401	409	411	3.9E-04
3:18:29 PM	96	401	409	411	3.9E-04
3:18:30 PM	96	401	409	411	3.9E-04
3:18:31 PM	96	401	409	411	3.9E-04
3:18:32 PM	96	401	409	411	3.9E-04
3:18:33 PM	96	401	409	411	3.9E-04
3:18:34 PM	96	401	409	411	3.9E-04
3:18:35 PM	96	401	409	411	3.9E-04
3:18:36 PM	96	401	409	411	3.9E-04
3:18:37 PM	96	401	409	411	3.9E-04
3:18:38 PM	96	401	409	411	3.9E-04
3:18:39 PM	96	401	409	411	3.9E-04
3:18:40 PM	96	401	409	411	3.9E-04
3:18:41 PM	96	401	409	411	3.9E-04
3:18:42 PM	96	401	409	411	3.9E-04
3:18:43 PM	96	401	409	411	3.9E-04
3:18:44 PM	96	401	409	411	3.9E-04
3:18:45 PM	96	401	409	411	3.9E-04
3:18:46 PM	96	401	409	411	3.9E-04
3:18:47 PM	96	402	409	411	3.9E-04
3:18:48 PM	96	401	409	411	3.9E-04
3:18:49 PM	96	401	409	411	3.9E-04
3:18:50 PM	96	401	409	411	3.9E-04
3:18:51 PM	96	401	409	411	3.9E-04
3:18:52 PM	96	401	409	411	3.9E-04
3:18:53 PM	96	401	409	411	3.9E-04
3:18:54 PM	96	401	409	411	3.9E-04
3:18:55 PM	96	401	409	411	3.9E-04
Averages ->	**96**	**401**	**409**	**411**	**3.9E-04**
				Maximum ->	**4.0E-04**

Yarmouth Research and Technology

Valve Description: OIC 2 inch Cl150 Gate Valve **Date:** 5/27/2009

Cycle Number: 500

Time	Pressure (psig)	Bonnet (deg. C)	Body Temp (deg. C)	Inside Temp (deg. C)	Leakage (Atm cc/sec)
5:27:30 PM	96	395	405	402	7.1E-04
5:27:31 PM	96	395	405	402	7.1E-04
5:27:32 PM	96	395	405	402	7.1E-04
5:27:33 PM	96	395	405	402	7.2E-04
5:27:34 PM	96	395	405	402	7.2E-04
5:27:35 PM	96	395	405	402	7.2E-04
5:27:36 PM	96	395	405	402	7.2E-04
5:27:37 PM	96	395	405	402	7.2E-04
5:27:38 PM	96	395	405	402	7.2E-04
5:27:39 PM	96	395	405	402	7.2E-04
5:27:40 PM	96	395	405	402	7.2E-04
5:27:41 PM	96	395	405	402	7.2E-04
5:27:42 PM	96	395	405	402	7.2E-04
5:27:43 PM	96	395	405	402	7.2E-04
5:27:44 PM	96	395	405	402	7.2E-04
5:27:45 PM	96	395	405	402	7.2E-04
5:27:46 PM	96	395	405	402	7.2E-04
5:27:47 PM	96	395	405	402	7.2E-04
5:27:48 PM	96	395	405	402	7.2E-04
5:27:49 PM	96	395	405	402	7.2E-04
5:27:50 PM	96	395	405	402	7.2E-04
5:27:51 PM	96	395	405	402	7.2E-04
5:27:52 PM	96	395	405	402	7.2E-04
5:27:53 PM	96	395	405	402	7.2E-04
5:27:54 PM	96	395	405	402	7.2E-04
5:27:55 PM	96	395	405	402	7.2E-04
5:27:56 PM	96	395	405	402	7.2E-04
5:27:57 PM	96	395	405	402	7.3E-04
5:27:58 PM	96	395	405	402	7.2E-04
5:27:59 PM	96	395	406	402	7.3E-04
5:28:00 PM	96	395	405	402	7.3E-04
5:28:01 PM	96	395	405	402	7.3E-04
5:28:02 PM	96	395	405	402	7.3E-04
5:28:03 PM	96	395	405	402	7.3E-04
5:28:04 PM	96	395	406	402	7.3E-04
5:28:05 PM	96	395	405	402	7.3E-04
5:28:06 PM	96	395	406	402	7.3E-04
5:28:07 PM	96	395	405	402	7.3E-04
5:28:08 PM	96	395	406	402	7.3E-04
5:28:09 PM	96	395	406	402	7.2E-04
5:28:10 PM	96	395	406	403	7.3E-04
5:28:11 PM	96	395	405	403	7.3E-04
5:28:12 PM	96	395	406	403	7.3E-04
5:28:13 PM	96	395	405	402	7.3E-04
5:28:14 PM	96	395	406	403	7.3E-04
5:28:15 PM	96	395	406	402	7.3E-04
5:28:16 PM	96	395	406	403	7.3E-04
5:28:17 PM	96	395	406	403	7.3E-04
5:28:18 PM	96	395	406	403	7.3E-04
5:28:19 PM	96	395	406	403	7.3E-04
5:28:20 PM	96	395	406	403	7.3E-04
5:28:21 PM	96	395	406	403	7.3E-04
5:28:22 PM	96	395	406	403	7.3E-04
5:28:23 PM	96	395	406	403	7.3E-04
5:28:24 PM	96	395	406	403	7.3E-04
5:28:25 PM	96	395	406	403	7.3E-04
5:28:26 PM	96	395	406	403	7.3E-04
5:28:27 PM	96	395	406	403	7.3E-04
5:28:28 PM	96	395	406	403	7.3E-04
5:28:29 PM	96	395	406	403	7.3E-04
Averages ->	**96**	**395**	**405**	**402**	**7.2E-04**
				Maximum ->	**7.3E-04**

Yarmouth Research and Technology

Valve Description: OIC 2 inch Cl150 Gate Valve **Date:** 5/27/2009

Cycle Number: 500

Time	Pressure (psig)	Bonnet (deg. C)	Body Temp (deg. C)	Inside Temp (deg. C)	Leakage (Atm cc/sec)
5:29:27 PM	96	396	407	403	7.5E-04
5:29:28 PM	96	396	407	403	7.5E-04
5:29:29 PM	96	396	407	403	7.5E-04
5:29:30 PM	96	396	407	404	7.5E-04
5:29:31 PM	96	396	407	404	7.5E-04
5:29:32 PM	96	396	407	403	7.4E-04
5:29:33 PM	96	396	407	403	7.4E-04
5:29:34 PM	96	396	407	403	7.4E-04
5:29:35 PM	96	397	407	404	7.4E-04
5:29:36 PM	96	396	407	404	7.4E-04
5:29:37 PM	96	397	407	403	7.4E-04
5:29:38 PM	96	397	407	404	7.4E-04
5:29:39 PM	96	397	407	404	7.4E-04
5:29:40 PM	96	397	407	403	7.4E-04
5:29:41 PM	96	397	407	404	7.4E-04
5:29:42 PM	96	397	407	404	7.5E-04
5:29:43 PM	96	397	407	404	7.5E-04
5:29:44 PM	96	397	407	404	7.5E-04
5:29:45 PM	96	397	407	404	7.5E-04
5:29:46 PM	96	397	407	404	7.5E-04
5:29:47 PM	96	397	407	404	7.5E-04
5:29:48 PM	96	397	407	404	7.5E-04
5:29:49 PM	96	397	407	404	7.5E-04
5:29:50 PM	96	397	407	404	7.5E-04
5:29:51 PM	96	397	407	404	7.5E-04
5:29:52 PM	96	397	407	404	7.5E-04
5:29:53 PM	96	397	407	404	7.5E-04
5:29:54 PM	96	397	407	404	7.5E-04
5:29:55 PM	96	397	407	404	7.5E-04
5:29:56 PM	96	397	407	404	7.5E-04
5:29:57 PM	96	397	407	404	7.5E-04
5:29:58 PM	96	397	407	404	7.5E-04
5:29:59 PM	96	397	407	404	7.5E-04
5:30:00 PM	96	397	407	404	7.5E-04
5:30:01 PM	96	397	407	404	7.5E-04
5:30:02 PM	96	397	407	404	7.5E-04
5:30:03 PM	96	397	407	404	7.5E-04
5:30:04 PM	96	397	407	404	7.5E-04
5:30:05 PM	96	397	407	404	7.5E-04
5:30:06 PM	96	397	407	404	7.5E-04
5:30:07 PM	96	397	407	404	7.5E-04
5:30:08 PM	96	397	407	404	7.5E-04
5:30:09 PM	96	397	407	404	7.5E-04
5:30:10 PM	96	397	407	404	7.5E-04
5:30:11 PM	96	397	407	404	7.5E-04
5:30:12 PM	96	397	407	404	7.5E-04
5:30:13 PM	96	397	407	404	7.5E-04
5:30:14 PM	96	397	407	404	7.5E-04
5:30:15 PM	96	397	407	404	7.6E-04
5:30:16 PM	96	397	407	404	7.5E-04
5:30:17 PM	96	397	407	404	7.5E-04
5:30:18 PM	96	397	407	404	7.5E-04
5:30:19 PM	96	397	407	404	7.5E-04
5:30:20 PM	96	397	407	404	7.5E-04
5:30:21 PM	96	397	407	404	7.5E-04
5:30:22 PM	96	397	407	404	7.5E-04
5:30:23 PM	96	397	407	404	7.5E-04
5:30:24 PM	96	397	407	404	7.5E-04
5:30:25 PM	96	397	407	404	7.5E-04
5:30:26 PM	96	397	407	404	7.5E-04
Averages ->	**96**	**397**	**407**	**404**	**7.5E-04**
				Maximum ->	**7.6E-04**

Yarmouth Research and Technology

Valve Description: OIC 2 inch Cl150 Gate Valve **Date:** 5/28/2009

Cycle Number: 500

Time	Pressure (psig)	Bonnet (deg. C)	Body Temp (deg. C)	Inside Temp (deg. C)	Leakage (Atm cc/sec)
8:48:26 AM	280	23	23	23	1.1E-03
8:48:27 AM	280	23	23	23	1.1E-03
8:48:28 AM	280	22	22	23	1.1E-03
8:48:29 AM	280	22	23	23	1.1E-03
8:48:30 AM	280	23	22	23	1.1E-03
8:48:31 AM	280	23	23	23	1.1E-03
8:48:32 AM	280	23	22	23	1.1E-03
8:48:33 AM	280	23	23	23	1.1E-03
8:48:34 AM	280	22	23	23	1.1E-03
8:48:35 AM	280	23	23	23	1.1E-03
8:48:36 AM	280	22	22	23	1.0E-03
8:48:37 AM	280	22	23	23	1.0E-03
8:48:38 AM	280	23	23	23	1.0E-03
8:48:39 AM	280	22	23	23	1.0E-03
8:48:40 AM	280	23	23	23	1.0E-03
8:48:41 AM	280	23	23	23	1.0E-03
8:48:42 AM	280	22	23	23	1.0E-03
8:48:43 AM	280	23	23	23	1.0E-03
8:48:44 AM	280	23	23	23	1.0E-03
8:48:45 AM	280	23	23	23	1.0E-03
8:48:46 AM	280	23	22	23	1.0E-03
8:48:47 AM	280	23	23	23	1.0E-03
8:48:48 AM	280	23	23	23	1.0E-03
8:48:49 AM	280	23	23	23	1.0E-03
8:48:50 AM	280	23	23	23	1.0E-03
8:48:51 AM	280	23	23	23	1.0E-03
8:48:52 AM	280	23	22	23	1.0E-03
8:48:53 AM	280	23	23	23	1.0E-03
8:48:54 AM	280	23	23	23	1.0E-03
8:48:55 AM	280	22	23	23	1.0E-03
8:48:56 AM	280	23	23	23	1.0E-03
8:48:57 AM	280	22	23	23	1.0E-03
8:48:58 AM	280	22	23	23	9.9E-04
8:48:59 AM	280	23	23	23	9.9E-04
8:49:00 AM	280	23	23	23	9.9E-04
8:49:01 AM	280	22	23	23	9.9E-04
8:49:02 AM	280	23	23	22	9.8E-04
8:49:03 AM	280	23	22	23	9.8E-04
8:49:04 AM	280	23	23	23	9.8E-04
8:49:05 AM	280	23	23	23	9.7E-04
8:49:06 AM	280	22	22	23	9.7E-04
8:49:07 AM	280	23	23	23	9.7E-04
8:49:08 AM	280	23	22	23	9.7E-04
8:49:09 AM	280	22	23	23	9.7E-04
8:49:10 AM	280	23	23	23	9.6E-04
8:49:11 AM	280	23	23	23	9.6E-04
8:49:12 AM	280	23	22	23	9.6E-04
8:49:13 AM	280	23	23	23	9.6E-04
8:49:14 AM	280	23	22	23	9.6E-04
8:49:15 AM	280	23	23	23	9.6E-04
8:49:16 AM	280	23	22	23	9.6E-04
8:49:17 AM	280	23	23	23	9.5E-04
8:49:18 AM	280	23	23	23	9.5E-04
8:49:19 AM	280	23	22	23	9.5E-04
8:49:20 AM	280	23	23	23	9.4E-04
8:49:21 AM	280	22	23	23	9.4E-04
8:49:22 AM	280	23	22	23	9.4E-04
8:49:23 AM	280	23	23	23	9.4E-04
8:49:24 AM	280	23	23	23	9.3E-04
8:49:25 AM	280	23	22	23	9.3E-04
Averages ->	**280**	**23**	**23**	**23**	**1.0E-03**
				Maximum ->	**1.1E-03**

Yarmouth Research and Technology

Valve Description: OIC 2 inch Cl150 Gate Valve **Date:** 5/28/2009

Cycle Number: 502

Time	Pressure (psig)	Bonnet (deg. C)	Body Temp (deg. C)	Inside Temp (deg. C)	Leakage (Atm cc/sec)
8:52:17 AM	280	23	23	23	8.5E-04
8:52:18 AM	280	23	23	23	8.6E-04
8:52:19 AM	280	23	23	23	8.7E-04
8:52:20 AM	280	23	22	23	8.8E-04
8:52:21 AM	280	23	22	22	8.9E-04
8:52:22 AM	280	23	22	23	9.0E-04
8:52:23 AM	280	23	22	22	9.0E-04
8:52:24 AM	280	23	23	23	9.1E-04
8:52:25 AM	280	23	23	23	9.2E-04
8:52:26 AM	280	23	23	23	9.3E-04
8:52:27 AM	280	23	23	22	9.4E-04
8:52:28 AM	280	23	22	23	9.5E-04
8:52:29 AM	280	23	22	23	9.6E-04
8:52:30 AM	280	23	22	23	9.7E-04
8:52:31 AM	280	23	22	22	9.8E-04
8:52:32 AM	280	23	22	23	9.8E-04
8:52:33 AM	280	23	23	23	9.9E-04
8:52:34 AM	280	23	22	23	1.0E-03
8:52:35 AM	280	23	22	23	1.0E-03
8:52:36 AM	280	23	23	23	1.0E-03
8:52:37 AM	280	23	22	23	1.0E-03
8:52:38 AM	280	23	23	22	1.0E-03
8:52:39 AM	280	23	22	23	1.1E-03
8:52:40 AM	280	23	23	23	1.1E-03
8:52:41 AM	280	23	23	22	1.1E-03
8:52:42 AM	280	23	23	23	1.1E-03
8:52:43 AM	280	23	23	23	1.1E-03
8:52:44 AM	280	23	22	23	1.1E-03
8:52:45 AM	280	23	22	23	1.1E-03
8:52:46 AM	280	23	22	22	1.1E-03
8:52:47 AM	280	23	23	22	1.2E-03
8:52:48 AM	280	23	22	23	1.2E-03
8:52:49 AM	280	23	23	23	1.2E-03
8:52:50 AM	280	23	22	23	1.2E-03
8:52:51 AM	280	23	22	23	1.2E-03
8:52:52 AM	280	23	22	23	1.2E-03
8:52:53 AM	280	23	23	23	1.2E-03
8:52:54 AM	280	23	23	22	1.2E-03
8:52:55 AM	280	23	22	23	1.3E-03
8:52:56 AM	280	23	23	23	1.3E-03
8:52:57 AM	280	23	23	23	1.3E-03
8:52:58 AM	280	23	23	23	1.3E-03
8:52:59 AM	280	23	22	23	1.3E-03
8:53:00 AM	280	23	22	23	1.3E-03
8:53:01 AM	280	23	22	23	1.3E-03
8:53:02 AM	280	23	22	23	1.3E-03
8:53:03 AM	280	23	23	23	1.3E-03
8:53:04 AM	280	23	23	23	1.3E-03
8:53:05 AM	280	23	23	23	1.3E-03
8:53:06 AM	280	23	22	23	1.3E-03
8:53:07 AM	280	23	22	23	1.3E-03
8:53:08 AM	280	23	23	23	1.3E-03
8:53:09 AM	280	23	22	23	1.4E-03
8:53:10 AM	280	23	23	23	1.4E-03
8:53:11 AM	280	23	23	23	1.4E-03
8:53:12 AM	280	23	22	23	1.4E-03
8:53:13 AM	280	23	23	22	1.4E-03
8:53:14 AM	280	23	22	23	1.4E-03
8:53:15 AM	280	23	23	23	1.4E-03
8:53:16 AM	280	23	22	23	1.4E-03
Averages ->	**280**	**23**	**23**	**23**	**1.1E-03**
				Maximum ->	**1.4E-03**

Yarmouth Research and Technology

Valve Description: OIC 2 inch Cl150 Gate Valve **Date:** 5/26/2009

Cycle Number: 0

Bonnet Gasket

Time	Pressure (psig)	Bonnet (deg. C)	Body Temp (deg. C)	Inside Temp (deg. C)	Leakage (PPMv)
9:14:34 AM	275	21	22	22	5.2
9:14:35 AM	275	22	22	22	5.1
9:14:36 AM	275	22	22	22	5.0
9:14:37 AM	275	22	22	22	5.1
9:14:38 AM	275	22	22	22	5.1
9:14:39 AM	275	22	22	22	5.1
9:14:40 AM	275	22	22	22	5.1
9:14:41 AM	275	22	22	22	5.2
9:14:42 AM	275	22	22	22	5.3
9:14:43 AM	275	22	22	22	5.4
9:14:44 AM	275	21	22	22	5.6
9:14:45 AM	275	22	22	22	5.9
9:14:46 AM	275	22	22	22	6.0
9:14:47 AM	275	22	22	22	5.9
9:14:48 AM	275	22	22	22	5.7
9:14:49 AM	275	22	22	22	5.6
9:14:50 AM	275	22	22	22	5.4
9:14:51 AM	275	22	22	22	5.2
9:14:52 AM	275	21	22	22	5.0
9:14:53 AM	275	22	22	22	4.9
9:14:54 AM	275	22	22	22	4.8
9:14:55 AM	275	21	22	22	4.7
9:14:56 AM	275	22	22	22	4.5
9:14:57 AM	275	22	22	22	4.4
9:14:58 AM	275	22	22	22	4.2
9:14:59 AM	275	22	22	22	4.1
9:15:00 AM	275	22	22	22	4.1
9:15:01 AM	275	22	22	22	4.1
9:15:02 AM	275	22	22	22	4.0
9:15:03 AM	275	22	22	22	4.0
9:15:04 AM	275	22	22	22	4.0
9:15:05 AM	275	21	22	22	3.9
9:15:06 AM	275	22	22	22	3.9
9:15:07 AM	275	22	22	22	3.8
9:15:08 AM	275	22	22	22	3.8
9:15:09 AM	275	22	22	22	3.8
9:15:10 AM	275	22	22	22	3.8
9:15:11 AM	275	21	22	22	3.7
9:15:12 AM	275	22	22	22	3.7
9:15:13 AM	275	22	22	22	3.6
9:15:14 AM	275	22	22	22	3.6
9:15:15 AM	275	22	22	22	3.6
9:15:16 AM	275	22	22	22	3.6
9:15:17 AM	275	22	22	22	3.6
9:15:18 AM	275	22	22	22	3.7
9:15:19 AM	275	22	22	22	3.7
9:15:20 AM	275	22	22	22	3.7
9:15:21 AM	275	22	22	22	3.8
9:15:22 AM	275	22	22	22	3.9
9:15:23 AM	275	22	22	22	4.0
9:15:24 AM	275	22	22	22	4.0
9:15:25 AM	275	22	22	22	4.1
9:15:26 AM	275	22	22	22	4.2
9:15:27 AM	275	22	22	22	4.2
9:15:28 AM	275	22	22	22	4.2
9:15:29 AM	275	22	22	22	4.2
9:15:30 AM	275	22	22	22	4.2
9:15:31 AM	275	22	22	22	4.2
9:15:32 AM	275	22	22	22	4.1
9:15:33 AM	275	21	22	22	4.2
Averages ->	**275**	**22**	**22**	**22**	**4.4**
				Maximum ->	**6.0**

Yarmouth Research and Technology

Valve Description: OIC 2 inch Cl150 Gate Valve **Date:** 5/26/2009

Cycle Number: 503

Bonnet Gasket

Time	Pressure (psig)	Bloc FE -Primary (deg. F)	Body Temp (deg. F)	Inside Temp (deg. F)	Leakage (PPMv)
9:22:31 AM	275.0	22.8	22.6	22.7	20.4
9:22:32 AM	275.0	22.8	22.6	22.7	20.2
9:22:33 AM	275.0	22.9	22.5	22.8	20.1
9:22:34 AM	275.0	23.0	22.6	22.7	20.1
9:22:35 AM	275.0	23.0	22.5	22.8	20.0
9:22:36 AM	275.0	23.1	22.4	22.8	19.9
9:22:37 AM	275.0	22.9	22.5	22.9	19.9
9:22:38 AM	275.0	22.9	22.6	22.8	19.9
9:22:39 AM	275.0	22.9	22.6	22.8	19.9
9:22:40 AM	275.0	23.1	22.6	22.6	20.0
9:22:41 AM	275.0	22.9	22.6	22.8	19.9
9:22:42 AM	275.0	22.9	22.5	22.8	19.8
9:22:43 AM	275.0	22.9	22.4	22.8	19.7
9:22:44 AM	275.0	23.0	22.6	22.8	19.7
9:22:45 AM	275.0	23.1	22.6	22.9	19.7
9:22:46 AM	275.0	22.9	22.6	22.7	19.6
9:22:47 AM	275.0	22.9	22.5	22.8	19.6
9:22:48 AM	275.0	22.9	22.6	22.8	19.5
9:22:49 AM	275.0	23.0	22.5	22.6	19.4
9:22:50 AM	275.0	23.0	22.4	22.7	19.3
9:22:51 AM	275.0	23.1	22.6	22.8	19.0
9:22:52 AM	275.0	22.9	22.4	22.9	18.8
9:22:53 AM	275.0	22.9	22.6	22.8	18.9
9:22:54 AM	275.0	22.8	22.5	22.7	18.7
9:22:55 AM	275.0	22.9	22.6	22.5	18.4
9:22:56 AM	275.0	22.9	22.4	22.7	18.0
9:22:57 AM	275.0	22.9	22.5	22.7	17.5
9:22:58 AM	275.0	22.9	22.6	22.8	17.3
9:22:59 AM	275.0	22.8	22.6	22.8	17.1
9:23:00 AM	275.0	23.0	22.3	22.7	16.8
9:23:01 AM	275.0	23.1	22.5	22.7	16.7
9:23:02 AM	275.0	22.8	22.6	22.7	16.5
9:23:03 AM	275.0	22.9	22.4	22.7	16.2
9:23:04 AM	275.0	22.9	22.5	22.7	15.9
9:23:05 AM	275.0	22.8	22.4	22.8	15.2
9:23:06 AM	275.0	22.9	22.5	22.8	14.6
9:23:07 AM	275.0	22.9	22.5	22.8	14.2
9:23:08 AM	275.0	22.9	22.6	22.6	14.1
9:23:09 AM	275.0	22.7	22.6	22.6	14.0
9:23:10 AM	275.0	23.0	22.4	22.8	13.9
9:23:11 AM	275.0	22.8	22.5	22.7	13.9
9:23:12 AM	275.0	23.0	22.5	22.7	13.6
9:23:13 AM	275.0	22.8	22.6	22.6	13.3
9:23:14 AM	275.0	22.9	22.4	22.8	13.0
9:23:15 AM	275.0	22.9	22.6	22.8	12.6
9:23:16 AM	275.0	22.9	22.6	22.7	12.4
9:23:17 AM	275.0	22.9	22.4	22.7	12.5
9:23:18 AM	275.0	22.9	22.6	22.7	12.8
9:23:19 AM	275.0	23.5	698.2	22.7	12.8
9:23:20 AM	275.0	23.1	22.8	22.8	12.6
9:23:21 AM	275.0	23.0	22.7	22.9	12.5
9:23:22 AM	275.0	22.8	22.4	22.9	12.4
9:23:23 AM	275.0	23.0	22.6	22.8	12.2
9:23:24 AM	275.0	23.0	22.5	22.8	12.3
9:23:25 AM	275.0	22.9	22.4	22.6	12.4
9:23:26 AM	275.0	23.1	22.4	22.8	12.4
9:23:27 AM	275.0	23.1	22.5	22.6	12.5
9:23:28 AM	275.0	22.8	22.6	22.7	12.5
9:23:29 AM	275.0	23.1	22.2	22.9	12.4
9:23:30 AM	275.0	22.9	22.5	22.7	12.4
Averages ->	**275.0**	**22.9**	**33.8**	**22.7**	**16.4**
				Maximum ->	**20.4**

Fugitive Emission Test Report

Performed for

Newco Valve LP

www.newmanvalves.com

4 inch Class 300 Gate Valve

with OEM packing
Figure No.: 13F-CB2

Project Number: 20680
Test Start Date: Oct. 23, 2006

Performed by

YARMOUTH RESEARCH AND TECHNOLOGY

92 East Elm Street
Yarmouth, ME 04096 USA
(207) 829-5359
yrtlab@maine.rr.com
www.yarmouthresearch.com

Yarmouth Research and Technology

PROJECT SUMMARY

Customer:	Newco Valves LP	**Start Date:**	23-Oct-06
Contact:	Shuping Chow		
Valve Manufacturer:	Newco Valves LP	**Project #:**	20680
Valve Product Code:	13F-CB2		
Packing Description:	OEM packing -		
	Pillar 6610 die formed flexible graphite packing rings with		
	Pillar 6710 braided graphite with reinforced inconel wire end rings		

Manufacturer's Recommended Packing Torque:	21	ft-lb
Stem Diameter:	1.022	inches
Bore Diameter:	1.526	inches
Number of Handwheel Turns During Cycling:	20.5	(each direction)
Stem Travel During Cycling:	4.1	inches
Cycling Speed:	43	RPM
Cycling Rate:	75	seconds per cycle
Maximum Allowable Leakage:	500	PPMv (stem static)
Maximum Allowable Handwheel Torque:	100	ft-lb (based on 200lb pull force)
Test Pressure:	600	psig
Test Media:	99% Methane	

RESULTS

Reason for Test Completion:	5000 Cycles Completed
Number of Mechanical Cycles Completed:	5000
Number of Thermal Cycles Completed:	10
Number of Packing Adjustments Required:	1

	Stem Seal Leakage Readings (PPMv)				*Opening*	*Closing*
	Static		*Dynamic*		*Torque*	*Torque*
	Avg.	*Max.*	*Avg.*	*Max.*	*(ft-lb)*	*(ft-lb)*
Average:	52	56	45	62	21	32
Maximum:	813	839	335	471	35	45

Witness Matthew J. Wasielewski

STATE OF MAINE
MATTHEW J. WASIELEWSKI #7437
REGISTERED MECHANICAL ENGINEER

92 East Elm Street, Yarmouth, Maine, 04096 USA
www.yarmouthresearch.com

Yarmouth Research and Technology

Customer: Newco Valves LP **Start Date:** 23-Oct-06

Valve Manufacturer: Newco Valves LP **Project #:** 20680

Valve Figure No.: 13F-CB2

Packing Description: OEM packing -
Pillar 6610 die formed flexible graphite packing rings with
Pillar 6710 braided graphite with reinforced inconel wire end rings

Test Results: The average and maximum leakage results shown below were calculated from 60 readings measured during a minute duration. Opening and closing torques are performed against the test pressure. *See data sheets for more detailed information.*

		Stem Seal Leakage Readings (PPMv)				*Packing*	*Opening*	*Closing*
Cycle	*Temp*	*Static*		*Dynamic*		*Retorque*	*Torque*	*Torque*
Number	*(F)*	*Avg.*	*Max.*	*Avg.*	*Max.*	*See Note*	*(ft-lb)*	*(ft-lb)*
0	Ambient	5	8	3	5		30	45
30	145	12	17	15	22	**0**	30	40
31	145	1	2	1	2		35	40
100	320	56	58	57	68		30	45
200	500	61	64	58	62		30	40
300	500	46	49	46	52		25	35
400	320	27	31	24	35		25	35
500	Ambient	13	17	17	20		25	35
600	320	45	51	50	61		25	35
700	500	38	39	46	52		25	35
800	500	43	45	47	71		25	35
900	320	16	16	18	28		25	35
1000	Ambient	13	13	32	44		25	35
1100	320	9	9	19	36		25	35
1200	500	16	18	15	21		25	35
1300	500	11	12	27	64		25	35
1400	320	9	9	12	17		20	30
1500	Ambient	16	16	21	24		20	30
1600	320	14	15	28	61		20	30
1700	500	6	7	6	9		20	30
1800	500	5	5	17	35		20	30
1900	320	6	8	23	36		20	30
2000	Ambient	50	55	115	165		20	30
2100	320	15	16	16	18		20	30
2200	500	12	13	15	17		20	25
2300	500	11	11	11	12		20	25
2400	320	6	7	8	13		20	30
2500	Ambient	66	69	87	140		20	30
2600	320	36	40	30	34		20	30
2700	500	29	32	32	36		20	30

2800	500	16	18	14	17		20	30
2900	320	12	16	14	19		20	30
3000	Ambient	109	114	144	212		20	30
3100	320	52	54	43	45		20	30
3200	500	40	41	39	40		20	30
3300	500	40	42	44	50		20	30
3400	320	28	29	29	32		20	30
3500	Ambient	128	143	121	166		20	30
3600	320	44	50	56	78		15	25
3700	500	26	32	28	33		15	25
3800	500	18	23	24	26		15	25
3900	320	8	9	9	14		15	25
4000	Ambient	322	344	335	471		15	25
4100	320	157	171	164	204		20	30
4200	500	71	79	53	70		20	30
4300	500	53	57	81	101		15	30
4400	320	4	6	15	26		15	30
4500	Ambient	**813**	**839**			**1**	15	30
4500	Ambient	18	34	35	57		20	40
4600	320	43	60	50	71		15	35
4700	500	36	39	50	62		15	35
4800	500	43	45	39	44		15	25
4900	320	12	13	10	16		15	25
5000	Ambient	35	40	89	154		20	30
Averages ->		**52**	**56**	**45**	**62**		**21**	**32**
Maximums ->		**813**	**839**	**335**	**471**		**35**	**45**

Packing Retorque Notes:

	Static Leakage PPMv	***Before Adjustment***				***After Adjustment***		
		Nut Torque		***Opening***	***Closing***	***Nut Torque***		***Gland Height***
		Top	***Bottom***	***Torque***	***Torque***	***Top***	***Bottom***	
0	17	15	15	30	40	21	21	0.356
1	839	18	15	15	30	42	42	0.345
2								

Bonnet Gasket Leakage at Start: (PPMv)	1	***Avg.***	1	***Max.***
Packing Nut Torque at End of Test: (ft-lb)	35	***<-top***	30	***<-bottom***

Test Notes:

The stem threads started to wear after about 100 cycles and some flaking occurred.

The valve operated smoothly throughout the test.

The stem threads became thin by the end of the test, but the valve was still operatable.

Yarmouth Research and Technology

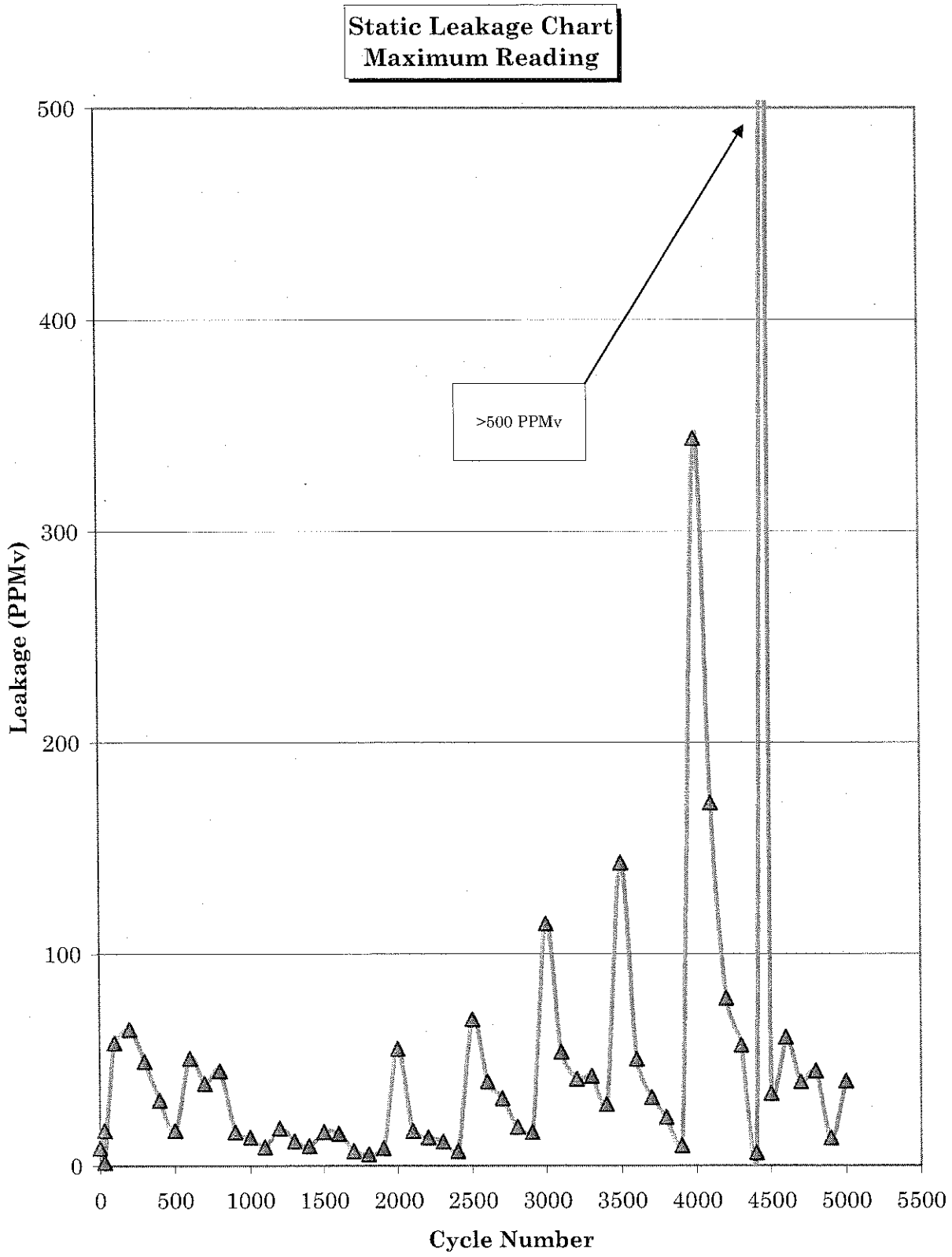

92 East Elm Street, Yarmouth, Maine, 04096 USA
www.yarmouthresearch.com

Yarmouth Research and Technology

DIMENSIONAL INFORMATION

Manufacturer's Information

Valve Manufacturer:	Newco Valves LP
Valve Product Code:	13F-CB2
Test Start Date:	23-Oct-06
Is the stem rising rotating, or rising?:	Rising
Serial Number / Date Code:	See photo
Packing - OEM or Repack:	OEM
Packing Description:	OEM

Initial Packing Torque or Packing Instructions:	21	ft-lb

Pre-Test Information

Gland stud size:	1/2	inches
Gland Stud Threads per inch:	13	
Gland Height as Received:	0.368	inches
Number of Handwheel Turns to Open:	22.5	rev.
Stem Travel:	4.531	inches
Calculated Pitch of Stem Threads:	0.20	inches/rev
Torque on nuts when valve arrived:	14	ft-lb
Gland Height After Retorquing:	0.36	inches
Stem Threads, Yoke and Gland Studs Lubed?:	Yes	
Closing Torque with 0 Pressure After Retorquing:	25	ft-lb
Opening Torque with 0 Pressure After Retorquing:	25	ft-lb
Handwheel Outside Radius:	6.0	inches
Maximum Allowable Handwheel Pull:	200	pounds
Calc'd Maximum Allowable Handwheel Torque:	100	ft-lb

Photographs - Before Testing

Valve As Received:	Yes
Bonnet, Stem, Handwheel, Gland:	Yes
Yoke Mechanism:	Yes

Test Parameters

Actuator Speed:	43	RPM
Number of Handwheel Turns During Cycling:	20.5	
Stroke Length:	4.13	inches
Time to Open Valve:	29	seconds
Time to Close Valve:	29	seconds
Total Time to Complete One Cycle:	75	seconds

Yarmouth Research and Technology

Post Test Measurements

Closing Torque with 0 Pressure:	20	ft-lb
Opening Torque with 0 Pressure:	20	ft-lb
Follower:	0.10	inches
Stem Diameter Above Packing:	1.022	inches
Stem Diameter Center of Packing:	1.022	inches
Stem Circularity (min. Diam):	0.0000	inches
Stem Taper (min. Diam):	0.0000	inches
Stem Side to Side Play:	0.06	inches
Stem Straightness:	0.0000	inches
Stem Surface Finish:	12	Ra
Follower ID:	1.054	inches
Follower OD:	1.518	inches
Follower Height:	0.746	inches
Stuffing Box Diameter:	1.526	inches
Stuffing Box Depth:	2.600	inches
Stuffing Box Finish (estimated w/comparator):	32	Ra
Bottom Bore Diameter:	1.079	inches

Calculations

Clearance Between Bottom Bore and Stem:	0.057	inches
Clearance Between Follower and Stem:	0.032	inches
Clearance Between Follower and Bore:	0.008	inches
Packing Compression As Received:	unknown	*Initial packing height*
After Retorque:	unknown	*not known*
After Hot Torque:	unknown	
After First Adjustment, (if required):	unknown	
At End of Test:	unknown	

Photographs - After Testing

Bonnet, Stem, Handwheel, Gland Assembly:	yes
Yoke Mechanism:	yes
Packing After Removal:	yes
Stem / Gate Interface:	yes
Stem After Removal:	yes
Yoke Components After Disassembly:	yes

PROJECT NOTES and PHOTOGRAPHS

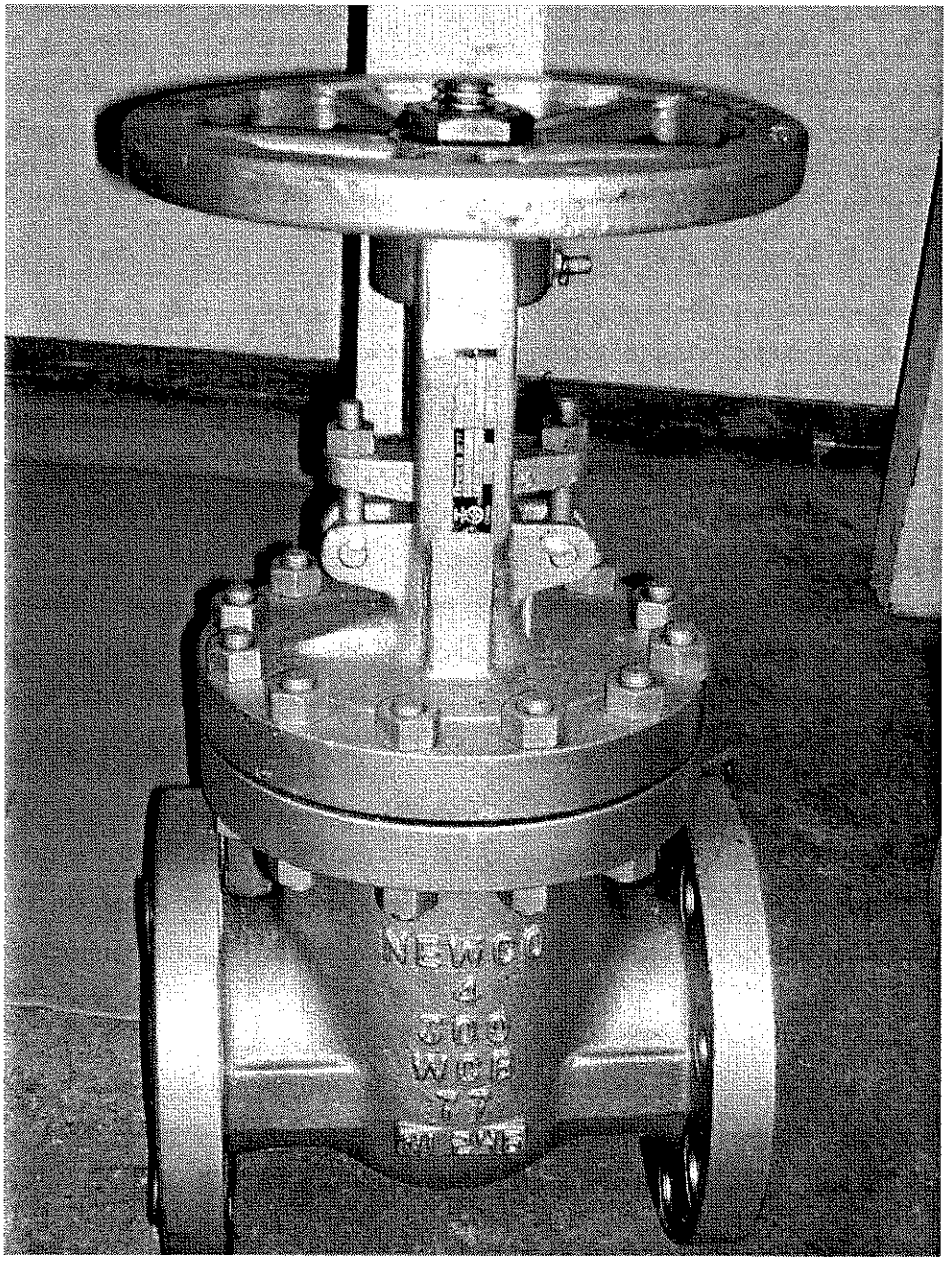

Valve as Received

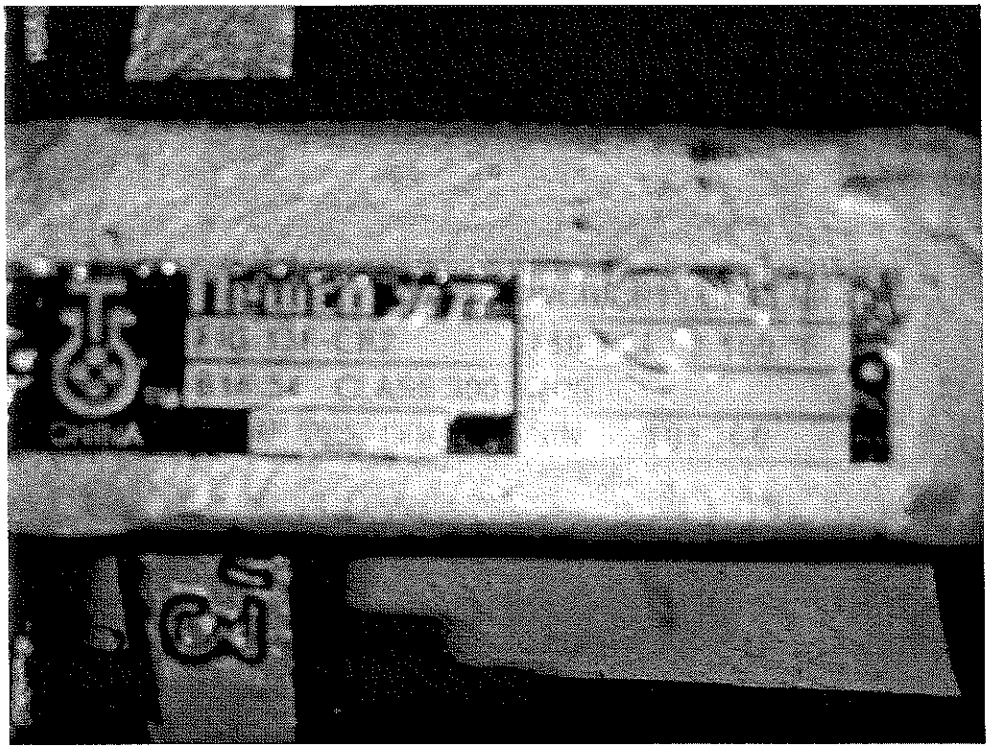

Tag Information

Testing Notes

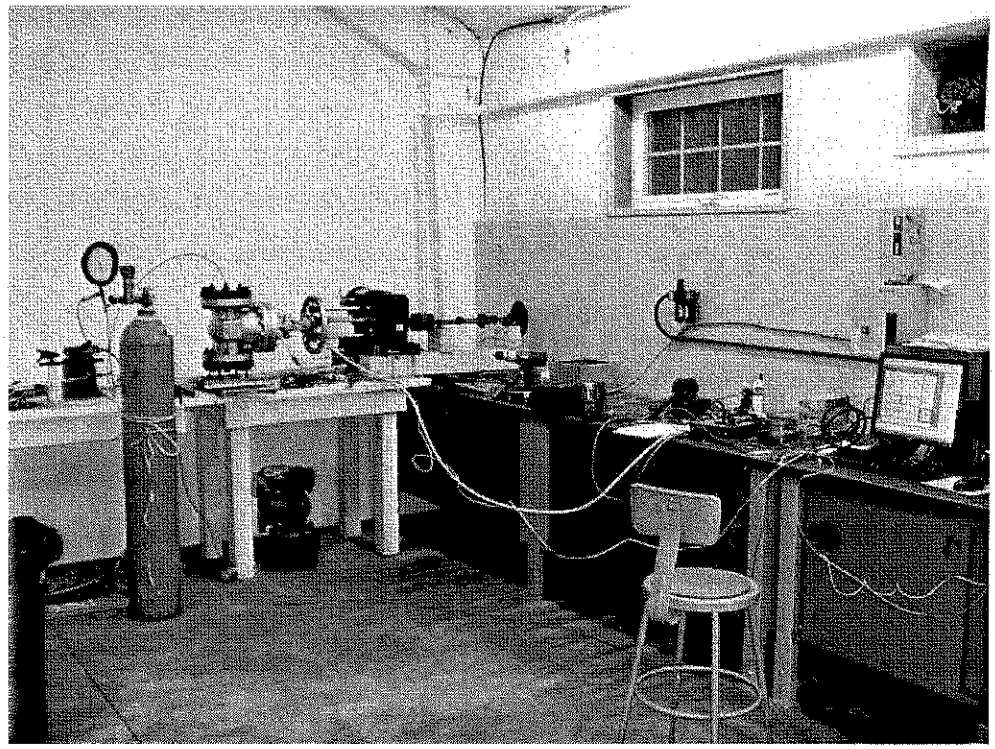

Yarmouth Test Stand

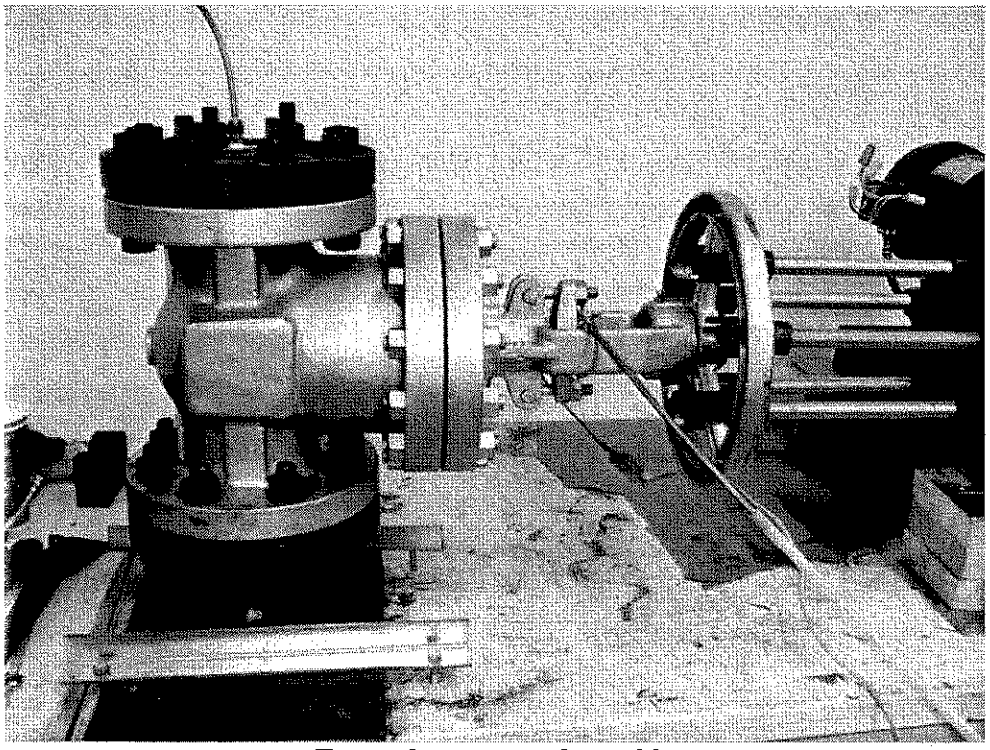

Test valve mounted to table

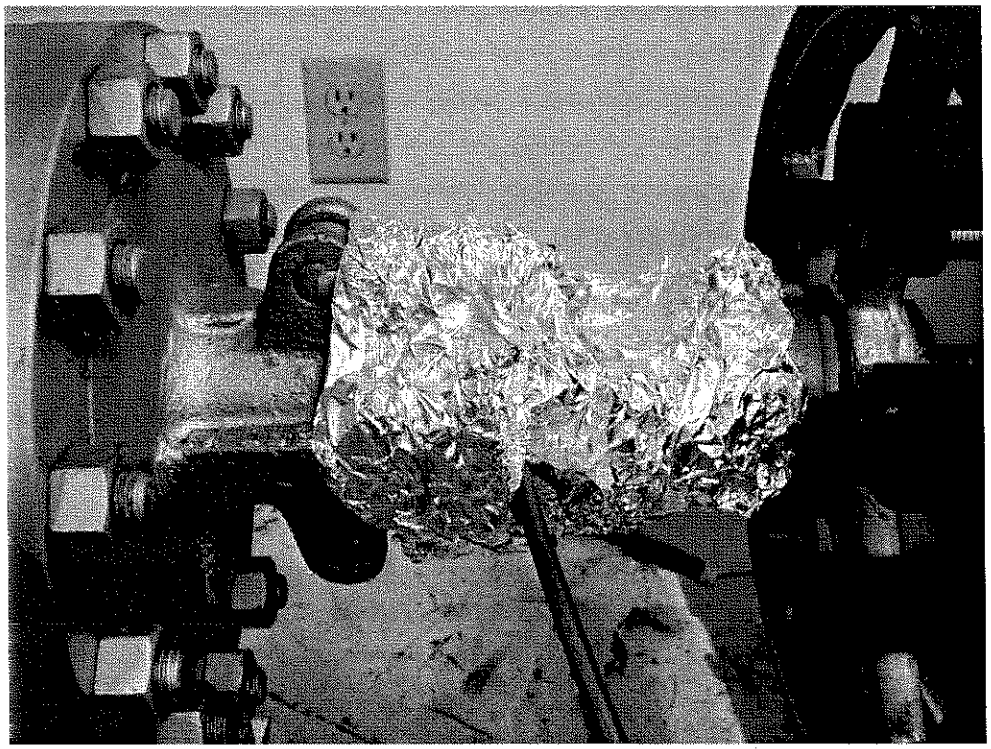

Leakage monitored through tube fixed above stem and enclosed with foil.

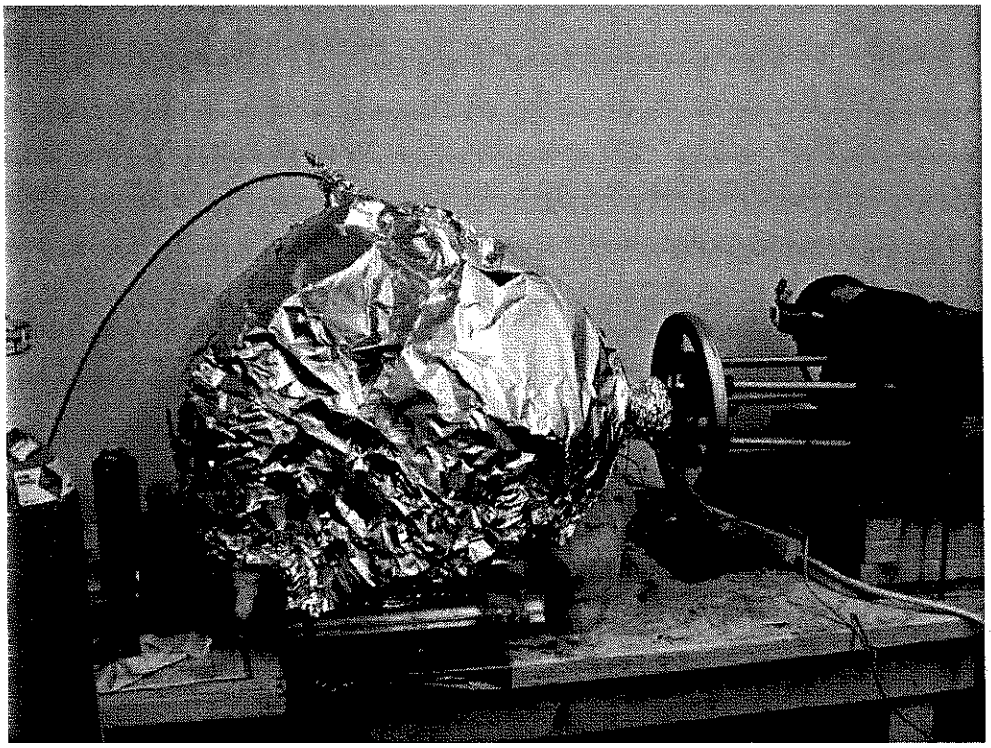

Valve is wrapped with heaters and insulated.

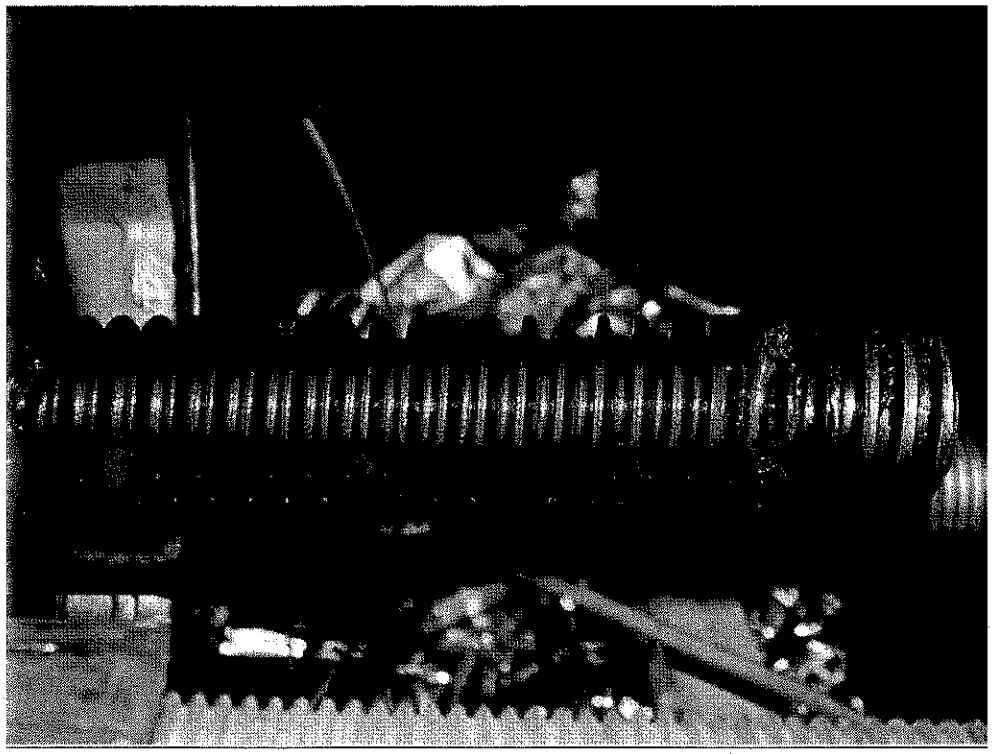

Stem after 500 mechanical cycles

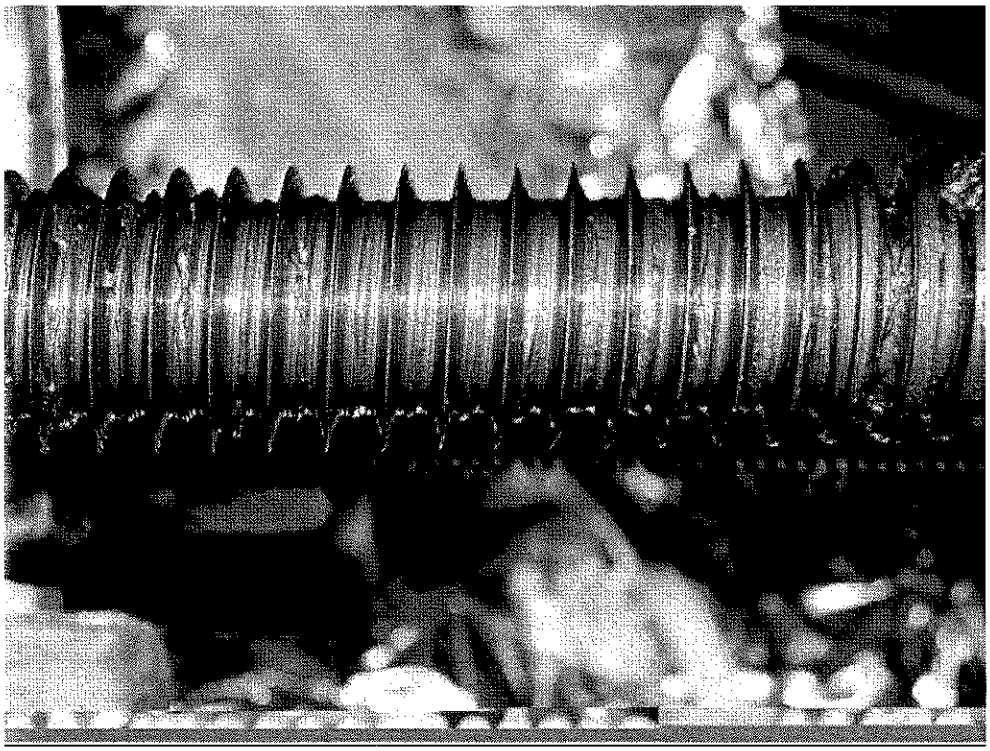

The stem threads started to wear at the start of test, but the valve was able to complete the entire 5000 cycles. The above picture is after about 2500 cycles.

Post-Test Observations

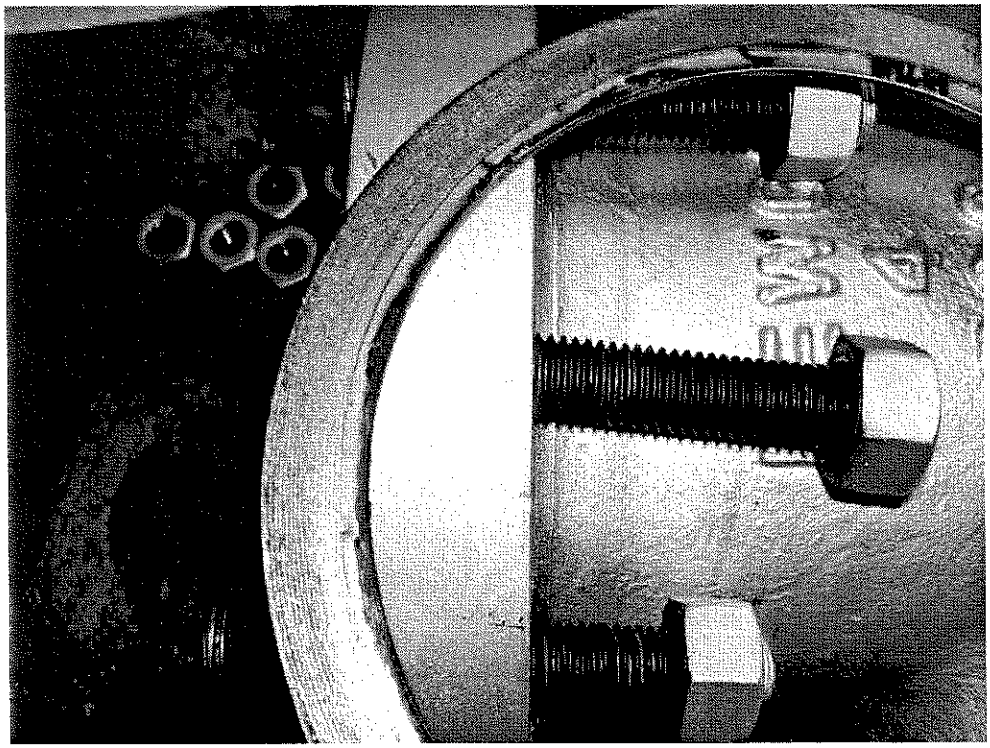

Bonnet spiral-wound gasket

Gland Follower

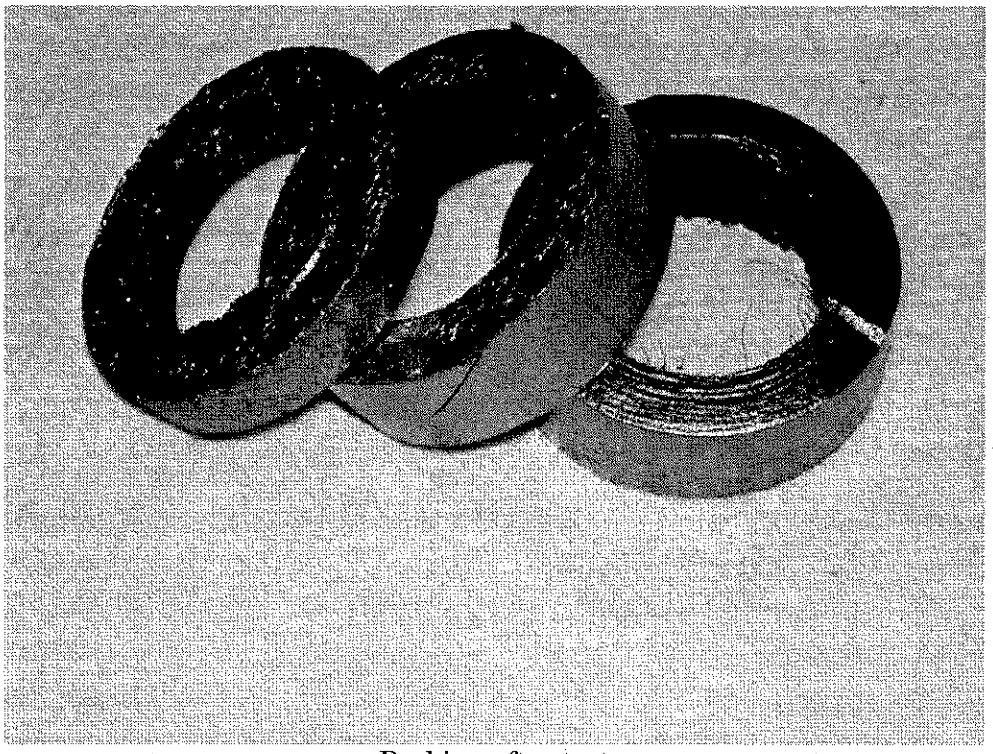

Packing after test

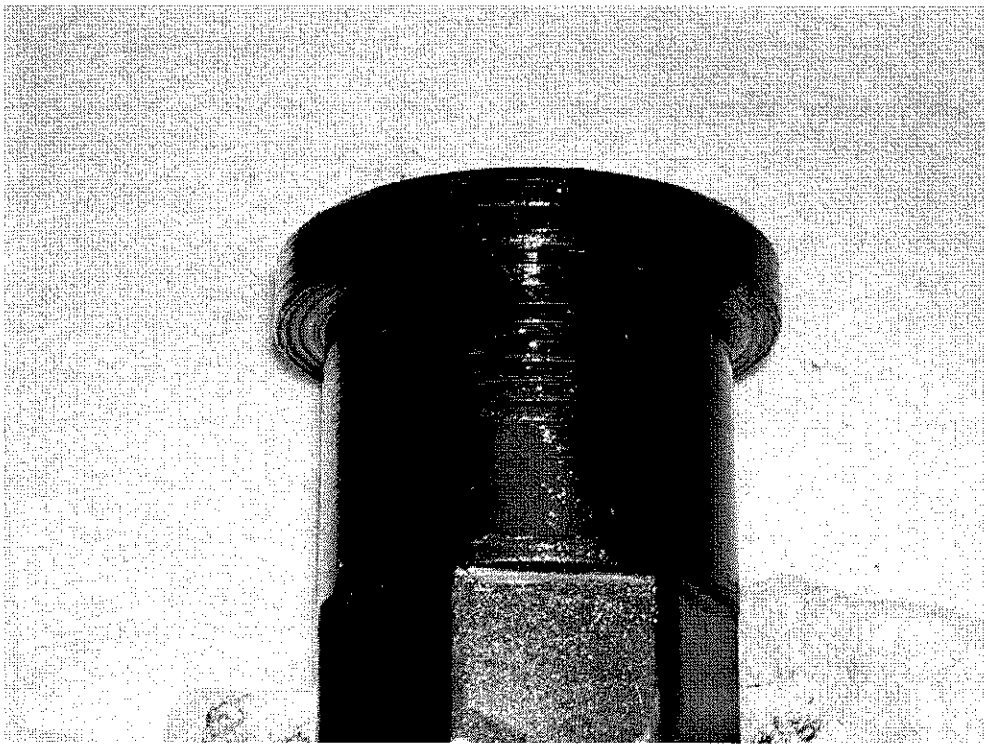

Yoke sleeve was in good condition after the test with very little wear.

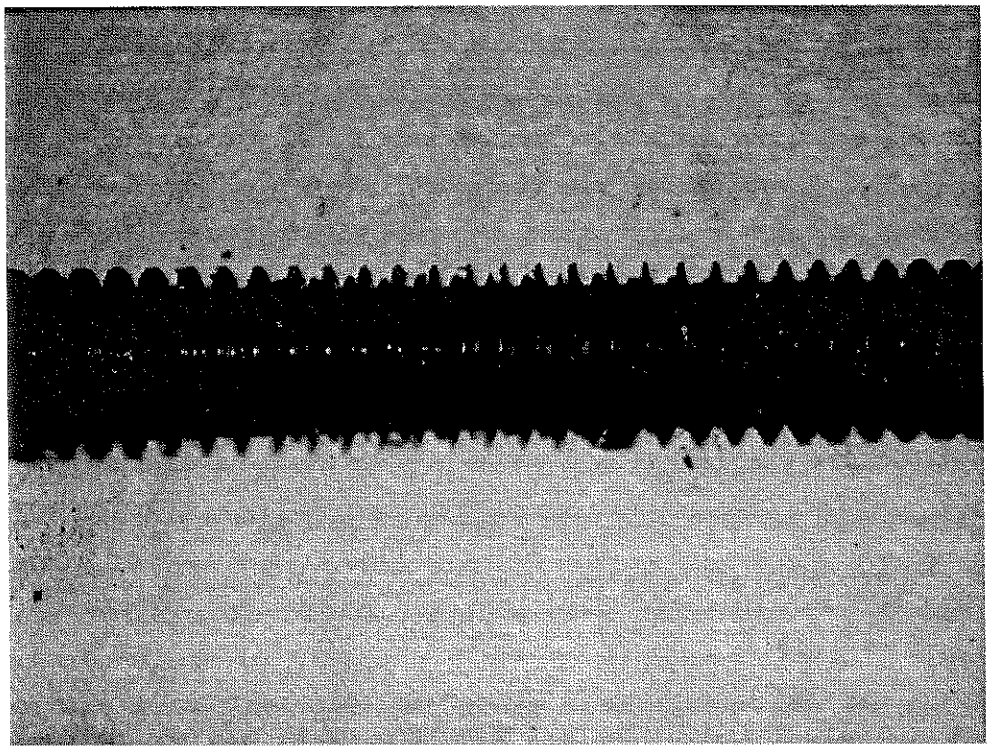

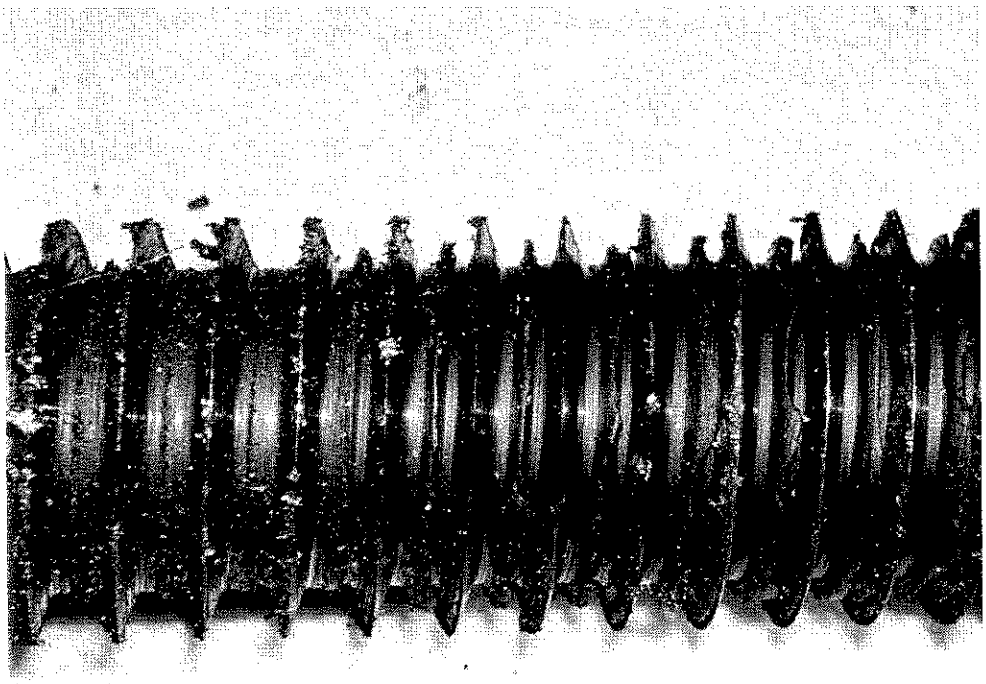

Stem threads after the test.

Yarmouth Research and Technology

Valve Description: Newco 4 inch Cl 300 Gate Valve

Cycle Number: 0 **Date** 10/23/2006

Time	Pressure (psig)	Temp. (deg. F)	Sampling Rate (l/m)	PPMv Reading
9:09:55 AM	598.6	71.0	1.0	5.1
9:09:56 AM	598.7	71.0	1.0	5.2
9:09:57 AM	598.7	71.0	1.0	5.1
9:09:58 AM	598.6	71.0	1.0	4.9
9:09:59 AM	598.6	71.0	1.0	4.6
9:10:00 AM	598.7	71.0	1.0	4.2
9:10:01 AM	598.6	71.0	1.0	4.0
9:10:02 AM	598.7	71.0	1.0	3.9
9:10:03 AM	598.7	71.0	1.0	4.1
9:10:04 AM	598.7	71.0	1.0	4.1
9:10:05 AM	598.6	71.0	1.0	4.4
9:10:06 AM	598.7	71.0	1.0	4.7
9:10:07 AM	598.7	71.0	1.0	4.9
9:10:08 AM	598.7	71.0	1.0	5.0
9:10:09 AM	598.7	71.0	1.0	5.1
9:10:10 AM	598.7	71.0	1.0	5.1
9:10:11 AM	598.6	71.0	1.0	5.1
9:10:12 AM	598.7	71.0	1.0	5.4
9:10:13 AM	598.6	71.0	1.0	5.8
9:10:14 AM	598.6	71.0	1.0	6.2
9:10:15 AM	598.7	71.0	1.0	6.3
9:10:16 AM	598.6	71.0	1.0	6.5
9:10:17 AM	598.7	71.0	1.0	6.7
9:10:18 AM	598.6	71.0	1.0	6.9
9:10:19 AM	598.6	71.0	1.0	7.1
9:10:20 AM	598.6	71.0	1.0	7.3
9:10:21 AM	598.6	71.0	1.0	7.2
9:10:22 AM	598.7	71.0	1.0	7.0
9:10:23 AM	598.6	71.0	1.0	7.0
9:10:24 AM	598.7	71.0	1.0	7.1
9:10:25 AM	598.7	71.0	1.0	7.2
9:10:26 AM	598.7	71.0	1.0	7.4
9:10:27 AM	598.6	71.0	1.0	7.8
9:10:28 AM	598.6	71.0	1.0	8.1
9:10:29 AM	598.7	71.0	1.0	8.3
9:10:30 AM	598.6	71.0	1.0	8.3
9:10:31 AM	598.6	71.0	1.0	8.2
9:10:32 AM	598.6	71.0	1.0	8.1
9:10:33 AM	598.6	71.0	1.0	7.7
9:10:34 AM	598.6	71.0	1.0	7.1
9:10:35 AM	598.7	71.0	1.0	6.5
9:10:36 AM	598.6	71.0	1.0	5.9
9:10:37 AM	598.7	71.0	1.0	5.4
9:10:38 AM	598.6	71.0	1.0	5.0
9:10:39 AM	598.6	71.0	1.0	4.7
9:10:40 AM	598.6	71.0	1.0	4.3
9:10:41 AM	598.7	71.0	1.0	3.9
9:10:42 AM	598.6	71.0	1.0	3.4
9:10:43 AM	598.6	71.0	1.0	3.0
9:10:44 AM	598.7	71.0	1.0	2.6
9:10:45 AM	598.7	71.0	1.0	2.2
9:10:46 AM	598.6	71.0	1.0	1.9
9:10:47 AM	598.7	71.0	1.0	1.7
9:10:48 AM	598.6	71.0	1.0	1.6
9:10:49 AM	598.7	71.0	1.0	1.4
9:10:50 AM	598.7	71.0	1.0	1.2
9:10:51 AM	598.7	71.0	1.0	1.1
9:10:52 AM	598.7	71.0	1.0	1.0
9:10:53 AM	598.7	71.0	1.0	0.9
9:10:54 AM	598.6	71.0	1.0	0.7
Averages ->	**598.6**	**71.0**	**1.0**	**5.0**
			Maximum ->	**8.3**

92 East Elm Street, Yarmouth, Maine, 04096 USA
www.yarmouthresearch.com

Yarmouth Research and Technology

Valve Description: Newco 4 inch Cl 300 Gate Valve

Cycle Number: 0 **Date** 10/23/2006

Time	Pressure (psig)	Temp. (deg. F)	Sampling Rate (l/m)	PPMv Reading
9:15:02 AM	598.5	71.0	1.0	0.9
9:15:03 AM	598.2	71.0	1.0	0.9
9:15:04 AM	597.9	71.0	1.0	1.0
9:15:05 AM	597.7	71.0	1.0	1.2
9:15:06 AM	597.4	71.0	1.0	1.4
9:15:07 AM	597.1	71.0	1.0	1.6
9:15:08 AM	596.8	71.0	1.0	1.8
9:15:09 AM	596.6	71.0	1.0	2.0
9:15:10 AM	596.3	71.0	1.0	2.3
9:15:11 AM	596.0	71.0	1.0	2.5
9:15:12 AM	595.8	71.0	1.0	2.7
9:15:13 AM	595.5	71.0	1.0	2.9
9:15:14 AM	595.3	71.0	1.0	3.1
9:15:15 AM	595.0	71.0	1.0	3.4
9:15:16 AM	594.8	71.0	1.0	3.6
9:15:17 AM	594.5	71.0	1.0	3.9
9:15:17 AM	594.2	71.0	1.0	4.1
9:15:18 AM	594.0	71.0	1.0	4.3
9:15:19 AM	593.8	71.0	1.0	4.3
9:15:20 AM	593.5	71.0	1.0	4.4
9:15:21 AM	593.3	71.0	1.0	4.5
9:15:22 AM	593.0	71.0	1.0	4.6
9:15:23 AM	592.8	72.0	1.0	4.7
9:15:24 AM	592.6	71.0	1.0	4.8
9:15:25 AM	590.7	72.0	1.0	4.9
9:15:26 AM	590.7	72.0	1.0	4.9
9:15:27 AM	592.2	71.0	1.0	5.0
9:15:28 AM	592.2	71.0	1.0	4.9
9:15:29 AM	592.3	71.0	1.0	4.8
9:15:30 AM	592.3	71.0	1.0	4.7
9:15:31 AM	592.3	71.0	1.0	4.5
9:15:32 AM	592.4	71.0	1.0	4.3
9:15:33 AM	592.4	71.0	1.0	4.2
9:15:34 AM	592.4	71.0	1.0	4.0
9:15:35 AM	592.5	72.0	1.0	3.9
9:15:36 AM	592.5	71.0	1.0	3.7
9:15:37 AM	592.5	71.0	1.0	3.5
9:15:38 AM	592.5	71.0	1.0	3.3
9:15:39 AM	592.7	71.0	1.0	3.1
9:15:40 AM	593.0	71.0	1.0	2.9
9:15:41 AM	593.3	72.0	1.0	2.8
9:15:42 AM	593.5	71.0	1.0	2.7
9:15:43 AM	593.9	71.0	1.0	2.7
9:15:44 AM	594.1	71.0	1.0	2.7
9:15:45 AM	594.4	71.0	1.0	2.7
9:15:46 AM	594.7	71.0	1.0	2.7
9:15:47 AM	595.0	71.0	1.0	2.7
9:15:48 AM	595.2	71.0	1.0	2.7
9:15:49 AM	595.5	71.0	1.0	2.7
9:15:50 AM	595.8	72.0	1.0	2.6
9:15:51 AM	596.1	71.0	1.0	2.6
9:15:52 AM	596.3	71.0	1.0	2.5
9:15:53 AM	596.6	71.0	1.0	2.4
9:15:54 AM	596.9	72.0	1.0	2.4
9:15:55 AM	597.1	72.0	1.0	2.3
9:15:56 AM	597.4	71.0	1.0	2.3
9:15:57 AM	597.7	72.0	1.0	2.2
9:15:58 AM	597.9	71.0	1.0	2.1
9:15:59 AM	598.2	72.0	1.0	2.0
9:16:00 AM	598.4	72.0	1.0	1.9
Averages ->	**594.7**	**71.2**	**1.0**	**3.1**
			Maximum ->	**5.0**

Yarmouth Research and Technology

Valve Description: Newco 4 inch Cl 300 Gate Valve

Cycle Number: 30 **Date** 10/23/2006

Time	Pressure (psig)	Temp. (deg. F)	Sampling Rate (l/m)	PPMv Reading
9:56:43 AM	612.6	149.0	1.0	16.5
9:56:44 AM	612.6	149.0	1.0	16.5
9:56:45 AM	612.6	149.0	1.0	16.4
9:56:46 AM	612.6	149.0	1.0	16.4
9:56:47 AM	612.7	149.0	1.0	16.3
9:56:48 AM	612.7	149.0	1.0	16.3
9:56:49 AM	612.7	150.0	1.0	16.1
9:56:50 AM	612.7	149.0	1.0	15.7
9:56:51 AM	612.7	150.0	1.0	15.8
9:56:52 AM	612.7	150.0	1.0	15.4
9:56:53 AM	612.8	150.0	1.0	15.2
9:56:54 AM	612.8	150.0	1.0	15.2
9:56:55 AM	612.8	150.0	1.0	15.0
9:56:56 AM	612.8	150.0	1.0	14.6
9:56:57 AM	612.8	150.0	1.0	14.4
9:56:57 AM	612.8	150.0	1.0	14.2
9:56:58 AM	612.9	150.0	1.0	14.0
9:56:59 AM	612.9	150.0	1.0	13.8
9:57:00 AM	612.9	150.0	1.0	13.8
9:57:01 AM	612.9	150.0	1.0	13.9
9:57:02 AM	613.0	150.0	1.0	13.8
9:57:03 AM	612.9	150.0	1.0	13.7
9:57:04 AM	612.9	150.0	1.0	13.5
9:57:05 AM	613.0	150.0	1.0	13.1
9:57:06 AM	613.0	150.0	1.0	13.0
9:57:07 AM	613.0	150.0	1.0	12.7
9:57:08 AM	613.0	150.0	1.0	12.6
9:57:09 AM	613.0	150.0	1.0	12.2
9:57:10 AM	613.0	150.0	1.0	12.1
9:57:11 AM	613.0	150.0	1.0	11.9
9:57:12 AM	613.0	150.0	1.0	11.8
9:57:13 AM	613.0	150.0	1.0	11.6
9:57:14 AM	613.0	150.0	1.0	11.2
9:57:15 AM	613.0	149.0	1.0	11.1
9:57:16 AM	613.0	149.0	1.0	10.9
9:57:17 AM	613.0	149.0	1.0	10.7
9:57:18 AM	613.1	149.0	1.0	10.5
9:57:19 AM	613.1	149.0	1.0	10.3
9:57:20 AM	613.1	149.0	1.0	10.1
9:57:21 AM	613.1	149.0	1.0	10.1
9:57:22 AM	613.1	149.0	1.0	10.0
9:57:23 AM	613.1	149.0	1.0	10.1
9:57:24 AM	613.1	148.0	1.0	9.9
9:57:25 AM	613.2	148.0	1.0	10.0
9:57:26 AM	613.2	148.0	1.0	9.9
9:57:27 AM	613.2	148.0	1.0	10.0
9:57:28 AM	613.2	148.0	1.0	9.9
9:57:29 AM	613.2	148.0	1.0	10.0
9:57:30 AM	613.3	147.0	1.0	10.0
9:57:31 AM	613.2	147.0	1.0	10.2
9:57:32 AM	613.2	147.0	1.0	10.2
9:57:33 AM	613.2	147.0	1.0	10.3
9:57:34 AM	613.2	147.0	1.0	10.4
9:57:35 AM	613.2	147.0	1.0	10.4
9:57:36 AM	613.3	146.0	1.0	10.4
9:57:37 AM	613.2	146.0	1.0	10.4
9:57:38 AM	613.3	146.0	1.0	10.3
9:57:39 AM	613.3	145.0	1.0	10.5
9:57:40 AM	613.3	146.0	1.0	10.4
9:57:41 AM	613.3	145.0	1.0	10.5
Averages ->	**613.0**	**148.8**	**1.0**	**12.4**
			Maximum ->	**16.5**

92 East Elm Street, Yarmouth, Maine, 04096 USA
www.yarmouthresearch.com

Yarmouth Research and Technology

Valve Description: Newco 4 inch Cl 300 Gate Valve

Cycle Number: 30 **Date** 10/23/2006

Time	Pressure (psig)	Temp. (deg. F)	Sampling Rate (l/m)	PPMv Reading
10:06:56 AM	605.2	133.0	1.0	16.4
10:06:57 AM	604.9	133.0	1.0	15.9
10:06:58 AM	604.6	134.0	1.0	16.5
10:06:59 AM	604.2	134.0	1.0	15.1
10:07:00 AM	604.0	134.0	1.0	17.4
10:07:01 AM	603.7	134.0	1.0	14.4
10:07:02 AM	603.4	134.0	1.0	16.8
10:07:03 AM	603.2	134.0	1.0	14.7
10:07:04 AM	602.9	134.0	1.0	16.0
10:07:05 AM	602.6	135.0	1.0	15.0
10:07:06 AM	602.4	135.0	1.0	15.9
10:07:07 AM	602.1	135.0	1.0	15.0
10:07:08 AM	601.9	135.0	1.0	17.1
10:07:09 AM	601.7	136.0	1.0	15.2
10:07:10 AM	601.5	136.0	1.0	14.5
10:07:11 AM	601.3	136.0	1.0	15.7
10:07:12 AM	601.0	136.0	1.0	14.6
10:07:13 AM	600.8	137.0	1.0	15.7
10:07:14 AM	600.5	137.0	1.0	14.9
10:07:15 AM	600.3	137.0	1.0	16.1
10:07:16 AM	600.3	138.0	1.0	14.1
10:07:17 AM	600.3	138.0	1.0	16.0
10:07:18 AM	600.4	138.0	1.0	14.6
10:07:19 AM	600.4	139.0	1.0	16.4
10:07:20 AM	600.4	139.0	1.0	14.6
10:07:21 AM	600.5	139.0	1.0	16.8
10:07:22 AM	600.5	140.0	1.0	13.9
10:07:23 AM	600.6	140.0	1.0	13.8
10:07:24 AM	600.6	140.0	1.0	15.9
10:07:25 AM	600.6	141.0	1.0	13.2
10:07:26 AM	600.7	141.0	1.0	16.6
10:07:27 AM	599.3	141.0	1.0	13.2
10:07:28 AM	600.9	141.0	1.0	13.4
10:07:29 AM	601.2	141.0	1.0	15.1
10:07:30 AM	601.5	141.0	1.0	13.6
10:07:31 AM	601.7	141.0	1.0	12.8
10:07:32 AM	602.1	141.0	1.0	15.9
10:07:33 AM	602.3	141.0	1.0	13.1
10:07:34 AM	602.6	141.0	1.0	12.7
10:07:35 AM	602.9	141.0	1.0	15.0
10:07:36 AM	603.2	141.0	1.0	14.0
10:07:37 AM	603.5	141.0	1.0	15.0
10:07:38 AM	603.8	141.0	1.0	14.0
10:07:39 AM	604.1	141.0	1.0	12.8
10:07:40 AM	604.4	141.0	1.0	16.1
10:07:41 AM	604.6	141.0	1.0	13.4
10:07:42 AM	605.0	141.0	1.0	15.0
10:07:43 AM	605.3	141.0	1.0	13.9
10:07:44 AM	605.6	141.0	1.0	15.3
10:07:45 AM	605.8	141.0	1.0	15.0
10:07:46 AM	606.1	142.0	1.0	15.8
10:07:47 AM	606.4	142.0	1.0	14.8
10:07:48 AM	606.7	142.0	1.0	15.8
10:07:49 AM	607.0	142.0	1.0	15.7
10:07:49 AM	607.4	142.0	1.0	16.9
10:07:50 AM	607.7	142.0	1.0	18.0
10:07:51 AM	607.7	142.0	1.0	18.0
10:07:52 AM	608.0	142.0	1.0	17.2
10:07:53 AM	608.2	143.0	1.0	21.1
10:07:54 AM	608.2	143.0	1.0	21.8
Averages ->	**603.2**	**138.9**	**1.0**	**15.4**
			Maximum ->	**21.8**

92 East Elm Street, Yarmouth, Maine, 04096 USA
www.yarmouthresearch.com

Yarmouth Research and Technology

Valve Description: Newco 4 inch Cl 300 Gate Valve

Cycle Number: 31 **Date** 10/23/2006

Time	Pressure (psig)	Temp. (deg. F)	Sampling Rate (l/m)	PPMv Reading
10:14:34 AM	602.5	149.0	1.0	1.2
10:14:35 AM	602.5	149.0	1.0	1.3
10:14:36 AM	602.5	149.0	1.0	1.2
10:14:37 AM	602.5	149.0	1.0	1.4
10:14:38 AM	602.6	149.0	1.0	1.1
10:14:39 AM	602.5	149.0	1.0	1.3
10:14:40 AM	602.6	149.0	1.0	1.2
10:14:41 AM	602.7	149.0	1.0	1.4
10:14:42 AM	602.6	149.0	1.0	1.5
10:14:43 AM	602.7	149.0	1.0	1.3
10:14:44 AM	602.6	149.0	1.0	1.2
10:14:45 AM	602.6	149.0	1.0	1.2
10:14:46 AM	602.7	149.0	1.0	1.4
10:14:47 AM	602.7	149.0	1.0	1.5
10:14:48 AM	602.7	149.0	1.0	1.5
10:14:49 AM	602.7	149.0	1.0	1.5
10:14:50 AM	602.7	149.0	1.0	1.3
10:14:51 AM	602.7	149.0	1.0	1.4
10:14:52 AM	602.7	149.0	1.0	1.6
10:14:53 AM	602.7	148.0	1.0	1.3
10:14:54 AM	602.7	148.0	1.0	1.3
10:14:55 AM	602.7	148.0	1.0	1.6
10:14:56 AM	602.7	149.0	1.0	1.4
10:14:57 AM	602.8	149.0	1.0	1.2
10:14:58 AM	602.7	148.0	1.0	1.1
10:14:59 AM	602.7	148.0	1.0	1.2
10:15:00 AM	602.8	148.0	1.0	0.9
10:15:01 AM	602.8	148.0	1.0	1.1
10:15:02 AM	602.8	148.0	1.0	1.0
10:15:03 AM	602.8	148.0	1.0	1.0
10:15:04 AM	602.8	148.0	1.0	1.1
10:15:05 AM	602.8	148.0	1.0	0.9
10:15:06 AM	602.8	148.0	1.0	1.0
10:15:07 AM	602.8	148.0	1.0	0.8
10:15:08 AM	602.8	148.0	1.0	0.8
10:15:09 AM	602.8	148.0	1.0	0.8
10:15:10 AM	602.8	148.0	1.0	0.7
10:15:11 AM	602.8	148.0	1.0	0.7
10:15:12 AM	602.8	148.0	1.0	0.8
10:15:13 AM	602.8	148.0	1.0	1.0
10:15:14 AM	602.8	148.0	1.0	1.0
10:15:15 AM	602.9	148.0	1.0	0.9
10:15:16 AM	602.8	148.0	1.0	0.9
10:15:17 AM	602.9	148.0	1.0	0.9
10:15:18 AM	602.8	148.0	1.0	0.9
10:15:19 AM	602.8	148.0	1.0	0.8
10:15:20 AM	602.8	148.0	1.0	0.8
10:15:21 AM	602.8	148.0	1.0	0.9
10:15:22 AM	602.9	148.0	1.0	0.8
10:15:23 AM	602.9	148.0	1.0	0.9
10:15:24 AM	602.9	148.0	1.0	0.9
10:15:25 AM	602.9	148.0	1.0	0.9
10:15:26 AM	602.9	148.0	1.0	1.0
10:15:27 AM	602.9	148.0	1.0	0.8
10:15:28 AM	602.9	148.0	1.0	0.8
10:15:29 AM	602.9	148.0	1.0	0.8
10:15:30 AM	602.9	148.0	1.0	0.8
10:15:31 AM	602.9	148.0	1.0	0.8
10:15:31 AM	602.9	148.0	1.0	0.8
10:15:32 AM	602.9	148.0	1.0	0.8
Averages ->	**602.8**	**148.4**	**1.0**	**1.1**
			Maximum ->	**1.6**

Yarmouth Research and Technology

Valve Description: Newco 4 inch Cl 300 Gate Valve

Cycle Number: 31 **Date** 10/23/2006

Time	Pressure (psig)	Temp. (deg. F)	Sampling Rate (l/m)	PPMv Reading
10:16:02 AM	596.4	149.0	1.0	0.9
10:16:03 AM	596.4	149.0	1.0	0.9
10:16:04 AM	596.4	149.0	1.0	1.0
10:16:05 AM	596.4	148.0	1.0	1.1
10:16:06 AM	596.5	149.0	1.0	1.0
10:16:07 AM	596.5	148.0	1.0	1.0
10:16:08 AM	596.6	148.0	1.0	1.1
10:16:09 AM	596.6	148.0	1.0	1.1
10:16:10 AM	596.6	148.0	1.0	1.1
10:16:11 AM	596.8	148.0	1.0	1.1
10:16:12 AM	597.0	148.0	1.0	1.1
10:16:13 AM	597.4	148.0	1.0	1.1
10:16:14 AM	597.7	148.0	1.0	1.1
10:16:15 AM	598.0	148.0	1.0	1.0
10:16:16 AM	598.3	148.0	1.0	1.1
10:16:17 AM	598.6	148.0	1.0	1.2
10:16:18 AM	598.8	147.0	1.0	1.1
10:16:19 AM	599.1	147.0	1.0	1.1
10:16:20 AM	599.5	147.0	1.0	1.4
10:16:21 AM	599.8	147.0	1.0	1.2
10:16:22 AM	600.0	147.0	1.0	1.2
10:16:23 AM	600.3	147.0	1.0	1.3
10:16:24 AM	600.6	147.0	1.0	1.3
10:16:25 AM	600.9	147.0	1.0	1.3
10:16:26 AM	601.1	147.0	1.0	1.4
10:16:27 AM	601.4	147.0	1.0	1.2
10:16:28 AM	601.7	147.0	1.0	1.3
10:16:29 AM	602.0	147.0	1.0	1.3
10:16:30 AM	602.4	147.0	1.0	1.2
10:16:31 AM	602.6	147.0	1.0	1.3
10:16:32 AM	602.9	147.0	1.0	1.1
10:16:33 AM	603.3	147.0	1.0	1.0
10:16:34 AM	603.6	147.0	1.0	1.1
10:16:35 AM	603.9	147.0	1.0	1.1
10:16:36 AM	604.0	147.0	1.0	1.1
10:16:37 AM	604.1	147.0	1.0	1.1
10:16:38 AM	604.1	148.0	1.0	1.0
10:16:39 AM	604.2	148.0	1.0	1.1
10:16:40 AM	604.2	148.0	1.0	1.0
10:16:41 AM	604.2	148.0	1.0	1.2
10:16:42 AM	604.2	148.0	1.0	1.1
10:16:43 AM	604.2	148.0	1.0	1.2
10:16:44 AM	604.2	148.0	1.0	1.4
10:16:45 AM	604.2	148.0	1.0	1.5
10:16:46 AM	604.2	148.0	1.0	1.2
10:16:47 AM	604.2	149.0	1.0	1.2
10:16:48 AM	604.2	149.0	1.0	1.6
10:16:49 AM	604.1	149.0	1.0	1.7
10:16:50 AM	603.8	149.0	1.0	1.8
10:16:51 AM	603.5	149.0	1.0	1.7
10:16:52 AM	603.1	149.0	1.0	1.9
10:16:53 AM	602.8	149.0	1.0	2.0
10:16:54 AM	602.5	149.0	1.0	1.9
10:16:54 AM	602.1	149.0	1.0	1.8
10:16:55 AM	602.1	149.0	1.0	1.8
10:16:56 AM	601.8	149.0	1.0	1.9
10:16:57 AM	601.4	149.0	1.0	1.7
10:16:58 AM	601.2	150.0	1.0	1.9
10:16:59 AM	600.8	150.0	1.0	1.9
10:17:00 AM	600.6	150.0	1.0	1.9
Averages ->	**601.0**	**148.0**	**1.0**	**1.3**
			Maximum ->	**2.0**

92 East Elm Street, Yarmouth, Maine, 04096 USA
www.yarmouthresearch.com

Yarmouth Research and Technology

Valve Description: Newco 4 inch Cl 300 Gate Valve

Cycle Number: 100 **Date** 10/23/2006

Time	Pressure (psig)	Temp. (deg. F)	Sampling Rate (l/m)	PPMv Reading
11:46:15 AM	601.9	317.0	1.0	55.3
11:46:16 AM	601.9	317.0	1.0	55.7
11:46:17 AM	601.9	317.0	1.0	56.3
11:46:18 AM	601.9	317.0	1.0	57.2
11:46:19 AM	602.0	317.0	1.0	57.9
11:46:20 AM	602.0	317.0	1.0	57.7
11:46:21 AM	602.0	317.0	1.0	57.8
11:46:22 AM	602.0	317.0	1.0	57.9
11:46:23 AM	602.1	317.0	1.0	57.4
11:46:24 AM	602.1	317.0	1.0	56.9
11:46:25 AM	602.1	317.0	1.0	56.6
11:46:26 AM	602.1	317.0	1.0	56.6
11:46:27 AM	602.1	317.0	1.0	56.2
11:46:28 AM	602.1	317.0	1.0	56.1
11:46:29 AM	602.1	317.0	1.0	55.7
11:46:30 AM	602.0	317.0	1.0	55.7
11:46:31 AM	602.0	318.0	1.0	55.1
11:46:32 AM	602.0	318.0	1.0	55.1
11:46:33 AM	602.0	317.0	1.0	54.7
11:46:34 AM	602.0	317.0	1.0	54.7
11:46:35 AM	602.0	317.0	1.0	54.9
11:46:36 AM	602.0	317.0	1.0	55.5
11:46:37 AM	602.0	317.0	1.0	56.2
11:46:38 AM	602.0	317.0	1.0	55.6
11:46:39 AM	602.0	318.0	1.0	54.6
11:46:40 AM	602.0	318.0	1.0	54.5
11:46:41 AM	602.1	318.0	1.0	54.4
11:46:42 AM	602.1	317.0	1.0	54.5
11:46:43 AM	602.1	318.0	1.0	54.0
11:46:44 AM	602.1	318.0	1.0	54.1
11:46:45 AM	602.1	317.0	1.0	53.9
11:46:46 AM	602.1	317.0	1.0	54.4
11:46:47 AM	602.1	317.0	1.0	54.9
11:46:48 AM	602.1	317.0	1.0	55.1
11:46:49 AM	602.1	317.0	1.0	56.1
11:46:50 AM	602.1	318.0	1.0	56.4
11:46:51 AM	602.1	317.0	1.0	56.0
11:46:52 AM	602.1	317.0	1.0	56.0
11:46:53 AM	602.1	317.0	1.0	55.8
11:46:54 AM	602.2	317.0	1.0	55.6
11:46:55 AM	602.2	318.0	1.0	55.5
11:46:56 AM	602.2	318.0	1.0	55.1
11:46:57 AM	602.2	317.0	1.0	55.0
11:46:58 AM	602.2	318.0	1.0	55.5
11:46:59 AM	602.3	318.0	1.0	55.3
11:47:00 AM	602.3	318.0	1.0	55.8
11:47:01 AM	602.3	318.0	1.0	55.4
11:47:02 AM	602.3	318.0	1.0	55.9
11:47:02 AM	602.3	318.0	1.0	56.0
11:47:03 AM	602.3	318.0	1.0	55.8
11:47:04 AM	602.3	318.0	1.0	56.2
11:47:05 AM	602.4	318.0	1.0	56.3
11:47:06 AM	602.4	318.0	1.0	55.7
11:47:07 AM	602.4	318.0	1.0	55.8
11:47:08 AM	602.4	318.0	1.0	55.9
11:47:09 AM	602.4	318.0	1.0	55.8
11:47:10 AM	602.4	318.0	1.0	55.9
11:47:11 AM	602.4	318.0	1.0	55.9
11:47:12 AM	602.4	318.0	1.0	55.4
11:47:13 AM	602.4	318.0	1.0	55.6
Averages ->	**602.1**	**317.5**	**1.0**	**55.7**
			Maximum ->	**57.9**

Yarmouth Research and Technology

Valve Description: Newco 4 inch Cl 300 Gate Valve

Cycle Number: 100 **Date** 10/23/2006

Time	Pressure (psig)	Temp. (deg. F)	Sampling Rate (l/m)	PPMv Reading
11:47:55 AM	595.0	317.0	1.0	59.4
11:47:56 AM	595.0	317.0	1.0	59.0
11:47:57 AM	595.0	317.0	1.0	60.2
11:47:58 AM	595.0	317.0	1.0	60.3
11:47:59 AM	595.0	317.0	1.0	61.5
11:48:00 AM	595.0	317.0	1.0	61.5
11:48:01 AM	595.0	317.0	1.0	63.5
11:48:02 AM	595.5	317.0	1.0	66.0
11:48:03 AM	595.3	317.0	1.0	68.2
11:48:04 AM	595.6	316.0	1.0	67.8
11:48:05 AM	596.0	317.0	1.0	66.1
11:48:06 AM	596.3	316.0	1.0	62.8
11:48:07 AM	596.6	316.0	1.0	59.9
11:48:08 AM	596.9	316.0	1.0	58.5
11:48:09 AM	597.3	316.0	1.0	57.0
11:48:10 AM	597.6	316.0	1.0	55.3
11:48:10 AM	597.9	316.0	1.0	54.3
11:48:11 AM	598.3	316.0	1.0	53.8
11:48:12 AM	598.6	316.0	1.0	53.2
11:48:13 AM	599.0	316.0	1.0	53.2
11:48:14 AM	599.3	316.0	1.0	53.5
11:48:15 AM	599.6	316.0	1.0	55.3
11:48:16 AM	600.0	316.0	1.0	56.0
11:48:17 AM	600.3	316.0	1.0	57.0
11:48:18 AM	600.7	316.0	1.0	57.5
11:48:19 AM	601.0	316.0	1.0	57.1
11:48:20 AM	601.4	316.0	1.0	55.8
11:48:21 AM	601.8	316.0	1.0	55.4
11:48:22 AM	602.3	316.0	1.0	57.0
11:48:23 AM	602.7	316.0	1.0	58.4
11:48:24 AM	603.2	316.0	1.0	59.7
11:48:25 AM	603.6	316.0	1.0	59.8
11:48:26 AM	604.1	316.0	1.0	60.0
11:48:27 AM	604.3	316.0	1.0	59.0
11:48:28 AM	604.4	316.0	1.0	59.4
11:48:29 AM	604.5	316.0	1.0	59.6
11:48:30 AM	604.5	316.0	1.0	59.4
11:48:31 AM	604.6	316.0	1.0	59.5
11:48:32 AM	604.7	316.0	1.0	58.3
11:48:33 AM	604.7	316.0	1.0	57.6
11:48:34 AM	604.7	316.0	1.0	57.1
11:48:35 AM	604.7	316.0	1.0	56.5
11:48:36 AM	604.7	316.0	1.0	56.1
11:48:37 AM	604.7	316.0	1.0	55.7
11:48:38 AM	604.7	316.0	1.0	55.7
11:48:39 AM	604.7	316.0	1.0	55.4
11:48:40 AM	604.5	316.0	1.0	54.6
11:48:41 AM	604.2	316.0	1.0	54.6
11:48:42 AM	603.8	316.0	1.0	53.7
11:48:43 AM	603.4	316.0	1.0	52.5
11:48:44 AM	603.0	316.0	1.0	51.4
11:48:45 AM	602.6	316.0	1.0	51.3
11:48:46 AM	602.2	316.0	1.0	50.2
11:48:47 AM	601.8	316.0	1.0	48.9
11:48:48 AM	601.4	316.0	1.0	48.4
11:48:49 AM	601.0	316.0	1.0	48.0
11:48:50 AM	600.6	316.0	1.0	48.2
11:48:51 AM	600.3	316.0	1.0	47.8
11:48:52 AM	599.9	316.0	1.0	48.5
11:48:53 AM	599.6	316.0	1.0	49.7
Averages ->	**600.6**	**316.2**	**1.0**	**56.7**
			Maximum ->	**68.2**

Yarmouth Research and Technology

Valve Description: Newco 4 inch Cl 300 Gate Valve

Cycle Number: 200 **Date** 10/23/2006

Time	Pressure (psig)	Temp. (deg. F)	Sampling Rate (l/m)	PPMv Reading
1:54:29 PM	608.9	496.0	1.0	64.2
1:54:30 PM	608.9	496.0	1.0	60.5
1:54:31 PM	608.9	496.0	1.0	62.8
1:54:32 PM	608.9	496.0	1.0	62.8
1:54:33 PM	608.9	496.0	1.0	64.0
1:54:34 PM	609.0	496.0	1.0	62.1
1:54:35 PM	609.0	496.0	1.0	63.9
1:54:36 PM	609.0	496.0	1.0	63.4
1:54:37 PM	609.0	496.0	1.0	62.0
1:54:38 PM	609.0	496.0	1.0	62.8
1:54:39 PM	609.0	496.0	1.0	62.1
1:54:40 PM	609.0	496.0	1.0	61.0
1:54:41 PM	609.0	496.0	1.0	62.2
1:54:42 PM	609.0	496.0	1.0	61.2
1:54:43 PM	609.0	496.0	1.0	63.6
1:54:44 PM	609.0	496.0	1.0	62.5
1:54:45 PM	609.0	496.0	1.0	61.7
1:54:46 PM	609.0	496.0	1.0	62.6
1:54:47 PM	609.0	496.0	1.0	62.8
1:54:48 PM	609.1	496.0	1.0	62.2
1:54:49 PM	609.1	496.0	1.0	61.6
1:54:50 PM	609.1	496.0	1.0	61.0
1:54:51 PM	609.1	496.0	1.0	62.0
1:54:52 PM	609.1	496.0	1.0	62.4
1:54:53 PM	609.1	496.0	1.0	62.8
1:54:54 PM	609.1	496.0	1.0	61.0
1:54:55 PM	609.1	497.0	1.0	60.7
1:54:56 PM	609.1	496.0	1.0	60.7
1:54:57 PM	609.2	496.0	1.0	61.0
1:54:58 PM	609.2	496.0	1.0	61.9
1:54:59 PM	609.2	496.0	1.0	60.9
1:55:00 PM	609.2	496.0	1.0	61.0
1:55:01 PM	609.3	496.0	1.0	60.5
1:55:02 PM	609.2	496.0	1.0	60.5
1:55:03 PM	609.2	497.0	1.0	60.6
1:55:04 PM	609.2	497.0	1.0	60.6
1:55:05 PM	609.3	497.0	1.0	60.8
1:55:06 PM	609.3	496.0	1.0	60.7
1:55:07 PM	609.3	497.0	1.0	60.9
1:55:08 PM	609.3	497.0	1.0	61.2
1:55:09 PM	609.3	496.0	1.0	60.6
1:55:10 PM	609.3	496.0	1.0	60.9
1:55:11 PM	609.3	497.0	1.0	60.8
1:55:12 PM	609.3	497.0	1.0	60.5
1:55:13 PM	609.3	496.0	1.0	60.6
1:55:14 PM	609.3	496.0	1.0	61.1
1:55:15 PM	609.3	496.0	1.0	61.4
1:55:16 PM	609.3	497.0	1.0	61.6
1:55:17 PM	609.3	497.0	1.0	61.5
1:55:18 PM	609.3	496.0	1.0	61.5
1:55:19 PM	609.4	497.0	1.0	61.0
1:55:20 PM	609.4	497.0	1.0	60.2
1:55:21 PM	609.4	497.0	1.0	60.0
1:55:22 PM	609.4	497.0	1.0	59.9
1:55:23 PM	609.4	496.0	1.0	59.8
1:55:24 PM	609.4	496.0	1.0	59.2
1:55:25 PM	609.5	497.0	1.0	58.9
1:55:26 PM	609.5	497.0	1.0	58.9
1:55:27 PM	609.5	497.0	1.0	58.7
1:55:28 PM	609.5	497.0	1.0	59.0
Averages ->	**609.2**	**496.3**	**1.0**	**61.3**
			Maximum ->	**64.2**

92 East Elm Street, Yarmouth, Maine, 04096 USA
www.yarmouthresearch.com

Yarmouth Research and Technology

Valve Description: Newco 4 inch Cl 300 Gate Valve

Cycle Number: 200 **Date** 10/23/2006

Time	Pressure (psig)	Temp. (deg. F)	Sampling Rate (l/m)	PPMv Reading
1:57:43 PM	601.0	496.0	1.0	57.5
1:57:44 PM	601.3	496.0	1.0	56.2
1:57:45 PM	601.7	496.0	1.0	56.0
1:57:46 PM	602.0	496.0	1.0	55.7
1:57:47 PM	602.3	496.0	1.0	55.9
1:57:48 PM	602.7	496.0	1.0	55.8
1:57:49 PM	603.0	496.0	1.0	55.6
1:57:50 PM	603.4	496.0	1.0	55.3
1:57:51 PM	603.7	496.0	1.0	55.1
1:57:52 PM	604.1	496.0	1.0	55.2
1:57:53 PM	604.5	496.0	1.0	54.9
1:57:54 PM	604.9	496.0	1.0	54.9
1:57:55 PM	605.4	496.0	1.0	54.2
1:57:56 PM	605.8	496.0	1.0	54.2
1:57:57 PM	606.1	496.0	1.0	54.5
1:57:57 PM	606.3	496.0	1.0	54.3
1:57:58 PM	606.4	496.0	1.0	54.6
1:57:59 PM	606.4	496.0	1.0	54.3
1:58:00 PM	606.5	496.0	1.0	54.0
1:58:01 PM	606.5	496.0	1.0	53.2
1:58:02 PM	606.5	496.0	1.0	53.2
1:58:03 PM	606.5	496.0	1.0	54.7
1:58:04 PM	606.6	496.0	1.0	55.9
1:58:05 PM	606.6	496.0	1.0	56.9
1:58:06 PM	606.6	496.0	1.0	57.3
1:58:07 PM	606.6	496.0	1.0	57.5
1:58:08 PM	606.6	496.0	1.0	58.2
1:58:09 PM	606.6	496.0	1.0	58.4
1:58:10 PM	606.3	496.0	1.0	58.8
1:58:11 PM	605.9	496.0	1.0	59.3
1:58:12 PM	605.5	496.0	1.0	60.2
1:58:13 PM	605.1	496.0	1.0	60.6
1:58:14 PM	604.7	496.0	1.0	60.3
1:58:15 PM	604.4	496.0	1.0	60.2
1:58:16 PM	604.0	496.0	1.0	60.5
1:58:17 PM	603.6	496.0	1.0	61.0
1:58:18 PM	603.3	496.0	1.0	61.1
1:58:19 PM	602.9	496.0	1.0	60.6
1:58:20 PM	602.6	496.0	1.0	61.4
1:58:21 PM	602.2	496.0	1.0	62.2
1:58:22 PM	601.9	496.0	1.0	61.5
1:58:23 PM	601.6	496.0	1.0	60.3
1:58:24 PM	601.2	496.0	1.0	60.1
1:58:25 PM	600.9	496.0	1.0	59.8
1:58:26 PM	600.6	496.0	1.0	60.3
1:58:27 PM	600.3	496.0	1.0	60.2
1:58:28 PM	599.9	496.0	1.0	60.2
1:58:29 PM	599.6	496.0	1.0	59.9
1:58:30 PM	599.3	496.0	1.0	60.4
1:58:31 PM	598.9	496.0	1.0	60.3
1:58:32 PM	598.6	496.0	1.0	59.1
1:58:33 PM	598.6	496.0	1.0	59.1
1:58:34 PM	598.4	496.0	1.0	58.1
1:58:35 PM	598.4	496.0	1.0	57.3
1:58:36 PM	598.4	496.0	1.0	57.2
1:58:37 PM	598.4	496.0	1.0	57.8
1:58:38 PM	598.4	496.0	1.0	57.7
1:58:39 PM	598.4	496.0	1.0	57.7
1:58:40 PM	598.4	496.0	1.0	57.0
1:58:41 PM	598.4	496.0	1.0	56.6
Averages ->	**602.9**	**496.0**	**1.0**	**57.7**
			Maximum ->	**62.2**

92 East Elm Street, Yarmouth, Maine, 04096 USA
www.yarmouthresearch.com

Yarmouth Research and Technology

Valve Description: Newco 4 inch Cl 300 Gate Valve

Cycle Number: 300 **Date** 10/23/2006

Time	Pressure (psig)	Temp. (deg. F)	Sampling Rate (l/m)	PPMv Reading
4:11:43 PM	604.5	497.0	1.0	43.7
4:11:44 PM	604.6	497.0	1.0	44.7
4:11:45 PM	604.5	497.0	1.0	45.4
4:11:46 PM	604.6	497.0	1.0	45.4
4:11:47 PM	604.6	497.0	1.0	45.9
4:11:47 PM	604.6	497.0	1.0	46.3
4:11:48 PM	604.5	497.0	1.0	45.9
4:11:49 PM	604.6	497.0	1.0	46.2
4:11:50 PM	604.6	497.0	1.0	48.2
4:11:51 PM	604.6	497.0	1.0	48.6
4:11:52 PM	604.6	497.0	1.0	49.0
4:11:53 PM	604.6	497.0	1.0	48.4
4:11:54 PM	604.6	497.0	1.0	46.5
4:11:55 PM	604.6	497.0	1.0	46.1
4:11:56 PM	604.6	497.0	1.0	45.5
4:11:57 PM	604.6	497.0	1.0	45.2
4:11:58 PM	604.6	497.0	1.0	44.8
4:11:59 PM	604.6	497.0	1.0	44.8
4:12:00 PM	604.6	497.0	1.0	44.8
4:12:01 PM	604.6	497.0	1.0	44.8
4:12:02 PM	604.6	497.0	1.0	44.7
4:12:03 PM	604.6	497.0	1.0	44.7
4:12:04 PM	604.6	497.0	1.0	44.8
4:12:05 PM	604.6	497.0	1.0	44.8
4:12:06 PM	604.6	497.0	1.0	44.8
4:12:07 PM	604.6	497.0	1.0	44.8
4:12:08 PM	604.6	497.0	1.0	44.4
4:12:09 PM	604.6	497.0	1.0	44.4
4:12:10 PM	604.6	497.0	1.0	44.3
4:12:11 PM	604.7	497.0	1.0	44.1
4:12:12 PM	604.6	497.0	1.0	44.2
4:12:13 PM	604.7	497.0	1.0	44.4
4:12:14 PM	604.7	497.0	1.0	44.6
4:12:15 PM	604.6	497.0	1.0	44.9
4:12:16 PM	604.7	497.0	1.0	45.4
4:12:17 PM	604.6	497.0	1.0	45.3
4:12:18 PM	604.7	497.0	1.0	45.6
4:12:19 PM	604.7	497.0	1.0	45.7
4:12:20 PM	604.7	497.0	1.0	45.8
4:12:21 PM	604.7	497.0	1.0	45.4
4:12:22 PM	604.7	497.0	1.0	45.4
4:12:23 PM	604.7	497.0	1.0	45.1
4:12:24 PM	604.7	497.0	1.0	45.3
4:12:25 PM	604.7	497.0	1.0	45.2
4:12:26 PM	604.7	497.0	1.0	46.3
4:12:27 PM	604.7	497.0	1.0	47.8
4:12:28 PM	604.7	497.0	1.0	47.6
4:12:29 PM	604.7	497.0	1.0	46.5
4:12:30 PM	604.7	497.0	1.0	46.0
4:12:31 PM	604.7	497.0	1.0	45.0
4:12:32 PM	604.7	497.0	1.0	44.9
4:12:33 PM	604.7	497.0	1.0	44.7
4:12:34 PM	604.7	497.0	1.0	45.6
4:12:35 PM	604.7	497.0	1.0	45.5
4:12:36 PM	604.7	497.0	1.0	45.6
4:12:37 PM	604.7	497.0	1.0	45.5
4:12:38 PM	604.7	497.0	1.0	45.4
4:12:39 PM	604.7	497.0	1.0	45.6
4:12:40 PM	604.7	497.0	1.0	45.2
4:12:41 PM	604.7	497.0	1.0	45.3
Averages ->	**604.6**	**497.0**	**1.0**	**45.5**
			Maximum ->	**49.0**

92 East Elm Street, Yarmouth, Maine, 04096 USA
www.yarmouthresearch.com

Yarmouth Research and Technology

Valve Description: Newco 4 inch Cl 300 Gate Valve

Cycle Number: 300 **Date** 10/23/2006

Time	Pressure (psig)	Temp. (deg. F)	Sampling Rate (l/m)	PPMv Reading
4:13:28 PM	596.7	496.0	1.0	51.6
4:13:28 PM	597.0	496.0	1.0	51.4
4:13:29 PM	597.3	496.0	1.0	51.7
4:13:30 PM	597.6	496.0	1.0	52.0
4:13:31 PM	598.0	496.0	1.0	52.5
4:13:32 PM	598.3	496.0	1.0	52.4
4:13:33 PM	598.6	496.0	1.0	52.0
4:13:34 PM	599.0	496.0	1.0	51.5
4:13:35 PM	599.3	496.0	1.0	50.8
4:13:36 PM	599.6	496.0	1.0	49.9
4:13:37 PM	600.0	496.0	1.0	49.2
4:13:38 PM	600.3	495.0	1.0	48.3
4:13:39 PM	600.6	495.0	1.0	47.5
4:13:40 PM	601.0	495.0	1.0	46.8
4:13:41 PM	601.3	495.0	1.0	46.5
4:13:42 PM	601.6	495.0	1.0	46.2
4:13:43 PM	602.0	495.0	1.0	45.8
4:13:44 PM	602.4	495.0	1.0	46.9
4:13:45 PM	602.7	495.0	1.0	48.6
4:13:46 PM	602.7	495.0	1.0	48.6
4:13:47 PM	603.1	495.0	1.0	49.6
4:13:48 PM	603.4	495.0	1.0	49.2
4:13:49 PM	603.9	495.0	1.0	47.9
4:13:50 PM	604.2	495.0	1.0	45.9
4:13:51 PM	604.6	495.0	1.0	44.7
4:13:52 PM	605.0	495.0	1.0	43.6
4:13:53 PM	605.3	495.0	1.0	43.7
4:13:54 PM	605.3	495.0	1.0	44.6
4:13:55 PM	605.4	495.0	1.0	44.7
4:13:56 PM	605.5	495.0	1.0	44.3
4:13:57 PM	605.5	495.0	1.0	43.5
4:13:58 PM	605.5	495.0	1.0	43.1
4:13:59 PM	605.6	495.0	1.0	42.4
4:14:00 PM	605.6	495.0	1.0	42.5
4:14:01 PM	605.6	495.0	1.0	42.7
4:14:02 PM	605.6	495.0	1.0	42.5
4:14:03 PM	605.6	495.0	1.0	42.6
4:14:04 PM	605.6	495.0	1.0	42.2
4:14:05 PM	605.6	495.0	1.0	41.9
4:14:06 PM	605.5	495.0	1.0	41.9
4:14:07 PM	605.2	495.0	1.0	44.9
4:14:08 PM	604.8	495.0	1.0	46.3
4:14:09 PM	604.4	496.0	1.0	46.8
4:14:10 PM	604.1	496.0	1.0	45.3
4:14:11 PM	603.7	495.0	1.0	43.9
4:14:12 PM	603.3	495.0	1.0	43.2
4:14:13 PM	602.9	495.0	1.0	42.9
4:14:14 PM	602.5	495.0	1.0	43.1
4:14:15 PM	602.1	495.0	1.0	43.5
4:14:16 PM	601.8	495.0	1.0	43.5
4:14:17 PM	601.5	496.0	1.0	43.3
4:14:18 PM	601.1	495.0	1.0	43.3
4:14:19 PM	600.7	495.0	1.0	43.4
4:14:20 PM	600.4	496.0	1.0	43.2
4:14:21 PM	600.0	496.0	1.0	43.3
4:14:22 PM	599.7	495.0	1.0	43.2
4:14:23 PM	599.4	496.0	1.0	43.6
4:14:24 PM	599.0	496.0	1.0	43.4
4:14:25 PM	598.7	495.0	1.0	43.3
4:14:26 PM	598.4	495.0	1.0	42.9
Averages ->	**602.2**	**495.3**	**1.0**	**45.8**
			Maximum ->	**52.5**

92 East Elm Street, Yarmouth, Maine, 04096 USA
www.yarmouthresearch.com

Yarmouth Research and Technology

Valve Description: Newco 4 inch Cl 300 Gate Valve

Cycle Number: 400 **Date** 10/23/2006

Time	Pressure (psig)	Temp. (deg. F)	Sampling Rate (l/m)	PPMv Reading
6:31:37 PM	600.8	320.0	1.0	28.9
6:31:38 PM	600.8	320.0	1.0	28.6
6:31:39 PM	600.8	320.0	1.0	29.7
6:31:40 PM	600.8	320.0	1.0	29.9
6:31:41 PM	600.8	320.0	1.0	29.4
6:31:42 PM	600.8	320.0	1.0	28.7
6:31:43 PM	600.8	320.0	1.0	28.2
6:31:44 PM	600.8	320.0	1.0	28.4
6:31:45 PM	600.8	320.0	1.0	28.2
6:31:46 PM	600.8	320.0	1.0	28.3
6:31:47 PM	600.8	320.0	1.0	29.2
6:31:48 PM	600.8	320.0	1.0	29.1
6:31:49 PM	600.8	320.0	1.0	28.9
6:31:50 PM	600.8	320.0	1.0	28.8
6:31:51 PM	600.8	320.0	1.0	28.7
6:31:52 PM	600.8	320.0	1.0	29.0
6:31:53 PM	600.8	320.0	1.0	30.0
6:31:54 PM	600.8	320.0	1.0	30.4
6:31:55 PM	600.8	320.0	1.0	30.7
6:31:56 PM	600.8	320.0	1.0	30.4
6:31:57 PM	600.8	319.0	1.0	29.3
6:31:58 PM	600.8	319.0	1.0	28.5
6:31:59 PM	600.8	319.0	1.0	28.3
6:32:00 PM	600.8	319.0	1.0	27.5
6:32:01 PM	600.8	319.0	1.0	27.4
6:32:02 PM	600.8	319.0	1.0	27.6
6:32:03 PM	600.9	319.0	1.0	28.2
6:32:04 PM	600.9	319.0	1.0	28.0
6:32:05 PM	600.9	319.0	1.0	27.2
6:32:06 PM	600.9	319.0	1.0	26.3
6:32:07 PM	600.8	318.0	1.0	25.5
6:32:08 PM	600.9	319.0	1.0	24.9
6:32:09 PM	600.9	318.0	1.0	24.6
6:32:10 PM	600.9	319.0	1.0	25.0
6:32:11 PM	600.9	318.0	1.0	24.4
6:32:12 PM	600.9	319.0	1.0	24.3
6:32:13 PM	600.9	319.0	1.0	23.9
6:32:14 PM	600.9	318.0	1.0	23.7
6:32:15 PM	600.9	319.0	1.0	24.3
6:32:16 PM	600.9	318.0	1.0	25.4
6:32:17 PM	600.9	318.0	1.0	25.5
6:32:18 PM	600.9	318.0	1.0	25.9
6:32:19 PM	600.9	318.0	1.0	25.9
6:32:20 PM	600.9	318.0	1.0	25.6
6:32:21 PM	600.9	319.0	1.0	25.2
6:32:22 PM	600.9	318.0	1.0	24.7
6:32:23 PM	600.9	318.0	1.0	24.7
6:32:24 PM	600.9	319.0	1.0	25.0
6:32:24 PM	600.9	319.0	1.0	25.8
6:32:25 PM	600.9	318.0	1.0	26.2
6:32:26 PM	600.9	318.0	1.0	26.3
6:32:27 PM	600.9	318.0	1.0	25.8
6:32:28 PM	600.9	318.0	1.0	25.8
6:32:29 PM	600.9	318.0	1.0	25.3
6:32:30 PM	600.9	319.0	1.0	24.8
6:32:31 PM	600.9	318.0	1.0	24.6
6:32:32 PM	600.9	318.0	1.0	25.2
6:32:33 PM	600.9	319.0	1.0	25.2
6:32:34 PM	601.0	318.0	1.0	25.1
6:32:35 PM	601.0	319.0	1.0	25.3
Averages ->	**600.9**	**319.0**	**1.0**	**26.9**
			Maximum ->	**30.7**

92 East Elm Street, Yarmouth, Maine, 04096 USA
www.yarmouthresearch.com

Yarmouth Research and Technology

Valve Description: Newco 4 inch Cl 300 Gate Valve

Cycle Number: 400 **Date** 10/23/2006

Time	Pressure (psig)	Temp. (deg. F)	Sampling Rate (l/m)	PPMv Reading
6:35:41 PM	599.8	320.0	1.0	21.2
6:35:42 PM	599.5	320.0	1.0	21.3
6:35:43 PM	599.0	320.0	1.0	20.9
6:35:44 PM	598.7	320.0	1.0	20.6
6:35:45 PM	598.4	320.0	1.0	20.4
6:35:46 PM	598.0	319.0	1.0	20.2
6:35:47 PM	597.7	319.0	1.0	20.1
6:35:48 PM	597.3	319.0	1.0	20.0
6:35:49 PM	596.9	319.0	1.0	20.3
6:35:50 PM	596.6	319.0	1.0	20.5
6:35:51 PM	596.3	319.0	1.0	21.2
6:35:52 PM	596.2	319.0	1.0	21.4
6:35:53 PM	596.1	319.0	1.0	21.4
6:35:54 PM	596.2	319.0	1.0	21.9
6:35:55 PM	596.1	319.0	1.0	22.0
6:35:56 PM	596.1	319.0	1.0	21.9
6:35:57 PM	596.1	319.0	1.0	23.1
6:35:58 PM	596.1	319.0	1.0	23.6
6:35:59 PM	596.1	319.0	1.0	24.0
6:36:00 PM	596.1	319.0	1.0	24.3
6:36:01 PM	596.1	319.0	1.0	24.4
6:36:02 PM	596.1	319.0	1.0	23.9
6:36:03 PM	596.1	319.0	1.0	23.9
6:36:04 PM	595.6	319.0	1.0	22.5
6:36:04 PM	596.1	319.0	1.0	22.4
6:36:05 PM	596.5	319.0	1.0	22.1
6:36:06 PM	596.8	319.0	1.0	22.3
6:36:07 PM	597.2	319.0	1.0	22.4
6:36:08 PM	597.4	319.0	1.0	22.6
6:36:09 PM	597.8	319.0	1.0	22.5
6:36:10 PM	598.1	319.0	1.0	23.0
6:36:11 PM	598.4	319.0	1.0	24.7
6:36:12 PM	598.7	319.0	1.0	27.2
6:36:13 PM	599.1	319.0	1.0	32.9
6:36:14 PM	599.4	319.0	1.0	35.0
6:36:15 PM	599.7	319.0	1.0	33.5
6:36:16 PM	600.1	319.0	1.0	32.0
6:36:17 PM	600.4	319.0	1.0	29.7
6:36:18 PM	600.8	319.0	1.0	28.8
6:36:19 PM	601.1	319.0	1.0	29.0
6:36:20 PM	601.4	319.0	1.0	27.8
6:36:21 PM	601.8	319.0	1.0	25.7
6:36:22 PM	602.1	319.0	1.0	25.1
6:36:23 PM	602.6	319.0	1.0	24.7
6:36:24 PM	602.9	320.0	1.0	24.4
6:36:25 PM	603.2	320.0	1.0	24.0
6:36:26 PM	603.7	320.0	1.0	23.7
6:36:27 PM	604.0	320.0	1.0	23.5
6:36:28 PM	604.4	320.0	1.0	23.8
6:36:29 PM	604.6	320.0	1.0	23.5
6:36:30 PM	604.7	320.0	1.0	23.1
6:36:31 PM	604.7	320.0	1.0	23.1
6:36:32 PM	604.8	320.0	1.0	23.6
6:36:33 PM	604.8	320.0	1.0	24.9
6:36:34 PM	604.8	320.0	1.0	25.1
6:36:35 PM	604.8	320.0	1.0	25.1
6:36:36 PM	604.9	320.0	1.0	25.4
6:36:37 PM	604.9	320.0	1.0	25.1
6:36:38 PM	604.9	320.0	1.0	23.7
6:36:39 PM	604.9	320.0	1.0	23.5
Averages ->	**599.7**	**319.4**	**1.0**	**24.1**
			Maximum ->	**35.0**

Yarmouth Research and Technology

Valve Description: Newco 4 inch Cl 300 Gate Valve

Cycle Number: 500 **Date** 10/24/2006

Time	Pressure (psig)	Temp. (deg. F)	Sampling Rate (l/m)	PPMv Reading
8:05:37 AM	598.0	92.0	1.0	16.5
8:05:38 AM	598.0	93.0	1.0	15.9
8:05:39 AM	598.0	92.0	1.0	15.7
8:05:40 AM	598.0	92.0	1.0	15.7
8:05:41 AM	598.0	92.0	1.0	15.5
8:05:42 AM	598.0	92.0	1.0	15.2
8:05:43 AM	598.0	93.0	1.0	14.9
8:05:44 AM	598.0	93.0	1.0	14.8
8:05:45 AM	598.0	93.0	1.0	14.7
8:05:46 AM	598.0	93.0	1.0	14.5
8:05:47 AM	598.0	92.0	1.0	14.4
8:05:48 AM	597.9	92.0	1.0	14.1
8:05:49 AM	598.0	92.0	1.0	13.9
8:05:50 AM	597.9	92.0	1.0	13.8
8:05:51 AM	598.0	92.0	1.0	13.6
8:05:52 AM	598.0	93.0	1.0	13.6
8:05:53 AM	598.0	92.0	1.0	13.5
8:05:54 AM	598.0	93.0	1.0	13.5
8:05:55 AM	598.0	93.0	1.0	13.3
8:05:56 AM	597.9	92.0	1.0	13.2
8:05:57 AM	597.9	92.0	1.0	13.1
8:05:58 AM	597.9	92.0	1.0	13.0
8:05:59 AM	598.0	92.0	1.0	13.3
8:06:00 AM	598.0	93.0	1.0	13.8
8:06:01 AM	597.9	92.0	1.0	13.7
8:06:02 AM	598.0	92.0	1.0	13.7
8:06:03 AM	598.0	92.0	1.0	13.5
8:06:04 AM	597.9	92.0	1.0	13.3
8:06:05 AM	597.9	92.0	1.0	13.3
8:06:06 AM	598.0	92.0	1.0	13.5
8:06:07 AM	597.9	92.0	1.0	13.2
8:06:08 AM	597.9	92.0	1.0	13.3
8:06:09 AM	597.9	92.0	1.0	13.3
8:06:10 AM	597.9	92.0	1.0	13.1
8:06:11 AM	597.9	92.0	1.0	12.8
8:06:12 AM	597.9	92.0	1.0	12.9
8:06:13 AM	597.9	92.0	1.0	12.9
8:06:14 AM	597.9	92.0	1.0	12.9
8:06:15 AM	597.9	92.0	1.0	13.0
8:06:16 AM	597.9	92.0	1.0	13.1
8:06:17 AM	597.8	92.0	1.0	12.7
8:06:18 AM	597.8	92.0	1.0	12.7
8:06:19 AM	597.9	92.0	1.0	12.7
8:06:20 AM	597.9	92.0	1.0	12.5
8:06:21 AM	598.0	92.0	1.0	12.5
8:06:22 AM	597.8	92.0	1.0	12.5
8:06:23 AM	597.9	93.0	1.0	12.3
8:06:24 AM	597.9	92.0	1.0	12.4
8:06:25 AM	597.9	92.0	1.0	12.3
8:06:26 AM	597.9	92.0	1.0	12.4
8:06:27 AM	597.9	92.0	1.0	12.3
8:06:28 AM	597.8	92.0	1.0	12.3
8:06:29 AM	597.8	92.0	1.0	12.4
8:06:30 AM	597.8	92.0	1.0	12.5
8:06:30 AM	597.9	92.0	1.0	12.3
8:06:31 AM	597.8	92.0	1.0	12.4
8:06:32 AM	597.8	92.0	1.0	12.5
8:06:33 AM	597.9	92.0	1.0	12.5
8:06:34 AM	597.8	92.0	1.0	12.4
8:06:35 AM	597.8	92.0	1.0	12.4
Averages ->	**597.9**	**92.2**	**1.0**	**13.4**
			Maximum ->	**16.5**

92 East Elm Street, Yarmouth, Maine, 04096 USA
www.yarmouthresearch.com

Yarmouth Research and Technology

Valve Description: Newco 4 inch Cl 300 Gate Valve

Cycle Number: 500 **Date** 10/24/2006

Time	Pressure (psig)	Temp. (deg. F)	Sampling Rate (l/m)	PPMv Reading
8:07:41 AM	603.6	92.0	1.0	13.7
8:07:42 AM	598.3	92.0	1.0	13.9
8:07:43 AM	598.3	92.0	1.0	13.9
8:07:44 AM	603.6	93.0	1.0	14.5
8:07:45 AM	603.3	92.0	1.0	15.0
8:07:46 AM	602.9	92.0	1.0	15.4
8:07:47 AM	602.6	93.0	1.0	15.3
8:07:48 AM	602.3	92.0	1.0	15.1
8:07:49 AM	602.1	90.0	1.0	15.1
8:07:50 AM	601.8	92.0	1.0	15.6
8:07:51 AM	601.4	92.0	1.0	16.5
8:07:52 AM	601.3	93.0	1.0	17.2
8:07:53 AM	600.7	93.0	1.0	17.4
8:07:54 AM	600.7	92.0	1.0	17.2
8:07:55 AM	600.3	92.0	1.0	16.9
8:07:56 AM	600.1	92.0	1.0	16.7
8:07:57 AM	599.9	93.0	1.0	16.5
8:07:58 AM	599.6	92.0	1.0	16.5
8:07:59 AM	599.3	92.0	1.0	16.6
8:08:00 AM	599.1	92.0	1.0	16.5
8:08:01 AM	598.9	92.0	1.0	16.2
8:08:02 AM	598.5	93.0	1.0	16.1
8:08:03 AM	598.3	96.0	1.0	16.2
8:08:04 AM	598.1	93.0	1.0	16.4
8:08:05 AM	597.8	92.0	1.0	16.3
8:08:06 AM	597.5	92.0	1.0	16.4
8:08:07 AM	597.3	92.0	1.0	16.7
8:08:08 AM	597.1	93.0	1.0	17.2
8:08:09 AM	596.9	93.0	1.0	18.1
8:08:10 AM	597.0	93.0	1.0	18.5
8:08:11 AM	597.0	93.0	1.0	18.9
8:08:12 AM	597.0	93.0	1.0	19.0
8:08:13 AM	597.0	93.0	1.0	19.6
8:08:14 AM	597.1	93.0	1.0	20.2
8:08:15 AM	597.1	92.0	1.0	20.4
8:08:16 AM	597.1	93.0	1.0	20.2
8:08:17 AM	597.2	93.0	1.0	19.9
8:08:18 AM	597.2	93.0	1.0	19.5
8:08:19 AM	597.2	93.0	1.0	19.1
8:08:20 AM	597.2	93.0	1.0	19.1
8:08:21 AM	597.3	93.0	1.0	18.8
8:08:22 AM	597.6	93.0	1.0	18.3
8:08:23 AM	598.0	93.0	1.0	18.2
8:08:24 AM	598.2	93.0	1.0	18.3
8:08:25 AM	598.4	93.0	1.0	17.9
8:08:26 AM	598.8	93.0	1.0	17.6
8:08:27 AM	599.1	92.0	1.0	17.8
8:08:28 AM	599.3	93.0	1.0	18.1
8:08:29 AM	599.6	93.0	1.0	18.5
8:08:30 AM	599.9	93.0	1.0	18.4
8:08:31 AM	600.1	93.0	1.0	18.1
8:08:32 AM	600.4	92.0	1.0	18.1
8:08:33 AM	600.6	93.0	1.0	18.0
8:08:34 AM	600.9	92.0	1.0	17.5
8:08:35 AM	601.2	93.0	1.0	17.1
8:08:36 AM	601.9	93.0	1.0	17.2
8:08:37 AM	601.7	93.0	1.0	17.1
8:08:38 AM	601.9	93.0	1.0	16.6
8:08:39 AM	602.2	93.0	1.0	16.2
8:08:40 AM	602.4	93.0	1.0	15.9
Averages ->	**599.5**	**92.6**	**1.0**	**17.2**
			Maximum ->	**20.4**

92 East Elm Street, Yarmouth, Maine, 04096 USA
www.yarmouthresearch.com

Yarmouth Research and Technology

Valve Description: Newco 4 inch Cl 300 Gate Valve

Cycle Number: 600 **Date** 10/24/2006

Time	Pressure (psig)	Temp. (deg. F)	Sampling Rate (l/m)	PPMv Reading
10:17:59 AM	608.4	318.0	1.0	48.7
10:18:00 AM	608.4	318.0	1.0	47.5
10:18:01 AM	608.3	318.0	1.0	48.8
10:18:02 AM	608.4	318.0	1.0	47.7
10:18:03 AM	608.4	318.0	1.0	49.2
10:18:04 AM	608.3	318.0	1.0	46.0
10:18:05 AM	608.4	318.0	1.0	49.2
10:18:06 AM	608.4	318.0	1.0	45.4
10:18:07 AM	608.4	318.0	1.0	47.7
10:18:08 AM	608.4	318.0	1.0	46.9
10:18:09 AM	608.4	318.0	1.0	45.5
10:18:10 AM	608.4	318.0	1.0	44.4
10:18:11 AM	608.4	318.0	1.0	50.5
10:18:12 AM	608.4	318.0	1.0	44.7
10:18:13 AM	608.4	318.0	1.0	46.6
10:18:14 AM	608.4	318.0	1.0	46.6
10:18:15 AM	608.4	318.0	1.0	44.5
10:18:16 AM	608.4	318.0	1.0	43.2
10:18:17 AM	608.4	318.0	1.0	43.2
10:18:18 AM	608.4	318.0	1.0	41.9
10:18:19 AM	608.4	318.0	1.0	43.5
10:18:20 AM	608.4	318.0	1.0	45.6
10:18:21 AM	608.4	318.0	1.0	45.4
10:18:22 AM	608.4	318.0	1.0	45.0
10:18:23 AM	608.4	318.0	1.0	45.3
10:18:24 AM	608.4	318.0	1.0	45.3
10:18:25 AM	608.4	318.0	1.0	45.5
10:18:26 AM	608.4	318.0	1.0	45.8
10:18:27 AM	608.5	318.0	1.0	45.9
10:18:28 AM	608.4	318.0	1.0	45.9
10:18:29 AM	608.5	318.0	1.0	45.7
10:18:30 AM	608.5	318.0	1.0	45.3
10:18:31 AM	608.5	318.0	1.0	45.2
10:18:32 AM	608.5	318.0	1.0	45.4
10:18:33 AM	608.5	319.0	1.0	45.5
10:18:34 AM	608.4	318.0	1.0	46.1
10:18:35 AM	608.4	318.0	1.0	46.3
10:18:36 AM	608.4	318.0	1.0	46.5
10:18:37 AM	608.5	318.0	1.0	46.3
10:18:38 AM	608.5	318.0	1.0	46.2
10:18:39 AM	608.5	318.0	1.0	46.7
10:18:40 AM	608.4	318.0	1.0	46.6
10:18:41 AM	608.5	318.0	1.0	46.4
10:18:42 AM	608.5	319.0	1.0	46.3
10:18:43 AM	608.5	319.0	1.0	45.9
10:18:44 AM	608.5	318.0	1.0	45.4
10:18:45 AM	608.5	318.0	1.0	45.0
10:18:46 AM	608.5	318.0	1.0	44.7
10:18:47 AM	608.5	318.0	1.0	44.7
10:18:48 AM	608.5	318.0	1.0	44.7
10:18:49 AM	608.5	318.0	1.0	44.4
10:18:50 AM	608.5	318.0	1.0	44.3
10:18:51 AM	608.5	318.0	1.0	43.6
10:18:52 AM	608.6	318.0	1.0	42.9
10:18:53 AM	608.5	318.0	1.0	42.2
10:18:54 AM	608.2	318.0	1.0	42.3
10:18:55 AM	607.9	319.0	1.0	42.3
10:18:56 AM	607.6	318.0	1.0	42.7
10:18:56 AM	607.2	319.0	1.0	43.8
10:18:57 AM	606.8	318.0	1.0	44.1
Averages ->	**608.4**	**318.1**	**1.0**	**45.5**
			Maximum ->	**50.5**

Yarmouth Research and Technology

Valve Description: Newco 4 inch Cl 300 Gate Valve

Cycle Number: 600 **Date** 10/24/2006

Time	Pressure (psig)	Temp. (deg. F)	Sampling Rate (l/m)	PPMv Reading
10:19:28 AM	600.5	319.0	1.0	57.3
10:19:29 AM	600.5	319.0	1.0	58.7
10:19:30 AM	588.1	319.0	1.0	58.7
10:19:31 AM	600.8	319.0	1.0	58.6
10:19:32 AM	601.1	319.0	1.0	58.6
10:19:33 AM	601.5	319.0	1.0	58.4
10:19:34 AM	601.8	318.0	1.0	59.7
10:19:35 AM	602.1	319.0	1.0	60.2
10:19:36 AM	602.4	318.0	1.0	61.0
10:19:36 AM	602.8	318.0	1.0	60.2
10:19:37 AM	603.1	319.0	1.0	58.7
10:19:38 AM	603.5	319.0	1.0	57.8
10:19:39 AM	603.7	319.0	1.0	57.2
10:19:40 AM	604.1	318.0	1.0	56.6
10:19:41 AM	604.5	318.0	1.0	55.8
10:19:42 AM	604.8	319.0	1.0	55.2
10:19:43 AM	605.1	318.0	1.0	54.0
10:19:44 AM	605.5	319.0	1.0	53.0
10:19:45 AM	605.8	318.0	1.0	52.0
10:19:46 AM	606.1	318.0	1.0	51.1
10:19:47 AM	606.5	318.0	1.0	50.6
10:19:48 AM	606.9	319.0	1.0	50.6
10:19:49 AM	607.3	319.0	1.0	50.8
10:19:50 AM	607.7	319.0	1.0	51.0
10:19:51 AM	608.1	319.0	1.0	50.8
10:19:52 AM	608.5	318.0	1.0	50.7
10:19:53 AM	608.9	319.0	1.0	50.2
10:19:54 AM	609.2	318.0	1.0	50.2
10:19:55 AM	609.3	319.0	1.0	49.7
10:19:56 AM	609.3	318.0	1.0	49.5
10:19:57 AM	609.4	318.0	1.0	49.5
10:19:58 AM	609.5	319.0	1.0	49.2
10:19:59 AM	609.5	318.0	1.0	48.6
10:20:00 AM	609.5	318.0	1.0	48.6
10:20:01 AM	609.5	319.0	1.0	48.6
10:20:02 AM	609.5	319.0	1.0	48.8
10:20:03 AM	609.5	319.0	1.0	47.4
10:20:04 AM	609.6	319.0	1.0	46.1
10:20:05 AM	609.6	319.0	1.0	45.3
10:20:06 AM	609.6	319.0	1.0	45.1
10:20:07 AM	609.6	319.0	1.0	44.5
10:20:08 AM	609.6	319.0	1.0	43.9
10:20:09 AM	609.3	319.0	1.0	43.8
10:20:10 AM	608.9	319.0	1.0	43.5
10:20:11 AM	608.5	319.0	1.0	42.7
10:20:12 AM	608.2	319.0	1.0	42.3
10:20:13 AM	607.9	319.0	1.0	42.3
10:20:14 AM	607.6	319.0	1.0	41.9
10:20:15 AM	607.2	319.0	1.0	41.8
10:20:16 AM	606.8	319.0	1.0	42.1
10:20:17 AM	606.5	319.0	1.0	42.3
10:20:18 AM	606.1	319.0	1.0	42.6
10:20:19 AM	605.7	319.0	1.0	43.0
10:20:20 AM	605.4	318.0	1.0	43.9
10:20:21 AM	605.0	319.0	1.0	44.3
10:20:22 AM	604.7	319.0	1.0	44.5
10:20:23 AM	604.4	319.0	1.0	44.0
10:20:24 AM	604.0	319.0	1.0	43.3
10:20:25 AM	603.6	319.0	1.0	42.7
10:20:26 AM	603.3	319.0	1.0	42.4
Averages ->	**606.0**	**318.7**	**1.0**	**49.8**
			Maximum ->	**61.0**

92 East Elm Street, Yarmouth, Maine, 04096 USA
www.yarmouthresearch.com

Yarmouth Research and Technology

Valve Description: Newco 4 inch Cl 300 Gate Valve

Cycle Number: 700 **Date** 10/24/2006

Time	Pressure (psig)	Temp. (deg. F)	Sampling Rate (l/m)	PPMv Reading
12:31:18 PM	601.4	494.0	1.0	38.7
12:31:19 PM	601.4	494.0	1.0	38.3
12:31:20 PM	601.4	494.0	1.0	38.2
12:31:21 PM	601.4	494.0	1.0	37.8
12:31:22 PM	601.4	494.0	1.0	37.6
12:31:23 PM	601.4	494.0	1.0	37.5
12:31:24 PM	601.4	494.0	1.0	38.0
12:31:25 PM	601.4	494.0	1.0	38.0
12:31:26 PM	601.4	494.0	1.0	38.2
12:31:27 PM	601.5	494.0	1.0	38.0
12:31:27 PM	601.4	494.0	1.0	37.9
12:31:28 PM	601.4	494.0	1.0	37.9
12:31:29 PM	601.4	494.0	1.0	37.7
12:31:30 PM	601.5	494.0	1.0	38.1
12:31:31 PM	601.5	494.0	1.0	38.2
12:31:32 PM	601.5	494.0	1.0	37.8
12:31:33 PM	601.5	494.0	1.0	37.8
12:31:34 PM	601.5	494.0	1.0	37.8
12:31:35 PM	601.5	494.0	1.0	37.8
12:31:36 PM	601.5	494.0	1.0	37.9
12:31:37 PM	601.5	494.0	1.0	37.9
12:31:38 PM	601.6	494.0	1.0	37.7
12:31:39 PM	601.5	494.0	1.0	37.0
12:31:40 PM	601.5	494.0	1.0	36.9
12:31:41 PM	601.6	494.0	1.0	37.3
12:31:42 PM	601.6	494.0	1.0	37.7
12:31:43 PM	601.6	494.0	1.0	37.9
12:31:44 PM	601.6	494.0	1.0	37.5
12:31:45 PM	601.6	494.0	1.0	37.8
12:31:46 PM	601.6	494.0	1.0	37.6
12:31:47 PM	601.6	494.0	1.0	37.6
12:31:48 PM	601.6	494.0	1.0	37.4
12:31:49 PM	601.7	494.0	1.0	37.5
12:31:50 PM	601.7	494.0	1.0	37.6
12:31:51 PM	601.7	494.0	1.0	37.7
12:31:52 PM	601.7	494.0	1.0	37.8
12:31:53 PM	601.7	494.0	1.0	38.0
12:31:54 PM	601.6	494.0	1.0	37.8
12:31:55 PM	601.7	494.0	1.0	37.7
12:31:56 PM	601.7	494.0	1.0	37.7
12:31:57 PM	601.7	494.0	1.0	37.5
12:31:58 PM	601.7	494.0	1.0	37.9
12:31:59 PM	601.7	494.0	1.0	38.0
12:32:00 PM	601.8	494.0	1.0	38.0
12:32:01 PM	601.8	494.0	1.0	38.0
12:32:02 PM	601.8	494.0	1.0	37.9
12:32:03 PM	601.8	494.0	1.0	37.9
12:32:04 PM	601.8	494.0	1.0	38.1
12:32:05 PM	601.8	494.0	1.0	38.3
12:32:06 PM	601.8	494.0	1.0	38.3
12:32:07 PM	601.9	494.0	1.0	38.4
12:32:08 PM	601.9	494.0	1.0	38.2
12:32:09 PM	601.9	494.0	1.0	38.1
12:32:10 PM	601.8	495.0	1.0	38.1
12:32:11 PM	601.9	494.0	1.0	38.0
12:32:12 PM	601.9	494.0	1.0	37.9
12:32:13 PM	601.9	495.0	1.0	38.2
12:32:14 PM	601.8	494.0	1.0	38.3
12:32:15 PM	601.9	494.0	1.0	38.1
12:32:16 PM	601.9	495.0	1.0	38.0
Averages ->	**601.6**	**494.1**	**1.0**	**37.9**
			Maximum ->	**38.7**

92 East Elm Street, Yarmouth, Maine, 04096 USA
www.yarmouthresearch.com